BATTELLE

Report To

National Aeronautics and Space Administration

Marshall Space Flight Center Huntsville, Alabama

VOLUME I

EXECUTIVE SUMMARY
OF FINAL REPORT

on

EVALUATION OF THE SPACE DISPOSAL OF DEFENSE NUCLEAR WASTE—PHASE II

to

NATIONAL AERONAUTICS AND
SPACE ADMINISTRATION
MARSHALL SPACE FLIGHT CENTER
(Contract Number NAS8-32391)
DPD No. 557, DR No. MA-04

January 31, 1979

(NASA-CR-161161) EVALUATION OF THE SPACE DISPOSAL OF DEFENSE NUCLEAR WASTE, PHASE 2. VOLUME 1: EXECUTIVE SUMMARY Final Report, Jul. 1978 - Jan. 1979 (Battelle Columbus Labs., Ohio.) 71 p

N79-74672

Unclas
G0/73 14354

BATTELLE

Columbus Laboratories
Columbus, Ohio 43201

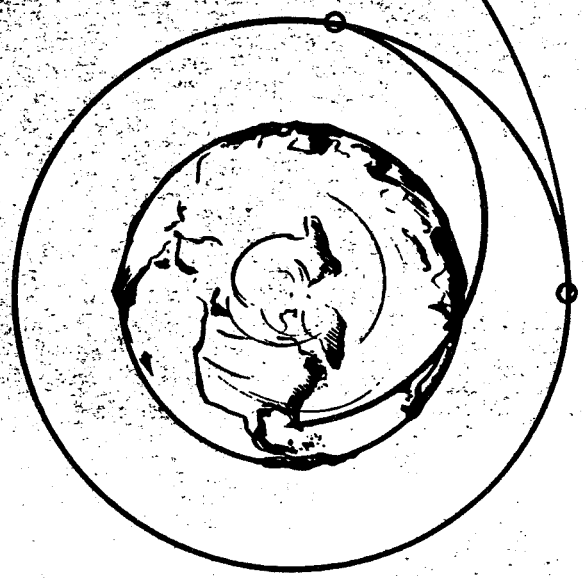

VOLUME I
EXECUTIVE SUMMARY
OF FINAL REPORT

ON

EVALUATION OF THE SPACE DISPOSAL OF DEFENSE NUCLEAR WASTE--PHASE II

TO

NATIONAL AERONAUTICS AND
SPACE ADMINISTRATION
MARSHALL SPACE FLIGHT CENTER
(Contract Number NAS8-32391)
DPD No. 557, DR No. MA-04

January 31, 1979

D. S. Edgecombe

D. S. Edgecombe, Study Leader
Battelle-Columbus Laboratories
Columbus, Ohio

C. C. Priest

C. C. Priest, COR
NASA/Marshall Space Flight Center
Huntsville, Alabama

BATTELLE
Columbus Laboratories
505 King Avenue
Columbus, Ohio 43201

FOREWORD

The study summarized in this three-volume report is a preliminary examination of the feasibility and preferred approaches for disposal of selected high-level defense nuclear wastes in space. The study is a continuation of previous NASA and NASA-sponsored study activities, but differs from these previous studies in the emphasis on defense wastes (a study ground rule specified jointly by the DOE and NASA). The study is an integral part of the ongoing NASA/DOE program for evaluation of nuclear waste disposal in space, and was conducted in parallel with efforts at NASA Marshall Space Flight Center; Science Applications, Inc. (Schaumburg, Illinois); and the Jet Propulsion Laboratory. The research effort reported here was performed by Battelle-Columbus Laboratories under NASA Contract NAS8-32391 from February 1978 through January 1979. The major objective of the study was to conduct preliminary analyses of the nature and containment of defense nuclear waste, the safety of the space disposal approach, the environmental impact of selected credible accidents, and various program planning aspects.

The study made considerable use of existing documentation and direct visits to defense waste repositories. Despite these efforts, considerable uncertainty remains regarding the composition and possible concentration processes for defense waste. Similar data needs exist regarding Space Shuttle reliability and other systems safety. The development of such data will need to be a primary concern of a proposed joint NASA/DOE working group. Despite these needs, however, it is believed that the preliminary systems descriptions and safety and environmental impact analyses described in this report have scoped the fundamentals and likely approaches for space disposal of nuclear waste. Additional, more detailed studies are expected to build upon the data base reported here.

The information developed during the study period is contained in this three-volume final report. The title of each volume is listed below.

Volume I	Executive Summary
Volume II	Technical Report
Volume III	Supporting Research and Technologies Licensing and Flight Test Requirements

Inquiries regarding this study should be addressed to:

C. C. (Pete) Priest, COR
NASA/Marshall Space Flight Center
Attention: PS04
Huntsville, Alabama 35812
Telephone: (205) 453-2796

Donald S. Edgecombe, Study Leader
Battelle-Columbus Laboratories
505 King Avenue
Columbus, Ohio 43201
Telephone: (614) 424-5087

ACKNOWLEDGMENTS

The principal authors, D. S. Edgecombe, E. E. Rice, R. J. Conlon, N. E. Miller, and K. R. Yates, acknowledge the generous assistance of the following individuals who provided significant contributions to the technical content of this report:

M. E. Balmert
S. G. Bloom
A. A. Boiarski
R. W. Earhart
K. D. Kok
M. B. Kuhner
W. E. Martin
R. F. Porter
E. A. Ramlet
A. E. Tischer
A. E. Weller
G. R. Whitacre

Acknowledgment is also made to the guidance by the NASA/MSFC study monitors, R. E. Austin and C. C. Priest, and by various members of the MSFC staff, particularly R. E. Burns, W. E. Galloway, and R. F. Nixon.

TABLE OF CONTENTS

Page

FOREWORD i

ACKNOWLEDGMENTS. ii

1.0 INTRODUCTION. 1

2.0 STUDY OBJECTIVES. 1

3.0 RELATIONSHIP TO OTHER NASA AND DOE EFFORTS. 2

4.0 METHOD OF APPROACH AND PRINCIPAL ASSUMPTIONS. 2

5.0 BASIC DATA GENERATED AND SIGNIFICANT RESULTS. 5
- 5.1 Baseline Concept Definition and Options Summary. 6
  - 5.1.1 Concept Options. 6
  - 5.1.2 Overall Baseline Mission Profile 6
    - 5.1.2.1 Nuclear Waste Payload Fabrication. 7
    - 5.1.2.2 Nuclear Waste Ground Transport 9
    - 5.1.2.3 Payload Preparation at Launch Site 9
    - 5.1.2.4 Prelaunch Activities 9
    - 5.1.2.5 Booster Operations 10
    - 5.1.2.6 Upper Stage Operations 10
- 5.2 Characterization of Defense High-Level Waste Payloads. . 11
  - 5.2.1 Defense Nuclear Waste Sources and Character. . . . 11
  - 5.2.2 Waste Compositions for Space Disposal. 14
  - 5.2.3 Waste Forms for Space Disposal 14
  - 5.2.4 Containerization Systems 14
    - 5.2.4.1 Shielding Analysis 16
    - 5.2.4.2 Thermal Analysis 18
    - 5.2.4.3 Accident Response Analysis 19
    - 5.2.4.4 Dose Calculations. 23
- 5.3 Mission Analysis 24
- 5.4 Safety Assessment. 27
  - 5.4.1 Major Accident Environment Characterization. . . . 28
    - 5.4.1.1 Space Shuttle Explosion and Fire 28
    - 5.4.1.2 Reentry of Container With/Without Reentry Protection 35
    - 5.4.1.3 Payload Entry into Deep Ocean. 35
  - 5.4.2 Preliminary Hazard Analysis. 35
    - 5.4.2.1 Mission Phase Definition 36
    - 5.4.2.2 Failure Probability Data 36
    - 5.4.2.3 Fault Trees. 37
  - 5.4.3 System Modification Requirements 39
- 5.5 Environmental Impact Assessment. 39
  - 5.5.1 On- or Near-Pad Catastrophic Space Shuttle Failure with Release of Defense Nuclear Waste Material 40

TABLE OF CONTENTS
(Continued)

Page

5.5.2 Reentry and Burnup of Defense Nuclear Waste Payload. 43
5.6 Licensing Requirements 46
5.6.1 Waste Treatment and Payload Fabrication Facilities 48
5.6.2 Overland Shipment. 48
5.6.3 Launch Site Facilities and Operations. 49
5.6.4 Major Policy Questions 50

5.7 Flight Test Requirements 51
5.7.1 Ground-Based Tests 51
5.7.2 Flight Tests of Selected Systems 52
5.7.3 All-Up Test Flight 52
5.7.4 Test Schedule. 53
5.8 Conclusions. 54

6.0 STUDY LIMITATIONS 56

7.0 IMPLICATIONS FOR RESEARCH AND TECHNOLOGY. 57
7.1 Waste Concentration Processes 57
7.2 Waste Form Thermal Response 58
7.3 Remote Automated Rendezvous and Docking 58
7.4 Long-Term Behavior of Materials in a Deep Space Environment. 58

8.0 SUGGESTED ADDITIONAL EFFORT 59

APPENDICES
A. Acronyms and Abbreviations 60
B. Metric/English Conversion Factors. 62

LIST OF FIGURES

Figure 1. Study Flow Diagram. 3

Figure 2. Major Options for Space Disposal of Nuclear Waste . . 7

Figure 3. Ground and Space Operation Profiles for Baseline Space Disposal Mission 8

Figure 4. Artist's Concept of a Loaded Reentry/Docking Assembly 9

Figure 5. Total Number of Paylaods as a Function of Defense Waste Concentration Factor (WCF). 15

LIST OF FIGURES
(Continued)

		Page
Figure 6.	Shield Thickness Requirements as a Function of Waste Concentration Factor for Hanford Waste.	17
Figure 7.	Baseline Shielded Container Design for Hanford Waste (WCF = 27).	17
Figure 8.	Radiant Heat Flux vs Time for Launch Pad Fires. . . .	21
Figure 9.	Thermal Response of Gamma Radiation Shielded Container to Solid Propellant Fragment Fire	22
Figure 10.	Thermal Response of Rotating Unprotected Waste Container During Shallow Unplanned Reentry.	24
Figure 11.	Definition of Angle Error Parameters.	25
Figure 12.	Effect of OTV Impulse Errors from Initial 333-km (180-n.mi.) Circular Orbit	26
Figure 13.	Schematic of Modeled Fireball Development	29
Figure 14.	Thermal Environment from Space Shuttle Hydrogen/Oxygen Fireball.	29
Figure 15.	Fragment Model for Space Shuttle Solid Propellant Fire	30
Figure 16.	Split Motor Model for Space Shuttle Solid Propellant Fire	31
Figure 17.	Maximum Heat Flux as a Function of Time (Fragment Fire Model)	31
Figure 18.	Maximum Heat Flux as a Function of Distance (Split Motor Fire Model)	32
Figure 19.	Overpressures as a Result of Space Shuttle ET Blast Wave	33
Figure 20.	Fragment Velocity Distribution Assuming 20% Yield for Space Shuttle Fragment Environment.	34
Figure 21.	Distribution of Ocean Depth (Pressure) for a 38° Inclination Space Disposal Orbit (1st Orbital Pass) .	36
Figure 22.	Phase 3 Fault Tree (Ignition to Clearing of Tower). .	38

LIST OF FIGURES
(Continued)

Page

Figure 23. Individual Dose Commitments for Release of Savannah River Radioactive Waste as a Result of On- or Near-Pad Space Shuttle Catastrophic Accident 41

Figure 24. Interaction of Licensing with Other Major Decision Areas. 47

Figure 25. Expected Test Schedule. 53

LIST OF TABLES

Table 1. Current Volumetric Defense HLW Inventories. 12

Table 2. Characteristics of Defense HLW for Terrestrial Disposal 13

Table 3. Desired High and Desired Low Mass Inventories of Defense HLW Proposed for Space Disposal. 14

Table 4. Baseline High-Level Defense Waste Payload Characteristics 16

Table 5. Baseline Container and Shielding Masses, Assuming Hanford Waste. 18

Table 6. Payload Temperature Distributions for the Hanford Defense Waste as a Function of Waste Concentration Factor 19

Table 7. Definition of Mission Phases. 37

Table 8 Population Dose Commitments (70-Year) for Different Conditions as a Result of a 55-kg Release (1%) of Waste Payload, During On-Pad Space Shuttle Accident . . 42

Table 9. Ranges of Expected Health Effects for On-Pad Shuttle Failure with Release of Defense Nuclear Waste Material. 43

Table 10. Summary of World Population Doses for Total Burnup of Defense Waste Payloads. 45

Table 11. Ranges of Expected Health Effects for Payload Reentry Burnup. 46

1.0 INTRODUCTION

This volume provides a brief summary of the work performed during the 1978 Battelle study of space disposal of defense nuclear waste. This volume contains a brief summary of the following: study objectives, approach, assumptions and limitations; the relationship to nuclear waste disposal in space to other NASA and DOE efforts; the basic technical data and results derived from the study (contained in detail in Volume II); research and technology, licensing and development testing requirements (contained in detail in Volume III); implications for research and technology; and finally, suggested additional effort.

Appendix A provides definitions of acronyms and abbreviations used in this volume. Appendix B gives metric to English unit conversion factors. More detailed reference lists are available in Volumes II and III.

2.0 STUDY OBJECTIVES

The overall objective for the 1978 Battelle-Columbus Laboratories study was to provide NASA with a basis for recommending a preferred nuclear waste disposal in space program by the end of Calendar Year 1978. To accomplish this overall study objective the study was broken down into four major study areas, each having its own objectives. These objectives are defined below for each study task:

- Task I Payload Packaging Concepts and Interface Definition (Payload Characterization)
  - Choose a preferred defense waste mix and form
  - Provide preliminary payload design concepts for containment systems.

- Task II Preliminary Safety Assessment
  - Identify and characterize the more severe payload environments that may result from mission accidents
  - Determine which identified accidents/malfunctions are most likely to result in the release of radioactive materials
  - Minimize hazards associated with proposed concept by suggesting system modifications.

- Task III Environmental Impact Assessment
  - Perform environmental impact assessment for major accidents
  - Identify how adverse environmental consequences might be mitigated.

- Task IV Mission and Other Supporting Analysis
  - Prepare and update a baseline Concept Definition Document
  - Perform specific mission analysis as requested by the sponsor
  - Organize all program parts into a logical development and assist in defining required program development activities.

3.0 RELATIONSHIP TO OTHER NASA AND DOE EFFORTS

This study, performed by Battelle-Columbus Laboratories, was sponsored and monitored by NASA/MSFC. NASA/MSFC is currently the lead government organization for technical studies on the disposal of nuclear waste in space. NASA/MSFC's in-house study effort has emphasized areas concerning the preliminary design of reentry systems, Orbit Transfer Vehicles (OTVs) and Solar Orbit Insertion Stages (SOISs). Other MSFC-sponsored work includes the long-term risk analysis associated with nuclear waste disposal in space. This research is being conducted by Science Applications, Inc., Schaumburg, Illinois (NASA Contract NAS8-33022, "Long-Term Risk Analysis Associated with Nuclear Waste Disposal in Space", January 1979). The Jet Propulsion Laboratory in Pasadena is providing assistance in the area of program planning for the space disposal option for NASA/Headquarters, Washington, D.C. ("Space Augmentation of Military High-Level Waste Disposal", Draft–September 1978).

Many of the concepts developed by various MSFC contractors during 1977 have been used in the current studies. NASA/MSFC has continued to improve and modify these designs and concepts. This study has employed MSFC-modified data for such items as the reentry protection system.

The Department of Energy (DOE) has followed the current study activities. Certain DOE laboratories have cooperatived in providing data on waste characteristics and radioactive material removal processes for defense wastes. A major DOE policy decision during the early part of the 1978 study activity directed NASA and its contractors to study defense waste only. This decision was prompted by current concern regarding the potential nuclear proliferation hazard from reprocessed commercially generated waste.

The DOE did sponsor an effort at Battelle (with concurrence by NASA) to characterize the issues related to space disposal of commercially generated nuclear waste. These data will appear in the Draft Environmental Impact Statement for the Management of Commercially Generated Radioactive Waste to be issued in 1979.

4.0 METHOD OF APPROACH AND PRINCIPAL ASSUMPTIONS

The study approach for the Evaluation of the Space Disposal of Defense Nuclear Waste is outlined in Figure 1. Major inputs, outputs, flow of tasks and interrelationships among the four major tasks are presented. The study consisted of four primary activities: nuclear waste payload characterization; a preliminary safety assessment; an environmental impact assessment; and various special studies covering mission definition, technical analysis and program-related assessments.

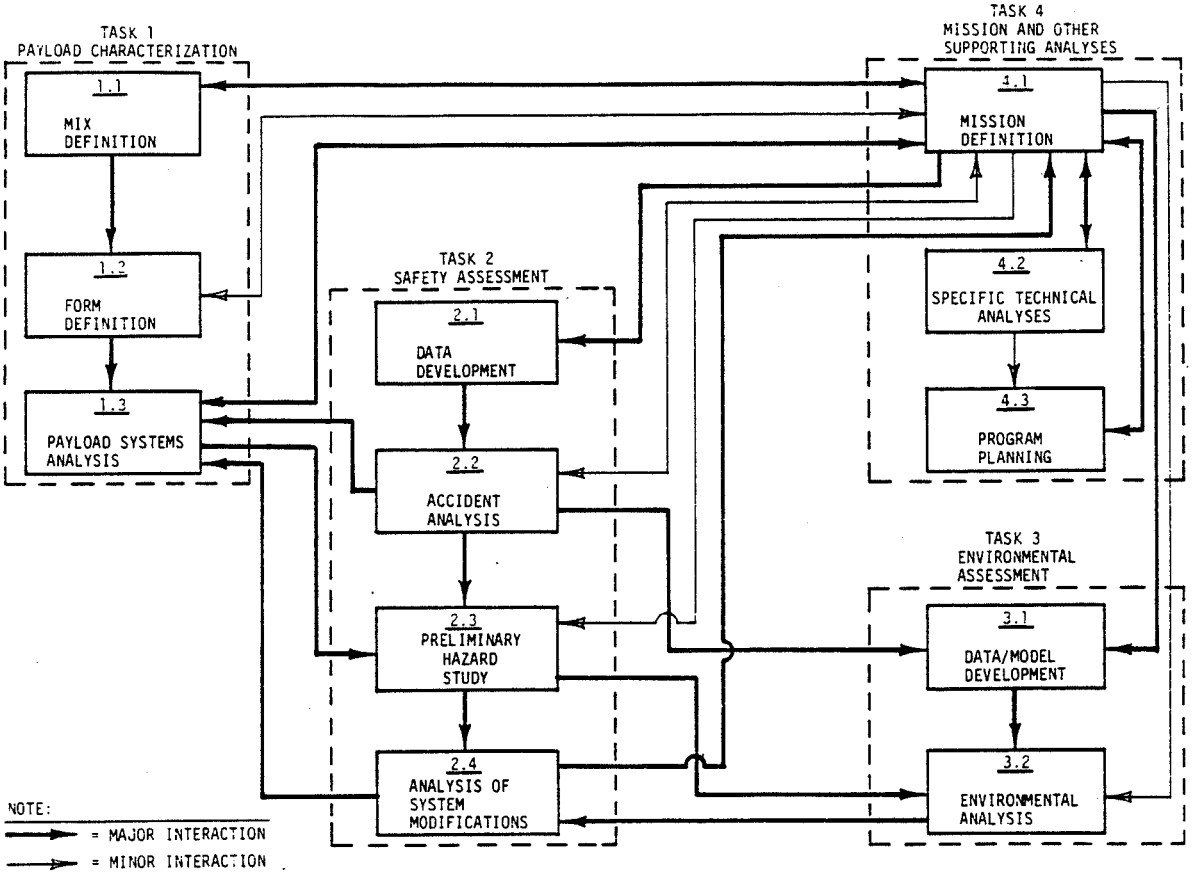

FIGURE 1. STUDY FLOW DIAGRAM

Because ot the number of technical areas to be considered and the strong interactions among the analyses of the various system elements, two methods for insuring concept control were instituted. First, a mission definition working group, consisting of NASA/MSFC and Battelle personnel, was organized and met periodically throughout the study. Second, a control document defining the current mission baseline and the set of primary alternatives was developed. This document, called the Concept Definition Document (CDD), was revised periodically with MSFC and Battelle concurrence as new data became available.

The principal study assumption, which strongly influenced most of the study activities, was that only defense waste from Hanford, Savannah River and Idaho would be analyzed. Since defense waste is not as well characterized as commercial waste, which was the original study baseline, a significant amount of the study activity had to be directed towards defining the quantities, characteristics and potential concentration processes for this waste.

Two other assumptions also played a major role in the study. First, maximum use was to be made of past studies and concurrent activities at NASA/MSFC and other contractors, as appropiate. Second, for the early years of the program, the Space Shuttle and its related elements were to be the space transportation system used for delivering nuclear waste payloads to low Earth orbit.

5.0 BASIC DATA GENERATED AND SIGNIFICANT RESULTS

This section summarizes the significant technical data generated as a part of the 1978 Battelle study of space disposal of defense nuclear waste (Volumes II and III of this final report). Sections 5.1 through 5.5 are summaries of detailed data found in Volume II; Sections 5.6 and 5.7 are condensations of information from Volume III.

Section 5.1 presents the current baseline and primary alternatives for the waste disposal concept, and is based on data contained in the Concept Definition Document developed as a part of this study. Section 5.2 contains material developed on the defense nuclear waste and its containment. The sources and characteristics of the waste are presented, and chemical processes to reduce the mass of the waste are postulated. The physical forms in which the waste could be transported are also identified. A preliminary container design, including shielding, cooling, and structural considerations, is developed. Because of the uncertainties in the eventual degree of achievable waste concentration, certain aspects of the container design are presented parametrically as a function of a waste concentration factor, and a baseline payload configuration was selected for accident response analyses. The survivability of the baseline payload configuration under various accident environments is characterized, and some preliminary recommendations are made.

Section 5.3 presents the results of two special analyses conducted as a part of this study. Both relate to special aspects of the system safety problem. The first analysis examines the stability and likely impact conditions for a nuclear waste payload ejected from the Space Shuttle Orbiter cargo bay both near the ground and during high speed flight. The second analysis considers the problem of an incomplete and/or misdirected OTV Earth escape injection burn.

Section 5.4 summarizes the material developed relative to safety. The first part of the section describes the physical environment resulting from three specific accidents: (1) an on- or near-pad Space Shuttle explosion and fire, (2) Earth atmosphere reentry of the protected (reentry system) and unprotected nuclear waste container, and (3) payload entry into deep ocean. The second portion of Section 5.4 presents the results of a preliminary fault tree analysis for the space disposal mission. The mission is defined in terms of twelve discrete phases, and a preliminary fault tree is presented for each phase. For each fault tree, the likely critical paths and potential workarounds or system modifications are described. These are then summarized as a set of possible modifications for the hardware elements (Shuttle, OTV, etc.) and for operational procedures.

Section 5.5 summarizes the results of a preliminary environmental impact assessment for accidents related to defense nuclear waste disposal in space. Two accidents were examined: (1) release of radionuclides into the troposphere following an on- or near-pad catastrophic failure of the Space Shuttle vehicle and (2) release of radionuclides into the upper atmosphere due to the breach and burnup of an unprotected waste container during an inadvertent reentry.

Licensing considerations (as developed in Volume III) are summarized in Section 5.6. Requirements for waste processing facilities, ground transport to the launch site and activities that are expected to take place at the launch site are presented.

Flight demonstration testing (as developed in Volume III) is briefly discussed in Section 5.7. Flight tests that are expected to be required to evaluate the performance ot payload and safety systems are described.

Study conclusions are presented in Section 5.8.

5.1 Baseline Concept Definition and Options Summary

This section summarizes the various options and baseline mission concepts currently envisioned for the nuclear waste disposal in space mission. Section 5.1.1 identifies all major mission options available for the space disposal of nuclear waste (from the waste payload fabrication facility to the final space destination), notes the baseline and primary alternatives, and identifies options that are no longer considered viable. Section 5.2.2 summarizes the baseline space option concept for nuclear waste management.

The information included here has been derived from the "Concept Definition Document for Defense Nuclear Waste Disposal in Space", prepared for NASA/MSFC by Battelle-Columbus Laboratories, dated October 23, 1978.

5.1.1 Concept Options

The baseline concept for the initial space disposal of nuclear waste has been developed by Battelle and NASA/MSFC from a considerable number of options that are available at each step along the way from the reactor to the ultimate space disposal destination. A summary of the various options available is shown in Figure 2. The baseline mission options are shown in the blocks; primary alternatives are indicated by an asterisk, and those options which are no longer considered viable have lines drawn through them.

5.1.2 Overall Baseline Mission Profile

The major aspects of the baseline mission profile for the space disposal of nuclear waste are defined in this section. Figure 3 provides a pictorial view of this baseline mission profile, which has been divided into six major categories. The mission categories are listed and discussed below:

(1) Nuclear Waste Payload Fabrication (DOE)
(2) Nuclear Waste Ground Transport (DOE)
(3) Payload Preparation at Launch Site (NASA)
(4) Prelaunch Activities (NASA)
(5) Booster Operations (NASA)
(6) Upper Stage Operations (NASA).

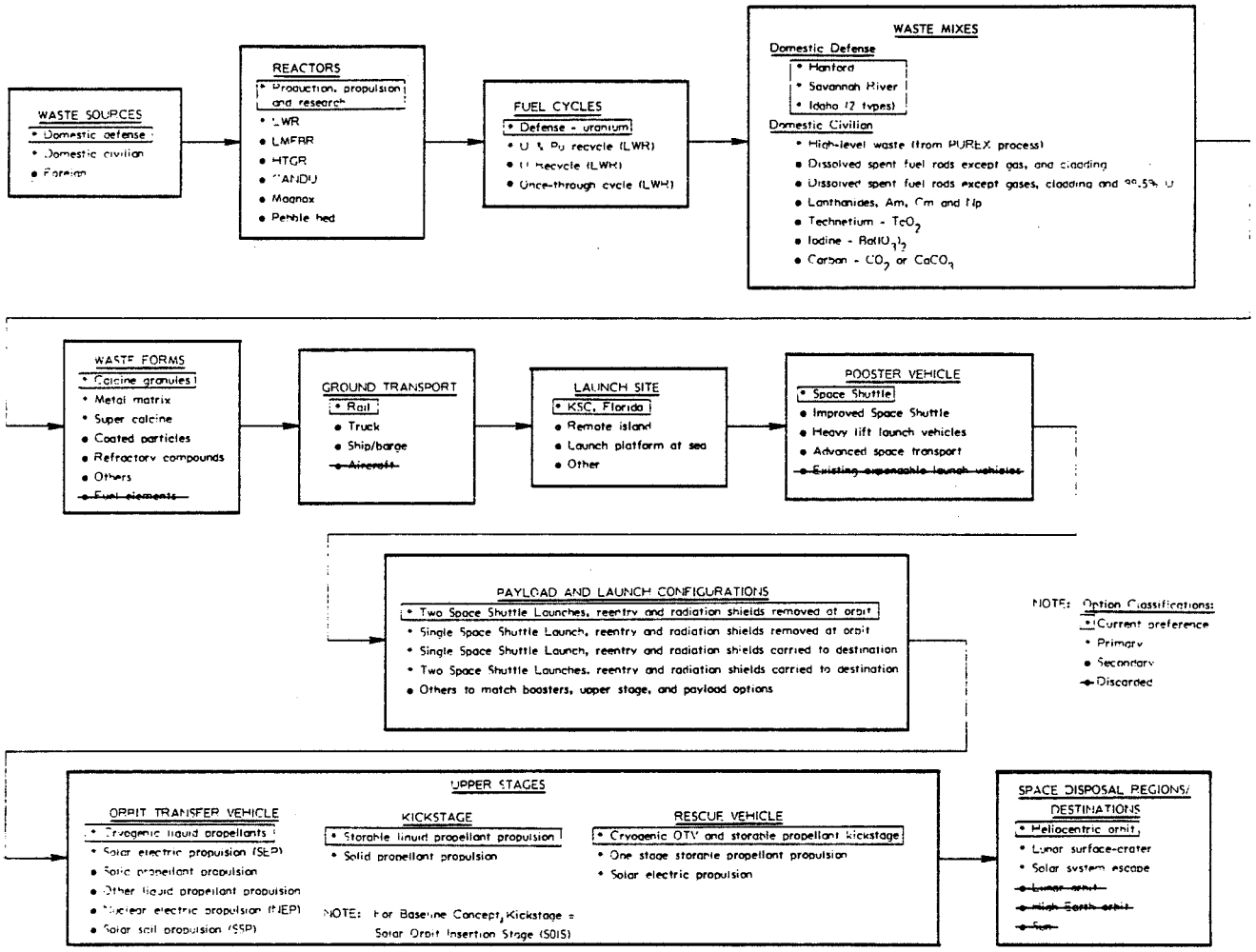

FIGURE 2. MAJOR OPTIONS FOR SPACE DISPOSAL OF NUCLEAR WASTE

The first two activities are expected to be the responsibility of the Department of Energy (DOE) and the last four are expected to be NASA's.

5.1.2.1 Nuclear Waste Payload Fabrication (DOE)

Defense nuclear waste contained at various storage sites (Hanford, Savannah River, and Idaho) would be packaged and transported to a nuclear waste payload fabrication facility. At this facility, the high-level waste, presently in various forms, would be appropriately treated. The current baseline waste form is a calcine. The treated waste would be packaged into the

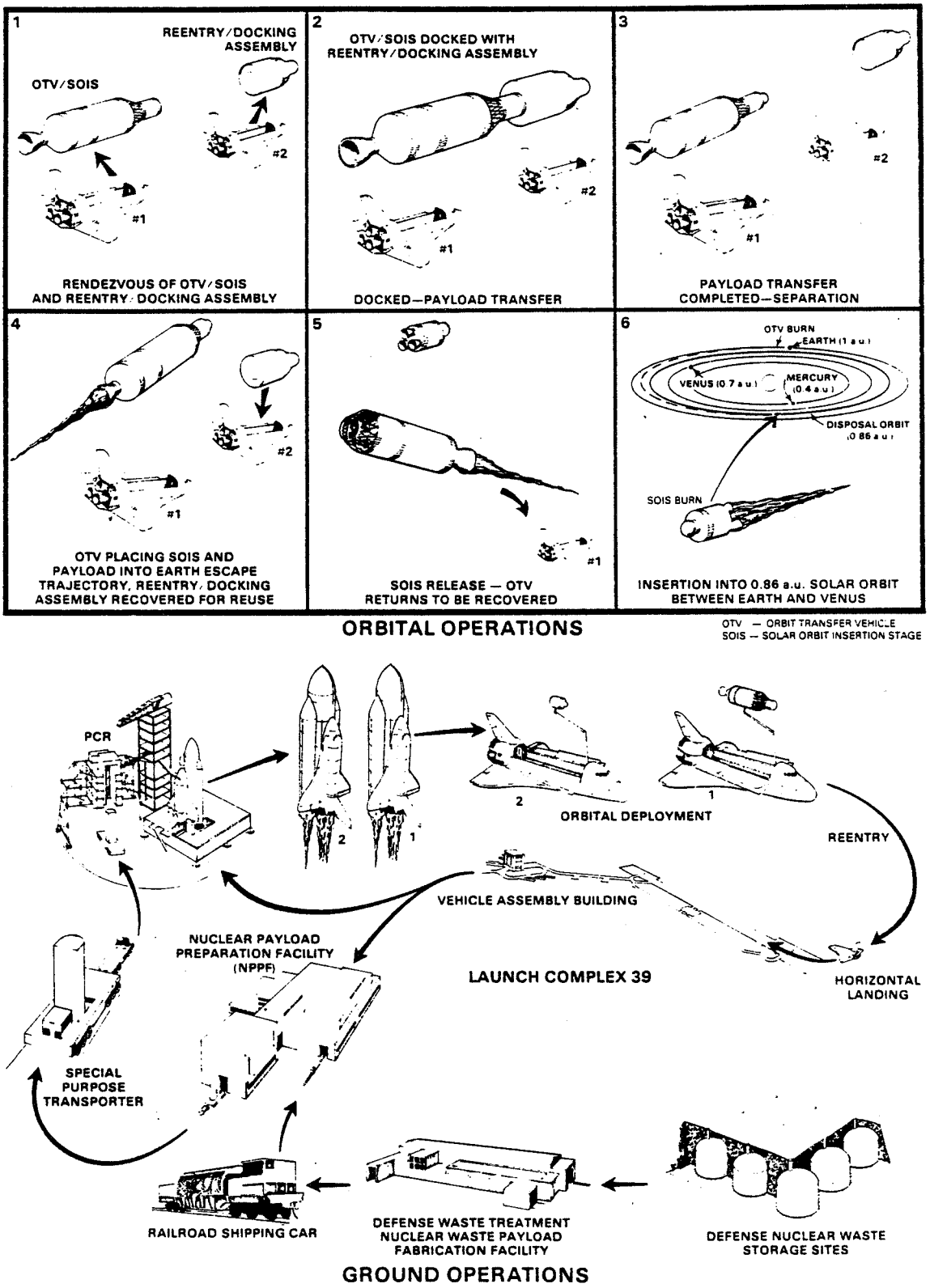

FIGURE 3. GROUND AND SPACE OPERATION PROFILES FOR BASELINE SPACE DISPOSAL MISSION

flight-weight container and placed into the space-mission, gamma-radiation-shield assembly.

5.1.2.2 Nuclear Waste Ground Transport (DOE)

The radiation shielded waste container would be loaded into a ground transportation shipping cask. This cask, which would provide additional shielding, and thermal and impact protection for the waste container to comply with the Nuclear Regulatory Commission/Department of Transportation regulations, would then be loaded onto a specially designed rail car for transporting the waste container from the waste payload fabrication site to the Kennedy Space Center (KSC), Florida launch site for launch into space aboard the Space Shuttle vehicle.

5.1.2.3 Payload Preparation at Launch Site

Once the waste package arrives at the Nuclear Payload Preparation Facility (NPPF) the shielded waste container would be unloaded in the NPPF containment area. Operations in the containment area of the NPPF are expected to include: payload cooling, storage, inspection and monitoring of the waste containers, and incorporation of the radiation shielded waste container into the reentry system. In other areas of the NPPF, the reentry, docking and other auxiliary systems (e.g., flotation, attitude control, and avionics subsystems), which comprise the payload reentry/docking assembly (see Figure 4), are refurbished and checked out. Provisions also will be made to include a payload ejection system into the pallet which supports the reentry/docking assembly.

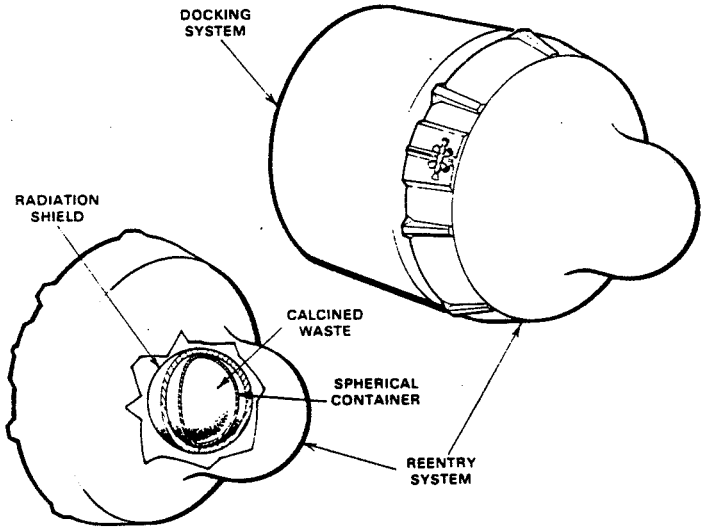

FIGURE 4. ARTIST'S CONCEPT OF A LOADED REENTRY/DOCKING ASSEMBLY

5.1.2.4 Prelaunch Activities

After the nuclear waste payload assembly has been prepared for flight, it would be transferred from the NPPF to the Payload Changeout Room (PCR) at the launch pad by a dedicated special-purpose transporter. Once in the PCR,

the loaded payload reentry/docking assembly would be attached to an auxiliary cooling system. The entire payload package would then be placed into the Space Shuttle cargo bay (see Figure 3) where final systems checkout begins.

5.1.2.5 Booster Operations

Booster operations are those that are required of the Space Shuttle vehicle between the time of Space Shuttle Main Engine ignition and the return of the reusable Space Shuttle vehicle hardware to the launch site. Two Shuttle vehicles would be readied for launch for a given disposal mission. For example, Pad A at KSC Launch Complex 39 could be used for launching the Shuttle carrying the reusable OTV and the 3-axis stabilized Solar Orbit Insertion Stage (SOIS). Pad B would then be used to launch the Shuttle vehicle that carries the nuclear waste payload.

The OTV and SOIS would be launched by Shuttle number 1 at a 108-degree south azimuth to a 333-km (180-n.mi.) circular orbit inclined 38 degrees to the equator. Approximately 48 hours later, the nuclear waste payload would be launched by the second Shuttle into the same orbit as the first Shuttle. After the OTV delivers the nuclear waste payload and SOIS to the desired trajectory and returns to a low Earth orbit, the first Orbiter would rendezvous with the OTV and return it to the launch site for refurbishment for a later flight. As soon as it is determined that the waste container is safely on its way to the proper space destination, the empty payload reentry/docking assembly would be recovered, stored and returned to KSC on board Orbiter number 2.

5.1.2.6 Upper Stage Operations

After Shuttle Orbiter number 1 is on orbit with the OTV/SOIS, preliminary checkout will begin while the configuration is in the cargo bay. After this has been accomplished, the Shuttle Orbiter manipulator arms will be used to deploy the OTV/SOIS. Following OTV/SOIS deployment, Shuttle number 2 would be launched. When Shuttle Orbiter number 2 reaches orbit, the nuclear waste payload reentry/docking assembly (see Figure 4) would be disconnected, removed, and released. Cooling of the payload would be provided by an auxiliary cooling system located on the reentry/docking assembly. Passive cooling will be adequate after the container is removed from the reentry system. The OTV/SOIS will then rendezvous and dock with the reentry/docking assembly. The waste container would be removed from the reentry system and attached to the SOIS payload adapter.

Once the container is attached to the OTV/SOIS, separation of the reentry/docking assembly occurs and the OTV/SOIS backs away with the container mounted on the payload adapter. The OTV propulsive burn for payload delivery then places the SOIS and its attached waste payload on the proper Earth escape trajectory. The SOIS and payload is then released. In approximately 163 days the payload and the storable liquid propellant SOIS will travel to its perihelion at 0.86 a.u. about the Sun. The SOIS would then place the payload in its final space disposal destination by reducing the aphelion from 1.0 to 0.86

a.u. To aid in obtaining the desired orbital lifetimes, this orbit could be inclined to the ecliptic plane by at least 1 degree. The recovery burns of the OTV would use the remaining OTV propellant to rendezvous with Shuttle Orbiter number 1 for its subsequent recovery, refurbishment, and reuse on a later mission.

5.2 Characterization of Defense High-Level Waste Payloads

This section summarizes the Battelle work that has been accomplished regarding the characterization of defense high-level waste payloads. Section 5.2.1 discusses the present and possible characteristics of the defense wastes. Section 5.2.2 presents a brief discussion of the baseline defense waste compositions used in space disposal analysis. Section 5.2.3 discusses possible waste forms. Section 5.2.4 presents descriptions of preliminary structural, thermal, and nuclear shielding analyses which were performed in parallel with the waste container and reentry protection system design study being performed by NASA/MSFC.

5.2.1 Defense Nuclear Waste Sources and Character

Defense high-level waste (HLW) has been accumulating since the 1940's. This waste results from the reprocessing of plutonium production reactor fuel at the Hanford and Savannah River sites and from the reprocessing of submarine and research reactor fuel at the Idaho site. At the Hanford and Savannah River sites liquid HLW has been neutralized and stored in large in-ground tanks. The result is a waste consisting of sludge, salt cake, and residual liquor. At the Idaho site the liquid HLW is calcined to a powder and stored in in-ground bins as a solid. In general, defense HLW will not generate as much heat or radiation as commercial HLW because of dilution with inert materials and relatively long decay periods.

The Hanford site, located near Richland, Washington, has been producing plutonium and other special nuclear materials since 1944. As a result of the reprocessing of irradiated reactor fuels, HLW consisting of fission products, actinides, cladding components and inert chemical additives has been and will continue to be generated and accumulated. Presently, the defense HLW inventory at the Hanford site consists of:

- 25×10^6 gallons (bulk) ot damp salt cake
- 11×10^6 gallons (bulk) of damp sludge
- 11×10^6 gallons of residual liquor
- 3×10^6 gallons ot liquid waste in active processing
- 2900 capsules of ^{90}Sr or ^{137}Cs.

Because of the extremely large amounts of inert materials contained in the HLW, a radionuclide removal process has been proposed with the objective of removing all long-lived nuclides from the salt cake and residual liquor. A considerably smaller quantity of HLW would result plus a large volume of low-level chemical waste which could be disposed of inexpensively.

The Savannah River Plant, near Aiken, South Carolina, has been producing special nuclear materials for defense purposes since 1953. Products are mainly plutonium and tritium. HLW, consisting of fission products, actinides, cladding components and inert chemical additives has been and will continue to be generated and accumulated by the reprocessing of spent reactor fuels. In contrast to the Hanford operations, which used several reprocessing methods, all the Savannah River waste is generated by Purex reprocessing. This waste is stored as an alkaline liquid with a precipitated sludge in large underground tanks. After the decay heating has been reduced by the decay of short half-life nuclides, the supernate is converted to salt cake.

By 1985, the Savannah River HLW inventory is expected to consist of:

- 13.3×10^6 gallons of damp salt cake
- 3.4×10^6 gallons of sludge
- 5.6×10^6 gallons of residual liquor.

The large quantity of inert materials in the Savannah River HLW has encouraged the use of a proposed salt decontamination process. This process is quite similar to the Hanford radionuclide removal process.

In contrast to Hanford and Savannah River waste, the Idaho Chemical Reprocessing Plant near Idaho Falls, Idaho, has been converting liquid HLW to calcine. Calcining is the high temperature treatment of liquid HLW to produce granular solid waste oxides and other solid compounds. Idaho HLW contains fission products, actinides, cladding components, and inert chemical additives, and is produced by several processes.

At the present time, approximately 1500 m^3 of calcine have been produced. As reprocessing and calcine production continue, a total of 8500 m^3 or 11,900 MT of calcine is expected by the year 2000. This mass can be reduced further by a proposed calcine dissolution process.

In summary, Table I presents the volumetric inventories of high-level waste (HLW) as they presently exist. These wastes have, on the average, been cooled for periods exceeding ten years.

TABLE I. CURRENT VOLUMETRIC DEFENSE HLW INVENTORIES

	Waste form (1000 m^3)			
Site	Salt Cake	Sludge	Liquor	Calcine
Hanford	95	42	42	0
Savannah River	50	13	21	0
Idaho	0	0	0	1.5

As mentioned above, to facilitate terrestrial disposal of defense nuclear waste, certain radionuclide concentration processes have been proposed at each site to reduce the amount of the inert material in the high-level waste. At Hanford and Savannah River, the salt cake and liquor would be decontaminated and the extracted radionuclides combined with the insoluble portions of the existing radioactive sludge. At Idaho, the calcine would be redissolved, to the extent possible, and the radionuclides combined with the insoluble portions of the calcine. Table 2 provides the characteristics of defense HLW for terrestrial disposal of the Hanford, Savannah River and Idaho wastes. Total mass, activity, heating rate, as well as density and specific data are given.

TABLE 2. CHARACTERISTICS OF DEFENSE HLW FOR TERRESTRIAL DISPOSAL

Waste Characteristics[a]	Waste Source		
	Hanford (1990)	Savannah River (1985)	Idaho (2000)[b]
Total Mass, MT	16,400	3750	600
Total Activity, Ci	7.8×10^{7}	3.2×10^{8}	1.3×10^{8}-1.2×10^{9} [c]
Total Heat Generation Rate, kW	460[d]	1725	1700-4200[c]
Density, g/cc	0.7-1.6	0.7-1.6	1.1-1.6
Specific Activity, Ci/kg	4.8	85	216-2000[c]

NOTES:
(a) Data based upon ERDA documents 77-44, 77-42/1, and 77-43, "Alternatives for Long-Term Management of Defense High-Level Radioactive Waste" (1977).
(b) Assuming 8500 m^3 of calcine by the year 2000.
(c) Assuming no decay for all calcine. Although no data are available for decayed calcine, it can be expected that the actual radiation and heat levels, by the year 2000, will be approximately 1/10 to 1/20 of those given above for Idaho waste.
(d) Assuming that approximately 2/3 of the high heat-emitting elements (Cs and Sr) have been removed from this waste.

Additional inert removal, or radionuclide concentration, will be required to make the space disposal option more feasible. Table 3 provides what is believed to be high and low mass inventory estimates for space disposal. The desired high scenario has been assumed as the baseline for this study. For the baseline case, 380 flights will be required for removal of defense high-level waste, assuming a 5.5-MT payload and two Space Shuttles/payload.

TABLE 3. DESIRED HIGH AND DESIRED LOW MASS INVENTORIES OF DEFENSE HLW PROPOSED FOR SPACE DISPOSAL

Site	Desired High	Desired Low
	Metric Tons, MT	
Hanford	605	244
Savannah River	375	116
Idaho	60	20
TOTALS	1040	380

5.2.2 Waste Compositions for Space Disposal

The baseline radionuclide compositions of Hanford and Savannah River HLW, assuming a 5500-kg waste payload, are given in detail in Volume II of this report. No detailed data for Idaho waste exists at the present time. For most of the analyses reported here, the Hanford composition was used, since it represents the largest mass and its definition has the highest confidence level of the three.

5.2.3 Waste Forms for Space Disposal

As discussed previously, the existing and future defense wastes would be concentrated. The resulting wastes would be the insoluble sludge components, from Hanford and Savannah River, and the insoluble calcine components from Idaho. Wastes remaining after the Idaho concentration process can be converted to calcine again; however, it is not clear if high temperature treatment of Hanford and Savannah River wastes will actually yield oxides. For the purpose of defining a baseline, it is assumed that calcines can be produced following the presently proposed radionuclide concentration processes and also after any additional treatment occurs to remove portions of remaining inert materials.

Final waste forms may be calcine, compartmented calcine, metal matrix, supercalcine, or coated particles. Hanford is also developing a sintered clay ceramic waste form which may have waste loadings comparable to metal matrix forms. High waste loading, thermal stability, and low dispersibility will be the primary requirements for a suitable waste form. The baseline waste form, at this time, is calcine.

5.2.4 Containerization Systems

The space disposal of high-level nuclear waste requires that the payload primary container maintain its integrity during both the expected normal and certain defined accident environments. Unlike the transportation regulations for terrestrial shipment of nuclear materials, there are no regulatory definitions of either the normal or accident conditions for space disposal. Consequently, before the containerization analysis began, it was necessary to have the various payload environments defined. (Section 5.4.1 summarizes the various accident

environments that might be expected during the space portion of the disposal mission.) The emphasis here was placed upon accident environment response, although the effects of normal environments were used to initially define the payload container. Of the accident environments, the most severe chosen for analysis were:

- Explosion and fire on launch pad
- Reentry of an unprotected payload container.

Assuming 5500 kg of waste per payload, the required number of payloads for the three waste sources is shown in Figure 5 as a function of waste concentration factor (WCF). The concentration for terrestrial disposal is defined as having a waste concentration factor of 1.0. The primary container design is dominated by the character of its contents, the high-level waste. Table 4 lists the baseline high-level waste payload characteristics for each of the three waste mixes.

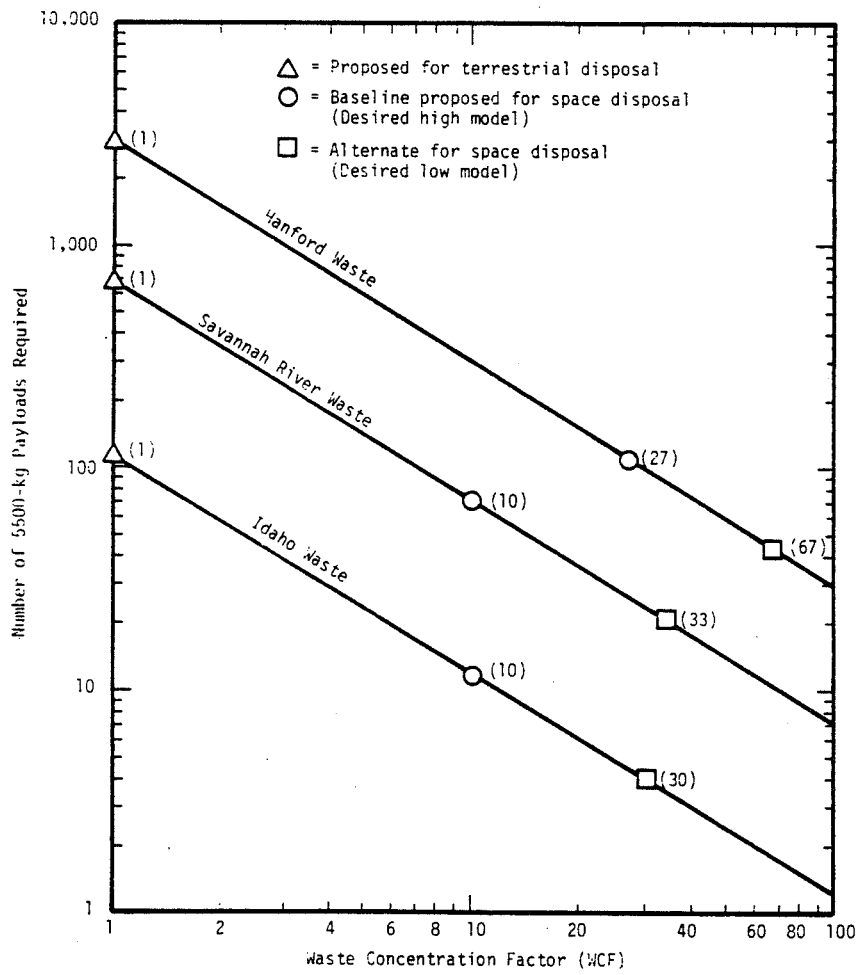

FIGURE 5. TOTAL NUMBER OF PAYLOADS AS A FUNCTION OF DEFENSE WASTE CONCENTRATION FACTOR (WCF)

TABLE 4. BASELINE HIGH-LEVEL DEFENSE WASTE PAYLOAD CHARACTERISTICS

Parameter	Hanford	Savannah River	Idaho
Disposal Reference Date	1990	1985	2000
Waste Density, g/cc	2.8	2.8	2.8
Waste Radius, cm	78	78	78
Waste Activity, Ci	7×10^5	7.9×10^7	-
Radionuclide Mass, kg	470	660	-
Inert Mass, kg	5030	4840	-
Waste Concentration Factor (WCF)[a]	27	10	10
Specific activity, Ci/kg	1.5×10^3	1.2×10^5	-
Heat Generation, kW	4.34[b]	25[c]	-

NOTES: (a) The waste concentration factor is defined as the ratio of the masses given for each defense waste site, as recommended for terrestrial disposal, to the mass of the waste for space disposal after further chemical concentration (see Figure 5).
(b) Based upon ORIGEN computer calculations.
(c) Based on mass reduction (WCF = 10) and heat generation rate for decayed Savannah River waste.

5.2.4.1 Shielding Analysis

The radiation shielding thickness required to surround a spherical waste container was determined as a function of source strength. Figure 6 shows the relationship between the thickness of a particular shield required to maintain the dose of 2 rems per hour at one meter from the shield surface and the concentration factor for Hanford defense waste. For the baseline case (Hanford Waste, WCF = 27), the uranium shielding thickness is 2.85 cm. The baseline shielded container design is shown in Figure 7. The expected mass breakdown of the baseline waste payload, less the reentry system and other supporting systems, is given in Table 5.

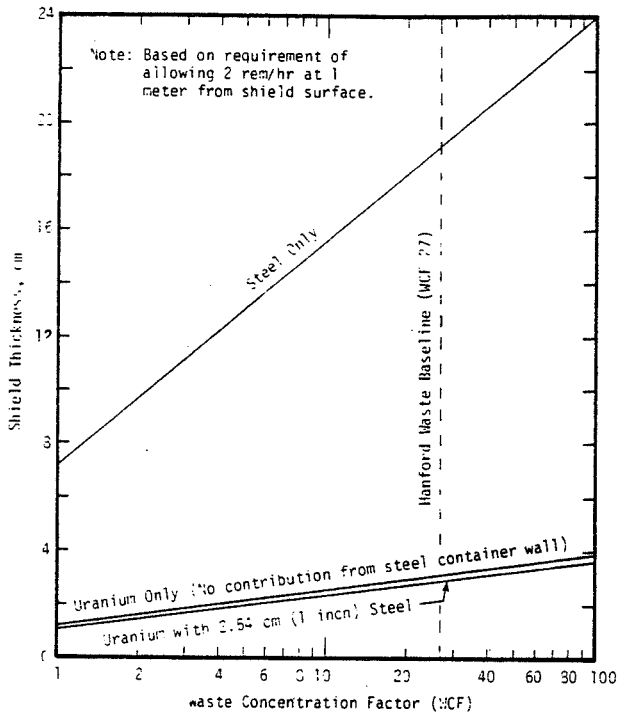

FIGURE 6. SHIELD THICKNESS REQUIREMENTS AS A FUNCTION OF WASTE CONCENTRATION FACTOR FOR HANFORD WASTE

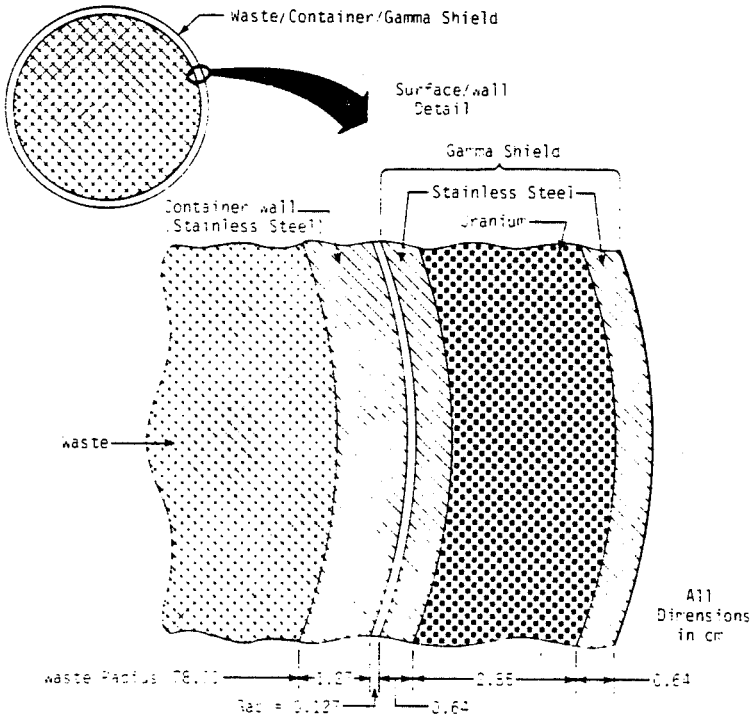

FIGURE 7. BASELINE SHIELDED CONTAINER DESIGN FOR HANFORD WASTE (WCF = 27)

TABLE 5. BASELINE CONTAINER AND SHIELDING MASSES, ASSUMING HANFORD WASTE

Payload Component	Mass, kg
Waste	5500
Container	770
Shielding	
Steel Cladding	836
Uranium	4448
Total	11,554

NOTE: Based on WCF = 27.

5.2.4.2 Thermal Analysis

A one-dimensional thermal analysis of the high-level waste container design was applied to the more critical environmental conditions. The analysis was parametric with the Hanford waste concentration factor as the major variable. A spherical geometry was chosen for the container, as it is the current baseline.

The materials assumed for waste, container and radiation shielding systems and the reentry system are listed below:

- Calcined Waste - maximum density of 2.8 g/cc for all processed defense wastes
- Stainless Steel Container
- Depleted Uranium Gamma Shield
- Reentry System - including stainless steel shells, steel honeycomb insulation, and ablative material.

The maximum allowable temperature of the waste form is a critical parameter in the thermal analysis. The baseline form was chosen to be a calcine, which has a formation temperature of 900 C. However, for conservatism, a normal temperature limit of 700 C was assumed to maintain a stable product. For accident conditions, 900 C was taken as the limiting temperature (T_ℓ).

The actual temperature distributions for the waste payload and reentry system for both "deep space" and "launch pad" environments were calculated and are shown in Table 6 for various Hanford waste concentrations. The auxiliary cooling requirements are included whenever the waste center temperature limit is exceeded.

TABLE 6. PAYLOAD TEMPERATURE DISTRIBUTIONS FOR THE HANFORD DEFENSE WASTE AS A FUNCTION OF WASTE CONCENTRATION FACTOR

Defense Waste Concentration Factor(WCF)	Payload Heat Generation, kW	Shielding Auxiliary Cooling Required, kW	Payload System Element Temperature, C			
			Waste Center	Container	Shield	Reentry System
Launch Environment at 21 C						
1	0.16	0.0	59	44	43	23
27 (Baseline)	4.34	2.64	700[b]	277	248	48
40[a]	6.51	6.51	700	64	21	21
Deep Space Environment at -273 C						
1	0.16	-	-176	-191	-	-
27 (Baseline)	4.34	-	544	118	-	-
67	10.85	-	1286[c]	218	-	-

NOTES: (a) For greater WCF values, auxiliary cooling requirements equal heat generation, but waste requires direct cooling.
(b) Assumed maximum normal operating limit.
(c) This condition would be unacceptable; cooling fins, metal matrix waste form or a smaller payload would be required to reduce this temperature to the acceptable level.

During ground transportation, auxiliary cooling will be required for shipments lasting more than several hours. The limiting parameter for this condition would be the waste temperature. During handling at KSC and while inside the Shuttle, auxiliary cooling will be required for highly concentrated defense waste. In deep space, the unprotected, unshielded payload container should be designed to be within all temperature limits assuming only passive cooling by radiation to space.

5.2.4.3 Accident Response Analysis

The container design was analyzed for its response to various accident environment conditions (see Section 5.4.1). As a preliminary evaluation, two major accidents were chosen to represent the worst-case extreme abnormal

environments. The first accident is defined as an explosion of the Space Shuttle vehicle on the launch pad. This accident involves the effects of a shock wave, liquid propellant fireball, a solid propellant fire and fragment impact. The second accident concerns the payload response to an unplanned reentry of an unprotected container.

Launch Pad Catastrophic Failure of Shuttle. The payload container is assumed to be in the Space Shuttle cargo bay in preparation for launch. As such, it will be housed within a gamma radiation shield and the reentry system. One of the important design trade-offs which has a bearing on the response of the container during this accident scenario is the concept of a "front-end" reentry protection design versus a completely enclosed package (see Figure 4). The ramifications of this design option were considerd in this analysis.

The stress analysis of the container response to the shock wave (see Section 5.4.1.1) took into account the inertia of the loading and material strain rate effects. In addition, the compressive strength of the waste and effects of multiple shells were included. Together, these modeling assumptions led to the conclusion that the conceptual payload container design can adequately resist the shock wave environment.

The fragment environment is described in Section 5.4.1.1. Using dynamic material strengths, the maximum energy absorption capacity of the container design was calculated including contributions from wall shear, waste compression, and shell bending. This analysis showed that, assuming a 20% yield explosion and for the baseline container, shield, and reentry system models assumed, the fragment impact energy is capable of penetrating the waste container. Also, the fragment velocity which corresponds to an impact energy equivalent to the energy absorption capability of the payload package is about 870 m/s.

There are two types of launch pad fires of specific interest (see Section 5.4.1.1): (1) a solid propellant fragment fire and (2) a split solid propellant rocket motor fire. Essentially, the first fire environment is characterized by the External Tank (ET) fire (hydrogen/oxygen) for the first 5 seconds, followed by the solid propellant fire extending for an additional 450 seconds. The time history of the radiant heat flux resulting from this fire is shown in Figure 8. The second fire, the split motor fire, is characterized by the ET fire plus the contribution from the split motor. The radiant heat flux is also shown in Figure 8. For the second fire, the flux is assumed to remain at 3000 kW/m^2 for 15 minutes before complete burnout (see Figure 8). Note that the total heat, Q_T, radiated from the split motor fire is approximately eight times that of the solid propellant fragment fire.

Two configurations were examined for the response of a container for the Hanford waste to both fires. The first included the waste container and radiation shield and neglected the reentry protection and Shuttle structure. This configuration being exposed to the two defined fires represents a conservative, worst case scenario, reflecting the design option of not completely surrounding the shielded waste within the reentry system. The second configuration is identical to the first except that reentry protection is assumed to completely enclose the container and gamma radiation shield. This configuration represents the case where reentry protection is uniform around the container.

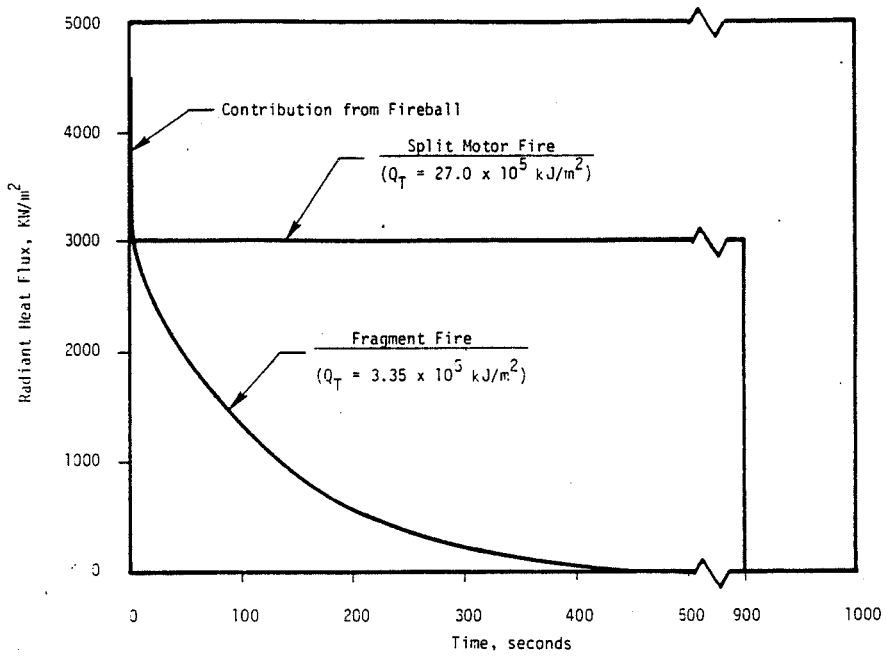

FIGURE 8. RADIANT HEAT FLUX VS TIME FOR LAUNCH PAD FIRES

The transient material response to both fires was analyzed by the Battelle RETAC computer code. As a design basis, an accident limiting waste temperature of 900 C was assumed. This is selected as a level at which some decomposition or melting of the complex waste form may occur. Limiting temperatures (T_ℓ)for other payload materials are given below:

Material	Limiting Temperature, C	Basis
waste	900	decomposition
stainless steel	1450	melting
uranium	1130	melting
steel honeycomb	1450	melting
Min-K	980	service
ATJ Graphite	3300	sublimation

The principal simplifying assumption of the analysis was that melting or sublimation of material was neglected. Thus, the material was assumed to continue to absorb heat as if it remained in place as a pseudo-solid. The effect of this assumption was twofold. First, when the outer shell actually reaches the melting or sublimation temperature, the heat flux into the adjacent material region will be reduced by the latent heat of fusion. The effect of this heat sink mechanism is to reduce the temperature, at any given time, of the inner regions. Second, the outer shell would actually be removed once it has left the solid state, the resultant heat flux acting on the inner regions may be increased due to the absence of the heat capacity effect of the outer shell. This will tend

to raise the temperatures of inner regions. Consequently, the effects of the modeling assumptions are somewhat offsetting, implying the need for more detailed analysis.

In the context of the above discussion, the results of the analysis (for the solid propellant fragment fire) indicate that, for the waste container and radiation shield assembly, the outer edges of the unprotected shield walls reach melting temperatures in the first 15 seconds of the fire (see Figure 9). But, due primarily to the reduced conductivity of the gamma radiation shield/waste container interface gap, the container wall is not predicted to melt (see Figure 9).

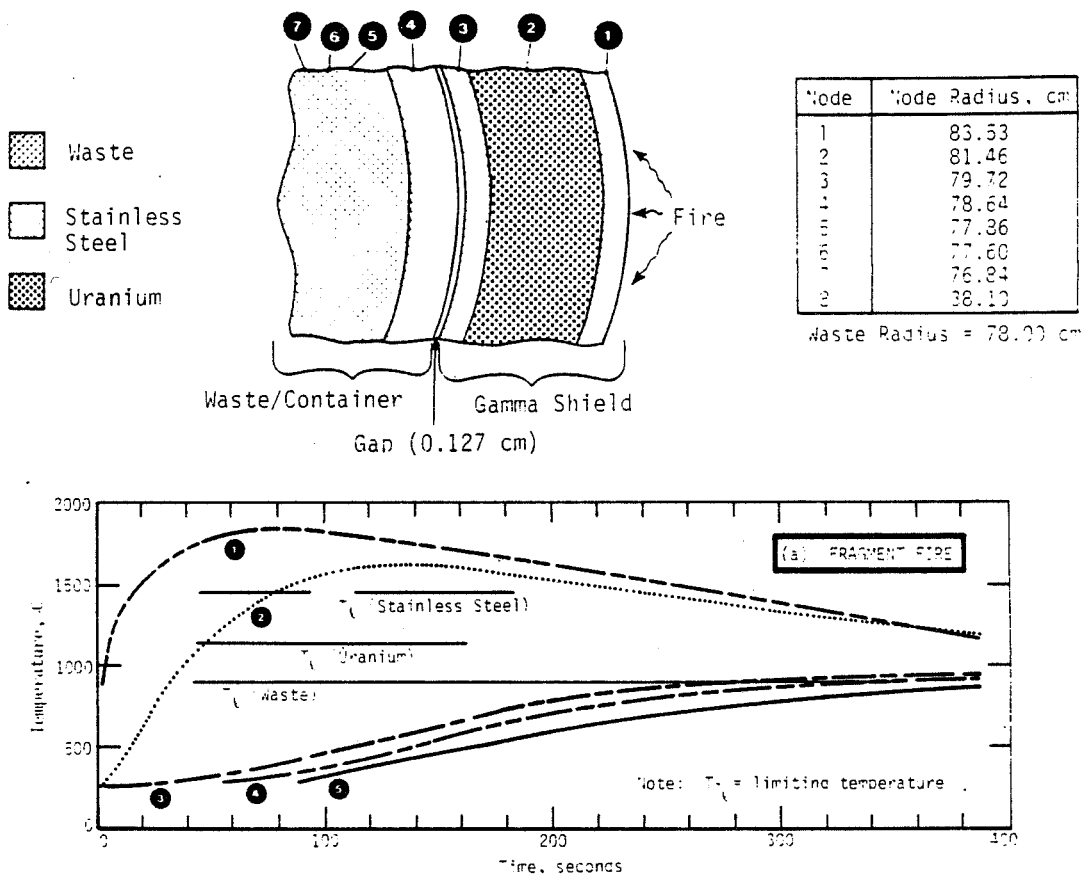

FIGURE 9. THERMAL RESPONSE OF GAMMA RADIATION SHIELDED CONTAINER TO SOLID PROPELLANT FRAGMENT FIRE

In the case of a split motor fire, temperatures of the outer and inner stainless steel containers and the uranium shield all exceeded their melting point for an extended period of time. It is predicted that, approximately 300 to 500 seconds after start of the fire, the waste will be exposed directly to the radiant heat flux.

For the configuration which included the reentry shield, the solid propellant fragment fire and split motor fire analyses show that the temperatures remained below the temperature limits for all materials.

In summary, for the launch pad fires, it appears feasible to design the payload to survive by designing a reentry system that completely encloses the payload container and radiation shield. Without this assumed insulation, the payload is not likely to survive the split-motor fire. For the solid propellant fragment fire, a more detailed analysis may show that payload survival is possible. It must be kept in mind, however, that metal fragments from the ET explosion may likely damage the outer insulating surface, such that the payload would respond differently to a fire condition. More analysis is required to couple these effects.

Reentry Analysis. The conditions postulated for an unplanned reentry of the waste payload are defined in Section 5.4.1.2. Analyses were performed for the thermal response of the payload for two cases: (1) the unprotected (no reentry protection -- bare container) container on a steep reentry, and (2) the unprotected container on a shallow reentry. It is assumed that the reentry system would be designed to withstand the possible reentry environments.

The stagnation point heating rates for reentry accident conditions were calculated by using the Battelle CONTEMP computer code and were input to the Battelle RETAC computer program. The analytical model was similar to the one used for the launch pad fire, in that no melting or ablation was included. The assumption of a spherical rotating body during reentry simplified the analysis by making the external heating coefficient a function of time only, (i.e., one-dimensional analysis). The temperature-time history for a two-dimensional stable body trajectory could be included at a later date, but this detail was not warranted at the present time.

In summary, these results indicate that without reentry protection and assuming a shallow reentry, the waste container wall is expected to melt away and expose the waste to the reentry environment in the upper atmosphere. More detailed analyses are required to determine how much waste material would be deposited in the atmosphere prior to Earth impact. The environmental impact consequences of waste burnup as a result of an unplanned reentry of an unprotected container are described in Section 5.5.2.

5.2.4.4 Dose Calculations

To predict the radiation exposure to workers, crew and principal components of the disposal system, gamma radiation dose rate calculations were performed using the Westinghouse ANISN computer code. The baseline Hanford waste (WCF = 27) was assumed for the analysis. The dose rate relationships (see Volume II, Figure 3-12) can be used with acceptable dose criteria to derive conceptual designs of shielding protection for the crew and various hardware components. For the baseline case, a dose rate of 2 rem per hour or lower is only attained at distances greater than 70 meters from the unshielded container.

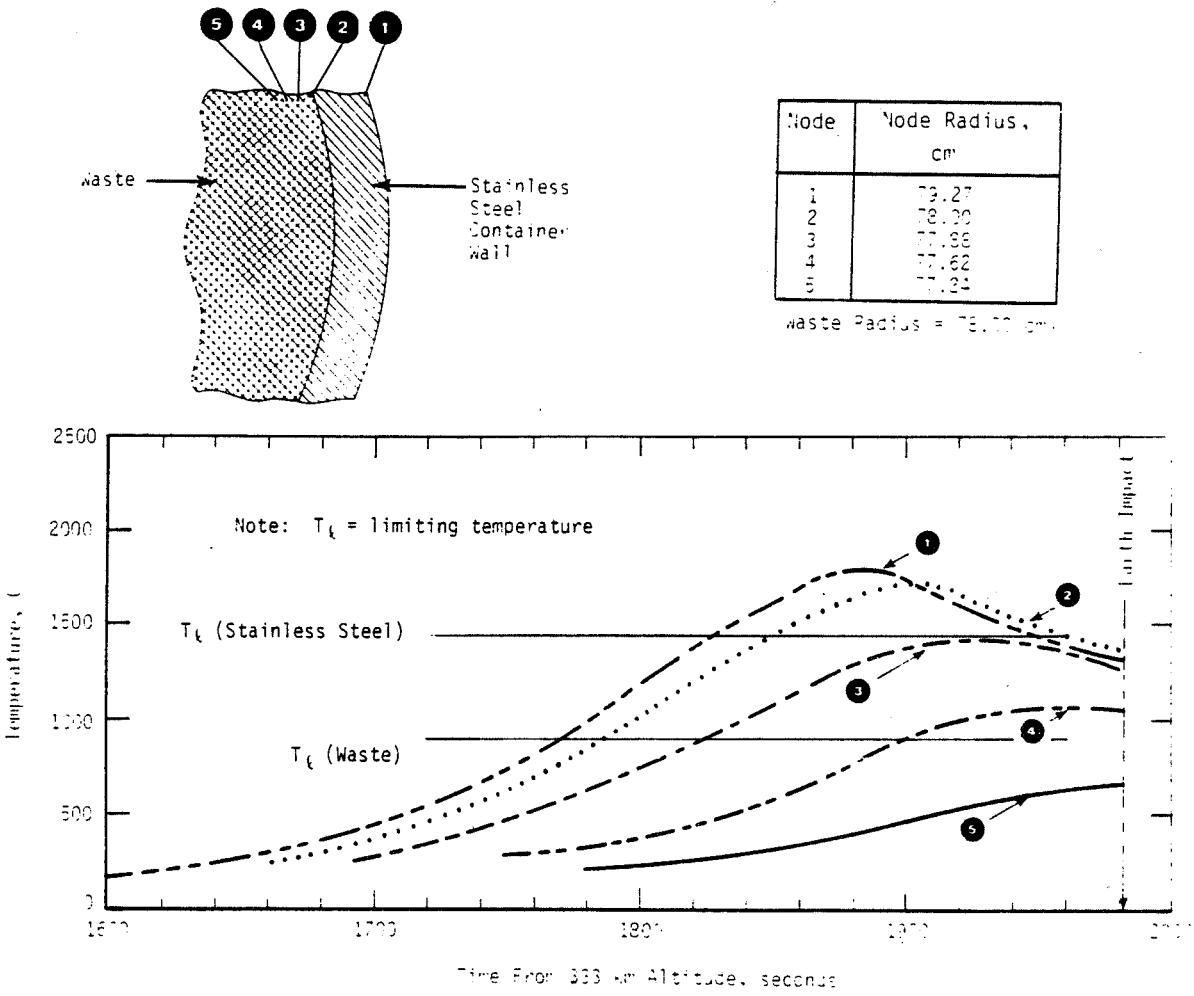

FIGURE 10. THERMAL RESPONSE OF ROTATING UNPROTECTED WASTE CONTAINER DURING SHALLOW UNPLANNED REENTRY

5.3 Mission Analysis

Two special mission analysis tasks were conducted. The first analysis considered the stability and range of impact conditions (attitude, impact velocity) of a nuclear waste payload (container plus reentry system) ejected from the Orbiter cargo bay under emergency conditions. The payload is considered to be ejected both under near-pad and high-speed flight conditions. The results of the analysis concluded that: (1) the reentry system, as currently defined by NASA/MSFC, has adequate stability in the hypersonic regime, (2) for ejection off the launch pad, the reentry system should be designed to withstand impact on the aft structure (see Figure 4) at velocities of ~40 m/s, and (3) for ejection at hypersonic speeds, the reentry system should be designed for impact on the nose structure at velocities ~100 m/s.

The second special analysis considers the rescue and return of a payload following an incomplete and/or misdirected OTV Earth-escape insertion burn. The characteristics of the resulting trajectory and the regions where return to the Shuttle orbit by a second OTV is feasible are identified. For those regions where return is not feasible, boosting to Earth escape or to a higher Earth orbit is considered. A brief summary of the results of this analysis is presented below.

The direction of the erroneous OTV velocity increment is represented by two angles, as shown in Figure 11. The angular error is denoted by ε, measured in the plane containing the intended OTV velocity increment vector and the actual OTV vector. This plane is inclined at the angle δ with respect to the local horizontal plane.

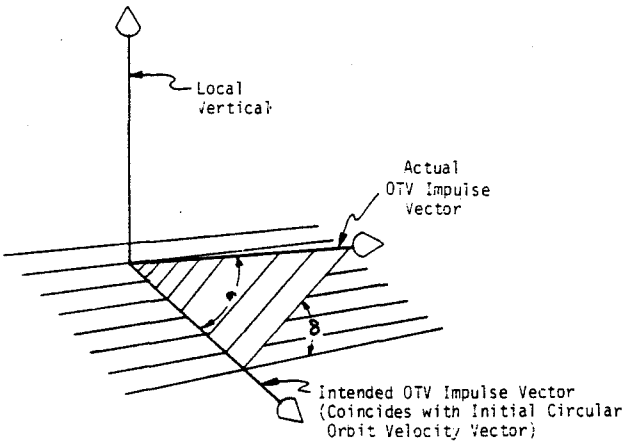

FIGURE 11. DEFINITION OF ANGLE ERROR PARAMETERS

Figure 12 is a map of the ε, ΔV domain and summarizes the results of this analysis. If the OTV pointing error were constrained to the horizontal plane ($\delta = 0^{\circ}$), the permissible angular error (ε) could be in excess of 95 degrees before an unacceptably low perigee would be produced. At the other extreme, if the OTV impulse lies in the vertical plane ($\delta = \pm 90^{\circ}$), the permissible pointing error is reduced considerably. Furthermore, if the value of δ is random, half of all cases will have an absolute magnitude between 45 and 90 degrees; and, from Figure 12, the perigee constraint boundary for $\delta = +45^{\circ}$ is seen to be very near the vertical plane boundary ($\delta = \pm 90^{\circ}$).

In the region below the $\delta = \pm 90^{\circ}$ line, the nuclear waste payload always will either enter an heliocentric orbit or remain in an Earth orbit from which it can be recovered, regardless of the magnitude of the erroneous OTV impulse.

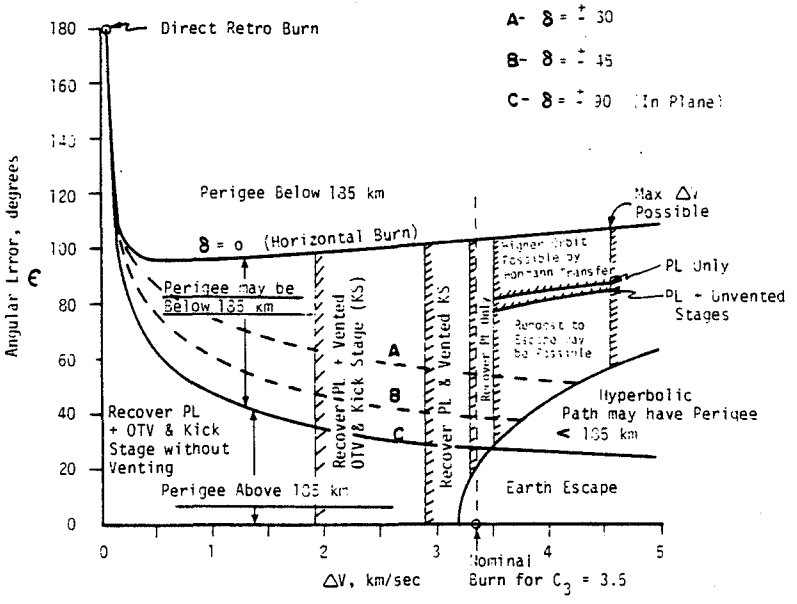

FIGURE 12. EFFECT OF OTV IMPULSE ERRORS FROM INITIAL 333-KM (180-N.MI) CIRCULAR ORBIT

For those packages remaining in Earth orbit, the recovery operation is assumed to be a simple two-impulse maneuver in which a second OTV is placed into an identical orbit with the errant payload, attaches itself to the original vehicle assembly (with negligible expenditure of propellants), and then re-establishes a circular 333-km (180-n.mi.) orbit for recovery by a Shuttle Orbiter. With this simple two-impulse model, the mass which can be recovered by the second OTV is uniquely determined by the magnitude of the erroneous impulse of the first vehicle.

As indicated in Figure 12, if the original impulse magnitude is less than about 1.9 km/sec, and if the perigee altitude is satisfactory as determined by ε and δ, the second OTV can recover the entire package without venting propellants from the first OTV or the SOIS. For initial error impulses from 1.9 to 2.9 km/sec, it would be necessary to vent the propellants from the original stages to reduce the recovered mass. If the initial OTV stage is discarded, the vented SOIS and payload package could be recovered up to initial error impulses of 3.29 km/sec; whereas only the payload itself could be recovered for error impulses from 3.29 to about 3.51 km/sec (if the value of ε were sufficiently large to cause the payload to remain in Earth orbit).

If the magnitude of the first OTV impulse exceeds 3.5 km/sec, recovery by a second OTV is not possible. For error angles (ε) less than about 26 degrees, the nuclear payload would escape into a heliocentric orbit. For greater ε magnitudes, up to the hyperbolic path boundary of Figure 12, the payload would either escape or be placed in a hyperbolic orbit with a perigee

below 185 km (100 n.mi.), depending on the magnitude and sign of δ. If δ were positive (ascending flight path angle), the payload would not pass perigee before escape; but negative values of δ introduce the possibility of direct impact or a velocity loss at perigee which could convert the hyperbolic orbit into an elliptical orbit with an unacceptably low perigee.

As indicated in Figure 12, a region for high-velocity impulse errors exists above the hyperbolic path boundary, where the payload would be injected into an elliptical Earth orbit from which it could not be recovered by a second OTV. In the unlikely event that the erroneous ΔV and ε were sufficiently large to enter this region, it may be possible, as an alternative, to re-boost the payload to escape velocity with the second OTV.

Based on the data summarized in Figure 12, the following conclusions have been reached. Rescue of a failed payload in Earth orbit can be conducted by a second OTV under a wide range of impulse errors provided that the magnitude of the angular error can be held to under ~ 30 degrees from the nominal. If the misdirected OTV burn can be detected and terminated early enough, the second OTV can recover the payload, the failed OTV and the SOIS. If the burn proceeds further, it may be possible to recover the payload, the vented OTV and SOIS; the payload and vented SOIS; or the payload alone, depending upon the velocity increment imparted by the first OTV. If the angular error cannot be held to ~ 30 degrees or less, then a misdirected burn must be terminated almost immediately or else run the risk of possibly injecting into an Earth orbit trajectory with a perigee low enough to result in an early Earth reentry.

5.4 Safety Assessment

In any potential engineering project involving the safety of human beings, it is customary (and, usually, required legally) to perform analyses to show that the project will not compromise human safety beyond an acceptable level. In the disposal of nuclear waste products in space, large amounts of high-level waste would be placed near very large amounts of potentially explosive propellants and oxidizers, be accelerated to very high velocities, and be subject to the possibility of encountering very high temperatures in the case of reentry or propellant fire. Due to the extreme, if highly unlikely, potential consequences of accidents, exhaustive analyses of dangerous environments, and methods of safely coping with these events and conditions must be accomplished. This can only be done over a long period of time as the system concept and design evolves. The work reported here represents the first step in such a sequence.

Section 5.4.1 summarizes those accident environments that are expected to produce the most severe conditions experienced by nuclear waste payloads. The results of this section were used to determine the effects of these severe accident environments on the design of the payload container (see Section 5.2.4.3). Section 5.4.2 presents a brief discussion of possible accidents or combinations of events that could lead to release of the nuclear waste. Fault tree methodology was used, but probabilities were not assigned to individual events because of the lack of data. Subjective estimates have been made for

the most likely failure paths and possible "workarounds" that could lessen their likelihood. Section 5.4.3 deals with some suggested changes to the baseline mission and hardware that could produce a higher degree of safety.

5.4.1 Major Accident Environment Characterization

The first step in defining accident environments was to identify the more severe accidents. A preliminary screening of possible events that could occur during ground handling, prelaunch, launch, and orbital operations led to the identification of a list of accidents. The three major accident environments that were chosen to be evaluated were: (1) Space Shuttle vehicle explosion and fire, (2) reentry of the container with and without reentry protection, and (3) payload sinking to the bottom of the ocean. The environments that the payload would be expected to experience due to these three events are summarized below.

5.4.1.1 Space Shuttle Explosion and Fire

Various types of accidents can occur with the Space Shuttle vehicle which lead to a catastrophic explosion and fire. For example, the vehicle could, during the early phase of the launch (liftoff), tip over, fall back or collide with the launch tower, resulting in a moderate (10-20%) explosive yield. The capability of employing a destruct system is planned where hazardous payloads are flown in the Space Shuttle. When it would be used, the explosive yield (Y) would be quite low (1%). A high velocity surface impact of the vehicle could lead to a high explosive yield ($20\% < Y < 160\%$), if the destruct system would either not be used or would fail. The specific thermal and mechanical environments generated by these postulated events can be categorized into four areas: (1) a hydrogen-oxygen fireball, (2) a blast wave (shock wave) caused by the detonation of the hydrogen-oxygen propellants, (3) high velocity fragments from the External Tank skin resulting from the detonation, and (4) a ground-based solid propellant fire. These four environments are discussed below.

Space Shuttle Hydrogen/Oxygen Fireball Environment. If the fully loaded (liquid hydrogen/liquid oxygen) Space Shuttle External Tank (ET) were to explode on the launch pad, the nuclear waste payload could be exposed to a short-term severe thermal environment. The basic fireball model employed for this analysis is that of Bader. Figure 13 presents a schematic that defines the assumed fireball features and fireball development with time. Time $t = 0$ is when the initial explosion begins. The features of the modeled fireball stem and possible residual fire are also shown in Figure 13. The resulting relationship between temperature and time is provided in Figure 14. This figure indicates that all propellant is predicted to be consumed in about 6.6 seconds and the extreme thermal environment resulting from the fireball is expected to last less than 10 seconds. During actual conditions, air entrainment would be expected to lower the temperature and heat flux values. A residual fire is assumed to occur. It is not clear, however, how long this fire will continue. The postulated solid propellant fire (from the Space Shuttle Solid Rocket Boosters) may last from 7 to 15 minutes and would provide higher temperatures and fluxes than the "residual fire".

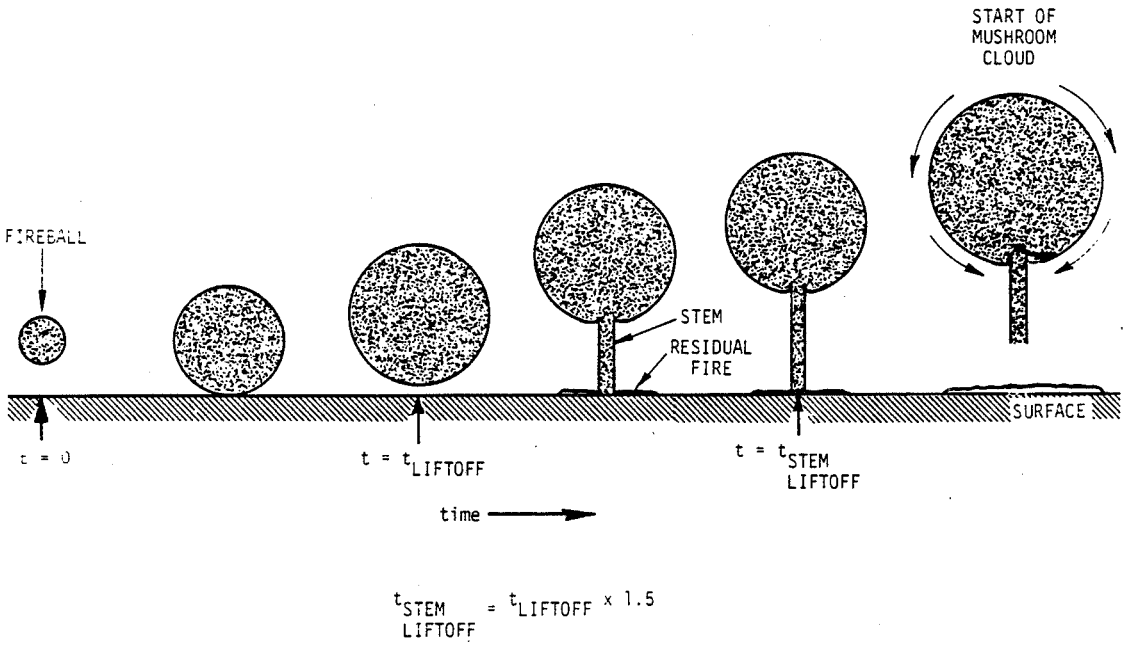

FIGURE 13. SCHEMATIC OF MODELED FIREBALL DEVELOPMENT

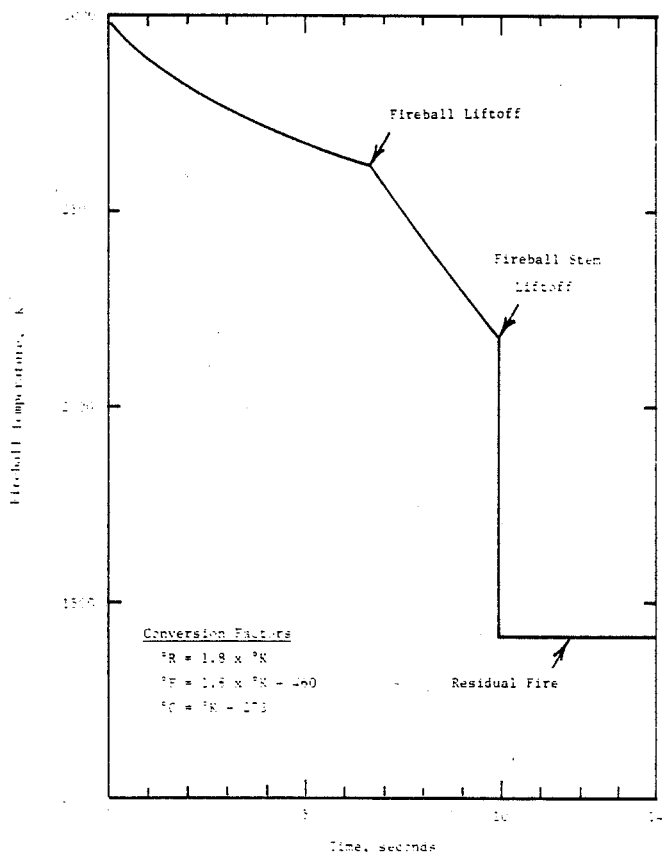

FIGURE 14. THERMAL ENVIRONMENT FROM SPACE SHUTTLE HYDROGEN/OXYGEN FIREBALL

Space Shuttle Solid Propellant Fire Environment. An early flight failure may result in the payload separating from the Space Shuttle Orbiter and falling to the launch pad. It is possible that the payload will then be subjected to a fire involving solid propellant from the Solid Rocket Boosters (SRBs). Two cases have been examined: one in which the SRBs have disintegrated and fragments of unconfined burning propellant are scattered on the launch pad (see Figure 15), and a second case where the SRB has been split lengthwise by a linear-shaped destruct charge but is otherwise intact (see Figure 16).

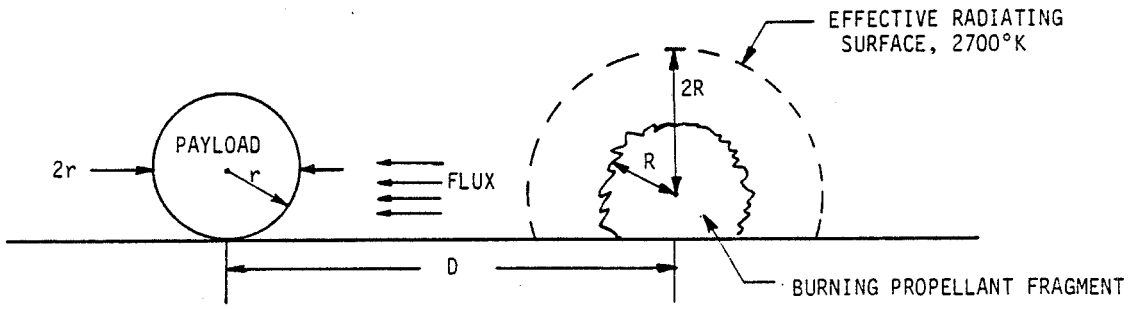

$$\alpha = \frac{D-2R_o-r}{2R_o} \qquad R\ (@t=0)=R_o$$

FIGURE 15. FRAGMENT MODEL FOR SPACE SHUTTLE SOLID PROPELLANT FIRE

Heating of the payload is considered to be dominated by radiation from the burning propellant. This is justified by the high radiant flux corresponding to the high effective temperature and the near unity emissivity of the flame.

For the fragment fire, as the propellant fragment burns, its size decreases and the normalized separation increases. With Figure 17 and initial conditions of R, r, and D (see Figure 15), the time history of the radiant flux at the payload surface may be determined. Since the maximum web thickness of the SRB propellant grain is 1.04 m, R_o = 1.04/2 (where R_o is the fragment radius at t = 0), and the maximum duration of a solid propellant fragment fire will be τ = (1.04/2)/(0.0115) = 452 seconds or about 7.5 minutes.

For the split motor fire, the resulting heat fluxes to the payload are shown in Figure 18. Because the geometry does not change with time, the heat flux remains constant until the propellant within the motor is consumed. With a maximum web thickness of 1.04 m and a burn rate of 0.00115 m/s, the fire is expected to last 904 seconds or about 15 minutes.

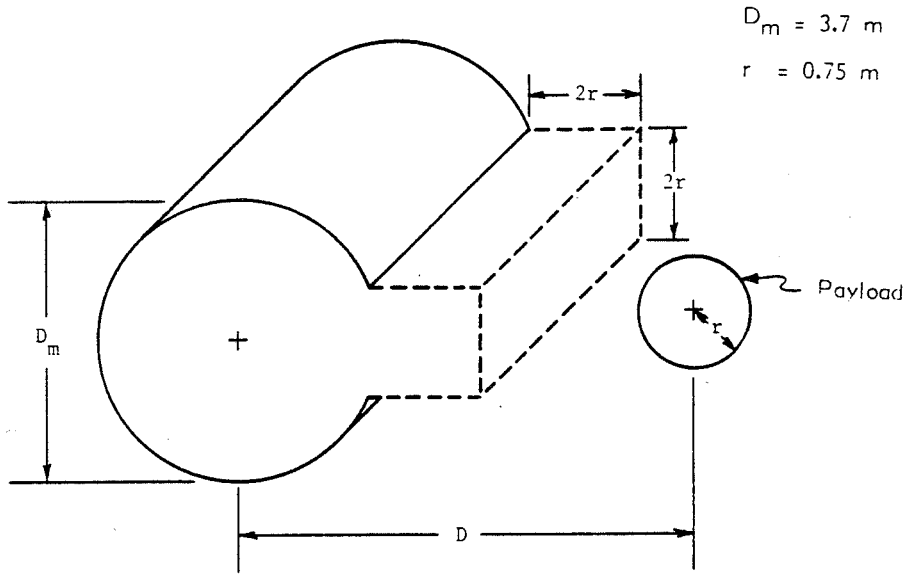

FIGURE 16. SPLIT MOTOR MODEL FOR SPACE SHUTTLE SOLID PROPELLANT FIRE

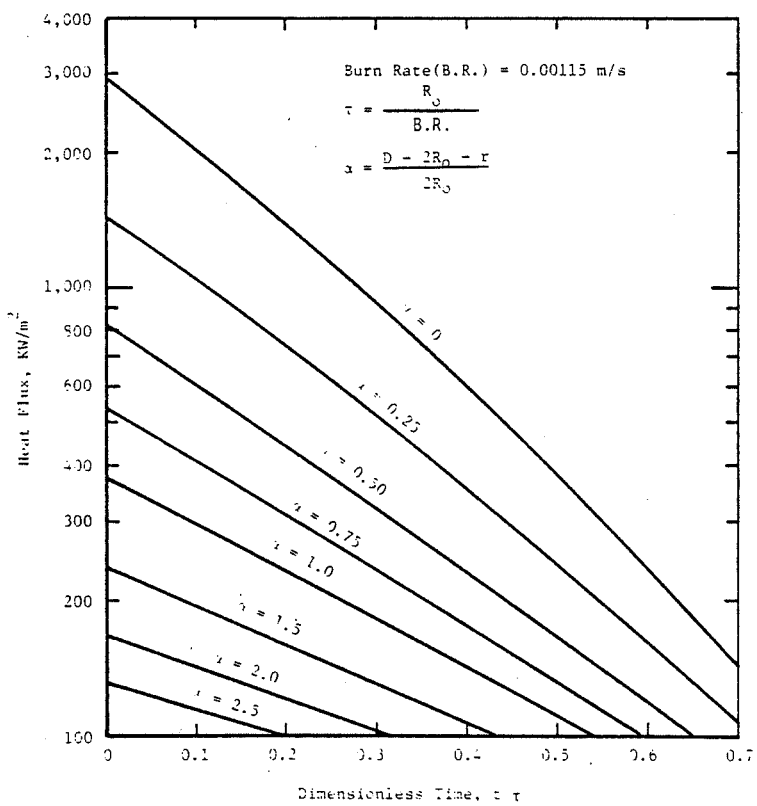

FIGURE 17. MAXIMUM HEAT FLUX AS A FUNCTION OF TIME (FRAGMENT FIRE MODEL)

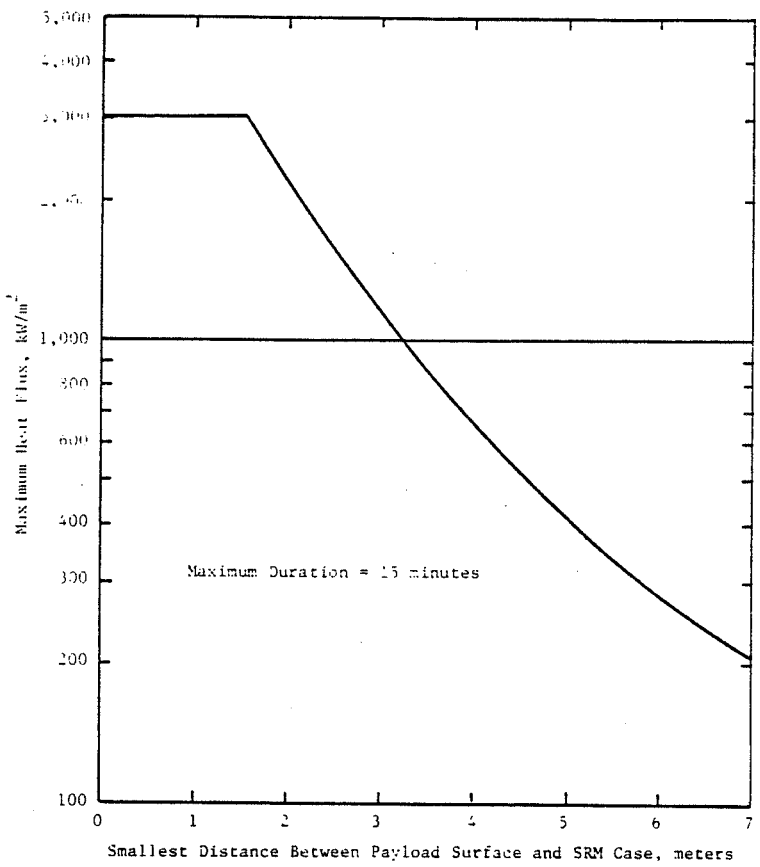

FIGURE 18. MAXIMUM HEAT FLUX AS A FUNCTION OF DISTANCE (SPLIT MOTOR FIRE MODEL)

Overpressure Resulting from Space Shuttle External Tank Explosion. The ET could explode as a result of various on-pad or ascent accidents or malfunctions. Also, the ET can be destructed deliberately by the linear-shaped charge that is placed along the ET on the side opposite to the Orbiter, should flight controllers determine that an off-course vehicle would endanger the local population or ground features. Depending upon the event, varying degrees of explosive yield can result. The explosive yield is defined as percentage of TNT equivalent. For example, if a given ET explosion would produce a 100% yield, that means that the total weight of propellants would produce the same effect as the same weight of TNT.

The center of explosion (COE) for the Space Shuttle case is taken to be the center of the intertank structure, between the liquid hydrogen and liquid oxygen tank of the ET. Given the position of this assumed COE and the position of the nuclear waste payload, the distance from the COE to the payload surface was calculated to be 21.6 m (70.8 ft).

Procedures outlined in the CPIA-194 Hazards of Chemical Rockets and Propellants Handbook (Volume I) were used to calculate the overpressures that

would result from the incident and reflected shock waves. The results are presented in Figure 19 for five different explosive yields.

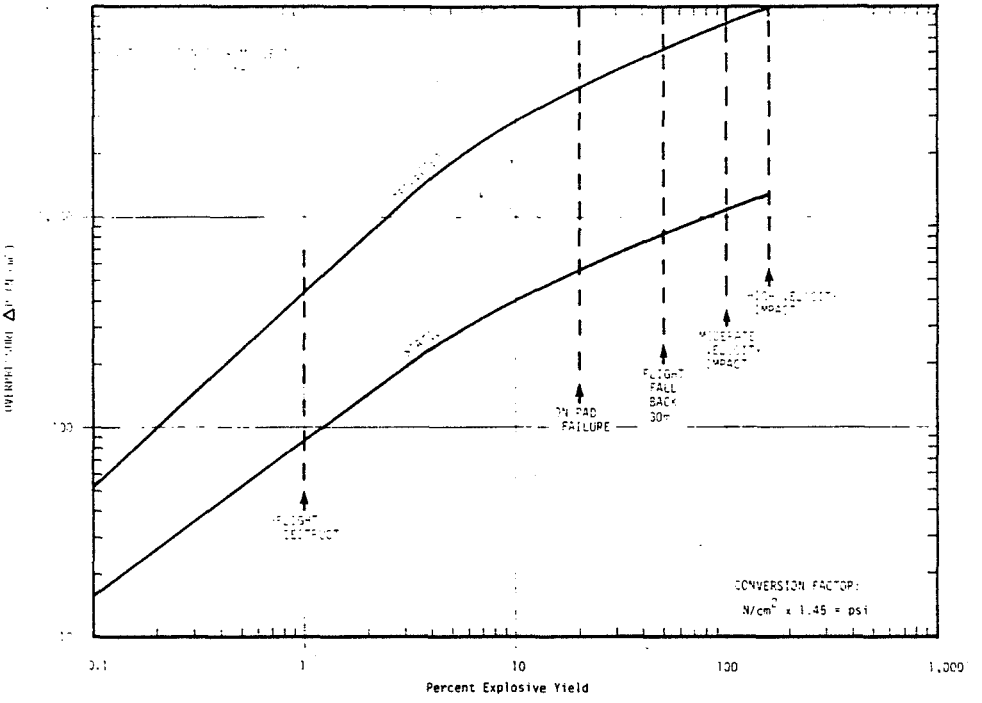

FIGURE 19. OVERPRESSURES AS A RESULT OF SPACE SHUTTLE ET BLAST WAVE

Space Shuttle Fragment Environment. An explosion of the External Tank (ET) could result in the payload being impacted by fragments of the ET. The flux of fragments by velocity and size was calculated for explosive yields (based on the mass of hydrogen and oxygen in the ET) of 1, 20 and 160 percent TNT equivalent. These yields correspond to hypothesized possible failure sequences, with the highest yield occurring from a high-velocity impact of the Space Shuttle onto an unyielding surface. Figure 20 shows the results for a 20% explosive yield. The fragments have been grouped into size ranges to permit a single presentation of the results.

Concluding Remarks. The worst-case accident environments that are expected for an on-pad explosion and fire have been characterized. The environments defined here for the Space Shuttle are much more severe than those that have previously been defined for the Titan III launch vehicle. The use of a destruct system, when flying nuclear waste payloads, or other hazardous payloads, would greatly reduce the severity of the accident environments. The data developed in this section have been used to evaluate the response of the reentry system to the on-pad Shuttle explosion and fire (see Section 5.2.4.3 for summary of results).

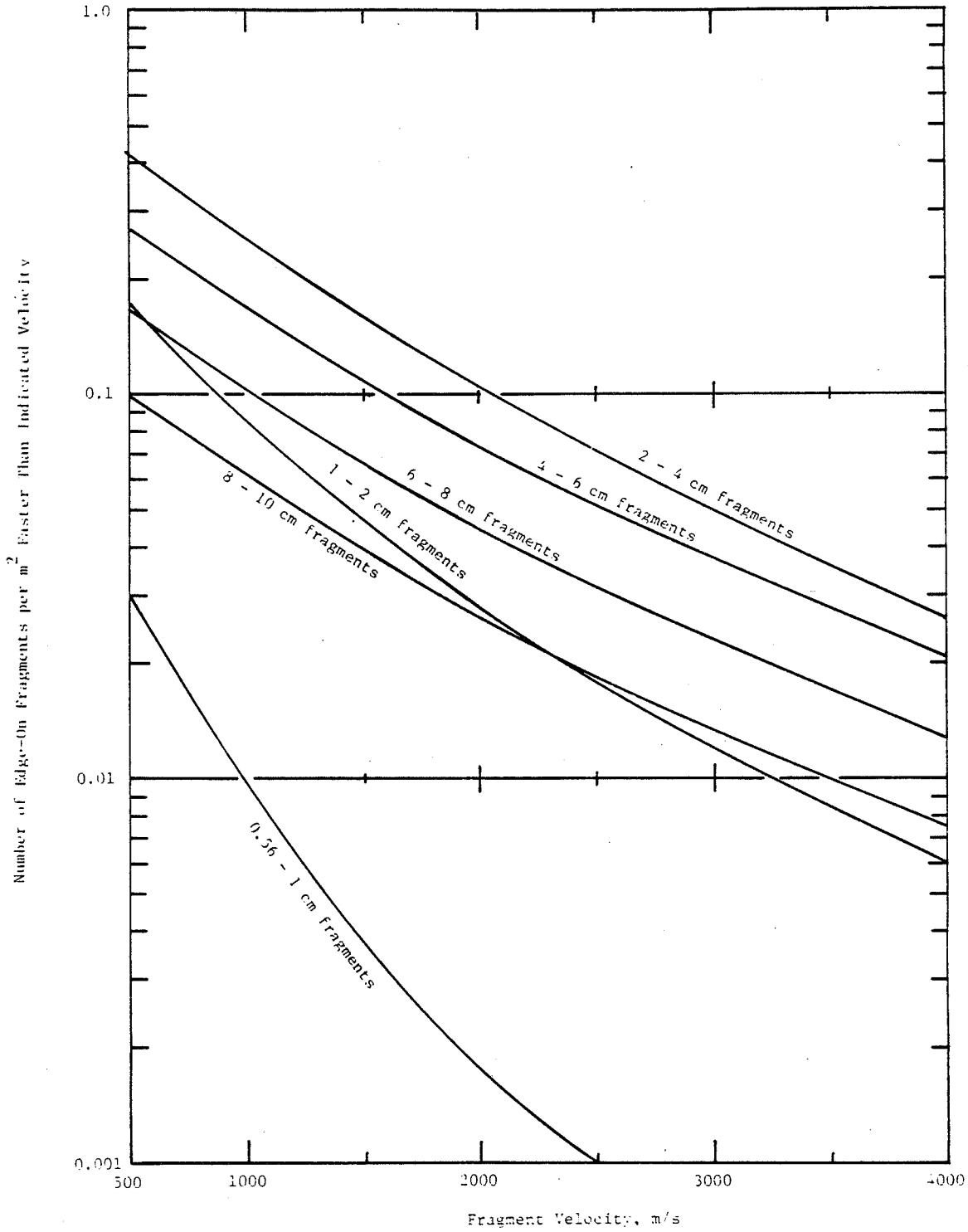

FIGURE 20. FRAGMENT VELOCITY DISTRIBUTION ASSUMING 20% YIELD FOR SPACE SHUTTLE FRAGMENT ENVIRONMENT

5.4.1.2 Reentry of Container With/Without Reentry Protection

Various types of low probability malfunctions could occur which might lead to the atmospheric reentry of the loaded reentry system or the unprotected nuclear waste container. The protected spherical container (positioned in the reentry system - see Figure 4) may reenter after an emergency ejection from the Space Shuttle cargo bay just prior to achieving orbit, or the container without reentry protection (having been removed and attached to the payload adapter of the OTV/SOIS configuration) may reenter after a critically inaccurate OTV burn coupled with the occurrence of other malfunctions. These reentry environments have been characterized by employing the Battelle CONTEMP computer code. The results of the reentry calculations for the two cases are presented in Volume II of this report, where various parameters are plotted versus altitude. The parameters are time, velocity, stagnation heating rate, stagnation pressures and stagnation temperatures. These data were used to determine the response of the payload in the reentry environment (see Section 5.2.4.3 for discussion of consequences).

5.4.1.3 Payload Entry into Deep Ocean

The intact reentry of a waste payload (considered to be the loaded reentry system) would likely result in an ocean impact. Should the flotation system fail, the reentry system with the loaded container would sink to the ocean floor. The most severe immediate environment would be the very high external pressure exerted on the payload. The relationship between the fraction of ocean depth greater than a certain value as a function of ocean depth pressure for a ground track resulting in a 38 degree inclination orbit (1st pass assumed - KSC launch) has been approximated. The ocean pressures are indicated in Figure 21. The maximum ocean depth and pressure possible are 10.9 km and 11,000 N/cm^2 (16,000 psi), respectively. This environment was not used in the payload design section (5.2.4.3) to evaluate the payload response. Future work should include such analysis.

5.4.2 Preliminary Hazard Analysis

A preliminary hazard analysis was conducted to identify those events and sequences of events most likely to lead to a release of radioactive waste. This preliminary analysis was considered to be the first in a series of steps that, over a period of several years, would result in a final estimate of risk associated with space disposal of nuclear waste. As a first step, the results achieved in the current effort are qualitative rather than quantitative. The results are, nonetheless, valuable as indications of those portions of the conceptualized system that should be studied more thoroughly to delineate the significant risks involved in the disposal of nuclear waste in space.

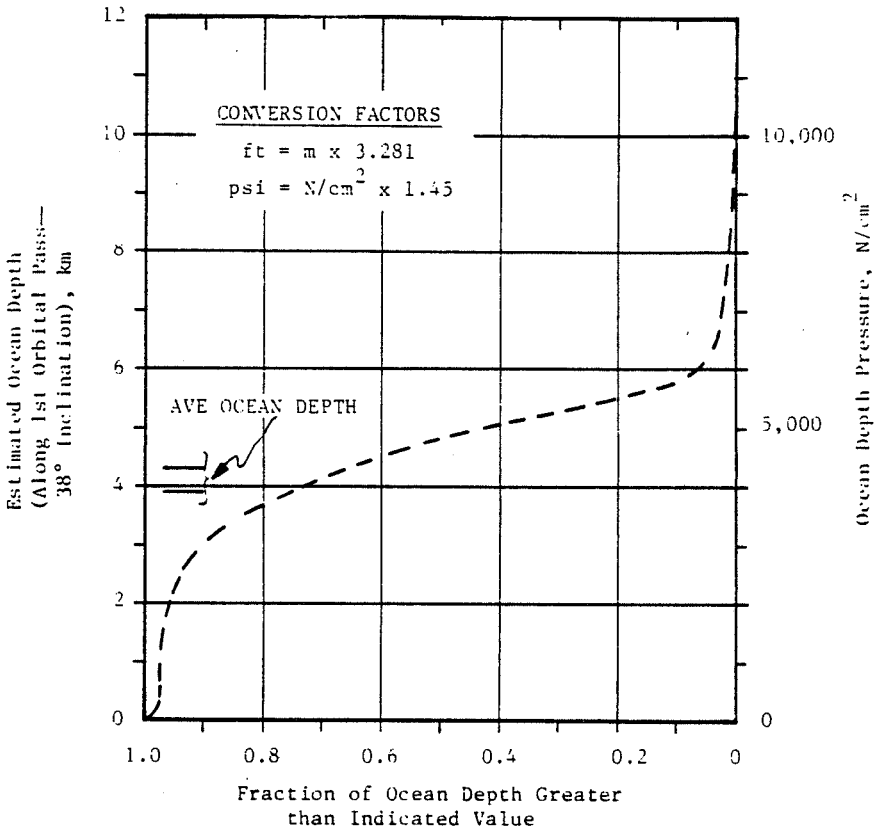

FIGURE 21. DISTRIBUTION OF OCEAN DEPTH (PRESSURE) FOR A 38° INCLINATION SPACE DISPOSAL ORBIT (1st ORBITAL PASS)

5.4.2.1 Mission Phase Definition

To facilitate the presentation of fault tree information (see Section 5.4.2.3), the baseline mission has been partitioned into a number of phases, as shown in Table 7. These phases are not identical to those discussed in the baseline mission profile in Section 5.1.2, but have been chosen to separate the baseline mission into portions in which the hazards can be clearly defined. The discussion of these phases is given in detail in Volume II, Section 5.2 of this report.

5.4.2.2 Failure Probability Data

None of the launch systems (e.g., Shuttle, OTV, and SOIS) for initial and follow-on nuclear waste disposal missions have been flown. Thus, there are no demonstrated reliability data available. After four or five years of operation of the Shuttle, the necessary data base should exist to assess its reliability.

TABLE 7. DEFINITION OF MISSION PHASES

Phase Number	Description of Phase
1	Payload Processing and Storage at Launch Site
2	On-Pad, Prelaunch Operations
3	Ignition to Clearing of Tower
4	Clearing of Tower to SRB Burnout
5	SRB Burnout to ET Drop
6	ET Drop to Achieving Orbit
7	Achieving Orbit to Rendezvous
8	Rendezvous and Docking with OTV/SOIS
9	OTV Ignition to Burnout
10	OTV Jettison to SOIS Ignition
11	SOIS Burn
12	Stay in Planned Orbit

The projected OTV and SOIS are both stages that rely on proven technology. The OTV is a hydrogen-oxygen upper stage that has the benefit of over a decade of Centaur and Saturn experience to draw upon. The SOIS employs technology similar to the Titan Transtage and the Space Shuttle Orbital Maneuvering and Reaction Control Systems components (e.g., tanks, engines, etc.). This technology is quite reliable and available now. There should be little difficulty in designing, developing, and demonstrating safe, reliable upper stages for the space disposal mission.

Design of the waste container, reentry and docking systems is at such a preliminary conceptual level that estimations of reliability are not appropriate at this time. As these designs mature, generation of reliability data will become more feasible.

5.4.2.3 Fault Trees

To obtain a qualitative indication of the relative importance of various potential system failures, preliminary fault trees were constructed and analyzed for each phase of the mission (see Table 7). It is presently not feasible to assign probabilities to each fault event. Additionally, for those phases involving Space Shuttle elements, the fault trees were terminated when a Shuttle element failure was encountered. Analysis below this level is currently being conducted by the Space Shuttle prime contractor. An example of one of the fault trees is represented by Figure 22, for Phase 3.

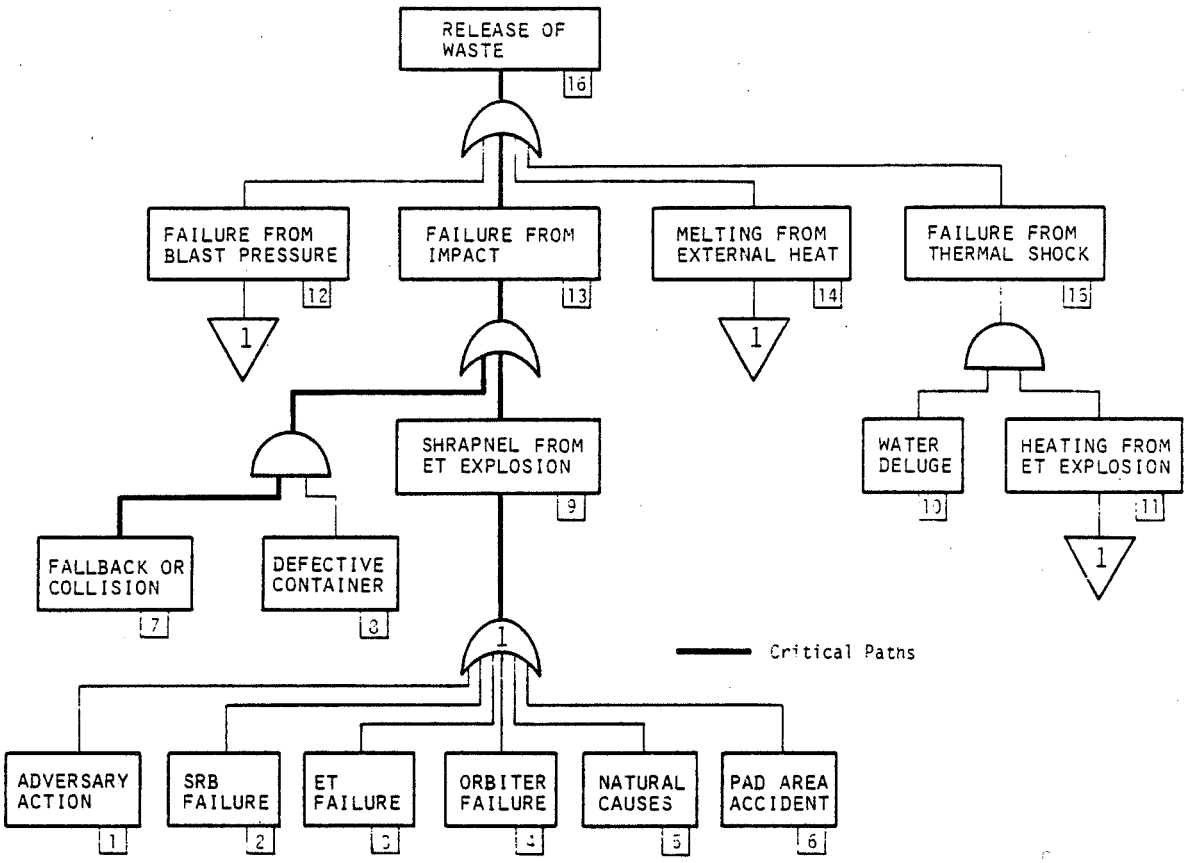

FIGURE 22. PHASE 3 FAULT TREE (IGNITION TO CLEARING OF TOWER)

Each of the fault trees for the 12 mission phases was examined for those single-point and multiple-point failures considered most likely to lead to catastrophic results --- the release of nuclear waste from containment. Elementary criteria have been used in choosing these most likely failure paths. For example, a path that involves only two failure events was considered more likely to occur than one that requires five or six failure events to occur sequentially. Once the most likely event sequences were determined, potential ways of avoiding these paths (or of decreasing the possibility of their occurring) were examined. Possible workarounds were suggested for reducing the possibility of nuclear waste release. However, the feasibility of these workarounds was not examined in any detail.

5.4.3 System Modification Requirements

As the design of a system for disposing of nuclear waste in space matures, modifications to enhance the safety, efficiency and economy of the disposal system will be advanced and considered. This section briefly summarizes some proposed modifications that are suggested for the ground, payload, Space Shuttle and upper stage systems.

Ground systems include the NPPF, ground transporter and the route it travels from the NPPF to the launch pad. A considerable number of safety and design considerations for these systems have been identified (see Volume II, Section 5.3). The ones that have most significance are: (1) provide for tight security to protect against intrusive acts, (2) provide for adequate failsafe containment, and (3) minimize handling heights.

The baseline payload system is potentially vulnerable to inadvertent reentry and Shuttle explosion fragment environments. The results from the reentry thermal analysis (see Section 5.2.4.3) indicate that, if some reentry protection were applied directly to the container, it might survive the reentry environment and not burn up in the atmosphere. This reentry protection might take the form of a layer of non-reusable material such as insulation, and an ablative covering the outside of the container. Another approach to minimizing the chance for release is to select a waste form that will resist dispersion and/or minimize the amount of inhalable particles produced in an accident environment.

There are several significant modifications that may need to be made to the Space Shuttle system to decrease the hazards associated with the boost phase of the mission. One potential modification is placement of an energy and fragment absorbing shield between the payload and the likely locus of the External Tank explosion. A shield could have the effect of slowing down or stopping the high-speed fragments. Another possible modification would be the proposed incorporation of a payload ejection device, that would eject the nuclear waste package from the Space Shuttle Orbiter cargo bay prior to a catastrophic event.

The upper stages (OTV and SOIS) envisioned for the nuclear waste disposal mission remain conceptual at this point in time. It is appropriate, however, to suggest that they exhibit certain safety features, including: (1) multiple redundant communications and control systems, (2) communications links that would permit remote manual control, and (3) a system to monitor the OTV injection burn. The need for a rescue vehicle has also been confirmed.

5.5 Environmental Impact Assessment

The specific objective of the current environmental assessment was to study the health consequences posed by two accidents which are believed to be potentially the most hazardous and to identify how adverse consequences might be mitigated and/or eliminated. The two major accidents treated here are: (1) the on- or near-pad catastrophic Space Shuttle failure with a breach of defense nuclear waste containment, and (2) the reentry and upper atmospheric burnup of

a defense waste payload. Analysis was performed for both Savannah River and Hanford waste, assuming the baseline given in Section 5.2.

An in-depth "credible" environmental assessment of the baseline disposal concept is not possible until more work is done related to the response of designed containment systems to various accident environments. However, the analysis presented here, concerning the two accidents chosen for study, should be useful in choosing among containment designs and concepts, waste forms, and operational procedures.

5.5.1 On- or Near-Pad Catastrophic Space Shuttle Failure with Release of Defense Nuclear Waste Material

The on- or near-pad catastrophic Space Shuttle failure could result in the release of defense nuclear waste. The assessment presented here is based upon the use of: (1) the NASA/MSFC Multilayer Diffusion Model (MLDM) to provide time-integrated doses to individuals downwind from the event; and (2) BNWL's DACRIN Code, which provided the dose factors. A release of 55 kg of defense nuclear waste was arbitrarily assumed for the calculation ($\sim$1% of the 5500 kg of waste for each payload). However, health effects are presented parametrically for 1, 10 and 100% releases. Calculations were performed for both the Hanford and Savannah River waste. Three different meteorologies were employed (Sea Breeze, Fall and Spring) along with three activity median aerodynamic diameters (AMAD) for the radioactive particle dimensions (0.2, 1.0 and 5.0 μm). The area used to calculate the population dose was limited to 100 km from the Kennedy Space Center, Florida, launch pad (Launch Complex 39). Inhalation of resuspended particles and ingestion of contaminated food and water was ignored.

Dose commitments to individuals as a result of releases of Savannah River waste are shown in Figure 23 as a function of years after release. Doses to total body, bone, lung, liver and kidney are presented for activity median aerodynamic diameter (AMAD) particles of 1 μm and the Spring meteorological case. These data are for an individual 20 km downwind, at a location such that he inhales air containing the highest concentration of radionuclides that have dispersed to the ground level. It can be seen from the figure that the lung dose is delivered during the first 5 years following accidental release, whereas doses to other organs continue to rise as the radionuclides are transported through the body. The highest individual lifetime dose commitment is 300 millirem for the lung.

Results presented in Volume II of this report indicate that the 70-year lung dose commitment for Savannah River waste is greater than that for Hanford by a factor of roughly 100. However, the 70-year bone dose commitment is greater than that of Hanford by only a factor of 4.

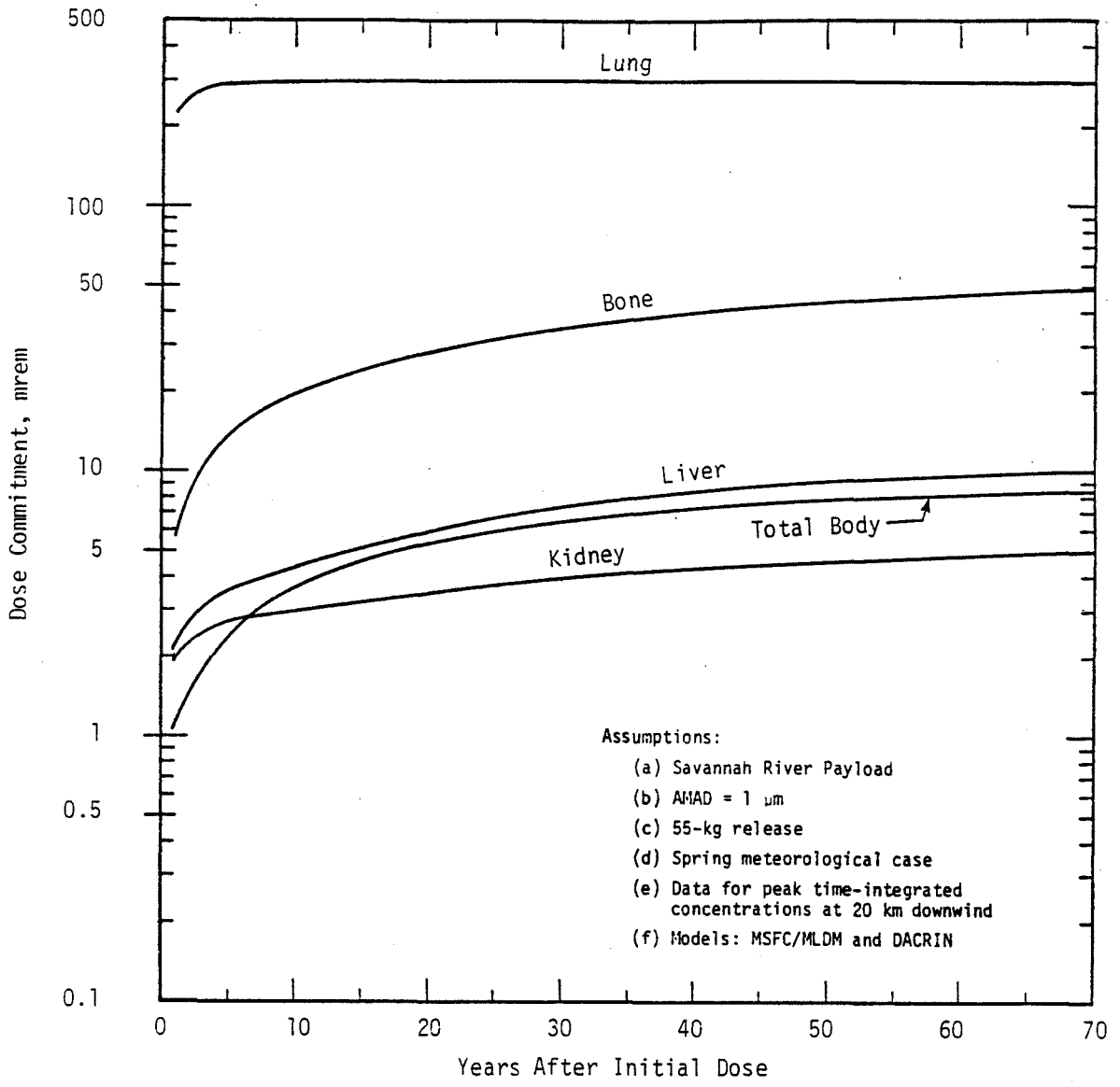

FIGURE 23. INDIVIDUAL DOSE COMMITMENTS FOR RELEASE OF SAVANNAH RIVER RADIOACTIVE WASTE AS A RESULT OF ON- OR NEAR-PAD SPACE SHUTTLE CATASTROPHIC ACCIDENT

The effects of particle sizes and meteorological conditions on total body, lung and bone dose were also determined. Variations in assumed particle sizes have more of an effect on lung doses than any other organ. The lung doses increase with decreasing particle size and doses to other organs decrease with decreasing particle size. The critical lung doses obviously could be reduced by choosing a waste form that would not allow the formation of small respirable particles. Doses also could be significantly reduced by employing launch constraints dealing with meteorological conditions. The most important parameter would be wind direction. For example, if wind is from the west, radioactive fallout from an on-pad accident would be transported out over the Atlantic, avoiding an accute exposure to local populations.

Population doses were calculated from time-integrated concentration and population data. The range was limited to 100 km because of the following three reasons: (1) the MSFC/MLDM, when used beyond 100 km, would create considerable uncertainty, (2) population data were available only out to 100 km, and (3) data indicate that most of the acute dose would be expected inside the 100-km distance.

Table 8 provides the 70-year population dose commitments in man-rems, calculated for Hanford and Savannah River wastes, for organs and tissues such as total body, kidneys, liver, bone and lung for three meteorological conditions, and for three particle sizes.

TABLE 8. POPULATION DOSE COMMITMENTS (70-YEAR) FOR DIFFERENT CONDITIONS AS A RESULT OF A 55-KG RELEASE (1%) OF WASTE PAYLOAD, DURING ON-PAD SPACE SHUTTLE ACCIDENT

Condition/ Waste	AMAD Value (μm)	Lung	Bone	Total Body	Kidneys	Liver
		man-rems				
Spring Meteorology Case						
Savannah River	0.2	23,000	2,400	370	300	660
	1.0	13,000	2,100	370	220	440
	5.0	6,000	2,600	520	210	360
Hanford	0.2	200	620	130	46	95
	1.0	110	610	130	29	59
	5.0	53	830	190	19	40
Fall Meteorology Case						
Savannah River	0.2	20,000	2,100	330	270	590
	1.0	12,000	1,900	330	200	400
	5.0	5,400	2,300	470	190	320
Hanford	0.2	180	560	110	42	85
	1.0	100	550	120	26	53
	5.0	47	750	170	17	36
Sea Breeze Meteorology Case						
Savannah River	0.2	260	27	4.2	3.4	7.6
	1.0	150	24	4.3	2.5	5.1
	5.0	69	30	6.0	2.4	4.1
Hanford	0.2	2.3	7.2	1.5	0.53	1.1
	1.0	1.3	7.0	1.5	0.33	0.68
	5.0	0.61	9.5	2.2	0.22	0.46

To determine the level of risk for the above scenarios, linear, non-threshold, health effects risk factors developed in the 1977 Draft Environmental Impact Statement for Management of Commercially Generated Radioactive Waste were employed. The ranges of health effects for a given organ or tissue were then determined from the ranges of population doses listed in Table 8, combined with the health risk factors, as shown in Table 9. Table 9 presents the ranges of health effects for different release percentages, particle sizes, meteorological conditions, and waste mixes.

TABLE 9. RANGES OF EXPECTED HEALTH EFFECTS FOR ON-PAD SHUTTLE FAILURE WITH RELEASE OF DEFENSE NUCLEAR WASTE MATERIAL

Type of Risk	Predicted Incidence per 10^6 man-rem[a]	Ranges of Expected Health Effects[b] Percent Release 1	10	100
Cancer deaths from:				
Total body exposure	50	0-1	0-1	0-3
Lung exposure	5	0-1	0-2	0-12
Bone exposure	2	0-1	0-1	0-1
Specific genetic effects to all generations from:				
Total body exposure	50	0-1	0-1	0-3

NOTES: (a) Health risk factors from 1977 Draft Environmental Impact Statement for Management of Commercially Generated Radioactive Waste.
(b) Data have been rounded off to nearest whole number.

The on-pad Space Shuttle failure and postulated release of 55-kg (1% release) of respirable-sized particles of defense nuclear waste, dispersed by a slow burn of the Space Shuttle SRB propellant, would be expected to result in less than one eventual cancer death and less than one eventual genetic defect to individuals outside the launch site area, based on the assumptions and analysis herein.

5.5.2 Reentry and Burnup of Defense Nuclear Waste Payload

This assessment is based on a model designed to provide estimates of world population doses due to inhalation of radioactive particles injected into the upper atmosphere (above 21 km) by the reentry and burnup of a defense nuclear waste payload. The model proposed by the ICRP Task Group on Lung Dynamics, as modified by ICRP Publication 19, was employed, as it provides the

best available basis for estimating internal radiation doses to human organs and tissues due to the inhalation of radioactive particles. As in the previous section, the activity median aerodynamic diameters (AMAD) for the radioactive particles were chosen to be 0.2, 1.0, or 5.0 μm. Also, the HASL model for atmospheric transport was employed for this analysis. Inhalation of radioactive particles descending into surface air is expected to account for the principal component of world population dose due to a reentry and burnup accident. External dose due to submersion in contaminated air and to radiation from particles deposited on environmental surfaces was ignored. The internal doses due to inhalation of resuspended particles and ingestion of contaminated food and water were also ignored.

Because it is assumed that the entire defense nuclear waste payload is converted to small, radioactive particles, the model will provide worst-case estimates of world population doses. The world population dose estimates given may be reduced appropriately if only a fraction of the waste payload is converted into small radioactive particles and if only a fraction of the particles are less than 10 μm in diameter.

Current ICRP recommendations concerning "dose limits for individual members of the public" indicate that the dose to lungs should not exceed "1.5 rems in a year" while the dose to bone should not exceed "3 rems in a year". Although the mean annual maximum individual dose rates that have been estimated here for individuals (0.0014 rem/year and 0.002 rem/year, respectively) are not precisely comparable to the ICRP limits, the differences do justify the conclusion that even the worst postulated reentry burnup accident would not expose any individual to a lifetime dose greater than the lifetime dose indicated by current recommendations concerning dose limits.

Estimates of the world population doses (in million man-rems) are summarized in Table 10 for the lung, bone, kidney, liver, and total body. Also indicated are data for different particle sizes and injection latitudes. The highest population doses are given for Savannah River waste in an injection latitude band between 35 to 45° N. The lung and bone doses are the most significant of the five organ doses.

Table 11 gives the number of health effects expected from the maximum and minimum estimates of world population doses presented in Volume II of this report. With respect to expected numbers of health effects due to the reentry and burnup of a nuclear waste payload, lung and bone appear to be the critical organs. The expected number of cancers due to lung exposure, based on the minimum and the maximum population dose estimate, is between 0 and 376 lung cancers, and between 4 and 266 bone cancers in a world population of about 3.34 billion. While the magnitude of the expected health effects indicated by this assessment is not catastrophic, the careful consideration of measures which would prevent or significantly reduce the burnup in the upper atmosphere and the production of particles less than 10 μm in diameter is extremely desirable.

TABLE 10. SUMMARY OF WORLD POPULATION DOSES FOR TOTAL BURNUP OF DEFENSE WASTE PAYLOADS

Condition/ Waste	AMAD Value (μm)	Lung	Bone	Total Body	Kidneys	Liver
		- - - - - - - million man-rems - - - - - - - - - - - -				
Injection at 35 to 45° N						
Savannah River	0.2	69.1	80.4	1.69	3.71	2.86
	1.0	38.8	84.2	1.71	3.73	1.79
	5.0	18.5	122	2.42	5.37	1.27
Hanford	0.2	1.54	32.1	0.637	0.970	0.552
	1.0	0.863	34.1	0.666	0.969	0.342
	5.0	0.413	50.2	0.969	1.39	0.234
Injection at 5° N to 5° S						
Savannah River	0.2	37.1	43.1	0.904	1.99	1.54
	1.0	20.8	45.2	0.916	2.00	0.963
	5.0	9.95	65.7	1.30	2.88	0.681
Hanford	0.2	0.825	17.2	0.341	0.520	0.296
	1.0	0.463	18.3	0.357	0.520	0.183
	5.0	0.221	26.9	0.520	0.746	0.125
Injection at 35 to 45° S						
Savannah River	0.2	10.2	11.9	0.250	0.550	0.424
	1.0	5.74	12.5	0.253	0.552	0.266
	5.0	2.75	18.1	0.359	0.795	0.188
Hanford	0.2	0.228	4.75	0.094	0.144	0.082
	1.0	0.128	5.05	0.099	0.143	0.051
	5.0	0.061	7.43	0.144	0.206	0.035

NOTE: Data in Volume II - Tables 6-19 and 6-20 - assume additional organs and injection latitudes.

TABLE 11. RANGES OF EXPECTED HEALTH EFFECTS FOR PAYLOAD REENTRY BURNUP

Type of Risk	Predicted Incidence per 10^6 man-rem[a]	Ranges of Expected Health Effects[b] Percent Release 1	10	100
Cancer deaths from:				
Total body exposure	50	0-2	0-14	2-132
Lung exposure	5	0-4	0-38	0-376
Bone exposure	2	0-3	0-27	4-266
Specific genetic effects to all generations from:				
Total body exposure	50	0-2	0-14	2-132

NOTE: (a) Health risk factors from 1977 Draft Environmental Impact Statement for Management of Commercially Generated Radioactive Waste.
(b) Data have been rounded off to nearest whole number.

5.6 Licensing Requirements

This section discusses the licensing and policy questions which must be answered before proceeding with the space disposal option. The primary areas of concern in developing the space disposal option are:

- Development and construction of the waste treatment and payload fabrication preparation facilities
- Development and construction of the launch site facilities (NPPF)
- Development of standards, criteria, and regulations for the space disposal option
- Major policy decisions required to allow the space option to proceed.

The interaction of these major areas is shown in Figure 24. The requirements for environmental impact statements and NRC licenses are included in the figure, since an NRC license is expected to be required for certain aspects of all systems of HLW disposal.

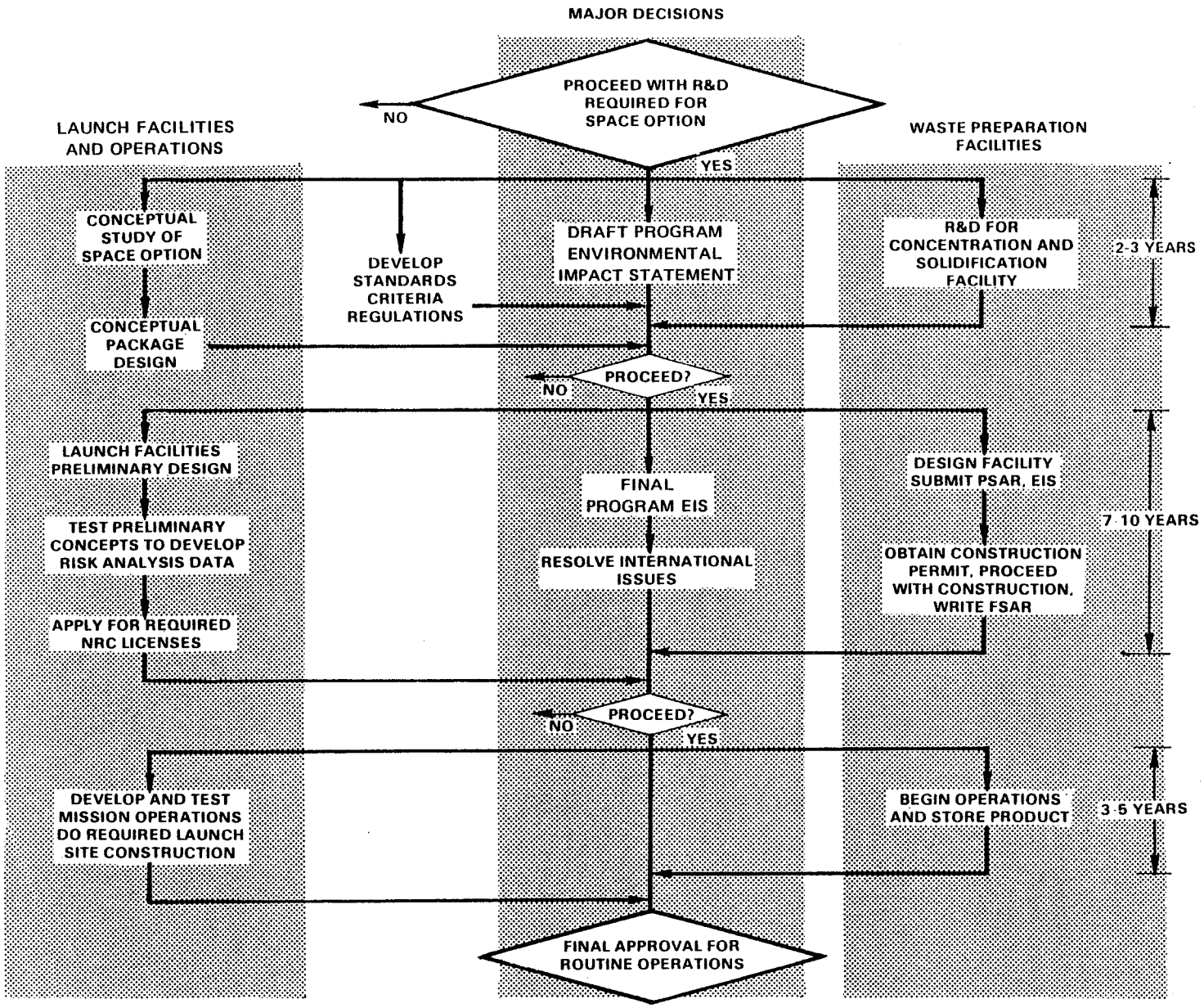

FIGURE 3-1. INTERACTION OF LICENSING WITH OTHER MAJOR DECISION AREAS

5.6.1 Waste Treatment and Payload Fabrication Facilities

The waste treatment and payload fabrication facilities include the system for recovery of the liquid wastes from storage, concentration of the waste to an allowable or economic specific activity, solidification of the waste, and loading of the waste in a specified container. This system would be much like the systems anticipated to be used in fuel reprocessing plants. Since these facilities must be integrated with each other, it is expected that they will be contained in a single building or complex of buildings and be licensed as a single system. The criteria for the payload would be specified by the environmental and technological considerations of the disposal operation.

Since the defense HLW is stored at DOE sites, it is expected that the waste treatment and payload fabrication facilities would be built at the site where the waste is located. The facilities would be owned by DOE and likely be operated by a DOE contractor. Currently, such DOE-owned contractor-operated facilities do not require NRC operating licenses or construction permits; however, this discussion is concerned with the types of licenses which may be required.

Since the waste treatment and payload fabrication facilities are much like a fuel reprocessing plant, such facilities would be licensed under regulations written in 10 CFR 50.* Additional requirements not presently contained in the regulations could be added as an additional Appendix to 10 CFR 50. Also, if safeguard requirements are needed, these are written in 10 CFR 73.

The facilities would go through the standard licensing process, with a construction permit first being obtained, and finally, an operating license. Both preliminary and final safety analysis reports would be required and the appropriate reviews would be carried out by the NRC. Specific procedures would be dependent on the regulations in force at the time of application.

5.6.2 Overland Shipment

The overland shipment of the waste payload containers from the waste treatment and payload fabrication facilities to the launch site are not addressed in any detail here. Regulations for radioactive materials shipments currently exist and shipping containers, casks, can be licensed under the applicable regulations, 10 CFR 71. It should be noted, however, that the NRC does not currently license DOE casks, but DOE casks are built to NRC licensing requirements. It is expected that the NRC will, at some time in the future, license all shipping containers for radioactive materials. The licensing and development of a shipping cask will take 3 to 5 years. Although this type of license is a standard one, the changing regulations are requiring new types of testing to prove the integrity of casks. The primary requirement will be the need to know what the cask contents will be.

*NOTE: Existing United States Nuclear Regulatory Commission (NRC) regulations are quoted frequently in this section. 10 CFR 50 refers to Chapter 50, Title 10, Code of Federal Regulations - Energy.

5.6.3 Launch Site Facilities and Operations

The launch facilities include the Nuclear Payload Preparation Facility (NPPF), a ground transport system, and Space Shuttle system including the mission operations and recovery system. There are two views on the licensing aspects of the launch site facilities and operations. The first (Option I) is to view the launch site facilities and operations as a total system, as one would a reactor or fuel reprocessing facility. The second (Option II) is to view the launch facilities as a site with a radioactive materials license and the Space Shuttle as a transport vehicle carrying a licensed transportation payload.

The licensing of the launch site facilities and operations as a system (Option I) will require a new type of NRC license. The launch site facilities do not present a unique problem, but the licensing of a space flight mission is unique. Previously, nuclear payloads flown on space missions have not been licensed, but have been approved by the president, after extensive reviews have ensured adequate safety. This procedure is not expected to be used for space disposal of nuclear waste. A license for space disposal missions would have to require compliance with specifically defined procedures and would limit the ability of the crew to handle unanticipated problems. However, space flights could be simulated ahead of time so that proper specific procedures could be implaced. In addition, the mission could be practiced using simulated waste containers and actual space flight to test all operations.

The specifications and regulations for the NPPF and its operations, and transporting the payload at the launch site could be handled by current regulations. A more difficult problem is encountered when an analysis of the launch system is attempted. The question arises as to whether the launch vehicle and waste payload can be analyzed together as one system.

Current regulations require the radioactive material containing package to withstand the postulated accident conditions. Mitigation of accident effects due to the presence or structure of the transport vehicle is not allowed. For example, the absorption of impact by the vehicle is not allowed to reduce the level of impact that would be seen by the cask if the vehicle were not present.

Option I may be the least controversial because more of the total operation would be included under direct NRC license control. Also, this would be a two-phase licensing process with a review prior to any significant testing similar to a construction permit and then a final review before operation with actual waste material after cold testing of the system. However, this does imply that new and separate launch facilities will be required for HLW transport than are already available for other Space Shuttle operations.

The licensing of a site for possession and handling of radioactive material and the licensing of a container for shipping materials (Option II) are the methods currently used in the regulations. Operations at the NPPF are expected to be simpler than those carried out in many hot cells. The ground transport at the launch site would be allowed under the special nuclear materials license granted under 10 CFR 70. Vehicles and containers for launch site ground transport by a licensee are not licensed. The licensee must, however, comply with the radioactivity release and exposure regulations of 10 CFR 20.

By looking at the Space Shuttle as a simple transport vehicle, such as a plane or truck, the current procedure, as applied, would be to license the payload for shipment in the Shuttle. Obviously, a new set of design criteria would have to be set up so that the payload and its contents would perform as intended under anticipated accident conditions such as a launch accident or unplanned reentry. The payload would be licensed under 10 CFR 71, which would have been amended to satisfy the criteria for space transport.

The licensing process would have to be examined closely since the types of licenses involved in Option II do not normally involve the degree of public participation as is involved in 10 CFR 50 licenses. An extra effort would be needed regarding policy and environmental impact to assure public participation in the decision-making process, or the license proceeding would have to assure such participation.

The development of criteria for the launch facility and operation could be a major factor in determination of the economic feasibility of the space option. These criteria may include specific limits on allowed radioactive release due to accidents and limits on the variation of the ultimate solar orbit of the waste payload. The level of risk will surely be a very important factor. The criteria on mission operations will have to be set up so that the consequences from most credible accidents will be extremely small. The possible impact of criteria on the design of system and mission operations should be examined early in the program so that potential design concepts can be examined. Therefore, criteria should be developed as soon as possible.

5.6.4 Major Policy Questions

Several major policy decision points will occur during the development of the space option. The first of these is a decision to proceed with the research and development required for the space option. If this decision is positive, the research required to develop the waste treatment processes for the concentration, solidification, and payload fabrication should proceed. Also, the standards, criteria, and regulations should be drafted. In conjunction with this, a draft environmental impact statement for the program should be prepared. A conceptual study of the space option should be made as well as conceptual designs of the total payload system to be carried into space on board the Space Shuttle.

Based on the information obtained, the actual construction of waste treatment and payload facilities could begin. The preliminary design of NPPF could be prepared to comply with the criteria already set up. A final program EIS on space isolation would be prepared and international issues would be identified and resolved. The discussion and resolution of international questions is critical since final disposal would not be on U.S. territory. One solution may be to make space disposal operations an international venture; that is, to allow all nations to use this method for radioactive waste disposal. Testing of systems such as reentry, dockings, and rescue systems must be carried out. These tests would allow a quantification of risk and consequences.

The next decision would be to develop and test the complete mission operation. Required launch site facility construction would begin and final testing would be completed. These would lead to the final approval of routine space disposal operations.

5.7 Flight Test Requirements

The unique nature of the space disposal mission and the expected high public concern over possible release of nuclear material will likely lead to a requirement for extensive testing. This testing is expected to take several forms, including ground-based tests, flight tests of specific hardware items and an all-up flight test of the entire space disposal mission. The test approach and requirements are interrelated with the licensing approach discussed in Section 5.6.

Two concepts dominate the proposed test philosophy. First, the test program should be as extensive as practical to maximize public confidence and system safety. This approach will likely result in a costly test program, but, within reasonable limits, costs must be secondary to system safety in the space disposal mission. Therefore, an extensive set of ground-based tests and a number of more complex flight tests are expected.

The second concept governing testing is that there is no apparent reason why any actual nuclear waste would need to be flown in space prior to the beginning of actual operations. Most tests of the container survivability with a waste payload would be conducted on the ground. Necessary flight tests of loaded containers could be conducted using simulated waste with an appropriate tracer material to monitor any release and dispersion.

Three categories of tests are anticipated: ground-based tests, flight tests of specific items and all-up system flight tests. A number of specific test requirements for each category are identified below. Additional test items are expected to be identified as the program develops.

5.7.1 Ground-Based Tests

As discussed in Section 5.6, Licensing Requirements, the primary licensing emphasis is expected to be on insuring the survivability of the container under a wide range of potential accident conditions. A number of these accident conditions can be simulated in ground tests and compliance thereby demonstrated. Based on the data of Volume II, ground tests to demonstrate container survival under the following conditions would be expected:

- Ground fires from the SRM (both from propellant fragments and split motor cases)
- Blast wave overpressure and blast fragment impacts from ET explosion
- Ground and water impacts to simulate terminal conditions from reentry and abort.

Preliminary ground-based testing of subscale payload models for various portions of the reentry environment can and should be conducted. Such tests could give preliminary evidence of payload survival and could be used to define the likely severest cases to allow actual flight tests to be reduced to the minimum needed.

A second set of expected ground-based tests would be aimed at the waste material rather than the containment systems. Resistance to dispersion and formulation of inhalable particles are expected to be major criteria for selection of the final waste form. An extensive set of ground-based tests are expected to be conducted as a part of this selection process, and to demonstrate that the final waste form has the desired characteristics.

A final set of expected ground tests concerns the transportation and handling of the nuclear waste prior to launch. It is expected that tests will be required to demonstrate payload intact survival under these various conditions (e.g., ground transport delay combined with loss of primary cooling, dropping of the payload in the NPPF).

5.7.2 Flight Tests of Selected Systems

A number of specific subsystems will need to be flight tested separately prior to an overall flight demonstration of the entire waste disposal system. Three systems will need to receive specific attention: payload/container survival, payload exchange mechanisms operation, and remote rendezvous/docking.

If the current baseline two-Shuttle launch profile for the waste disposal mission holds, an on-orbit payload exchange between the Orbiter and the OTV will be required. If the reentry protection system and associated shielding is to be removed prior to OTV burn (which has been assumed in all the options considered in this particular study), a mechanism for removal of these systems will be required. In both of these cases, demonstration of the operation of these mechanisms under space conditions will be required.

The final set of special flight tests would be of the remote rendezvous and docking capabilities. Since the reuse plans all are based on the use of a second OTV, the OTV and a simulated payload would be the primary test items. The tests would require at least two Shuttle launches, one for the OTV and one for the payload. The required rescue mission could take place in either near-Earth or distant locations. Both cases need to be demonstated. Near-Earth rendezvous and docking would likely use a man-in-the-loop system with continuous control. Distant rendezvous and docking would have to use an on-board autonomous system with limited ground override capabilities.

5.7.3 All-Up Test Flight

Prior to final operating license approval, it is expected that an all-up flight test of the entire space disposal system will be required. The test would be designed to demonstrate the nominal disposal mission profile. However, it is likely that the system will also have to demonstrate its ability to discover and

correct unexpected system problems. In the case of the all-up flight test, this would likely take the form of several planned simulated system failures or anomalies (e.g., an initially misoriented OTV burn which would need to be detected and terminated, with the OTV reoriented for a proper injection burn). These failures would be known to the program test managers, but not to the flight control personnel responsible for conducting the test flight. Successful demonstration of the mission profile while overcoming the unexpected anomalies would be a major step in satisfying NRC and other regulatory requirements and in increasing public confidence in space disposal. One such flight (if successful) would be expected to be required.

5.7.4 Test Schedule

The schedule for testing is correlated with the licensing and overall decision schedule shown in Figure 24. The primary test period will be during the 7-10 year period following the decision to begin major development of the waste disposal system. Some of the ground-based testing would need to occur prior to this period, and the all-up flight tests would be conducted in the 3-5 year period of final development prior to initiation of disposal operations. The expected schedule is shown below in Figure 25. The nominal date of proceeding with the R&D has been 1979, but is subject to change depending upon budgetary constraints.

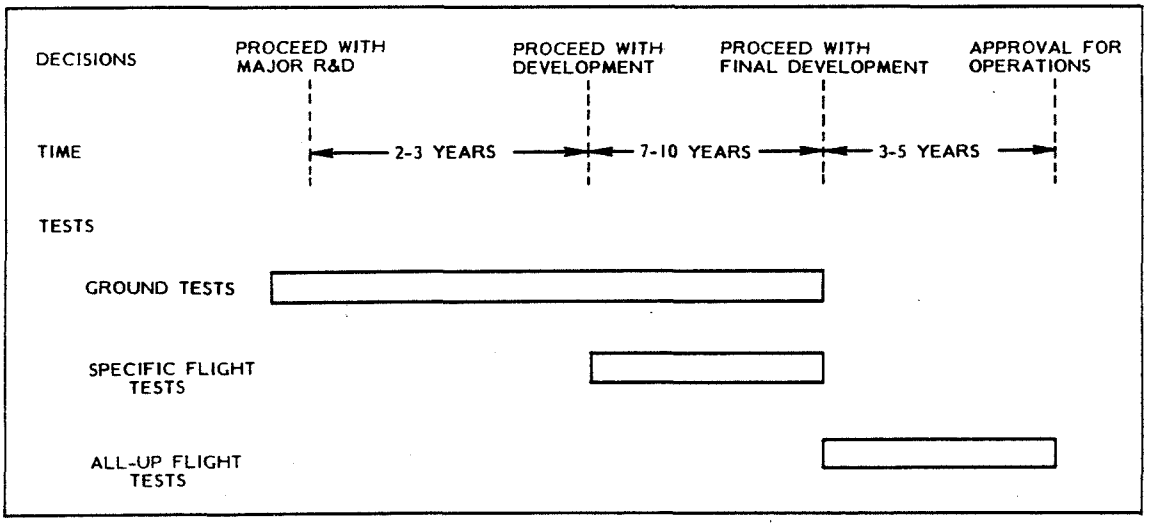

FIGURE 25. EXPECTED TEST SCHEDULE

5.8 Conclusions

The more significant conclusions reached during this study are summarized below:

- The mass of defense wastes stored at the three repositories is large (10^6-10^7 kg each, following preliminary preparation).

- The Hanford wastes exist in several forms, while the Savannah River and Idaho wastes are more uniform.

- The data on Hanford and Savannah River wastes are more complete than for Idaho. For space disposal purposes, the Hanford and Savannah River wastes are expected to be roughly similar.

- Chemical processes for concentration of defense wastes have been postulated but the supporting data base is limited and is generally based on laboratory experiments.

- The postulated concentration processes would reduce the number of required Shuttle flights to a manageable level (~ 100 to 400 flights for disposing of the projected year 2000 inventory). Even in concentrated form, defense wastes are considerably more dilute than projected commercial wastes, resulting in radioactivity, neutron emissions and heat outputs that are two to three orders of magnitude less than for commercial waste.

- There are a number of waste forms that would be suitable for space disposal. Based on the study results to date, it appears that minimizing waste release under accident conditions will be a major consideration in waste form selection.

- Development of a suitable container appears to be feasible. Thermal control and shielding are manageable and not a major design problem. Minimizing waste release under credible accident conditions must be a major consideration.

- Of the various accident conditions examined, the fragments due to External Tank explosion and the thermal environment during reentry of an unprotected container present the greatest problems. Provision of sufficient additional protection to ensure container survival under these two conditions will be necessary and is probably feasible but has not been examined in detail.

- Recovery of a payload following an incomplete or misdirected OTV insertion burn is feasible provided that the perigee of the resulting orbit is high enough to allow time to conduct the mission with a second OTV. This condition can be met if grossly misoriented (off by 30° error or more) OTV burns can be avoided or terminated easily. Under some conditions the failed OTV and the SOIS can be returned also. Under extreme conditions, boosting of the payload to a higher Earth orbit for later recovery is feasible even when Shuttle orbit return is not.

- Many of the failure modes identified have one or more potential workarounds in terms of backup systems, design changes or approaches, and procedures. In particular, workarounds for both the inadvertent reentry and ET explosion have been identified. Future detailed design activities may well uncover additional workarounds.

- The environmental impacts for two credible accidents have been examined in detail. The health risk from release of nuclear waste material in the upper atmosphere is greater than that from on-pad failure. The on-pad risk can be reduced further by imposing launch constraints based on meteorological conditions.

- The imposition of launch constraints based on meteorological conditions could result in delays of the launch of the Shuttle carrying the nuclear waste payload. If this Shuttle is launched second (as in the current baseline), this delay could significantly affect the chances of mission success.

- Under the worst case postulated conditions, a total release of a nuclear waste payload in the upper atmosphere would be a significant accident. The consequences would be spread worldwide. Measures to reduce the precentage release or the percentage of inhalable particles would mitigate expected adverse effects.

- Three SR&T development activities to support nuclear waste disposal in space will be required. These are in the areas of nuclear waste characterization, waste form thermal response and remote rendezvous and docking. A fourth potential area involving long-term materials behavior in the space environment may also be required.

- A preliminary approach to the licensing of space disposal of nuclear waste has been developed. The recommended approach would involve NRC licensing of the waste preparation facility, the Nuclear Payload Preparation Facility (NPPF) at KSC, and the nuclear waste payload.

- A preliminary test plan covering ground tests, special flight tests and an all-up system flight test has been developed. Space disposal is expected to require extensive development and demonstration tests, some of which will need to be structured to demonstrate system ability to detect and correct failures.

6.0 STUDY LIMITATIONS

The study ground rules (see principal assumptions - Section 4.0) define most of the limitations for this study. In this concept definition phase of the space disposal program, many of the interfacing systems and data bases are constantly changing. Results based upon data such as these are necessarily limited by the point at which these data were fixed. Also, results are limited by the many assumptions that need to be made, such that the problem is manageable. More sophisticated studies and analysis are expected in future efforts.

For the characterization of defense high-level waste payloads, the results are especially limited by the definition of the waste to be carried and disposed of in space. A considerable amount of work remains to establish a more complete and justified data base for the defense nuclear waste. Containment analysis, while providing preliminary results, is limited to the degree that the waste composition and form are defined and by certain model assumptions. It is hoped that future efforts will provide the proper data and more complete modeling, such that containment systems can be designed to match the waste that actually will be available for space disposal.

The safety assessment was limited significantly by the lack of reliability data for containment systems, the Space Shuttle vehicle, and upper stages. The fault trees developed can be used to establish overall risk once reliability and consequence data become available.

The environmental impact assessment of the major accidents considered did not include the effects of atmospheric resuspension of fallout particles. Also, the predicted radiation doses for the on-pad failure are limited by the fact that doses were only calculated out to 100 km from the launch pad.

Any analysis is limited by the assumptions made. The reader is urged to read the detailed text of the report (Volume II) to ensure knowledge of all the assumptions that have been made during this study.

7.0 IMPLICATIONS FOR RESEARCH AND TECHNOLOGY

This section summarizes information contained in Volume III that relates to the supporting research and technologies required for the space option of defense nuclear waste disposal.

A 3-year R&D development plan for space disposal has been defined which identifies the various design and technology development activities required prior to a decision to proceed with development. As a part of that plan, a general listing of areas requiring either technology development, testing or both was developed (see "Critical Technology Experiments/Testing Plan" of Appendix B of Volume III). The required technology developments which will have to be undertaken as a part of the supporting research and technology (SR&T) program for space disposal of nuclear waste are summarized below.

A distinction needs to be made between technology developments and design problems. Many of the elements of the space disposal system (OTV, SOIS, container, docking system, etc.) do not currently exist, and would need to be designed, developed and tested. However, none of these developments would necessarily require the creation of any new technology. As an example, the OTV and SOIS would use hydrogen/oxygen and storable liquid propellants, respectively. The technology for both of these propellants is well developed and systems using them have been built and flown operationally (e.g., Centaur for H_2/O_2, Viking for storable propellants). This discussion concentrates on those areas where such technology is not presently available and needs to be developed as part of the overall program.

It has been stated that space disposal of nuclear waste is primarily an engineering problem, based largely on existing technology. This statement is substantiated by the material of this discussion. Only four primary areas of technology development have been identified, and for one of these, it is not certain at this time that it is needed. The three areas where technology development is definitely needed are:

- Waste concentration processes
- Waste form thermal response
- Remote automated rendezvous and docking.

The fourth area where new technology may be needed is the long-term behavior of materials in a deep space environment.

7.1 Waste Concentration Processes

The status of defense nuclear waste concentration processes is discussed in detail in Section 3 of Volume II. Defense nuclear waste currently exists in large quantities of dilute materials in storage at three different sites in the United States. Preliminary treatment processes have been defined for these wastes which would be suitable for terrestrial disposal, but which would not give adequate concentration for space disposal. Unless adequate concentration can be achieved, the number of flights required may be

prohibitive. Processes for further concentration have been defined, but are based on laboratory scale experiments and have not been verified as applicable in the scale envisioned. Further definition and demonstration of these proposed processes is required.

7.2 Waste Form Thermal Response

Preliminary definition of potential defense nuclear waste forms has been accomplished (see Section 3 of Volume II). Some of these forms are well developed (e.g., calcine) while other forms have received less attention (e.g., compartmented calcine and metal matrix). At the present time, a final choice of waste form cannot be made. Preliminary accident analyses indicate that the defense waste payload may be subjected to severe thermal environments, which could lead to release of nuclear waste. The environmental effects of these accidents could be reduced significantly if the waste form were resistant to dispersion under these severe thermal environments and if the waste form were such that the dispersed material contained a minimum number of inhalable particles. Further development of the characteristics of these forms is required, particularly regarding thermal and dispersion characteristics.

7.3 Remote Automated Rendezvous and Docking

Various portions of the contingency plans for space disposal of nuclear waste would require a remote rendezvous and docking capability (e.g., rescue of a payload from an unplanned orbit). NASA has never conducted an automated rendezvous and docking. However, the Soviets have conducted numerous automated dockings in near Earth orbits, and some proposed NASA planetary missions (e.g., Mars surface sample return) could require distant automated rendezvous and docking. Although some of the hardware elements required for this operation may already exist (e.g., transponders, aircraft-type search radars), a complete demonstrated technology will be necessary.

7.4 Long-Term Behavior of Materials in a Deep Space Environment

The state of knowledge of materials behavior under long-term space exposure is currently quite limited. Some knowledge of behavior over short periods ot time (5-10 years) has been gained through operational spacecraft experience and special events such as the reexamination of Surveyor by the Apollo astronauts. Further such experience is expected from the Long Duration Exposure Facility (LDEF). No data exist for the lengths of times discussed for solar orbit residence of nuclear waste (100,000 to 1,000,000 years). It is not clear that a program to develop materials resistant to a long-term space environment is required. If it is shown that early release of waste material in solar orbit would constitute a significant risk to the Earth environment, a program to develop such materials would be needed to help ensure overall system safety.

8.0 SUGGESTED ADDITIONAL EFFORT

Prior to any development or implementation decision on space disposal of nuclear waste, certain critical problems will have to be addressed by NASA and DOE. The general areas requiring effort are defined in Volume III of this report. Some specific recommendations concerning the technical areas discussed in this report are summarized below:

- Further definition of the defense nuclear waste radionuclide composition (particularly for Idaho calcine) is needed (DOE)*
- Definition and demonstration of nuclear waste concentration methods is required for all three waste sources (DOE)
- The characteristics and behavior of compartmentalized calcine and metal matrix under credible accident conditions as a means for reducing radionuclide release should be examined further (DOE)
- The behavior of the waste container in the blast fragment environment and potential means of additional protection need to be studied in more detail (NASA)
- The possibility of protecting the unshielded container during inadvertent reentry by addition of a layer of ablative material to the outer wall should be considered (NASA)
- Methods for detecting and terminating a critically misdirected OTV Earth escape insertion burn and payload safety or rescue need to be developed (NASA)
- Failure modes potentially leading to External Tank explosion should be examined further and any potential workarounds or mitigation measures defined (NASA)
- Quantitative reliability data need to be developed for all elements of the space disposal mission (NASA)
- Methods for reducing the number of inhalable particles produced during an on-pad accident or inadvertent reentry need to be examined (DOE)
- The health effects from particle resuspension and ingestion require further study (NASA)
- The effect on overall mission probability of success and safety of launching the waste payload first rather than second needs to be evaluated (NASA).
- Complete systems studies for the space disposal concept need to be accomplished (NASA/DOE).

*Parenthetic notation after each recommendation indicates prime agency responsibility.

APPENDIX A

ACRONYMS AND ABBREVIATIONS

APPENDIX A

ACRONYMS AND ABBREVIATIONS

a.u.	astronomical unit
AMAD	activity median aerodynamic diameter
B.R.	burn rate
C	degrees centigrade
C_3	twice the energy per unit mass
CANDU	Canadian deuterium uranium reactor
cc	cubic centimeters (cm^3)
CFR	Code of Federal Regulations
Ci	Curies
μCi	micro-Curies
cm	centimeters
COE	center of explosion
CPIA	Chemical Propulsion Information Agency
DOE	U.S. Department of Energy
DOT	U.S. Department of Transportation
EIS	environmental impact statement
ERDA	U.S. Energy Research and Development Administration
ET	Space Shuttle's External Tank
FSAR	final safety analysis report
g	grams
gal	gallons (U.S.)
HLW	high-level waste
H_2/O_2	hydrogen-oxygen
HTGR	high-temperature gas-cooled reactor
ICRP	International Commission on Radiological Protection
kg	kilogram
km	kilometer
KSC	Kennedy Space Center, Florida
kW	kilowatt
LMFBR	liquid metal fast breeder reactor
LWR	light water reactor
m	meters

μm	micrometers
m/s	meters per second
MT	metric tons
MLDM	Multilayer Diffusion Model (MSFC's)
MSFC	NASA's Marshall Space Flight Center, Huntsville, Alabama
N	Newtons
N/cm^2	Newtons per square centimeter
NASA	National Aeronautics and Space Administration
NEP	nuclear electric propulsion
NPPF	Nuclear Payload Preparation Facility
NRC	Nuclear Regulatory Commission
OTV	Orbit Transfer Vehicle
P	pulmonary
PCR	Payload Changeout Room
PSAR	preliminary safety analysis report
rem	roentgen equivalent, man
R&D	research and development
RETAC	Reentry Thermal Analysis Code
SEP	solar electric propulsion
SOIS	Solar Orbit Insertion Stage
SRB	Solid Rocket Booster (Shuttle)
SRM	Solid Rocket Motor (Shuttle)
SSP	solar sail propulsion
STS	Space Transportation System
ΔV	change in velocity
W	Watt
WCF	waste concentration factor

APPENDIX B

METRIC/ENGLISH CONVERSION FACTORS

APPENDIX B

METRIC/ENGLISH CONVERSION FACTORS

To convert	into	multiply by
atmospheres (atm)	pounds per square inch (psi)	14.70
atmospheres (atm)	pounds per square ft (psf)	2116.8
calories (cal)	British thermal units (Btu)	3.9685×10^{-3}
calories per gram (cal/g)	British thermal units per pound (Btu/lb)	1.80
centimeters (cm)	inches (in)	0.3937
centimeters (cm)	feet (ft)	3.281×10^{-2}
centimeters (cm)	yards (yd)	1.094×10^{-2}
cubic centimeters (cm^3)	cubic inches (m^3)	0.0610
cubic meters (m^3)	cubic feet (ft^3)	35.32
cubic meters (m^3)	gallons (gal)	264.2
degrees Centigrade (^oC)	degrees Fahrenheit (^oF)	1.8 C + 32*
degrees Kelvin (^oK)	degrees Rankine (^oR)	1.8
grams (g)	pounds (lb)	2.205×10^{-3}
kilograms (kg)	pounds (lb)	2.205
kilometers (km)	statute miles (mi)	0.6214
kilometers (km)	nautical miles (n.mi.)	0.540
kilometers (km)	feet (ft)	3281
kilowatts (kW)	Btu per hour (Btu/hr)	3413
meters (m)	inches (in)	39.37
meters (m)	feet (ft)	3.281
meters (m)	yards (yd)	1.094

*NOTE: Multiply by 1.8 and then add 32.

To convert	into	multiply by
meters per second (m/s)	feet per second (ft/s)	3.281
metric tons (MT)	pounds (lb)	2205
metric tons (MT)	tons (T)	1.102
micro-meters (μm)	meters (m)	1.0×10^{-6}
Newtons (N)	pounds force (lb_f)	0.2248
Newtons per cm^2 (N/cm^2)	pounds per square inch (psi)	1.4504