N O T I C E

THIS DOCUMENT HAS BEEN REPRODUCED FROM MICROFICHE. ALTHOUGH IT IS RECOGNIZED THAT CERTAIN PORTIONS ARE ILLEGIBLE, IT IS BEING RELEASED IN THE INTEREST OF MAKING AVAILABLE AS MUCH INFORMATION AS POSSIBLE

OLD DOMINION UNIVERSITY RESEARCH FOUNDATION

DEPARTMENT OF ELECTRICAL ENGINEERING
SCHOOL OF ENGINEERING
OLD DOMINION UNIVERSITY
NORFOLK, VIRGINIA

A SUMMARY OF SPECTRAL SYNTHESIS PROCEDURES FOR MULTIVARIABLE SYSTEMS

By

S. R. Liberty

R. R. Mielke

and

R. A. Maynard

Principal Investigator: S. R. Liberty

Final Report
For the period May 1, 1978 - September 15, 1979

Prepared for the
National Aeronautics and Space Administration
Langley Research Center
Hampton, Virginia 23665

Under
NASA Grant NSG 1519
Martin T. Moul, Technical Monitor
Flight Dynamics and Control Division

DEC 1979
RECEIVED
NASA STI FACILITY
ACCESS DEPT.

November 1979

(NASA-CR-162436) A SUMMARY OF SPECTRAL SYNTHESIS PROCEDURES FOR MULTIVARIABLE SYSTEMS Final Report, 1 May 1978 - 15 Sep. 1979 (Old Dominion Univ. Research Foundation) 31 p HC A03/MF A01 CSCL 12B G3/66

N80-11862

Unclas
46109

DEPARTMENT OF ELECTRICAL ENGINEERING
SCHOOL OF ENGINEERING
OLD DOMINION UNIVERSITY
NORFOLK, VIRGINIA

A SUMMARY OF SPECTRAL SYNTHESIS PROCEDURES FOR MULTIVARIABLE SYSTEMS

By

S. R. Liberty

R. R. Mielke

and

R. A. Maynard

Principal Investigator: S. R. Liberty

Final Report
For the period May 1, 1978 - September 15, 1979

Prepared for the
National Aeronautics and Space Administration
Langley Research Center
Hampton, Virginia 23665

Under
NASA Grant NSG 1519
Martin T. Moul, Technical Monitor
Flight Dynamics and Control Division

Submitted by the
Old Dominion University Research Foundation
P. O. Box 6369
Norfolk, Virginia 23508

November 1979

TABLE OF CONTENTS

	Page
ABSTRACT	iii
DISCUSSION	1
APPENDIX A: A NEW SPECTRAL SIGNATURE PROCEDURE FOR MULTIVARIABLE REGULATORS	3
APPENDIX B: DESIGN OF ROBUST STATE FEEDBACK CONTROLLERS VIA EIGENVALUE/EIGENVECTOR ASSIGNMENT	12
APPENDIX C: DESIGN OF A TURBOJET ENGINE CONTROLLER VIA EIGENVALUE/EIGENVECTOR ASSIGNMENT: A NEW SENSITIVITY FORMULATION	18
APPENDIX D: DESIGN OF A ROBUST MULTIVARIABLE PROPORTIONAL PLUS INTEGRAL CONTROLLER VIA SPECTRAL ASSIGNMENT	20
REFERENCES	26

ABSTRACT

A new approach to the eigensystem assignment problem is presented. The approach utilizes a null-space formulation of the eigenvalue/eigenvector assignment problem to simultaneously realize arbitrary eigenvalue specifications, approximate desired modal behavior, and achieve low eigensystem sensitivity with respect to plant parameter variations. The methods are applied to the design of regulator and integral plus proportional servo control systems.

A SUMMARY OF SPECTRAL SYNTHESIS PROCEDURES FOR MULTIVARIABLE SYSTEMS

By

S.R. Liberty[1], R.R. Mielke[2], and R.A. Maynard[3]

DISCUSSION

State space-oriented procedures provide significant design advantages over classical control design methods for flight control systems. Several procedures involving the synthesis of multivariable systems based on eigenvalue-placement criteria have previously been developed (refs. 1 to 3). Eigenvalue specifications alone do not characterize the actual variable response of a system, however. The eigenvector corresponding to a given eigenvalue determines the influence of that eigenvalue on the state variable response (ref. 4). Thus, satisfying modal matrix specifications is as important as achieving eigenvalue specifications in designing a feedback system.

The multivariable design problem can therefore be approached as an eigenvalue/eigenvector assignment problem (refs. 5, 6). This approach has led to a null-space formulation of the problem (ref. 7). All possible modal matrices related to a given eigenvalue specification have been shown to lie in the null space of a corresponding matrix. A desired modal matrix is projected onto this null space, yielding the closest approximation to the desired modal matrix that is actually realizable.

System sensitivity to plant parameter variations is then reduced local to the modal matrix obtained from this projection (ref. 8). This is done by performing a gradient search within the null space for a modal

---

[1]Professor and Chairperson, Department of Electrical Engineering, Old Dominion University, Norfolk, Virginia 23508

[2]Associate Professor, Department of Electrical Engineering, Old Dominion University, Norfolk, Virginia 23508

[3]Graduate Research Assistant, Department of Electrical Engineering, Old Dominion University, Norfolk, Virginia 23508

matrix that minimizes a sensitivity cost function and that lies near the modal matrix first obtained.

The null-space formulation of the eigenvalue/eigenvector assignment problem is applicable to the design of regulator and servo control systems (refs. 9 and 10). Dynamical compensators or observers (ref. 11) are used to realize the integral plus proportional feedback law determined under the assumption of complete state accessibility. The final system is such that the plant/integrator eigensystem and observer eigensystem are decoupled and can be independently specified.

Computer programs based on the above procedures have been written and are currently being evaluated. Initial results indicate that control systems having desirable modal behavior and low eigensystem sensitivity to changes in plant parameters can be designed using these methods. A difficulty with this procedure, and all other eigensystem assignment procedures, is the uncertainty of how to translate system performance specifications into specification of a desired modal matrix. Continued research in this area would appear to be fruitful. A complete and detailed development of all procedures mentioned here is currently being prepared for submission to a refereed journal (ref. 12).

APPENDIX A

A NEW SPECTRAL SYNTHESIS PROCEDURE FOR MULTIVARIABLE REGULATORS

Presented at Allerton Conference on Communication, Control and Computing, October 1978

A NEW SPECTRAL SYNTHESIS PROCEDURE FOR MULTIVARIABLE REGULATORS

R. A. MAYNARD, R. R. MIELKE, S. R. LIBERTY AND S. SRINATHKUMAR
Department of Electrical Engineering
Old Dominion University
Norfolk, Virginia 23508

ABSTRACT

A method for selecting a multivariable state feedback controller that simultaneously achieves an a priori specification on closed loop eigenvalues and good mode mixing is presented. The problem is solved by projecting a desired modal matrix onto a constraint set containing the null space of the closed-loop state matrix, while assuring that the projection is in the null space. The feedback matrix follows immediately in the formulation. An example involving a helicopter hover controller is presented.

I. INTRODUCTION

This paper is concerned with the design problem of selecting the stationary feedback matrix K in the control law $u = Kx$ for a controllable multivariable system $\dot{x} = Ax + Bu$ where $x \epsilon R^n$ and $u \epsilon R^m$. The matrix K is to be selected so that the closed-loop system matrix $A + BK$ has arbitrarily assigned eigenvalues. Once the eigenvalues are assigned, the remaining freedom available in selecting eigenvectors is utilized to achieve desirable modal behavior. Srinathkumar and Rhoten in [1], [2], and [3] have presented a "spectral synthesis algorithm" for constructing the feedback gain K which exploits the nonuniqueness of the modal matrix of $A + BK$ in an attempt to achieve a priori design specifications. However, the a priori specifications are not explicitly incorporated in the procedure and the inherent design freedom available is not systematically exploited.

The work reported here relies heavily on insight gained in [1] but is based upon a different approach to the synthesis problem that allows a priori modal specifications, and results in a simple design procedure that can be parameterized and iterated.

II. NULL SPACE FORMULATION OF THE PROBLEM

The eigenvalue/eigenvector assignment problem can be expressed in the form $\hat{A}U = U\Lambda$, where $\hat{A} = A + BK$, U is the modal matrix and Λ is a diagonal matrix whose nonzero entries are the desired eigenvalues of $\hat{A}$.

This work was supported by the NASA-Langley Research Center under grant number NSG-1519.

This can be expressed in the form

$$[(I_n \otimes \hat{A}) + (-\Lambda^T \otimes I_n)] \text{ vec } U = 0, \tag{1}$$

where $\otimes$ is the Kronecker product [4] and vec U = col $(\underline{u}_i)$. Thus, if U is a solution to $\hat{A}U = U\Lambda$, then vec U lies in the null space of $S = [(I_n \otimes \hat{A}) + (-\Lambda^T \otimes I_n)]$. Moreover, $S \cdot \text{vec } U = 0$ if and only if $[\hat{A} - \lambda_i I_n]\, u_i = 0$ for all $i = 1, \cdots, n$.

In the remainder of this paper it is assumed that the system is in rank-reduced form with $B = [I_m \mid 0]^T$. If this is not the case, a coordinate transformation is applied to the system so that it is in this form. A solution is obtained according to the procedure to be described, and this solution is then transformed back to the original system coordinates. If A is partitioned so that

$$A = \left[\begin{array}{c|c} A_{11} & A_{12} \\ \hline A_{21} & A_{22} \end{array}\right]$$

with A_{11} an $m \times m$ matrix, then $[\hat{A} - \lambda_i I_n]\, u_i = 0$ if and only if the following two equations hold:

$$([A_{11} - \lambda_i I_m | A_{12}] + K)\, u_i = 0 \tag{2}$$

and

$$[A_{21} | A_{22} - \lambda_i I_{n-m}]\, u_i = 0 \tag{3}$$

Equation (3) is a constraint on the vectors that lie in the null space of $[\hat{A} - \lambda_i I_n]$; that is, vectors in the null space of $[\hat{A} - \lambda_i I_n]$ must also lie in the null space of $[A_{21} | A_{22} - \lambda_i I_{n-m}]$. Equation (2) is regarded as a constraint on K to be satisfied after U has been computed.

The desired modal mix is expressed as a desired modal matrix, P. By the projection theorem [5], the closest approximation, in a least squares sense, to P that can be achieved is obtained by projecting vec P onto the null space of S. This is equivalent to projecting p_i onto the null space of $[\hat{A} - \lambda_i I_n]$ for each $i = 1, \cdots, n$ to get each of the columns of the modal matrix, U, that most closely approximates P. This projection procedure can result in a U that is not a valid modal matrix. This occurrence will be indicated by the noninvertibility of U. When this happens, the entries of P are perturbed and the new P is projected. Once an invertible U is obtained, $\hat{A}$ is computed as $\hat{A} = U\Lambda U^{-1}$ with $\hat{A}$ partitioned to conform with A. The feedback matrix K is calculated from

$$K = [\hat{A}_{11}|\hat{A}_{12}] - [A_{11}|A_{12}] \tag{4}$$

Complex eigenvalues are treated in essentially the same way as real eigenvalues, after some preliminary manipulation. Using $\lambda_i = \alpha_i \pm j\beta_i$ and $u_i = x_i \pm jy_i$, $\hat{A}u_i = u_i\lambda_i$ becomes $\hat{A}(x_i \pm jy_i) = (x_i \pm jy_i)(\alpha_i \pm j\beta_i)$. The real and imaginary parts of this equation can be separated and the resulting equations can be written as

$$\hat{A}[x_i|y_i] = [x_i|y_i]\left[\begin{array}{c|c} \alpha_i & \beta_i \\ \hline -\beta_i & \alpha_i \end{array}\right] . \tag{5}$$

Partitioning

$$[x_i|y_i] = \left[\begin{array}{c|c} s_i & t_i \\ \hline v_i & w_i \end{array}\right] , \tag{6}$$

where s_i and t_i represent the first m-components of x_i and y_i, respectively, we obtain two constraint equations on u_i:

$$A_{21}\, s_i + A_{22}\, v_i = \alpha_i\, v_i - \beta_i\, w_i , \tag{7}$$

$$A_{21}\, t_i + A_{22}\, w_i = \beta_i\, v_i + \alpha_i\, w_i . \tag{8}$$

These can be expressed in the form

$$\left[\begin{array}{c|c|c|c} A_{21} & A_{22} - \alpha_i I_{n-m} & 0 & \beta_i I_{n-m} \\ \hline 0 & -\beta_i I_{n-m} & A_{21} & A_{22} - \alpha_i I_{n-m} \end{array}\right]\begin{bmatrix} x_i \\ y_i \end{bmatrix} = 0. \tag{9}$$

Thus, the constraint on u_i and its conjugate is that the 2-n component vector $(x_i^T\, y_i^T)^T$ must lie in the null space of

$$S_i = \left[\begin{array}{c|c|c|c} A_{21} & A_{22} - \alpha_i I_{n-m} & 0 & \beta_i I_{n-m} \\ \hline 0 & -\beta_i I_{n-m} & A_{21} & A_{22} - \alpha_i I_{n-m} \end{array}\right] \tag{10}$$

Letting p_i and q_i denote the real and imaginary parts, respectively, of the desired eigenvector conjugate pair associated with $\alpha_i \pm j\beta_i$, $(p_i^T\, q_i^T)^T$ is projected onto the null space of S_i to obtain the columns for the real and imaginary parts of the corresponding eigenvector conjugate pair in the system modal matrix.

III. HELICOPTER HOVER CONTROLLER APPLICATION

The design procedure is illustrated by an application to a problem considered by Srinathkumar [1]. The Sikorsky SH-3D helicopter in a hover mode is modeled as a ninth order linear system having state variables of longitudinal (u), lateral (v), and vertical (w) velocities in feet/seconds; pitch (q), roll (p) and yaw (r) rates in degrees/seconds; and pitch (θ), roll (ϕ) and yaw (ψ) angles in degrees. The inputs are main rotor collective pitch (u_c), tail rotor collective pitch (u_T), longitudinal cyclic pitch (u_p) and lateral cyclic pitch (u_R), all in degrees.

The open-loop dynamics are given by

$$\begin{bmatrix} \dot{x}_1 \\ \dot{x}_2 \end{bmatrix} = \left[\begin{array}{c|c} A_{11} & A_{12} \\ \hline A_{21} & A_{22} \end{array}\right] \begin{bmatrix} x_1 \\ x_2 \end{bmatrix} + \left[\begin{array}{c|c} B_{11} & B_{12} \\ \hline B_{21} & B_{22} \end{array}\right] \begin{bmatrix} u_1 \\ u_2 \end{bmatrix}$$

where $x_1 = [u\ w\ q\ \theta]^T$ and $u_1 = [u_p\ u_c]^T$ are the longitudinal variables and controls, and $x_2 = [v\ p\ \phi\ r\ \psi]^T$ and $u_2 = [u_R\ u_T]^T$ are the lateral variables and controls. The normalized system matrices, scaled by a rotor tip speed of 680 ft/sec, are given in Table I, along with the open-loop eigenvalues. The desired closed-loop eigenvalues are:

Response Variable	Eigenvalue
u	-4.5
w	-.324
q,θ	-1.5 ± j1
v	-.3
p,ϕ	-1.5 ± j1
r,ψ	-1.5 ± j1

With mode decoupling as an objective, a block diagonal P matrix is specified. The resulting modal matrix U and control law matrix K are given in Table II. As a second example, another block diagonal P matrix and the resulting U and K matrices are given in Table III.

If the modal behavior resulting from the above procedure is unsatisfactory, then utilization of a weighted norm in the projection procedure allows the designer to iterate to a more satisfactory solution for the preselected P matrix. For example, if an element of the modal matrix resulting from a projection is too large, then the norm over which optimization is carried out (via the projection theorem) should be weighted more heavily in the corresponding component. This weighted norm idea, which is not exemplified here, allows one to carry out an iterated design procedure.

$$A = \begin{bmatrix} -0.0160 & 0 & 0.0297 & -0.5934 & -0.0047 & -0.0012 & 0 & 0 & 0 \\ 0 & -0.3242 & 0.0021 & 0 & 0 & 0 & 0 & 0 & 0 \\ 0.1666 & 0.0843 & -0.5420 & 0 & 0.0620 & 0.5480 & 0 & 0 & 0 \\ 0 & 0 & 1 & 0 & 0 & 0 & 0 & 0 & 0 \\ 0.0047 & -0.0007 & -0.0285 & 0 & -0.0330 & -0.0297 & 0.5934 & 0.0107 & 0 \\ 0.2199 & -0.0137 & -1.9400 & 0 & -0.6109 & -1.9600 & 0 & 0.0100 & 0 \\ 0 & 0 & 0 & 0 & 0 & 1 & 0 & 0 & 0 \\ 0.0013 & -0.0163 & -0.0083 & 0 & 0.4710 & -0.0043 & 0 & -0.3030 & 0 \\ 0 & 0 & 0 & 0 & 0 & 0 & 0 & 1 & 0 \end{bmatrix}$$

$$B^T = \begin{bmatrix} 60.7609 & -5.0318 & -2.13 & 0 & 0.1187 & 0.6900 & 0 & 0.005 & 0 \\ 0.5934 & 0 & -6.15 & 0 & 0 & 0 & 0 & 0 & 0 \\ 0 & 0 & 0 & 0 & 0.5934 & 21.8100 & 0 & 0.174 & 0 \\ 0 & 0 & 0 & 0 & 0.2611 & 0.3475 & 0 & -7.480 & 0 \end{bmatrix}$$

Open-loop Eigenvalues: 0, -0.305, -0.324, 0.08 ± j0.313, -1.31 ± j0.65, -0.047 ± j0.414

TABLE I. SYSTEM PARAMETERS

$$P = \begin{bmatrix} 1 & 0 & 0 & 0 & 0 & 0 & 0 & 0 & 0 \\ 0 & 1 & 0 & 0 & 0 & 0 & 0 & 0 & 0 \\ 0 & 0 & 1 & 1 & 0 & 0 & 0 & 0 & 0 \\ 0 & 0 & -1 & 1 & 0 & 0 & 0 & 0 & 0 \\ 0 & 0 & 0 & 0 & 1 & 0 & 0 & 0 & 0 \\ 0 & 0 & 0 & 0 & 0 & 1 & 1 & 0 & 0 \\ 0 & 0 & 0 & 0 & 0 & -1 & 1 & 0 & 0 \\ 0 & 0 & 0 & 0 & 0 & 0 & 0 & 1 & 1 \\ 0 & 0 & 0 & 0 & 0 & 0 & 0 & -1 & 1 \end{bmatrix}$$

$$y = \begin{bmatrix} -0.7134 & -0.1770 & -0.4700 & 5.9545 & -0.0102 & -0.4556 & 0.3550 & 0.0492 & 0.0058 \\ 0.0037 & 1.0015 & 0.0640 & -0.5463 & 0.0022 & 0.0425 & -0.0252 & -0.0047 & -0.0011 \\ 0.0183 & 0.0000 & 0.5371 & -2.2397 & -0.0018 & 0.0148 & -0.0115 & -0.0019 & -0.0003 \\ -0.0041 & -0.0000 & -0.9370 & 0.8685 & 0.0060 & -0.0104 & 0.0007 & 0.0008 & 0.0007 \\ -0.0016 & 0.0006 & -0.0236 & 0.0312 & 0.7962 & 0.4001 & -0.1233 & -0.0142 & 0.0805 \\ -0.0030 & -0.0004 & -0.0077 & -0.0162 & 0.1216 & 0.4419 & -2.2530 & 0.0217 & -0.0107 \\ 0.0007 & 0.0011 & -0.0014 & 0.0098 & -0.4052 & -0.8972 & 0.9039 & -0.0133 & -0.0017 \\ -0.0000 & 0.0000 & -0.0000 & 0.0000 & -0.0000 & 0.0001 & -0.0006 & 0.5274 & -2.3079 \\ 0.0000 & -0.0000 & 0.0000 & -0.0000 & 0.0000 & -0.0002 & 0.0002 & -0.9536 & 0.9029 \end{bmatrix}$$

$$K = \begin{bmatrix} -0.0776 & -0.0015 & -0.1145 & 0.0722 & 0.0197 & 0.0121 & 0.0459 & -0.0013 & -0.0037 \\ 0.0439 & 0.0140 & 0.4076 & 0.4903 & 0.0024 & 0.0854 & -0.0113 & 0.0001 & 0.0006 \\ -0.0079 & 0.0009 & 0.0912 & -0.0009 & -0.0487 & -0.0596 & -0.1895 & -0.0087 & -0.0068 \\ -0.0001 & -0.0022 & 0.0010 & 0.0000 & 0.0618 & -0.0020 & -0.0044 & 0.3664 & 0.4343 \end{bmatrix}$$

TABLE II. FIRST ITERATION

$$P = \begin{bmatrix} 1 & 0 & 0 & 0 & 0 & 0 & 0 & 0 & 0 \\ 0 & 15 & 0 & 0 & 0 & 0 & 0 & 0 & 0 \\ 0 & 0 & 1.5 & 0 & 0 & 0 & 0 & 0 & 0 \\ 0 & 0 & -0.5 & -0.5 & 0 & 0 & 0 & 0 & 0 \\ 0 & 0 & 0 & 0 & 1 & 0 & 0 & 0 & 0 \\ 0 & 0 & 0 & 0 & 0 & 1.5 & 0 & 0 & 0 \\ 0 & 0 & 0 & 0 & 0 & -0.5 & -0.5 & 0 & 0 \\ 0 & 0 & 0 & 0 & 0 & 0 & 0 & 1.5 & 0 \\ 0 & 0 & 0 & 0 & 0 & 0 & 0 & -0.5 & -0.5 \end{bmatrix}$$

$$U = \begin{bmatrix} -0.7134 & -0.2650 & -0.4180 & -0.6064 & -0.0102 & -0.3018 & -0.1650 & 0.0459 & -0.0283 \\ 0.0637 & 15.0220 & 0.0195 & 0.0367 & 0.0022 & 0.0253 & 0.0165 & -0.0048 & 0.0028 \\ 0.0183 & 0.0001 & 1.2695 & 0.2324 & -0.0018 & 0.0076 & 0.0056 & -0.0017 & 0.0011 \\ -0.0041 & -0.0002 & -0.5144 & -0.4979 & 0.0060 & -0.0018 & -0.0050 & 0.0011 & 0.0000 \\ -0.0016 & 0.0088 & -0.0118 & -0.0124 & 0.7962 & 0.0581 & 0.2039 & -0.0379 & -0.0088 \\ -0.0030 & -0.0055 & 0.0078 & -0.0037 & 0.1216 & 1.1359 & 0.2463 & 0.0088 & -0.0239 \\ 0.0007 & 0.0170 & -0.0048 & -0.0007 & -0.4052 & -0.4485 & -0.4632 & -0.0114 & 0.0083 \\ -0.0000 & 0.0000 & -0.0000 & -0.0001 & -0.0000 & 0.0000 & 0.0001 & 1.2637 & 0.2363 \\ 0.0000 & -0.0000 & 0.0000 & 0.0001 & 0.0000 & 0.0000 & -0.0000 & -0.5105 & -0.4979 \end{bmatrix}$$

$$K = \begin{bmatrix} -0.0742 & -0.0014 & 0.0223 & 0.0905 & 0.0167 & 0.0020 & 0.0366 & 0.0044 & 0.0036 \\ 0.0435 & 0.0140 & 0.3939 & 0.5094 & 0.0020 & 0.0865 & -0.0115 & -0.0008 & -0.0002 \\ -0.0080 & 0.0009 & 0.0883 & -0.0005 & -0.0486 & -0.0594 & -0.1893 & -0.0088 & -0.0070 \\ -0.0001 & -0.0022 & 0.0010 & 0.0000 & 0.0618 & -0.0020 & -0.0044 & 0.3604 & 0.4343 \end{bmatrix}$$

TABLE III. SECOND ITERATION

REFERENCES

[1] S. Srinathkumar, "Spectral Characterization of Multi-Input Dynamic systems", Ph.D. dissertation, Oklahoma State University, Stillwater, Oklahoma, May 1976.

[2] S. Srinathkumar, "Eigenvalue/Eigenvector Assignment Using Output Feedback", IEEE Trans. Automatic Control, Vol. AC-23, pp. 79-81, February 1978.

[3] S. Srinathkumar and R. P. Rhoten, "Linear Multivariable Synthesis By Eigenvalue/Eigenvector Assignment", Proc., International Forum on Alternatives for Multivariable Control, pp. 164-174, October 1977.

[4] R. Bellman: Introduction To Matrix Analysis, McGraw-Hill Book Company, Inc., New York, 1970.

[5] D. G. Luenberger: Optimization By Vector Space Methods, John Wiley and Sons, Inc., New York, 1969.

APPENDIX B

DESIGN OF ROBUST STATE FEEDBACK CONTROLLERS VIA EIGENVALUE/EIGENVECTOR ASSIGNMENT

Presented at Asilomar Conference on Circuits, Systems and Computers, November 1978

DESIGN OF ROBUST STATE FEEDBACK CONTROLLERS VIA EIGENVALUE/EIGENVECTOR ASSIGNMENT

R. R. Mielke, R. A. Maynard, S. R. Liberty, and S. Srinathkumar

Department of Electrical Engineering
Old Dominion University
Norfolk, Virginia 23508

ABSTRACT

A new method of selecting a multivariable state feedback controller is presented. The resulting controller simultaneously realizes arbitrary closed-loop eigenvalues, approximates specified modal behavior and achieves low eigensystem sensitivity with respect to plant parameter variations. The method characterizes a vector space slightly larger than the null space of the closed-loop system matrix and projects a desired modal matrix onto this space. Sensitivity of eigenvalues and eigenvectors is then minimized local to the desired modal matrix using a gradient search technique. A tutorial example to illustrate the design procedure is given.

I. INTRODUCTION

Consider the controllable multivariable system $\dot{x} = Ax + Bu$ where $x \in R^n$ and $u \in R^m$. In this paper we are concerned with the eigenvalue/eigenvector assignment problem of selecting a stationary feedback matrix K in the control law $u = Kx$ such that the eigenvalues of the closed-loop system matrix $\hat{A} = A + BK$ are arbitrarily placed. Once the eigenvalues are assigned, the remaining freedom available in selecting the closed-loop system eigenvectors is to be used to approximate specified modal behavior and to achieve insensitivity to plant parameter variations.

A "spectral synthesis algorithm" for constructing a feedback gain matrix which utilizes the nonuniqueness of the closed-loop system matrix in an attempt to achieve specified modal behavior was presented in [1], [2], and [3]. It was also shown how sensitivities of eigenvalues and eigenvectors could be calculated for a given design. However, a priori modal and sensitivity specifications were not explicitly incorporated in the procedure and the inherent design freedom available was not fully exploited. In [4] the total design freedom available in selecting the eigenvectors of $\hat{A}$ was used to globally minimize eigensystem sensitivity. However, the procedure often results in unsatisfactory system dynamic behavior since realization of low system eigensensitivity and desired modal behavior are sometimes conflicting objectives.

The work reported here relies heavily on insight gained in [1] but is based upon a different approach to the synthesis problem. The first step in the design procedure is the calculation of the initial closed-loop system eigenvector matrix which most closely approximates the modal matrix design specification. This is accomplished by constructing an orthonormal basis of a vector space slightly larger than the null space of the closed-loop system matrix and then projecting the desired modal matrix onto this space. The second step of the design procedure is to reduce eigensystem sensitivity to plant parameter variations. A cost function consisting of a weighted sum of eigenvalue and eigenvector sensitivities is minimized using a gradient search procedure. The search is performed local to the initial eigenvector selection to retain desired modal characteristics.

II. INITIAL EIGENVECTOR SELECTION

It is assumed that the system is in rank-reduced form with $B = [I_m \mid 0]^T$ and only the case of distinct eigenvalues is considered. The eigensystem equation for the closed-loop system is

$$\hat{A}U = U\Lambda \tag{1}$$

where $U = [u_1\ u_2\ \cdots\ u_n]$ is the modal matrix and $\Lambda = \mathrm{dia}\,\{\lambda_1, \lambda_2, \cdots, \lambda_n\}$ is a diagonal matrix of eigenvalues. It has been shown [5] that necessary and sufficient conditions for U to be a modal matrix satisfying (1) are that each eigenvector u_i be in the null space of the matrix

This work was supported by the NASA-Langley Research Center under grant number NSG-1519.

CH1369-8/79/0000-0287$00.75 © 1979 IEEE

$S_i = [A_{21} \mid A_{22} - \lambda_i I_{n-m}]$ where

$$A = \left[\begin{array}{c|c} A_{11} & A_{12} \\ \hline A_{21} & A_{22} \end{array}\right]$$

and, that these eigenvectors be linearly independent in R^n. Let R_i be a matrix whose columns are an orthonormal basis for the null space of S_i. Then the columns of all possible modal matrices satisfying (1) can be expressed as linear combinations of the columns of all R_i's.

Let P denote the desired, although not necessarily realizable, modal matrix given as a design specification. The initial eigenvector selection is made by projecting P, column by column, onto the vector space containing all possible modal matrices. This results in n sets of constants, $\alpha_i = [\alpha_{1i}, \alpha_{2i}, \cdots, \alpha_{mi}]^T$, $i = 1, 2, \cdots, n$ such that $u_i = R_i \alpha_i$. If the resulting eigenvectors u_i are linearly independent, then the realizable modal matrix U which is closest to the desired modal matrix P in a Euclidean norm sense has been obtained. If the eigenvectors are not linearly independent or if the resulting U matrix is unsatisfactory, the α_{ij} parameters are perturbed slightly by weighting the projection norm. Once an invertible modal matrix is obtained, the closed-loop system matrix is computed as $\hat{A} = U\Lambda U^{-1}$. The initial feedback gain matrix K is then calculated from

$$K = \left\{[\hat{A}_{11} \mid \hat{A}_{12}] - [A_{11} \mid A_{12}]\right\}, \qquad (2)$$

where $\hat{A}$ is partitioned to conform to A.

III. EIGENSYSTEM SENSITIVITY REDUCTION

At the completion of the first stage of the design process an initial feedback gain matrix K has been calculated such that the resulting closed-loop system realizes the specified eigenvalues and approximates the desired modal matrix as closely as possible. In addition, the design freedom available in selecting a modal matrix U has been parameterized in terms of the constants α_{ij}. Suppose now that the elements of the plant matrices A and B are dependent on a scalar parameter p. Then the closed-loop system is also dependent on p and the extent of this dependency, that is, the sensitivity of the system eigenvalues and eigenvectors with respect to p, is related to the choice of modal matrix U. In the second stage of the design procedure, the initial selection of U is modified such that a cost function consisting of a weighted sum of eigenvalue and eigenvector sensitivities is reduced.

Let $\frac{dA}{dp}$ and $\frac{dB}{dp}$ denote the sensitivities of the plant parameters with respect to p. Then

$$\frac{d\hat{A}}{dp} = \frac{dA}{dp} + \frac{dB}{dp} K \qquad (3)$$

and the eigenvalue sensitivities are given by [6]

$$\frac{d\lambda_i}{dp} = v_i^T \left(\frac{d\hat{A}}{dp}\right) u_i \qquad (4)$$

and the eigenvector sensitivities are

$$\frac{du_i}{dp} = \sum_{\substack{j=1 \\ j \neq i}}^{n} \left\{ \left[\frac{v_j^T \left(\frac{d\hat{A}}{dp}\right) u_i}{\lambda_i - \lambda_j} \right] \right\} \qquad (5)$$

where $V = [v_1\ v_2 \cdots v_n]$ is a normalized reciprocal basis for $\hat{A}$. The sensitivity cost function is defined by

$$J = \sum_{i=1}^{n} \left\{ \ell_i \left|\frac{d\lambda_i}{dp}\right|^2 + m_i \left\|\frac{du_i}{dp}\right\|^2 \right\} \qquad (6)$$

where ℓ_i, m_i, $i = 1, 2, \cdots, n$ are positive weighting constants. Modifications to the initial modal matrix are calculated using a gradient search procedure in which the sensitivity cost function J is reduced by choice of the constants α_{ij}. Thus, at the k+1 iteration, a gradient

$$\nabla(k) = \frac{Q(k)}{\|Q(k)\|}, \quad Q(k) = [q_{ij}(k)] = \left[\frac{\partial J}{\partial \alpha_{ij}}(k)\right] \qquad (7)$$

is calculated and used to generate new constant values, $\alpha_{ij}(k+1)$, from the current values, $\alpha_{ij}(k)$, according to

$$\alpha_{ij}(k+1) = \alpha_{ij}(k) - d\left[\frac{q_{ij}(k)}{\|Q(k)\|}\right] \qquad (8)$$

where d is the gradient search step size.

Calculation of required derivatives of the cost function proceeds as follows. Defining two auxiliary sensitivity matrices $S = [s_{ij}]$ where

$$S = U^{-1}\left(\frac{d\hat{A}}{dp}\right) U \qquad (9)$$

and $H = [h_1\ h_2 \cdots h_n] = [h_{ij}]$ where

$$h_{ij} = \begin{cases} 0 & i=j \\ \dfrac{s_{ij}}{\lambda_j-\lambda_i} & i\neq j \end{cases}, \qquad (10)$$

the cost function is expressed as

$$J = \sum_{k=1}^{n} \left\{ \ell_k (s_{kk})^2 + m_k (Uh_k)^T (Uh_k) \right\}. \qquad (11)$$

Straightforward differentiation with respect to a single α_{ij} coefficient then yields

$$\frac{\partial J}{\partial \alpha_{ij}} = 2 \sum_{k=1}^{n} \left\{ \ell_k \, s_{kk} \left(\frac{\partial s_{kk}}{\partial \alpha_{ij}} \right) + m_k (Uh_k)^T \left[\left(\frac{\partial U}{\partial \alpha_{ij}} \right) h_k + U \left(\frac{\partial h_k}{\partial \alpha_{ij}} \right) \right] \right\} \qquad (12)$$

where

$$\frac{\partial h_{qk}}{\partial \alpha_{ij}} = \begin{cases} 0 & q=k \\ \dfrac{1}{\lambda_k-\lambda_q} \left(\dfrac{\partial s_{qk}}{\partial \alpha_{ij}} \right) & q\neq k \end{cases} \qquad (13)$$

and

$$\frac{\partial S}{\partial \alpha_{ij}} = -U^{-1}\left(\frac{\partial U}{\partial \alpha_{ij}}\right)U^{-1}\left(\frac{d\hat{A}}{dp}\right)U + U^{-1}\left(\frac{dB}{dp}\right)\left(\frac{\partial U_1}{\partial \alpha_{ij}}\right)\Lambda - U^{-1}\left(\frac{dB}{dp}\right)U_1\Lambda U^{-1}\left(\frac{\partial U}{\partial \alpha_{ij}}\right) + U^{-1}\left(\frac{d\hat{A}}{dp}\right)\left(\frac{\partial U}{\partial \alpha_{ij}}\right) \qquad (14)$$

The sensitivity reduction stage of the design process is highly designer interactive. At the completion of each iteration, a decision to continue or to terminate the sensitivity reduction must be made. This decision often involves a compromise between achieving low eigensystem sensitivity and retaining desired modal behavior. Once the decision to terminate has been made, the final controller design is calculated using equation (2).

A computer program based on this design procedure has been written and is currently being evaluated. Initial results indicate that controllers with significantly lower eigensystem sensitivity and satisfactory modal behavior are obtainable with this procedure. A tutorial example is presented in the next section to illustrate the new design procedure.

IV. A DESIGN EXAMPLE

Consider the system $\dot{x} = Ax + Bu$ with $x \in R^3$ and $u \in R^2$ where

$$A = \begin{bmatrix} -2.0000 & 0.0000 & 1.0000 \\ 0.0000 & -(2.0000)/p & (1.0000)/p \\ 1.0000 & 1.0000 & -2.0000 \end{bmatrix},$$

$$B = \begin{bmatrix} 1.0000 & 0.0000 \\ 0.0000 & (1.0000)/p \\ 0.0000 & 0.0000 \end{bmatrix}$$

and p is a plant parameter with nominal value 1.0000. It is desired to calculate a feedback gain matrix K such that the closed-loop system has eigenvalues

$$\lambda_1 = -1.0000, \ \lambda_2 = -1.2000, \ \lambda_3 = -3.0000$$

and modal matrix as close as possible to

$$P = \begin{bmatrix} 3.7500 & -0.6700 & 1.0000 \\ 3.2500 & 0.7500 & -1.0000 \\ 7.0000 & 0.0000 & 0.1000 \end{bmatrix}.$$

The first step in the design procedure is the selection of an initial set of closed-loop eigenvectors. The eigenvectors are selected such that the initial modal matrix U is as close to P as possible without regard for eigensystem sensitivity. The vector space containing all possible modal matrices is characterized by the matrices

$$R_1 = \begin{bmatrix} -0.7071 & 0.4082 \\ 0.7071 & 0.4082 \\ 0.0000 & 0.8165 \end{bmatrix}, \quad R_2 = \begin{bmatrix} -0.7071 & 0.3482 \\ 0.7071 & 0.3482 \\ 0.0000 & 0.8704 \end{bmatrix}$$

and

$$R_3 = \begin{bmatrix} -0.7071 & -0.4082 \\ 0.7071 & -0.4082 \\ 0.0000 & 0.8165 \end{bmatrix}.$$

Projecting P into this space yields the set of α coefficients

$$\alpha(0) = \begin{bmatrix} -0.3536 & 1.0041 & -1.4142 \\ 8.5732 & 0.0279 & 0.0816 \end{bmatrix},$$

the corresponding modal matrix

$$U = \begin{bmatrix} 3.7500 & -0.7003 & 0.9667 \\ 3.2500 & 0.7197 & -1.0333 \\ 7.0000 & 0.0242 & 0.0667 \end{bmatrix},$$

and the initial feedback gain matrix

$$K = \begin{bmatrix} 13.2526 & 12.5341 & -13.3833 \\ -13.1593 & -12.4526 & 12.2955 \end{bmatrix},$$

For purposes of comparison with other modal matrices, U is normalized so that

$$U_N = \begin{bmatrix} 0.4369 & -0.6972 & 0.6824 \\ 0.3789 & 0.7165 & -0.7295 \\ 0.8158 & 0.0242 & 0.0471 \end{bmatrix}.$$

For this initial modal matrix selection, the eigenvalue sensitivities are

$$\left|\frac{d\lambda_1}{dp}\right|^2 = 0.11, \quad \left|\frac{d\lambda_2}{dp}\right|^2 = 65.14, \quad \left|\frac{d\lambda_3}{dp}\right|^2 = 492.69,$$

and the eigenvector sensitivities are

$$\left\|\frac{du_1}{dp}\right\|^2 = 18524.98, \quad \left\|\frac{du_2}{dp}\right\|^2 = 39.75,$$

$$\left\|\frac{du_3}{dp}\right\|^2 = 263.73.$$

With unity weighting coefficients for all eigenvalue and eigenvector sensitivities, the total system sensitivity cost function is

$$J = 19386.4.$$

If the plant parameter p is perturbed 10% above nominal, then the closed-loop eigenvalues become

$$\hat{\lambda}_1 = -0.9915, \quad \hat{\lambda}_2 = -1.4473 - j1.0981,$$

$$\hat{\lambda}_3 = -1.4473 + j1.0981$$

and the normalized modal matrix is

$$\hat{U}_N = \begin{bmatrix} 0.6601 + j0.0000 & 0.0000 + j0.7262 & 0.7262 + j0.0000 \\ 0.0918 + j0.0000 & 0.0515 - j0.6834 & -0.6834 + j0.0515 \\ 0.7456 + j0.0000 & -0.0123 + j0.0531 & 0.0531 - j0.0123 \end{bmatrix}.$$

These results indicate high eigensystem sensitivity to changes in the parameter p for the initial eigenvector selection.

The second stage of the design process consists of reducing the eigensystem sensitivity using a gradient search procedure. The gradient at the first iteration is

$$\nabla(1) = \begin{bmatrix} 0.0172 & 0.0040 & -0.0578 \\ 0.0094 & -0.1372 & -0.9887 \end{bmatrix}.$$

Using a step size d = 0.9000 results in a new set of α coefficients

$$\alpha(1) = \begin{bmatrix} -0.3690 & 1.0005 & -1.3622 \\ 8.5647 & 0.1514 & 0.9714 \end{bmatrix},$$

a new modal matrix

$$U_N = \begin{bmatrix} 0.4383 & -0.6471 & 0.3387 \\ 0.3774 & 0.7512 & -0.8127 \\ 0.8157 & 0.1302 & 0.4741 \end{bmatrix},$$

and the corresponding feedback gain matrix

$$K = \begin{bmatrix} 1.4904 & 0.6961 & -1.5856 \\ -1.4195 & -0.6904 & 0.5448 \end{bmatrix}.$$

For this selection of modal matrix, the eigenvalue sensitivities are

$$\left|\frac{d\lambda_1}{dp}\right|^2 = 0.06, \quad \left|\frac{d\lambda_2}{dp}\right|^2 = 0.01, \quad \left|\frac{d\lambda_3}{dp}\right|^2 = 6.57,$$

the eigenvector sensitivities are

$$\left\|\frac{du_1}{dp}\right\|^2 = 1.66, \quad \left\|\frac{du_2}{dp}\right\|^2 = 9.26, \quad \left\|\frac{du_3}{dp}\right\|^2 = 1.66,$$

and the system sensitivity cost function is

$$J = 19.2.$$

If the plant parameter p is again perturbed 10% above nominal, the closed-loop eigenvalues are

$$\hat{\lambda}_1 = -0.9767, \quad \hat{\lambda}_2 = -1.2104, \quad \hat{\lambda}_3 = -2.7683,$$

and the normalized modal matrix is

$$\hat{U}_N = \begin{bmatrix} 0.4479 & -0.7404 & 0.3717 \\ 0.3802 & 0.6654 & -0.7701 \\ 0.8092 & -0.0949 & 0.5184 \end{bmatrix}.$$

The new results indicate significantly reduced eigensystem sensitivity has been achieved with relatively small changes in the initial modal matrix selection. Continued iteration results in a final cost function value of approximately J = 8.65 with a correspondingly larger distance between the resulting modal matrix and the specified matrix P.

REFERENCES

[1] S. Srinathkumar, "Spectral Characterization of Multi-Input Dynamic Systems", Ph.D. dissertation, Oklahoma State University, Stillwater, Oklahoma, May 1976.

[2] S. Srinathkumar, "Eigenvalue/Eigenvector Assignment Using Output Feedback", IEEE Trans. Automatic Control, Vol. AC-23, pp. 79-81, February 1978.

[3] S. Srinathkumar and R. P. Rhoten, "Linear Multivariable Synthesis By Eigenvalue/Eigenvector Assignment", Proc., International Forum on Alternatives for Multivariable Control, pp. 164-174, October 1977.

[4] S. Pohjolainen and H. Koivo, "On Robust Eigenvalue/Eigenvector Assignment", Allerton Conference on Communication, Control and Computing, Vol. 16, October 1978.

[5] R. A. Maynard, R. R. Mielke, S. R. Liberty, and S. Srinathkumar, "A New Spectral Synthesis Procedure for Multivariable Regulators", Allerton Conference on Communication, Control and Computing, Vol. 16, October 1978.

[6] J. H. Wilkinson, The Algebraic Eigenvalue Problem, London: Oxford University Press, 1965.

APPENDIX C

DESIGN OF A TURBOJET ENGINE CONTROLLER VIA

EIGENVALUE/EIGENVECTOR ASSIGNMENT: A NEW SENSITIVITY FORMULATION

Presented at Joint Automatic Control

Conference, June 1979

DESIGN OF A TURBOJET ENGINE CONTROLLER VIA EIGENVALUE/EIGENVECTOR ASSIGNMENT: A NEW SENSITIVITY FORMULATION

S. R. Liberty, R.A. Maynard, and R. R. Mielke

Department of Electrical Engineering
Old Dominion University, Norfolk, Virginia 23508

Abstract

This brief paper summarizes the approach the authors will take in designing a feedback controller for the F-100 turbofan engine. The technique to be utilized simultaneously realizes dominant closed-loop eigenvalues, approximates specified modal behavior, and achieves low eigensystem sensitivity with respect to certain plant parameter variations.

SUMMARY

Our approach to the design of a feedback controller for the F-100 turbofan engine [1] is essentially a pole-zero assignment technique. The actual controllers that we will design are in the multivariable proportional-plus-integral class. The matrix gains in these structures will be determined by manipulations on the eigensystem

$$\hat{A}U = U\Lambda$$

where U is the modal matrix of $\hat{A}$ and Λ is the corresponding quasi-diagonal matrix of complex eigenvalues. The matrix $\hat{A}$ is a composite of feedback gains and original plant-model parameters. Consequently, we call our technique a "spectral synthesis procedure" or an "eigenvalue-eigenvector assignment technique".

To date, this technique has only been applied in state feedback contexts where all closed-loop eigenvalues could be arbitrarily assigned. This, of course, is not the case in the F-100 turbofan engine. There are two ways to handle this without modifying the existing state feedback technique. (Modification to the output feedback case is nontrivial and a subject of current research.)

First, design could be carried out as if all states were available for measurement, and the resulting controller then coupled to an observer. Second, if the plant measurement, explicitly includes all dominant mode behavior of the system and nondominant modes are stable, then application of our technique to the reduced order system where order equals the number of measurements is straightforward.

The unique aspects of our eigenvalue-eigenvector assignment technique are the explicit incorporation of *a priori* "mode mixing" specifications, and the systematic achievement of low eigensystem sensitivity within the mode mixing constraints.

Low eigensystem sensitivity and desirable mode mixing are often, but not always, competing objectives. The spectral synthesis technique, including these unique aspects, is documented in [2] and [3], where it appears in the regulator context.

Our oral presentation will illustrate eigensystem sensitivity for several designs and will contain full-scale simulations of these designs. Performance comparisons will be made and the design procedure will be demonstrated.

REFERENCES

[1] M. K. Sain, "The Theme Problem", in Alternatives for Linear Multivariable Control, pp. 20-30, National Engineering Consortium, Inc., Chicago, 1978.

[2] R. A. Maynard, et al., "A New Spectral Synthesis Procedure for Multivariable Regulators", in Proceedings of the 1978 Allerton Conference on Communication, Control and Computing, Vol. 16, October 1978.

[3] R. R. Mielke, et al., "Design of Robust State Feedback Controllers Via Eigenvalue/Eigenvector Assignment", in Proceedings of the Twelfth Annual Allerton Conference on Circuits, Systems, and Computers, November 1978.

This work was supported by the NASA-Langley Research Center under grant number NSG-1519.

APPENDIX D

DESIGN OF A ROBUST MULTIVARIABLE PROPORTIONAL PLUS INTEGRAL CONTROLLER VIA SPECTRAL ASSIGNMENT

Presented at Asilomar Conference on Circuits,
Systems, and Computers, November 1979

DESIGN OF A ROBUST MULTIVARIABLE PROPORTIONAL PLUS INTEGRAL CONTROLLER VIA SPECTRAL ASSIGNMENT

Roland R. Mielke, Robert A. Maynard, and Stanley R. Liberty

Department of Electrical Engineering
Old Dominion University
Norfolk, Virginia 23508

ABSTRACT

A new design procedure for a class of multivariable integral plus proportional servo control systems is presented. The procedure utilizes a null space formulation of the eigensystem assignment problem assuming complete state feedback. Reduced order observers are used to estimate unavailable states. The resulting system realizes arbitrary closed-loop eigenvalues, approximates specified modal behavior and achieves low eigensystem sensitivity with respect to plant parameter variations. A tutorial example to illustrate the design procedure is included.

I. INTRODUCTION

A new design procedure for a class of multivariable integral plus proportional servo control systems is presented. The design procedure consists of three steps. In the first step, integral and proportional feedback gain matrices are calculated assuming complete state accessibility using an eigenvalue/eigenvector technique. The technique utilizes a null space formulation of the eigensystem assignment problem which simultaneously realizes arbitrary closed-loop eigenvalues, approximates specified modal behavior and achieves low eigensystem sensitivity with respect to plant parameter variations. The second step in the design procedure is the construction of a reduced order observer to estimate those states which are not accessible at the output of the plant. It is shown that the null space formulation of the eigensystem assignment problem is also applicable in the design of reduced order observers. The final step in the servo problem design procedure is the calculation of system gain matrices to realize an overall eigensystem in which the plant/integrator dynamics and observer dynamics are decoupled.

The null space formulation of the eigensystem assignment problem is outlined in Section II. A more detailed presentation of the eigenvalue/eigenvector assignment technique is given in [1] and the method of reducing eigensystem sensitivity with respect to plant parameter variations is described in [2]. In Section III, the new design procedure for multivariable integral plus proportional servo control systems is presented. This is followed by a tutorial example in Section IV to illustrate the design procedure. The interested reader is referred to [3] for a more detailed development of all procedures outlined here.

II. THE EIGENSYSTEM ASSIGNMENT PROBLEM

Consider the multivariable system described by $\dot{x} = Ax + Bu$ where $x \in R^n$, $u \in R^m$, B has full column rank, and the pair (A,B) is controllable. The eigensystem assignment problem consists of selecting a real-valued mxn matrix K such that the closed-loop system matrix

$$\hat{A} = A + BK \quad . \tag{1}$$

has arbitrarily specified eigenvalues and eigenvectors that are close in some sense to a desired eigenvector assignment. In addition, it is highly desirable that the eigensystem of $\hat{A}$ be insensitive to changes in elements of A and B. In general it is not possible to achieve arbitrary eigenvector assignment so that it is necessary to seek an approximation to a desired assignment. The controllability assumptions on the pair (A,B) are sufficient to guarantee arbitrary eigenvalue assignment.

For clarity of presentation in this section it is assumed that a change of coordinates has been made such that B is in rank reduced form, $B = [I_m \;\; 0]$, where I_m denotes the mxm identity matrix. The eigensystem equation for $\hat{A}$ is

$$\hat{A}U = U\Lambda \tag{2}$$

where $U = [u_1, u_2, \cdots, u_n]$ is a matrix of eigenvectors of $\hat{A}$ and $\Lambda = \mathrm{diag}\{\lambda_1, \lambda_2, \cdots, \lambda_n\}$ is the diagonal matrix of eigenvalues of $\hat{A}$. Only the case of distinct eigenvalues is treated here. If A and K are partitioned compatibly with that of B,

$$A = \left[\begin{array}{c|c} A_{11} & A_{12} \\ \hline A_{21} & A_{22} \end{array}\right] , \quad K = [K_1 \,\vdots\, K_2] ,$$

then equation (2) is equivalent to

$$[A_{11} - \lambda_i I + K_1 \,\vdots\, A_{12} + K_2]\, u_i = 0 \tag{3}$$

and

$$[A_{21} \,\vdots\, A_{22} - \lambda_i I]\, u_i = 0. \tag{4}$$

This work was supported by the NASA-Langley Research Center under grant number NSG-1519.

For a given eigenvalue assignment, it is thus necessary that each u_i lie in the null space of

$$N_i = [A_{21} \vdots A_{22} - \lambda_i I] \tag{5}$$

for $i = 1, 2, \cdots, n$ as shown by equation (4). Equation (3) is then regarded as a constraint on K once u_i has been determined. If an independent set of u_i's satisfying equation (4) is found, then $U = [u_1, u_2, \cdots, u_n]$ will be a modal matrix satisfying equation (2).

Let R_i be a matrix whose columns form an orthonormal basis for the null space of N_i. Then the columns of all possible modal matrices satisfying equation (2) can be expressed as linear combinations of the columns of all R_i's. Let P denote the desired, although not necessarily realizable, modal matrix given as a design specification. The eigenvector selection is made by projecting P, column by column, onto the vector space containing all possible modal matrices. This results in n sets of constants, $\alpha_i = [\alpha_{1i}, \alpha_{2i}, \cdots, \alpha_{mi}]^T$, $i = 1, 2, \cdots, n$ such that $u_i = R_i \alpha_i$. If the resulting eigenvectors u_i are linearly independent, then the realizable modal matrix U which is closest to P in a Euclidean norm sense has been obtained. If the resulting eigenvectors are not linearly independent or if the resulting modal matrix is unsatisfactory, the α_{ij} parameters are perturbed slightly by weighting the projection norm. Once an invertible modal matrix is obtained, the closed-loop system matrix is computed as $\hat{A} = U\Lambda U^{-1}$. The feedback gain matrix K is then calculated from

$$K = ([\hat{A}_{11} \vdots \hat{A}_{12}] - [A_{11} \vdots A_{12}]) \tag{6}$$

where $\hat{A}$ is partitioned to conform to A.

Suppose now that the elements of the plant matrices A and B are dependent on a scalar parameter p. Then the closed-loop system is also dependent on p and the extent of this dependency, that is the sensitivity of the system eigenvalues and eigenvectors with respect to p, is related to the choice of modal matrix U. The second stage of the eigensystem assignment problem consists of reducing the eigensystem sensitivity by appropriate modification of the initial modal matrix. Let $\frac{dA}{dp}$ and $\frac{dB}{dp}$ denote the sensitivities of the plant parameters with respect to p. Then

$$\frac{d\hat{A}}{dp} = \frac{dA}{dp} + \frac{dB}{dp} K \tag{7}$$

and the eigenvalue sensitivities are given by [4]

$$\frac{d\lambda_i}{dp} = v_i^T \left(\frac{d\hat{A}}{dp}\right) u_i \tag{8}$$

while the eigenvector sensitivities are

$$\frac{du_i}{dp} = \sum_{\substack{j=1 \\ j \neq i}}^{n} \left\{ \left[\frac{v_j^T \left(\frac{d\hat{A}}{dp}\right) u_i}{\lambda_i - \lambda_j} \right] u_j \right\} \tag{9}$$

where $V = [v_1, v_2, \cdots, v_n]$ is a normalized reciprocal basis for $\hat{A}$. A sensitivity cost function is defined by

$$J = \sum_{i=1}^{n} \left\{ \ell_i \left|\frac{d\lambda_i}{dp}\right|^2 + m_i \left\|\frac{du_i}{dp}\right\|^2 \right\} \tag{10}$$

where ℓ_i, m_i, $i = 1, 2, \cdots, n$ are positive weighting constants. Modifications to the initial modal matrix are calculated using a gradient search procedure in which the sensitivity cost function J is reduced by choice of the constants α_{ij}. The sensitivity reduction stage of the design process is highly designer interactive. At the completion of each iteration a decision to continue or terminate the sensitivity reduction must be made. This decision often involves a compromise between achieving low eigensystem sensitivity and retaining desired modal behavior.

III. THE SERVO PROBLEM

The procedure outlined above for the eigensystem assignment problem is applicable to output feedback and servo problems if observers are utilized to realize the feedback law obtained under the assumption of complete state accessibility. The design procedure for the servo problem is developed here. Let the plant be described by $\dot{x} = Ax + Bu$, $y = Cx$ where $x \in R^n$, $u \in R^m$, $y \in R^r$. In addition, the plant is assumed to be completely state controllable and observable. For clarity of presentation in this section it is assumed that a change of coordinates has been made such that C is in rank reduced form, $C = [I_r \vdots 0]$.

The block diagram in Figure 1 illustrates the integral plus proportional feedback control structure to be considered. The dotted line in this figure indicates what the feedback structure would be if all plant states were available for measurement. The first step in the servo problem design procedure is to select gain matrices K_1 and K_2 to achieve desirable system performance. The state dynamics of the system in Figure 1 are given by

$$\begin{bmatrix} \dot{x} \\ \hline \dot{x}_c \end{bmatrix} = \left[\begin{array}{c|c} A + BK_1 & BK_2 \\ \hline -C & 0 \end{array}\right] \begin{bmatrix} x \\ \hline x_c \end{bmatrix} + \begin{bmatrix} 0 \\ \hline I \end{bmatrix} [\hat{u}]. \tag{11}$$

It is easily seen that the state matrix of this plant/integrator system can be written as

$$\hat{A}_p = \left[\begin{array}{c|c} A & 0 \\ \hline -C & 0 \end{array}\right] + \begin{bmatrix} B \\ \hline 0 \end{bmatrix} [K_1 \mid K_2]. \tag{12}$$

Since this matrix has the form of equation (1), the procedures of the eigensystem assignment problem are applicable to the determination of K_1 and K_2 if the rank of the matrix

$$\left[\begin{array}{c|c|c|c|c} B & AB & A^2B & \cdots & A^{n+r-1}B \\ \hline 0 & CB & CAB & \cdots & CA^{n+r-2}B \end{array}\right]$$

is n+r. If this rank condition is not met, adjustment of the number of inputs and/or outputs may correct the situation. Therefore, given a designer specified eigenvalue matrix Λ_p and desired modal matrix P_p, the eigensystem assignment procedure yields gain matrices K_1 and K_2 which realize the specified eigenvalue matrix

A_p and a modal matrix U_p. As noted in Section II, U_p usually represents a designer selected compromise between the realizable modal matrix nearest P_p and the realizable modal matrix resulting in minimum eigensystem sensitivity local to P_p.

The second step in the servo problem design procedure is the construction of a reduced order observer to estimate those states which are not accessible at the output of the plant. A block diagram of a reduced order observer is shown within dotted lines in Figure 2. The observer system is described by [5]

$$\dot{z} = Fz + Gy + TBu \tag{13}$$

where

$$F = A_{22} - L\,A_{12}\,, \tag{14}$$

$$T = [-L \mid I]\,, \tag{15}$$

$$G = (A_{22} - L\,A_{12})L + (A_{21} - L\,A_{11}) \tag{16}$$

and A is the plant matrix partitioned to conform with that of C as

$$A = \left[\begin{array}{c|c} A_{11} & A_{12} \\ \hline A_{21} & A_{22} \end{array}\right].$$

Furthermore, the transpose of equation (14),

$$F^T = A_{22}^T - A_{12}^T L^T\,, \tag{17}$$

has the form of equation (10) so that the eigensystem assignment procedure may be utilized to determine L given desired eigenvalue and eigenvector matrices, Λ_o and P_o.

The final step in the servo problem design procedure is the determination of the feedback gain matrices R and K_3 in the complete integral plus proportional servo control system of Figure 2. This system is described by the equation

$$\begin{bmatrix} \dot{x} \\ \dot{x}_c \\ \dot{z} \end{bmatrix} = \left[\begin{array}{c|c|c} A+BRC & BK_2 & BK_3 \\ \hline -C & 0 & 0 \\ \hline GC+TBRC & TBK_2 & F+TBK_3 \end{array}\right] \begin{bmatrix} x \\ x_c \\ z \end{bmatrix} + \begin{bmatrix} 0 \\ I \\ 0 \end{bmatrix} [\hat{u}]\,. \tag{18}$$

Making the coordinate transformation

$$\begin{bmatrix} x \\ x_c \\ w \end{bmatrix} = \begin{bmatrix} I & 0 & 0 \\ 0 & I & 0 \\ -T & 0 & I \end{bmatrix} \begin{bmatrix} x \\ x_c \\ z \end{bmatrix}\,, \tag{19}$$

equation (18) becomes

$$\begin{bmatrix} \dot{x} \\ \dot{x}_c \\ \dot{w} \end{bmatrix} = \left[\begin{array}{c|c|c} A+B(RC+K_3T) & BK_2 & BK_3 \\ \hline -C & 0 & 0 \\ \hline 0 & 0 & F \end{array}\right] \begin{bmatrix} x \\ x_c \\ w \end{bmatrix} + \begin{bmatrix} 0 \\ I \\ 0 \end{bmatrix} [\hat{u}]. \tag{20}$$

Therefore, choosing

$$K_1 = RC + K_3T\,, \tag{21}$$

the state matrix of equation (20) becomes

$$\hat{A} = \left[\begin{array}{c|c} \hat{A}_p & A_r \\ \hline 0 & F \end{array}\right]\,. \tag{22}$$

It follows that the eigenvalues of $\hat{A}$ are given by

$$\Lambda = \left[\begin{array}{c|c} \Lambda_p & 0 \\ \hline 0 & \Lambda_o \end{array}\right] \tag{23}$$

and, assuming that the observer eigenvalues are chosen distinctly from the eigenvalues of the plant/integrator system, the eigenvectors are given by

$$\hat{U} = \left[\begin{array}{c|c} U_p & QU_o \\ \hline 0 & U_o \end{array}\right]\,. \tag{24}$$

In the original coordinates, the system modal matrix is

$$U = \left[\begin{array}{c|c} U_p & QU_o \\ \hline RU_p & SU_o \end{array}\right]\,, \tag{25}$$

where Q, R, S are linear transformation matrices. Thus, the servo system of Figure 2 realizes an eigensystem in which the plant/integrator dynamics and observer dynamics are decoupled and can be independently specified. Partitioning K_1 of equation (12) as

$$K_1 = [K_{11} \mid K_{12}]\,, \tag{26}$$

where K_{11} consists of the first m columns of K_1, the solution for K_3 and R from equation (19) is given by

$$K_3 = K_{12} \tag{27}$$

and

$$R = K_{11} + K_{12}\,L\,. \tag{28}$$

A computer program based on this design procedure has been written and is currently being evaluated. Initial results indicate that servo control systems having satisfactory modal behavior and low eigensystem sensitivity to changes in plant parameters can be effectively designed by this procedure. A difficulty of this procedure, and a subject of future research, is the uncertainty of how to translate system performance specifications into specification of a desired modal matrix. A tutorial example is presented in the next section to illustrate the new design procedure.

IV. A DESIGN EXAMPLE

Consider the system $\dot{x} = Ax + Bu$, $y = Cx$ with $x \in R^3$, $u \in R^2$ and $y \in R^2$ where

$$A = \begin{bmatrix} -2.0 & 0.0 & 1.0 \\ 0.0 & -(2.0)/p & (1.0)/p \\ 1.0 & 1.0 & -2.0 \end{bmatrix}\,,$$

$$B = \begin{bmatrix} 1.0 & 0.0 \\ 0.0 & (1.0)/p \\ 0.0 & 0.0 \end{bmatrix}\,,$$

$$C = \begin{bmatrix} 1.0 & 0.0 & 0.0 \\ 0.0 & 1.0 & 0.0 \end{bmatrix}$$

and p is a plant parameter with nominal value 1.0. It is desired to design a servo control system so that $y = [y_1 \;\; y_2]^T$ tracks step reference input signals with zero steady-state error. In addition, the outputs y_1 and y_2 should be decoupled, have little or no overshoot, and have dominant time constants of approximately 1 second and 1/2 second, respectively.

In order to meet the desired tracking requirements for step reference inputs, it is decided to use a servo control system incorporating integral error feedback as shown in Figure 2. A reduced order observer of order one is incorporated to estimate state x_3 which is not available at the output of the plant. To meet the response time constant specifications, the closed loop eigenvalues are assigned as

$$\lambda_1 = -1.0 \quad \lambda_2 = -2.0, \quad \lambda_3 = -8.0$$

$$\lambda_4 = -9.0 \quad \lambda_5 = -10.0, \quad \lambda_{OB} = -7.0$$

Finally, a diagonally dominant modal matrix specification is made to provide decoupling between the outputs.

The design procedure consists of first calculating the feedback matrices K_1 and K_2 of Figure 1 assuming complete state feedback. A reduced order observer is then constructed to estimate those states not actually available at the output. Finally, feedback gain matrices K_3 and R are computed. The outcome of this design procedure is given below.

$$F = [\,-7.0\,]$$

$$TB = [\,-5.0 \quad 0.0\,]$$

$$G = [\,-24.0 \quad 1.0\,]$$

$$R = \begin{bmatrix} -152.0 & -5.4 \\ 33.2 & -8.8 \end{bmatrix}$$

$$K_2 = \begin{bmatrix} 39.1 & 20.9 \\ -4.8 & 15.9 \end{bmatrix}$$

$$K_3 = \begin{bmatrix} -27.4 \\ 6.3 \end{bmatrix}.$$

The complete system is described by the equation $\dot{\hat{x}} = \hat{A}\hat{x} + \hat{B}\hat{u}$ where

$$\hat{A} = \begin{bmatrix} -154.0 & -5.4 & 1.0 & 39.1 & 20.9 & -27.4 \\ 33.2 & -10.8 & 1.0 & -4.8 & 15.9 & 6.3 \\ 1.0 & 1.0 & -2.0 & 0.0 & 0.0 & 0.0 \\ -1.0 & 0.0 & 0.0 & 0.0 & 0.0 & 0.0 \\ 0.0 & -1.0 & 0.0 & 0.0 & 0.0 & 0.0 \\ 736.0 & 28.1 & 0.0 & -195.5 & -104.5 & 129.9 \end{bmatrix}$$

and

$$\hat{B} = \begin{bmatrix} 0.0 & 0.0 \\ 0.0 & 0.0 \\ 0.0 & 0.0 \\ 1.0 & 0.0 \\ 0.0 & 1.0 \\ 0.0 & 0.0 \end{bmatrix}.$$

The system response for input reference signals

$$\hat{u} = \begin{bmatrix} 1 \\ 0 \end{bmatrix} \text{ and } \hat{u} = \begin{bmatrix} 1 \\ 1 \end{bmatrix}$$

are shown in Figures 3a and 3b, respectively.

V. REFERENCES

[1] R. A. Maynard, R. R. Mielke, S. R. Liberty, and S. Srinathkumar, "A New Spectral Synthesis Procedure for Multivariable Regulators", Proc., Allerton Conference on Communication, Control, and Computing, pp. 754-761, October 4-6, 1978.

[2] R. R. Mielke, R. A. Maynard, S. R. Liberty, and S. Srinathkumar, "Design of Robust State Feedback Controllers Via Eigenvalue/Eigenvector Assignment", Conference Record, Twelfth Asilomar Conference on Circuits, Systems, and Computers, pp. 287-291, November 6-8, 1979.

[3] S. R. Liberty, R. R. Mielke, and R. A. Maynard, Final Report on NASA-Langley Research Center grant number NSG-1519, in preparation.

[4] J. H. Wilkinson, The Algebraic Eigenvalue Problem, London: Oxford University Press, 1965.

[5] D. J. Luenberger, "An Introduction To Observers", IEEE Transactions on Automatic Control, Vol. AC-16, No. 6, pp. 596-602, December 1971.

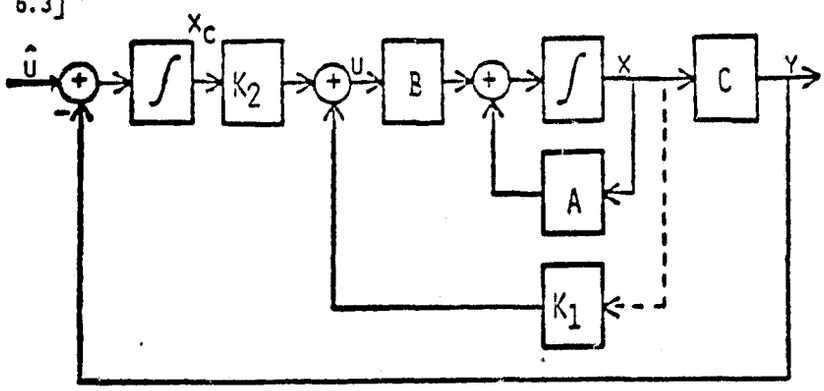

FIGURE 1

SERVO CONTROL SYSTEM WITH COMPLETE STATE FEEDBACK

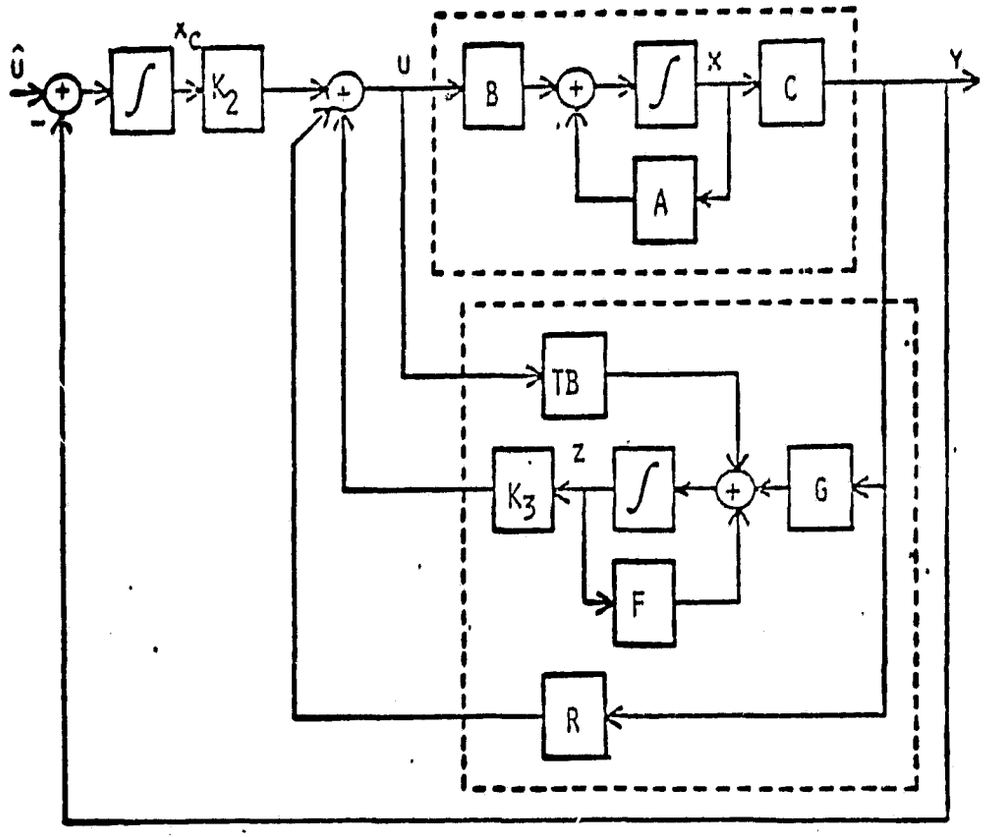

FIGURE 2

SERVO CONTROL SYSTEM WITH OUTPUT
FEEDBACK AND REDUCED ORDER OBSERVER

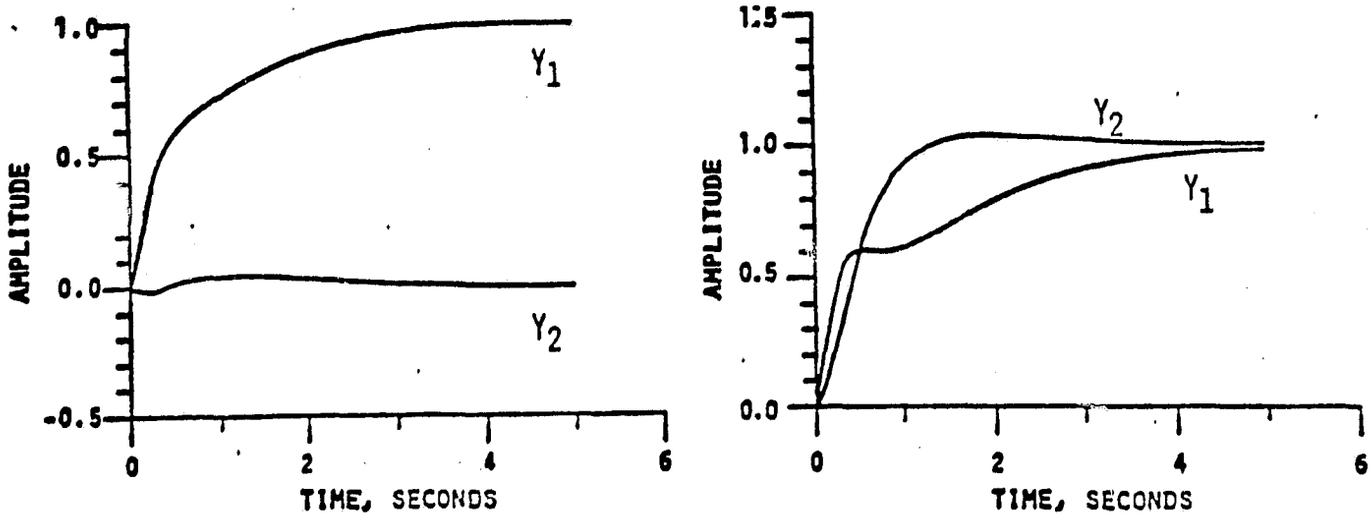

FIGURE A

FIGURE B

FIGURE 3

RESPONSE OF EXAMPLE SERVO CONTROL SYSTEM

REFERENCES

1. Porter, B.; and Crossley, T. R.: Modal Control, Theory and Application. Taylor and Francis Ltd. (London), 1972.

2. Anderson, B. D. O.; and Luenberger, D. G.: Design of Multivariable Feedback Systems. Proc., I.E.E.E., Vol. 114, No. 3, 1967, pp. 395-399.

3. Chidambara, M. R.; Broen, R. B.; and Zaborszky, J.: A Simple Algorithm for Pole Assignment in a Multiple Input Linear Time Invariant Dynamic System. Trans. ASME, Vol. 96, Series G, No. 1, 1974, pp. 13-18.

4. Fallside, F.: Control System Design by Pole-Zero Assignment. Academic Press, 1977.

5. Srinathkumar, S.; and Rhoten, R. P.: Eigenvalue/Eigenvector Assignment for Multivariable Systems. Electronic Letters, Vol. 11, No. 6, 1975, pp. 124-125.

6. Srinathkumar, S.: Spectral Characterization of Multi-Input Dynamic Systems. Ph.D. Dissertation, Oklahoma State University (Stillwater), May 1976.

7. Maynard, R. A.; Mielke, R. R.; Liberty, S. R.; and Srinathkumar, S.: A New spectral Synthesis Procedure for Multivariable Regulators. Allerton Conference on Communication, Control, and Computing, Vol. 16, Oct. 1978.

8. Mielke, R. R.; Maynard, R. A.; Liberty, S. R.; and Srinathkumar, S.: Design of Robust State Feedback Controllers Via Eigenvalue/Eigenvector Assignment. Twelfth Annual Asilomar Conference on Circuits, Systems, and Computers, Nov. 1978.

9. Liberty, S. R.; Maynard, R. A.; and Mielke, R. R.: Design of a Turbojet Engine Controller Via Eigenvalue/Eigenvector Assignment: A New Sensitivity Formulation. Joint Automatic Control Conference, June 1979.

10. Mielke, R. R.; Maynard, R. A.; and Liberty, S. R.: Design of a Robust Multivariable Proportional Plus Integral Controller Via Spectral Assignment. Thirteenth Annual Asilomar Conference on Circuits, Systems, and Computers, Nov. 1979.

11. Luenberger, D. J.: An Introduction to Observers. I.E.E.E. Transactions on Automatic Control, Vol. AC-16, No. 6, pp. 596-602, Dec. 1971.

12. Liberty, S. R.; Maynard, R. A.; and Mielke, R. R.: Spectral Synthesis Procedures for Multivariable Systems. Departmental Research Report, Department of Electrical Engineering, Old Dominion University, Norfolk, Va., in preparation.