N O T I C E

THIS DOCUMENT HAS BEEN REPRODUCED FROM MICROFICHE. ALTHOUGH IT IS RECOGNIZED THAT CERTAIN PORTIONS ARE ILLEGIBLE, IT IS BEING RELEASED IN THE INTEREST OF MAKING AVAILABLE AS MUCH INFORMATION AS POSSIBLE

"Made available under NASA sponsorship
in the interest of early and wide dis-
semination of Earth Resources Survey
Program information and without liability
for any use made thereof."

8.0-10028
CR-142395

REPRINTED FROM

TWELFTH INTERNATIONAL SYMPOSIUM ON
REMOTE SENSING OF ENVIRONMENT

APRIL 20-26, 1978

ORGANIZED AND CONDUCTED BY

Environmental Research Institute of Michigan
Ann Arbor, Michigan

Natural Resources Management Center
Quezon City, Philippines

in cooperation with
The University of Michigan
Extension Service

SPONSORED, IN PART, BY

Natural Resources Management Center
Department of Natural Resources
Republic of the Philippines

U.S. Agency for International Development
U.S. Department of State

U.S. Geological Survey
U.S. Department of the Interior

Agricultural Research Service, Agricultural Stabilization
and Conservation Service, Cooperative State Research
Service, Economic Research Service, Forest Service,
Foreign Agricultural Service, Statistical Reporting Service,
U.S. Department of Agriculture

Environmental Research Institute of Michigan

Office of Applications
National Aeronautics and Space Administration

Division of Biomedical & Environmental Research
U.S. Department of Energy

Federal Highway Administration
U.S. Department of Transportation

Fish & Wildlife Service
U.S. Department of the Interior

U.S. Coast Guard Research & Development Center
U.S. Department of Transportation

National Oceanic & Atmospheric Administration
U.S. Department of Commerce

Tennessee Valley Authority

The General Electric Co., Space Division

Daedalus Enterprises, Inc.

The Bendix Corporation

WITH CONTRIBUTIONS FROM

Taiwan Forestry Bureau, Taipei, Taiwan
NAC, Inc., Tokyo, Japan

(E80-10023) TELLUS: A COMBINED SURFACE TEMPERATURE, SOIL MOISTURE AND EVAPORATION MAPPING APPROACH (Commission of the European Communities) 11 p HC A02/MF A01 CSCL 05B
N80-12526
Unclas
G3/43 00023

"TELL-US"

A COMBINED SURFACE TEMPERATURE, SOIL MOISTURE AND EVAPORATION MAPPING APPROACH

A. Rosema and J.H. Bijleveld

E.A.R.S. b.v., Engineering Consultants for Environmental Analysis and Remote Sensing, Delft, the Netherlands

P. Reiniger and G. Tassone

Commission of the European Communities
Joint Research Centre - Ispra Establishment
Italy

K. Blyth and R.J. Gurney

Institute of Hydrology, Wallingford, United Kingdom

ABSTRACT

In the framework of the Tellus Project of the European Communities, an algorithm has been worked out permitting the evaluation of the thermal inertia and of the surface relative humidity of bare and scarcely vegetated soils from remotely sensed day and night surface temperatures. The cumulative daily evaporation can also be calculated by this method.

The algorithm was tested on existing data from a field experiment and was applied in a flight experiment. While the calculated soil moisture agreed satisfactorily with the average moisture content of the top soil layer, the estimated daily evaporation deviated from the measured values due to simplifications inherent in the model.

1. INTRODUCTION

The countries of the European Communities carry ou. a joint investigation on the applicability of HCMM-satellite thermal imagery for soil moisture and heat budget evaluation in zones of agricultural and environmental interest; the HCMM-Tellus Project. In this framework, a new algorithm has been developed to convert remotely sensed day and night temperatures of bare and scarcely vegetated areas into parameters relevant to soil moisture.

Such an interpretation routine calls for a process, which is the reverse of temperature simulation. For this purpose, and mainly in the U.S., methods have been worked out to calculate the thermal inertia of the soil from the difference between the day and the night temperature to be obtained by means of HCMM [1, 2, 3, 4, 5]. We have discussed this approach [6] which is limited to cases of known or negligibly small evaporation.

It must be noted, however, that in the above approach the available information is not used completely. Only one data point i.e. the day-night temperature difference is used, while two data, the day and the night temperature, are available. Therefore, in principle, two unknowns could be determined. This has been achieved in the "TELL-US" algorithm des-

cribed in the present paper. This algorithm determines the thermal inertia and the surface relative humidity. Moreover, the total daily evaporation is obtained.

2. THE ALGORITHM

The algorithm consists of a main program and of a sub-program simulating the daily course of the surface temperature (Fig. 1). The main program compares the simulated day and night temperatures with the temperatures obtained from the satellite. In one version it adjusts the values of the thermal inertia and the surface relative humidity until agreement between the simulated and the measured temperatures has been obtained.
A second version of the main program produces a look-up table, consisting of the day temperatures, the night temperatures and the daily evaporation totals, for various combinations of thermal inertia and surface relative humidity.

The simulation sub-program solves numerically the finite difference equation which describes transient heat conduction in a homogeneous soil:

$$\frac{dT}{dt} = \frac{\lambda}{C} \frac{d^2T}{dz^2} \qquad (1)$$

(For the meaning of the symbols we refer to the table at the end of this paper)

As a lower boundary, a level in the soil at a depth outside the reach of the daily temperature cycle is taken. For this level the temperature has to be specified. As an upper boundary a level in the atmosphere is taken, where windspeed, air temperature and air specific humidity are measured. The atmosphere and the soil regime are coupled by a continuity requirement: the surface heat balance:

$$I_n + G + H + LE = 0 \qquad (2)$$

$$I_n = (1-a)I + I_\uparrow + \varepsilon I_\downarrow \qquad (3)$$

$$G = \lambda \left(\frac{dT}{dz}\right)_{z=0} \qquad (4)$$

$$H = \varrho c \frac{T_a - T_o}{r} \qquad (5)$$

$$LE = \varrho L \frac{s_a - h.\hat{s}_o}{r} \qquad (6)$$

The atmospheric resistance r depends on the surface aerodynamic roughness, on the windspeed and on the stability of the atmosphere. It is calculated from the integrated Businger-Dyer profile relationships [7].

The simulation sub-program may contain only two unknowns: the surface relative humidity and the thermal inertia. This implies that we have to accept certain physical simplifications. The soil is assumed to be homogeneous and with a constant water content. The surface relative humidity is also assumed to be constant. Accordingly, the values of thermal inertia and surface relative humidity that are produced by the algorithm, should be taken as "effective" values.

One might question why the thermal inertia did not show up in equations (1) - (6). The thermal inertia, defined as:

$$p = (\lambda C)^{\frac{1}{2}} \qquad (7)$$

REPRODUCIBILITY OF THE
ORIGINAL PAGE IS POOR

appears as the soil property that affects the magnitude of changes in surface temperature if differential equation (1) is analytically solved, for simplified boundary conditions and heat balance. Therefore, the observed day and night temperatures depend on the thermal inertia, rather than on the thermal conductivity.

In the present, somewhat more realistic description, our system of equations (1) - (6) included, had to be solved numerically by the explicit finite difference scheme of Dufort and Frankel, applied to a grid which expands with depth. This scheme is used to predict successive temperature profiles. The surface temperature is iteratively solved from the surface heat balance equation after each prediction.

REPRODUCIBILITY OF THE
ORIGINAL PAGE IS POOR

3. DATA ACQUISITION

Table 1 reviews the essential input data, and their determination. The data have been split into local data and regional data. The regional data are to be obtained from the nearest weather station. The local data have to be specified for every ground plot to be interpreted. Of these, the surface temperatures and the albedo may be obtained by means of the HCMM satellite or an airborne scanner. The most cumbersome parameter to be determined is the surface aerodynamic roughness. It can be estimated with existing techniques from the dimensions of the actual roughness elements employing land-use maps, which may be derived from airborne, or even LANDSAT imagery. If the area is not horizontal the slope direction and slope dip have to be estimated from topographical maps.

4. RELATION TO "SOIL MOISTURE"

In terms of soil moisture, the meaning of the thermal inertia and of the surface relative humidity of the soil is not self-evident. While the surface relative humidity depends uniquely on the soil moisture potential at the surface, thermal inertia is a function of the average water content in the top soil. This relation, however, is not unique as it depends also on the soil mineral composition.

5. TEST OF THE ALGORITHM

The TELL-US algorithm has been tested on data from a field experiment of the USWCL at Phoenix, Arizona. On March 3, 1971, a test plot of Lare Avondale loam was irrigated with 10 cm of water, and left to dry. We have used the data measured 2, 6 and 14 days after irrigation representing subsequent stages of drying. The soil temperature measured at "1mm depth" was taken to be a good approximation of the surface temperature.

The look-up table produced by the computer program for 2 days after irrigation is plotted as a look-up graph in Figs. 2a and 2b. In Fig. 2a the simulated day-night temperature pairs are plotted for the various combinations of thermal inertia and surface relative humidity, and connected by lines of equal thermal inertia (dashed) and equal surface relative humidity. In Fig. 2b, the total daily evaporation is plotted versus the surface relative humidity. Similar look-up graphs were produced for the other two days of the experiment.

The measured day-night temperature pairs are plotted as crosses in Fig. 2a and the corresponding values of the thermal inertia and surface relative humidity are found by interpolation. Subsequently, the total daily evaporation values are found from the graph 2b. Instead of carrying out this graphical interpretation, the same result may be obtained directly with the automatic search version of the algorithm.

The thermal inertia found on the look-up graphs was translated into soil moisture using the thermal inertia-water content relation shown in Fig. 4. This relation was calculated from

the mineral composition of the soil.

The soil moisture profiles measured gravimetrically 2 and 14 days after irrigation, are plotted in Figs. 3a and b, both for the day and night measurement. The water content calculated by the TELL-US algorithm is indicated by an arrow. The agreement between measured and calculated soil moisture is excellent 2 days after irrigation (Fig. 3a), 14 days after irrigation (Fig. 3b) the calculated soil moisture represents only an "average" moisture content of the top 8 cm of the soil. The data of the 6th day, not shown in this paper, have an intermediate position.

The values of the total daily evaporation as measured by a weighing lysimeter and determined with the TELL-US algorithm are compared in Table II. This comparison is not yet satisfactory as, except for the initial drying stage, the algorithm tends to underestimate evaporation. The reason for this tendency lies in the assumption of a constant surface relative humidity which causes excessive condensation to be simulated for the night.

It may be hoped that after a further improvement of the algorithm calculated evaporation will come closer to values measured with existing field methods.

6. JOINT FLIGHT EXPERIMENT

As part of the pre-launch activities of the Tellus Project, a joint flight experiment was carried out in mid-September 1977 on the Grendon Underwood Experimental Catchment northwest of London, U.K. The application of the TELL-US algorithm was one of the aims of this experiment. At the time of the night-minimum and of the day-maximum surface temperature, a strip 8 km long and 1.6 km wide was scanned from 1000 m altitude with an airborne DS-1250 multispectral scanner having a thermal band between 8 and 14 μm. The night was clear, with no wind and the day was sunny, with a light wind and occasional high altitude clouds.

Simultaneously with the overflight, ground surface temperatures were measured with a PRT-5 radiation thermometer (9.5 - 11.5 μm, 2° FOV) on a 6 ha ploughed field of Denchworth clay. Sixty moisture samples of the top 3 cm of soil were taken in a pattern of four lines across the field, with an additional 10 core samples down to 15 cm depth. Input data for the TELL-US algorithm were obtained from instrumentation installed on the field and from an automatic weather station at a distance of 1.5 km.

First preliminary results of the experiment are presented in Tables III and IV. The field was divided into two parts of about equal size, according to the two distinct temperature classes shown by the daytime scanner image.

The day and night surface temperatures are given in Table III. The airborne surface temperatures were corrected for the effect of the atmosphere using temperature, humidity and pressure data from a tethered balloon 40 km from the site. The night-time correction is less than the day-time correction and has the opposite sign due to a temperature inversion in the first 100 m of the atmosphere at night. While the night temperatures measured by the scanner and on the ground lie in approximately the same range, day-time temperatures measured from the aircraft exceed the ground surface temperatures by a few degrees. This discrepancy may be due to a difference in the temperature distribution on the rough soil surface as seen by the small-angle radiation thermometer on the ground and by the airborne scanner with a resolution element of 2.5 x 2.5 m.

As shown in Table IV, the soil moisture percentage in the 0-3 cm layer seems to be slightly higher in the SE-part of the field, while the 0-15 cm moisture percentage is higher in the NW-part. The thermal inertia and the relative surface humidity in Table IV have been found by interpolation in the corresponding look-up table using the ground measured surface

REPRODUCIBILITY OF THE
ORIGINAL PAGE IS POOR

temperatures. At this early stage of data evaluation it can only be observed that both the thermal inertia and the surface relative humidity evolve in the right direction, i.e. thermal inertia increases with the mean moisture content of the bulk top soil (0-15 cm), whereas surface relative humidity increases with the moisture content in the very topmost layer (0-3 cm).

7. CONCLUSION AND OUTLOOK

It could be shown that by means of the TELL-US algorithm the top-soil water content, the surface relative humidity and the total daily evaporation may be determined from one day- and one night-temperature and standard ground based data. Further experimental work is still needed to test the complete potential of the algorithm. Part of this work is already in progress in the framework of the Tellus Project of the European Communities.

A similar or generalized algorithm might be constructed to cover vegetated surfaces. These algorithms create the attractive prospect of a combined surface temperature, soil moisture and evaporation mapping system on the basis of satellite or airborne thermal imagery. Such data are of high relevance in agriculture, ecology and hydrology. They are useful for irrigation scheduling, prediction of yields, and large scale management of rangelands. They will allow agronomists and ecologists, particularly in arid and semi-arid zones, to follow, analyze and predict processes such as seed germination, early crop growth, drought damage, erosion and desert formation. Such a mapping system could also be used for early warning and fighting of pests, such as the desert locust [8, 9].

ACKNOWLEDGEMENT

REPRODUCIBILITY OF THE
ORIGINAL PAGE IS POOR

We gratefully acknowledge the cooperation of the United States Water Conservation Laboratory, Phoenix, Arizona, and in particular Dr. Ray D. Jackson, for permitting the use of his experimental data in testing the algorithm.

We also thank all the participants in the Joint Flight Experiment for their efforts dedicated to the success of the campaign.

REFERENCES

[1] WATSON, K., "Geologic Applications of Thermal Infrared Images", Proc. IEEE, 63, p. 128-137 (1975)

[2] KAHLE, A.B., GILLESPIE, A.R., GOETZ, A.F.H., ADDINGTON, J.D., "Thermal Inertia Mapping", Proc. 10th Int. Symp. on Remote Sensing of the Environment, Ann Arbor, Michigan, Oct. 1975

[3] PRICE, J.C., "Thermal Inertia Mapping: A New View of the Earth", Rep. X-913-76-121, Goddard Space Flight Centre, Greenbelt, Maryland, June, 1976

[4] KAHLE, A.B., "A Simple Thermal Model of the Earth's Surface for Geological Mapping by Remote Sensing", J. Geoph. Res., vol. 82, no. 11, p. 1673-1680, April 10th, 1977

[5] GILLESPIE, A.R., KAHLE, A.B., "Construction and Interpretation of a Digital Thermal Inertia Image", Phot. Eng. and Rem. Sens., vol. 43, no. 8, p. 983-1000, August, 1977

[6] ROSEMA, A., "Heat Capacity Mapping, is it Feasible?", Proc. 10th Int. Symp. on Remote Sensing of the Environment, p. 571-582, Ann Arbor, Michigan, Oct., 1975

[7] BUSINGER, J.A., WYNGAARD, J.C., IZUMI, Y., BRADLEY, E.F., "Flux Profile Relationships in the Atmospheric Surface Layer", J. Atmos. Sci., 28, p. 181-189, March, 1971

[8] IDSO, B.S., JACKSON, R.D., REGINATO, R.J., "Detection of Soil Moisture by Remote Surveillance", American Scientist, vol. 63, p. 549-557, Sept./Oct., 1975

[9] JACKSON, R.D., REGINATO, R.J., IDSO, B.S., "Wheat Canopy Temperature; a Practical Tool for Evaluating Water Requirements", Water Resources Research, vol. 13, no. 3, p. 651-656, 1977.

DEFINITION OF THE SYMBOLS

C	volumetric heat capacity of soil [J/m^3K]
G	soil heat flux at the surface [J/m^2s]
H	atmospheric heat flux [J/m^2s]
$I_\downarrow$	long wave irradiance [J/m^2s]
$I_\uparrow$	long wave emittance [J/m^2s]
I	short wave irradiance [J/m^2s]
I_n	net radiation [J/m^2s]
L	heat of evaporation [J/kg]
LE	latent atmospheric heat flux [J/m^2s]
T	(soil) temperature [K]
T_a	air temperature [K]
T_o	surface temperature [K]
a	albedo [fraction]
c	heat capacity of air [J/kgK]
h	surface relative humidity [fraction]
p	soil thermal inertia [$J/m^2s^{\frac{1}{2}}K$]
r	atmospheric resistance [s/m]
s_a	air specific vapour density [dimensionless]
$\hat{s}_o$	specific vapour density at saturation, at the soil surface [dimensionless]
t	time [s]
z	depth [m]
λ	soil thermal conductivity [J/m K s]
ϱ	air density [kg/m^3]
ε	long wave emissivity [fraction]

2272

REPRODUCIBILITY OF THE
ORIGINAL PAGE IS POOR

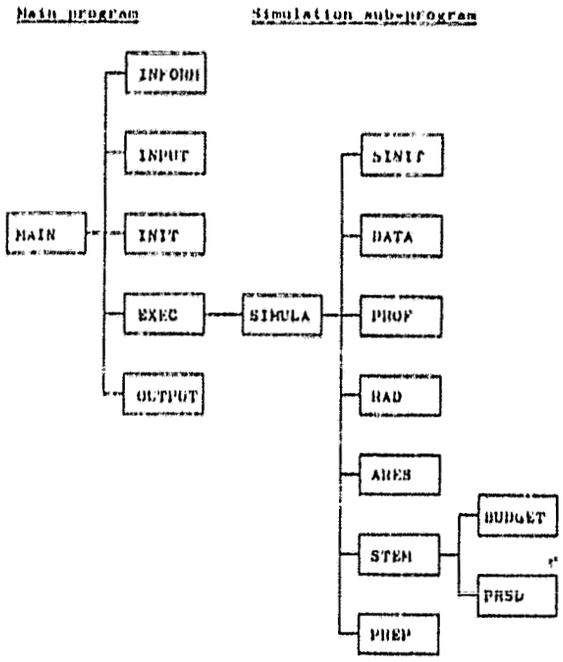

REPRODUCIBILITY OF THE
ORIGINAL PAGE IS POOR

FIG. 1 SUBROUTINE RELATIONAL DIAGRAM

INFORM	: general information
INPUT	: input
INIT	: initialization
EXEC	: execution and manipulation of the simulation sub-program, automatic search for the thermal inertia and surface relative humidity
OUTPUT	: output
SIMULA	: simulation sub-program
SINIT	: initialization
DATA	: weather data interpolation
PROF	: temperature profile prediction
RAD	: calculation of irradiation terms
ARES	: calculation of the atmosphere resistance
BUDGET	: surface heat budget evaluation
STEM	: iterative solution of the surface temperature
PRSD	: intermediate output facility
PREP	: determination of day temperature, night temperature and total daily evaporation.

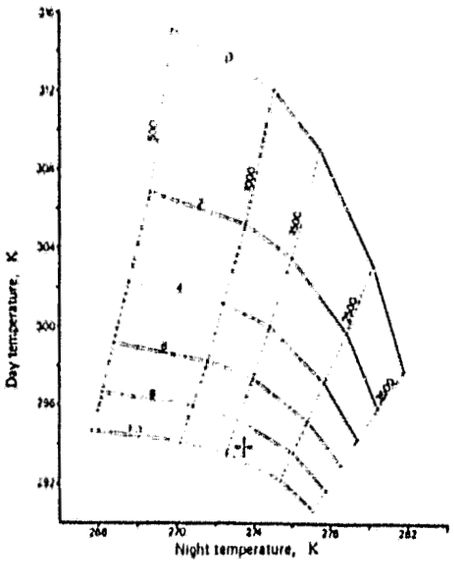

a) Thermal inertia and relative surface humidity

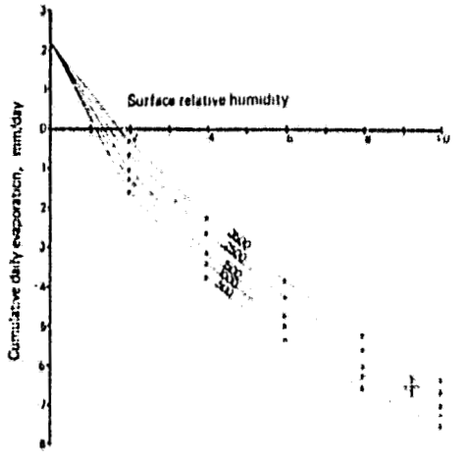

b) Cumulative, daily evaporation

FIG. 2 LOOK-UP GRAPH, 2 DAYS AFTER IRRIGATION

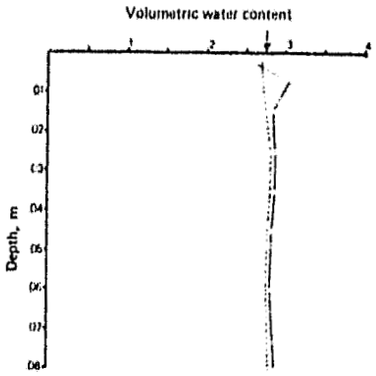

a) 2 days after irrigation

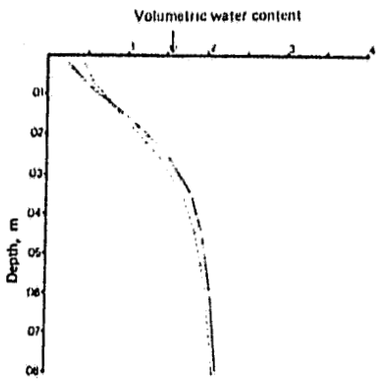

b) 14 days after irrigation

FIG. 3 SOIL MOISTURE PROFILES OF AVONDALE LOAM

————	day)	measured
- - - - - - - -	night)	
arrow		calculated from thermal inertia

2274

REPRODUCIBILITY OF THE
ORIGINAL PAGE IS POOR

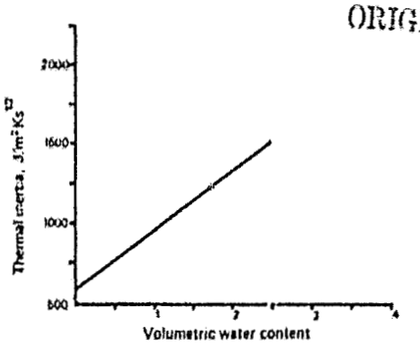

FIG. 4 THERMAL INERTIA - WATER CONTENT RELATIONSHIP FOR AVONDALE LOAM

TABLE I. INPUT TO "TELL-US" ALGORITHM

Datum	How to determine	Remarks
1. Day surface temperature	HCMM/airborne scanning	Time of observation variable
2. Night " "	" " "	" " " "
3. Albedo	" " "	
4. Surface aerodynamic roughness	Estimation from land-use map	If not available, to be derived from LANDSAT imagery
5. Slope direction	Topographical map	
6. Slope dip	" "	
7. Sub-surface temperature	Measurement/Estimation	At 1 m depth
8. Initial surface "	" "	At midnight
9. Solar irradiance	Radiometer	Every hour
10. Wind speed	Anemometer	
11. Air temperature	Dry and wet bulb thermometer	
12. Air specific humidity		

Weather Station

2275

REPRODUCIBILITY OF THE ORIGINAL PAGE IS POOR

TABLE II. TOTAL DAILY EVAPORATION [mm/day]

Days after irrigation	Measured by lysimeter	Calculated with TELL-US
2	-5.84	-6.48
6	-1.43	-0.59
14	-0.86	+1.63

(+ : condensation)

TABLE III. JOINT FLIGHT EXPERIMENT - MEASURED SURFACE TEMPERATURES OF BARE SOIL

Field	Time	Radiative Surface Temperature °C		
		Surface	Airborne	Airborne corrected
NW	Night	4.0 ± 0.6*	3.0 - 4.5	2.9 - 4.4
	Day	28.2 ± 1.5	26 - 29	27 - 30
SE	Night	2.4 ± 0.7	3.0 - 4.5	2.9 - 4.4
	Day	23.9 ± 2.2	23 - 26	24 - 27

(* : ± standard deviation)

TABLE IV. JOINT FLIGHT EXPERIMENT - MEASURED SOIL MOISTURE PERCENTAGE AND CALCULATED PARAMETERS RELATED TO SOIL MOISTURE

Field	Soil Moisture Percentage (weight) 0-3 cm	0-15 cm	Thermal Inertia	Relative humidity
NW	9.0 ± 0.9*	32.2 ± 0.7	1700	0.27
SE	10.6 ± 2.2	28.6 ± 1.8	1300	0.32

(* : ± standard deviation)

2276