N O T I C E

THIS DOCUMENT HAS BEEN REPRODUCED FROM MICROFICHE. ALTHOUGH IT IS RECOGNIZED THAT CERTAIN PORTIONS ARE ILLEGIBLE, IT IS BEING RELEASED IN THE INTEREST OF MAKING AVAILABLE AS MUCH INFORMATION AS POSSIBLE

NASA CR-
160396

(NASA-CR-160396) SHUTTLE GPS R/PA CONFIGURATION AND SPECIFICATION STUDY Final Report (LinCom Corp., Pasadena, Calif.) 56 p HC A04/MF A01 CSCL 09C

N80-13360

Unclas
G3/33 46254

RECEIVED
NASA STI FACILITY
ACCESS DEPT.

LinCom Corporation
P.O. Box 2793D, Pasadena, Calif. 91105

LinCom

FINAL REPORT

SHUTTLE GPS R/PA CONFIGURATION AND SPECIFICATION STUDY

PREPARED FOR

NASA JOHNSON SPACE CENTER
HOUSTON, TX 77058

AND

ROCKWELL INTERNATIONAL
DOWNEY, CA 90241

UNDER CONTRACT NAS9-15815

PREPARED BY

R. W. D. BOOTH
W. C. LINDSEY

LINCOM CORPORATION
P.O. BOX 27930
PASADENA, CA 91105

OCTOBER 30, 1979

TR-1080-1779

LinCom

TABLE OF CONTENTS

		PAGE
I.	SUMMARY	1
II.	SPECIFICATION CHANGES OR CORRECTIONS	1
	1.0 Introduction	1
	2.0 TTFF	2
	3.0 Calibration	5
	4.0 Dynamics	8
	5.0 Preamplifier	8
	6.0 Oscillator Specification	10
	7.0 Final Notes Regarding the Specification	10
III.	AJ PROPERTIES OF BASELINED SHUTTLE/GPS NAVIGATION SYSTEM	13
	1.0 Introduction	13
	2.0 Jamming Scenario	15
	3.0 Shuttle/GPS Receiver Vulnerabilities	19
	4.0 Possible Modifications to Shuttle/GPS Receiver in Order to Improve AJ Margin	27
IV.	USE OF GROUND BASED TRANSMITTERS IMPACT	29
	1.0 Introduction and Summary	29
V.	PROPERTIES OF SINGLE CHANNEL TEST SET	37
	1.0 Introduction and Summary	37
VI.	R/PA - ANTENNA INTERCONNECTION CONFIGURATIONS	39
	1.0 Introduction and Summary	39
VII.	AVERAGING INTERVAL FOR DELTA RANGE (DOPPLER) MEASUREMENT	44
	1.0 Introduction	44
	2.0 Analysis	44

TABLE OF CONTENTS (Cont'd)

PAGE

VIII. INTERFEROMETRY TECHNIQUES FOR ORBITER ATTITUDE MEASUREMENT 49

1.0 Introduction 49

2.0 Analysis 49

I. SUMMARY

This report serves to document the LinCom effort in supporting the JSC study of the use of the GPS navigation system on the Space Shuttle. LinCom has been tasked to primarily support the writing of a technical specification for a GPS receiving system dedicated to Space Shuttle use. The portions of the specification that received the most attention were the sections related to the various hardware functions including acquisition, tracking and measurement. The results of this phase of the contract is contained in Section II of this report. In addition to the specification determination carried out by LinCom over the past year, several questions were raised at the GPS panel meetings that were answered by LinCom. A major task was the evaluation of the AJ performance of the baselined GPS systems. This is covered in detail in Section III. Other topics addressed by LinCom include the impact on R/PA design of the use of ground based transmitters, problems involved with the use of single channel test sets, utility of various R/PA antenna interconnection topologies, the choice of the averaging interval for delta range measurements and finally a brief examination of the use of interferometry techniques for the computation of orbiter attitude were undertaken. These topics are covered in the remaining areas of the report.

II. SPECIFICATION CHANGES OR CORRECTIONS

1.0 Introduction

This part of the Final Technical Report consists primarily of a critique and/or rewrite of certain portions of the Rockwell Space Shuttle Orbiter/Global Positioning System Specification, Advance Copy, dated August 31, 1979. In particular the areas of interest are those

areas that have been previously investigated by LinCom. These include TTFF, dynamics, C/N_0, preamplifier, calibration, and other hardware/system related topics peculiar to the Shuttle/GPS navigation problem.

2.0 TTFF

This appears to be a topic of much concern. This specification is one of the key specs since much of the R/PA complexity is determined by how fast the receiver must acquire in order to meet the TTFF requirement. The present TTFF requirements are spelled out in Section 3.2.1.2.6.1 under Acquisition Requirements.

Apparently it is desired that during phase III the GPS system can be used to obtain a position fix prior to Main Engine Cutoff. This leads to a requirement that acquisition be performed in a 3g+ environment. This environment presents a fairly large stress on the acquiring loops but should be achievable as long as the acceleration data is available to the R/PA in some form or another. This may be achieved by either making the IMU output directly available to the R/PA or incorporating the IMU data into the GPC state vector and making this new state vector available once every 1/4 second (approximately). The reasoning behind providing either the IMU output or an updated state vector is as follows. The acceleration of 3g's corresponds to a change in doppler of about 160 Hz/second. This is fast enough a change to cause a severe problem in the code acquisition circuits since the signal may pop out of the predetection filter after a second or so.

There are additional requirements that should be placed on the TTFF specification, in particular, the accuracy required after the specified length of time and the minimum C/N_0 under which acquisition

needs to be performed. In addition the false alarm rate specified for the code phase search algorithm is probably unnecessary since what is really needed is the ultimate accuracy required. By requiring the ultimate accuracy desired at the end of the TTFF interval then the false alarm rate is a moot point: an accurate fix is not possible if the sequential detector has false alarmed and the receiver makes incorrect pseudorange and pseudorange rate measurements.

These notes are incorporated into the following revised specification.

3.2.1.2.6.1 Acquisition Requirements. The time-to-first-fix (TTFF) is defined as follows: TTFF is defined as the total time required for the R/PA to compute a navigation solution based on pseudorange and range rate measurements to three or more visible GPS NAVSTARS. The accuracies of the pseudorange and range rates used in computing the navigation fix are listed in Table 3-3.

The following conditions are present:

a. R/PA receiver and oscillator are thermally stable.

b. An accurate navigation fix was made 600 seconds prior to the moment three or more GPS NAVSTARS became visible. An accurate navigation fix is defined as four or more successive iterations of the navigation solution.

c. During the 600 seconds between the last accurate navigation fix and the moment the three or more GPS NAVSTARS become visible there are no (i.e. zero) GPS NAVSTARS visible.

d. There exists a sustained vehicle acceleration of 3g's (30 m/sec^2) during the 600 seconds from the last accurate fix and the moment three or more GPS NAVSTAR's become visible.

This 30 m/sec^2 acceleration is sustained throughout the TTFF interval.

e. Ephemerides of the three or more visible GPS NAVSTARS are not older than one hour.

f. The acquisition, tracking and measurements are to be performed at a C/N_0 of 31.6 dB (L1-P) and C/N_0 = 34.6 (L1-C/A).

g. For the case when only three (3) GPS NAVSTARS are visible it is required that the pseudorange accuracy of Table 3-3 be replaced with an absolute range accuracy of 4.5 m (1σ) P-code.

h. The GPC state vector consisting of orbiter position, velocity and altitude is available at a rate of 2 Hz. The staleness of this state vector is _____ seconds.

i. One cycle through the NAV filter is required.

The required TTFF based on the conditions listed above is as follows:

TTFF Requirements

Table 3-6

Position Uncertainty (3σ)	74,100 m
Velocity Uncertainty (3σ)	61 m/s
Acceleration Uncertainty (3σ)	1 m/s^2
Acquisition Probability	.9
TTFF (Normal Mode C/A→P)	51 seconds
TTFF (Direct P)	TBS
Acquisition Probability	.99
TTFF (Normal Mode C/A→P)	63 seconds
TTFF (Direct P)	TBS

End of Suggested Specification on TTFF

Note that the TTFF numbers are fairly generous as long as the above tabulated assumptions are taken into account. The fact that the receiver is warmed up and has a previous accurate fix allow the AGC to stabilize and the alert algorithm or satellite selection process to be done prior to the onset of visibility of the 3 or more NAVSTARS. Requirement f above is included so that a stable g-insensitive oscillator such as a rubidium is required in order to allow navigation with three NAVSTARS.

An illustration of the derivation of TTFF is included in Figure 1 of this report. A RID was submitted to Rockwell at the SDR on this topic.

3.0 Calibration

The problem of calibration is related to the various group delays present in the receiver. There are many sources of these various group delays. In a multichannel receiver the group delay through one channel may be different from the group delay in the other channels; thus, the pseudorange measurement to any particular satellite will vary from channel to channel. In addition the ionospheric effects on the signal introduce another large group delay. These ionospheric effects can be estimated by performing another pseudorange measurement at L_2 and appropriately scaling the results. Unfortunately this introduces other group delay variations since the delays at L_1 is different than the delay at L_2. The result is that the L_1-L_2 ionospheric measurement is offset by a bias that is a function of the difference in the two group delays.

These various group delay variations can lead to a large rms navigation error. Depending on how the R/PA is configured these group delay variations may or may not be important. For example, if only one antenna is used then it is possible to use a one or two channel receiver in a sequential fashion such that the various group delay variations are totally unimportant! This is done in the latest GPSPAC configuration. This method could be used by the Space Shuttle/GPS R/PA although probably only on orbit. If the multiple antenna scheme is used whereby each R/PA can at its discretion utilize signals from any one of six antennas then each antenna/preamp configuration will introduce its own L_1-L_2 bias. These, unfortunately, cannot be removed by a GPSPAC type navigation method. In this case the L_1-L_2 biases must be calibrated. This calibration must be done by transmitting both an L_1 and L_2 signal to the orbiter while it is on the pad. This signal must be generated by a test generator of some description: There are several reasons for requiring that the L_1/L_2 test signal be generated externally to the R/PA and by an external test generator.

The first reason is that in order to adequately calibrate all of the possible sources of the L_1-L_2 bias a GPS like signal must be injected ahead of the antenna. This is necessary because of the narrow bandwidth of the antenna itself and the consequential significant contribution to the group delay. The injection of a GPS signal ahead of the antenna is at best difficult and is most easily achieved by generated the signal external to the Shuttle. Even if the group delay variations induced by the antenna are ignored and it is desired to inject a signal ahead of the preamp and calibrate the L_1-L_2 variations induced by the preamp

then the problem is the requirement for an additional cable for each R/PA to be run to each preamp plus the problem of the generation of many calibration signals by each of the R/PA's in an asynchronous fashion. This last effect is not to be taken lightly. If the R/PA's must be required to generate the calibration signals then each R/PA must calibrate each preamp leading to the generation of many (possible interfering) signals at the inputs of the preamps.

The last reason for generating the GPS calibration signal external to the shuttle is that there is simply no other way to do it. The existing GPS signals recoverable from the NAVSTAR's propagate through the ionosphere themselves and are therefore unusable as calibration signals.

Finally it is noted that for ascent and descent where the ultimate achievable GPS accuracies are not required then it may be possible to ignore the calibration problem altogether.

In summary the following details are noted:

- All calibration may be eliminated for on-orbit NAV if the R/PA and antenna/preamps are configured in a similar fashion to the GPSPAC.
- L_1-L_2 plus channel calibration will be required if it is desired to use multiple antennas on orbit.
- Calibration <u>probably</u> not required in order to meet ascent/descent NAV accuracies.
- Any calibration is most easily achieved by calibrating the GPS sets on the ground preflight using a ground based test set.

A RID was submitted at the SDR with regards to the calibration problem although its content was considerably different than the above discussion. The ground based preflight calibration procedure was suggested by B. Batson.

4.0 Dynamics

Section 3.1.2.4.1.2.1 lists the maximum Doppler shift and Doppler rate at ±60 KHz and 300 Hz/sec respectively. The maximum Doppler shift between a 9×10^3 m/sec vehicle and a moving NAVSTAR is more like ±50 KHz although ±60 KHz is probably all right. The Doppler rate, however is more like 160 Hz/sec for a relative range acceleration of 3g's and at most 210 Hz/sec at 4g's. The 300 Hz/sec is too conservative.

In addition Section 3.2.1.2.5.3.1 requires the R/PA to maintain the same TBD accuracy under a sustained 3g acceleration for periods of time as long as 15 minutes. This needs to be reworded and perhaps a typical profile worked into this specification. As it stands the specification leads to unrealistic Doppler shifts if it is interpreted to require the ability to sustain a total of 3g's for 15 minutes. This point has been discussed with Andy Van Leeuwen and it was agreed to include the g-loading profile.

5.0 Preamplifier

The main complaint with the preamplifier specification at is now stands is the lack of definition of an out of band overload specification. As it stands now in order to meet the 2.0 dB noise figure requirement (3.2.1.3.4 in the preamp section) the filtering required in order to meet the frequency response requirement (3.2.1.3.2) will have to be placed after the amplification stage in the preamplifier. This means that the input of the gain stage is coupled to the antenna through a wideband

TTFF SEQUENCE

1. ASSUMES WARMED UP RECEIVER.
2. ASSUMES AGC DWELL FOR C/A ACQUISITION COMPLETED (INCLUDES VCO CALIBRATION IF NECESSARY)
3. ACQUISITION ON C/A
4. TWO CHANNELS
5. C/N_0 = 31.6 (P,L1)(REQUIRED FOR P-TRACKING ACCURACY)
6. SATELLITES SELECTED
7. WORST CASE POST BLACKOUT POSITION UNCERTAINTIES
8. NO CLOCK PHASE ERRORS
9. EPHEMERIS KNOWN (NO DATA COLLECTION)

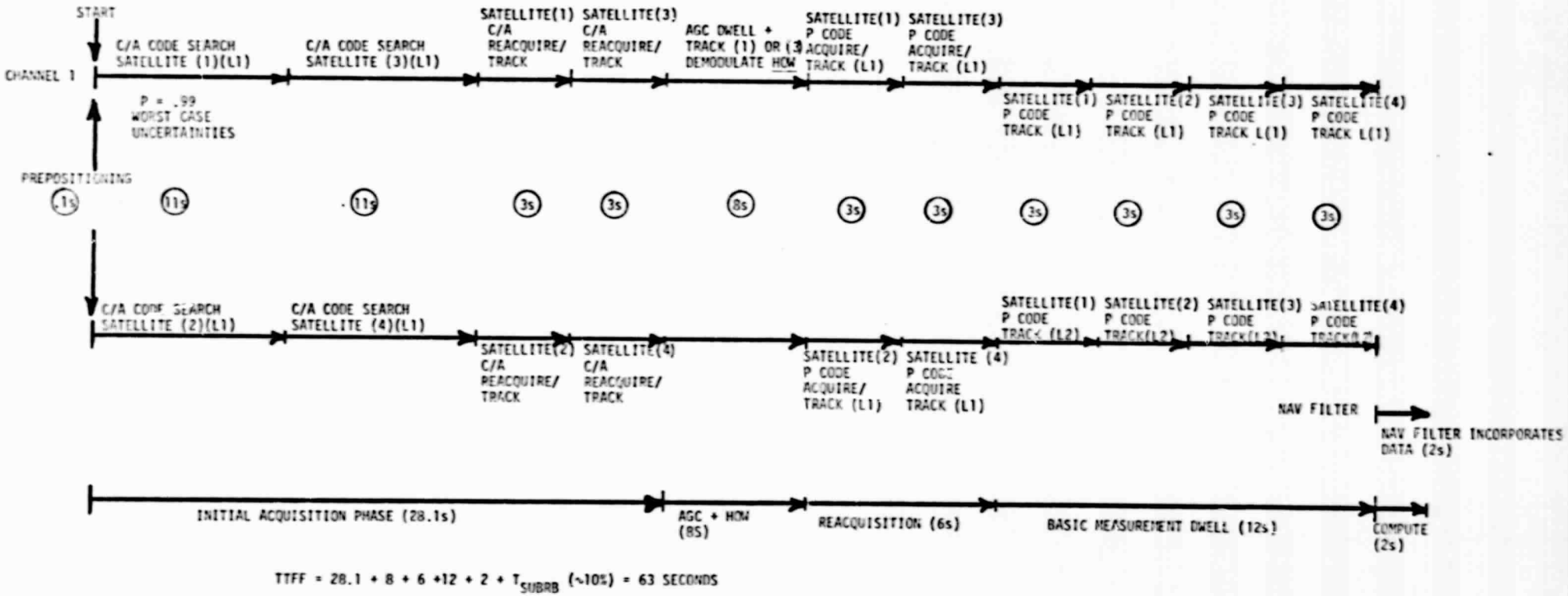

$$TTFF = 28.1 + 8 + 6 + 12 + 2 + T_{SUBRB}\ (\sim 10\%) = 63 \text{ SECONDS}$$

Figure 1. Typical TTFF Sequence.

matching network. The preamplifier now becomes sensitive to overload due to strong out of band signals.

Specification of an out of band overload specification will force the design to include some filtering ahead of the gain stage. This will consequently raise the noise figure of the preamp. Probably a useful compromise is to require a three pole filter ahead of the active devices and relax the noise figure to 2.5 dB at 25°C. The noise figure will most assuredly rise if the preamp must operate in a 93°C (200°F) environment, probably to 3.0 dB or larger.

An approximate design estimate based on the present Magnavox Manpack design was presented at the 13th Panel Meeting. This design is illustrated in Figures 2 and 3.

It would be nice if there was more volume to cram the preamp parts.

6.0 Oscillator Specification

The oscillator of sensitivity (3.2.1.2.7.5) is consistent with a crystal oscillator. This is not consistent with an absolute range measurement capability if that is what is wanted. The g sensitivity of a rubidium is about 5×10^{-12}/G.

7.0 Final Notes Regarding the Specification

- Table 3-5 probably ought to include the time accuracy as well as the position accuracy required.
- 3.2.1.2.3.4/5 - the difference between states 4 and 5 seems to be that improved accuracies are required under state 5 when data demodulation is being performed. Under state 4 it appears that data demodulation is not being performed and the ultimate accuracies are not required. For the operation of a sequential receiver accurate measurements are required while data demodulation is not

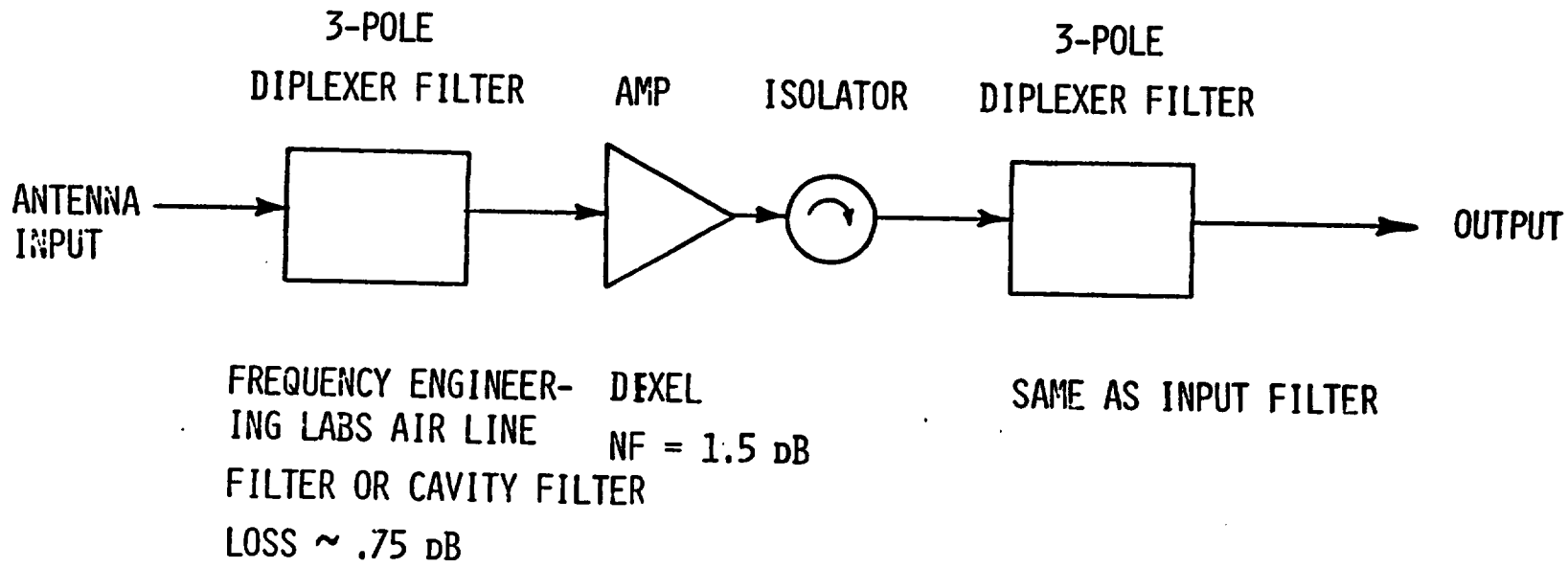
3-POLE
DIPLEXER FILTER
AMP
ISOLATOR
3-POLE
DIPLEXER FILTER
ANTENNA
INPUT
OUTPUT
FREQUENCY ENGINEER-
ING LABS AIR LINE
FILTER OR CAVITY FILTER
LOSS ~ .75 DB
DEXEL
NF = 1.5 DB
SAME AS INPUT FILTER

Figure 2.

- PREAMP DESIGN
  - OVERALL NF $\leq$ 2.5 dB SPEC = 2.0 dB
  - BANDWIDTH ~35 MHz (-3 dB) SPEC $\leq$ 36 MHz
    ~160 MHz (-65 dB) SPEC = 200 MHz

CHANGE: ●DYNAMIC RANGE: A. 100 dB -144 dBm to -44 dBm)

B. PREAMP NOT DAMAGED BY +30 DBm CW SIGNAL AT ANY FREQUENCY

C. AMPLIFIER NOT DESENSED WITH -26 dBm CW SIGNAL AT FREQUENCY $f \leq F_0 - 50$ MHz AND $f \leq f_0 + 50$ MHz (REQUIRES APPROXIMATELY 3 POLES AHEAD OF AMPLIFIER TO HANDLE THIS.)

D. NOISE FIGURE $\leq$ 2.5 dB

Figure 3.

being performed. It is suggested that the reduced accuracy requirement for state 4 be dropped.

III. AJ PROPERTIES OF BASELINED SHUTTLE/GPS NAVIGATION SYSTEM

1.0 Introduction

This section discusses the AJ properties of the envisioned Shuttle/GPS receiver. This receiver is loosely modeled after the Magnavox GPSPAC.

The AJ protection provided by any particular receiver/waveform structure is determined exclusively by the jamming scenario. Quite simply, some jammers work better against a particular receiver/waveform structure than others. This report serves to document the many types of jamming and the susceptibility of the Shuttle/GPS receiver to these different jammers. The numbers are presented in terms of J/S or the ratio of jammer power to signal power as measured at the receiver front end. These J/S numbers are translated into jammer EIRP based on an assumed geometry.

Briefly, the AJ investigation indicates the following rather general results:

- AJ protection of receivers depends on jammer sophistication.
- GPS signals fairly "weak", i.e., low desired received power requires sensitive receiver resulting in low jammer EIRP for a given J/S margin.
  - GPS Signal strength coverage optimized for near earth vehicles.
- Poor-to-nonexistent AJ protection provided by C/A code means the acquisition phase of the GPS receiver operator is the most jam sensitive.

These general AJ properties are directly due to the present GPS signal structure design and power levels and as such already present the GPS user with a difficult AJ protection problem. The last note is particularly severe since the GPS receivers must as a rule reacquire new satellites periodically.

In addition to the above rather general comments, the particular Shuttle rcceiver design possesses the following properties:

- All AJ protection provided by spatial discrimination of antenna and frequency spreading of P-code.
- AJ protection of P-code is about ~35-38 dB depending on receiver function (against an unsophisticated jammer).
- Front-to-back ratio of antenna ~70 dB so AJ is improved 70 dB for jammers in back of beam (Rockwell data/Ed Rosen).
- Antenna provides no AJ protection for jammers in antenna field of view (approximately hemispherical).
- Least AJ protection provided when receiver is acquiring the C/A code and the jammer lies in the antenna field of view.

The amount of AJ protection provided depends critically on the jamming configuration. In spite of the AJ margin of 35 to 38 dB provided by the P-code against unsophisticated jammers (CW tone, noise, etc.) the jammer EIRP required for a ground based jammer in order to exceed the receiver threshold is only 23-26 dBW when both the jammer and the desired GPS satellite are in the antenna fields of view! This can occur for certain orientations of the orbiter.

Finally, it is concluded that the only method of combatting jammers is through the use of a sophisticated steerable antenna. Some

AJ improvement can be obtained against an unsophisticated jammer by lowering the receiver threshold. This is accomplished by tightening receiver bandwidths, increasing the number of channels and possibly directly aiding the receiver tracking loops. Implementation of either of the above techniques requires the utilization of sophisticated hardware with the implied increase in software and dollar costs.

2.0 Jamming Scenario

The AJ protection provided by a particular receiver/waveform structure depends critically on the particular jamming scenario or configuration,as pointed out in the summary. The jamming scenario is described by the following:

- Jammer Threat Classification and Waveform
  - Intelligent
  - Unintelligent
- Antenna/Geometry Configuration
- Jammer Power Levels

These three features tend to be equally important in specifying the jamming scenario. A pictorial illustration of many jamming scenarios is contained in Figure 4.

The first feature is broken into two classifications: intelligent jamming and unintelligent jamming. The unintelligent jamming consists of the "brute force" technique whereby a signal is radiated in such a fashion that some of this signal is received by the GPS receiver. This type of jamming or interference can be either intentional or unintentional. The unintentional jammer tends to be incidental radiation from some signal source and the intentional jammer tends to

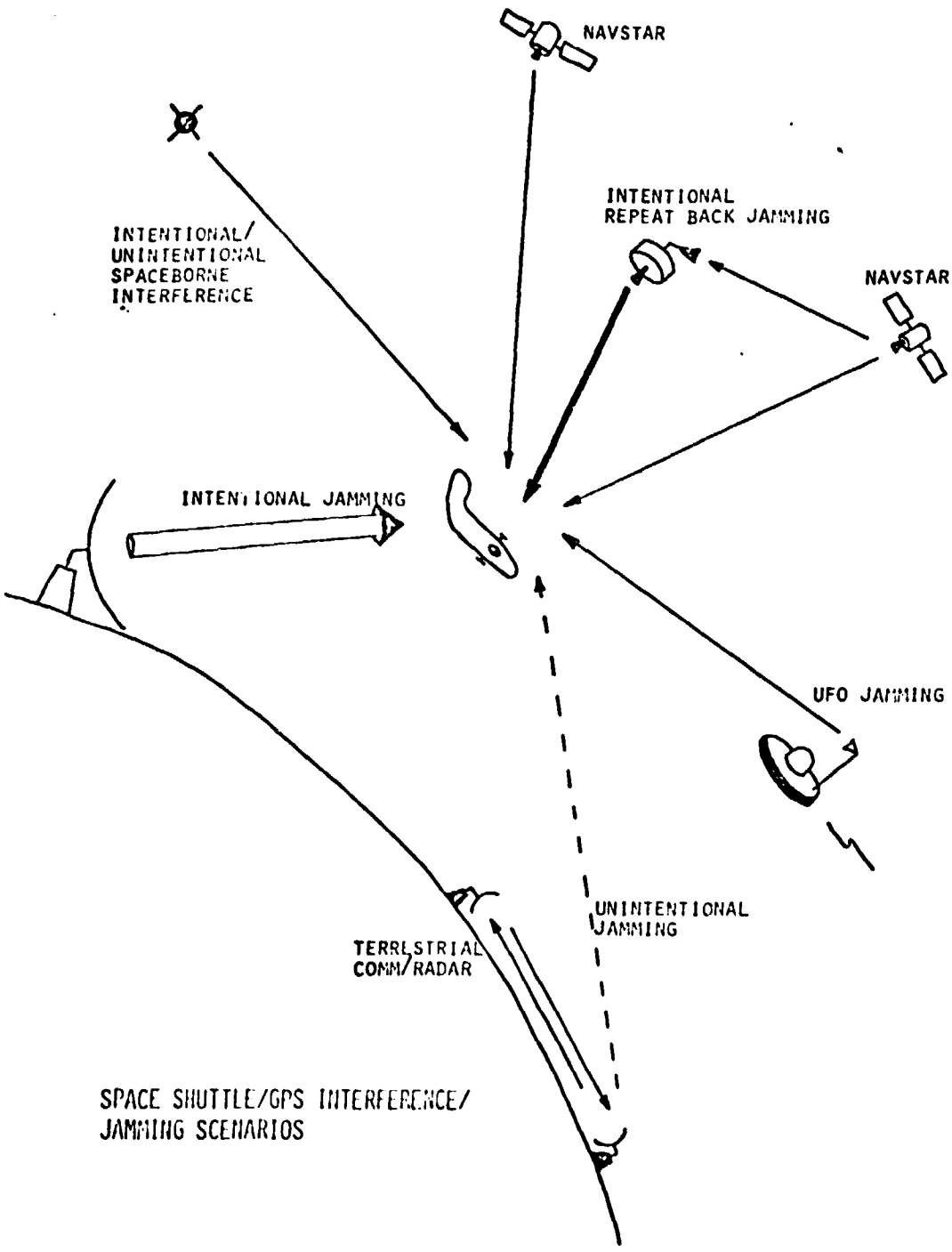
NAVSTAR
INTENTIONAL/
UNINTENTIONAL
SPACEBORNE
INTERFERENCE
INTENTIONAL
REPEAT BACK JAMMING
NAVSTAR
INTENTIONAL JAMMING
UFO JAMMING
UNINTENTIONAL
JAMMING
TERRESTRIAL
COMM/RADAR
SPACE SHUTTLE/GPS INTERFERENCE/
JAMMING SCENARIOS

Figure 4.

be radiating a signal specifically in the direction of the receiver with the sole intention of disrupting navigation. The signal structure of these unintelligent jammers is generally unrelated to the actual navigation (GPS) signal being used, thus the jammer does not radiate a GPS like signal in an attempt to spoof the user. Typical unintelligent jammer characteristics are summarized in Figure 5.

A more sophisticated jamming strategy involves spoofing the GPS receiver by generating signals that duplicate or are very similar to the GPS signals. Since the total time delay is the parameter of interest in the GPS signal, the GPS receiver can be very easily mislead by simply changing the time delay of a signal transmitted from a NAVSTAR satellite. Changing the time delay is readily accomplished by intercepting a portion of the radiated NAVSTAR signal and re-broadcasting it. If the signal power level of this bogus signal is larger than the desired NAVSTAR signal and the delay is not so long that the delay falls outside the receiver search aperture then the GPS receiver may lock to the undesired signal. While it may be possible to design receiver algorithms that acquire only the earliest possible signal delay, these algorithms are very likely to fail when acquiring the C/A code. This is due to the sidelobe locking problem that can occur when searching over the uncertainty region of the C/A code. Finally, the possibility exists of an orbiting GPS satellite signal simulator. This jammer could merely radiate copies of all the NAVSTAR signals with sufficient power that no accurate navigation would be possible. The only clue that the received

- UNINTELLIGENT JAMMER CHARACTERISTICS
  - UNINTENTIONAL
    - WIDEBAND NOISE
      - EXPERIMENTAL LINKS
      - TERRESTRIAL DATA LINKS
    - NARROWBAND NOISE
      - TERRESTRIAL DATA/SPEECH LINES
    - PULSE
      - RADAR
    - CW TONE
      - RANDOM CARRIERS
  - INTENTIONAL
    - WIDEBAND NOISE
    - PARTIAL BAND NOISE
    - PULSE
    - MULTITONE
    - SINGLE TONE

Figure 5.

signals are bogus comes from the directional properties of the jammer: the jamming signals came from a different direction than the desired signals. Properties of the intelligent jammer are summarized in Figure 6.

The second ingredient to the jamming scenario is the antenna/geometry consideration. The location and antenna gain of the jammer and GPS receiver also tend to determine the effectiveness of the jammer. A GPS receiver equipped with a spatially selective antenna can employ this selectivity to reduce the impact of the jammer. In addition, a jammer located physically close to the GPS receiver may more easily disrupt the detection of the navigation signals than a jammer located physically removed from the GPS receiver.

Finally, the jamming power is the final constituent in the overall jamming scenario. Even with a clever jamming strategy and a favorable antenna/geometry configuration, without sufficient power the jammer will be ineffective. Furthermore, with plenty of power, the strategy and/or antenna/geometry considerations become less and less important!

3.0 Shuttle/GPS Receiver Vulnerabilities

The envisioned Shuttle/GPS receiver provides a nominal amount of AJ protection, depending on the particular jamming environment in which the set is required to function. In general, the receiver must acquire and track four distinct NAVSTAR satellites and measure pseudo range and range rate (Doppler) for each of the four satellites. The disruption of any of these functions can lead to navigation errors. In particular, disruption of the acquisition phase is very serious

- INTELLIGENT JAMMER CHARACTERISTICS
  - INTENTIONAL
    - JAMMER IS IN POSITION TO INTERCEPT PORTION OF TRANSMITTED SIGNAL
    - JAMMER "ALTERS" SIGNAL IN SOME MANNER AND RERADIATES THIS SIGNAL TOWARDS RECEIVER
    - JAMS BY CONFUSING RECEIVER

Figure 6.

since acquisition is required in order to perform the pseudo range and range rate measurements.

The AJ protection provided by the envisioned Shuttle/GPS receiver during acquisition is minimal. Part of this stems from the nature of the GPS system itself as pointed out in Section 1; the signals are weak and the C/A code has no AJ capability in spite of the oft quoted (and misunderstood) statement that the C/A code is "only" 10 dB worse than the P-code (against unsophisticated jammers). It has been reported by Steve Lagna of SAMSO that empirical results indicate that the J/S margin for the C/A code is only about 12.5 dB. This was based on a CW jammer. This means that a CW tone 12.5 dB larger than the desired GPS signal is sufficient to prevent acquisition and tracking of that particular GPS signal. This is next to no AJ protection at all. (Note that LinCom analytic estimates of the C/A code AJ margin is on the order of 17 dB which is in rough agreement with the experimental results.) The other weakness (from an AJ point of view) of the Shuttle/GPS receiver is the antenna. Presently, it is intended to use a nearly hemispherical coverage antenna on the top and bottom of the Shuttle. This antenna coverage provides the least amount of spatial discrimination against either interference or jamming.

On the plus side of the coin is the fact that the Shuttle/GPS antenna does provide some spatial selectivity, especially against unsophisticated ground base jammers. This selectivity is only usable when the jammer is in the back of the antenna beam. Insofar as it may be guaranteed that this wide antenna beam can be pointed away from possible jamming sources then the front-to-back ratio of

the antenna can be used. The attenuation of signals received in the back of the beam is in excess of 70 dB. A summary of the GPS receiver vulnerabilities during acquisition is contained in Figure 7. It is noted that the AJ margin provided by the P-code during steady state tracking (given that tracking is eventually achieved) is the previously mentioned 35-38 dB.

A summary of the AJ margin of the Shuttle/GPS receiver during acquisition and tracking is contained in Figures 8 and 9. These numbers apply to the case of an unsophisticated CW jammer. Assuming several specific geometries, the AJ margins can be converted into jammer EIRP's. The orbiter is assumed to be on an approximately 320 Km orbit. The two jamming geometries correspond to the cases where the jammer is on the same orbit as the GPS NAVSTAR satellites (12 hr orbit) or the jammer is on a 640 Km orbit or on the ground. The case where the jammer is on a 640 Km orbit is considered to be the same as the case where the jammer is on the ground since the jammer to orbiter distance is approximately the same in both cases. The results are contained in Figure 10. Note that this last case corresponds to very low and easily achievable jammer powers if the orbiter is oriented so that the jammer is in the antenna field of view. These numbers increase by 70 dB if the orbiter is oriented so that the jammer is in the back lobe of the beam.

Finally, the case of the sophisticated jammer was considered. For this case a repeat back jammer was assumed which merely repeats the GPS signal from one or more GPS NAVSTAR satellites. Due to the hemispherical coverage of the Shuttle/GPS antenna the margin against

- GPS RECEIVER VULNERABILITIES
  - RECEIVER COMPUTES RANGE/RANGE RATE ESTIMATES
  - EXTERNAL EFFECTS THAT ALTER THESE ESTIMATES PRODUCES POSITION ERRORS
  - TWO RECEIVER MODES
    - ACQUISITION
      - DESIRED SIGNAL PROPERTIES UNKNOWN
      - RECEIVER BANDWIDTHS WIDE TO ACCOUNT FOR UNCERTAINTIES
    - TRACKING
      - DESIRED SIGNAL PROPERTIES KNOWN
      - RECEIVER BANDWIDTHS TIGHTER
  - WITHOUT ACQUISITION RANGE/RANGE RATE NOT MEASURABLE
  - JAMMING CAN INHIBIT ACQUISITION
  - ACQUISITION OF WRONG SIGNAL (REPEAT BACK JAMMER) GIVES INCORRECT RANGE/RANGE RATE MEASUREMENT! (NAV SOLUTION WORTHLESS)
  - GPS RECEIVERS MOST VULNERABLE DURING ACQUISITION

Figure 7.

- BASELINE SHUTTLE/GPS RESISTANCE TO UNINTENTIONAL INTERFERENCE DURING ACQUISITION
  - C/A CODE PROVIDES LEAST AJ MARGIN AGAINST INTERFERENCE WITH A BANDWIDTH $\leq$ 1 KHz
  - WORST CASE JAMMER IS CW TONE
  - ANTENNA PROVIDES SOME SPATIAL PROTECTION AGAINST TERRESTRIAL INTERFERENCE SOURCES
  - AJ MARGIN (J/S) OF C/A CODE 12.5 dB (S. LAGNA/SAMSO)
  - ANTENNA PATTERN IS DOWN 70+ dB* ON BACK OF BEAM MARGIN
  - AJ MARGIN AGAINST UNINTENTIONAL INTERFERENCE
    - 12.5 dB (JAMMERS IN MAIN ANTENNA PATTERN)
    - 82.5 dB (JAMMERS ON BACK OF BEAM)

*NEGLECTING CROSS POLARIZATION EFFECTS (ED ROSEN/ROCKWELL)

Figure 8.

- BASELINE SHUTTLE/GPS RECEIVER RESISTANCE TO UNINTENTIONAL INTERFERENCE DURING TRACKING
  - P CODE USED DURING TRACKING
  - WORST CASE JAMMER IS CW TONE
  - ANTENNA PROVIDES SOME SPATIAL PROTECTION AGAINST TERRESTRIAL INTERFERENCE SOURCES
  - AJ MARGIN (J/S) OF P CODE IS (GPSPAC BANDWIDTHS)
    - J/S ≈ 36 dB DATA CHANNEL
  - AJ MARGIN (J/S) AGAINST UNINTENTIONAL INTERFERENCE DURING TRACKING (RANGE/RANGE RATE MEASUREMENTS)
    - 36 dB (JAMMERS IN MAIN ANTENNA PATTERN)
    - 106 dB (JAMMERS IN BACK OF BEAM)

Figure 9.

- JAMMER EIRPS
  - ORBITER ON 320 KM ORBIT
  - JAMMER ON SAME ORBIT AS NAVSTAR
    - EIRP = 39.3 dBW ACQ
    - EIRP = 62.8 dBW TRACK
  - JAMMER ON 640 KM ORBIT (OR IN THE EARTH)
    - EIRP = 1.17 dBW ACQ
    - EIRP = 24.7 dBW TRACK
  - JAMMER ON BACK OF BEAM (TERRESTRIAL)
    - EIRP = 71.2 dBW ACQ
    - EIRP = 94.7 dBW TRACK

Figure 10.

this jammer is 0 dB. These results are contained in Figure 11.

4.0 Possible Modifications to Shuttle/GPS Receiver in Order to Improve AJ Margin

There are several changes then can be proposed that will considerably improve the AJ performance of the GPS receiver. None of the improvements is particularly inexpensive. The possible improvements are:

- Direct P-code Acquisition
- Threshold Reduction by Tightening Loop Bandwidths
- Processing or narrow beam antennas.

The direct P-code acquisition mode and threshold resolution improve the receiver AJ performance against the unsophisticated unintelligent jammer. Neither of these methods offer any improvement in AJ versus the intelligent jammer.

The direct P-code acquisition mode eliminates the acquisition problems inherent in the C/A Gold codes. This is due to the enormously long period property. This means the code search phase of the initial receiver acquisition is outrageously time consuming for one of the missions critical phases, that of post blackout navigation. The time can be reduced by increasing the number of receiver channels for the post blackout scenario. In excess of 10 channels would be required to reduce the acquisition time to less than 150 seconds.

Threshold reduction can be accomplished by reducing the required C/N_0 necessary for acquisition and tracking. This is done by tightening the loop bandwidths. Loop bandwidth tightening is bounded by the dynamics problem, i.e., wide loop bandwidths are required to track the severe

- BASELINE SHUTTLE/GPS RECEIVER RESISTANCE TO INTENTIONAL INTELLIGENT JAMMING DURING ACQUISITION/ TRACKING
  - INTELLIGENT JAMMER SIMPLY REPEATS OR REBROADCASTS NAVSTAR SIGNAL WITH LARGER SIGNAL STRENGTH THAN NAVSTAR
  - REPEAT JAMMER NEED NOT CHANGE ANY PART OF SIGNAL SINCE DESIRED INFORMATION IN SIGNAL IS THE DELAY
  - SHUTTLE/GPS RECEIVER LOCKS ONTO JAMMER VERSION OF NAVSTAR SIGNAL
  - TOTAL SIGNAL DELAY IS NOW NAVSTAR/JAMMER/ SHUTTLE PATH DELAY INSTEAD OF NAVSTAR/SHUTTLE DELAY
  - NO SPATIAL PROTECTION PROVIDED BY BASELINE SHUTTLE/GPS ANTENNAS
  - J/S PROTECTION OF SHUTTLE/GPS RECEIVER = 0 dB AGAINST REPEAT JAMMERS

Figure 11.

range dynamics. The loop bandwidths can be tightened and range transients tracked only by direct loop aiding. This is accomplished by sensing the orbiter's acceleration and converting this acceleration to Doppler rate which is added to the loop filter. There are several problems with this most of which are concerned with the delays necessary to perform the measurement and perform a coordinate transformation. The properties of direct P-code acquisition and bandwidth tightening are listed in Figure 12.

Finally, the only really effective AJ technique is the use of narrow beam antenna that may be pointed at the desired NAVSTAR. This technique works for all jamming scenarios since the spatial selectivity of the antenna discriminates against all signals except the desired one. This involves a Catch-22 type of operation, however, because in order to accurately point the beam to the orbiter location, altitude and time must be known! Nonetheless, for reasonably wide tolerances on these parameters and a fairly wide beam considerable improvement in AJ may be enjoyed. The properties of the steerable array are contained in Figure 13 along with a brief description of arrays now under development.

IV. USE OF GROUND BASED TRANSMITTERS IMPACT

1.0 Introduction and Summary

In order to improve the navigation precision of the GPS system used on the Space Shuttle for certain mission phases the use of ground based GPS navigation beacons has been considered. There are several reasons that make the ground based GPS emitters attractive. The ground based emitters essentially provide better coverage especially during key mission phases such as ascent and descent. This is a

- BASELINE SHUTTLE/GPS RECEIVER CHANGES NECESSARY TO INCREASE J/S FOR UNINTENTIONAL UNINTELLIGENT JAMMERS
  - J/S = ~ 36 dB FOR P-CODE ACQUISITION
  - DIRECT P CODE ACQUISITION REQUIRES MORE CHANNELS
  - POST BLACKOUT WORST UNCERTAINTIES (PHASE AND FREQUENCY)
  - NUMBER OF CHANNELS REQUIRED TO PERFORM DIRECT P-CODE ACQUISITION FOR WORST CASE POST BLACKOUT UNCERTAINTIES ~10+ CHANNELS IN ORDER TO MEET ACQUISITION
  - DIRECT P-CODE ACQUISITION REQUIRES JAMMER EIRPS FOR ACQUISITION OF:
    - 62.8 dBw JAMMER ON NAVSTAR ORBIT
    - 24.7 dBw JAMMER ON 640 KM ORBIT/TERRESTRIAL
    - 94.7 dBw JAMMER ON BACK OF BEAM (TERRESTRIAL)
  - BANDWIDTH TIGHTENING REQUIRES DIRECT LOOP AIDING DUE TO ENTRY DYNAMICS

Figure 12.

- BASELINE SHUTTLE/GPS RECEIVER CHANGES NECESSARY TO INCREASE J/S FOR INTENTIONAL INTELLIGENT JAMMING
  - ADDITIONAL PROTECTION AVAILABLE USING SPATIAL ISOLATION PROVIDED BY A MORE SOPHISTICATED ANTENNA
    - NULLING
    - BEAM STEERING
  - PRECISE BEAM POINTING REQUIRES:
    - PRECISE ESTIMATES OF DESIRED NAVSTAR LOCATION/TIME
    - PRECISE ESTIMATES OF ORBITER ATTITUDE
    - STEERABLE ARRAY
  - STEERABLE ARRAYS NOW UNDER DEVELOPMENT
    - 36 ELEMENTS (2 FT X 2 FT)
    - 7 ELEMENTS (1 FT DIAMETER)
    - ROCKWELL/COLLINS
  - MORE SOPHISTICATED NAV SOLUTION ALLGORITHM USING > 4 NAVSTARS
  - MAJOR HARDWARE/SOFTWARE IMPACT

Figure 13.

nontrivial problem since the Phase II GPS constellation does not provide worldwide coverage at all hours of the day, in fact, the coverage is somewhat minimal. In addition, the ascent phase of the mission requires the Shuttle to fly "upside down" thus the top GPS antenna on the Shuttle is pointed down, allowing visibility only in the direction of the horizon and the bottom GPS antenna on the orbiter is pointed up, right at the fuel tank which results in zero visibility for this antenna.

The use of the ground based emitters is not without problems, however. The two main problems are the increase in background noise and exaggerated slant range dynamics. The increase in thermal noise is due to the use of ground pointed antenna to receive the ground based NAVSTAR signals. Since the antenna is pointed at the ground the antenna temperatures rise from 125°K (estimated) to 300°K (very good estimate) thus raising the system temperature by 175°K. This would increase the temperature from 205°K to 880°K or increase the system noise figure from 5.3 dB to 6.1 dB or about .8 dB loss. This is minimal since the signal strength of the transmitter may be increased to compensate for the loss. The more severe problem is the increased noise must be averaged by the AGC prior to the start of signal acquisition. This is necessary in order that the preset thresholds in the receiver set the correct false alarm rate for the sequential detector. This problem can probably be alleviated considerably by being a repetitive search strategy. Since the uncertainties are small this would result in rapid acquisition with acceptable false alarm rates and detection probabilities.

By far the most severe problem is the effect the exaggerated slant range dynamics have on the received signal. These dynamics can severely or possibly preclude both acquisition and tracking of both the GPS signals emanating from the ground transmitters and the normal NAVSTAR signals. An illustration of the slant range geometry is contained in Figure 14. The most dramatic slant range dynamic is the presence of inordinately large accelerations in the slant range that exist if the orbiter passes directly overhead of a ground based emitter. For example at an altitude of 60 miles (100 Km) the 3g requirement for the set is exceeded for orbiter velocities in excess of 1.8 Km/sec. At half that altitude the 3g spec is exceeded for velocities in excess of 1.2 Km/sec.

The problems presented by large range accelerations are severe. The acceleration causes a continuously changing Doppler shift that must be removed (approximately) if there is any hope of acquiring with the sequential detector. The removal may be done by estimating the Doppler change using approximate position coordinates or the detector bandwidth may be increased (dramatically) along with a consequential increase in the ground emitter power. Both these changes require a special mode of operation for the set. The presence of very large accelerations, such as 10g's, may require the second option just listed.

The large slant range dynamics also present a second problem. Due to the large possible variations in the absolute range, the received signal power can vary considerably. This presents a problem during acquisition since the C/A codes are sidelock sensitive. This sidelock tendency of the C/A codes (Gold codes) can result in incorrect

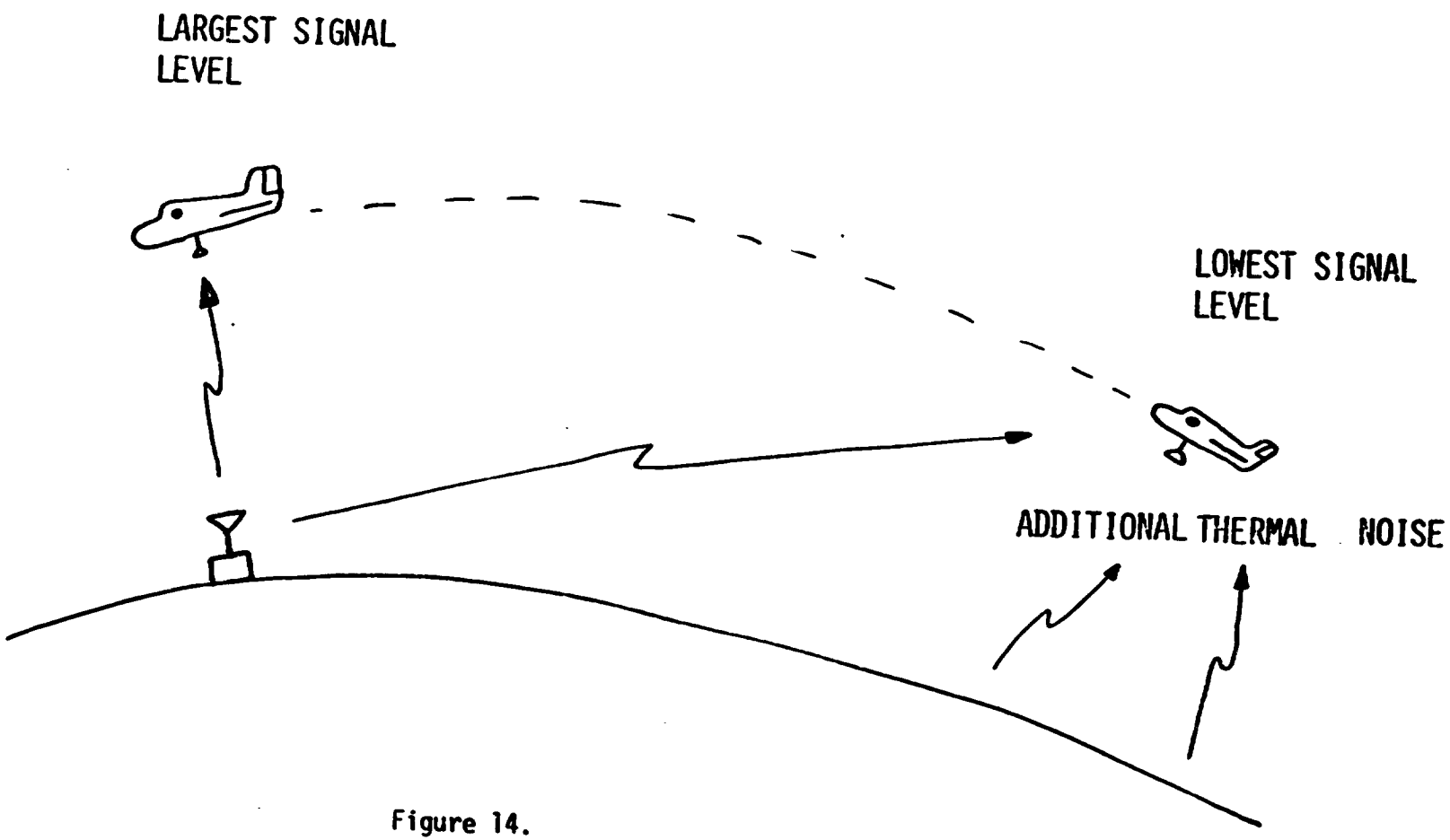
LARGEST SIGNAL
LEVEL
LOWEST SIGNAL
LEVEL
ADDITIONAL THERMAL NOISE

Figure 14.

acquisition of the ground based signal and can also interfere with the acquisition of other NAVSTAR signals in the presence of the strong ground based emitter signal.

The sidelock tendency is based on the following property of the Gold codes. The autocorrelation of the Gold codes consists of the main lobe plus many sidepeaks. These sidepeaks indicate that the code is mildly correlated at certain nonzero delays. In additon the crosscorrelation among the members of the code family exhibits this same weak correlation. While these self correlation and cross-correlation peaks are small they are large enough that if the received signal power is large enough the correlation may be strong enough to trip the receiver threshold.

The sidelock tendency can give problems in acquisition of the C/A code. If the receiver decides to acquire the ground based emitter signal the receiver may lock on a sidelobe. Furthermore, if the receiver decides to acquire a different NAVSTAR signal the receiver may lock to the strong ground based emitter signal due to the weak cross correlation of the Gold code family. The net result is an erroneous pseudorange measurement.

Since the side correlation peaks are about 24 dB below the main peak the range change need only be 12 dB or about 15 to 1 in order to produce a 24 dB variation in signal power. A solution is to taper the ground transmitter power as a function of the relative ground based emitter - orbiter range. The properties of the sidelock tendency are summarized in Figure 15.

- C/A (GOLD) CODES HAVE THE FOLLOWING PROPERTY:
  - THEY EXHIBIT POSITIVE CORRELATION FOR OFFSETS NOT EQUAL TO ZERO
  - FOR A LARGE ENOUGH SNR THE RECEIVER CAN LOCK UP ON A SIDELOBE AND PERFORM AN ERRONEOUS PSEUDO-RANGE MEASUREMENT.
  - IN PRESENCE OF STRONG SIGNAL RECEIVER MAY LOCK ONTO SIDELOBE OF STRONG SIGNAL WHEN SEARCHING FOR WEAK SIGNAL
  - THE CORRELATION PEAKS ARE 23.8 dB BELOW PEAK CORRELATION
- THEREFORE SIGNALS STRONGER THAN 24 dB ABOVE THRESHOLD OF RECEIVER MAY PRODUCE SIDELOBE LOCKING PROBLEMS
  - FIX GROUND STATION EIRP SO THAT RECEIVED SIGNAL IS 5-15 dB ABOVE RECEIVER THRESHOLD

Figure 15.

V. PROPERTIES OF SINGLE CHANNEL TEST SET

1.0 Introduction and Summary

The problem of testing the Shuttle/GPS receiver seems to be a thorny one. On the one hand is a desire to test everything in sight and be absolutely satisfied the receiver is working and on the other hand is a desire to save both time and money by testing only a few key features. At the center of the controversy is the GPS signal simulator which is used to exercise the GPS receiver. In order for the test set to thoroughly wring out the receiver a multi channel (at least 4) GPS signal simulator is necessary. This is an outrageously expensive proposition. It is desired that a single channel simulator be used. Unfortunately this presents a caldren of problems.

The main problem with testing the GPS receiver is that the receiver assumes the entire constellation is available for use. Thus, upon some initial time and position estimates supplied at initialization, the receiver chooses several desirable emitters and either sequentially (for a sequential set) or simultaneous (for a simultaneous set) acquires, tracks, and performs navigation based on these several emitters. Furthermore, the receiver casually re-evaluates the constellation and chooses other emitters periodically. If for some reason the receiver cannot find the desired NAVSTAR at the moment the receiver wants that NAVSTAR, the receiver is liable to go crazy. The receiver falls into several backup strategies and then commences searching for a new NAVSTAR. It is this asynchronous searching behavior that is the most bothersome from a testing point of view.

The test set must know the following:

- Which GPS emitters are to be examined by the GPS receiver.
- When the GPS receiver is going to look at them.

While this may on the surface appear straightforward, the emitters that the receiver wants to examine and when are determined by several facts:

- Time
- Position of set
- Constellation behavior
    - Constellation dynamics as a function of time
    - Emitter visibilities
- Actual receiver clock

The simplest (conceptually) test set would be to merely simulate the entire GPS constellation as a function of time and some initialized receiver position and let the GPS receiver do its thing.

The most straightforward hardware test set will require precise (read exact) knowledge of the set operation including hardware lines from the tested receiver to the test set so that the actual operation of the receiver may be monitored. This is necessary so that as the receiver goes through its acquisition and tracking procedures the test set can respond by generating the desired NAVSTAR signal. This way the receiver may be tricked into believing it is actually observing the GPS constellation.

In summary the test set question comes down to this:

- "Complicated" elaborate multichannel simulator requires:
    - Most Hardware
    - Least knowledge of actual set operation
    - No direct fiddling with receiver
    - TBD software

- "Simple" single channel simulator requires:
  - Least Hardware
  - Most knowledge of set operation
  - Direct connections to receiver
  - TBD software >> TBD Software for multichannel

It is questioned whether the hardware savings are not exceeded by the software costs for the "simple" test set.

VI. R/PA - ANTENNA INTERCONNECTION CONFIGURATIONS

1.0 Introduction and Summary

The R/PA - Antenna configuration seems to have grown more complex. The decision has apparently been made that GPS is to eventually become the primary navigation system. Based on this decision then, the TACAN system will be removed and more GPS receivers will be loaded onboard. As the TACAN antenna slots become available then more holes exist for GPS antennas. With many antennas available the multistring R/PA configuration can take on many topologies. The final multistring configuration, however, must be consistent with the two R/PA - two antenna configuration that will be used during the first stage of the program.

The first stage configuration consists of two antennas, two preamps and two R/PA's. The interconnection of these items is illustrated in Figure 15 (from D^2). Note that this configuration is implemented with a two way power splitter that drives both R/PAs from the same antenna. Note also that no provision is provided for calibration of the preamps. There are three reasons for this:

- The use of narrow bandwidth antennas indicate that substantial L_1-L_2 delays will be contributed by the antenna. These delays will not be calibrated in a preamp calibration.

- Extra cables have to be run in order to calibrate the preamp. These cables are heavy.
- Since two R/PA's are using the same antenna/preamp combination the possibility exists for severe interference between the two R/PA's while one, the other or both R/PA's are calibrating.

The multistring phase of the program involves the use of many R/PA's and antenna/preamp combinations. Due to link margin considerations options which involve switching antennas from preamp to preamp (in an effort to save preamp hardware) were discarded. The additional switch loss ahead of the preamp was prohibitive. The final two choices for the multistring antenna - R/PA configuration consist of a dedicated antenna scheme where one top and one bottom antenna are dedicated to one particular R/PA and a shared antenna scheme where every antenna is connected to each R/PA. These two options are illustrated in Figures 16 and 17 (from Rockwell SDR).

The key features of the dedicated system are:

- Advantages
  - Isolation of strings
  - Minimal cable weight
  - Simplified software
- Disadvantages
  - Antennas are offset
  - Visibility of each R/PA different
  - Requires software tweak of visibility coverage for each R/PA

In contrast, the key features of the shared scheme are:

- Advantages
  - Improved coverage (visibility)

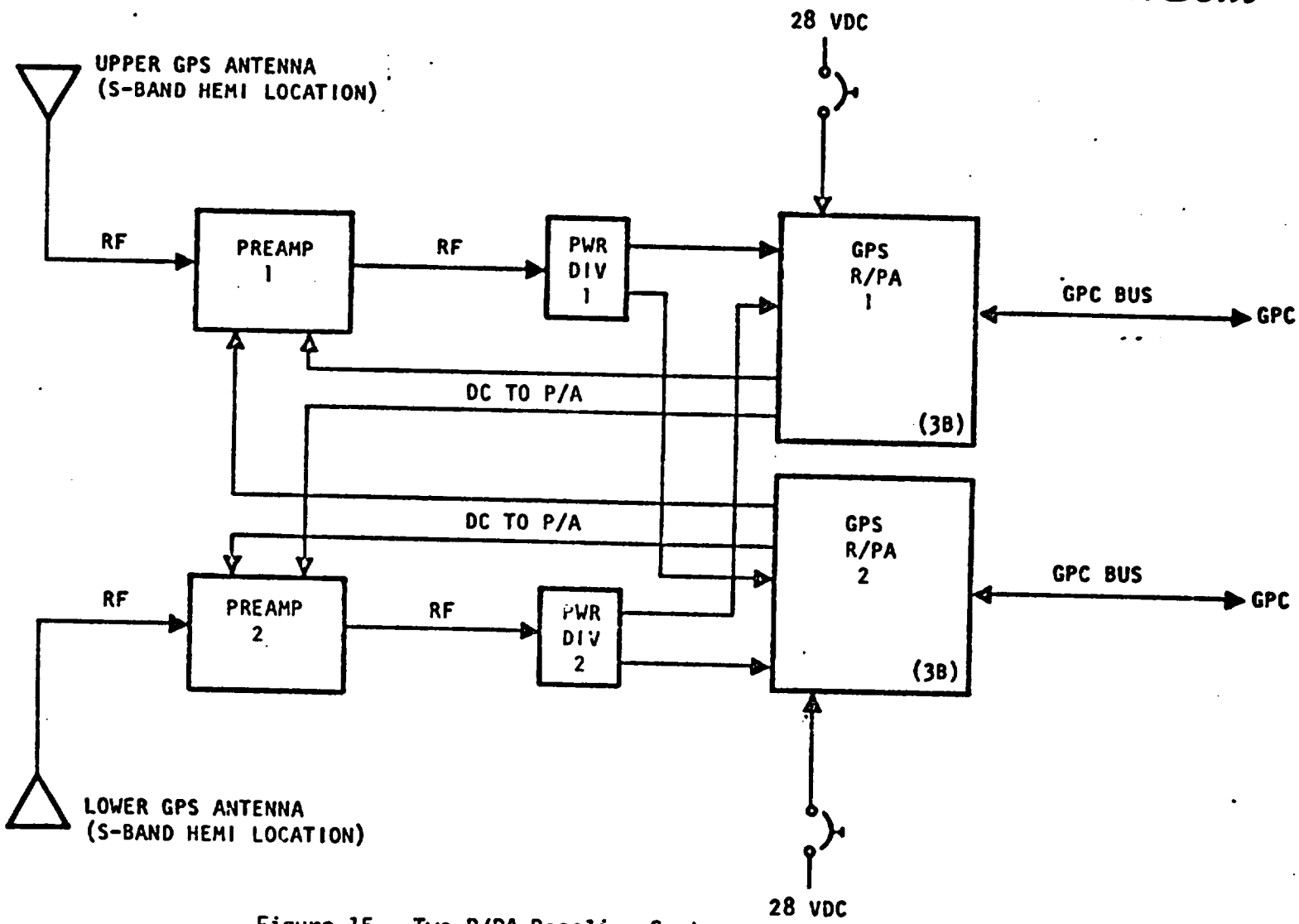

Figure 15. Two R/PA Baseline System.

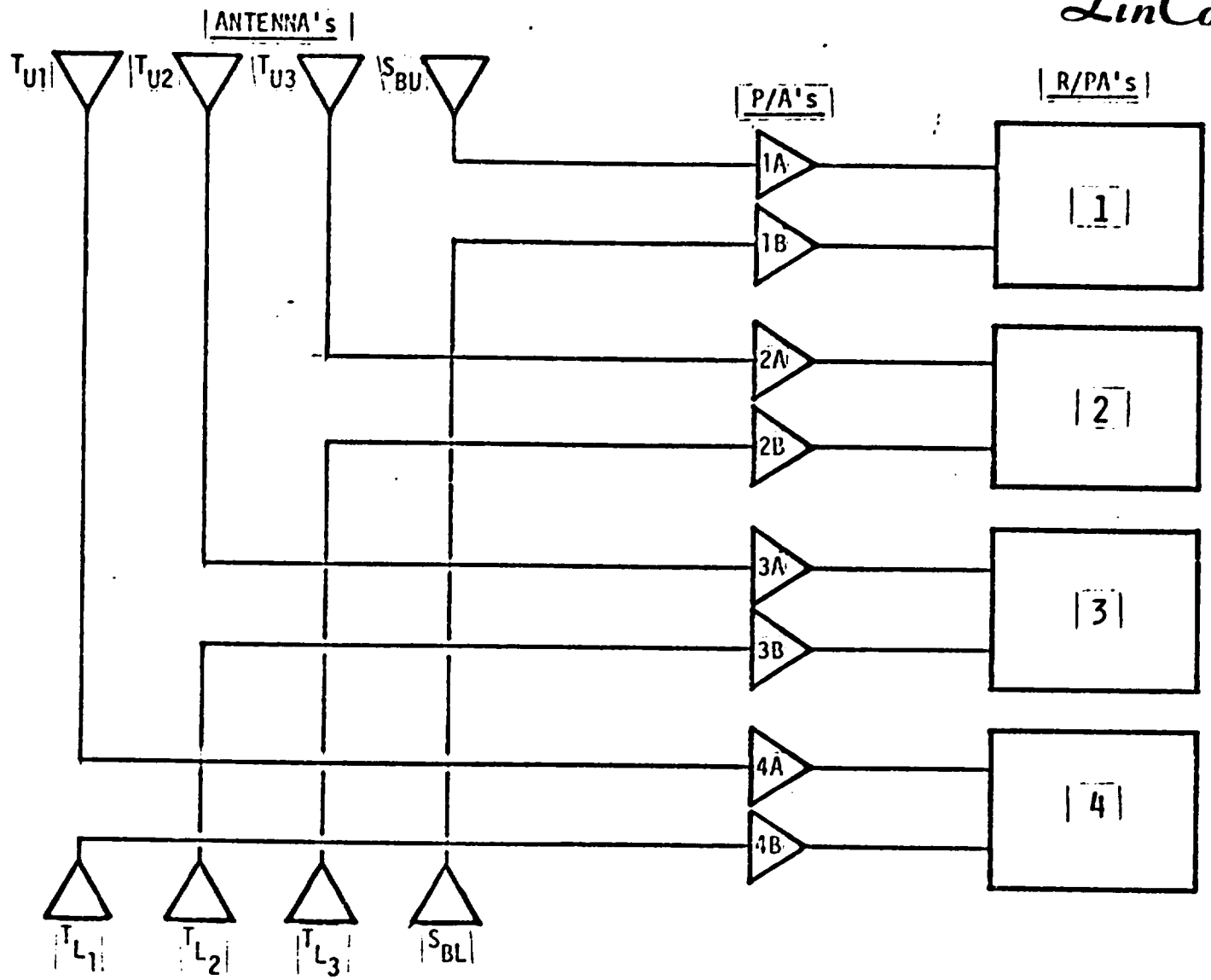

Figure 16. Dedicated Antenna R/PA's.

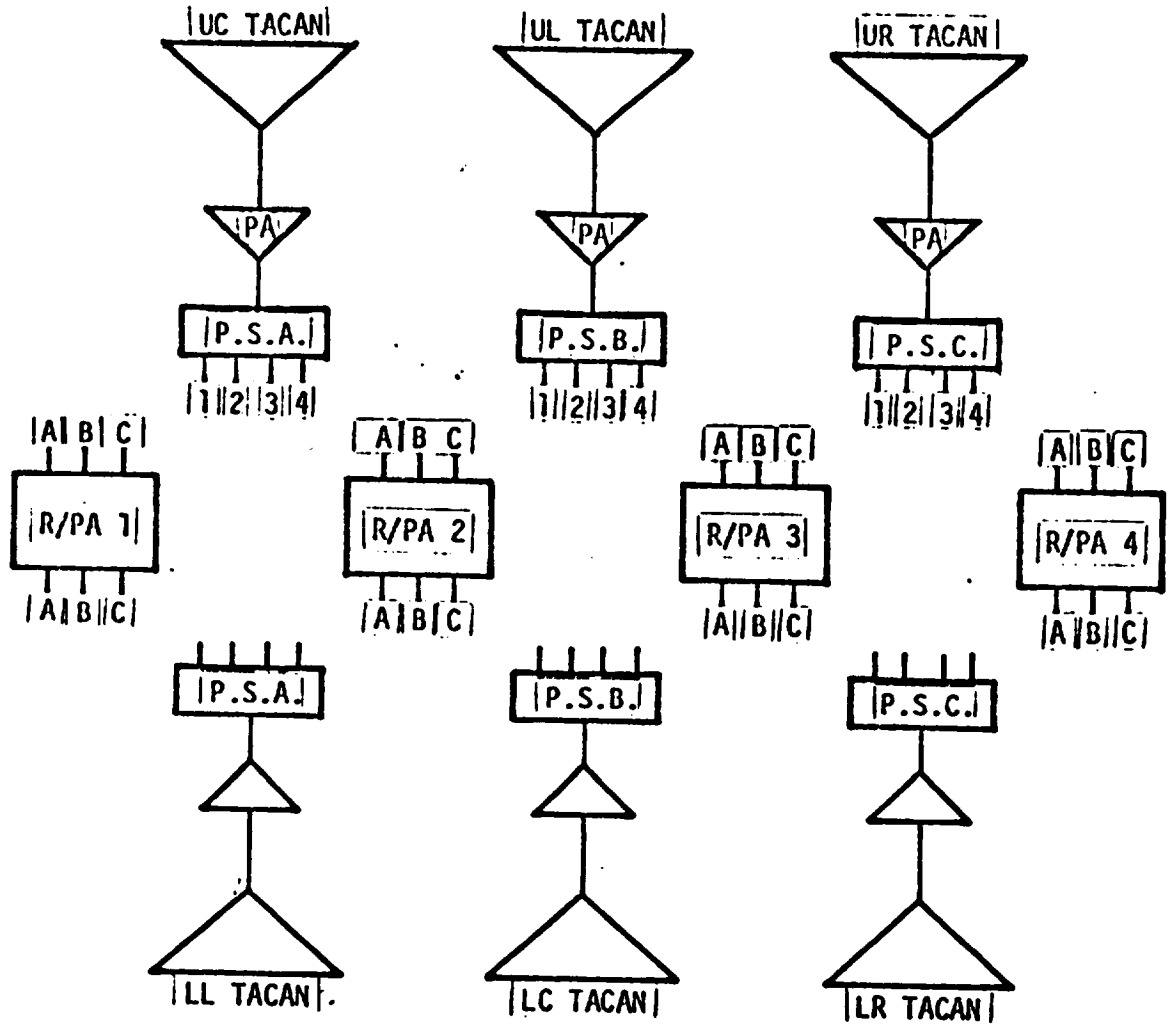

Figure 17. Shared Antenna R/PA's.

- Redundant antenna/preamp for each R/PA
- Exact same software for each R/PA

- Disadvantages
  - Higher cable weight
  - More complicated software
    - Antenna management
    - Antenna/preamp fault isolation.

The dedicated system is probably simpler.

VII. AVERAGING INTERVAL FOR DELTA RANGE (DOPPLER) MEASUREMENT

1.0 Introduction

The receiver performs two measurements that are used by the navigation filter. These two measurements are the pseudorange and range rate or velocity measurements. The velocity measurements are performed by measuring the average doppler shift over a particular interval T. The key parameter in this case is the parameter T. This section discusses the effect of choosing the interval T by illustrating two diverse cases, the Magnavox GPSPAC and the TI MBRS which average for 1 second and .06 second respectively.

2.0 Analysis

The average velocity on an interval T is just

$$v = \frac{1}{T}\int_0^T v(t)dt \qquad (1)$$

This is just

$$v = \frac{1}{T}(R(T)-R(0)) \qquad (2)$$

where R(t) is the range of time t. The quantity R(T)-R(0) is usually designated the delta range thus equation (2) relates the two quantities

delta range and average velocity. The instantaneous velocity may be readily extracted from the receiver. The instantaneous velocity is available in the form of the instantaneous Doppler shift which is extracted from the carrier tracking (Costas) loop. The velocity is related to the frequency shift f from a nominal center frequency of f_0 by $v \cdot f_0/c$ where c is the speed of light. The Doppler offset can then be measured over an interval of T seconds, either by measuring the frequency directly or by an indirect method of measuring the period. By measuring the average Doppler shift for this period of T seconds the average velocity can be directly computed by scaling the result. A typical Doppler measurement configuration is contained in Figure 18.

As expected the result of the Doppler measurement is not perfect. Since the measurement relies on the VCO output, the measurement is corrupted by the fluctuations in the VCO phase. For this reason it is desired to make the averaging interval (T) as long as possible in order to smooth out the phase fluctuations. Unfortunately the larger the measurement interval is the more pronounced the effects of acceleration and jerk become. These terms have a tendency to distort the measurement in the sense that the average velocity is just that; the average cannot be really related to any particular velocity during the measurement period. For this reason it is desired that the measurement interval (T) be as short as possible. This presents the loop and Doppler measurement designer with the classic tradeoff of dynamics induced errors vs random fluctuations. The bandwidth of the measurement system needs to be as wide as possible to accomodate the former and as narrow as possible to smooth out the latter.

The GPSPAC employs a second order loop which tracks signals with a Doppler rate at a constant frequency offset. For a loop noise bandwidth of 35 Hz and an acceleration of 16 m/sec^2 the offset between the VCO and the signal is only the equivalent of .05 m/sec so it tracks fairly well. On the other hand, the acceleration induces a bias in the measurement. If the velocity at the beginning of the measurement interval is the parameter of interest then the measured velocity over the interval will differ from the initial velocity by $\frac{1}{2}$ aT where a is the acceleration. For the previously mentioned 1.6 g's this corresponds to an error of 8 m/sec for the GPSPAC which uses a one second averaging interval.

The MBRS receiver uses a fourth order loop which tracks out the acceleration. Thus the deviation of the measured velocity from the velocity at the slant of the measurement is also $\frac{1}{2}$ aT. For the MBRS this corresponds to .48 m/sec based on a measurement interval of .06 seconds. It is readily apparent that the shorter measurement interval is much less sensitive to the dynamically induced errors.

The other corrupting influence on the Doppler or velocity measurement is the phase noise on the VCO oscillator. This phase noise consists of two terms, the thermal noise and the residual oscillator phase noise. The spectrum of the thermal component extends from zero frequency out to the loop bandwidth and the spectrum of the residual oscillator phase noise extends from the loop bandwidth cutoff out to the IF cutoff frequency. This is illustrated in Figure 19. The effect of the phase noise can be readily estimated. The spectrum of the frequency averaging filter is $\omega^2 \left(\frac{\sin \omega T/2}{\omega T/2}\right)^2$. The spectrum of the fluctuating term at the output of the frequency averaging filter is just the product of the filter spectrum above and the phase noise

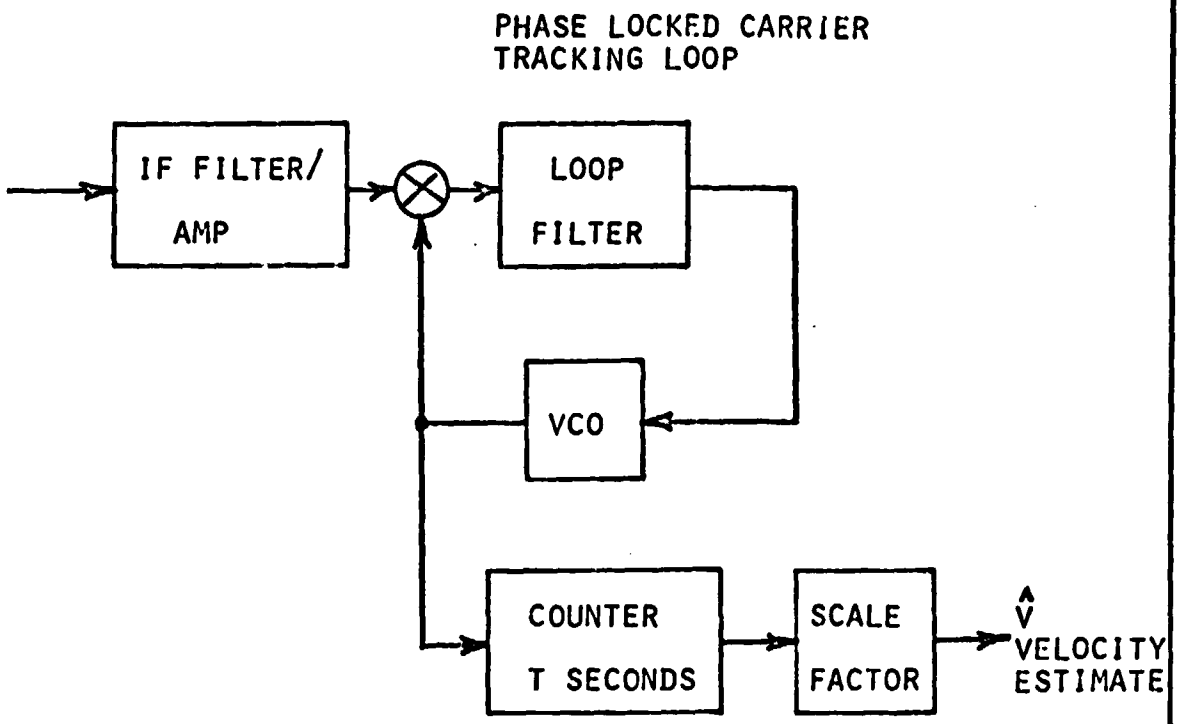
PHASE LOCKED CARRIER
TRACKING LOOP
IF FILTER/
AMP
LOOP
FILTER
VCO
COUNTER
T SECONDS
SCALE
FACTOR
$\hat{V}$
VELOCITY
ESTIMATE

Figure 18.

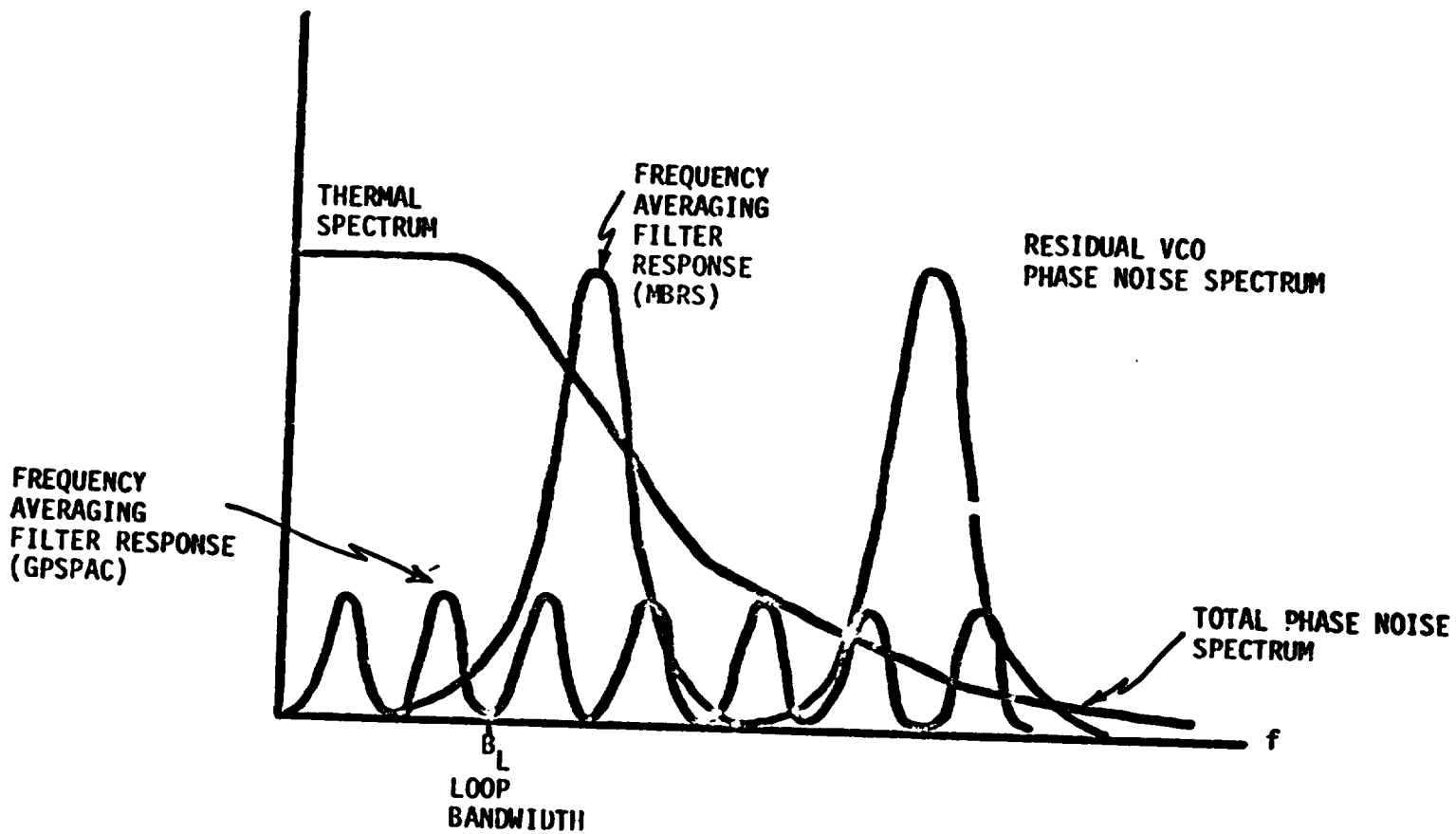

Figure 19 . Spectrum of Random Components at Frequency Averaging Filter Output (Not to Scale).

spectrum. This is also illustrated in Figure 19. The variance of the resulting measurement error can be evaluated by integrating this spectrum. The rms error in the velocity measurements due to the VCO phase noise is approximately .015 m/sec for the GPSPAC and .25 m/sec for the MBRS. As has been previously indicated the longer averaging time results in a lower rms error due to the VCO fluctuations. The performance estimates were based on a crystal oscillator spectrum similar to the MTU oscillator.

VIII. INTERFEROMETRY TECHNIQUES FOR ORBITER ATTITUDE MEASUREMENT

1.0 Introduction

It has been proposed to use interferometry techniques for the estimation of orbiter attitude on orbit. This method requires two GPS receiving systems with the antennas separated by a significant distance. This distance is the key parameter since the larger the distance the more difficult the measurement becomes. The following analysis indicates that the separation distance is approximately 340 m.

2.0 Analysis

Consider the system schematically represented in Figure 20. The receivers are represented by their carrier tracking loops which are the receiver components of interest to the problem at hand. Consider now the output of the system in response to a GPS signal incident from a direction θ relative to the antenna axis. The output of PLL_1 is

$$r_1(t) = \cos(\omega_1(t-\tau)+\phi_1)$$

and the output of PLL_2 is

$$r_2(t) = \cos(\omega_1 t+\phi_2)$$

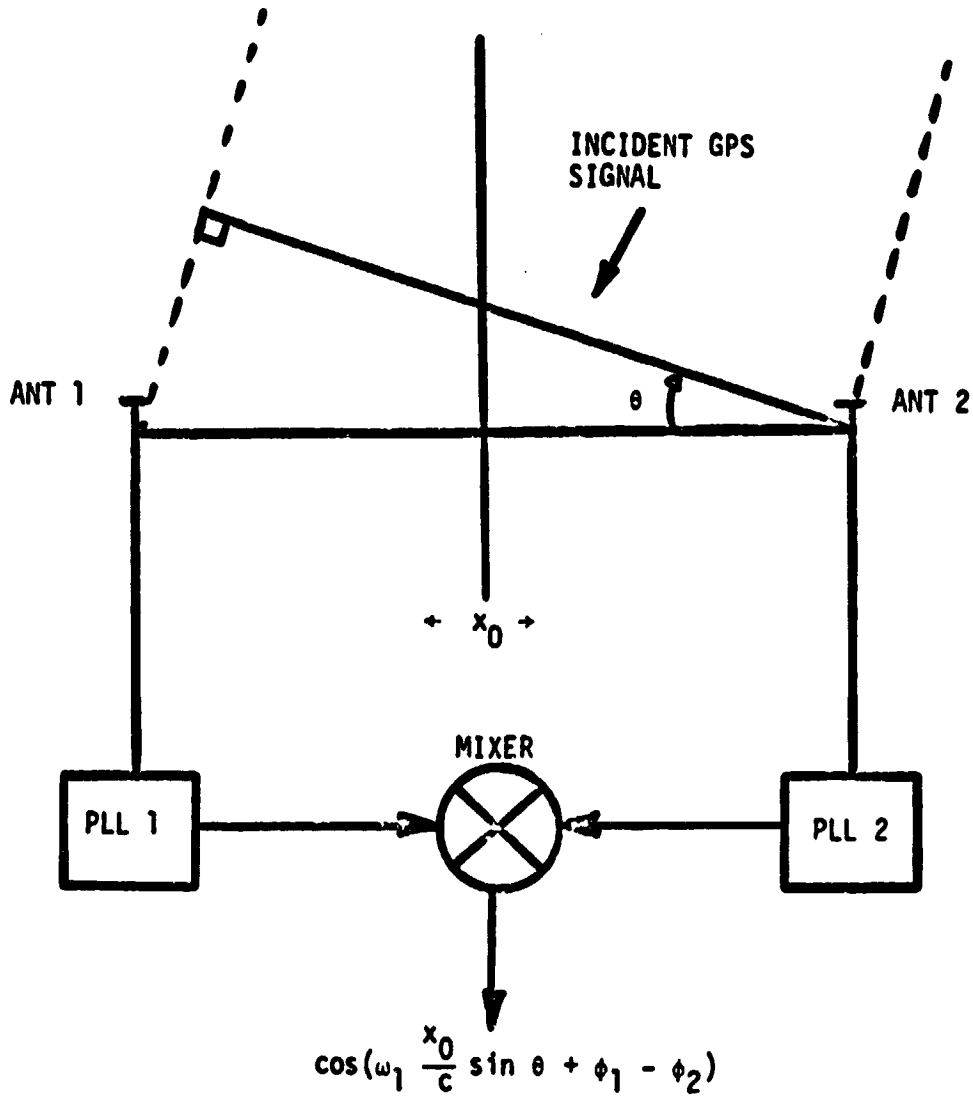

Figure 20. Interferometry Measurement Technique.

The center frequency of the received signal is ω_1 and the random phase fluctuations on the two VCO outputs are ϕ_1 and ϕ_2 respectively. The delay τ is just the difference in time required for the signal to propagate to reach the second antenna. This time difference can be related to the argle θ.

$$\tau = \frac{i}{c} = \frac{x_0}{c} \sin \theta$$

where x_0 is the antenna separation. The baseband output of the mixer is

$$\cos(\omega_1 \tau + \phi_1 - \phi_2) = \cos(\omega_1 \frac{x_0}{c} \sin \theta + \phi_1 - \phi_2)$$

Define $\phi \triangleq \phi_1 - \phi_2$. Since ϕ_1 and ϕ_2 are statistically independent then the rms jitter of ϕ is just

$$\sigma_\phi = \sqrt{2}\, \sigma_{\phi_1} .$$

For a GPSPAC bandwidth of 35 Hz and a minimum received signal of 31.6 dB and assuming a 2 dB implementation loss, the loop SNR is 14.2 dB which corresponds to $\sigma_{\phi_1} = 11.2°$. Thus

$$\sigma_\phi = 15.8°$$

The random component ϕ complicates the measurement. Assuming that one sigma random fluctuations are just barely discernable then the value of x_0 needed to distinguish 10 seconds of arc may be computed. Assume that it is desired to distinguish between $\theta = 0°$ and $\theta = 10$ seconds of arc. Thus

$$\cos(+15.8°) = \cos(\frac{\omega_1}{c} x_0 \sin(10 \text{ sec}) - 15.8°) .$$

This requires

$$\frac{\omega_1}{c} x_0 \sin(10 \text{ sec}) = 2 \times 15.8° \times \frac{\pi}{180}$$

or

$$x_0 = 340 \text{ meters}$$