N O T I C E

THIS DOCUMENT HAS BEEN REPRODUCED FROM MICROFICHE. ALTHOUGH IT IS RECOGNIZED THAT CERTAIN PORTIONS ARE ILLEGIBLE, IT IS BEING RELEASED IN THE INTEREST OF MAKING AVAILABLE AS MUCH INFORMATION AS POSSIBLE

JPL PUBLICATION 79-111

A Proposed Concept for a Crustal Dynamics Information Management Network

Guy M. Lohman
J. Thomas Renfrow

(NASA-CR-162785) A PROPOSED CONCEPT FOR A CRUSTAL DYNAMICS INFORMATION MANAGEMENT NETWORK (Jet Propulsion Lab.) 116 p HC A06/MF A01 CSCL 08E
N80-17618
Unclas
G3/46 47255

January 15, 1980

National Aeronautics and
Space Administration

Jet Propulsion Laboratory
California Institute of Technology
Pasadena, California

MAR 1980
RECEIVED
NASA STI FACILITY
ACCESS DEPT.

JPL PUBLICATION 79-111

A Proposed Concept for a Crustal Dynamics Information Management Network

Guy M. Lohman
J. Thomas Renfrow

January 15, 1980

National Aeronautics and
Space Administration

Jet Propulsion Laboratory
California Institute of Technology
Pasadena, California

The research described in this publication was carried out by the Jet Propulsion Laboratory, California Institute of Technology, under NASA Contract No. NAS7-100.

ABSTRACT

The objective of this report is to summarize the findings of a requirements and feasibility analysis of the present and potential producers, users, and repositories of space-derived geodetic information. It also presents a proposed concept for a Crustal Dynamics Information Management Network (CDIMN) that would apply state-of-the-art concepts of information management technology to meet the expanding needs of the producers, users, and archivists of this geodetic information.

A PROPOSED CONCEPT FOR A CRUSTAL DYNAMICS INFORMATION MANAGEMENT NETWORK

CONTENTS:

ABSTRACT.....iii
PREFACE..... viii
CONTRIBUTORS.....x

SECTION		PAGE
0	EXECUTIVE SUMMARY	0-1
1	INTRODUCTION	1-1
1.1	Objectives	1-1
1.2	Background and Statement of the Problem	1-1
1.3	Approach	1-4
1.4	Related Studies	1-5
2	APPLICATION AREAS--A SAMPLE	2-1
2.1	Tectonophysics and Seismic Research	2-1
2.2	Location	2-3
2.3	Earth Dynamics: UT1, Polar Motion and Time Synchronization	2-6
2.4	Satellite and Spacecraft Tracking	2-7
3	CLASSES OF USERS	3-1
3.1	Major Governmental Agencies	3-1
3.2	University Researchers	3-6
3.3	Industrial Users	3-7
3.4	International Users	3-7
3.5	General Public	3-8
4	INFORMATION SYSTEM ISSUES	4-1
4.1	System Characteristics Issues	4-1
4.2	Data Characteristics Issues	4-4
4.3	Intercommunication of Databases	4-10
4.4	Summary	4-15
5	USER REQUIREMENTS	5-1
5.1	A State-of-the-art System	5-1
5.2	A Case Study -- The Coordinated Data Analysis Workshop	5-3
5.3	A Practical Set of Immediate User Requirements	5-7
6	THE PROPOSED CONCEPT	6-1
6.1	Network Concept	6-1
6.2	Specific Recommendations by Agency/Institution	6-2
6.3	Phased Implementation Schedule	6-7
7	BIBLIOGRAPHY	7-1

APPENDICES

A	DATA PRODUCERS	A-1
A.1	Interferometry	A-1
A.2	Laser Ranging	A-2
A.3	Transit Satellite Doppler Observations	A-3

PRECEDING PAGE BLANK NOT FILMED

APPENDICES PAGE

A.4 Data Types Resulting from Ground Measurements.....A-4
A.5 A Classification of Data Types.....A-5
B MAJOR EXISTING AUTOMATED GEOPHYSICAL DATA COLLECTION EFFORTS.....B-1
C PRESENT GEOPHYSICAL DATA MANAGEMENT SYSTEMS.....C-1
C.1 Goddard Space Flight Center VLBI System (Office of Space and Terrestrial Applications, NASA).....C-1
C.2 National Geodetic Database (National Geodetic Survey, NOAA).....C-5
C.3 National Space Sciences Data Center (Office of Space Sciences, NASA).....C-9
C.4 National Geophysical and Solar-Terrestrial Data Center (EDIS, NOAA).....C-10
C.5 CEDAR, CROSS, and EDIN (California Institute of Technology).....C-10
C.6 GEOLAB (USGS, Menlo Park).....C-15
C.7 Jet Propulsion Laboratory VLBI Systems.....C-17
C.8 National Earthquake Information Service (USGS, Denver).....C-18
C.9 Laser Ranging Data Exchange.....C-19
D GLOSSARY OF ACRONYMS.....D-1

Figures

5-1. Size and Usage of CDAW Database.....5-5
6-1. Overall Layout of the CDIMN.....6-1
C-1. Goddard Space Flight Center VLBI Database File Structure.....C-3
C-2. Goddard Space Flight Center VLBI Data Management Routines.....C-4

Tables

A-1. Existing Low Data Rate Instrumentation (Continuous)in Southern California [Whitcomb 78].....A-4
C-1. National Geodetic Survey Database Data Groups (Partial List)[Alger 79].....C-7
C-2. Current NSSDC Laser Data Holdings, by Source, by Satellite (with Time Spans of Data) [Vette 79a].....C-10

PREFACE

This document represents the final results of a study performed by the Jet Propulsion Laboratory, California Institute of Technology, for the Geodynamics Program of the Office of Space and Terrestrial Applications (OSTA), National Aeronautics and Space Administration. Additional funding from the Applications Data Service (ADS) Project of the OSTA is also acknowledged. The authors wish to thank the contributors listed on page ix for their valuable assistance in providing information used in this study.

CONTRIBUTORS

Name	Affiliation
Robert S. Agatson	Atlantic Richfield Co. (Dallas, TX)
Keiiti Aki	Massachusetts Institute of Technology (Cambridge, MA)
David Alger	National Geodetic Survey (Rockville, MD)
Clarence R. Allen	California Institute of Technology (Pasadena, CA)
Richard J. Anderle	Naval Service Weapons Center, Department of the Navy (Dahlgren, VA)
Don L. Anderson	California Institute of Technology (Pasadena, CA)
Edward P. Arnold	National Earthquake Information Service, USGS (Denver, CO)
Peter L. Bender	Joint Institute for Laboratory Astrophysics, NBS & U. of Colorado (Boulder, CO)
Jon Berger	University of California (San Diego, CA)
John Bossler	National Geodetic Survey (Rockville, MD)
Duane C. Brown	Geodetic Services, Inc. (Indiatlantic, FL)
Dennis Carroll	National Geodetic Survey (Rockville, MD)
William G. Carter	National Geodetic Survey (Rockville, MD)
B. R. Clarke	Leighton & Associates (Irvine, CA)
Robert J. Coates	Goddard Space Flight Center, NASA (Greenbelt, MD)
Oscar Colombo	Department of Geodetic Sciences, Ohio State University (Columbus, OH)
Charles C. Counselman III	Massachusetts Institute of Technology (Cambridge, MA)

PRECEDING PAGE BLANK NOT FILMED

CONTRIBUTORS

James F. Davis	Div. of Mines & Geology, State of Calif. (Sacramento, CA)
Daniel DeBra	Stanford University (Stanford, CA)
Bruce Douglas	National Geodetic Survey (Rockville, MD)
Donald Eckhart	Air Force Geophysical Lab (Bedford, MA)
E. R. Engdahl	U.S. Geological Survey (Golden, CO)
John Fanselow	Jet Propulsion Laboratory (Pasadena, CA)
John D. Fett	Earth Science & Engineering, Inc. (Hemet, CA)
Henry F. Fliegel	Jet Propulsion Laboratory (Pasadena, CA)
Edward A. Flinn	NASA Headquarters (Washington, DC)
Anthony F. Gangi	College of Geosciences, Texas A&M Univ. (College Station, TX)
Edward M. Gaposchkin	Smithsonian Astrophysical Observatory (Cambridge, MA)
William Gates	Dames & Moore, Inc. (Los Angeles, CA)
John C. Harrison	Cooperative Institute for Research in Environmental Science, University of Colorado & NOAA (Boulder, CO)
Pembroke J. Hart	Geophysics Research Board, National Academy of Sciences (Washington, DC)
D. A. Heape	Southern California Edison Company (Los Angeles, CA)
Thomas L. Henyey	University of Southern California (Los Angeles, CA)
James Herriot	U.S. Geological Survey (Menlo Park, CA)
H. L. Holland	Dept. of Water and Power, City of L.A. (Los Angeles, CA)

CONTRIBUTORS

David J. Jackson	Univ. of California (Los Angeles, CA)
Roy L. Jenne	National Center for Atmospheric Research (Boulder, CO)
Malcolm Johnston	U.S. Geological Survey (Menlo Park, CA)
George E. Jones	Chevron, U.S.A. Inc. (New Orleans, LA)
Hiroo Kanamori	California Institute of Technology (Pasadena, CA)
Carl Kisslinger	Cooperative Institute for Research in Environmental Science University of Colorado & NOAA (Boulder, CO)
James L. Lander	Environmental Data and Information Service, NOAA (Boulder, CO)
Judah Levine	Joint Institute for Laboratory Astrophysics, NBS & Univ. of Colorado (Boulder, CO)
Ben E. Lofgren	Woodward Clyde Consultants (San Francisco, CA)
Michael Loughridge	Environmental Data and Information Service, NOAA (Boulder, CO)
Chopo Ma	Goddard Space Flight Center, NASA (Greenbelt, MD)
John McNorgan	Southern California Gas Co. (Los Angeles, CA)
Herbert Meyers	Environmental Data and Information Service, NOAA (Boulder, CO)
Robert Nickerson	California Institute of Technology (Pasadena, CA)
Otto W. Nuttli	Dept. of Earth & Atmospheric Sciences, St. Louis University (St. Louis, MO)
Hyman Orlin	National Academy of Sciences (Washington, DC)

CONTRIBUTORS

J. Earle Painter	Goddard Space Flight Center, NASA (Greenbelt, MD)
Alan Porush	C. F. Braun & Co. (Los Angeles, CA)
Ralph Post	Goddard Space Flight Center, NASA (Greenbelt, MD)
William Rinehart	Environmental Data & Information Service, NOAA (Boulder, CO)
Douglas Robertson	National Geodetic Survey (Rockville, MD)
Alan E. E. Rogers	Haystack Observatory, Northeast Radio Observatory Corp. (Westford, MA)
James Ryan	Goddard Space Flight Center, NASA (Greenbelt, MD)
J. C. Savage	Office of Earthquake Studies, U.S. Geological Survey (Menlo Park, CA),
Charles R. Schwartz	National Geodetic Survey (Rockville, MD)
Irwin I. Shapiro	Massachusetts Institute of Technology (Cambridge, MA)
Peter Shelus	University of Texas (Austin, TX)
Kerry Sieh	California Institute of Technology (Pasadena, CA)
Eric C. Silverberg	University of Texas (Austin, TX)
David E. Smith	Goddard Space Flight Center, NASA (Greenbelt, MD)
John R. Smith	Jet Propulsion Laboratory (Pasadena, CA)
Martin Smith	Cooperative Institute for Research in Environmental Science, Univ. of CO & NOAA (Boulder, CO)
Vernon A. Smoots	Dames & Moore, Inc. (Los Angeles, CA)

CONTRIBUTORS

Robert Specht	Atlantic Richfield Co. (Dallas, TX)
Christopher Stephanides	Goddard Space Flight Center, NASA (Greenbelt, MD)
John Thorp	Smithsonian Astrophysical Observatory (Cambridge, MA)
Sven Treitel	AMOCO Production Co. (Tulsa, OK)
Donald L. Turcotte	Cornell University (Ithaca, NY)
Thomas Usselman	Geophysics Research Board, National Academy of Sciences (Washington, DC)
Larry Vadasz	Dept. of Water and Power, City of Los Angeles (Los Angeles, CA)
James I. Vette	Goddard Space Flight Center, NASA (Greenbelt, MD)
James H. Whitcomb	California Institute of Technology (Pasadena, CA)
Charles A. Whitten	National Geodetic Survey (retired) (Silver Springs, MD)
Floyd J. Williams	San Bernardino Valley College (San Bernardino, CA)
James G. Williams	Jet Propulsion Laboratory (Pasadena, CA)
Owen B. Williams	Defense Mapping Agency, U.S. Naval Observatory (Washington, DC)

SECTION 0

EXECUTIVE SUMMARY

The objective of this report is to summarize the findings of a requirements and feasibility analysis of the present and potential producers, users, and repositories of space-derived geodetic information. It also presents a proposed concept for a Crustal Dynamics Information Management Network (CDIMN) that would apply state-of-the-art concepts of information management technology to meet the expanding needs of the producers, users, and archivists of this geodetic information.

The proposed concept was derived from major functional requirements that emerged from the discussion of information system issues with over 75 producers, users, and archivists of geodetic and related geophysical information, and augmented by published reports. The CDIMN should provide:

- A catalog which incorporates pointers to all relevant data bases both satellite and surface-derived, and which is computerized to permit interactive browsing and formulating requests with multiple keys to locate existing geophysical data.
- Readily available documentation in a standardized format.
- Efficient archival storage of raw, as well as processed data.
- Transcription and reformatting capabilities for direct data exchange in a timely manner.
- Standards for ensuring data compatibility and comparability.
- Integration and comparison of various data types derived via different techniques.
- Interactive access to the catalog and batch access to the data.
- System administration by geophysicists, with information specialists in a supporting role.
- Incentives for timely incorporation of data into the system.
- Cross-referencing of datasets with publications that reference that data.
- Flexibility in accepting and manipulating varying data types in different formats, retrieval keys

other than standard spatial and temporal keys, and widely ranging temporal and spatial observational densities.

The proposed concept of the CDIMN would build upon existing National and World Data Centers as well as other geophysical databases. It would form an interdisciplinary base by interconnecting these distributed, disciplinary databases together with an interdisciplinary communications network that would expedite the cataloging and exchange of geophysical information relating to crustal dynamics. A modular, phased implementation would permit an evolutionary growth. Initially, a computerized geophysical data catalog at a central site would be accessed and updated interactively by users at dial-up terminals resident at each participating institution. As the initial CDIMN provided an increased awareness of available geophysical information, the CDIMN would grow to accommodate user demands for more direct telecommunication transmission of datasets that are now transferred via slower media.

Such a network concept would not necessitate the creation of a new "super data center," nor the expenditure of large sums for the centralization of data archiving functions, but rather would capitalize upon existing data bases, processing routines, and the rapidly developing technologies for the interconnection of distributed data bases. Major interest focuses upon connecting the three World Data Centers A for Solid Earth Geophysics in Boulder, CO; for Rockets and Satellites in Greenbelt, MD; and for Rotation of the Earth in Washington, DC.

The concept also outlines the suggested responsibilities for each of the proposed CDIMN participating and using institutions, which include: the ICSU Panel on the World Data Centers; the Geophysics Research Board and Committee on Geodesy of the National Academy of Sciences; the Environmental Data and Information Service and the National Geodetic Survey of NOAA; NASA; the U.S. Naval Observatory, Defense Mapping Agency, Naval Surface Weapons Center, and Naval Research Laboratory of the Department of Defense; the U.S. Geological Survey of the Department of the Interior; the National Science Foundation; the Smithsonian Astrophysical Observatory; the Haystack Observatory; the Massachusetts Institute of Technology; the Jet Propulsion Laboratory and Seismological Laboratory of California Institute of Technology; and various other universities which collect or use geophysical data under government contracts.

Users from similar institutions were found to have common usage characteristics. Governmental agencies have geographically clustered researchers who often are also the producers of the majority of data that they need. Their applications are usually limited by the programs within the agency, which also fund most of the university researchers. University researchers, on the other hand, are widely dispersed and diverse in their requirements. Particularly in applications such as earthquake prediction, they need to integrate geodetic and other geophysical data from many

sources in new and complicated ways, preferably in an interactive mode. Industrial users appear to have quite well defined and narrow requirements for locating base points on the surface of the land and sea. The international community has users in each of the above categories, and may even provide some data, but are more likely to interact with the CDIMN primarily through the occasional exchange of batches of information.

Typical application areas for the CDIMN include:

- Tectonophysics, seismic, and crustal movement research that should contribute to earthquake and volcano prediction;

- Precise location of points and plate boundaries for:

  -- surveying and mapping,
  -- monitoring subsidence and other public hazards,
  -- resource exploration and exploitation, and
  -- navigation;

- Precise determination of polar motion, universal time, and relative clock synchronization;

- Tracking natural and artificial satellites and spacecraft; and

- Providing astrophysical source structure information.

SECTION 1

INTRODUCTION

1.1 OBJECTIVES

This document presents a proposed concept for a Crustal Dynamics Information Management Network (CDIMN) which is designed to meet the need for integration, management, and distribution of information derived from measurements of crustal movement and related geophysical phenomena. It presents preliminary findings of a study funded by the Geodynamics Program Office of NASA's Office of Space Terrestrial Applications (OSTA).

1.2 BACKGROUND AND STATEMENT OF THE PROBLEM

Recent applications of space technology instrumentation such as very long baseline interferometry (VLBI) and laser ranging show excellent potential for measuring the distance between points on the surface of the earth with high levels of precision ($1\sigma \approx$ 3-5 cm.)*. Several of these major new techniques are completing the proof-of-concept phases and entering the data collection phases of development. The research studies performed with the data collected may contribute significantly to our current knowledge of the geophysical processes which give rise to crustal displacements, deformation, tectonic plate movement, and the related seismic events. Possible contributions to tectonophysics research in general are many.

These technologies show promise of major contributions in fields other than large-scale geodesy. Very accurate synchronization of clocks, and measurement of universal time (UT1) and motion of the earth's polar motion on a routine basis using these techniques are currently under development. Spacecraft are already being tracked using laser ranging. The field of astrophysics also benefits directly from location and structure analysis information derived from quasars used as radio sources for VLBI measurements.

Some techniques still in the proof-of-concept phase may prove useful in other applications. Highly mobile laser-ranging or interferometric systems, for example, could lead to inexpensive, accurate geodetic measurements for construction, resource exploration, mapping, and monitoring of the effects of subsidence on public works and population. Transit Doppler observations are currently employed for point positioning to within 1 to 5 meters. Similar advances have also been realized in the development of ground-based instrumentation such as improved geodimeters, gravimeters, and tiltmeters [Levine 79].

---

*See Appendix A for a brief introduction to these technologies.

At the same time, these developments have been paralleled by major advances in information technology over the past few decades. Commercial institutions in the U.S., as well as many governmental agencies (e.g., Department of Defense, NASA), are increasingly dependent on information processing using computers. The use of computers and computer-controlled communications is growing rapidly. For many commercial applications, the cost-effective manual equivalents no longer exist. As the cost of labor skyrockets and the datasets grow while the cost of computer and communication related technology decreases, computerized information exchange, storage, and display increasingly become the only sensible alternative.

For the scientific and technical community, the dependency on computers is even greater. The problem has become the provision of maximal computer-based support, rather than the decision of whether or not to utilize computers. Computers have become as accessible and essential a scientific tool as the slide rule used to be.

The state of the art in communications among computers has reached the point where large networks of computers have become commonplace. Interactive computing with sophisticated, English-like languages makes direct access by scientists easy and productive. Commercially available mass storage systems, with capacities of more than 400 billion characters and random access times of less than one minute, for example, make huge databases readily available for perusal. Hierarchies of storage devices having varying capacities, access speeds, and degrees of reliability permit cost-effective management of this data. With the growing clientele for computer technology, the demand for development of enhanced capabilities for computerized information systems shows every sign of accelerating.

A major problem confronting NASA is that these two technologies have not yet been brought together fully to address the total data collection, data processing, and information exchange needs of NASA-affiliated researchers, the geophysical community, or our society as a whole. Data quantities are likely to increase significantly in the next decade with the advent of mobile instruments. The number of possible, derivable baselines increases approximately as the square of the number of stations occupied.

Relevant geophysical data often exist in machine-readable form, but in differing formats in widely separated systems belonging to governmental agencies and universities throughout the U.S. There currently exists a fragmented network of data exchange that is quite ad hoc and limited. For example:

- Numerous institutions report seismic parameters and some waveforms to the National Earthquake Information Service via various communication networks and via magnetic tape. In turn, this data is summarized and sent to the Environmental Data and Information Service (EDIS) of NOAA at a later time [Arnold 79].

- Goddard Space Flight Center, MIT, and Haystack Observatory regularly exchange VLBI data via phone lines or tape, facilitated by identical computers [Ma 79].

- The USGS is providing its affiliated institutions with common hardware and software, at the rate of about 6 systems per year, which should help to standardize data collection, processing, and exchange among these institutions [Harrison 79].

- There exists an International Gravity Standardization Network (1972), established by the International Association of Geodesy and headquartered at the International Gravity Bureau in Paris [IAG 79], that relates major gravimetric observations throughout the world.

- The Defense Mapping Agency maintains the largest database on gravity within the U.S., and forwards unclassified portions of it to the EDIS [Harrison 79].

- Lunar laser ranging data is collected at the University of Texas at Austin and sent each month in the form of about 50 cards to MIT, the National Space Science Data Center (NSSDC), and to Australia via the GE network [King 79].

- Satellite laser ranging data from the Goddard Space Flight Center network of 10 stations, Smithsonian Astrophysical Observatory network of 4 stations, and cooperating international laser ranging stations is exchanged in batches, on magnetic tape, with NSSDC (see App. C.9).

- Xerox copies of computer outputs transfer limited amounts of NGS data to the USGS in Menlo Park, CA [Savage 79].

This existing data flow does not integrate the various data types, nor is it coordinated by any overall policies concerning format or collection standards. Meaningful interpretation of one type of geophysical measurement is often hindered by the unavailability of related data types. For example: the elastic strain in the earth's crust, which is measurable using geodetic techniques, also has many different geological, geochemical, and geophysical manifestations that are currently being observed independently by researchers in several major institutions. Global satellite-derived gravity and magnetic anomalies may be associated with tectonic plate rifts and sutures [Frey 79]. At the other spatial extreme, local changes in weather can grossly affect measurements by tiltmeters [Kisslinger 79]. Observed gravity anomalies have been found to be correlatable with seismicity and even local rainfall and water levels [Whitcomb 79]. (For a characterization of these other ground-based geophysical data types and current efforts to automatically collect them, see Appendices

A.4 and B.) The contribution to earthquake research activities by space technology geodetic data can sometimes be enhanced by the integration and intercomparison of information from space technology and conventional sensors.

It is this integration of information which offers the research community the most complete perspective on the processes affecting the dynamics of the crust, and which holds the greatest promise for extending our current knowledge on tectonic processes. This conclusion has also been recognized by several other studies [IUGG/IUGS 79, GRB Data Committee 79, Kaula 79, Colombo 79].

1.3 APPROACH

The information contained in this report has come from several sources. Data producers, data archivists, and data users have been interviewed, and have responded to a written inquiry sent to over 50 people. Phone interviews have been conducted to elicit more detailed information. Various relevant reports have been examined. A summary of the findings of this work are presented in this report.

The process of identifying the four groups of people to contact proceeded iteratively. Initially a small group of data producers provided lists of potential data users and also other data producers. In the process of contacting this group, other producers and users were identified and the survey process enlarged. This enlarging operation proceeded until a representative sample of the user and producer community was obtained. The sample included people from the academic community, from governmental agencies, and from the industrial sector.

Sections 2 and 3 discuss the ways in which the information managed by the CDIMN can be utilized, and the requirements of typical users within each major class of potential users. Section 4 identifies and discusses specific issues and problems that any such system must contend with. Resolution of each issue is justified based upon the user requirements identified earlier. Each resolved issue is the equivalent of specifying a major, top-level functional requirement for the CDIMN. This leads naturally to Section 5, which summarizes the user requirements for the CDIMN. Finally, Section 6 presents the proposed concept for a CDIMN that is recommended to satisfy those requirements.

1.4 RELATED STUDIES

The findings of this CDIMN study have relevance to three similar NASA studies of wider scope: (1) the Crustal Dynamics Project, (2) the OSTA-wide Applications Data Service (ADS) Project, and (3) the NASA End-to-End Data System (NEEDS).

The Crustal Dynamics Project is a consolidation of several project-type activities which have been under way in the Resource Observation Division of NASA for several years. As part of NASA's program to apply space technology to crustal dynamics and earthquake

research [Crustal Dynamics Plan 79], the Project has responsibility for the initiation of a global program of crustal deformation measurements. The Project activities include:

- Managing the development and demonstration of laser and VLBI techniques to achieve measurement capabilities and accuracies needed for crustal dynamics studies, including OSTA responsibilities for systems validation and intercomparisons.
- Acquiring and disseminating data.
- Managing Principal Investigator studies.
- Providing for and affecting the transfer of technologies to operational agencies and to scientific groups.

The specific on-going activities that were included in the Crustal Dynamics Project are:

- Laser Earth Dynamics Project (including Lageos investigations).
- San Andreas Fault Experiment.
- Transportable Laser Ranging Stations--TLRS (under development by the University of Texas, Austin).
- Lunar Laser Ranging (McDonald Observatory, Texas, and Haleakala, Hawaii).
- Pacific Plate Motion Experiment.
- Polaris (NGS) Support.
- Aries Project.
- VLBI Systems Development

The Crustal Dynamics Project differs from most OSTA programs primarily in its dependence on ground systems. It contrasts with the ADS and NEEDS projects in that it emphasizes development and demonstration of new measurement capabilities, rather than the medium by which those measurements are disseminated.

Although not directly funded through the Crustal Dynamics Project, the CDIMN study, whose results are summarized in this document, is closely related to the Crustal Dynamics Project. Many of the data producers and users of the proposed CDIMN are currently funded through the Crustal Dynamics Project, and both studies are funded and managed by the Geodynamics Program Office of NASA.

The ADS Project is similar in nature to the CDIMN study, but covers a much broader spectrum of applications disciplines,

ling Geodynamics applications. It is the intent of ADS to integrate, catalog, electronically publish (i.e., notifying potential users of data availability), and in some cases, provide on-line access, to a substantial fraction of the nation's space-related data for researchers in a variety of application disciplines. These disciplines correspond to program areas within OSTA, and include the following:

- Climate
- Weather
- Environmental quality (air and water)
- Ocean processes and marine applications
- Cryosphere
- Coastal zone
- Agriculture
- Land use
- Water resources
- Communications, search and rescue, navigation
- Desertification
- Non-renewable resources
- Geodynamics
- Related space sciences

The ADS feasibility study recognizes the need within these disciplines, including Geodynamics, to provide a means of access to information and to provide more user-oriented products and services (e.g., georeferenced data, data segmentation, and integration services), in order to make cost-effective use of the vast amounts of data and information that are currently produced and archived by on-going and proposed programs. To date, an assessment of existing producers and users of data in all disciplines has been compiled, in order to give a detailed snapshot that can be used to scope the system and communication needs [Painter 79].

The NEEDS project is less closely related to the CDIMN study than are the ADS or Crustal Dynamics Projects. Developing information systems technology--both hardware and software--is the primary objective of NEEDS. As such, its results could facilitate the implementation of the CDIMN by pointing to appropriate information systems technology.

SECTION 2

APPLICATION AREAS--A SAMPLE

The following description of selected current applications for the CDTMN within presently funded projects will serve to illustrate the broad base for future applications. This summary of applications is representative, and certainly is not an exhaustive list. It is important to note that, for any one observation by the new space-derived techniques, information relevant to several of the following applications can be derived simultaneously.

2.1 TECTONOPHYSICS AND SEISMIC RESEARCH

Global, regional, and local data of varying types, including geodetic types, are needed to support on-going basic research in tectonophysics and seismology. Typical applications from recent papers include crustal movement measurement, earthquake prediction, volcano prediction, strain accumulation, crustal thickness measurement, regional crustal tilt and its impact on river gradients [Adams 79], a proposed world-wide vertical geodetic network [Colombo 79], correction of local gravity measurements for rainfall [Whitcomb 79], and correlations of global-scale anomalies of varying data types [Frey 79]. The first three of these applications is discussed in more detail below.

2.1.1 Crustal Movement Measurement

Tracking the movement of the earth's crust, especially the relative motions and deformations of the underlying tectonic plates, is helpful to understanding the basic processes that have shaped and continue to shape our planet. To date, studies of worldwide earthquakes have been the primary method of outlining the boundaries of the plates, determining their relative motion, and identifying the down-going slabs.

Studies have been undertaken by several government agencies to understand crustal movements and to alleviate their hazards through attempts to monitor the motion of the major crustal plates. Guidelines for the questions to be addressed by researchers are already under consideration by the National Academy of Sciences Panel on Crustal Movement Measurement (see Section 3.1). Measurements to be made by the Crustal Dynamics Project of NASA have already been described in Section 1.4 and are detailed in [Coordination Plan 78]. The minimum measurements required to detect movements of the known plates would number only 40 to 50 observations world-wide for at least 5 to 10 years.

2.1.2 Earthquake Prediction

It is hoped that more accurate measurement of crustal movements will contribute to our knowledge of seismic events. It is

now generally accepted that tectonic plate movement is a major underlying cause for most earthquakes. Understanding and eventually predicting the processes that underlie earthquakes will require more careful measurement and cataloging of plate boundaries, directions, and rates of movement.

Measurement of crustal movement is specifically identified as relevant to three of the six subelements in a plan for development of earthquake prediction and hazard mitigation programs proposed by the NSF and USGS (NSF/USGS 76). In the first subelement, that of "fundamental earthquake studies", one activity is determining the implications of plate tectonics for earthquake hazards reduction. In the second subelement of "prediction", which was assigned to the USGS, relevant activities include: purchase and installation of instrumentation for deformation monitoring, seismic monitoring, and monitoring other data types (geochemical, magnetic, electrical, etc.); operation of installed networks of instruments, including routine data processing in selected areas of high or unique seismicity; detailed analysis of field and laboratory data; development of computerized, on-line monitoring of these networks; and the performance of deformation surveys on a large scale. The third relevent subelement was in "hazard assessment", also assigned to the USGS. The major geodetic activity within this subelement was the mapping of hazardous areas, based upon seismic activity and the measurement of crustal movements (NSF/USGS 76). Crustal movement, particularly in conjunction with other geophysical phenomena, is identified throughout the report as a potentially significant long-term precursor to earthquakes in the U.S. research program.

Japan has made geodetic releveling a major activity in its program of earthquake prediction, particularly for identifying "areas of intensive study". This is due to the anomalous crustal uplift noted before several large historic earthquakes in Japan. For example, a two-meter ground uplift of the ocean floor near Hamada, Japan, occured in 1872 before a major earthquake [Rikitake 76].

The ambitious Japanese program plans to relevel every five years approximately 20,000 km of first-order leveling lines that have been established all over Japan, in order to maximize the probability of detecting anamalous crustal movements and to monitor strain buildups. This involves a nationwide network of both vertical and horizontal geodetic monitoring, using geodimeter lines consisting of approximately 6,000 triangles. In conjunction with this geodetic monitoring, observations of crustal movements are being collected using tiltmeters and strainmeters in 17 observatories (as of 1973) throughout Japan [NRC Earthquake Prediction 76]

Furthermore, in instances in which scientists have been able to predict seismic event times to accuracies better than 6 months, (e.g. before the Haicheng earthquake of 1975) it has been where measurements on the order of days or hours have been made

[Bender 79]. Mobile space-derived techniques (see Appendix A.4) may prove to be the best way to achieve these observational densities in a cost-effective manner [Bender 79].

2.1.3 Volcano Prediction

A related application is the eventual prediction of volcano activity and eruption. Studies have revealed a high incidence of volcanic island chains along subducting plate boundaries [Marsh 79]. "The increase or decrease of magma pressure at depth causes deformation of the ground surface above. By determining the deformation field, one can deduce the depth and the approximate shape of the magma reservoir." By integrating these with micro-gravity, water table, magnetic, heat flow, ground temperature, seismic activity, and chemical change measurements, "it should be possible to predict eruptions" [IUGG/IUGS 79].

2.2 LOCATION

Geodetic techniques are intended primarily to locate points on the surface of the earth. Traditionally, geodesy has been almost synonymous with land-based surveying. The new astronomical geodetic techniques will complement conventional ground-based techniques in a number of ways described below.

2.2.1 Surveying and Mapping

Doppler satellite measurements have been used for establishing control points to be used in conjunction with land based geodetic techniques for mapping or as the basis of further geodetic surveys since 1972, after the evaluation of the Department of Defense Geoceiver test. As laser ranging and VLBI techniques achieve greater portability and become cost competitive, their use in geodetic surveys will also increase. These techniques can be used to establish control points which can be densified by land based methods. The amount of data needed to establish control points for a given region can be inferred from the several examples which follow:

- In Antarctica, 31 Doppler stations were set up at 28 remotely scattered locations over an area of approximately 870,000 km^2 during the austral summer of 1975 and 1976. Additional surveys have been conducted, and an effort is tentatively planned for 1980 which will tie all the independent traverses established by USGS between 1957 and 1970 to a common datum [MacDonald 76].

- The Geodetic Survey of Canada, during the period from 1974 to 1976, established 150 control points over Canada with an average separation of 300 km. All were done using Doppler satellite signals. Eventually, 200 points at a spacing of 200 km to 500 km will be established [Boal 76].

o Doppler satellite systems have been found to be ideal for the coordination of sites on islands where intervisibility is impossible. In Papua, New Guinea, about 80 island stations were occupied in 1975 in the Bismark and Louisade archipelagos, to provide mapping control and to assist in determination of inter-island distances to establish sovereignty [McLuskey 76].

o During the period 1975-1976, the Australian Geodetic Survey used Doppler satellite observations at 96 major junction points of a 1966 readjustment survey. The objective was to test the accuracy of the survey and to provide a ready means for the conversion of subsequent Doppler satellite observations into Australian Geodetic Survey coordinates [Luck 76].

o Doppler satellite observations can be used to map a region with rough or inaccessible terrain by coordinating aerial photographs of the area with the Doppler sites. This combination of techniques is frequently used in mapping developing countries.

2.2.2 Monitoring Subsidence and Public Hazards

Geodetic measurements and re-surveying are frequently part of environmental monitoring activities which are conducted to ensure compliance with law. Movements of dams must be accurately recorded to assess the potential for dam failure. In open pit mining, measurements are taken to measure slope stability. Around the Gulf Coast ground water has been removed, and in California and Texas large amounts of oil have been removed from the oil fields. Surveys are required to determine land subsidence in these areas due in part to these extraction operations. Subsidence can cause serious problems in existing underground utility and sewage systems, and may affect the design of new systems that must be connected to older systems. Subsidence of 3.5 cm/yr. at one point near the Salton Sea, for example, has necessitated the dredging of drainage channels and the pumping up of sewage 12 to 14 feet at some points [Lofgren 79, Twogood 79]. The poor drainage may also contribute to the increasing salinity of the soil in this prime agricultural area. Insurance companies must be concerned with floodplain elevations, for they may change over time as land subsides [NRC Geodesy Report 78].

2.2.3 Resource Exploration and Exploitation

The oil and mineral extraction industries spend considerable resources on several location problems which are likely to be solved by the space-derived geodetic technologies. Doppler receivers are already quite numerous in demonstration projects for these applications.

Off-shore exploration presents a most promising application of these geodetic techniques. For example, the precise location of seismic sounding ships to within 100 foot tolerances is

currently performed by the Atlantic Richfield Company (ARCO) using shore-based radio techniques. ARCO has experimented with using the Navy's Loran-Sea satellite, but that requires triangulation with ground-based stations. Such a ship costs about $500,000 a month to operate, about 10% of which is spent on precise location [Specht 79]. Once oil reserves have been located by this or other similar techniques, drilling platforms must be located with equal accuracy [Agatson 79]. Satellite Doppler equipment and techniques have already been used to determine the final position of several movable drilling platforms for oil and gas exploration off the East Coast of the United States [Stutes 79]. Space-derived geodetic location techniques may provide oil companies with cost-effective measurements of ship or platform locations in real time and at much greater accuracies. In particular, Doppler methods appear to meet their requirements at this time. Their requirements for a highly portable location system would have some impact on the specifications for a CDIMN by remotely adding and comparing points corresponding to permanent off-shore platforms. In conjunction with other nearby points, periodic re-observation of these points would enable the drilling companies to monitor intra-plate movements that could jeopardize operations.

Research has determined that economically attractive concentrations of mineral deposits frequently occur at spreading boundaries of tectonic plates (see, for example, [Bonatti 78]). Significant deposits of iron, manganese, barium, copper, and uranium have already been found in these areas. The potential interest by mineral extraction companies in the precise location of tectonic plate boundaries where spreading occurs is obvious.

The movement of major ice flows poses a hazard to both oil drilling platforms and navigation. At least one oil company has experimented with using Doppler ranging techniques for monitoring the movement of ice [Hittel 79].

In non-marine applications, resource exploration companies are large consumers of NGS control points. For example, ARCO requires approximately 200 to 300 NGS control points per year as base points for gravity and magnetic measurements used to locate new petroleum deposits. Gravity measurements are typically taken at one-half mile intervals in selected regions. The position of each measurement must be determined geodetically to within 25-30 feet horizontally, and one foot vertically [Specht 79]. Again, applicability of an inexpensive, astronomically-derived geodetic technique is apparent. If greater densities could be generated economically, it is likely that even more users would find the additional data very useful.

2.2.4 Other Location Applications

The Department of Defense has such extensive requirements for locating forces in the field that it has initiated the NAVSTAR

Global Positioning System (GPS). This system of 24 satellites, which will transmit encoded positioning data to special receivers carried by ground units, will be a primary all-weather source of positioning information for U.S. defense forces worldwide. Use of the GPS signals for geodetic applications (without compromising the DOD encryption) is described in Appendix A.4. It is easy to imagine other applications once receivers become inexpensive enough. For example, insurance companies may well require such locating receivers aboard any ship or aircraft as a condition of insurability [Bender 79].

2.3 EARTH DYNAMICS: UT1, POLAR MOTION, AND TIME SYNCHRONIZATION

The new astronomically derived geodetic measurements determine the position of receiving stations relative to each other in a geocentric coordinating system. This in turn provides very accurate measurements of the movements of the earth, yielding precise figures for universal time (UT1), polar motion, and errors between clocks at the receiving stations. These applications are expected to be the first to achieve operational status and possibly to require near-real-time data transmission via the CDIMN.

The movement of the earth's pole is a complex motion having components of varying frequency. It includes both an annual term and the Chandler wobble (with a period of about 428 days). The latter results in irregularities in the location of the rotational pole having amplitudes of several meters [Crustal Dynamics Plan 78]. These variations also affect the accurate measurement of universal time. The Bureau International de l'Heure (BIH), in Paris, France, currently coordinates optical time and polar motion observatories and satellite Doppler observations from about 50 stations, having accuracies of about 1 meter (with 5-day averaging) [Robertson 79, Intl. Lat. Obs. 78]. These measurements are distributed in the U.S. by the U.S. Naval Observatory (see also Section 3.1) [Robertson 79]. Laser ranging (both satellite and lunar laser ranging) and interferometry are now available to provide more accurate measurements.

One example of such an application of interferometry is the POLARIS Project. The NGS (in conjunction with NASA) has instigated the POLARIS (POLar-motion Analysis by Radio Interferometric Surveying) Project to obtain accurate ($\pm$10 cm) measurement of polar motion and UT1 ($\pm$0.1 msec) using three permanent VLBI stations. The POLARIS project will utilize the VLBI database management system developed by Goddard Space Flight Center (see Appendix C.1) to collect and process data to the (X,Y,Z)-coordinate stage [Carter 78, Coordination Plan 78]. It is currently anticipated that the results will be distributed using the current methods of the U.S. Naval Observatory [Robertson 79]. However, the exchange, intercomparison, and distribution of this data collected at various sources would be a natural near-real-time function of the CDIMN.

Another example is the Block 1 system that will soon provide near-real-time support for the operations of NASA's Deep Space Network (DSN), but not to the accuracies of the POLARIS Project (see Appendix C.7).

2.4 SATELLITE AND SPACECRAFT TRACKING

The position of a signal source is one of the parameters that may be determined by inverting the positional information derived from a signal that is received by laser ranging or interferometric technologies. Laser ranging provides accurate tracking of earth-orbiting satellites by successively bouncing the laser pulse off the satellite and receiving the reflected pulse. These measurements provide very accurate ephemerides of both artificial satellites in earth orbit and of the Earth's moon [Williams 78]. Interferometric techniques can similarly derive the position of either earth-orbiting satellites or interplanetary spacecraft through inversion of the signals received. For example, the Galileo mission to Jupiter will utilize VLBI techniques for spacecraft tracking.

2.5 ASTROPHYSICS

The application for which VLBI techniques were originally developed is an indirect beneficiary of any VLBI observations of astronomical radio sources made for geodetic purposes.

Details of the source's structure can be inferred from analysis of the VLBI outputs. Provision for processing an output to astrophysicists of this information for source structure analysis has been designed into the VLBI database system at Goddard (see Appendix C.1). Already VLBI observations have established the location of 20 to 25 astronomical sources, mostly quasars, to within .01 arc-second, and eventually will be capable of obtaining accuracies of the order of .001 arc-second [Fanselow 78]. Maintaining, updating, and expanding this catalog of astronomical source locations is of obvious interest to astronomers.

SECTION 3

CLASSES OF USERS

The requirements of potential users of a CDIMN depend largely upon the institution which employs them and which supports them financially. Each institution has its own programmatic thrusts, which influence the scope and objectives of its resident personnel. Therefore, users can be roughly classified and characterized by their parent and funding organization(s).

3.1 MAJOR GOVERNMENTAL AGENCIES

The use of space-derived geodetic data has application to work done by many areas of government. There are several agencies which have already given much study to the use of this source of geodetic data in carrying out their operational missions. It is this group of governmental agencies which are discussed below.

In most cases, the studies described below are really descriptions of governmental programs, which are often carried out by funding the research efforts of university researchers or investigators in government-sponsored research laboratories or centers. This is particularly true for NASA, NSF, and the USGS. Hence there is considerable overlap in the following requirements for government agencies and those for university researchers (Section 3.2).

- National Aeronautics and Space Administration

NASA has essentially three types of interest in space-derived data. The first is a desire to foster the research, development, demonstration, and transfer to non-NASA users of these space-related geodetic techniques. Related to the first is a continuing NASA interest in the study of fundamental global geophysical phenomena. The third is to use advanced VLBI and laser ranging technology operationally for improved tracking of deep space missions [Coordination Plan 78].

In its effort to demonstrate the efficacy of this new technology, NASA has instigated the Crustal Dynamics Project, which includes the development of data producing technologies as well as sponsoring a panoply of experiments in geodynamics (see Section 1.4). They range from studies of global plate movements to measurements of strain accumulation locally along active faults [Crustal Dynamics Plan 79]. A few examples of typical NASA applications follow.

To resolve the rotational motion of the earth's tectonic plates requires, in practice, at least three sites per plate. This means that about 30 sites distributed worldwide will be needed for

a comprehensive monitoring program by NASA [Crustal Dynamics Plan 79]. The information gathered in these experiments could be used to study the nature of episodic motions along plate boundaries and in plate interiors as well. NASA will also be a major user of the data collected by the the POLARIS Project with the NGS (see Section 2.2).

On a regional scale, NASA has proposed the establishment of a network of mobile VLBI and/or laser sites to support current ground-based measurements and to extend the crustal deformation measurements across the Basin and Range Province and into the Pacific Northwest. Site spacing would vary from 500 km in seismically stable areas to 100 km or less near the San Andreas Fault [Crustal Dynamics Plan 79].

Aftershock investigations on a local scale (20 to 100 km) to study earthquake-related ground motions have also been proposed by NASA. After a major earthquake (within 24 hours) sites within a radius of about 100 km of the epicenter would be geodetically monitored at spacings of 10 to 50 km using mobile equipment. The frequency of measurements would be daily or weekly initially, and then at least once per month for several years [Crustal Dynamics Plan 79].

These examples are representative of the applications that NASA and NASA-affiliated investigators plan to pursue. They indicate the primary need for mapping the daily, up to yearly, movement of points and baselines, over a period of several years and on global through local scales, and the need to correlate these movements with related ground-based data types, especially local seismic activity.

o National Geodetic Survey.

The National Geodetic Survey plans to use space-derived geodetic data for high-precision monitoring and maintenance of its geodetic control networks, determination of crustal motion, and determination of polar motion.

The NGS is studying polar motion through project POLARIS. Three sites are planned for use in this project. They are located at Westford, Mass., Ft. Davis, Texas, and Richmond, Florida. The facilities at these three sites will also serve as base stations for monitoring crustal motion using portable and mobile VLBI equipment [Coordination Plan 78].

In late 1980, NGS will work with NASA in establishing a crustal movement monitoring network in the U.S. using NASA equipment. By late 1983, NGS will assume full responsibility for the regional crustal monitoring network in the U.S., and will use its own mobile VLBI equipment [Coordination Plan 78].

The NGS has committed itself to the complete readjustment of the 1927 North America Datum by 1983. This effort involves the reprocessing of approximately 1.5 million traditional ground survey

observations of directions and distances that were acquired over a period of more than 100 years and which are being computerized in the National Geodetic Survey Database (see Appendix C.2). This base of classical data will be supplemented by approximately 200 Doppler stations in the United States [Hothem 76].

o United States Geological Survey.

The USGS is given the responsibility for a variety of geophysical programs. These include the development and dissemination of knowledge of natural hazards such as earthquakes, volcanic eruptions, and land subsidence. In carrying out this work, geodetic measurements are sometimes a necessary input. Presently, these geodetic measurements can be accomplished by land-based methods. The USGS Office of Earthquake Studies is working in conjunction with other government agencies in the development of a global Crustal Dynamics Program for the study of worldwide tectonic activity [Coordination Plan 78]. Presently the Earthquake Studies office is interested solely in temporal changes in geodetic position annotated by the dates of these measured changes. This is a very limited dataset and does not at this point require computerization [Savage 79]. The major data management problems in the USGS concern high-volume data types, particularly seismicity and seismic waveform data. For example, because of data volumes, only earthquakes of at least magnitude 4 are currently sent (by computer card) to the National Earthquake Information Service of the USGS (see Appendix C.8).

It is reasonable to assume that as accuracies for space-derived geodetic data improve, the USGS will use this as one of its data-producing techniques. However, the USGS feels that milestones for operational utilization of space techniques will not be developed until the techniques are essentially validated and the operational parameters, such as accuracy, cost, and system operability are known [Coordination Plan 78].

o Department of Defense

There are several organizations within the Department of Defense which have a specific association with or need for geodetic information. These include the United States Naval Observatory, Defense Mapping Agency, the Naval Research Laboratory (NRL), and the Naval Surface Weapons Center (NSWC). The NRL and NSWC conduct supporting research and development in geodesy for the other two.

The Defense Mapping Agency (DMA) provides, as part of its basic responsibility, geodetic and geophysical support for current and projected weapons systems. The current capability for mapping, charting, and geodesy has evolved from R&D ventures. VLBI and laser ranging techniques are viewed as evolving technologies. They are thus of interest to the DMA in support of future weapon system developments. They can provide independent measures of the size and shape of the earth and earth motion parameters. This can lead to increased accuracy and reliability for weapons systems.

The United States Naval Observatory has primary responsibility for the official keeping of time for the U.S. Federal Government. This mission includes providing data to U.S. naval vessels and aircraft to serve as aids for safe navigation and the keeping of accurate time. The Doppler satellite ranging system is such an aid, for it allows ships to determine their exact locations within 5 meters with one pass of the satellite [NRC Geodesy Report 78]. VLBI and laser ranging both allow the motion of the earth (polar motion) and UT1 to be measured more accurately than can be done currently using optical means. This is necessary for precision in navigation [Coordination Plan 78].

o National Science Foundation

The National Science Foundation (NSF) provides basic support of radio astronomy and geophysics research and facilities, as well as investigations concerning earthquakes and related phenomena [NSF/USGS 76, Coordination Plan 78]. Support for much of the U.S. academic effort in geodynamics is through the NSF Geophysics Program. Most of the fundamental research programs in NSF respond to unsolicited proposals. Hence, the requirements of the NSF user community, most of them university researchers, are difficult to project [Coordination Plan 78]. However, NSF has in the past funded major, interdisciplinary studies that required principal investigators to share data through a "project data center." These data were eventually archived in the National Geophysical and Solar-Terrestrial Data Center (NGSDC) of EDIS (see Appendix C.4). Some of these projects, in support of the International Decade of Oceanographic Exploration, include the Deep-Sea Drilling, Climap, Geosecs, and Seatar Projects [Meyers 79].

o National Academy of Sciences

The National Academy of Sciences is not a potential supplier or user of data, but represents a wide cross-section of the research community and sponsors studies of problems facing researchers. Two of its units relevant to the CDIMN are the Committee on Data Interchange and Data Centers (CDIDC) of the Geophysics Research Board (GRB), and the Committee on Geodesy.

The CDIDC has studied the impact of the growing volume of geophysical data on geophysical data centers. Its recommendations include the expansion and improvement of World Data Centers, utilizing computers more, and providing summaries or abstracts that "will be required by much of the user community" [GRB Data Committee 76]. More recently, this Committee has assessed the requirements for geophysical data interchange. Its recommendations in the area of Solid-Earth Geophysical Data addressed the needs for better archiving of existing datasets; for an interdisciplinary and interagency approach; for data management distribution and archiving plans for data-intensive projects; for cross-referencing of all data holdings in various data centers; and for remote computer access to those indices as well as the most-used datasets [GRB Data Committee 79]. The Geophysics Study Committee of the GRB is now investigating the issues associated with

the development of a national geophysical data policy, which was a general recommendation of the CDIDC studies [Usselman 79].

The Committee on Geodesy has established a Panel on Crustal Movement Measurements which is concerned specifically with the study of interdisciplinary topics relating geodesy and seismology. This has been interpreted as meaning the use of geodetic information to predict, analyze, and evaluate seismic events. The mission of the Panel, as articulated by Chairman Adam Dziewonski of Harvard University, is to consider the issues of crustal movement measurements on a global scale. The Panel decided that a strategy for observations over a broad spatial and temporal spectrum should be developed. The Panel will primarily act as a forum for governmental and university researchers, and its findings are likely to impact the emphasis of funding for university researchers by other government agencies.

3.2 UNIVERSITY RESEARCHERS

The majority of potential direct users of a CDIMN are university researchers, who differ in several respects from users in governmental agencies. Academic users are not concentrated geographically, and this implies that the communication facilities needed to link these users to an information network may be more complicated than for the more highly centralized governmental users. University researchers have no well-organized voice with which to declare their data needs but must act primarily through related professional societies. The computing budget and computing resources available to the university researcher are not nearly as extensive as they are for government researchers and industrial users. This means that the university researcher will have greater use for any additional computing power which can be obtained over the network.

The academic researcher needs a data catalog. Geophysical research in the universities is diversified, and many researchers may deal with the same phenomena but based on different theoretical assumptions. Data is needed to test these assumptions. In some geophysical research, geodetic data can play a critical role. This is especially true in studying seismic events and plate motions, two subject of vital interest currently. Specific examples of geodetic data requirements are given in Section 4.2.6 of this paper. A researcher will sometimes rely upon others to collect even the primary data he needs to evaluate his hypotheses. Regardless of his ability to measure data first-hand, the researcher's effort can potentially be enhanced if he has access to clear documentation on what geophysical data is extant. The researcher can then use more data to test and evaluate a theory.

The researcher needs to have geodetic data in a form where it can be accessed and manipulated easily. Some researchers can spend over a quarter of their research effort putting the data into a format that they can then process. Some geophysical data are recorded so poorly that, realistically, they must be considered presently unusable.

To understand the full meaning of the data, the researcher needs to know its history and must be able to examine the data at various stages of its reduction. This means data, to be useful, must be well documented and available in various stages of processing.

Geodetic data will be used in conjunction with other data which is specific to the individual researcher. The researcher will need a system which facilitates the mixing and combining of these various types of data.

3.3 INDUSTRIAL USERS

There are presently many industrial organizations which use geodetic information. Some obtain this information from an agency of government and thus do not generate the data themselves. Others have a staff of surveyors working for them or use a surveying firm on a consulting or contractual basis. It is this group of private surveyors and surveying companies which will be the most logical candidate for use of these new technologies.

The problems that these professionals address deal with land location or land movement. Surveying by or for industry is still done predominantly by land-based techniques. The larger and more progressive organizations utilize electronic distance measuring (EDM) equipment for measurements; computers for computation, data storage, and mapping; and photogrammetric methods for mapping [NRC Geodesy Report 78]. Some surveying companies presently use Doppler satellite ranging [Brown 79]. As VLBI and laser ranging equipment become more portable and cost competitive, their use will increase.

Industrial users, in general, have requirements that are different from university researchers and government agencies. Except for a few basic research departments in larger corporations, their data requirements are fairly simple, structured, and may be specified in advance of the need. Hence the industrial user generally requires less flexibility, cataloging timeliness, interactive access, and ancillary data types. He is unlikely to request any but processed data, and usually is less concerned with the details of acquiring that data than a university researcher would be. Industrial users are as geographically and institutionally dispersed as university users, but have less diverse interests and usually are able to justify expending reasonable amounts of money to acquire the data they need. As with university researchers, industrial users need to integrate this data with their own data and to process it further with their own programs, possibly on their own computers.

3.4 INTERNATIONAL USERS

Other nations have users, producers, archivists, and applications of crustal movement uses for geodetic data which closely resemble those of the United States. In some cases, the United States is working in conjunction with foreign governments on projects having mutual benefit: global plate motions are inherently international in scope [NASA Intl. Plan 79]. For example, NASA is planning to use data

from the Onsala Observatory in Sweden and other foreign sites for its global measurement of plate movements (Coordination Plan 78). The five-year plan (FY 1980-84) of the USGS's earthquake prediction program emphasizes attempts to "trap" two earthquakes of magnitude at least 6.5, mostly in Alaska and foreign areas where "seismic gaps" have been identified [Kisslinger 79].

There are research efforts currently underway in several technologically advanced countries which will lead to geodetic data acquisition using equipment in space. The Lageos system prompted seven proposals from European investigators. The European Range Operations System (EROS), a consortium of approximately 10 stations in 6 countries, already exchanges some laser ranging data with the NSSDC through its data center in Greece [Coates 79, Smith 79a].

International archiving and exchange of data is accomplished through the World Data Centers, and major, recognized international "permanent services" [IUGG/IUGS 79, World Data Center A 73]. An example of a "permanent service" is the International Center on Recent Crustal Movements in Prague, Czechoslovakia, which is automating its data storage facilities. Although this Center's database is now strictly bibliographic, it may become a World Data Center [Meyers 79]. The Bureau International de l'Heure in Paris is the recognized international coordinator for UT1 and polar motion data. The International Gravity Bureau, also in Paris, serves a similar function for world-wide gravity measurement and standardization [IAG 79].

The international community has strongly endorsed the need to maintain, expand, and improve the World Data Centers, and to improve communication among them. The draft findings of a study [IUGG/IUGS 79] by the International Union of Geodesy and Geophysics (IUGG) and the International Union of Geological Sciences (IUGS) emphasizes more international cooperation, more intercomparison of data types, the expansion of National and World Data Centers, and early planning for data management among its recommendations for a new international, interdisciplinary program of research in the fields of geology, geophysics, geochemistry, and geodesy. This program, entitled "The Lithosphere," would be initiated in 1980 to succeed the International Geodynamic Project [IUGG/IUGS 79, Kisslinger 79].

There exist international users having the same characteristics as each of the domestic classes of users discussed above, but because of prohibitive communications costs, few international users are likely to use the CDIMN in an interactive mode. Most requests will be similar to those currently handled by the NSSDC, for a batch of data to be mailed on a magnetic tape based upon published catalogs, or for information such as maps, graphs, charts, and other "hard-copy" summaries. Eventually, however, the other World Data Centers will require near-real-time access to information in the CDIMN, particularly its catalog and its operational data on UT1 and polar motion.

3.5 GENERAL PUBLIC

Suprisingly, the general public (exclusive of industry) was identified by the GRB assessment of geophysical data centers as the largest category (38%) of users of existing EDIS centers [GRB Data Committee 79]. And the Freedom of Information Act is likely to increase this usage even more. Attempts by the authors of this report to identify and contact potential general public users failed. However, it is anticipated that their requirements will be quite varied and ad hoc, almost exclusively for highly processed (i.e., not raw) and summarized data, poorly formulated and ill-structured, and rarely needed in real time. Scanning a catalog and abstracts of available data will be their primary method of access to the CDIMN. The catalog should provide these users with non-technical documentation, and should permit them to limit catalog browsing to highly processed or summary datasets within geographic and temporal boundaries of interest.

SECTION 4

INFORMATION SYSTEM ISSUES

There are a number of issues which relate to any information system for geodetic and related geophysical data as it is being designed and implemented. As one addresses these issues in the process of formulating a conceptual design for an information system, one is not led inescapably to a unique set of design requirements and specifications. There are many different design scenarios which are possible. These may vary with regard to the extent of the system as well as the functions the system will be capable of performing. As one attempts to define a system concept which satisfactorily resolves some or all of these issues, one will find this resolution of issues serving as a useful guide in the construction of the system.

These issues have been discussed with a broad segment of the geophysical community. On some issues the responses of those interviewed have been fairly unanimous. On other issues, there has not been close agreement. This difference in response patterns is reflected in the discussion that follows.

4.1 SYSTEM CHARACTERISTICS ISSUES

The first set of issues is of a general nature and relates to the design of applications information systems as a whole. They are not issues which are relevant just to geodetic information. These issues relate not only to the computer hardware and software which will be used, but to the total system: the users and providers of data, the personnel designing and maintaining the system, and the organization overseeing the operation. It is a clear lesson of computer history that focusing in on issues involving only hardware and software is a swift method for producing a system which serves no one's needs adequately.

4.1.1 Controlling Personnel

The personnel involved directly in the initial design and on-going development and operation of a CDIMN could logically come from two separate, distinct disciplines -- information systems and geophysics. It is important to have personnel from both fields involved in the entire process. These two types of personnel have complementary abilities.

The geophysicists are most knowledgeable about the collection, calibration, validation, processing, and display requirements of the information system. After the information system is in operation, they can interact with the geophysical community in an on-going assessment of data needs. They can aid users in understanding and interpreting the geophysical elements contained in the system, and help the user in formulating queries to extract a maximum amount of information. As data are collected for inclusion

into the system, geophysicists can determine the criteria for validating data, the documentation necessary to make data useful, and whether the data have been collected using standard acceptable geophysical techniques.

On the other hand, the information systems specialists are best suited for designing the system and monitoring its operational performance. They are familiar with the storage hierarchies, retrieval mechanisms, communication media, and user interfaces necessary to a smoothly running system, both from an internal point of view and as the users perceive it. They will be able to "fine tune" the system so that it performs at an optimum level. If new information structures and techniques are required to expand the system as both the stored data and the size of the user group increase, they can be implemented best by the information systems personnel who routinely track new information processing technologies.

The majority of users interviewed agreed that the final control of the information network must reside with the geophysicists. The data producers and users will have more questions related to geophysics than to information systems. The information specialists will play a vital role "behind the scenes", but the geophysicist must deal with the "public".

4.1.2 Timeliness

The information system will be useful only if the appropriate geophysical data are incorporated into the system within a reasonable period of time after they have been gathered and processed. A method of data gathering must be constructed which allows principal investigators to be the first to publish an analysis of their data and yet allows timely access to the data by other interested users. It is important that the producers of the data have some reason for giving their data to the system. There are several possible reasons:

- Facilitation: The system might function so well and prove so useful that investigators will want to send their data for incorporation to speed their own research. This reason may be too idealistic.

- Financed contribution: Some investigators might be given funds to produce data specifically for this information system.

- Required contribution: Research groups could be given grants with the requirement that the results of their work must be sent to the information system. This approach is difficult to enforce.

- Barter: A requirement for use of this system by any group could be that they will also give their data to the system.

The Geophysics Research Board (GRB) of the National Academy of Sciences has recommended that "all organizations engaged in such (data-intensive) projects should be strongly encouraged to make their results available to the WDC-A in a mutually acceptable format suitable for archiving." Additionally, they recommend that "all data collected with government funds should be made available to the scientific community within a fixed period (preferably one year) after collection" [GRB Data Committee 79].

4.1.3 Centralized Versus Distributed Computing

In this age of ever cheaper minicomputer systems, it is no longer mandatory to have the system centralized. Distributed computing may be a feasible and attractive alternative. If there are a small number of primary users of the data, it may be cost-effective to provide each with a copy of that portion of the database which he is most likely to need. In fact, most of the primary user agencies already have computer hardware and software of some sort (see Appendix C). In a distributed system, primary users can be connected by a network so that any sharing of data is timely. The minor or infrequent user might be able to access the data in the system by contacting the primary user geographically closest to him. If the system is distributed, it may be easier for the data providers to enter their data on the system, and for new users or producers to join the system in the future. However, distributed systems may increase communication costs and coordination problems.

It is expected from our interviews that the major users of the data will also be the major suppliers of that same data, which argues strongly in favor of such a distributed system. For example, virtually all of the use of data to date collected in the Goddard Space Flight Center VLBI Database has been by in-house users [Ma 79]. The GRB has also recommended archival of data at the collecting institution [GRB Data Committee 79].

4.1.4 Mode of Interaction

There are two modes in which an information system can function--batch mode or interactive mode. The consensus among those interviewed was quite strongly in favor of the system having some interactive capability, but such interaction is costly. It must not be taken as an assumption that people can sit at terminals and think fast enough about geophysical data to make it necessary to have a fully interactive mode. There are several categories of interactions the users may have with the data. At a minimum they will need to find out what data is in the system. Thus the system will require a cataloging capability. Immediate access to large volumes of data is required only for operational applications such as time synchronization, UT1, and polar motion determinations, but is desirable and not cost-effective in most research applications. The experience of the NGS is that delays of a few minutes or hours are tolerable, but the NSSDC found most researchers willing to wait up to a month for a copy of a data tape (see Appendices C.2 and C.3).

Since data gathered by different data producers may vary widely in quality and content, the users will wish to examine a sample of the data, to see how they have been processed, more often and more readily than the entire dataset. Once the user has identified the datasets he wishes to study, he must combine and manipulate the datasets until he can see patterns develop. Many times patterns are easier to recognize when the data is displayed graphically rather than in tabular form. A good quality interactive graphics capability is required by many of those interviewed, and has enjoyed wide usage when available (see Section 5.2 and Appendix C.6). When the interactive session has concluded, the user will probably require hard copy output. Thus some plotting capability will be necessary in conjunction with the graphics [Vette 79].

4.2 DATA CHARACTERISTICS ISSUES

The next set of issues deals with the data that is in the information system. This includes both geodetic and ancillary data types.

4.2.1 Validation

Data that is provided to the system will be useful only if it is of sufficiently high quality. It will be necessary to establish and enforce quality standards for this data. The standards could be set by either a group of the major producers of the data, by the agency which maintains the system, or by the users of the data. No consensus as to which group should predominate currently exists among users. Whoever sets the standards must realize that all three of these groups must agree to the adequacy and acceptability of such standards.

4.2.2 Documentation

One point in which the geophysical community seems in wide agreement is the need for adequate documentation of the data. This documentation should be at least as available to the user as is the data itself. At a minimum the documentation should describe the manner in which the data was collected and reduced. Other required information includes the values of relevant parameters involved with data collection, including those of the platform upon which the sensor was located [Painter 79], the models and assumptions used in processing the raw data, and information identifying the individual who actually collected the data, so that other researchers can personally contact the data producer for details. In addition, the data producer must provide the data center with sufficient documentation so that it can read the data supplied [Smith 79a]. Particularly for data types collected or reduced by techniques that are not universally accepted, an open-ended "pedigree" of the dataset should be maintained. It would chronicle all changes, validation, modeling, etc. that the data has undergone, plus articles in the literature that reference that data [Harrison 79, Kisslinger 79].

4.2.3 Processing Requirements

Several types of operations can be carried out on the data stored in this system. One class of processing is dominated by scientific calculations, sometimes referred to as "compute-bound" processing. Examples in geophysical data processing include time series analysis, modeling adjustments, data inversions, spectral analyses, and other types of scientific calculations. It demands hardware that can handle large numbers of floating point calculations swiftly and accurately (i.e. with a large word size).

Another class of processing having different requirements can be labeled data management operations. An example of such tasks could be to find all survey points in California between 35° and 36° latitude which have moved more than 5 cm in the last five years. The types of hardware and software requirements needed for this type of data analysis are much different than those needed for scientific calculations.

A third class of processing encompasses tasks associated with user interaction, such as graphics display, command interpretation, etc.

Networking of computers with various types of capabilities seems a feasible solution for meeting the variety of computer capabilities that is needed for all processing requirements. At Goddard Space Flight Center, the need for computers with different types of computing power was solved by utilizing two computers in its VLBI system, an HP 21 MX and an IBM 360/91. The IBM computer handles scientific computations swiftly and the HP computer manages interactive processing well [Ma 79].

Further investigation will be necessary to determine the relative frequencies of various types of operations in the specific CDIMN under consideration. Before the final detailed system concept is formulated, it is important to assess the approximate percent of time the system will be performing these different classes of functions. Initial indications are that all are equally important.

4.2.4 Raw vs. Processed Data

The primary type of information that those interviewed need in the CDIMN is completely processed data. In the case of geodetic observations, for example, this would consist of site identification and location, and the time of collection, or baseline vectors between pairs of stations, identified relative to established benchmarks, plus the time of collection. The techniques, assumptions, and environmental parameters involved in data collection and reduction must be stored in the system also. There was a strong feeling on the part of the people interviewed, however, that copies of the supporting data at various levels of processing should be retained in the system and archived at certain stages. A study by the Geophysics Research Board of the National Academy of Sciences determined that the greatest number of requests will be for partially processed data [GRB Data Committee 79]. For example, the database system at Goddard Space

Flight Center for VLBI experiments does this (see Appendix C.1). In this way, investigators can study a seemingly significant event in the final data by reexamining the processing of the data during several previous stages, even going back to essentially raw data if necessary. The event may in fact be a geophysically meaningful occurrence or may be some extraneous mechanical anomaly. Investigators prefer to determine this difference directly for themselves and like not to rely totally on some unfamilar analysis. For example, 90% of the researchers responding to a recent request for proposals for Lageos data required raw data [Coates 79]. Data archiving can also be facilitated if the entire sequence from data collection through reduction to processed information is automated in the system.

4.2.5 Entry of Pre-Existing Data

There is an enormous amount of pre-existing geophysical data which might be of use to some research efforts (GRB Data Committee 79). To conduct research on geophysical phenomena, one requires data gathered over a long time span. Definitive geophysical patterns form slowly. The data which have already been collected are stored on many different physical media, are in a variety of different formats, and have been collected by many different types of equipment. The CDIMN must be designed to ease and simplify conversion of the data that users may want to introduce. Interviewees have said that there are geodetic data they would like to use for their research, but simply cannot because the data is hard to locate, examine, process, and interpret. The CDIMN system must alleviate these deterrents to data use.

4.2.6 Densities

There are many issues related to the spatial and temporal densities needed for data to be in the CDIMN. The principle determinant for these densities is the nature of the experiment being conducted. Some examples for geodetic observations will illustrate the diverse scientific requirements. A.E.E. Rogers of Haystack Observatory feels that to study global tectonic plate motion, 2 or 3 antennas on each tectonic plate are needed, and that measurements should be made approximately 4 times per year [Rogers 79]. Professor Aki of MIT, in studying stresses associated with earthquakes in the Izu area of Japan, would need measurements at least at intervals of 10 km covering roughly 100 x 100 km, with the precision of, at least, 1 cm [Aki 79]. Professor Turcotte of Cornell, in studying stress fields along the San Andreas Fault, proposed using geodetic measurements of varying densities. The densest set of measurements would be nearest the key portion of the fault at a density of one per 2 km^2, and then decreasing to one per 8 km^2, one per 50 km^2, and finally one per 1250 km^2 when the surveyed sites are between 50 and 300 km from the active site [Turcotte 79]. Jim Davis, State Geologist in the Division of Mines and Geology for the State of California, would find it useful to have a broad network of permanent observation stations strategically located throughout tectonically active parts of California and western Nevada. The network for California might, for

example, consist of 20-30 stations located at an average spacing of 100-150 km. Observations would be taken at 3-5 year intervals [Davis 79].

Mobile instrument networks would be deployed at greater densities prior to, during, and after an earthquake, if possible. For example, Karen McNally and a group from Caltech's Seismological Laboratory quickly densified the seismographical instrumentation near Oaxaca, Mexico, in connection with the magnitude 7.9 earthquake there on 29 November 1978.

No firm agreement exists for the spatial and temporal densities of measurements for use in earthquake prediction. The above figures give some indication of the range of data density requirements. It seems certain that as the space-derived techniques become operationally available, the desire for increased spatial and temporal densities will manifest itself.

4.2.7 Retrieval Keys

In an information management system, data records are accessible using a variety of keys which are contained in the records. One must decide what primary keys will be used in accessing data. Those which most potential users feel are necessary are keys based on time and on the three spatial coordinates of measured sites. The system should be able to translate between coordinate systems. In this way, all users need not use the same coordinate system for each request for data. As an information system is designed, it must be decided if more sophisticated primary keys should also be routinely available.

4.2.8 Storage Media

While an enormous amount of data may be available in the CDIMN system, only a small percentage of it may be used at any one time by a researcher. It seems logical from an information systems perspective to have entries in the system which point to the data that are available, rather than to have the actual data in on-line storage (e.g., NGSDC, NSSDC). For example, people who are studying strain on the San Andreas Fault need completely different data from people studying subsidence in the Houston area. The interviewees concur in this view. Once specific subsets of the total database have been identified, they can be transferred to primary or fast secondary memory for use. There must be some on-line browsing or catalog search capability, so that users can see what datasets would be useful in their investigations. At a minimum, therefore, the system will require high access speed disk, tape (primarily for batch data transfer), and some high-volume, medium access speed archival storage media at the nodes of the network. In many cases, these media already are implemented within the computer systems of the anticipated CDIMN participants.

4.2.9 Entry and Usability of Ancillary Data

An important issue is the usability of ancillary information in the system. This type of information may be on paper

tape, magnetic tape, punched cards, or noncomputer-oriented media. The information may be essentially raw, partially processed, or completely processed. The user may need to change the raw data to completely processed data. On the other hand, if the user wishes to process the data in a different way, he may have to revert the processed data to a more elementary form. The relevant data may have been interwoven with other data for which the user has no need. The format of the data used on the storage medium may be designed for one specific configuration of hardware and operating system.

All these facts point conclusively to the need for the system to have a powerful editing and reformatting capability. The user must be able to describe in simple terms the format of the new input data, the format the data should have in the system, and/or the format of any data output. Because the documentation on data tapes may not be sufficient, and the user may have to examine the tape to see how the data must be reformatted and reprocessed, these editing functions must be interactive. The user may want to assess the quality of the data before he decides to use it. This editing facility can save a great deal of time for geophysical researchers. Many of those interviewed described the difficulty of converting data into usable form. One scientist said he spent 25% to 30% of his time just dealing with data preparation and data format questions, an obvious waste of scientific potential.

4.2.10 Ancillary Data Types

There was not common agreement on the specific ancillary (other than geodetic) data that geophysical researchers would need. The ancillary data mentioned most often, naturally, were gravity data. Second most often required was seismicity data. The other ancillary information that the user needs may come from the user himself or from an external data source. As has been mentioned previously, it seems that the information system will be most useful if it has the capability to facilitate the introduction of ancillary data regardless of the original source of the data. This gives added emphasis to the previously stated need for easy, yet powerful, editing and reformatting capabilities. It also strongly suggest the use of a generalized data base management system (DBMS) as the module responsible for data storage, input/output, and manipulation.

4.2.11 Compatibility of Data

If the user is given easier access to a wide range of data because of this powerful editing capability, the data from separate sources should hopefully be compatible. If data is incomparable at the time it arrives at the computer, it is possible that little can be done using the information system to make the data compatible. If proper documentation accompanies the data, then it may be possible to transform the data to some common form. Sometimes even documentation may not help. For example, if two sets of relative gravity measurements are available but there is no common or absolute measurements to connect them, this may limit the compatibility of these data. The geophysical community may want to establish and enforce more standards of data collection, validation, and exchange,

so that commonality of data use is enhanced. By removing one obstacle to the use of data, format incompatibility, another obstacle, data incompatibility, may become all the more apparent. The resolution of this obstacle would seem to have a useful side result, namely, increased data compatibility.

4.2.12 Quantity of Data

The CDIMN will have to accept different data types and different data volumes if it is to have wide applicability. The most common data type will be sequences of data measured over time. Supporting information should be logically close to the geophysical observations. The magnitude of data can vary tremendously. Seismic data, in the form of analog seismograms recorded at several sites and digitized at 50 to 100 Hz, is an example of high-volume data (approximately 3000 samples per minute per station). At the other extreme, one scientist requires magnetic measurements from seven stations, each recording data once a minute. Monitoring linear movement along a fault may require only several hundred or several thousand baseline vectors. However, because plate movement is episodic, these measurements would have to be collected over many years [Kisslinger 79].

It is perhaps appropriate to design a system which can handle most data demands very easily, but which will be slow or incapable of handling very large-volume data demands. It is possible to have a network of computers available in the CDIMN with one large-scale computer available on a time-sharing basis to handle unusually large requests.

4.2.13 Processing

The scientific software the CDIMN should have seems fairly standard. Besides the usual data management routines for data distribution, retrieval, and manipulation, there should be packages for statistical analysis, time series analysis, and graphics. The system should be able to construct maps and overlay different types of data on them. Contour plots and profiles should be easy to draw. User-specific procedures should be easy for the user to construct, and the routine should encounter no difficulty in accessing the needed data.

In many cases, potential participants in the CDIMN have already developed some of the software to perform these functions. Hence, the primary requirement is for processing which facilitates manipulation and data exchange, and secondarily, program exchange.

4.2.14 Data Output Characteristics

The CDIMN system should have the capability of providing output in several forms. Final products may be displayed in the form of tabular listings, formatted listings, and graphic displays. The output which will be used by an investigator for still more processing will most likely serve as input to yet another computer. The media used for this output will be primarily magnetic tape, and to a lesser

extent, punched cards and paper tapes. The user should have great latitude in specifying the format of the data on the tape. The system should have a language subset which can be used to describe the output format. This is important because the user will very likely have preexisting applications programs with rigid data input requirements. In the absence of a generalized DBMS, 80-character "card" format is almost universally acceptable [Levine 79]. However, this standard would still leave unsolved the varying character codes (ASCII vs. EBCDIC vs. FIELDATA) of different brands of computers.

4.3 INTERCOMMUNICATION OF DATABASES

The last and perhaps most important set of issues that is germane to the construction of a CDIMN deals with the connection between presently existing geophysical data management systems. There is a large amount of geophysical data presently available on magnetic tape or other storage media which has been collected by a wide variety of institutions (see Appendix B). There are several well organized database centers (see Appendix C). Several agencies of the Federal government, including NGS and USGS, routinely provide data to a large number of interested users upon request. Catalogs are published listing various types of geophysical data and giving the organization to contact to obtain such data [World Data Center A 78]. There is a limited computerized environmental data locator service, Environmental Data Index (ENDEX), maintained by the Environmental Data and Information Service of NOAA (ENDEX 76).

It seems much more efficient to construct a new system that builds on what is already in existence, rather than essentially duplicating from scratch one or more of the presently existing systems. Any new system for handling geodetic data should be designed to complement these existing systems. Access to these present systems should be facilitated through any new information network. Transfer of data should be speeded up, and the process of data transfer should be made to appear more uniform to the user.

4.3.1 Compatibility and Communications Interfaces

One of the main issues involved in the construction of the CDIMN will be how to tie all these existing systems together. The CDIMN will have to provide an interface between many of these existing systems. Should there be one standard interface through which all computers must communicate, even if they can already interface with one another? For example, the USGS is supplying identical computer hardware (DEC 11/70) and software (including the Geolab system -- see Appendix C.6) to approximately six of its affiliated research institutions per year [Harrison 79]. Similarly, Haystack Observatory, MIT, Goddard Space Flight Center, and eventually NGS will all be able to share data quite readily because each will have an HP 21 MX computer [Ma 79]. However, such inherent "mini-networks", although fortuitous, do not solve the larger problems of exchanging data with other dissimilar machines as the requirements of users change or as one institution in the mini-network is forced to change its system hardware or software configuration. The method of accessing data in the present systems may differ widely from system to system. It has not been determined whether the existing systems should be linked

either directly or via small interface computers (similar to the IMPs of the DARPAnet), or if they should emulate users of a system by dialing up that system's user interface. These decisions are technical design problems that will need to be addressed.

4.3.2 User Interface

When a person uses the new CDIMN, the system should be designed to make most of these system differences transparent to the user. The users interviewed agreed that system commands should be easy to learn, oriented toward geophysicists rather than data processing personnel, and uniform from one system to the next, because the users do not have time to learn the complicated commands peculiar to each system. In the CDIMN, there should be a directory of the accessing procedures that the user may have available. The user then can formulate his request in a uniform and standard manner, and the system from which the request was formulated can translate this request into a form recognized by the database system containing the data. If the CDIMN allows the processing of data by several pre-existing systems, then again it should be designed so that the user uses only one processing language which is machine-translated into an appropriate chain of commands specific to the system being used.

4.4 SUMMARY

This discussion of the issues involved in the design of a geodetic information system has attempted to provide some focus on the functional requirements for such a system. It represents a preliminary development of the major user and functional requirements, and is not exhaustive. Many of the people interviewed have their own methods for working with geophysical data, and have not given much thought to the benefits which might be derived from the use of a well-designed CDIMN. Researchers may discover important requirements for the system only after they have had a chance to experiment with it. Future in-depth interactions with a key set of potential users will be used to provide more specific functional requirements.

SECTION 5

USER REQUIREMENTS

The preceeding sections of this report have presented discussions of applications, classes of users, and information system issues relating to a proposed CDIMN, in order to facilitate the generation of the following set of user requirements. These requirements are of necessity preliminary. The proposed CDIMN enjoys a wide scope of application areas and data types. Potential users are difficult to specify definitively because of the rapidly evolving nature of geophysical research, and because of a "chicken and egg" problem which plagues any new information system: Users will surface most readily after a system is operational, yet such a system is unlikely to be funded without a demonstrable user base. Even though the authors were able to document and contact a significant set of potential CDIMN users, many of those interviewed had given thought only to their minimum requirements for meeting immediate or near-future research goals. Some had difficulty recognizing the difference between an impractical "wish list" and reasonable user requirements because they were unfamiliar with the capabilities and trends of current information system technologies.

The first part of this section therefore describes a geophysical information system which is technically feasible using state-of-the-art information technology. The second part contrasts with a more limited scenario: one that has already been implemented. Finally, a set of essential user requirements for a CDIMN is summarized in the third part as a practical compromise.

5.1 A STATE-OF-THE-ART SYSTEM

The information systems technology currently exists to support a sophisticated, real-time, interactive information system for geophysical research. Such a system could permit direct and almost immediate access to the wealth of geophysical data currently distributed throughout the U.S. and in other countries, via terminals conveniently located in researchers' offices. By simply dialing up one of many host processors in a computerized network, any investigator would have at his fingertips the nation-wide base of currently digitized data, programs for analysis, and communications facilities that would significantly increase his capability to perform empirical and analytical studies.

The state-of-the-art mode of interaction is in the form of a dialogue with the computer. The user either chooses from a "menu" of possible choices the computer presents to him, or formulates a request in an English-like language. Immediate feedback from the computer would stimulate scientific productivity by permitting browsing and pursuing hunches. Such interaction with so powerful a tool is not possible when the scientists are separated from that tool by layers of interpretation by other people and/or the time delays of

procuring data tapes and submitting batch-oriented programs that are written in a standard programming language and require iterative de-bugging. The computer would perform the data manipulation and calculation functions for which it is best suited. It would present to the scientist information in a pictorial or tabular form that would facilitate the thinking functions for which he is best suited. Computers can generate the displays commonly used to support scientific analysis:

- o Graphs:
  - -- Axis Labeling
  - -- Data Plotting
  - -- Fitted Curves
  - -- Overlays
  - -- Cross-hatching

- o Maps:
  - -- Latitude/Longitude Lines
  - -- Continent Boundaries
  - -- Plate Boundaries
  - -- Stress Symbols and Arrows
  - -- Seismicity Symbols for Differing Magnitudes
  - -- Fault and Fracture Lines
  - -- Isopleths
  - -- Seismic Focal Mechanism Symbols
  - -- Other Special Symbols for Heat Flow, Crustal Movement, Wells of Different Depths, etc.
  - -- Multiple Parameter Display

The computer software and hardware exist to perform the underlying processing required by these graphics. Storage and database management technologies already allow the archiving, reformatting, and transfer of the prerequisite data to be transparent to the user. Computer networks have been implemented which offer to users an English-like user interface, geo-referencing data access capability, information generation capabilities through mapping and image overlay, user instruction, interactive browsing of catalogs, high-level programming languages for generating commands and processing of the user's own derivation, highly flexible display formats, etc.

Industry and certain fields of research such as medicine and major storm detection have availed themselves of one or more of these capabilities. Many of those familiar with the geophysical research community, however, view such a prospect for geophysical research as grossly expensive and unlikely to be funded through traditional funding sources. The unquantifiable extent to which progress in scientific research would be accelerated by such a system is not seen to justify the expense of implementing computer and communications technology to this extent. In addition, potential funding sources for such an effort are dispersed among many governmental agencies, none having a clear mandate to expedite all geophysical data analysis.

5.2 A CASE STUDY: THE COORDINATED DATA ANALYSIS WORKSHOP

An example of how computer technology can be effectively employed to enhance geophysical research, and the user requirements that can be satisfied by this technology, is illustrated by the Coordinated Data Analysis Workshop (CDAW). This workshop was held at the National Space Science Data Center on 11-15 December 1978 in support of the International Magnetospheric Study (IMS) Program. The CDAW assembled 21 participating researchers (each of whom had to supply data), five analysis consultants (who had no data to contribute), and ten observers (about four of whom became participants in the sub-group mode) from nine different countries, for the express purpose of studying together, in an interactive mode, the over 161 megabytes of data that were amassed on on-line disk in 43 datasets, each dataset corresponding to one experiment. The data consisted of 415 parameters obtained from 38 experiments flown on 10 different satellites, and 171 parameters obtained from 67 instruments comprising five different ground-based networks, dealing exclusively with magnetospheric phenomena.

After a brief plenary meeting, the participants in the workshop broke up into subgroups of approximately seven people to perform detailed analyses, using the computer to retrieve data. Experimenters whose data came from the same satellite tended to aggregate in the same subgroup. The participants were given standardized forms for requesting data from the database. These requests were handed to analyst coordinators, who were in audio contact with the computer terminal operators who generated the data plots. Users could request plots of any desired parameter with respect to time for any desired time period. Parameters generated by algorithms could also be plotted. Users could specify algorithms to transform the parameters (e.g., a transformation of axes) either before or during the workshop; 31 algorithms were provided before the workshop, and 72 algorithms were generated during the workshop. Algorithms specified during the workshop required approximately 10-15 minutes for implementation, and some algorithms could operate on up to 9 parameters. In addition, time averaging of the time series for any parameter could be specified by the user or automatically performed by the computer with a default value. Up to three plots could be juxtaposed in one "frame", with a maximum of two parameters per plot. The ordinate axis of each plot could be either linear or logarithmic, and the scaling of the ordinate axis could be either manually specified by the user as a range or could be automatically scaled by the computer based upon the range of values for that parameter in the database. Various plotting symbols and labeling capabilities were also provided as options. During the three days of the workshop, a total of 982 panels (plots) of data were generated. A plot of the actual usage of each dataset versus the dataset size is given in Figure 5-1. It is interesting to note that, in general, the very large datasets were used infrequently [Vette 79b].

It took about 2-1/2 months to build the database, including the software for reformatting, storage, and retrieval.

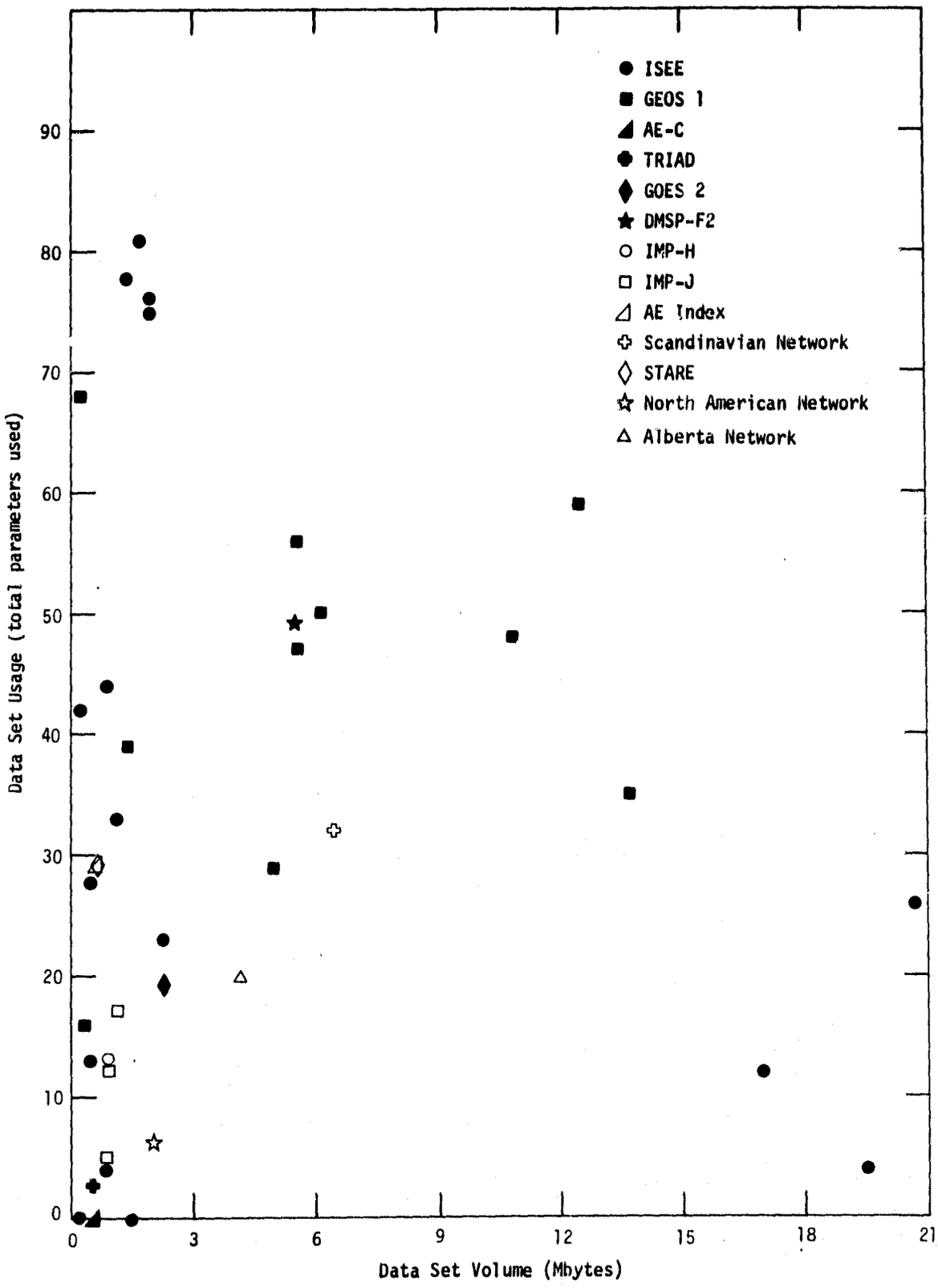

Figure 5-1. Size and Usage of CDAW Data Base

Based upon the experience gained from this first workshop, the operational costs of an idealized CDAW have been determined to be about $4.5K per participant (assuming entry and reformatting of data new to that database), including participant travel, planning, data entry and validation, documentation, etc., but excluding computer hardware and software development costs. The cost of servicing the database requests would be approximately $10.50 per frame requested, assuming 25 requests per week. It has also been "crudely" estimated that adding a "super" minicomputer, in order to handle approximately 50 remote users simultaneously, would cost $0.8M, with another $0.5M required for software development [Vette 79b].

The user requirements for this database were generated jointly by the scientists involved and personnel of the NSSDC. The scientists primarily decided what parameters and datasets to include in the database. The NSSDC personnel restricted the capabilities of the database to those most amenable to the interactive nature of the workshop. Compute-bound processing such as the generation of spectrograms was avoided in order to enhance turn-around time. Specific display requirements were based largely upon graphics observed by NSSDC personnel at professional conferences and in the open literature. Retrospective improvements to the database system that were suggested by the participants themselves are listed in Table 1. In addition, there was some expression by the participants of the desirability of being able to manipulate the common database from remote terminals at the participants' home institutions. Improvements 1 through 4 are already being incorporated into the CDAW software for future workshops. The new software will be completed by January 1980 and require about 3.2 man-years of effort. In addition, the NSSDC would like to add hardware capabilities such as an additional plotter and color terminals for mapping, in order to accommodate workshops for other types of databases. Plans already exist for at least two more workshops of this sort in this fiscal year [Vette 79a].

The CDAW concept, with the exception of physical co-location of scientists, is very similar to that for the CDIMN, and hence provides an excellent case study in actual user requirements for geophysical data analysis. It should therefore not be surprising that the capabilities and participant-suggested enhancements of the CDAW coincide considerably with the CDIMN user requirements which were distilled from the authors' interactions with potential CDIMN users and which follow.

5.3 A PRACTICAL SET OF IMMEDIATE USER REQUIREMENTS

Although the state-of-the-art system described in Section 5.1 might be ideal from the perspective of the user, the CDAW experience described in Section 5.2 indicates that a more limited system can significantly enhance scientific data analysis at a more reasonable cost. Furthermore, several of those interviewed by the authors felt that a state-of-the-art system could not be justified adequately to funding agencies. Therefore, this section outlines the

Table 1: Consolidated Participant-Suggested CDAW System Improvements [Vette 79b]

1. Algorithms. This capability is vitally important. It is very desirable to expand this capability to include:

   (a) ability to have calling arguments
   (b) ability to have algorithms call other algorithms
   (c) ability to operate simultaneously on data from different time periods
   (d) editing of on-line algorithm construction
   (e) larger storage arrays
   (f) better readability of verification display

2. Database Management. It is very desirable to improve this software to:

   (a) reduce granule size to avoid wasted storage
   (b) store data more efficiently
   (c) provide for rapid averaging or decimation of parameters
   (d) provide for time lag retrieval

3. Display. It is very desirable to expand capability to include:

   (a) ability to plot one or two parameters as a function of another parameter, where any of the parameters may be derived, rather than original parameters.
   (b) ability to add new capabilities in future
   (c) simple, flexible operator interface
   (d) ability to show data gaps for all line types

4. Data Catalog. This should be enhanced to provide rapid documentation and distribution for changes in database quantities, logicons, and algorithms. The ability to use an alias for a mnemonic would be very useful to ease the filling of forms by participants.

5. Hardcopy. Units should be available to produce hardcopy on demand.

6. Documentation. Explicit guidelines should be developed to insure that dataset owners provide proper documentation, including plots of each physical parameter for several time intervals to serve as verification intervals; this documentation should be provided to participants in advance to familiarize them with the database parameters, how they were constructed, and their limitations.

7. Analysis Coordinators. Having an "analysis coordinator" as a middle-man who is knowledgeable in both the discipline under study and the database system is extremely useful and helpful; one per subgroup (approximately seven participants) is desirable.

8. Data Entry. Timely submission of data along with proper documentation should reduce data entry costs.

fundamental problem areas that have been isolated, and a "bare bones" set of user requirements deemed necessary to solve those problems.

There appear to be three pressing problems associated with geodetic, seismic, and related geophysical information:

(1) Storage, distribution, and integration of crustal dynamics data. As the space-derived geodetic technologies become operational in the early 1980's, the full potential for the many applications described in Section 2 will not be realized adequately if the current lack of data exchange between the NSSDC, the Haystack, MIT, and Goddard VLBI Data-Bases, and the JPL systems continues. Comparison with conventionally-derived data in the NGS, NGSDC, and USGS databases will become increasingly important, particularly with the advent of the inexpensive GPS-based systems, for validation and integration of these measurements. As the number of astronomically-derived baselines grows, so too will the requirements for data exchange, outdating current manual modes of interchange. Data collection will leave the realm of research and development, and will have to attain some operational capability.

(2) Reporting of earthquakes to NEIS and EDIS. This problem affects the USGS primarily, and, to a certain extent, EDIS/NOAA. There exist many regional USGS-supported networks collecting waveforms of earthquakes, some having magnitude as small as 1.2 on the Richter scale [SCARLET 79]. Yet only a small fraction of that data gets transmitted to the National Earthquake Information Service of the USGS in the form of parameters of larger earthquakes. Eventually, the EDIS receives a limited amount of this and some waveform data for archiving and cataloging. The delays and limited quantity of information inherent in the NEIS and EDIS databases encourage users to bypass the services which NEIS and EDIS are best suited to handle, and to waste investigator resources locating, requesting, and satisfying requests for seismic data. With their limited resources, NEIS and EDIS can only process and store a limited amount of the available data anyway. The Geophysics Research Board has estimated the volume of the raw digital seismic data from local and global seismic networks alone is about 10^{15} bits/year [GRB Data Committee 79].

(3) Cataloging and Indexing Extant Geophysical Datasets. This is an inter-agency problem facing each of the several organizations engaged in geophysical research, and may best be addressed by the Geophysics Study Committee of the Geophysics Research Board of the National Academy of Sciences formed to study this problem (see the section on NAS within Section 3.1). There exists no complete, timely, computer-searchable catalog of existing geophysical datasets. To find data types with which a researcher is not familiar on a day-to-day basis, he must currently rely upon the same iterative, word-of-mouth personal reference system that the authors used to locate many of their contributors. A computerized data cataloging system would heighten awareness and utilization of datasets of

differing types having common temporal and spatial ranges. Computerized catalogs are common in bibliographic systems such as the National Technical Information Service (NTIS), NASA/RECON and OASIS [ENDEX 76], but catalogs of the datasets supporting that research have in the past been non-computerized [ICSU 73], not institutionalized for frequent updating [Lowman 79], and/or of scope limited at least to the originating institution [NSSDC 78, ENDEX 76, World Data Center A 78]. The required catalog needs to incorporate the best features of the scope of [ICSU 73], the varying data types of [Lowman 79] and [NSSDC 78], and the service-oriented, computerized-search capabilities of [ENDEX 76].

If the user requirements which follow are implemented in a system design, that system should be able to meet these presently pressing needs of the geophysical community. As users interact with the system, their perception of system requirements may expand and a need for the system to grow and expand can develop. Eventually the system could expand to the state-of-the-art system described in Section 5.1. While this state-of-the-art system would completely meet all the needs expressed above, scientists presently have not designed their investigatory activities to make maximum use of this level of sophistication. For example, research in some related disciplins, where a single agency had evident responsibility for funding virtually all data collection and analysis, has not yet required real-time access to its nonetheless centralized database [Jenne 79].

Accordingly, the following set of immediate user requirements for a Crustal Dynamics Information Management Network were distilled from the authors' contacts to date:

-- General and Information Distribution Requirements

- o Control by Geophysicists. Control of system requirements, policies, and procedures must be by geophysicists who are "close to the data", with information systems specialists in a supporting design and implementation role.

- o Flexibility for Growth. A CDIMN must maintain flexibility in accepting and manipulating varying data types in different formats, retrieval keys other than standard spatial and temporal keys, and widely ranging temporal and spatial observational densities. It must be capable of expanding its scope and functions, to serve needs not currently envisioned or cost-effective.

- o Computerized, Integrated Catalog of Extant Data. A detailed catalog of extant world-wide geophysical data is required in computerized form to permit browsing and complex information requests based upon multiple keys [DBMS Panel 79, GRB Data Committee 79]. The catalog should integrate the geodetic measurements with other geophysical observations, especially those relevant to earthquake prediction research, such as seismic activity, tiltmeter, strainmeter, and magnetometer

- observations. The catalog should permit flexibility in specifying the keys used for cross-referencing information, but at a minimum should key upon space and time. Keys for sensor type, principal investigator, and funding agency would also be desirable. In order to be effective, such a catalog must receive timely and complete inputs regularly from NASA, USGS, NOAA (NGS and EDIS), and major data-collecting universities.

- Data Exchange and Transcription. Users require timely availability of information in response to their requests, preferably in a couple of days for most requests, (e.g., a particular sequence of observations from a few sensors), but not to exceed a month for low-priority requests for large batches of data (e.g., a whole tape). A primary function of this exchange is transcription of data to different media types (e.g., paper to/from microfiche 7-track tape to/from 9-track tape, IBM-readable tape to/from Univac-readable tape, etc.), and reformatting of data from a format convenient for the data producer into a format convenient for the user's application. Real-time access to most data is not essential [Alger 79, Jenne 79, Vette 79a].

  Transfer of processing and analytic programs is not required by most users [Coates 79, Harrison 79], but could become a beneficial by-product of data exchange. However, portability of software poses more difficult technical problems than mere translation of programs into code readable by the receiving machine. Programs commonly used by several installations include those for sophisticated as well as common tasks, including validation, organizational, analytic, statistical, transformational, retrieval, and display functions.

- Integration of Data from New Technologies. Several of the applications described in Section 2 require the integration and comparison of geodetic measurements derived from different technologies, e.g., interferometric, laser ranging, Doppler ranging, conventional techniques, inertial systems, photogrammetric, etc., as well as gravimetric data. For example, the use of space-derived geodetic observations to provide base points for ground surveys will require the translation of these observations from an inertial, geocentric frame of reference to the common latitude/longitude coordinates of conventional survey measurements, and vice versa.

- Data Collection Standards. Standards for data collection to ensure compatibility and comparability must be established so that data collected by different producers may be integrated and compared in a meaningful way. This requirement does not necessarily imply a requirement for standardized formats.

-- Information Storage Requirements

- Data and Information Archiving. Efficient archival storage of current and future observations derived from the new astronomic geodetic techniques must be provided, preferably at the site where each dataset is most used. The size of the datasets that must be stored will depend largely upon specific user needs, the level of funding of developmental and operational capital equipment for making those observations, and upon policies concerning the length of time data should be retained. Archiving priorities and strategies are a technical design problem that will have to be addressed.

- Documentation. The CDIMN should maintain producer-supplied, detailed documentation on available machine-readable datasets. This documentation must be structured in such a way as to facilitate the transfer between data producer and data user(s) on a regular basis. It should include in particular the principal investigator collecting the observations, sensor platform (e.g., satellite name) and its characteristics [Painter 79], equipment used, major factors that were and were not accounted for and with what model, accuracies in root mean square form, and any restrictions on availability of data due to principal investigator rights to preliminary access.

  The documentation should maintain an open-ended "pedigree" of all changes, validation, reduction, averaging, filtering, or modeling that may have affected the data in any way [Kisslinger 79, Harrison 79] (see, for example, the file structure of the Goddard VLBI Database, Appendix C.1). An abstract expressed in terms understandable by generalists must supplement specific documentation aimed at specialists familiar with that data type.

- Format. Users most frequently require observational data in a simple card-image format (80-character records, with a specified blocking factor) which is FORTRAN-compatible and easy to store and display on various media, despite any inefficiencies such formats may incur.

- Storage Media. Magnetic tape is an almost universally available and acceptable medium for storing and exchanging data, particularly for large volumes of data sent to users with less sophisticated hardware.

- Data Refinement. At least initially, a large proportion of the users will be researchers who require access to relatively unrefined (i.e., raw) data, in order to verify observed anomalies and to revise models, as well as maps, summaries, and other more highly refined information. For example, 90% of those investigators responding to a recent LAGEOS call for proposals requested the data in raw form [Coates 79].

-- Information Retrieval Requirements

- Retrieval Keys. The catalog and the datasets it points to must permit flexibility in specifying the keys used for cross-referencing information, but at a minimum must be indexable via space and time. Keys for sensor type, principal investigator, and funding agency are also highly desirable.

- Cross-Referencing. Cross-referencing of datasets with bibliographic references which cite that data is needed by users who are unfamiliar with the literature for that data type or who wish to track the utilization of datasets [Harrison 79]. Cross-referencing is also needed between datasets and different analytic techniques, particularly those algorithms sufficiently accepted that computer programs for performing them are widely employed.

- Access Mode. Users will require interactive access to the catalog in order to formulate and refine inquiries interactively, much as they currently do with bibliographic indexing systems. Batch access to the datasets themselves is considered sufficient for research purposes, although some users would utilize data interactively if it were so available.

These then are the major user requirements which were used to formulate alternative system concepts for an initial implementation of a CDIMN. The preferred concept is presented in the following section.

SECTION 6

THE PROPOSED CONCEPT

Based upon the user requirements described in Section 5, the authors recommend the establishment of a Crustal Dynamics Information Management Network (CDIMN). This proposed CDIMN will be described in this section. Section 6.1 will present an overview of the CDIMN concept, including the rationale for chosen configurations. Then Section 6.2 will detail specific recommendations and roles for each of the U.S. government agencies and related academic institutions that should participate in the formation of the CDIMN. Finally, Section 6.3 will briefly discuss a possible schedule for implementation.

6.1 NETWORK CONCEPT

The proposed CDIMN is best viewed as a communications network that will expedite the exchange of geophysical information relating to crustal dynamics among existing geophysical data centers within the United States. Such a network will not necessitate the creation of a new "super data center", nor the expenditure of large sums for the centralization of data archiving functions, but rather will capitalize upon existing databases and the rapidly developing technologies for the interconnection of distributed databases. This network can grow and evolve as user demands and the quantity of data exchange expand. It is reasonable to anticipate that the increased awareness of available geophysical information provided by an initial CDIMN will prompt increased demand for direct telecommunication transmission of datasets now transmitted via slower media. Such an evolutionary, modular growth will permit the CDIMN concept to be proved before its scope is significantly expanded.

The overall layout of the CDIMN is shown in Figure 6-1. Major nodes of the CDIMN are three of the geographically separated World Data Center A's. The three major relevant World Data Center A locations are: (1) the World Data Center A for Solid Earth Geophysics located at the Environmental Data and Information Service of NOAA in Boulder, Colorado (see also Appendix C.4); (2) the World Data Center A for Rockets and Satellites at the National Space Science Data Center of NASA at the Goddard Space Flight Center in Greenbelt, Maryland; and (3) the World Data Center A for Rotation of the Earth at the U.S. Naval Observatory of the Department of Defense in Washington, DC. It should be noted that the World Data Center A in Boulder, Colorado, encompasses the disciplines of recent movements of the earth's crust, seismology, gravity, earth tides, magnetic measurements, geomagnetic variations, volcanology, and other disciplines relevant to crustal dynamics studies.

Although the ICSU's Panel on World Data Centers (geophysical and solar) has mandated the exchange of data between the World Data Center A's in the United States, World Data Center B in the USSR, World Data Center C in various other nations, and "permanent services" that are recognized international data centers but not under the auspices of

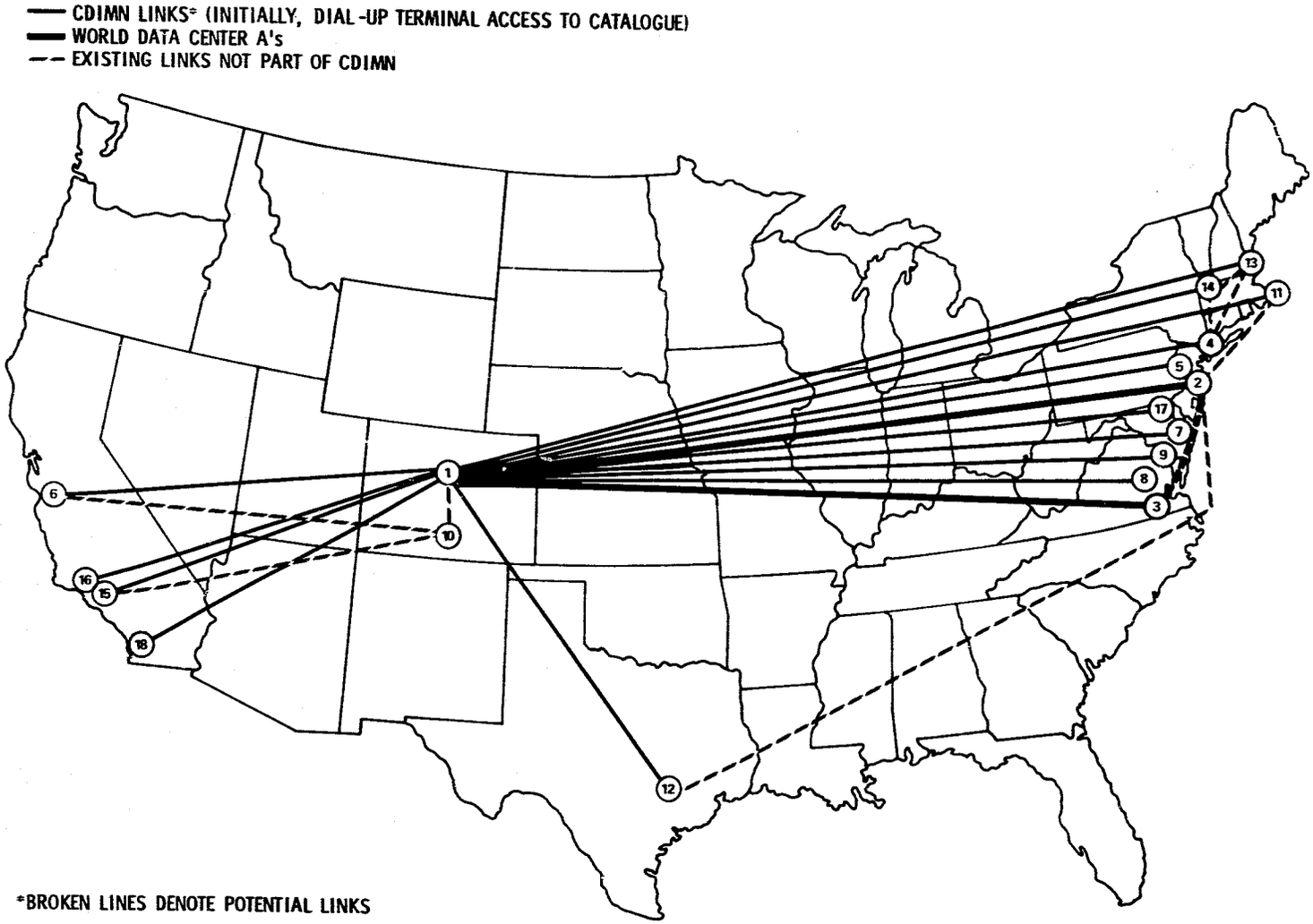

Figure 6-1. Overall Layout of the Recommended Crustal Dynamics Information Management Network (CDIMN).

A PROPOSED CRUSTAL DYNAMICS INFORMATION MANAGEMENT NETWORK

GOVERNMENT AGENCIES:

1. WORLD DATA CENTER A FOR SOLID EARTH GEOPHYSICS, ENVIRONMENTAL DATA & INFORMATION SERVICE, NOAA, BOULDER, CO
2. WORLD DATA CENTER A FOR ROCKETS AND SATELLITES, NATIONAL SPACE SCIENCE DATA CENTER, NASA, GREENBELT, MD
3. WORLD DATA CENTER A FOR ROTATION OF THE EARTH, U.S. NAVAL OBSERVATORY, WASHINGTON, DC
4. CRUSTAL DYNAMICS PROJECT VLBI DATA BASE, GODDARD SPACE FLIGHT CENTER, NASA, GREENBELT, MD
5. NATIONAL GEODETIC SURVEY DATA BASE, NATIONAL GEODETIC SURVEY, NOAA, ROCKVILLE, MD
6. GEOLAB SYSTEM, U.S. GEOLOGICAL SURVEY, MENLO PARK, CA
7. DEFENSE MAPPING AGENCY, DEPARTMENT OF DEFENSE, WASHINGTON, DC
8. NAVAL SURFACE WEAPONS CENTER, DEPARTMENT OF DEFENSE, WASHINGTON, DC
9. NAVAL RESEARCH LABORATORY, DEPARTMENT OF DEFENSE, WASHINGTON, DC
10. NATIONAL EARTHQUAKE INFORMATION SERVICE, U.S. GEOLOGICAL SURVEY, GOLDEN, CO
11. SMITHSONIAN ASTROPHYSICAL OBSERVATORY, CAMBRIDGE, MA

UNIVERSITIES/RESEARCH LABS:

12. UNIVERSITY OF TEXAS, AUSTIN, TX (LASER RANGING)
13. MIT, CABRIDGE, MA (VLBI)
14. HAYSTACK, OBSERVATORY, WESTFORD, MA (VLBI)
15. CALIFORNIA INSTITUTE OF TECHNOLOGY, PASADENA, CA (CEDAR, CROSS)
16. JET PROPULSION LABORATORY/CALTECH, PASADENA, CA (BLOCK I, BLOCK 2)
17. UNIVERSITY OF MARYLAND, COLLEGE PARK, MD
18. UNIVERSITY OF CALIFORNIA (SAN DIEGO), LA JOLLA, CA

Figure 6-1 (Contd). Overall Layout of the Recommended Crustal Dynamics Information Management Network (CDIMN).

the ICSU, nonetheless little data exchange transpires between the disciplinary centers belonging to the World Data Center A. Because of the increasingly interdisciplinary nature of crustal dynamics studies, the exchange of data between these disciplinary World Data Center A's is required [ICSU 73, GRB Data Committee 79]. Because the World Data Center A for Recent Movements of the Earth's Crust, as well as many other relevant disciplines, is located at EDIS, it is natural that this data center be designated as the primary node of the CDIMN. The NASA role in the CDIMN, detailed below, is supportive in nature, providing data, information, indices, and network development.

The authors recommend that, in accordance with the general user requirement that a CDIMN be administered by geophysicists, the CDIMN should receive overall direction from the ICSU Panel on the World Data Centers, under policies drawn up by the Geophysics Research Board (GRB) of the National Academy of Sciences (NAS). The GRB will be responsible for coordinating the implementation efforts of the participating government agencies and academic institutions, subject to the established policies for World Data Centers developed by the ICSU Panel on World Data Centers [ICSU 73]. The suggested role of each agency and institution, to be detailed in an interagency agreement, is briefly outlined in the following section.

6.2 SPECIFIC RECOMMENDATIONS BY AGENCY/INSTITUTION

Numerous governmental agencies and academic institutions should participate in the development and operation of the CDIMN. The participating institutions should include: the Panel on World Data Centers of the International Council of Scientific Unions; the Geophysics Research Board of the National Academy of Sciences; the Environmental Data and Information Service and the National Geodetic Survey of NOAA; NASA; the U.S. Naval Observatory, Naval Research Labs and Defense Mapping Agency of the Department of Defense; The U.S. Geological Survey of the Department of the Interior; the Haystack Observatory; the Massachusetts Institute of Technology; the Jet Propulsion Laboratory and Seismological Laboratory of the California Institute of Technology; and various other universities which collect geophysical data under government contracts. This list is by no means exhaustive. The roles of some of these representative participants is outlined briefly below.

6.2.1 PANEL ON WORLD DATA CENTERS, ICSU

The ICSU will be responsible for extending its policies concerning the exchange of geophysical data to cover the CDIMN's expansion of capabilities beyond those of the World Data Centers. These policies could be drawn up by the Geophysics Research Board of the National Academy of Sciences (see below) for recommendation to the Panel on World Data Centers of the ICSU.

6.2.2 GEOPHYSICS RESEARCH BOARD, NATIONAL ACADEMY OF SCIENCES

The GRB of the NAS will be responsible for coordinating the implementation of a CDIMN by the various participants, subject to the

policies established by the ICSU. The GRB will draw up detailed policies and a master plan in the form of an interagency agreement similar to [Coordinating Plan 78], which will detail the specific roles of each participant by fiscal year. The GRB may be supported by NASA and NOAA in this role, particularly during the early development of the CDIMN. In particular, the GRB will determine the standards for geophysical data collection and a standardized interface for the exchange of data between World Data Center A disciplinary installations. Specifically, it is recommended that the GRB adapt standards for machine-readable documentation of datasets and for the datasets themselves based upon card format (80-character records with stated block size), as the most widely used and understood format despite its obvious inefficiencies.

6.2.3 ENVIRONMENTAL DATA AND INFORMATION SERVICE, NOAA

The Environmental Data and Information Service (EDIS) of NOAA, as the primary node in the network, will have the responsibility for implementing data and information structures that will facilitate the cataloging and exchange of data throughout the CDIMN. Specifically, this responsibility includes:

- The expansion and maintenance of the ENDEX/OASIS system [ENDEX 76] into a more extensive, computerized catalog of geophysical data and information available throughout the CDIMN, as per the user requirement in Section 5.

- The provision for accessing this catalog by remote, dial-up terminals for handling updates of the catalog by data producers, and complex information retrieval requests by data users. These terminals will connect the EDIS at a minimum to the other relevant World Data Center A's at the National Space Science Data Center and the U.S. Naval Observatory, as well as the National Geodetic Survey, the National Earthquake Information Service, and the Menlo Park installation of the USGS.

- Upgrade the catalog functions and the CDIMN telecommunications capabilities as necessary to satisfy expanded user requirements, including the eventual transfer of datasets directly by dial-up telephone lines (see Section 6.3).

6.2.4 NASA

As a major motivator for the development of a CDIMN, and as the operator of the World Data Center A for Rockets and Satellites, NASA will have a significant role in the CDIMN. Its major interface with the CDIMN will be through its National Space Science Data Center in Greenbelt, Maryland. The NSSDC is an appropriate repository for space-derived crustal dynamics data, and already contains a significant proportion of this data. Therefore, the authors recommend that NASA support the CDIMN in the following ways:

- Establish a routine flow of data derived from the Goddard Space Flight Center VLBI database, JPL Block II System, and the various mobile laser-ranging and VLBI (including GPS) data acquisition systems, to the NSSDC.

- Integrate these VLBI and GPS data with the laser ranging data currently resident in the NSSDC.

- Develop and update catalog entries for the VLBI, GPS and laser ranging data, as well as other related datasets, via the terminal link(s) to EDIS.

- Provide an interface to the standardized CDIMN interface established by the GRB, to permit the eventual direct transfer of raw as well as processed data to other nodes of the network (especially to NGS and the U.S. Naval Observatory).

- Sponsor one or more Coordinated Data Analysis Workshops (CDAW, see Section 5.2) on the topic of recent crustal movements, in conjunction with the Crustal Dynamics Project of NASA, to assess the utility of integrating multiple data types. At a minimum, these types should include changes of horizontal distances, altitude, gravity, tilt, earth strain, and mean sea level, along with seismic parameters, for a specific region and time period. This will necessitate the participation by investigators from NASA, NGS, EDIS, and USGS, as well as affiliated academic researchers.

6.2.5 U.S. NAVAL OBSERVATORY, DEPARTMENT OF DEFENSE

As the third major (World Data Center A) node in the CDIMN, the U.S. Naval Observatory will have the following responsibilities:

- Development and updating of catalog entries pertaining to its UT1 and polar motion data via the terminal link to EDIS.

- Develop an interface with the CDIMN standard interface in order to receive and send UT1 and polar motion data, primarily from the NSSDC and NGS nodes.

- Integrate data and information pertaining to the rotation of the earth received from other nodes of the CDIMN, particularly the NSSDC and NGS nodes.

6.2.6 NATIONAL GEODETIC SURVEY, NOAA

The NGS will have responsibility for the following functions:

- Develop and update catalog entries pertaining to its geodetic database via its terminal link to EDIS.

- Develop an interface with the CDIMN standard interface in order to accept and distribute space-derived geodetic data, especially from the NASA node, as well as conventionally derived geodetic data.

- Develop programs to integrate space-derived and conventionally-derived geodetic data, particularly the conversion from inertial to/from latitude/longitude frames of reference.

6.2.7 U.S. GEOLOGICAL SURVEY

The USGS will tie into the CDIMN at at least two locations: the National Earthquake Information Service (NEIS) in Denver, Colorado, and the Menlo Park, California site. Its primary responsibilities are:

- Develop and update catalog entries pointing to seismic event catalogs, both global and regional, via its terminal links to EDIS. Such entries should be directly derivable from earthquake summaries currently prepared by the NEIS, USGS Menlo Park, and from those of affiliated universities such as Caltech's computer-prepared earthquake summary [SCARLET 79].

- Develop and update entries pertaining to other geophysical datasets collected by the USGS and affiliated universities, such as tiltmeter, gravimeter, and other potential earthquake precursory data types (see Appendix A.4), particularly those now implemented on GEOLAB.

- Develop an interface with the CDIMN standard interface for GEOLAB compatible machines at the USGS and USGS-supported universities, and provide that interfacing software to universities which implement GEOLAB.

6.2.8 DEFENSE MAPPING AGENCY, DEPARTMENT OF DEFENSE

The CDIMN will facilitate distribution of unclassified gravity data collected by the Defense Mapping Agency (DMA), which is now sent to EDIS for distribution. The DMA will have responsibility for:

- Developing and updating catalog entries pertaining to its unclassified gravity database via its terminal link to EDIS.

- Providing an interface with the CDIMN standard interface in order to interchange gravity and related data with other CDIMN databases.

- Integrating unclassified gravity data collected by the DMA and other organizations with other geodetic and

geophysical data types relevant to its charter for supporting current and projected weapons systems. In particular, integration of the gravity and geodetic data will help to validate data, detect changes, and isolate other anomalies.

- o Continue to compile and distribute information derived from its capabilities in mapping, charting, and geodesy.

The DMA is also expected to be a prime user of geodetic, UT1, polar motion, and other data related to the size and shape of the earth and earth motion parameters.

6.2.9 NAVAL SURFACE WEAPONS CENTER AND NAVAL RESEARCH LABORATORY, DEPARTMENT OF DEFENSE

Coordinating its work with the U.S. Naval Observatory and the Defense Mapping Agency, the Naval Surface Weapons Center and Naval Research Laboratory will also need to develop an interface with the CDIMN standard interface, in order to interchange geophysical data with these and other agencies. Naturally, it will provide CDIMN catalog entries for any geophysical data within its database.

6.2.10 SEISMOLOGICAL LABORATORY, CALIFORNIA INSTITUTE OF TECHNOLOGY

Information exchanged through the CDIMN will facilitate continuing joint research efforts between the Seismological Laboratory and the USGS. Specific responsibilities for the Seismological Laboratory include:

- o Developing and updating catalog entries for its seismic and non-seismic data sets, particularly those digitized in the CEDAR and CROSS systems, respectively, in conjunction with the USGS.
- o Develop an interface with the CDIMN standard interface in order to provide data directly from the CEDAR and CROSS systems.
- o Integrate and compare seismic, geodetic, gravity, and other data types pertaining to earthquake prediction.

6.2.11 JET PROPULSION LABORATORY, CALIFORNIA INSTITUTION OF TECHNOLOGY

Information exchanged through the CDIMN will facilitate the exchange and intercomparison of VLBI and laser ranging data in support of the Crustal Dynamics Project. The specific responsibilities for JPL are:

- o Develop and update catalog entries for its database derived from VLBI and laser ranging observations via its terminal link to EDIS.

- Develop an interface with the CDIMN standard interface in order to interchange this data with other CDIMN institutions. In particular, this should include interchanging data with the Crustal Dynamics Project, the NSSDC, and UT1 and polar motion data with the U.S. Naval Observatory.

6.2.12 HAYSTACK OBSERVATORY AND MASSACHUSETTS INSTITUTE OF TECHNOLOGY

Through their working relationship with the Goddard Space Flight Center, these two institutions would be indirectly linked to the CDIMN through the existing exchange with the Crustal Dynamics Project at GSFC. However, it is likely at some point that they would prefer to access the CDIMN directly via their own terminal link to the primary node at EDIS. This would necessitate, as with all other nodes, the development of CDIMN catalog entries for their data bases and an interface compatible with the CDIMN standard interface.

6.2.13 SMITHSONIAN ASTROPHYSICAL OBSERVATORY

The Smithsonian Astrophysical Observatory would develop CDIMN catalog entries for its data base and an interface compatible with the CDIMN standard interface in order to facilitate the exchange of laser ranging data with the NSSDC and with laser ranging investigators.

6.2.14 UNIVERSITY OF TEXAS (AUSTIN, TX)

The University of Texas would also develop CDIMN catalog entries and an interface compatible with the CDIMN standard interface in order to facilitate the exchange of laser ranging data with the NSSDC and with laser ranging investigators.

6.3 PHASED IMPLEMENTATION SCHEDULE

A phased implementation of the CDIMN is recommended. This will permit orderly growth of the CDIMN, making use of interagency and incremental funding, in order to spread out developmental costs. It will also allow the logical expansion of the system's scope as user demands evolve with the technology, rather than attempting to second-guess what all potential CDIMN participants might need.

The kernel about which the CDIMN will grow will be a computerized catalog of extant geodetic, seismic, gravimetric, and related geophysical data types, as per the user requirement given in Section 5. It is imperative that such a catalog be implemented using a generalized database management system with a powerful interactive query language, in order that this catalog can grow and evolve to meet changing user requirements, without substantial software development. By ensuring this flexibility, the catalog can eventually evolve into a directory pointing to or accessing the data required.

Three major phases are envisioned:

Phase I.

In the first phase, the CDIMN would generate a computerized catalog consisting primarily of information about data. The computerized catalog will be established at EDIS as per the user requirements established in Section 5. Unlike bibliographic indices, this catalog will index by concept all of the relevant databases, rather than articles in the literature. Initial parameters for each geophysical data set will include pointers to their current location, principal investigator responsible for data collection, who to contact, format, etc. Access to, and updating of, the catalog will be via one or more dial-up terminals located at each institution participating in the CDIMN. This will necessitate the establishment of CDIMN standards and protocols which may be expanded in Phase II. This phase of the CDIMN will resemble an expanded version of the existing ENDEX database maintained by EDIS [ENDEX 76], and could also draw from the global atlas of different geophysical data types prepared by scientists at the Goddard Space Flight Center [Lowman 79].

During this phase, NASA would commence a routine input and integration of the VLBI baselines, UT1, and polar motion data with the laser-ranging data already being received. Concurrently, CDAW(s) should be held in conjunction with the NGS, EDIS, Department of Defense, NSF, and other potential CDIMN participants. A directory for the database supporting the CDAW should draw on and contribute to the CDIMN catalog. By the end of Phase I, routine communication of information about geophysical data and a standardized CDIMN interface will have been established, procedures for updating and clearing the catalog will be operational, and an initial cadre of relevant data types will have been scoped.

Phase II

The second phase of CDIMN development will augment the catalog with additional features as required by users. Potential additions to the entries of the catalog describing each data file include abstracts describing the data, raw data excerpts, references to bibliographic sources utilizing the data set, and inventories of who has requested and received copies of the data. Additional services provided by the CDIMN might include selective dissemination of information to individuals, and a listing of on-going or recently completed (i.e., pre-publication) governmental or non-governmental research. The increasing amount of data exchange during this phase might necessitate the expansion of the standardized CDIMN data interfaces, and its implementation by the participants. By the completion of this phase, the catalog would be fully operational at all participating institutions, operational data such as UT1 and polar motion data would be routinely exchanged via the CDIMN, and the CDIMN would be the recognized source for locating and ordering copies of geophysical data in a batch mode exchange.

Phase III

In the third and final phase of CDIMN development, increased awareness by the research community of the available data sets through the CDIMN may have generated sufficient demand for certain data sets that near-real-time, direct computer-to-computer data set exchange would be required. As research requirements evolve into operational requirements, and as traffic or time requirements dictate, the CDIMN could facilitate automatic location and transfer of information required by a user through its standardized interface which was previously established. The CDIMN could thus become a clearinghouse mechanism for the data and information itself as well as information pointing to these data sets, and an enforcer of any protection constraints during a proprietary data use period. At this point, programs for processing and analyzing data could also be exchanged, particularly those for routine data manipulation and mapping and those for modeling and analysis using accepted algorithms.

SECTION 7

BIBLIOGRAPHY

Agatson 79 — Agatson, Robert, Atlantic Richfield Company, Dallas, TX, Personal Communication, 26 February 79.

Agnew 78 — Agnew, D., University of California San Diego, La Jolla, CA, Personal Communication, 24 August 1978.

Aki 79 — Aki, Keiiti, Massachusetts Institute of Technology, Personal Communication, 5 February 1979.

Alexander 77 — Alexander, George, "Massive 3-Month Study of Palmdale Bulge Planned," Los Angeles Times, 27 December 1977, pp. 3, 25.

Alexander 79 — Alexander, George, "'Seismic Gap' May Point to Big Quake," Los Angeles Times, 17 March 79, Part II, pp. 1, 12.

Alger 78 — Alger, David E., Jr., "Implementation of the National Geodetic Survey Data Base", Proceedings of the Second International Symposium on Problems Related to the Redefinition of North American Geodetic Networks, Arlington, VA, 24-28 April 1978, National Geodetic Survey (NOAA), Rockville, MD, pp. 247-257.

Alger 79 — Alger, David E. Jr., National Geodetic Survey, NOAA, Rockville, MD, Personal Communication, 16 February, 7 March, and 30 May 1979.

Anderle 78 — Anderle, R. J., "Application of Global Positioning System to Determinatin of Tectonic Plate Movements and Crustal Deformations", Applications of Geodesy to Geodynamics, Procs. of Ninth Geodesy/Solid Earth and Ocean Physics (GEOP) Research Conf., Ivan I. Mueller, ed., Ohio State Univ., 2-5 October 1978, pp. 53-58.

Anderle 79 — Anderle, Richard J., Naval Surface Weapons Center, Dahlgren, VA, Personal Communication, 24 May 1979.

Arnold 79 — Arnold, Edward P., National Earthquake Information Service, USGS, Denver, CO, Personal Communication, 30 July 1979.

Bender 79 — Bender, Peter L., Joint Institute for Laboratory Astrophysics, University of Colorado and National Bureau of Standards, Boulder, CO, Personal Communication, 24 May and 1 June 1979.

Blandford 78 — Blandford, Robert, Teledyne Geotech, Alexandria, VA, Personal Communication, 21 August 1978.

Boal 76 — Boal, J. D. and Kauba, J. "The Canadian Doppler Satellite Network", Proc. of the International Geodetic Symposium on Satellite Doppler Positioning, Las Cruces, NM, 12-14 October 1976, pp 187-206.

Bonatti 78 — Bonatti, Enrico, "The Origin of Metal Deposits in the Oceanic Lithosphere", Scientific American 238, 2 (February 78), pp. 54-61.

Bossler 78 — Bossler, John, "Regional Elevation and Gravity Changes in the Palmdale Bulge Area", Presented at 1978 Fall Meeting of the American Geophysical Union, San Francisco, CA, 5 December 1978.

Brown 79 — Brown, Duane C., Geodetic Services Inc., Indiatlantic, Florida, Personal Communication, 2 March 1979.

Carroll 79 — Carroll, Dennis G., An Examination of the Objectives of the National Geodetic Survey Data Base (Draft), National Geodetic Survey, NOAA, Rockville, MD, July 1979.

Carter 78 — Carter, William E., Robertson, D.S., and Abell, M.D., "An Improved Polar Motion and Earth Rotation Monitoring Service Using Radio Interferometry", Presented at IAU Symposium, Cadiz, Spain, May 1978.

Carter 79 — Carter, William E., National Geodetic Survey, NOAA, Rockville, MD, Personal Communication, 25 January 1979.

Chinnery 78 — Chinnery, Michael A., Lincoln Laboratory, MIT, Cambridge, MA, Personal Communication, 18 August 1978.

Coates 79 — Coates, Robert J., Goddard Space Flight Center, NASA, Greenbelt, MD, Personal Communication, 30 May 1979.

Colombo 79 — Colombo, Oscar L., "A World Vertical Network", Paper presented at the 1979 Spring Meeting of the American Geophysical Union, Washington, DC, 1 June 1979.

Coordination Plan 78 — Interagency Coordination Plan For Development and Applications of Astronomic Radio Interferometry For Geophysical Sciences, October, 1978.

Corliss 79 — "Submarine Thermal Springs on the Galapagos Rift", Science 203, 4385 (16 March 1979), pp. 1073-1075.

Counselman 78 — Counselman, Charles C. III, and Shapiro, Irwin I., "Miniature Interferometric Terminals for Earth Surveying," Applications of Geodesy to Geodynamics, Procs. of Ninth Geodesy/Solid Earth and Ocean Physics (GEOP) Research Conf., Ivan I. Mueller, ed., Ohio State Univ., 2-5 October 1978., pp. 65-85.

Counselman 79 — Counselman, Charles C. III, and Shapiro, Irwin I., "Miniature Interferometric Terminals for Earth Surveying" Proc. of the Second International Geodetic Symposium on Satellite Doppler Positioning, Austin, Texas, 22-26 January 1979.

Crustal Dynamics Plan 79 — Application of Space Technology to Crustal Dynamics and Earthquake Research (Draft), Office of Space and Terrestrial Applications, NASA, August 1979.

Davis 79 — Davis, James F., Division of Mines and Geology, Sacramento, CA, Personal Communication, 6 February 1979.

DBMS Panel 79 — Data Base Management Systems Panel Workshop: Executive Summary, JPL Publication 79-70, Jet Propulsion Laboratory, Pasadena, CA, 1 August 1979, 14 pp.

Dorin 77 — Dorin, R. H. and Eastlake, D.E., "Use of the Datacomputer in the Vela Seismological Network," Procs. of IEEE Intl. Symp. of Computer Aided Seismic Analysis and Discrimination, June 1977, pp. 33-39.

Eastlake 77 — Eastlake, D. E., "Tertiary Memory Access and Performance in the Datacomputer", Proc. of the Third Intl. Conf. on Very Large Databases, Tokyo, Japan, 6-8 October 1977, 77CH1268-2C, IEEE, New York, NY, pp. 259-267.

ENDEX 76 — User's Guide to ENDEX/OASIS: Environmental Data Index and the Oceanic and Atmospheric Scientific Information System, Environmental Data & Information Service, NOAA, Washington, DC, January, 1976, 67 pp.

Engdahl 77 — Engdahl, E. R., Report by Panel on Seismic Data Systems, USGS, Golden, CO, November 1977.

Engdahl 78 — Engdahl, E. R., USGS, Golden CO, Personal Communication, 22 August 1978.

EOS 79 — "Preliminary Report on Data Acquired by Instituto Ingeneria and IIMAS for the November 29 Puerto Angel Earthquake", EOS 60 (February 1979).

Fanselow 78 — Fanselow, Jack, Jet Propulsion Laboratory, Pasadena, CA, Personal Communication, 28 November 1978.

Fischetti 79 — Fischetti, Thomas L., Geodynamics Branch, NASA, Washington, DC, Personal Communication, 23 January 1979.

Frey 79 — Frey, Herbert, "Global Geophysics and Geology: Correlations of Satellite-Derived Gravity and Magnetic Anomalies with Rifts and Sutures", paper presented at the 1979 Spring Meeting of the American Geophysical Union, Washington, DC, 1 June 1979.

Geodynamics Program 78 — NASA Geodynamics Program. Subprogram Plans, Revised, NASA, Washington, DC, April 1978.

Geodynamics Program 79 — Geodynamics Program Research Plan, NASA Office of Space and Terrestrial Applications, Washington, DC, March 1979, 23 pp.

GRB Data Committee 76 — Geophysical Data Centers: Impact of Data - Intensive Programs, Geophysical Data Panel, Committee on Data Interchange and Data Centers, Geophysics Research Board, NRC, National Academy of Sciences, Washington, DC, 1976, 32 pp.

GRB Data Committee 79 — Geophysical Data Interchange Assessment 1978, Committee on Data Interchange and Data Centers, Geophysics Research Board, NRC, National Academy of Sciences, Washington, DC, 1979, 70 pp.

Hager 79 — Hager, Bradford H., and O'Connell, Richard J., "Kinematic Models of Large-Scale Flow in the Earth's Mantle", Journal of Geophysical Research 84, B3 (10 March 1979), pp. 1031-1048.

Harrison 79 — Harrison, J. C., Cooperative Institute for Research in Environmental Science, Univ. Colorado/NOAA, Boulder, CO, Personal Communication, 25 May 1979.

Herriot 76 — Herriot, James W., "GEOLAB Geophysical Data System", USGS, Menlo Park, CA, 30 June 1976.

Herriot 78 — Herriot, James W., USGS, Menlo Park, CA, Personal Communication, 11 September and 8 December 1978.

Hittel 79 — Hittel, Alexander, "Monitoring of Arctic Ice Movements Utilizing Satellite Doppler Methods," Proc. of 2nd Intl. Geodetic Symp. on Satellite Doppler Positioning, Austin, TX, 22-26 Jan. 79.

Hothem 76 — Hothem, Larry D. and Strange, William E., "The National Geodetic Survey Doppler Satellite Positioning Program", Proc. of the International Geodetic Symposium on Satellite Doppler Positioning, Las Cruces, NM, 12-14 October 1976, pp. 207-228.

IAG 79 — "Comments on the Lithosphere Project", Personal Communication, International Association of Geodesy, 31 January 1979.

ICSU 73 — Panel on World Data Centres (Geophysical and Solar), International Council of Scientific Unions, "Third Consolidated Guide to International Data Exchange Through the World Data Centers", Washington, DC, December, 1973, 72 pp.

IUGG/IUGS 79 "The Lithosphere: Frontier for the 1980's", (draft), International Union of Geodesy & Geophysics and International Union of Geological Sciences, January 1979.

Jackson 79 Jackson, David D., UCLA, Personal Communication, 16 January 1979.

Jenne 75 Jenne, Roy L., Data Sets for Meteorological Research, NCAR Technical Note, NCAR-TN/1A-111, National Center for Atmospheric Research, Boulder, CO, July 1975, 194 pp.

Jenne 79 Jenne, Roy L., NCAR, Boulder, CO, Personal Communication, 24 May 1979.

Julian 78 Julian, B. R., USGS, Golden, CO, Personal Communication, 18 September 1978.

Kanamori 78 Kanamori, Hiroo, Seismological Laboratory, California Institute of Technology, Pasadena, CA, Personal Communication, 30 August 1978.

Kaula 79 Kaula, W.M., "Applications of Geodesy and Geodynamics: 1. Geodesy for Geodynamics, Progress and Problems", EOS 60, 23 (5 June 1979), pp. 484-485.

Kisslinger 79 Kisslinger, Carl, Cooperative Institute for Research in Environmental Sciences (CIRES), Boulder, CO, Personal Communication, 24 May 1979.

Lacoss 78 Lacoss, Richard, MIT, Cambridge, MA, Personal Communication, 21 August 1978.

Lander 79 Environmental Data and Information Service, NOAA, Boulder, CO, Personal Communication, 25 May 79.

Lofgren 79 Lofgren, Ben, Woodward Clyde Consultants, Personal Communication, 3 April 79.

Love 78 Love, John D., and Drosdak, James, "Positional Data - Storage Retrieval and Maintenance", Procs. of the Second International Symposium on Problems Related to the Redefinition of North American Geodetic Networks, Arlington, VA, 24-28 April, 1978, National Geodetic Survey, NOAA, Rockville, MD, pp. 259-267.

Lowman 79 Lowman, Paul D., Jr., and Frey, Herbert V., A Geophysical Atlas for Interpretation of Satellite-Derived Data, Technical Memorandum 79722, Goddard Space Flight Center, Greenbelt, MD., February 1977, 54 pp.

Luck 76 Luck, John Mc K., "Position Paper Showing Comparison with the Australian Geodetic Survey as of September,

1976", Proc. of the International Geodetic Symposium on Satellite Doppler Positioning, Las Cruces, NM, 12-14 October 1976, pp 235-244.

Ma 78 — Ma, Chopo, Very Long Baseline Interferometry Applied to Polar Motion, Relativity and Geodesy, NASA Technical Memorandum 79582, Goddard Space Flight Center, May, 1978.

Ma 79 — Ma, Chopo, Goddard Space Flight Center (NASA), Greenbelt, MD, Personal Communication, 25 January 1979.

MacDonald 76 — MacDonald, W. R., "Satellite Technology Applied to Antarctic Mapping Program", Proc. of the International Geodetic Symposium on Satellite Doppler Positioning, Las Cruces, NM, 12-14 October 1976, pp 175-185.

MacDoran 78 — MacDoran, P.F. et al., "Mobile Radio Interferometric Geodetic Systems (Summary)", Applications of Geodesy to Geodynamics Procs. of the Ninth Geodesy/Solid Earth and Ocean Physics (GEOP) Research Conf., Ivan I. Mueller, ed., Ohio State Univ., 2-5 October 1978, pp. 47-52.

MacDoran 79a — MacDoran, Peter F., "SERIES: Satellite Emission Radio Interferometric Earth Surveying", Proc. of the Second International Geodetic Symposium on Satellite Doppler Positioning, Austin, TX, 22-26 January 1979.

MacDoran 79b — MacDoran, Peter F., Jet Propulsion Laboratory, Pasadena, California, Personal Communication, 1979.

Marsh 79 — Marsh, Bruce D., "Island-Arc Volcanism", American Scientist 67 (March-April, 1979), pp. 161-172.

McGunigal 78 — McGunigal, T.E., "Laser Ranging Work at the Goddard Space Flight Center -- An Update", Procs. of Third Workshop on Laser Ranging Instrumentation, K. Hamel and M. Pearlman, eds., Lagonissi, in press, 1978, (Preprint X-723-78-22, Goddard SFC).

McLuskey 76 — McLuskey, D., "Application of Doppler Satellite Systems In Remote Regions In and Near Australia", Proc. of the International Geodetic Symposium on Satellite Doppler Positioning, Las Cruces, NM, 12-14 October 1976, pp. 229-234.

Meyers 78 — Meyers, Herbert, Environmental Data and Information Service (NOAA), Boulder, CO, Personal Communication, 6 December 1978.

NASA Intl. Plan 79 — NASA Plan for International Crustal Dynamics Studies, Geodynamics Program Office, OSTA, NASA, Washington, DC, April 1979, 32 pp.

Nickerson 79 — Nickerson, Robert, Seismological Laboratory, California Institute of Technology, Pasadena, CA, Personal Communication, 26 February 1979.

NRC Earthquake Prediction 76 — Predicting Earthquakes: A Scientific and Technical Evaluation--with Implications for Society, Panel on Earthquake Prediction (Cladrence R. Allen, Chairman), Committee on Seismologh, National Research Council, National Academy of Sciences, Washington, DC, 1976, 62 pp.

NRC Geodesy Report 78 — Geodesy: Trends and Prospects. Committee on Geodesy, Assembly of Mathematical and Physical Sciences, National Academy of Sciences, Washington, D C , 1978.

NRC GRB Data Committee 79 — Geophysical Data Interchange Assessment 1978, Committee on Data Interchange and Data Centers, Geophysics Research Board, National Research Council, National Academy of Sciences, Washington, D C , 1979, 70 pp.

NSF/USGS 76 — Earthquake Prediction and Hazard Mitigation Options for USGS and NSF Programs, NSF and USGS, U.S. Government Printing Office #038-000-00332-1, Washington, DC, 15 September 1976, 76 pp.

NSSDC 78 — NSSDC Data Listing, Report NSSDC/WDC-A-R&S 78-06, National Space Science Data Center/World Data Center A for Rockets and Satellites, Goddard Space Flight Center, NASA, Greenbelt, MD, September 1978, 34 pp.

OSTP 78 — Earthquake Hazards Reduction: Issues for an Implementation Plan, Working Group on Earthquake Hazards Reduction, Office of Science and Technology Policy, Executive Office of the President, Washington, DC, 1978, 231 pp.

Painter 79 — Painter, J. Earle, Goddard Space Flight Center, NASA, Greenbelt, MD, Personal Communication, 29 May 1979.

Pfeifer 78 — Pfeifer, Ludvik, User's Guide to the Input Formats and Specifications of the National Geodetic Survey Data Base, Volume I: Horizontal Control Data, NGS, Rockville, MD, 1 May 1978.

Press 75 — Press, F., et al. "Earthquake Research in China", Trans. of American Geophysical Union 56, 11 (Nov. 1975), pp. 838-881.

Priestly 78 — Priestly, K., Univ. of Nevada, Reno, NV, Personal Communication, August 1978.

Resch 78 — Resch, George M., Lockhart, T.G., MacDoran, P.F., and Neill, A.E., "Preliminary Results from a New 4-M High Mobility ARIES VLBI Station", Presented at 1978 Fall Meeting of the American Geophysical Union, San Francisco, CA, 7 December 1978.

Rikitake 76 — Rikitake, Tsuneji, Earthquake Prediction, American Elsevier, New York, NY, 1976, 313 pp.

Rinehart 78 — Rinehart, W., Environmental Data and Information Service, NOAA, Boulder, CO, Personal Communication, 19 September 1978.

Robertson 79 — Robertson, Douglas, National Geodetic Survey, NOAA, Rockville, MD, Personal Communication, 30 May 1979.

Rogers 79 — Rogers, A.E.E., Haystack Observatory, Westford, MA, Personal Communication, 22 January 1979.

Ryan 78 — Ryan, James W., and Ma, Chopo, "A Small Data Base Handler for Scientific Applications," Procs. Second Working Conference on Oceanographic Data Systems (Univ. Natl. Oceanographic Lab. Systems), Woods Hole Oceanographic Institute, 26-28 September 1978, pp. 330-342.

Ryan 79 — Ryan, James W., Goddard Space Flight Center, NASA, Greenbelt, MD, Personal Communication, 30 May 1979.

Safford 78 — Safford, Robert W., "Field Data Entry System", Procs. of the Second International Symposium on Problems Related to the Redefinition of North American Geodetic Networks, Arlington, VA, 24-28 April 1978, NOAA, Dept. of Commerce, pp. 291-297.

Salisbury 76 — Salisbury, D.F., "Stars May Pinpoint Earthquake Warnings", Christian Science Monitor, 8 September 1976.

Savage 79 — Savage, J.C., USGS, Personal Communication, 19 January 1979

SCARLET 79 — Whitcomb, James H. et al., Southern California Array for Research on Local Earthquakes and Teleseisms (SCARLET): Caltech-USGS Monthly Preliminary Epicenters from March 1978 to January 1979, Seismological Laboratory, California Institute of Technology, Pasadena, CA, February 1979.

Science 78 — "Tidal Waves: New Method Suggested to Improve Prediction", Science 200, (5 May 1978), pp. 521-522.

Shapiro 79 — Shapiro, Irwin I., MIT, Cambridge, MA, Personal Communication, 24 January 1979.

Silverberg 78 — Silverberg, Eric C., "Mobile Satellite Ranging," Applications of Geodesy to Geodynamics, Procs. of Ninth Geodesy/Solid Earth and Ocean Physics (GEOP) Research Conf., Ivan I. Mueller, ed., Ohio State Univ., 2-5 October 1978, pp. 41-46.

Silverberg 79b — Silverberg, Eric C., University of Texas, Austin, TX, Personal Communication, 26 February 1979.

Shelus 79 — Shelus, Peter J., "Lunar Laser Ranging Data Deposited in the National Space Science Data Center Normal Points, Filtered Observations, and Unfiltered Photon Detections for 1 Janunary 1979 through 30 June 1979," University of Texas at Austin, Research Memorandum in Astronomy, October 1979.

Smith 78 — Smith, David E., "Spaceborne Ranging System," Applications of Geodesy to Geodynamics, Procs. of Ninth Geodesy/Solid Earth and Ocean Physics (GEOP) Research Conf., Ivan I. Mueller, ed., Ohio State Univ., 2-5 October 1978, pp. 59-64.

Smith 79a — Smith, David E., Geodynamics Branch, Goddard Space Flight Center (NASA), Greenbelt, MD, Personal Communication, 24 January and 28 December 1979.

Smith 79b — Smith, John R., Jet Propulsion Laboratory, Pasadena, CA, Personal Communication, 9 April 1979.

Spall 79 — Spall, Henry, "Space Techniques for Measuring Crustal Deformation", Earthquake Information Bulletin, Jan.-Feb. 1979, pp. 9-17.

Specht 79 — Specht, Robert N., Atlantic Richfield Company, Dallas, TX, Personal Communication, 6 March 1979.

Stewart 77 — Stewart, Sam W., "Real-time Detection and Location of Local Seismic Events in Central California", Bulletin of Seismological Society of America 67, 2 (April 1977), pp. 433-452.

Stewart 78 — Stewart, Sam W., USGS, Menlo Park, CA, Personal Communication, 19 September 1978.

Stutes 79 — Stutes, Philip, "Use of Satellite Doppler Techniques to Position Movable Offshore Drilling Platforms", Proc. of 2nd Intl. Geodetic Symp. on Satellite Doppler Positioning, Austin, TX, 22-26 January 1979.

Tapley 79 — Tapley, B. D. and Smith, David E., Report of Spaceborne Geodynamics Ranging System Workshop, Institute for Advanced Study in Orbit Mechanics, Report No. TR79-3, Department of Aerospace Engineering and Engineering Mechanics, University of Texas, Austin, TX, 10 March 1979.

Tar 78 — Tar, A., USGS, Golden, CO, Personal Communication, 18 September 1978.

Teng 77 — Teng, T-L, Earthquake Prediction and Geophysical Data Processing, Procs. of 1977 Joint Automatic Control Conference, San Francisco, IEEE, New York, 1977, pp. 55-61.

Time 78 — "Exploring an Ominous Bulge", Time Magazine, 16 January 1978, p. 54.

Turcotte 79 — Turcotte, Donald L., Cornell University, Ithaca, NY, Personal Communication, 8 February 1979.

Twogood 79 — Twogood, Don, Imperial Irrigation District, Imperial, CA, Personal Communication, 3 April 1979.

Vanicek 79 — Vanicek, P., "Applications of Geodesy to Geodynamics: 5. Vertical Crustal Movements (Terrestrial Techniques)", EOS 60, 28 (10 July 1979), p. 524.

Vette 79a — Vette, James I., National Space Sciences Data Center, Goddard Space Flight Center, Greenbelt, MD, Personal Communication, 15 February, 29 June, and 6 July 1979.

Vette 79b — Vette, James I., Hei, Donald J. Jr., and Teague, Michael J., An Evolutionary Approach to the Group Analysis of Global Geophysical Data, Report No. 79-02, National Space Science Data Center/World Data Center A for Rockets and Satellites, Goddard Space Flight Center, Greenbelt, MD, May 1979, 49 pp.

Whitcomb 78 — Whitcomb, James H., Seismological Laboratory, California Institute of Technology, Pasadena, CA, Personal Communication, 1978.

Whitcomb 79 — Whitcomb, James H., "Temporal Gravity Changes Over a Five-Year Period in Southern California", Paper presented at the 1979 Spring Meeting of the American Geophysical Union, Washington, DC, 30 May 1979.

Whitten 79 — Whitten, C.A., "Applications of Geodesy to Geodynamics: 4. Horizontal Crustal Movements (Terrestrial Techniques)", EOS 60, 26 (26 June 1979).

Williams 77 — Williams, J.G., "Present Scientific Achievements From Lunar Laser Ranging", Scientific Applications of Lunar Laser Ranging, Mulholland, J. D. (Ed.), Boston, Reidel, 1977, pp 37-50.

Williams 78 — Williams, J.G., Jet Propulsion Laboratory, Pasadena, CA, Personal Communication, December 1978.

Williams 79 — Williams, Owen B., Defense Mapping Agency, U.S. Naval Observatory, Dept. of Defense, Washington, DC, Personal Communication, 1 June 1979.

Wilson 78 — Wilson, P.E. et al. "A Proposal for the Design and Application of a High-Mobility Low-Cost Satellite Laser Ranging System", Procs. of the European Workshop on Space Oceanography, Navigation, and Geodynamics, S. Hieber and T.D. Guyenne (Eds.), European Space Agency, SP-137, 1978, pp. 111-117.

World Data Center A 78 — Working Group 10b on Data Centers and Repositories, U.S. Geodynamics Committee, World Data Center A for Solid Earth Geophysics, Directory of U.S. Data Repositories Supporting the International Geodynamics Project, Report SE-14, Environmental Data and Information Service (NOAA), Boulder, CO, August 1978, 40 pp.

Young 78 — Young, K., University of California at San Diego, La Jolla, CA, Personal Communication, 24 August 1978.

APPENDIX A

DATA PRODUCERS

There are basically four space-related techniques which are used to produce geodetic data, and many ground techniques. The space techniques are microwave interferometry, laser ranging, Doppler measurements using signals from the Transit satellites, and various methods utilizing the signals from satellites of the NAVSTAR Global Positioning System (GPS). The first two techniques are capable of yielding much more precise position determinations than is the third. The third has, on the other hand, been under development for a longer period of time, and is currently acquiring measurements at densities appropriate for use in commercial applications. Brief summaries of the data-producing aspects of these four techniques are presented, and some comments are made on the more widely known data types resulting from ground measurements.

A.1 INTERFEROMETRY

Interferometric geodetic techniques are based upon the minute difference in time that it takes radio waves to reach two physically separated antennas on earth. The best known interferometric technique is very long baseline interferometry (VLBI), which uses extragalactic natural sources of radio emission (e.g., quasars). A concise introduction to VLBI technology capabilities and goals may be found in [Coordination Plan 78]. Because of the weakness of the radio signals from such distant sources, VLBI generally requires fairly sizable radio antennas, most of which are currently at fixed locations. These produce data used to improve the precision of measurement of polar motion and UT1. They can also be used to monitor crustal movement on a global or intercontinental scale but, because they are fixed, are not useful by themselves in completely measuring regional crustal deformation. Portable VLBI equipment (Project ARIES), using 9 meter and 4 meter antennas, is being developed and validated for use in measuring crustal deformations on regional scales.

Accuracies of baseline lengths are soon expected to be 2 to 4 cm over distances of 40 km to 4000 km [Coordination Plan 78]. As these techniques mature, in the 1980's, several government agencies, such as NGS and USGS, plan to use these systems in carrying out their assigned missions [Coordination Plan 78].

A.2 LASER RANGING

There are several types of laser ranging systems being used to measure geophysical quantities. "Second generation" satellite laser ranging systems with accuracies of the order of 10 cm are making range measurements to the LAGEOS satellite and to other satellites for determining crustal movements, polar motion, and changes in UT1. Such stations are located in the U.S., Europe, Peru, and Australia. LAGEOS

was placed in a nearly circular orbit with 5900 km altitude, and is quite dense in order to minimize orbit perturbations. Two "third generation" satellite laser ranging stations which use sub-nanosecond laser pulse lengths to improve the accuracy are in operation in Greenbelt, Maryland, and in Wettzell, West Germany with range accuracies of about 5 cm at present. Existing laser ranging data management systems are discussed in Appendix C.9.

NASA presently has 8 MOBLAS stations, which can visit about 4 sites per year with current operating procedures, or which can be used at fixed locations. Most of these will be upgraded to roughly 2 cm accuracy. An additional station with much higher mobility has been constructed by the University of Texas. It is expected to make measurements in two weeks or less per site, and to have roughly 2 cm accuracy [Silverberg 79b]. Research on a more compact high-mobility LAGEOS ranging station is being carried out at Goddard [McGunigal 78], and simpler high-mobility stations for ranging to STARLETTE-type satellites have been proposed [Wilson 78].

For lunar laser ranging, there are fixed sites at McDonald Observatory at Fort Davis, Texas, in Hawaii, and in Australia. Other lunar laser ranging systems are in various stages of development around the world. Four retroreflectors located on the moon are used. The Texas site makes observations on the average of 17 days per month [Crustal Dynamics Plan 79] and has been collecting data since 1969. A total of about 500 days of data which are suitable for earth rotation measurements have been collected, and the total is perhaps twice this number [Williams 78]. The other two sites have not become operational to the point where there is published data available on their operations.

A spaceborne laser ranging system, in which the laser is located in a satellite and only passive retroreflectors are needed on the ground, has been investigated theoretically by several groups, and system development studies have been carried out through the Goddard Space Flight Center [Smith 79, University of Texas 79]. The concept appears capable of giving repeat position measurements at large numbers of points with data collected over a period of about 6 days. Simulations indicate that the accuracy would be similar to that for Lageos ranging from the ground for determining local and regional baselines. No cost comparisons with the recently proposed systems using signals from the GPS satellites are available.

A.3 TRANSIT SATELLITE DOPPLER OBSERVATIONS

Transit satellite Doppler observations are in much more common use than are either of the other two space-related geodetic data-producing techniques. As the name "Doppler" suggests, the system works by measuring frequency shifts in signals emitted by the satellites and received by a receiver on the ground. One receiver can be used by itself (point positioning), and the accuracy in this situation is usually 1 to 5 meters. If two receivers are used and a baseline is established, accuracies of roughly 10 cm to 1 meter are possible, depending on baseline length. The ephemerides (orbits) of

the satellites can be obtained as "broadcast" ephemerides immediately, or as "precise" ephemerides after they are declassified and released by the Defense Mapping Agency's Topographic Center. The latter ephemerides are the more accurate. The geodetic data obtained from signals received by a receiver are usually based on between 10 and 50 satellite passes. The time for this can take from 6 to 32 hours at high latitudes and from 16 to 80 hours at the equator.

A.4 GPS SYSTEMS

There are several other instrument systems which have been proposed for making geodetic measurements using interferometric techniques. They make use of the 24 (by 1984) NAVSTAR Global Positioning System (GPS) satellites, maintained by the Department of Defense. Instead of receiving the relatively weak signals from an extragalactic source, these systems monitor the stronger signals from GPS transmissions. The SERIES system, designed by Peter MacDoran of JPL, uses two highly transportable trailers which contain the antennas and electronic gear. Over baselines less than 300 km it is expected that the short baseline vector precision, based on 80 seconds of data collection, can be 11 mm [MacDoran 79a]. The accuracy is likely to be in the range of 1-3 cm depending upon how well corrections for atmospheric water vapor are made.

The second system, the Mighty MITES system, is being proposed by Irwin Shapiro and C. C. Counselman of MIT. This system can be implemented only if an additional transmitter is placed on each of the GPS satellites. The receiving terminal can be packaged in a volume of less than .1 m^3 and can operate unattended. The anticipated accuracy for the system is the same as for the SERIES system, on baselines up to several hundred kilometers. The time needed to acquire enough information to determine a baseline is less than one second, and the processing can be done in real time. This system seems particularly well suited to extremely precise crustal movement monitoring around faults and earthquake zones, allowing for high spatial and temporal densities [Counselman 79b].

A third system involves processing the received signals from the GPS satellites to remove the coded phase shifts in the signals. Measurements of the change in phase with time of the resulting "reconstructed carrier" signals have been carried out by Anderle and co-workers at the Naval Surface Weapons Center (NSWC) using a specially developed geodetic receiver to generate the desired signals [Anderle 79]. Such Doppler measurements correspond to the fringe rate method used in radio interferometry. An alternate approach using the reconstructed carrier phase rather than the rate of change of phase has been studied theoretically at NBS, NGS, and MIT, and is expected to be demonstrated in joint MIT-Draper Labs experiments and in NSWC experiments. This approach is expected to give similar accuracy to the SERIES and MITES approaches. Simulations have shown that the ambiguities inherent in phase measurements can be resolved by observing the fringe motions over a 2 hr period at a site. Two other possible ambiguity resolution methods are: using the ranges based on the pseudo-random code and substantial averaging, or

monitoring the fringes while moving the receiver from a known location to the unknown site.

While the last two systems are still in an early stage of development and evaluation, they indicate the characteristics and cost of the instruments that will be providing geodetic measurements in the 1980's. They have the potential for providing large quantities of geodetic data having low-centimeter accuracies at reasonable costs [Bender 79].

A.5 DATA TYPES RESULTING FROM GROUND MEASUREMENTS

Almost all geodetic data which have been useful in studying crustal dynamics so far have come from ground measurements. Five terrestrial techniques that "have sufficient accuracy to give useful information for detection of crustal movements of the order of a few centimeters" are: sea level variations, repeated airborne terrain profiling, repeated gravity surveys, tilt variations, and repeated levelings [Vanicek 79]. There are numerous arrays of instruments throughout the world which measure geophysical parameters relevant to, or correlatable with, geodetic measurements. Particularly in the effort to establish reliable earthquake prediction techniques, where it is generally recognized that there does not currently exist any single precursory phenomenon that would predict earthquakes on any given fault within an acceptable accuracy range, additional types of data are vital to the meaningful interpretation and applicability of geodetic data. Other examples of the need for ground measurements are the requirement for precise gravimetric observations to augment geodetic measurements, the correlation of conventionally-derived geodetic data with astronomically-derived observations [Carter 79, Alger 79], and correlations with tide gauge and solid earth tide measurements [Harrison 79].

Appendix B lists various geophysical data collection systems in the western U.S. and a sampling of some international systems for which data were available. It is clear that the dominant data collection and processing task in any geophysical array is from the seismic instrumentation. All other geophysical instrumentation proposed or in operation is of a much lower data rate, and hence poses much less of a data storage and processing problem.

Southern California is one of the most densely monitored areas in the U.S., due largely to long-term earthquake prediction techniques which suggest that it is a prime candidate for damaging earthquakes within the next decade. Table A-1 shows the existing array of non-seismic instrumentation in Southern California today that is continuously recording, and Appendix C.5 describes two advanced geophysical data collection systems for seismic and non-seismic instruments in the Southern California region.

Northern California enjoys approximately the same density and variety of instrumentation as that which exists in southern California. This area has been the prime region of concentration for the U.S. Geological Survey's earthquake research program since about

Table A-1. Existing Low Data Rate Instrumentation (Continuous) In Southern California [Whitcomb 78]

Instrument Type	Number of Stations	Number of Components	Sample Rate	Total Samples Per Day
Tiltmeters	50	2	6/hr.	14400
Magnetometers	9	3	6/hr.	3888
Radon Monitors	10	4	6/hr.	2880
Gravimeters	3	1	3/hr.	432
Electrical Resistivity	2	1	6/hr.	288
Strain	1	4	6/hr.	576
Stress Meters	2	2	6/hr.	576
Creep Meters	7	1	6/hr.	1008
Total				24048

1965. An effort by the USGS to automatically collect, process, and distribute non-seimsic data collected throughout California is described in Appendix C.6.

These arrays and existing data collection systems within California are representative of an extensive, advanced, regional geophysical monitoring system and the plethora of low-frequency geophysical data types likely to be measured during the next decade in any potentially active tectonic area. For an example of a global network, which utilizes the Department of Defense ARPA net, see the NEP network in Appendix B. For an introduction to the characteristics and the use of each data type as a potential precursor for earthquake prediction, see [Rikitake 76], [NRC Earthquake Prediction 76], and [Crustal Dynamics Plan 79].

In addition to the continuously recording, automatically collected instrumentation, there are extensive data sets from non-continuous measurements. Among these are the entire spectrum of measurements from leveling and horizontal surveys, local strain and leveling nets, as well as water well monitoring, radon monitoring, creep meters, and others. Besides these standard geophysical parameters, individual researchers are likely to require additional data types relevant only to their own research. Hence, it is impossible to anticipate all additional data that could be entered from various sources into the CDIMN. The primary emphasis must be upon flexibility to accept any reasonable data type.

A.6 A CLASSIFICATION OF DATA TYPES

It is enlightening to classify the possible types of geophysical data, largely based on exemplary data sets suggested by researchers that were contacted by the authors. What follows is an

attempt to identify major characteristics--such as quantity, rate of acquisition, and attributes--of those classes of data types, listed within its class in order of priority that contributors placed upon each example.

The first class is the set of data types whose observations may vary both in space and in time. The most prominent example of this data type is geodetic points or baselines. Horizontal and vertical geodetic control stations currently number about 670,000 first-, second-, and third-order points. New or updated measurements are being accumulated irregularly by conventional ground measurements at an approximate rate of 10% per year for horizontal control points, and an even greater rate for vertical benchmarks [Alger 79]. In addition, several localized horizontal control surveys, which have been made to support engineering activities, are available. For example, the horizontal control network of Los Angeles County covers a time span of over 50 years with many repeated surveys, including an extensive resurvey after the San Fernando earthquake of 1971 [Whitten 79]. An NGS assessment has estimated the total number of points presently available from all sources to be 2.15 million, and by 1990 to be 3 million [Carroll 79]. Attributes deemed relevant to current and projected users include some unique station identifier; location information such as latitude, longitude, containing county and state, and textual descriptors of geographic location relative to local landmarks; multiple observations of angle and distance to identifiable geographical points (about 10-20 per station); indicators of the technique used to measure that point; the exact time that the measurement was taken; and an accuracy attribute, which currently is a number indicating the accuracy class within which the measurement falls, but in the future could be more specific (e.g., a root mean square error).

The second class of data types is georeferenced data types. These data types are characterized by their variation over the three dimensions of space, with usually only one measurement over time. The most obvious and necessary example of georeferenced information relevant to geodetic measurements are maps of tectonic plates, faults, and other relevant geological formations. These may take the form of points, lines, surfaces, polygons, or image pixels. The maps may be two- or three-dimensional in nature, and would vary in scale from global to local. Next in priority would be the parameters of individual seismic events, which may be referenced by the latitude and longitude of the epicenter and the focal depth of the event. Other attributes of these points might include: geographic description (e.g., nearest city); date and time of occurrence; magnitude and the intensity scale on which it was measured; duration; and for each of the recording seismographic stations, the arrival times of P and S waves and other phases, first motion, and other information required by seismologists. The quantity of these data extant to date is unknown, although seismic activity in Southern California alone numbers 500 to 600 detectable events per year [Whitcomb 78]. Furthermore, with the exception of seismic parameters, the great majority of these data are not currently in machine-readable form.

Time series data types make up the third and final class of data types. These types are characterized by multiple observations over time (with the initiation of measurement occurring at either random or specified intervals) at a single point location that is essentially fixed or semi-fixed (e.g., portable instruments) during the period of observation. The leading examples of time series data types are of the sequences of observations taken by long-period and short-period geophysical instruments, described in Appendix A.5 above. Meteorological data such as temperature, barometric pressure, and possibly humidity, are sometimes required for calibration of instruments. Sample rates usually range from 1 to 10 minutes per sample [Whitcomb 78, Herriot 78.] In particular, measurements from gravimeters are complementary to geodetic measurements that are measured at the same point. U.S. gravity stations number approximately 500,000 [Carroll 79].

Digitized seismic wave forms are examples of time series having a much higher sample rate, and hence a much larger volume of data. The analog signals from seismographic stations are digitized at 50 to 100 samples per second in random spurts dictated by the occurrence of the earthquake. Digitized seismic wave form data for Southern California alone accumulate at the rate of approximately 150 magnetic tapes per year. However, seismic wave form data are not envisioned to be part of the CDIMN.

The standard format for time-series data usually has one record for each instrument component and the attributes of that component, instrument, and/or site stored and cross-indexed on on-line memory. This record then has pointers to the location of the observations for that station, which are arranged in a time series and stored in off-line storage (see, for example, Appendices C.5 and C.6). For sufficiently slow data rates, the time series is sufficiently small that it can also be stored on on-line storage media [Nickerson 79].

APPENDIX B

MAJOR EXISTING AUTOMATED GEOPHYSICAL DATA COLLECTION EFFORTS

NAME	IMPLEMENTER	SPONSOR	AREA SERVED	SENSORS			DESCRIPTION, COMMENTS, PROCESSING, HARDWARE, ETC.	REFERENCE(S)
				TYPE(S)	NUMBER	SAMPLE RATE		
NEP (Network Event Processor)	Teledyne Geotech Alexandria, VA (Bob Blandford); and Computer Corp. of America, Cambridge, MA	Nuclear Monitoring Office, ARPA, DOD	Worldwide Velanet: Alaska, Wyoming, Albuquerque, CPO (Tennessee), British Array Ntwk (Canada) NORSAR (Norway)	Seismic	100-150 (300 channels total, 40 channels real-time)	1-20 Hz.	Intended primarily to discriminate nuclear tests; real-time detection on redundant IBM 360/40's; graphics on PDP11/35; linked to ARPA net, and DATA COMPUTER's Ampex Terabit Memory (TBM), via special switching/telecom processor.	Blandford 78 Chinnery 78, Dorin 77, Eastlake 77, Lacoss 78
SEDAS (Seismic Data Analysis System)	Global Seismology Branch, USGS, Golden, CO (Bruce Julian)	Global Seis. Branch, USGS, Golden, CO (Bob Engdahl)	Worldwide	Tele-Seismic	1500 - 2000 stations (100 on-line)	1 Hz. to 1/ event	Under development: data entry began Sept. 78; mostly parameters of events, for preparation of Earthquake Bulletin by National Earthquake Information Service (NEIS), using Honeywell computer (MULTICS operating system) and MERGE relational data management system; waveforms not yet integrated.	Engdahl 78, Julian 78

APPENDIX B

MAJOR EXISTING AUTOMATED GEOPHYSICAL DATA COLLECTION EFFORTS

NAME	IMPLEMENTER	SPONSOR	AREA SERVED	SENSORS			DESCRIPTION, COMMENTS, PROCESSING, HARDWARE, ETC.	REFERENCE(S)
				TYPE(S)	NUMBER	SAMPLE RATE		
CEDAR	Caltech, Pasadena, CA (Carl Johnson)	Caltech/ USGS (Menlo Park)	Southern Calif.	Seismic only	150	50 Hz.	On-line, real-time event detection; events only retained; operational since 1 Jan. 77.	Engdahl 77, Whitcomb 78
CROSS	Caltech, Pasadena, CA (Robert Nickerson)	Caltech/USGS (Menlo Park)	Southern Calif.	Non-seismic	5 units (8 channels) Max. 14 units in future	1/300 Hz.	I/O via dial-up TIM's; operational since April 78.	Nickerson 79
GEOLAB	USGS, Menlo Park, CA (James Herriot)	USGS	Primarily N. Calif., 1/3 in S. Calif., some in central Calif.	Non-seismic (tilt, strain, inclinometers, magnetometers)	500	1/600 Hz. (magnetometer= 1/60 Hz.)	12 bits/sample; began in mid '73 with 6 instrumer s at Lawrence Berkeley Lab's CDC-7600; now at USGS on MULTICS; all off-line data collection via tape; now has 50M samples, since 1970.	Herriot 76, Herriot 78
	USGS, Menlo Park, CA (Sam Stewart)	USGS	Central Calif., Oroville	Seismic	108	50 Hz.	To be integrated with GEOLAB this year; off-line data collection via analog tape; currently has 50K to 100K traces; 5K traces/yr. Automatic location of earthquakes within 1-2 mins. of occurrence.	Herriot 78, Stewart 77, Stewart 78

APPENDIX B

MAJOR EXISTING AUTOMATED GEOPHYSICAL DATA COLLECTION EFFORTS

NAME	IMPLEMENTER	SPONSOR	AREA SERVED	SENSORS			DESCRIPTION, COMMENTS, PROCESSING, HARDWARE, ETC.	REFERENCE(S)
				TYPE(S)	NUMBER	SAMPLE RATE		
SNAPS (Seismic Network Analysis & Processing System)	Earthquake Tectonics Branch, USGS, Golden, CO (Art Tar)	Earthquake Tectonics Branch USGS, Golden, CO	South Carolina, Puerto Rico, & portables	Seismic	50 (including 15 portables)	Analog, 1/event	Older system (1974) to find hypocenters and to provide standard format for statistics and interactive plotting; built around HYPO71 module.	Engdahl 78, Tarr 78
	U.C.Berkeley, Berkeley, CA (Tom McEvilly)	NSF	Northern Calif.	Seismic	108 (max.)	50 Hz.	Analog and digital recording; interactive mathematical and statistical processing on MODCOMP computer.	Engdahl 77
	Univ. of Utah	USGS, State of Utah, NSF, DOE, and Bureau of Reclamation	Wasatch Mtns., Central & Southern Utah, Idaho	Seismic	59 (73 channels)	Analog 1/event	Currently develocorder only, at approx. 1500 events/month. Digital system proposed.	Engdahl 77
	Univ. of Nevada, Reno, NV	USGS, ARPA NSF	Northern Nevada Mono Lake	Seismic Strain-meter & environ.	35 1 (6 channels)	Analog punched to cards 11 Hz.	Off-line collection, processed on campus CDC 6400	Engdahl 77, Priestly 78

APPENDIX B

MAJOR EXISTING AUTOMATED GEOPHYSICAL DATA COLLECTION EFFORTS

NAME	IMPLEMENTER	SPONSOR	AREA SERVED	SENSORS			DESCRIPTION, COMMENTS, PROCESSING, HARDWARE, ETC.	REFERENCE(S)
				TYPE(S)	NUMBER	SAMPLE RATE		
Project IDA (International Deployment of Accelerometers)	U.C.S.D., San Diego, CA (Freeman Gilbert)	USGS, NASA, NSF (?)	Worldwide	Teleseismic	10	Ultra-long period	Off-line collection via cassette, for processing & archiving, then sent to Environmental Data & Information Service (EDIS, Boulder, CO) after 1 year.	Engdahl 77, Young 78, Agnew 78
Pinon Flat Observatory	U.C.S.D., San Diego, CA (Freeman Gilbert)	USGS, NASA, NSF (?)	South of Palm Springs, CA	Teleseismic Strainmeter Tiltmeters Gravimeters Accelerometers	3 3 4 1 2	1/2 Hz. 1/360 Hz. 1/360 Hz. 1/2 Hz. 1/900 Hz. 1/900 Hz.	Recorded on 9-track tape, collected once per week; editing and correlations with tides, etc., by special program.	Engdahl 77, Agnew 78
	U.C.S.D., San Diego, CA	USGS, NASA NSF (?)	Southern Calif., Gulf of Calif.	Seismic (Portable)	15	300 Hz.		Engdahl 77
Adak Observatory	Cooperative Inst. for Research in Environmental Sciences (CIRES), Univ. of CO (Martin L. Smith)	USGS	Aleutian Islands, Alaska	Seismic Tilt (eventually)	18 (36 channels) 15	?	Currently film processing only, averaging 14 events/day.	Engdahl 77

APPENDIX B

MAJOR EXISTING AUTOMATED GEOPHYSICAL DATA COLLECTION EFFORTS

NAME	IMPLEMENTER	SPONSOR	AREA SERVED	SENSORS			DESCRIPTION, COMMENTS, PROCESSING, HARDWARE, ETC.	REFERENCE(S)
				TYPE(S)	NUMBER	SAMPLE RATE		
	Univ. of Wash., Seattle, WA	DOE	Washington State and British Columbia	Seismic	50	Short Period	Manual scanning of develocorder film, using Varian 620 mini.	Engdahl 77
Tsunami Warning System	U.S. Weather Services, Hawaii	U.S. Weather Service	Pacific Ocean	Tele-Seismic	30	Long Period (2 very long period)	Primary Objective: to predict tsunamis	Science 78
	St. Louis Univ.	USGS	Missouri Seismic Array, NEIS regional stations (New Madrid Seismic Zone)	Seismic	52	?	Currently all analog recording (develocorder).	Engdahl 77
	People's Republic of China	People's Republic of China	People's Republic of China	Varied, unknown, unconventional	250 seismic stations, tens of thousands of volunteer data collectors, 10000 scientists	Unknown	Unknown, non-automated; successfully predicted Haicheng earthquake (1975), but also 1 major miss (Tangshan, 1976).	Press 75, Teng 77
	U.S.S.R. (N. Kindershaya)	U.S.S.R.	U.S.S.R.	Seismic	150	Unknown		

APPENDIX B

MAJOR EXISTING AUTOMATED GEOPHYSICAL DATA COLLECTION EFFORTS

NAME	IMPLEMENTER	SPONSOR	AREA SERVED	SENSORS			DESCRIPTION, COMMENTS, PROCESSING, HARDWARE, ETC.	REFERENCE(S)
				TYPE(S)	NUMBER	SAMPLE RATE		
	Japan Meterological Agency	Japan Meterological Agency	Japan	Seismic Dilatometer	150 10-20	1 Hz. 1/600-1/3600 Hz.	Semi-real time, nation-wide net telemetered by phone, FM modulation to central station; event-triggered.	Kanamori 78
	Various Japanese Universities	?	Japan	Seismic Strainmeters	10 nets each with 5-25 stations; 20	?	For recording micro-earthquakes; approximately 50 events/day; recorded on tape or cassettes.	Kanamori 78
SISMEX	Instituto Ingeneria, Mexico	?	Mexico	Seismic	5	36 Hz.	Radio telemetry digitized centrally upon demand. Processed with RESMAC data on PDP 11/40 with event detector.	EOS 79
RESMAC	Instituto Investigaciones Matematicas Aplicadas y en Sistemas	?	Mexico	Seismic	2+	36 Hz.	Digital data telemetered by Mexican National Microwave Network. Processed with SISMEX data on PDP 11/40.	EOS 79
	Instituto de Investigaciones Sismica (Arturo Aburto)	?	Nicaragua	Seismometers, Accelerographs Seismoscope	16 27 25	?	Radio telemetry to central site in Managua, Nicaragua	Alexander 79

APPENDIX C

PRESENT GEOPHYSICAL DATA MANAGEMENT SYSTEMS

What follows is a description of the size, structure, and characteristics of some representative major existing, computerized geophysical data management systems. There is no claim that it is exhaustive. Each system could potentially accommodate the data described in Appendix A, given adequate funding for engineering development and institutional arrangements, and each has important strengths to contribute to a CDIMN. For each system, the authors have attempted a preliminary assessment to determine its ability to absorb the anticipated data and/or to satisfy the user requirements described in Section 5.

C.1 GODDARD SPACE FLIGHT CENTER VLBI SYSTEM (OFFICE OF SPACE AND TERRESTRIAL APPLICATIONS, NASA)

A database management system is in use at the Goddard Space Flight Center to handle the acquisition and reduction of VLBI data obtained using the Mark III field system. The system's purpose is to enable experiments to be integrated and coordinated, and to assure data integrity. Under the previous semi-manual, card-oriented, fixed-data-formats system, there were a number of data-related problems. It was hard to monitor the changing input and output requirements of the current routines which were used in the reduction process. It was difficult to know which versions of the various routines had been used to reduce each of the data sets.

The decision was made to adopt a flexible, format-free, permanent information transfer scheme. In the design of the new system, portability of the software between all systems currently doing VLBI research has been stressed. The fact that portability has been achieved has been demonstrated by the ease with which the system has been implemented at Goddard Space Flight Center, Haystack Observatory, and the Massachusetts Institute of Technology.

The database itself consists of a series of FORTRAN programs and a set of files. All access to these files is by means of the "database handler." This requirement is to ensure the integrity of the data. A single data file usually contains the data related to one experiment. Each data file consists of a file identifier, textual history entries, table of contents records giving the logical layout of the data, and finally the data itself. This structure is shown schematically in Figure C-1. The history entries are used to provide a record of the various data reduction steps which have been performed on the data, which a user must enter upon updating the file. Data records are user-dimensioned arrays which are identified and accessed by 8-character ASCII codes called LCODE's. The one-to-one association between any user-specified LCODE and the physical location of the array is maintained by one table of contents record, with one table of contents for each of the (up to) 99 different types of data records. Data records may be real,

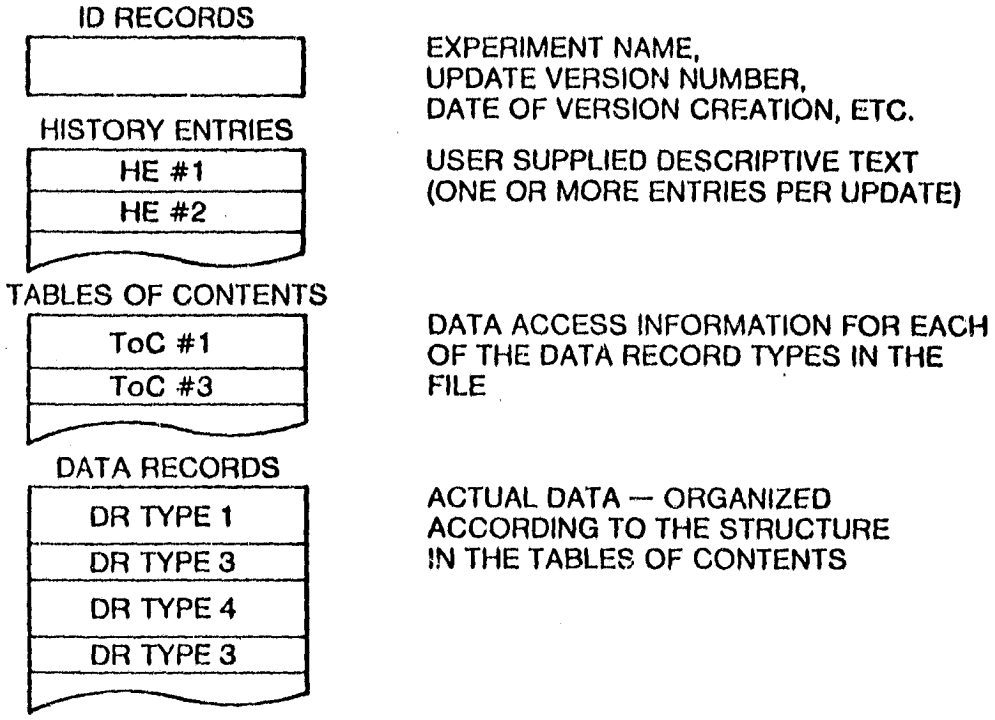

Figure C-1: Goddard Space Flight Center VLBI Data Base File Structure [Ryan 78]

integer, or alphanumeric arrays, stored linearly with numbers coded in HP binary and characters in ASCII. All creation, updating, and reading of the database by application programs must be through the database handler user interface, using commands such as ASK, ADD, DEL, GET, and PUT [Ryan 78].

At each step in the reduction process, both the input and output are retained in the data file. This is advantageous for any reexamination and reprocessing of the data, as well as to ensure its integrity. At appropriate stages in the reduction process, the data records are placed in archival storage (see Figure C-2). A series of 12 application programs, each of which access data through the data base handler user interface, are used in controlling the VLBI system from the time an experiment is scheduled until the time the refined geophysical data is produced.

A VLBI experiment consists of four phases: (1) planning, (2) data acquisition, (3) data reduction, and (4) data analysis. The planning phase is done by the program SKED on an HP 21 MX by generating an updated database file with a series of observation records, based upon the time interval of the experiment, and a machine-readable schedule for each participating observatory. The acquisition phase at each observatory takes place outside the data base system, using the FIELD program to read its schedule, to record observations on very high density (Mark III, 33000 bpi) data tapes, and to continuously log correlative information such as weather parameters and instrumentation status. In the reduction phase, log

information is entered into the database by DE-LOG and then Haystack Observatory's HP 21 MX is used with the PREP, COREL, and FRNGE programs to reduce the data tapes and log data into a much smaller set of data that is added to the database and interactively edited through the program EDIT. Finally, in the analysis phase, the remaining programs perform sophisticated calibrations (CALIB), corrections for radio source peculiarities (STRUC) and polar motion (ASTRO), computations of theoretical values of the observations based upon a priori information (CALC, on the IBM 360/91), and interactive (on the HP 21 MX) weighted-least-squares regression analysis to recover geophysical and astrometric parameters of interest [Ryan 78].

As all of these reductions and analyses are performed, records are kept in the history portion of the file to show precisely what has been done with the data. This makes it relatively easy for another investigator to work his way back from the finished data and carefully analyze any anomaly suggested by the data.

The output data that have been of interest to the quite limited user community, primarily Goddard and NGS, are baseline lengths at various epochs, polar motion, and UTI. The total amount of these is only a few hundred numbers to date [Ma 79].

The system is being used by investigators at Goddard, MIT, and Haystack Observatory, presently. It seems to be satisfying the data processing requirements of these institutions quite adequately [Ma 78, Ma 79]. Data exchange between Goddard and Haystack systems can be either by magnetic tapes prepared by the catalog program used to archive files, or directly by ordinary 300 or 1200 baud phone lines. The files transmitted are essentially identical to those kept active on disk at each installation. It is anticipated that the same system can be used to exchange data with the NGS, since NGS plans to have an HP 21 MX installation [Ma 79]. The success of this system may influence other facilities to acquire it for their use.

C.2 NATIONAL GEODETIC SURVEY DATA BASE (NATIONAL GEODETIC SURVEY, NOAA)

The National Geodetic Survey (NGS) of the National Oceanographic and Atmospheric Administration (NOAA) has developed the National Geodetic Survey Data Base to store and maintain information concerning each horizontal and vertical control point within the United States. Since its inception approximately two years ago, data on approximately 215,000 horizontal control points have been entered and validated. These control points include 4,000 control points derived from optical astronomical observations and about 150 Doppler points [Robertson 79]. Data from approximately 500,000 vertical benchmarks, of which about 8% overlap with horizontal control points, are just beginning to be entered into the database. The active part of the database will contain about 12 billion characters of data when fully implemented. It is accessible by a database management system and applications software which was designed in-house specifically for geodetic data. It is currently implemented on an IBM 3031 that is owned and operated by a commercial vendor, Optimum Systems Incorporated.

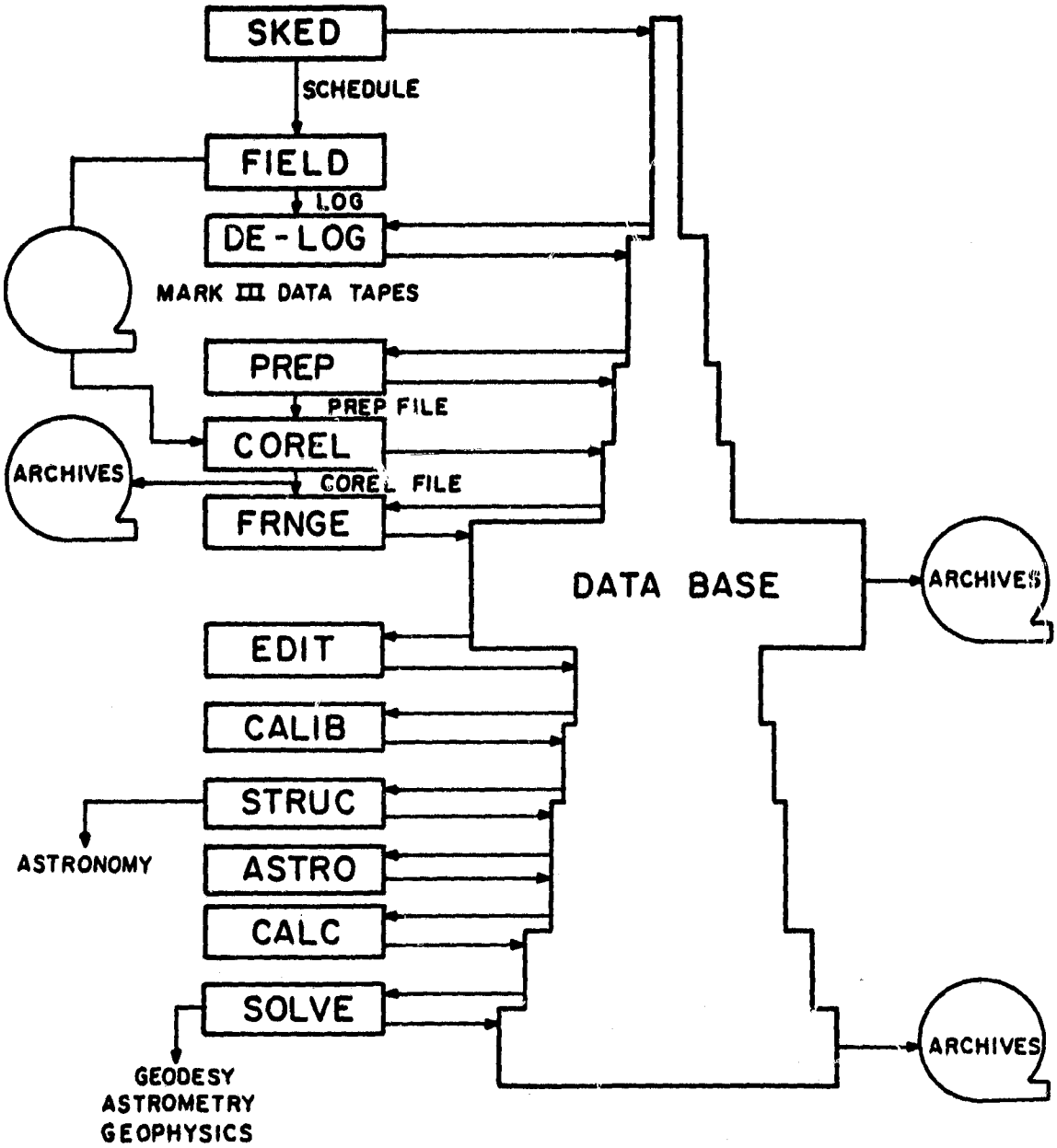

Figure C-2. Goddard Space Flight Center VLBI Data Management Routines

The motivation for the database system was the need for timely information, the need to eliminate transcribing errors, and the readjustment of the North American Datum. The National Geodetic Survey Data Base was designed based upon an assessment of user requirements within NOAA by Mr. David Alger, currently also the database administrator. Priority was given to applications within the NGS, particularly the massive project to readjust all horizontal positions within the U.S. by 1983 and all vertical positions by 1985. NGS also accepts and validates new geodetic measurements entered directly by phone lines from NGS surveying field parties, and from other agencies, through a field processing system (using a set of programs called TENCOL) [Safford 78].

Each control point, or station, is identified by a unique identifier composed of the station's latitude, longtitude, a 3-character code ("QID") corresponding to the 7-1/2 minute quadrangle sheet in which it is located, and a four-character station number. The record for each station is segmented into three non-redundant portions. The first portion, which is stored at the lowest level of a hierarchical geographical index that resides on on-line disk, contains 24 characters describing the attributes of that station. Examples of station attributes include: indicators of whether the station is a horizontal or vertical station, and whether it was measured using conventional or astronomical techniques; the station's county and state; and its accuracy class (first-order, second-order, third-order, etc.). The second segment contains one or more actual observations made from that station, usually an angle and distance to some identifiable geographic point. Each of the observations requires approximately 80 characters of information. There are currently around 2-1/2 million such observations. The third segment of the station's record, contained on mountable disk packs, contains English text descriptors up to 3200 characters in length (forty 80-character records) of the exact location of that station, i.e., how to find it based upon local landmarks. A partial list of the database groups is given in Table C-1. The input formats and specifications for horizontal control points are described in [Pfeifer 78].

The record for any station can be located through the use of indices that are stored on on-line disk. These indices are derived from the attributes of each station. The primary key is geographical, by "QID" code. Larger regions are indexed through tables containing the quadrangle identifiers of quadrangles that overlap with the desired region. Within any given quadrangle, selection criteria may be based upon any of the stations' attributes [Alger 78, Love 78].

Users interactively formulate requests for the retrieval and processing of data in the database through a query processor whose commands are essentially macros in the text editor language "SUPER WYLBUR". Any number of simultaneous users may dial up the system from remote terminals, whereupon the query processor interactively prompts the user with "menus" of operations he may perform, in order to help him formulate a request for information. The system then writes the necessary job control language for a batch request to the database, which then writes the requested data on a file specified by the user. Depending upon the size of the request, processing of the request requires one minute to one-half hour. The user may then examine this

data interactively, again using the query processor. No processing capabilities other than reformatting are provided as part of the database; users generate their own processing programs.

Besides the in-house NGS users, access to the database has been granted to the Pacific Marine Center in Seattle and the Atlantic Marine Center (both institutions within NOAA). All users outside of NOAA are not currently permitted direct access to the system; requests for information are handled by an information center at NGS, on a cost-refundable basis. For example, an oil company may ask for, say, a listing of all stations in a particular county, and will pay the costs associated with the formulation and processing of the resulting request.

As the data for horizontal control stations has become fully entered and validated, utilization has increased from five requests per month in January 1978 to 169 requests per month in December 1978. Most of these requests were for conventionally-derived geodetic positions. However, 28 of the 169 requests in December 1978 were for astronomically-derived positions, and many users are waiting for astronomically-derived horizontal deflections and gravimetric deflections to be made available in sufficiently high densities. Astronomic observations are expected to be added at the rate of 100 stations per year, most of those being taken from the sites of existing control points.

It is already anticipated by the NGS that this database will be augmented with horizontal control points derived from inertial, Doppler, photogrammetric, and possibly traverse techniques. The inertial geodetic technique, which employs gyros mounted on trucks or helicopters, shows promise of 5 cm accuracies over distances of 30 to 40 km. If all such data are added to the system, it could double the size of this database [Alger 79].

Clearly the NGS database is geared toward geodetic data types, and will implement some VLBI and related geodetic measurements. Furthermore, the NGS has established relationships with most of the major institutions involved in the production, use, or distribution of geodetic data (NGSDC, NASA, DMA, USGS, etc.) [Coordination Plan 78]. It is a leading focal point for user requests, and has established an information center to satisfy those requests. It does not, however, currently have other geophysical data types other than gravity measurements, nor the sophisticated user processing functions or flexible database management system of some systems such as Geolab (cf. Appendix C.6).

C.3 NATIONAL SPACE SCIENCE DATA CENTER (OFFICE OF SPACE SCIENCES, NASA)

The National Space Science Data Center (NSSDC), located at Goddard Space Flight Center, is the major archival data center for NASA's Office of Space Sciences (OSS) and is the World Data Center A for Rockets and Satellites. Its primary function is to provide data and information from space science experiments in support of

Table C-1: National Geodetic Survey Database Data Groups (Partial List) (Alger 79)

Horizontal Position Data

- Latitude
- Longitude
- State Plan Coordinate Zone
- Station Name
- Database Identifier
- State Code
- Year Established

Horizontal Observations

- Distances (taped, EDM, etc.)
- Directions

Horizontal Descriptions

Deflection Data (astro-gravimetric values for points)

Vertical Elevations

Vertical Descriptions

additional studies beyond those performed by principal investigators. Its database contains about 60,000 tapes from more than 700 space science experiments. Last year approximately 3,000 digital and 10,000 analog data tapes were received, and about 1500 data tapes were sent out in response to users' requests. The center is intended strictly as an archival facility for reproduction of data and for on-site data use, with no provision for real-time access.

Inputs are restricted to analyzed (i.e., not raw) data. Producers are asked to supply documentation in a standardized format, but in practice the documentation varies considerably. Functions of the NSSDC are largely validation of inputs received, and transcription to a medium that is useful for users. Validation involves the verification of start and stop times for measurements as well as format verification. Paper inputs, such as maps received from the Defense Mapping Agency, are distributed and archived. They may also be transcribed to microfiche for later storage, copying, and distribution. Magnetic tapes may be transcribed to accommodate 7- or 9-track tape drives having various densities, or the varying word lengths of different brands of computer. Catalogs of available data organized by an NSSDC spacecraft common name/principal investigator/ dataset name hierarchy, are also prepared [NSSDC 78].

Although some data in the NSSDC are proprietary, the overwhelming majority of data is open to all requesters, including those from socialist countries. Users are charged for any request requiring over $300 worth of machine time (about 20-25 tapes). NSSDC advertises a one-month turn-around time to satisfy requests, however one-day turn-around times are possible under unusual circumstances.

The NSSDC contains some satellite-derived geodetic data, including (1) satellite laser tracking data from the LAGEOS, GEOS-1, and GEOS-2 Satellites, received from Goddard Space Flight Center and SAO in Germany and Holland; and (2) C-Band (Wallops Space Flight Center) and S-Band (Goddard Space Flight Center) data from the SEASAT and GEOS-3 Satellites. A complete listing of the current NSSDC laser data holdings are provided in Table C-2. Typically, these data are received as one tape for one month's period, containing files of observations for 6 to 7 satellites. Each file corresponds to one satellite, and one observation is made per orbit. There are currently 10-15 routine users of these data, and many more users who occasionally make ad hoc requests. The laser tracking data is only available to people on an approved list, which the project scientist controls [Vette 79a]. See also the discussion of laser ranging systems in Appendix C. 9.

Besides the laser data, NSSDC has Doppler and satellite-to-satellite (e.g., GEOS-3) data, magnetometer data, earth photos, etc., that have relevance to global geophysical phenomena. In addition, a Non-Satellite Data File (NSDF) contains ancillary data, including data derived from satellite data. Relevant data types include star catalogs, ground magnetometer data, and satellite optical tracking observations [Vette 79a].

Table C-2: Current NSSDC Laser Data Holdings, by Source, (with Time Spans of Data) (Vette 79a)

NASA SATELLITE LASER DATA	SAO SATELLITE LASER DATA
BE-C (65-032A-03C)	BE-C (65-032A-03D)
04/24/75 - 08/31/79	01/01/75 - 12/31/78
GEOS-1 (65-089A-02G)	GEOS-1 (65-089A-02H)
04/17/75 - 08/31/79	01/01/75 - 12/31/78
GEOS-2 (68-002A-02C)	GEOS-2 (68-002A-02D)
05/05/75 - 07/30/77	01/01/75 - 07/30/77
GEOS-3 (75-027A-04A	GEOS-3 (75-027A-04B)
04/19/75 - 08/31/79	04/09/75 - 12/31/78
STARLETTE (75-010A-01A)	STARLETTE (75-010A-01B)
04/17/75 - 08/31/79	02/06/75 - 12/31/78
LAGEOS (76-039A-01B)	LAGEOS (76-039A-01A)
05/07/76 - 08/31/79	05/04/76 - 12/31/78
SEASAT-A (78-064A-06A)	SEASAT-A (78-064A-06B)
07/01/78 - 12/31/78	07/01/78 - 12/31/78
LUNAR LASER RANGING REFLECTOR	
07/21/69 - 06/30/79	

C.4 NATIONAL GEOPHYSICAL AND SOLAR-TERRESTRIAL DATA CENTER (EDIS, NOAA)

The main institutionalized mechanism for data communication in the geophysical community is through the Environmental Data and Information Service (EDIS) in Boulder, Colorado. The EDIS, a branch of NOAA, has a center called the National Geophysical and Solar-Terrestrial Data Center (NGSDC) which conducts a national and international data and data information service in all scientific and technical areas involving solid earth geophysics, marine geology and geophysics, the high atmosphere, the space environment, and solar activity. These services are provided for scientific, technical, and lay users in governmental agencies, universities, and the private sector. In the program area of Solid Earth Geophysics, NGSDC provides, on a worldwide basis, data and data products and services in the fields of crustal movements, seismology, geomagnetism, marine geology and geophysics, geothermics, solar-terrestrial physics, and other related disciplines [Rinehart 78, Meyers 78]. NGSDC also operates World Data Center A for Solid Earth Geophysics, which includes seismology, tsunamis, gravimetry, earth tides, recent movements of the earth, magnetic measurements, volcanology, geothermics, and paleomagnetism [World Data Center A 78].

Filling over 7,000 requests annually, NGSDC is a focal point for dissemination of data and information for both technical and general users, except for information on recently collected data. For example, the U.S. Geological Survey in Golden, Colorado, operates the National Earthquake Information Service (NEIS), a service for rapid location of earthquakes and for gathering data about earthquakes (see SEDAS, Appendix B, and Appendix C.8). After initial distribution by USGS, however, this information is released to NGSDC for further distribution [Arnold 79, Rinehart 79]. Similarly, by interagency agreement, the USGS sends marine geophysical and geological data to EDIS as soon as it is in the public domain [Loughridge 79], and the NGS sends a copy of its control station location data to NGSDC [Carter 79]. Much of the NGSDC data is, in turn, distributed on an exchange basis.

The NGSDC makes wide use of computers in providing these services. Currently, two CDC 6600 computers and a large Calcomp 748 plotter aid in the data processing functions of new data entry, data validation, data retrieval requests, and map generation. Planned improvements include communication between the two large computers, and the addition of a Data General Eclipse minicomputer [Meyers 79].

Seismic data is a prime example of computerized data at NGSDC that is frequently requested, mostly by civil engineers. Excluding the approximately 5 million microfilms of seismic waveforms on file, perhaps 85 to 90% of the seismic data are digitized [Rinehart 79]. NGSDC has in machine-readable form the seismicity parameters (name and coordinates of epicenters, locations where felt, magnitude, etc.) of about 250,000 events. Additionally, there are files of earthquake effects. About 10-15 requests are filled per week, about 98% of which have geographic location as the primary search key [Rinehart 79].

NGSDC prepares seismic histories for local and regional areas; answers public inquiries on all aspects of non-current earthquakes; publishes historical compilations and annual earthquake summaries jointly with USGS; generates maps; and makes available seismograms, strong-motion earthquake records, computer listings of earthquake locations, and other data in a variety of formats. A mailing list of approximately 4200 is kept advised of recent acquisitions of seismic data [Rinehart 79]. More and more, NGSDC hosts visiting scientists who are paid to come to NGSDC to study the data in its database and to perform data validation, "cleaning," and documentation [Lander 79].

Two services performed by EDIS that closely relate to the proposed CDIMN (see Section 6) are the Environmental Data Index, (ENDEX) and the Oceanic and Atmospheric Scientific Information System (OASIS), which provide to users rapid computerized referral to some available environmental data files (ENDEX) and published literature (OASIS) in the environmental sciences and marine and coastal resources. ENDEX databases are computer-searchable, interdisciplinary files of environmental data which can be searched by geographic area, the parameter measured, the institution holding the data, projects, etc. ENDEX has three major components: descriptions of data collection efforts, detailed inventories of large, commonly used files, and descriptions of data files. ENDEX databases are updated every two years. Most of the databases currently deal with oceanographic data files. The database of greatest relevance to a CDIMN is called the Enviromental Data Base Directory (EDBD), which is a computerized inventory of 3500 descriptions of environmental data files pertaining largely to the Great Lakes and coastal areas of the U.S. since 1850. Each EDBD file description lists the geographic area of data collection, types of data parameters and methods used to measure them, when and where the data were collected, the sensors and platforms used, data formats, restrictions on data availability, publications in which the data may be found, whom to contact for further information, and the estimated cost of obtaining the data. The EDBD is searchable in batch or interactive mode on any of the items listed above, with search results tailored to the user's needs. It is planned to complete a comprehensive nationwide inventory to augment the EDBD by 1980.

OASIS is a computerized information retrieval service that furnishes searches of both NOAA and non-NOAA multidisciplinary bibliographic databases of published technical literature and on-going research efforts. Databases most relevant to the proposed CDIMN include Geophysical Abstracts (GPA) provided by USGS, Library of Congress (LIBCON), Government Reports Announcements (GRA) supplied by NTIS, Bibliography and Index of Geology (GEOREF) supplied by the American Geological Institute, NASA Information Bank (NASA), and the Science Citation Index (SCISEARCH).

World Data Center A for Solid Earth Geophysics has the capability to become the focal point for a CDIMN and to absorb the new data types, subject to its limited funding and manpower resources [Lander 79]. However, one of the major problems with the effectiveness of the NGSDC is that the timeliness of its data is determined by the efficiency and

willingness of the diverse groups that contribute data to it. The result is that there can be many months or even years of delay in the receipt of data by NGSDC, and this prevents this service from being a near-real-time data service at present. Hence, many researchers bypass it and go directly to the appropriate principal investigator(s) or agencies who are producing data that they require [Whitcomb 78, Rinehart 79]. For long-term archival and "librarian" services, however, NGSDC is the recognized national and international center for the majority of data types required by a CDIMN. It should be noted that geodetic data types are not currently available through the World Data Center system primarily due to security implications of precise geodetic points to weapons targetting [Lander 79].

C.5 CEDAR, CROSS, AND EDIN (CALIFORNIA INSTITUTE OF TECHNOLOGY)

The Seismological Laboratory of the California Institute of Technology (Caltech) has two major, automated geophysical data collection systems, called CROSS and CEDAR, and in connection with the Jet Propulsion Laboratory distributes portions of these data through its Earthquake Data Integration Network (EDIN).

The Caltech Remote Observatory Support System (CROSS) is an operational system developed by the Seismological Laboratory for the automatic collection, storage, and distribution of measurements from long-period geophysical instruments. Funded by the USGS, CROSS operates as a service to principal investigators (PIs) by telemetering and storing data from remote instruments belonging to the PI, such as tiltmeters, gravimeters, strainmeters, and Telerex instruments for electrical dipole measurement.

The heart of the CROSS system is a Caltech-developed device called a Telemetry Interface Module (TIM). The TIM is a small, self-sufficient, remotely-programmable, microprocessor-controlled unit that is located in the field for digitizing, storing, and telemetering batches of observations to a central computer. Each TIM can accommodate up to 8 channels of analog or digital inputs from instruments having sample rate requirements greater than one per minute. Sample rates may be determined either by the instrument itself or from a table stored in the TIM.

The central computer is a Prime computer, a general purpose computer with a multi-user time-sharing system. Data collection is accomplished by a special program which "wakes up" every 24 hours, dials up each TIM in succession over standard phone lines, triggers the transfer of all measurements collected by the TIM over the last day into a distinct file in the computer's disk storage, sets a timer to go off in 24 hours, and goes back to "sleep". These files on on-line disk are pointed to by a TIM directory, using a unique two-character code for each TIM. Each data file has textual information describing the TIM, principal investigator responsible for each instrument, etc.

Distribution of these measurements to users is accomplished either in batch mode by standard, documented, 800 bpi tapes, or

through the use of interactive terminals connected to the Prime computer. The software written for CROSS users by Robert Nickerson of the Seismological Laboratory emphasizes primarily the automatic data collection and data retrieval functions, although simple plotting and graphing routines are also available. Users may then write their own programs to process that data using standard Prime software. Access to data files is currently not restricted; use by researchers other than the principal investigator has not yet been a problem.

Operational since mid-December 1978, CROSS currently has 8 TIMs implemented throughout California with 2 more scheduled to be implemented in 1979. Typical installations include: 1) Kresge Laboratory, Caltech - 3 analog channels, 2) Robinson Building, Caltech - 6 analog channels, 3) Palmdale - 8 channels, 4) Pearblossom vicinity - 1 digital (ASCII) channel, and 5) Hollister - 8 analog channels. Each channel currently samples one computer word of 12 bits every five minutes, but this is nominal, not fixed. Expansion of the CROSS network by at least two TIMs within the next month is anticipated; however, such additions are prompted by requests from principal investigators as their need arises [Nickerson 79].

The CEDAR (Caltech Earthquake Detection and Recording) system is an advanced seismic geophysical data system that was developed by Caltech for SCARLET (Southern California Array for Research on Local Earthquakes and Teleseisms), an array of 146 seismic stations that are telemetered into Caltech via leased telephone lines for automated recording and processing. The CEDAR system has been chosen as the model for a standard computer recording and processing system that is being purchased by the U.S. Geological Survey for seismic networks that it supports within the U.S. The DEC computers for the system have been purchased and were delivered in December of 1978, and software development is underway.

The CEDAR system has been fully operational since January 1, 1977. It consists of an on-line system and an off-line system, with the off-line system acting as a backup to the on-line system. The on-line system constantly monitors the analog signals from 146 stations in real-time. These signals are first digitized at 50 samples/sec before analysis by a digital detection algorithm. When an event is "detected" within the network, the system begins recording the digitized seismograms from all 146 stations on 9-track 800 bpi magnetic tape. Recording continues for a fixed period of time after the detection condition lapses.

The raw data tape then moves to the off-line system. Each tape is first prescanned, producing a listing of the detection parameter when the system was triggered, as well as a plot of the seismic signal from each station contributing to the detection condition. During this pass, the 70 seconds of WWVB time code that was digitized and saved on the tape ahead of the event is programmatically decoded for subsequent calculation of absolute arrival times. A second pass of the tape is made with an analyst picking the P- and S-wave arrival times, using adjustable cross-hairs on a cathode ray tube (CRT) terminal with vector graphics capability.

The CEDAR system records approximately 35 discrete detection episodes each day. Of these, an average of 10 to 15 represent locatable earthquakes that are retained for future study. Several times each week, the accumulation of raw data tapes is copied to a permanent archive tape containing all the timing data as well as the digitized seismograms for each station recording a particular earthquake. False trigger events are deleted. Data currently being distributed to other institutions, as part of the Earthquake Data Integration Network (EDIN) project at JPL, are extracted and formatted from this edited tape.

The CEDAR system is currently generating approximately 150 800 bpi magnetic tapes of seismic data per year. These data include complete seismograms of earthquakes for all stations that record significant energy. A substantial reduction of data can be achieved by an abstraction of these data, and this is routinely done in the form of tapes containing only P- and S-wave phase data, epicentral parameters, and some amplitude data. However, until geophysicists discover just what abstraction of seismic data will be needed in order to predict earthquakes, there is no substitute for the retention of the entire seismogram [Whitcomb 78].

The CEDAR and CROSS systems do not currently exchange data, but co-location of the two systems makes it easy to access either data-base quite readily from Seismological Laboratory terminals available to users. The CROSS system would be a more appropriate repository for geodetic data than would CEDAR, but CROSS is still experimental in nature and is not properly sized for a large volume of data in the near future.

C.6 GEOLAB (USGS, Menlo Park)

Another existing system is the Geolab system developed by James Herriot of the Tectonophysics Branch of the USGS in Menlo Park, CA. Originally implemented on Lawrence Berkeley Laboratory's CDC 6600, Geolab was revised and expanded in 1978 when it was rewritten for implementation under the Multics operating system on the DEC 11 at USGS, Menlo Park. Currently serving approximately 40 in-house users at USGS, Geolab contains low-frequency data from about 500 instruments throughout California, including tiltmeters, strainmeters, magnetometers, gravimeters, etc. Addition of seismic data, including seismic traces, is currently under development. Geolab is a user-oriented, highly interactive data storage and retrieval system, accessible exclusively through dial-up user terminals. It is made up of three major components: 1) GEOLAB--the top-level operating system which processes user commands and invokes the appropriate modules for execution of those commands, 2) GEOBASE--a flexible database management system for organization and retrieval of the time series data, and 3) GEODAT--the actual time series data from instruments.

The GEOLAB component is an interpreter of user commands similar in nature to the APL language, but augmented by additional high-level commands found in many other compilable languages. Every user entry is treated as an operator, and operators are accummulated

in a working stack, which are then operated upon in reverse order. The operators permit a good deal of flexibility depending upon the user's sophistication and his experience with the system. For example, commands may be specified by the user either with a full English word such as "quit", or abbreviated with a single letter or two letters such as "q" for the ease of users who are already familiar with the system. The command for creating graphs ranges from a simple command "graph" for graphing of a single time series using default specifications, to a more detailed specification of many parameters that permit creation of sophisticated, specialized graphs with overlaying, enlargement, and axis rescaling of time series data for display. Missing data have a special value stored internally, which is recognized and treated appropriately by the graphing routines. Other processing capabilities include the ability to loop, to branch (such as in "if...then...else" and "go to"), to invoke other Geolab or Multics routines, to filter time series data, to perform spectral analyses, and to build customized routines made up of other Geolab commands or routines (i.e., macros) defined by the user for his purposes or those of colleagues.

The GEOBASE component supplies data through routines invoked by commands given to GEOLAB. GEOBASE is a record-oriented database management system, which uses the first and second records to define the model (i.e., schema or layout) of all later records. Typically the model has each record corresponding to one instrument, with the fields in the record corresponding to attributes of that instrument, such as location, type, etc., as well as a pointer to the beginning location where samples for that instrument are stored as a time series in GEODAT. The user may alter his model at any time, and therefore the fields upon which any of the time series may be keyed in expressions specifying the retrieval selection criteria for desired records. In addition, GEOBASE possesses the usual database manipulation, processing, and retrieval commands invokable through GEOLAB. It is anticipated that the seismic events can be accommodated in a similar fashion, with specialized files for a station log, an event list, an event log by station, and an event archive file.

The GEODAT component contains the actual observations taken from USGS instruments throughout California, arranged as time series. For example, magnetometers have samples taken once every minute, while tiltmeters and other instruments have one sample taken every ten minutes. Even so, almost 50% of the tiltmeter samples are unchanged from the previous observation. These times series are pointed to by records in GEOBASE [Herriot 76, Herriot 78].

The Geolab system has emphasized the user interface and direct interaction with the computer through the use of dial-up terminals. The commands closely resemble English and are easy to learn. On-line tutorials on each command are available. These are its major assets as a potential repository for space-derived geodetic data. However, Geolab is currently not tied in or compatible with other geophysical data systems, is limited to data collected from USGS instrumentation, and is not available outside of the USGS. Furthermore, the collection of much of the data in Geolab involves at least one manual (non-automated) step, diminishing the timeliness of

the Geolab database as compared to the CROSS, NGS, or Goddard VLBI systems. Geolab's flexibility and adaptability, however, are evidenced by the fact that the majority of its users employ the system as an overgrown calculator for general computing needs, rather than for the data contained in GEODAT. There appears to be no inherent limitation within Geolab which would preclude augmenting the current data with data from instruments operated by other agencies or with seismic or geodetic data, other than the absence of a telecommunications interface and a reformatting capability to insure the compatibility of data received from other systems.

C.7 JET PROPULSION LABORATORY VLBI SYSTEMS

The Jet Propulsion Laboratory (JPL) has four different VLBI data processing systems, the first three of which are known as Block 0, Block 1, and Block 2. Each system has a different purpose and schedule of implementation.

The Block 0 system is the currently existing VLBI data reduction capability during the proof-of-concept phase of VLBI development. It is the equivalent of the Mark II data collection systems elsewhere in the VLBI community which are now being replaced by Mark III systems. It is composed of a set of hardware and a sequence of programs whose major objectives are to compile initial baseline vectors and a radio star catalog which includes a list of stars, their locations, and correlated flux strength.

The first phase of the Block 1 system is operational as of the date of this report, using a software correlator. A hardware correlator has been built and is undergoing testing, and software for it is under development. The Block 1 system is intended as strictly a production system with specialized application to provide NASA's Deep Space Network (DSN) with parameters for tracking and navigation of spacecraft with a 24 hour turnaround, to an accuracy about one order of magnitude less than the most accurate VLBI systems. The primary parameters are the relative setting, rate, and stability of the clocks (i.e., clock synchronization) and the relative station positions (i.e., baseline vectors and UT1). Data are collected at 500 kilobits on one channel at a time, 8 channels total, and is stored on computer magnetic tape. The data are then transmitted via wide-bandwidth transmission to JPL for processing, a mode of communication unique to this JPL system. A software correlator written for IBM 370 compatible machines will be used initially to correlate the data, and is currently in the testing stages. Eventually a hardware correlator, which is currently being developed, will be used in place of software correlation to improve efficiency. Archiving of the data collected will be limited to sufficient raw and processed ("fringes") data to verify new correlators. The emphasis of the Block 1 system is upon efficient and automated production of a limited set of parameters for routine use by the DSN, rather than the flexibility and archiving required by scientific experimentation which characterizes the Goddard Space Flight Center VLBI database system (cf. Appendix C.1).

The Block 2 system is still in its conceptual stages, and should be operational by about 1983. It will be a parallel to the

Mark III hardware and correlators at Haystack Radio Observatory, having a virtually identical terminal (i.e., recorders, portions of the receivers, etc.), and will be compatible enough with the Mark III systems to exchange both raw and fringe data. Block 2 will be a hybrid system envisioned to serve both research and production needs. The primary objective is to maintain and expand the star catalog for the Block 1 system, in order to limit the number of unknowns that that system must solve for. However, the Block 2 system could also be used to provide a fixed base for mobile geodesy and to participate in general radio astronomy VLBI experiments. It will record up to 28 channels (initially, 8 channels) at 4 megabit rates. These will be recorded on tape and physically transported to a centralized site, because the maximum economic communication lines have inadequate capacities.

Finally, the fourth VLBI system is oriented primarily toward monitoring clock synchronization. This system has essentially the same front end as the other systems, but collects a very wide band (about 33 to 100 megabits) in very short bursts (approximately 120 to 40 microseconds). While it requires less processing than the other JPL systems to extract clock information, it is more limited in other respects. This system can also be useful in testing the clock synchronization aspects of the Block 1 system [Smith 79b].

C.8 NATIONAL EARTHQUAKE INFORMATION SERVICE (USGS, DENVER)

The National Earthquake Information Service of the Global Seismology Branch, USGS, is the national focal point for seismic data collection and analysis on a global scale. Employing a world-wide network of long period seismographs, and a computerized database of observations, the NEIS prepares a bulletin of global seismic events and provides data to research scientists as well as other national and international data centers.

Seismic data is gathered for the NEIS by 1500 to 2000 stations scattered at varying densities all over the world. The NEIS operates its own network of approximately 100 stations which are telemetered to the NEIS via government-leased lines, and whose analog waveforms are recorded on Develocorders and Helicorders for analysis of earthquake parameters. Other, regional networks routinely transmit observations of earthquake parameters in batch transmissions having frequency of once per week up to three per day. Seismographic networks in the northeast United States, such as the Michigan, South Carolina, and St. Louis networks, send batches of data by dial-up phone lines. Others, such as the Caltech, Berkeley, and Tsunami Early Warning Center in Hawaii, utilize the GSA network at intervals of approximately once per day. Networks in foreign countries report earthquake parameters to the NEIS via the Diplomatic Telecommunications Network, the AUTODIN military network, and the WMO network. These data are all collected within a day or so of event occurrence. In addition, other world-wide data are transmitted via diplomatic pouch with considerably more delay. Photographic recordings from the approximately 100 instruments of the world-wide network arrive in this way. "Day tapes" that have waveforms collected

from approximately 12 Seismic Research Observatories (SRO) in foreign countries are sent this way to the USGS in Albuquerque, New Mexico. These tapes are consolidated into event tapes, which are then sent to NEIS with a total delay of approximately two months.

The waveform data are not currently entered into the database. A PDP 11/03 microcomputer monitors the incoming batch of signals from the NEIS network in order to detect events and to give a very rough estimate of magnitude, time, and location. Develocorder signals are analyzed manually to derive parameters such as P-wave arrival times, amplitude, first motion, etc., which are then keypunched into the database. Only the waveforms from the SRO stations are recorded on a separate PDP 11/70 for analysis.

The bulk of the NEIS database is in the form of "observations", one observation comprising all relevant parameters from one event at one station. About 30,000 to 60,000 obervations are added to the database each month. The database resides on the USGS's Honeywell computer in Denver, using the MERGE general purpose relational data base management system. A more specialized, "home-grown" system is under development on the PDP 11/70. Observations are stored chronologically on tape, with a directory maintained on disks. Organization is not by event because insufficient density of instruments in some networks precludes gathering enough observations to definitively locate an event [Arnold 79].

NEIS guarantees announcement of the preliminary detection and parameters of any event over magnitude 5.5 in the United States, and over magnitude 6 world-wide. A more detailed estimate of parameters for any event over magnitude 5 can now be made within about ten days of event occurrence, compared with the 6 to 8 weeks required four years ago, despite a limited staff of only 14 people. Still longer waits for more detailed analysis are required for events of smaller magnitude.

Current data exchange with other data centers is quite limited. The Environmental Data and Information Service (EDIS) is sent a summary of events, but no observations. They also receive a copy of the seismographic films from the world-wide network, by diplomatic pouch, once per day. Currently, EDIS and NEIS exchange and copy data tapes from SRO's and project IDA, with EDIS eventually archiving any waveform data [Arnold 79]. The Honeywell computer, although interfaced with the Timenet Network, is not currently networked to the Menlo Park, California, or Reston, VA, USGS installations [Julian 78]. No direct interface with the Geolab system in Menlo Park is currently planned, although concepts from Geolab are likely to be incorporated into the new, more specialized database management system under development for NEIS. There has been little reported demand within the USGS for exchange of data between NEIS and other branches within that office. The seismic and other geophysical data collected by the USGS researchers at Menlo Park generally comes from short-period instruments having a maximum range on the order of hundreds of kilometers, whereas the NEIS instrumentation specializes in detection of global events [Arnold 79]. Finally, the NEIS

routinely sends a monthly tape of data from the United States to the International Seismological Center in Newbury, Berkshire, England, and in return receives a world-wide tape of data after approximately 22 months [Arnold 79]. The ISC also distributes monthly the authoritative Bulletin of the International Seismological Centre, as well as The Regional Catalogue of Earthquakes which contains all the summary information about each event that has been published previously in the Bulletin.

C.9 LASER RANGING DATA EXCHANGE

The primary focus for formal exchange of satellite and lunar laser ranging data is the National Space Science Data Center (see also Appendix C.3). Four major laser ranging sources currently collect and preprocess data that is forwarded to NSSDC for archiving (see Table C-2). These major sources, described below, are (1) the Goddard Space Flight Center (GSFC) network, (2) the Smithsonian network, (3) the University of Texas at Austin network, and (4) cooperating stations outside of the U.S. Approximately 25 investigators currently draw data from NSSDC to support final processing for individual studies that derive satellite orbits, station coordinates, polar motion, universal time, tidal and gravitational parameters, etc. [Coates 79]. In addition, there is some direct exchange of predictions, "quick-look" data, and processed data between individual investigators [Thorp 79, Smith 79]. The primary medium of exchange and archiving is computer-compatible magnetic tape, with the exception of "quick-look" data (perhaps one out of ten of the non-preprocessed data points) exchanged via teletype by the GSFC, Smithsonian, and cooperating overseas stations [Thorp 79, Smith 79]. The exchange of results of the studies is via published articles.

The GSFC network currently consists of one fixed laser ranging station at GSFC, 8 operational mobile laser ranging (MOBLAS) stations deployed in various locations, and one cooperative station at Patrick Air Force Base in Florida. MOBLAS data collection is oriented primarily towards validation and intercomparison with VLBI measurements, and secondarily upon deriving earth parameters [Stephanides 79]. Preprocessing of the uncorrected delays into ranges is performed by Mission and Data Operations at GSFC before archiving at NSSDC.

Processing of satellite laser ranging data by scientists of the Geodynamics Branch at GSFC is accomplished on the GSFC IBM 360/95 computer in two major stages. Data is first requested from NSSDC by specifying the satellite and dates of data desired; tapes containing one file for each satellite are received in response. The clean-up stage of processing merges these tapes into a format compatible with the scientists' programs, catalogues the new tape(s) and validates the data using iterative statistical techniques to remove or correct outliers. Using the tracking data for about one week to determine the satellite's orbit, grossly erroneous points (off by about 100 meters or more) are removed to produce a "cleaned" tape. This cleaned data is then broken up into 5-day segments to verify data points to within 50-100 cm.

Some of the erroneous data, possibly spotted earlier by an expert familiar with the data manually inspecting the data, may be correctable by special techniques. Processing done during the second analysis stage is peculiar to the individual investigator. For example, in one such study, LAGEOS data from all stations, including from some non-NSSDC sources, is processed in monthly chunks to determine the satellite's orbit for one calendar year. Then a large matrix (several hundred to a thousand variables) is formed to perform a least squares solution for station coordinates, polar motion, time, tidal parameters, etc. Initial values based upon a few months may be iteratively refined by combining the data for several months into one large matrix. Other studies have used laser ranging data in conjunction with tracking, altimetry (e.g. Seasat), and gravity data [Smith 79].

Data collection and analysis at the Smithsonian Astrophysical Observatory (SAO), under contract with NASA, is performed in collaboration with GSFC and several cooperating international stations. The SAO network consists of four stations in Arequipa, Peru; Natal, Brazil; Orroral Valley, Australia; and Mount Hopkins, Arizona. "Quick-look" data from 8 other cooperating stations world-wide (Tokyo, Egypt, Greece, Spain, etc.) and from GSFC provide predictions of orbits, and SAO reciprocates with its data. A Data General Nova minicomputer at each site points the laser mount and records data on two small, formatted and blocked tapes: one for raw data and one for reduced data, which is raw data with some corrections applied. These tapes are sent to SAO in Cambridge, Massachusetts, where the raw tape is archived and the data on the reduced tape are transferred to standard (ASCII) computer-compatible tape for storage (in a simple tape library--no database management system) and use on SAO's Digital Equipment Corporation VAX computer. Here statistical fitting is done to eliminate noise in the data, and the data are reorganized into files of data for each satellite in three-month blocks, which are sent to NSSDC. These data have center-of-pulse corrections applied, and have corrections for atmospheric delay, universal time, etc. which are available but not applied. The VAX system also performs the modeling necessary to calculate predictions (distributed in the form of Keplerian elements) using "quick-look" data [Thorp 79]. Approximately 4 analysts at SAO are engaged in satellite laser ranging research, for the calculation of the mean elements of satellite orbits and (secondarily) the earth and ocean tides, gravity field, etc., retrospectively over one-year periods. Also available on the VAX system are data files containing other tracking data types (S-band from NASA, Doppler from the Navy Transit System, radar from NORAD and the Air Force, etc.) going back to 1959, as well as surface gravity, topography, satellite altimetry (GEOS-3, Seasat), and geoid data [Gaposhkin 79].

Two types of laser ranging activities are conducted by personnel at the University of Texas. The first is the lunar laser ranging activity conducted at McDonald Observatory at Fort Davis, Texas. The second is the laser ranging work done using the Transportable Laser Ranging System (TLRS) developed by Eric C. Silverberg.

Data produced by the lunar laser ranging facility undergoes data reduction and refinement at McDonald Observatory and also at the Austin campus of the University of Texas. An initial preprocessing of the data is performed at McDonald. The remainder of the processing is completed in Austin. The processed data is sent to the National Space Science Data Center (NSSDC) semiannually, usually around April 1 and October 1 of each year. These semiannual deposits represent data collected during the first half and second half of each calendar year. The processed data is also sent directly to three or four users [Silverberg 79].

The data which is sent to NSSDC is contained in three files on magnetic tape. It is written in card image format, using a CDC 6400/6600 computer, with odd parity at 800 bpi. The first data file contains the signal photon detections, which have been compressed into normal points by a procedure developed at the University of Texas. The second data file is made up of photon detection measurements filtered by special statistical filtering techniques, again developed at Texas. The third data file contains the unfiltered photon stops. Three data card formats are used. One gives operational and environmental parameters for each observing run. Another card format contains the result of a single laser firing. The final card format contains the data for an entire run compressed into a "normal point" format [Shelus 79].

The data output from the TLRS system is sent to the Goddard Space Flight Center for processing. It is processed using the same techniques applied for the MOBLAS data described earlier. This common processing technique assures quality control and uniformity of processing algorithms and geophysical parameters [Silverberg 79].

Lunar laser ranging data from the Hawaiian observatory at Haleakala and from the Australian facility are now processed at Texas also. In the future German lunar laser data will probably be processed at Texas.

Exchange between cooperating laser ranging stations outside the U.S. and NSSDC or SAO varies based upon individual agreements with each country [Thorp 79]. For example, SAO exchanges "quick-look" data with 8 cooperating stations outside the U.S. [Thorp 79] and receives copies of data from the French Space Agency in yearly batches on magnetic tape [Gaposhkin 79]. The European Range Observation System (EROS), a consortium of European laser ranging stations that currently preprocesses and archives data from Wetzell, West Germany and Kootswyk, the Netherlands, in their data center in Greece, has agreed to exchange data with NSSDC and individual investigators at GSFC [Coates 79]. However, none of these data has yet been made available to users [Gaposhkin 79].

GLOSSARY OF ACRONYMS

ADS	Application Data Service Project, OSTA, NASA
BIH	Bureau International de L'Heure, Paris
Caltech	California Institute of Technology
CDIMN	Crustal Dynamics Information Management Network
CDAW	Coordinated Data Analysis Workshop, NSSDC
CDIDC	Committee on Data Interchange and Data Centers, GRB, NAS
CEDAR	Caltech Earthquake Detection And Recording System (see Appendix C.5)
CIRES	Cooperative Institute for Research in Environmental Sciences, University of CO and NOAA
CROSS	Caltech Remote Observatory Support System (see Appendix C.5)
DBMS	Database Management System
DMA	Defense Mapping Agency, Dept. of Defense
EDBD	Environmental Data Base Directory
EDIS	Environmental Data and Information Service
ENDEX	Environmental Data Index, EDIS
GPA	Geophysical Abstracts
GPS	Global Positioning System, NAVSTAR (see Appendix A.1)
GRA	Government Reports Announcements
GRB	Geophysics Research Board, NRC, NAS
GSFC	Goddard Space Flight Center, NASA
IAG	International Association of Geodesy
ICSU	International Council of Scientific Unions
ISC	International Seismological Centre

IUGG	International Union of Geodesy and Geophysics
IUGS	International Union of Geological Sciences
JILA	Joint Institute for Laboratory Astrophysics, University of CO and National Bureau of Standards
JPL	Jet Propulsion Laboratory
MIT	Massachusetts Institute of Technology
NAS	National Academy of Sciences
NGS	National Geodetic Survey, NOAA
NGSDC	National Geophysical and Solar-Terrestrial Data Center
NOAA	National Oceanographic and Atmospheric Administration
NRC	National Research Council
NRL	Naval Research Laboratory, Dept. of Defense
NSF	National Science Foundation
NSSDC	National Space Science Data Center
NSWC	Naval Surface Weapons Center, Dept. of Defense
OASIS	Oceanic and Atmospheric Scientific Information System
OSTA	Office of Space and Terrestrial Applications, NASA
OSTP	Office of Science and Technology Policy, Executive Office of the President
POLARIS	POLar-motion Analysis by Radio Interferometric Surveying, NGS
SCARLET	Southern California Array for Research on Local Earthquakes and Teleseisms
TIM	Terminal Interface Module, CROSS
USGS	United States Geological Survey
USNO	United States Naval Observatory, Dept. of Defense
UT1	Universal Time
VLBI	Very Long Baseline Interferometry