NASA Technical Memorandum 81438

NUMERICAL CALCULATION OF STEADY INVISCID FULL POTENTIAL COMPRESSIBLE FLOW ABOUT WIND TURBINE BLADES

(NASA-TM-81438) NUMERICAL CALCULATION OF STEADY INVISCID FULL POTENTIAL COMPRESSIBLE FLOW ABOUT WIND TURBINE BLADES (NASA) 11 p HC A02/MF A01 CSCL 10B
N80-18497
Unclas
G3/42 47411

Djordje S. Dulikravich
Lewis Research Center
Cleveland, Ohio

MAR 1980
RECEIVED
NASA STI FACILITY
ACCESS DEPT.

Prepared for the
Wind Energy Conference
cosponsored by the American Institute of Aeronautics and Astronautics
and Solar Energy Research Institute
Boulder, Colorado, April 9-11, 1980

NUMERICAL CALCULATION OF STEADY INVISCID FULL POTENTIAL COMPRESSIBLE FLOW ABOUT WIND TURBINE BLADES

Djordje S. Dulikravich*

National Aeronautics and Space Administration
Lewis Research Center
Cleveland, Ohio

E-361

Abstract

The air flow through a propeller-type wind turbine rotor is characterized by three-dimensional rotating cascade effects about the inner portions of the rotor blades and compressibility effects about the tip regions of the blades. In the case of large rotor diameter and/or increased rotor angular speed, the existence of small supersonic zones terminated by weak shocks is possible. An exact nonlinear mathematical model (called a steady Full Potential Equation - FPE) that accounts for the above phenomena has been rederived. An artificially time dependent version of FPE was iteratively solved by a finite volume technique involving an artificial viscosity and a three-level consecutive mesh refinement. The exact boundary conditions were applied by generating a boundary conforming periodic computation mesh.

Nomenclature

a	speed of sound
C_j	correction to the absolute velocity potential at point j
D	Jacobian = det $[J]$
h	specific static enthalpy
I	rothalpy = $h + \left(\vec{V}_r \cdot \vec{V}_r - \Omega^2 r^2\right)/2$
$[J]$	geometric transformation matrix
M_r	relative Mach number = $\lvert\vec{V}_r\rvert/a$
Q	$= \left(\vec{V}_r \cdot \vec{V}_r - \Omega^2 r^2\right)/2$
q_r	the relative air speed = $\lvert\vec{V}_r\rvert$
R_j	residue of the full potential equation at point j
$\vec{r}$	position vector in the rotor plane (y,z)
S	specific entropy
s,n,m	orthogonal relative streamline aligned coordinate system
T	absolute temperature of the air
τ	artificial time
U_r,V_r,W_r	modified contravariant relative velocity components in X,Y,Z space
$\vec{V}_r$	the relative velocity vector
$\vec{V}$	the absolute velocity vector = $\vec{V}_r + \vec{\Omega} \times \vec{r}$
X,Y,Z	global boundary conforming coordinate system in computational space
$\bar{X},\bar{Y},\bar{Z}$	local coordinates in each computational cell in the computational space
φ	absolute velocity vector potential
Ω	angular rotor speed = const.
ω	over-relaxation factor

*National Research Council - NASA Research Associate; member AIAA.

AIAA Paper No. 80-0607.

Introduction

The overall efficiency of the propeller-type wind turbines (Fig. 1) presently used for the production of electric energy can be significantly improved through various aerodynamic modifications. One of the basic disadvantages of all the theories used for the design and analysis of blade shapes is that they include linear and often semi-empirical approximations and corrections when accounting for the nonlinear effects of compressible three-dimensional rotating cascade flow.

The purpose of this paper is to present a numerical method for solving an exact three dimensional full potential equation that models the inviscid, irrotational, homentropic flow of a compressible fluid through an arbitrarily shaped isolated rotor. This work is based on the principles used in external transonic aerodynamics[1,2,3] and represents an extension of the authors research[4,5,6] in the field of potential transonic axial turbomachinery flows.

The Mathematical Model

The derivation of the governing equations is based on the following assumptions. Assuming that the rain drops, snow flurries, atmospheric ice particles, industrial pollutants, sand and dust are uniformly distributed throughout the air volume and that their total volume and mass are negligible, the atmospheric air can be treated as a homocompositional fluid. In addition, it is necessary to assume that the air is inviscid and that the atmospheric turbulence and disturbances due to the presence of a tower and a ground are negligible.

Then the full potential equation can be obtained from the following analysis. If the oncoming airstream is axisymmetric with respect to the axis of rotation and the rotor angular speed Ω is constant, the problem becomes a steady one when expressed in terms of coordinates (x,y,z) fixed for the blade (Fig. 1).

If $\vec{V}_r$ is the relative velocity vector of the air with respect to the blade, $\vec{r}$ is the position vector in the plane of rotation and $\vec{\Omega}$ is the angular velocity vector of the oncoming flow, then

$$\vec{V} = \vec{V}_r + \vec{\Omega} \times \vec{r} \tag{1}$$

is the absolute velocity vector. Then the sum of inertia, centripetal, Coriolis and pressure forces is

$$\vec{V}_r \times (\vec{\nabla} \times \vec{V}) = \vec{\nabla} I - T\vec{\nabla} S \tag{2}$$

where T is the absolute temperature, S is the entropy and rothalpy I is defined[7] as

$$I = h + \frac{1}{2}\left(\vec{V}_r \cdot \vec{V}_r - \Omega^2 r^2\right) \tag{3}$$

where h is the static enthalpy. In order to be able to use a single variable, the so-called absolute velocity potential function $\varphi(x,y,z)$ where,

$$\vec{V} = \vec{\nabla}\varphi \tag{4}$$

the condition of irrotationality

$$\vec{\nabla} \times \vec{V} = 0 \tag{5}$$

must be satisfied throughout the flowfield.

For Eq. (5) to be satisfied, the rothalpy must be constant

$$\vec{\nabla} I = 0 \tag{6}$$

and the flow homentropic

$$\vec{\nabla} S = 0 \tag{7}$$

simultaneously everywhere in the flowfield.

Besides already mentioned assumptions and restrictions, Eqs. (6) and (7) imply that there should be no heat transfer between the blades and the air, boundary layer should not separate and all possible shock waves should be weak.

The flow at upstream infinity was assumed to be uniform, although, according to the analysis which was done in the earlier papers,[4,5] it is possible to introduce a two-dimensional potential vortex at $x = -\infty$.

The continuity equation,[7,4]

$$a^2 \vec{\nabla} \cdot \vec{V}_r - (\vec{V}_r \cdot \vec{\nabla}) Q = 0 \tag{8}$$

where a is the local speed of sound and,

$$Q = \frac{1}{2}\left(\vec{V}_r \cdot \vec{V}_r - \Omega^2 r^2\right) \tag{9}$$

can consequently be written[4,8] in its full potential form

$$a^2 \nabla^2 \varphi - (\vec{\nabla}\varphi \cdot \vec{\nabla}) \frac{1}{2} (\vec{\nabla}\varphi \cdot \vec{\nabla}\varphi) + 2(\vec{\nabla}\varphi \cdot \vec{\nabla})((\vec{\Omega} \times \vec{r}) \cdot \vec{\nabla}\varphi) - ((\vec{\Omega} \times \vec{r}) \cdot \vec{\nabla})((\vec{\Omega} \times \vec{r}) \cdot \vec{\nabla}\varphi) = 0 \tag{10}$$

This second order quasilinear partial differential equation of the mixed type was numerically solved using an iterative successive line over-relaxation technique. In order to account for the proper domain of influence in the case of locally supersonic flow, the FPE should be written in its canonical form[5]

$$\left(M_r^2 - 1\right)\varphi_{,ss} - \left(\nabla^2\varphi - \varphi_{,ss}\right) \doteq 0 \tag{11}$$

Here, (s,m,n) is an orthogonal coordinate system locally aligned with the relative velocity vector

$$\vec{V}_r = q_r \hat{e}_s = u_r \hat{e}_x + v_r \hat{e}_y + w_r \hat{e}_z \tag{12}$$

and $M_r = q_r/a$ is the local relative Mach number. Type dependent rotated finite differencing[1,4] was used for the discretization of Eq. (11).

The solution of this steady state equation (Eq. (11)) can be obtained as an asymptotic solution to an unsteady equation for the large time.[1,9] In order to accelerate the iterative solution process, but to avoid small time steps dictated by the numerical stability condition in the case of a truly unsteady FPE, a more general artifically time dependent form of Eq. (11) was used

$$\left(M_r^2 - 1\right)\varphi_{,ss} - \varphi_{,mm} - \varphi_{,nn} + 2\alpha_1\varphi_{,st} + 2\alpha_2\varphi_{,mt} + 2\alpha_3\varphi_{,nt} + \epsilon\varphi_{,t} = 0 \tag{13}$$

The consecutive iteration sweeps were considered as steps in an artificial time direction. The artificial time dependent derivatives in Eq. (13) were obtained by a careful arrangement of the absolute velocity potentials obtained from the two consecutive iteration sweeps. For example,[1,4] the central difference approximation of the second derivative in the s-direction, evaluated at the point (i,j,k), is

$$\left(\varphi_{,ss}\right)^E_{i,j,k} = \left(\varphi^0_{i+1,j,k} - 2\varphi_{i,j,k} + \varphi^+_{i-1,j,k}\right)\Big/(\Delta s)^2 \tag{14}$$

where $\varphi^0_{i,j,k}$ is the old value of the potential evaluated during the last iteration sweep, $\varphi^+_{i,j,k}$ is the new value of potential function evaluated during the present sweep and $\varphi_{i,j,k}$ is a temporary value on the line along which the relaxation is applied. The last term is defined[1] as

$$\varphi_{i,j,k} = \frac{1}{\omega}\left(\varphi^+_{i,j,k} - \varphi^0_{i,j,k}\right) + \varphi^0_{i,j,k} \tag{15}$$

where ω is the over-relaxation factor. Then Eq. (14) becomes

$$\left(\varphi_{,ss}\right)^E_{i,j,k} = \Big\{\left(\varphi^0_{i+1,j,k} - 2\varphi^0_{i,j,k} + \varphi^0_{i-1,j,k}\right) + \left(\varphi^+_{i-1,j,k} - \varphi^0_{i-1,j,k}\right) - 2\Big[\left(\frac{1}{\omega}\varphi^+_{i,j,k} + \left(1 - \frac{1}{\omega}\right)\varphi^0_{i,j,k}\right) - \varphi^0_{i,j,k}\Big]\Big\}\Big/(\Delta s)^2 \tag{16}$$

or

$$\left(\varphi_{,ss}\right)^E_{i,j,k} = \Big[\left(\varphi^0_{,ss}\right)^E_{i,j,k} + (\Delta t)(\varphi_{,t})_{i-1,j,k} - \frac{2}{\omega}(\Delta t)(\varphi_{,t})_{i,j,k}\Big]\Big/(\Delta s)^2 \tag{17}$$

By adding and subtracting $(\Delta t)(\varphi_{,t})_{i,j,k}$ from Eq. (17), we finally[4] get

ORIGINAL PAGE IS
OF POOR QUALITY

$$\left(\varphi_{,ss}\right)^{E}_{i,j,k} = \left(\varphi^{0}_{,ss}\right)^{E}_{i,j,k} - \frac{\Delta t}{\Delta s}\left(\varphi_{,st}\right)_{i-1/2,j,k} - \left(\frac{2}{\omega} - 1\right)\frac{\Delta t}{(\Delta s)^2}\left(\varphi_{,t}\right)_{i,j,k} \tag{18}$$

All the second derivatives in the full potential equation were evaluated using the type dependent finite difference approximations. This means that in a locally subsonic region ($M_r < 1$) central differencing (designated by the superscript E) was used, while in the case of a locally supersonic relative flow ($M_r > 1$) the rotated[1] upstream differencing was used (designated by the superscript H).

Computational Mesh

In order to apply the exact boundary conditions (with no approximation on the surface of the blade and a rotor hub) it is necessary to generate a computational mesh that will conform with these irregular solid boundary shapes. At the same time this mesh should be (preferably) periodic in the θ-direction, thus providing for an easy application of the periodicity conditions along the arbitrarily shaped periodic boundaries (lower and upper boundaries on Fig. 2).

Figure 2 represents such an irregularly shaped, non-orthogonal boundary fitted mesh on one of the x, θ; r = const. cylindrical computational planes that intersect the blade (see Fig. 3).

The mesh of Fig. 2 was generated using conformal mapping, elliptic polar coordinates and coordinate stretchings and shearings[4,5,6] as shown on Fig. 4.

For the purpose of finite differencing, each distorted mesh cell is separately mapped into a unit cube (Fig. 5) using local isoparametric trilinear mapping functions of the general form

$$b = \frac{1}{8}\sum_{p=1}^{8} b_p(1 + \bar{X}\bar{X}_p)(1 + \bar{Y}\bar{Y}_p)(1 + \bar{Z}\bar{Z}_p) \tag{19}$$

where subscript p refers to the value at the cube's corner, that is

$$\bar{X}_p = \pm 1 \qquad \bar{Y}_p = \pm 1 \qquad \bar{Z}_p = \pm 1 \tag{20}$$

and b stands for any of the following: x, y, z, φ.

Computational Space

Besides transforming the geometric parameters from the physical (x,y,z) into the computational (X,Y,Z) space, the same was done numerically with the governing full potential equation.

If

$$[J] = \begin{bmatrix} x_{,X} & x_{,Y} & x_{,Z} \\ y_{,X} & y_{,Y} & y_{,Z} \\ z_{,X} & z_{,Y} & z_{,Z} \end{bmatrix} \tag{21}$$

and

$$D = \det [J] \tag{22}$$

then the modified contravariant components[4] of the relative velocity vector are (see Eqs. (1) and (4))

$$\begin{Bmatrix} U_r \\ V_r \\ W_r \end{Bmatrix} = D[J]^{-1}\begin{Bmatrix} u_r \\ v_r \\ w_r \end{Bmatrix} = D[J]^{-1}\begin{Bmatrix} 0 \\ \Omega z \\ -\Omega y \end{Bmatrix} + D[A]\begin{Bmatrix} \varphi_{,X} \\ \varphi_{,Y} \\ \varphi_{,Z} \end{Bmatrix} \tag{23}$$

where

$$[A] = [J]^{-1}[J^T]^{-1} \tag{24}$$

The full potential equation, which can be written as

$$\left(a^2 - q_r^2\right)\left(\varphi^{H}_{,ss} - \varphi^{E}_{,ss}\right) + \left(a^2\nabla^2\varphi^{E} - q_r^2\varphi^{E}_{,ss}\right) = 0 \tag{25}$$

after division with $(-a^2)$ becomes

$$\frac{M_r^2}{Dq_r}\left([U_r V_r W_r]\{\nabla_{XYZ}\}\varphi_{,s}\right) - \left([\nabla_{XYZ}][A]\{\nabla_{XYZ}\}\varphi\right) \tag{26}$$

where

$$\varphi_{,s} = \frac{1}{Dq_r}[U_r V_r W_r][A]\{\nabla_{XYZ}\}\varphi \tag{27}$$

The full potential equation can also be written in its scalar form[4] (see Eqs. (8) and (23)) as

$$a^2\left(U_{r_{,X}} + V_{r_{,Y}} + W_{r_{,Z}}\right) - \left(U_r Q_{,X} + V_r Q_{,Y} + W_r Q_{,Z}\right) = 0 \tag{28}$$

The evaluation of all the finite difference approximations was done by the use of the following expressions:

$$\left(b_{,X}\right)_{i=1/2,j,k} = \pm\frac{1}{2}\left(b_{i\pm1,j,k} - b_{i,j,k}\right)$$

$$\left(b_{,X}\right)_{i,j\pm1/2,k} = \frac{1}{8}\left(b_{i+1,j,k} - b_{i-1,j,k} + b_{i+1,j=1,k} - b_{i-1,j=1,k}\right)$$

$$\left(b_{,X}\right)_{i,j,k\pm1/2} = \frac{1}{8}\left(b_{i+1,j,k} - b_{i-1,j,k} + b_{i+1,j,k=1} - b_{i-1,j,k=1}\right) \tag{29}$$

because the neighboring mesh points are spaced in each new direction (X,Y,Z) one unit apart. Here b stands for any of the following: x,y,z, U_r, V_r, W_r, Q, φ.

The analogous formulas are valid for the differences in the Y and Z directions.

On each column j = MAXY, discretization of the FPE leads to the set of nonhomogeneous, non-

linear, algebraic equations of the general matrix form

$$[B]\{C_j\} + \{R_j\} = 0 \tag{30}$$

Equation (30) was directly solved for the vector of corrections $\{C_j\}$ to the potential φ, where

$$C_j = \varphi^0_{i,j,k} - \varphi^+_{i,j,k} \tag{31}$$

Equation (25) was used for evaluation of tri-diagonal coefficient matrix $[B]$, while Eq. (28) was used for the evaluation of the residual vector $\{R_j\}$ which also incorporates an explicitly added artificial viscosity in conservative form.[2,3,4]

Programming Considerations

A computer program called WIND was developed on the basis of the previous analysis. The mesh generating portion of the code uses about 50% of the total high speed memory required by WIND and at the same time consumes less than 5% of the total CPU time required by WIND. Therefore, in order to save on computer storage and at the same time to provide the means of separately analysing the geometry, WIND was devided into two separate programs. The first portion of this code (WIND-01) generates the three-dimensional body fitted computational mesh. Actually, the first program generates three consecutively refined meshes and stores them on separate disks. The second portion of the program (WIND-02) reads these (x,y,z) coordinates into the high speed memory in such a way that only the data from three neighboring cylindrical computational planes (see Fig. 3) have to be stored in these arrays at one time.

The hub is defined as a doubly infinite circular cylinder. An arbitrary number of blades is allowed to be attached to the hub. The blades can have arbitrary taper, sweep, dihedral and twist angle and can be formed from an arbitrary number of different section shapes. The vortex sheet (in the case of a circulation that varies along the blade span) is assumed to leave the blade from the trailing edge and continues downstream without allowing for the roll-up process. The shape of the vortex sheet is arbitrarily prescribed and kept constant during the calculation. Therefore, the vortex sheet is allowed to be transparent, that is, it was not treated as a stream surface. The iteration sweeps start from the line of mesh points connecting the upstream infinity with the leading edge stagnation point (see Fig. 2) and proceed along the upper blade surface and then along the lower blade surface towards the trailing edge, relaxing φ on one line of the mesh points at a time. In this way the sweeping direction coincides with the main stream direction. Consequently, the artificial viscosity introduced by the upstream differencing (designated with the superscript H in Eq. (25)) will always have positive sign, thus making the scheme stable in the regions of locally supersonic flow.

After the iteration converges on the first (very coarse) mesh, the values of φ are interpolated onto the next finer mesh (having approximately eight times as many points as the first one), thus providing an improved initial guess for the iterative process on that mesh. The same procedure is repeated with the finest mesh after the process converges on the second mesh thus resulting in an accelerated iterative scheme.

Preliminary Results

In order to test the WIND program for a highly compressed relative flow, a two-bladed wind turbine rotating at 55 m.p.h. with on oncoming wind speed of 18 m.p.h. was studied. The geometric characteristics of this rotor are shown in Fig. 6.

The computation was performed on a single very coarse mesh, which consisted of 24×6 mesh cells for each two-dimensional plane (Fig. 2). The spanwise distribution had 6 mesh cells on the blade surface and 2 additional off the blade tip. After 60 iterations the relative Mach number distribution on the suction side of the blade surface was plotted (Fig. 7). This figure indicates that the compressibility effect increases significantly from hub to tip with the tip actually operating in transonic speed regime. Since such small number of iterations were performed and the computational mesh was so coarse, the results shown in Fig. 7 are preliminary ones.

Summary

A computer program was developed that numerically solves an exact mathematical model for three dimensional rotating steady flow through a propeller-type wind turbine rotor of arbitrary geometry. The air is assumed to be inviscid and compressible. This work uses the principles of modern computational aerodynamics and provides designers with a practical tool for determining more efficient aerodynamic shapes of wind turbine blades.

Acknowledgment

The author is thankful to the National Research Council for sponsoring and financing this post-doctoral research at the Computational Fluid Mechanics Branch of NASA Lewis Research Center. Special thanks are due to Ms. Janice Ballinger - Welsh, Ms. Gita Linn and Ms. Suzanne Terbrack for kindly reviewing the manuscript and typing the paper.

References

1. Jameson, A., "Transonic Flow Calculations," Lectures Presented at Von Karman Institute, March 11-15, 1976.

2. Caughey, D. and Jameson, A., "Numerical Calculation of Transonic Potential Flow About Wing-Fuselage Combinations," AIAA Paper 77-677, 1977.

3. Jameson, A. and Caughey, D., "A Finite Volume Scheme for Transonic Potential Flow Calculations," Proceedings of AIAA 3rd Computational Fluid Dynamics Conference, Albuquerque, New Mexico, June 27-28, 1977.

4. Dulikravich, D., "Numerical Calculation of Inviscid Transonic Flow Through Rotors and Fans," Ph.D. Thesis, Cornell University, January 1979.

5. Dulikravich, D. and Caughey, D., "Finite Volume Calculation of Transonic Potential Flow Through Rotors and Fans," to be published in AIAA Journal, 1980.

6. Dulikravich, D., "CAS2D: Computer Program for Planar Steady Potential Transonic Cascade Flows," to be published as NASA TP, 1980.

7. Wu, Chung-Hua, "A General Theory of Three-Dimensional Flow in Subsonic and Supersonic Turbomachines of Axial-, Radial-, and Mixed-Flow Types," NACA TN 2604, January 1952.

8. Caradonna, F. and Isom, M., "Subsonic and Transonic Potential Flow over Helicopter Rotor Blades," AIAA Journal, Vol. 10, No. 12, pp. 1606-1612, December 1972.

9. Garabedian, P., "Estimation of the Relaxation Factor for Small Mesh Sizes," Math. Tables and Aids to Comput., Vol. 10, 1956, pp. 183-185.

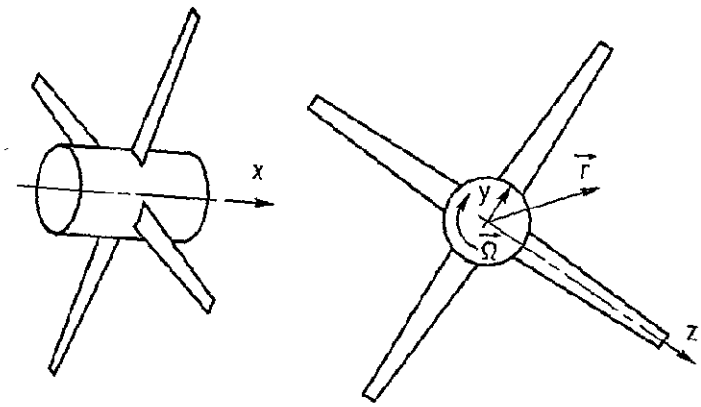

Figure 1. - The rotor in the physical space.

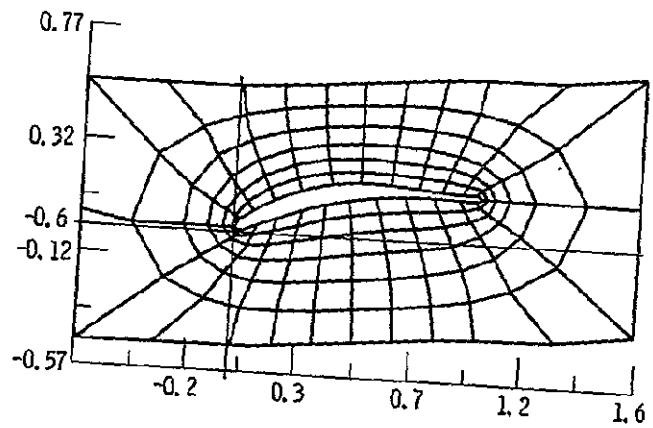

Figure 2. - Computational mesh in physical space (x, y, z).

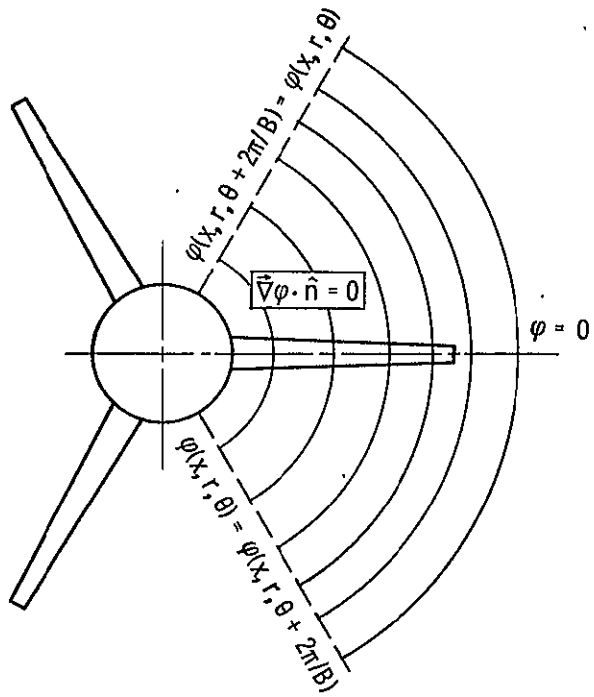

Figure 3. - Cylindrical computational planes and boundary conditions.

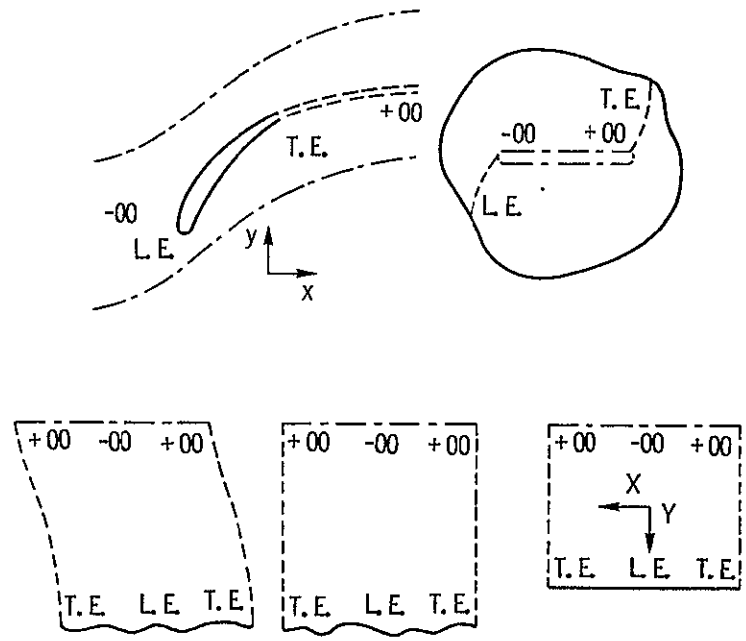

Figure 4. - Geometric transformation sequence.

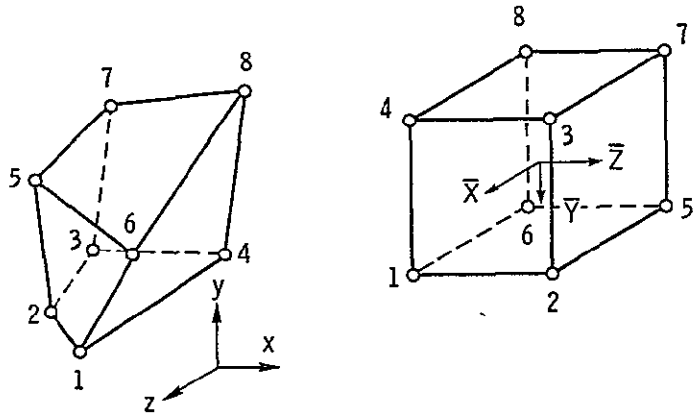

Figure 5. - Local isoparametric trilinear mapping.

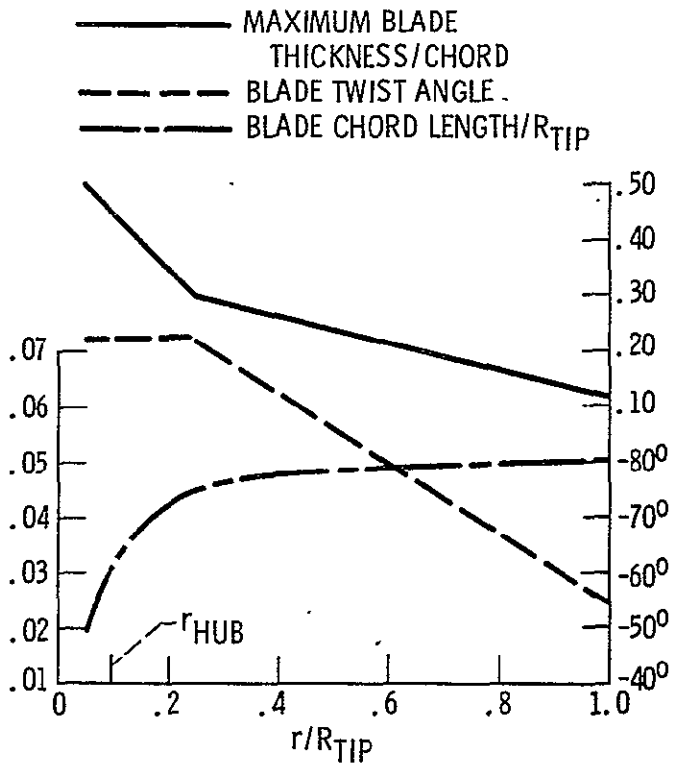

Figure 6. - Spanwise distribution of the blade geometric parameters. Airfoil section: NACA 2300 series; rotor diameter: 250 ft.

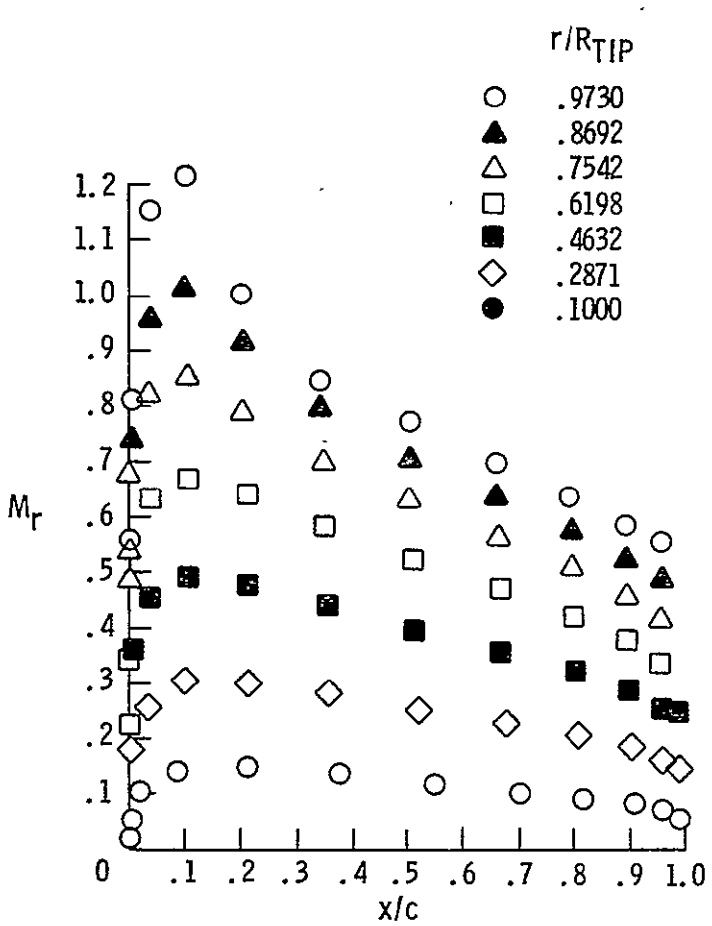

Figure 7. - Mach number distribution on the upper surface of the blade.

1 Report No	2 Government Accession No	3 Recipient's Catalog No
NASA TM-81438		

4. Title and Subtitle	5 Report Date
NUMERICAL CALCULATION OF STEADY INVISCID FULL POTENTIAL COMPRESSIBLE FLOW ABOUT WIND TURBINE BLADES	6 Performing Organization Code
7 Author(s) Djordje S. Dulikravich	8 Performing Organization Report No E-361
9. Performing Organization Name and Address National Aeronautics and Space Administration Lewis Research Center Cleveland, Ohio 44135	10 Work Unit No
	11 Contract or Grant No
12 Sponsoring Agency Name and Address National Aeronautics and Space Administration Washington, D.C. 20546	13 Type of Report and Period Covered Technical Memorandum
	14 Sponsoring Agency Code

15. Supplementary Notes

16. Abstract

The air flow through a propeller-type wind turbine rotor is characterized by three-dimensional rotating cascade effects about the inner portions of the rotor blades and compressibility effects about the tip regions of the blades. In the case of large rotor diameter and/or increased rotor angular speed, the existence of small supersonic zones terminated by weak shocks is possible. An exact nonlinear mathematical model (called a steady Full Potential Equation - FPE) that accounts for the above phenomena has been rederived. An artificially time dependent version of FPE was iteratively solved by a finite volume technique involving an artificial viscosity and a three-level consecutive mesh refinement. The exact boundary conditions were applied by generating a boundary conforming periodic computation mesh.

17. Key Words (Suggested by Author(s))	18 Distribution Statement
Numerical methods; Wind energy; Aerodynamic; Compressible flow; Cascade flow	Unclassified - unlimited STAR Category 42

19. Security Classif. (of this report)	20 Security Classif (of this page)	21 No of Pages	22 Price*
Unclassified	Unclassified		

* For sale by the National Technical Information Service, Springfield, Virginia 22161

National Aeronautics and
Space Administration

Washington, D.C.
20546

Official Business
Penalty for Private Use, $300

SPECIAL FOURTH CLASS MAIL
BOOK

Postage and Fees Paid
National Aeronautics and
Space Administration
NASA-451

U.S.MAIL

NASA

POSTMASTER: If Undeliverable (Section 158
Postal Manual) Do Not Return