(NASA-CR-159781) AERIAL APPLICATIONS DISPERSAL SYSTEMS CONTROL REQUIREMENTS STUDY Final Report (ORI, Inc.) 84 p HC A05/MF A01 CSCL 13B
N80-18586
Unclas
G3/45 47358

Aerial Applications Dispersal Systems Control Requirements Study

FINAL REPORT

By:
J.S. Bauchspies, W.L. Cleary, W.C. Rogers, W. Simpson & G.S. Sanders
(Agrinautics)

ORI, Inc.

Prepared For:

NATIONAL AERONAUTICS AND SPACE ADMINISTRATION

NASA Lewis Research Center
Contract NAS3-21714

NASA CR - 159781
ORI TR - 1686

Aerial Applications Dispersal Systems Control Requirements Study

FINAL REPORT

By:
J.S. Bauchspies, W.L. Cleary, W.C. Rogers, W. Simpson & G.S. Sanders
(Agrinautics)

ORI, Inc.

Prepared For:

NATIONAL AERONAUTICS AND SPACE ADMINISTRATION

NASA Lewis Research Center
Contract NAS3-21714

1 Report No	2 Government Accession No	3 Recipient's Catalog No
CR 159781		

4 Title and Subtitle	5 Report Date
Aerial Applications Dispersal Systems Control Requirements Study Final Report	15 February 1980
	6 Performing Organization Code
7. Author(s) J. S. Bauchspies, W. C. Rogers, W. Simpson, & W. L. Cleary & G. S. Sanders (Agrinautics)	8 Performing Organization Report No TR 1686
	10 Work Unit No
9 Performing Organization Name and Address ORI, Inc. 1400 Spring Street Silver Spring, MD 20910	11 Contract or Grant No NAS3-21714
	13. Type of Report and Period Covered Contractor Report
12 Sponsoring Agency Name and Address NASA Lewis Research Center 21000 Brookpark Road Cleveland, OH 44135	14 Sponsoring Agency Code

15 Supplementary Notes

Project Manager, Robert Baumbick, NASA Lewis Research Center, Cleveland, Ohio 44135

16 Abstract

Misapplication of various materials currently dispensed via agricultural aircraft can cause serious environmental problems as well as large economic losses to the grower and aircraft operator.

This report documents the study effort to establish control system requirements for projected future aerial liquid and dry dispersal systems. Using information concerning the performance deficiencies of existing dispersal system controls, the following five concepts were developed:

Concept 1 - End of field on/off control

Concept 2 - Manual control of particle size and application rate from the aircraft

Concept 3 - Manual control of deposit rate on the field

Concept 4 - Automatic alarm and shut-off control

Concept 5 - Fully automatic control

Detailed definition of each concept was provided, as was an approach for relevant research and technology programs.

17 Key Words (Suggested by Author(s))	18 Distribution Statement
Drift Dispersal Systems Flow Control Agricultural Dispersal Systems	Unclassified

19 Security Classif (of this report)	20 Security Classif (of this page)	21 No of Pages	22 Price*
Unclassified	Unclassified	76	

* For sale by the National Technical Information Service, Springfield, Virginia 22161

NASA-C-168 (Rev 10-75)

PAGE 72 INTENTIONALLY BLANK

PREFACE

This report on "Aerial Applications Dispersal Systems Control Requirements" presents the results of a study effort conducted under contract to the NASA Lewis Research Center to establish control system requirements for projected future aerial liquid and dry dispersal systems.

The analyses is based upon performance deficiencies of existing liquid and dry dispersal system controls which were identified in Task 1 of this effort and reported in ORI TM 120-79, Aerial Applications Dispersal Systems Control Requirements Study - Task 1 Report, August 1979.

The authors gratefully acknowledge the assistance provided by numerous persons during the preparation and analysis of this report. The critical review by George Sanders, Agrinautics, was especially valuable in identifying areas which required further definition in the report.

Data pertaining to the "Flying Flagman" as well as pictures used in the body of the report were provided by Del Norte Technology Incorporated. Of special assistance were George Sickler and Harry Mitchel.

Information on the Century Electronic Nozzle Monitor was provided by Mr. R. J. Campbell of Century Electronics.

PRECEDING PAGE BLANK NOT FILMED

TABLE OF CONTENTS

		Page
	LIST OF ILLUSTRATIONS	vii
	SUMMARY	1
I.	INTRODUCTION	3
	BACKGROUND	3
	SCOPE	4
	ORGANIZATION OF REPORT	8
II.	CONTROL SYSTEM DEFINITION	9
	INTRODUCTION	9
	CURRENT LIQUID DISPERSAL SYSTEMS	9
	PILOT CONTROLS	12
	PROPOSED ADDITIONAL DISPERSAL CONTROL EQUIPMENT	12
	END OF FIELD ON/OFF CONTROL	13
	SPRAY SIGHT	14
	BEGINNING AND END OF RUN MARKER	20
	ELECTRONIC POSITIONING EQUIPMENT	21
	CONTROL OF APPLICATION RATE AND PARTICLE SIZE	31
	APPLICATION RATE	31
	DEPOSIT RATE AND PARTICLE SIZE	38
	ENVIRONMENTAL DATA	39
	GEOMETRIC ACCURACY	40

PRECEDING PAGE BLANK NOT FILMED

LEAK AND CLOG DETECTOR 40
FULLY AUTOMATIC SYSTEM 42
FLIGHT PROGRAMMER 42
SOLID DISPENSERS 45
END OF FIELD ON/OFF CONTROL 46
AUTOMATIC CONTROL OF APPLICATION RATE AND PARTICLE SIZE 47
DEPOSIT RATE 47
LEAKS AND CLOGS 48
RESIDUE IN HOPPER 48
III. TECHNOLOGY PROGRAM DEFINITION 49
OVERVIEW OF PROPOSED PHASES 49
NEAR TERM ACTIVITIES 49
COMPONENT DEVELOPMENT 51
SYSTEM TECHNOLOGY DEVELOPMENTS 52
WORK BREAKDOWN STRUCTURE 53
PHASE 1.0.0.0 EQUIPMENT VALIDATION DEMONSTRATION 56
PHASE 2.0.0.0 COMPONENT DEVELOPMENT 58
PHASE 3.0.0.0 SYSTEM TECHNOLOGY DEVELOPMENTS 60
PROGRAM SCHEDULE 62
RESOURCES 62
IV. DISCUSSION OF RESULTS 69
V. CONCLUSION 71
REFERENCES 73
DISTRIBUTION LIST 75

LIST OF ILLUSTRATIONS

Tables		Page
1.1	Advanced Configurations in Each Improved Control System Concept	5
1.2	Additional Equipment for Advanced System Concepts	7
2.1	Overview of Optical Sights	15
2.2	Fully Automated Control System Cost Breakout	44
3.1	Resource Requirements by Center (Dollars in Thousands)	66
3.2	Resources Required By Task (Dollars in Thousands)	67
Figures		
1.1	Fully Automatic Control System	6
2.1	Typical Boom-Nozzle Liquid Dispersal System	10
2.2	Typical Boom-Nozzle Liquid Dispersal System	11
2.3	Limits of Planned U.S. LORAN-C Coverage	22
2.4	Flying Flagman™ L-R Indicator Light Bar	26
2.5	Principal Functional Elements of Electronic Positioning Device	27
2.6	Components of the Flying Flagman™	28
2.7	Flying Flagman™ Installed in Aircraft	28

2.8 End of Field On/Off Control Positioning Equipment 30
2.9 Simple Total Flow Regulator 33
2.10 Compensated Total Flow Regulator 34
2.11 Application Rate Elements 35
2.12 Compensated Pattern Regulator 43
3.1 Overview of Technical Plan 50
3.2 Work Breakdown Structure 54
3.3 Detailed Work Breakdown Structure 55
3.4 Equipment Validation 63
3.5 Component Development 64
3.6 System Technology Developments 65

SUMMARY

Misapplication of various materials currently dispensed via agricultural aircraft can cause serious environmental problems as well as large economic losses to the grower and aircraft operator.

This report builds upon the study effort conducted under Task 1 which established control system requirements for projected future aerial liquid and dry dispersal systems. Using these requirements, ORI identified performance deficiencies in existing dispersal system controls which resulted in the development of the following five dispersal control system concepts:

Concept 1 - End of field on/off control

Concept 2 - Manual control of particle size and application rate from the aircraft

Concept 3 - Manual control of deposit rate on the field

Concept 4 - Automatic alarm and shut-off control

Concept 5 - Fully automatic control.

Concept 1 consisted of a spray sight, powered control valve, and a coupled marker to facilitate more accurate turn-on and -off. The spray sight was added to give the pilot an aid currently not available to him, since he presently has no instrument or gauge to assist his timing of the dispersal system turn-on and -off. The powered control valve was added to give the pilot a positive indication of dispersal system turn-on and turn-off without the force and displacement required to move manual control valve levers as well as enabling a more predictable reaction time with high repeatability. The coupled marker was added to provide the pilot with an indication of his turn-on and turn-off accuracy. These modest approaches to improving the end of field on/off control were originally proposed on the basis that the cost of an electronic positioning device, currently on the market, might be prohibitive to the average operator.

However, because of concern that the accuracy obtained from the proposed end of field on/off control may not be sufficient to meet the operator's needs, a fully automatic electronic turn-on and turn-off system was evaluated. Such an electronic positioning device, coupled to the on/off activation switch, is reported as an alternative to the spray sight and marker system.

Concept 2 consists of adding direct readouts of application rate, discharged particle size, and mass offset or shift to the current dispersal system to enable the pilot to monitor and control the application rate and

particle size from the aircraft. Current practice dictates that the operator must tailor his dispersal system to his specific mission and application rate by choosing the number and location of nozzles to be used, their orifice size, pump pressure, swath width and flight speed on the ground. Once the dispersal system is configured, the pilot essentially flies the mission open loop. The addition of an application rate indicator and particle size indicator would provide the pilot a constant readout of application rate and droplet size to enable him to react to feedback from these two principal performance variables.

Concept 3, control of deposit rate, is considered beyond the state-of-the-art at the present time. This is because it is currently not possible for the pilot to obtain data on the actual amount of applied material deposited on the plants being treated and thereby advise the pilot of the necessary corrective actions that need to be taken. However, it is possible to inform the pilot of those parameters which influence the deposit rate and thereby enable him to make those corrective actions within his control.

Concept 4, the installation of alarms and automatic cutoff features, alerts the pilot when there is a malfunction in the system. With this feature, if the pilot does not choose to override the system, the spray is automatically cut off.

In Concept 5, the installation of a programmer enables the proposed control system to be fully automated.

The operational aspects of each of these additional features are discussed in detail as well as the specifications for the improved control configurations for both liquid and dry material dispensing systems. A research and technology program plan to provide the technology needed to develop the proposed improvements in dispersal system controls as well as a flight program to verify the benefits that could be achieved from use of the recommended improvements is also presented.

I. INTRODUCTION

BACKGROUND

Misapplication of many of the great variety of materials being dispensed by agricultural aircraft today can cause serious environmental problems as well as large economic losses to the growers and aircraft operators. Precision in the placement of herbicides and pesticides is necessary for the proper biological action of the applied material. Early activation or delayed shut-off of the dispersal system could result in not only chemical waste but the potential contamination of non-target areas such as adjoining crops or civilization. In addition to early activation or delayed shut-off, other causes of misapplication can be attributed to leaking dispenser systems and inaccurate chemical flow rates, as well as variations in wind conditions, aircraft speed and altitude, pilot alertness and skill, and terrain slope. It has been noted[1] that the variation tolerance between a dose of herbicide sufficient to control weeds and one that damages the treated crop may be in the order of ±20% from the recommended application rate. Considering that this country treats over 250 x 10^6 crop acres annually by air, the potential benefits to be derived from an improved Ag Air Dispersal Control system are considerable.

This report presents the results of a study effort conducted under contract to the NASA Lewis Research Center to establish control system requirements for projected future aerial liquid and dry dispersal systems. In Task I of this effort, ORI was joined by AGRINAUTICS, as subcontractor, to examine the dispersal system control problem in sufficient detail to identify the performance deficiencies of existing liquid and dry dispersal system controls.*

---

* The information developed during Task I is reported in ORI, TM 120-79, Aerial Applications Dispersal Systems Control Requirements Study - Task I Report; August 1979.

The scope of Task I was confined to the control of aircraft dispensing systems. This included deficiencies in application rate accuracy, droplet size control, positive turn-on and shut-off, application profile uniformity and swath width constancy. Problems associated with swath guidance as well as aircraft altitude and speed control were not addressed; however, sensing of aircraft ground speed, altitude, and rate of climb or descent were considered as they related to dispersal system control.

Using information concerning the performance deficiencies of existing dispersal system controls, five control system configurations were identified which were then presented to the NASA Program Manager according to priority of relative importance and feasibility.

These five concepts, identified by ORI, were:

Concept 1 - End of Field On/Off Control

Concept 2 - Manual Control of Particle Size and Application Rate from the Aircraft

Concept 3 - Manual Control of Deposit Rate on the Field

Concept 4 - Automatic Alarm and Shut-off Control

Concept 5 - Fully Automatic Control.

For each of these concepts, the Task I Report provided an overview and principles of operation as well as a schematic diagram which depicted the manner in which the proposed additional capabilities would relate to existing dispersal system controls.

SCOPE

Following presentation of the results of the Task I effort, the Government requested ORI to proceed with a detailed control system definition of Concept 5 (Fully Automatic Control). Since the various configurations proposed by ORI were modular in concept, with each succeeding concept incorporating the improvements envisioned for the one preceding (see Table 1.1), all sensors, controllers and actuators envisioned by ORI in the Task I Report fall within the scope of this effort. In identifying the overall capabilities of the components, such as range of sensed and manipulated variables, control computer capacity, required manual inputs, malfunction avoidance capability, and anticipated frequency and type of maintenance and adjustment, care was exercised to set up realistic requirements which are compatible with the needs of the application as they relate to acceptable initial cost, difficulty of adjustment and maintenance, and tolerance of the operating environment.

Figure 1.1 is a schematic diagram of the proposed Fully Automatic Control System concept. The additional equipment required for this concept is listed in Table 1.2. The order of the items in the table is such that one could draw a line with all equipment preceding being incorporated into

Table 1.1
Advanced Configurations in Each Improved Control System Concept

CONCEPT	GENERAL PROBLEM·	IMPROVED CONCEPT.	SYSTEM DEFICIENCY	ADVANCED CONFIGURATIONS·
1.	Large amount of spray is outside of field because of improper turn on/turn off	Improved turn on/turn off	Difficult to judge Difficult to control	Spray sight Length of run computer Powered control valve controller Coupled marker
2.	Dispersal is very inefficient (far from optimum)	Improved monitoring and manual control	Pilot doesn't know dispersal rate or particle size	Dispersal rate indicator Dispersal droplet size indicator
3.	Application is very inefficient (far from optimum)	Optimum monitoring of three parameters and manual control	Pilot doesn't know application rate or particle size	Application rate indicator Application droplet size indicator Geometric accuracy indicator
4.	Much misapplication is due to unnoticed changes in system and environment	Alarm and auto shutoff	Pilot has no critical alarms for system performance and reliability	Alarms — Three performance variables *Redundant monitoring* Leak/clog alarm
5.	All above and pilot workload	All above and automatic control for two principal performance variables	All above Pilot control of performance and monitoring of system reliability is nonoptimum	Automatic control of application rate Automatic control of application particle size

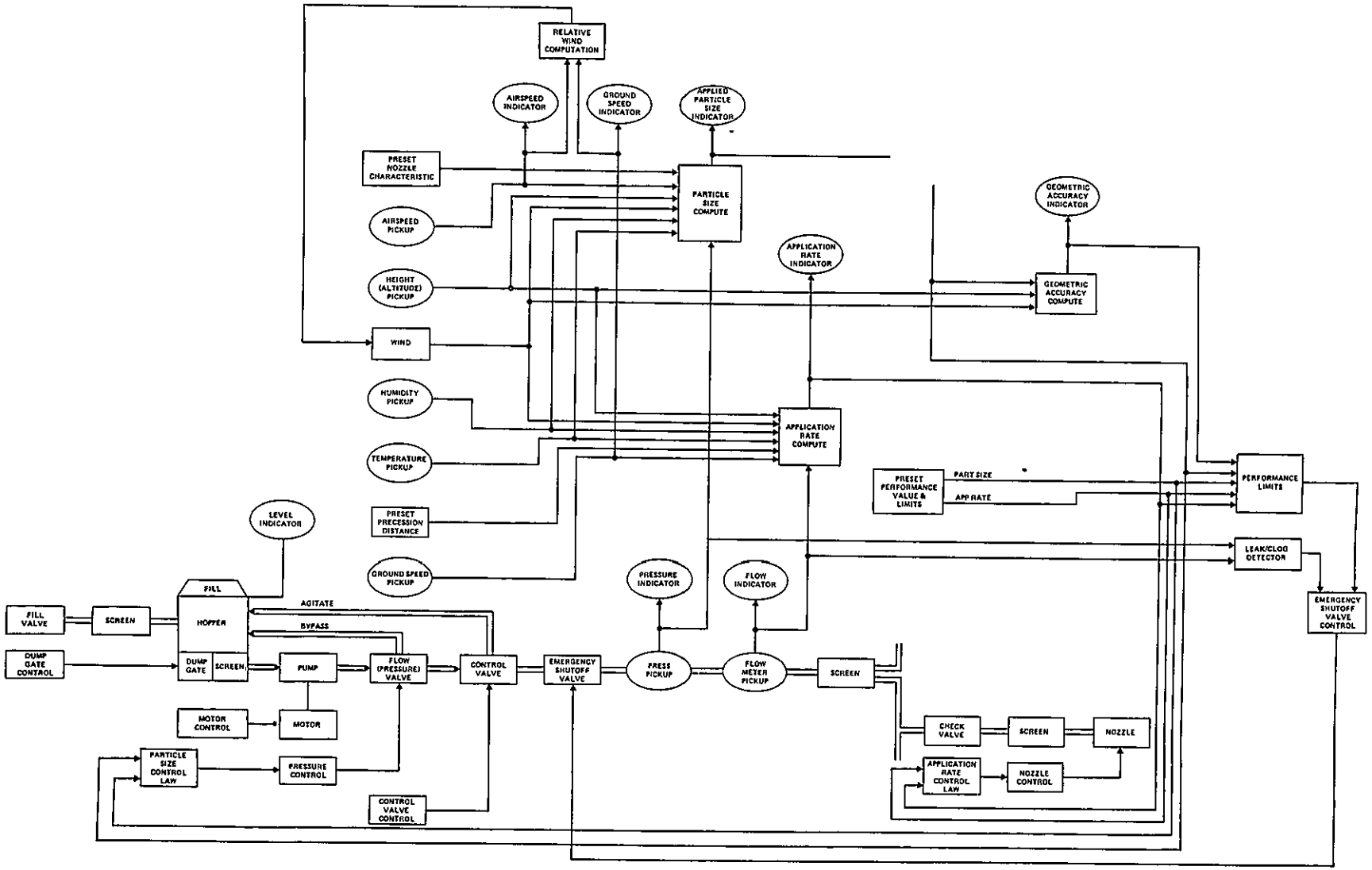

Figure 1.1
Fully Automatic Control System

Table 1.2
Additional Units Required for Advanced System Concepts

1. Spray Sight — a. optical unit
   b. sight computer

2. Powered Control Valve — a. electrical control valve[1]
   b. valve controller

3. Beginning and End of Run Marker — a. marker driver
   b marker[1]

4 Application Rate Indicator — a. application rate indicator
   b application rate computer
   c. swath spacing setting
   d flow rate transducer
   e ground speed computation

5 Dispersal Particle Size Indicator — a particle size indicator
   b particle size computer
   c nozzle characteristic setting
   d. pressure transducer[1]
   e. airspeed transducer[1]

6 Deposit Rate Indicator — All items of four above

   a. wind computer
   b. altitude transducers
   c. temperature transducers
   d humidity transducers

7. Deposit Particle Size Indicator — All items of five above

   a. wind computer
   b altitude transducers
   c temperature transducers
   d. humidity transducers

8. Geometric Accuracy — a particle size indicator
   b altitude
   c wind

9. Performance Alarms — a. emergency shutoff valve
   b emergency shutoff valve controller
   c particle size indicator
   d. application rate indicator
   e. geometric accuracy indicator
   f. performance limit checker

10 Leak & Clock Alarms — a. emergency shutoff valve
   b emergency shutoff valve controller
   c leak and clog detector
   d pressure transducer
   e flow transducer

11. Automatic Control of Application Rate — a. application rate indicator
   b application rate controller
   c. electrically controlled nozzle

12. Automatic Control of Particle Size — a. particle size indicator
   b particle size controller

[1]Frequently included in present dispersal systems

an improved control system concept. The order of the additional equipment is also indicative of the status of technology of the equipment envisioned. The lower numbered items are currently available and meet or could meet the needed requirements with minor improvements. The higher numbered items are essentially theoretical and will require R&D effort to bring to fruition.

ORGANIZATION OF REPORT

This report consists of five sections including this introduction. The second section provides a detailed definition of the Fully Automatic Control System Concept. Section III defines a proposed technology development and demonstration program for those components which are not likely to be available by 1985 and warrant separate development as components. In addition, system technology development and demonstration plans have been laid out for those configurations which warrant separate development as systems. Proposed schedules and sequences of events are presented as well as estimated cost of the programs. Section IV provides a Discussion of Results. Section V specifies four conclusions reached as a direct result of the subject effort.

II. CONTROL SYSTEM DEFINITION

INTRODUCTION

This section presents a detailed definition of the additional units needed to overcome deficiencies of existing state-of-the-art liquid and dry dispersal system controls. The need for these items was detected during a thorough analysis of the aerial application operation and documented in the Task I Report.* It is noted that several technological innovations, which are theoretical at the present time, have been included into the system. Proposed Research and Technology (R&T) programs for these items are discussed in Section III.

Current Liquid Dispersal Systems

Figure 2.1 shows a typical boom-nozzle liquid dispersal system currently in use, which can provide a wide range of application volumes and drop sizes depending upon the nozzle or other atomizer used. The system is shown schematically in Figure 2.2.

The hopper (A) is located in a space forward of the pilot and just aft of the engine. An emergency dump gate (B) is located under the hopper and is controlled by a lever located in the cockpit. A screen is located in the bottom of the hopper or at another position between the hopper and the point of entry into the pump. Here a large opening screen of 2-3 mm (6-8 mesh) is used to keep large pieces of rock, iron or other material from entering the pump.

---

*The information developed during Task 1 is reported in ORI, TM 120-79, Aerial Applications Dispersal System Control Requirements Study - Task I Report, August 1979.

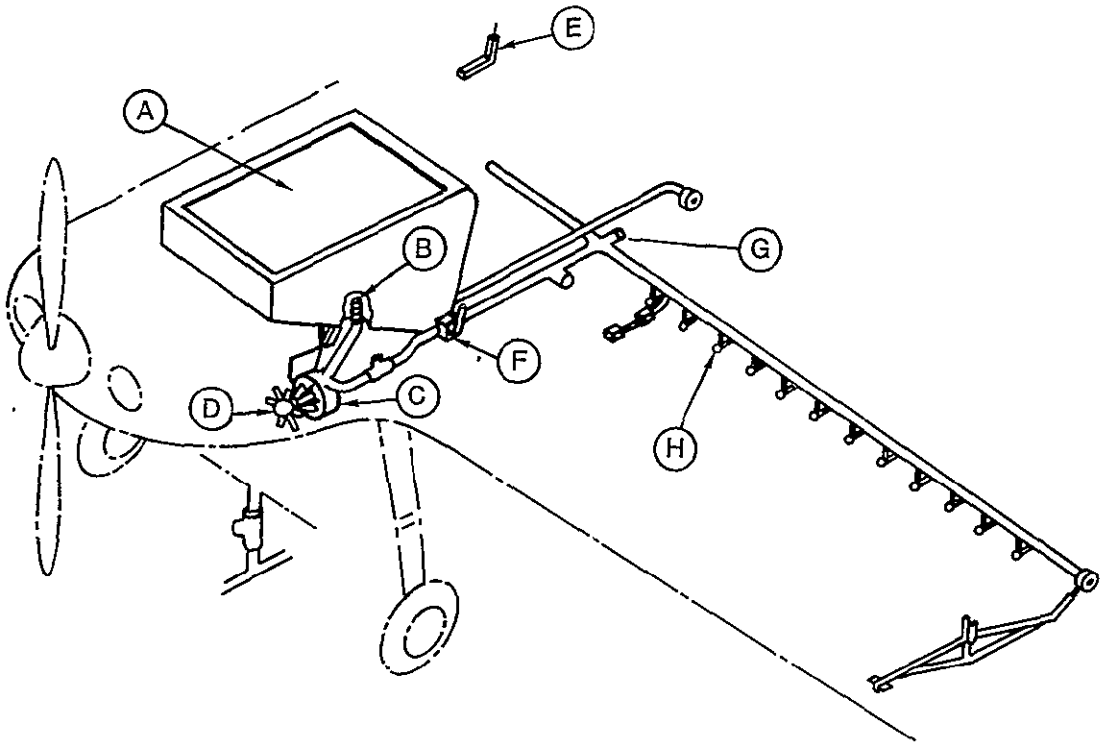

Figure 2.1
Typical Boom-Nozzle Liquid Dispersal System

The pump (C) which drives the liquid from the hopper to the nozzles, can be driven by a propeller in the aircraft slip stream (D) or electrically. A brake with a cable and control (E) is sometimes used to stop the rotation of the pump; however, in practice the pump is generally allowed to operate continuously, and when not spraying the fluid is recirculated into the hopper for agitation.

The control valve (F) is usually* operated by a positive cable-control lever in the cockpit but may be operated electrically or hydraulically. A flow-control screw in the value can be used to limit the flow back to the tank.

A second screen (G) especially adapted for aircraft installation, serves the two functions of sieving out particles that might plug nozzles and check valves and as a junction for the flow system from the pump to the two sections of the boom. The screen can be readily removed for frequent cleaning, and the mesh size can be changed to suit the nozzle orifices -- smaller nozzles requiring smaller screens for protection against plugging.

---

*Approximately 75% of the current dispersal systems use the manual control lever.

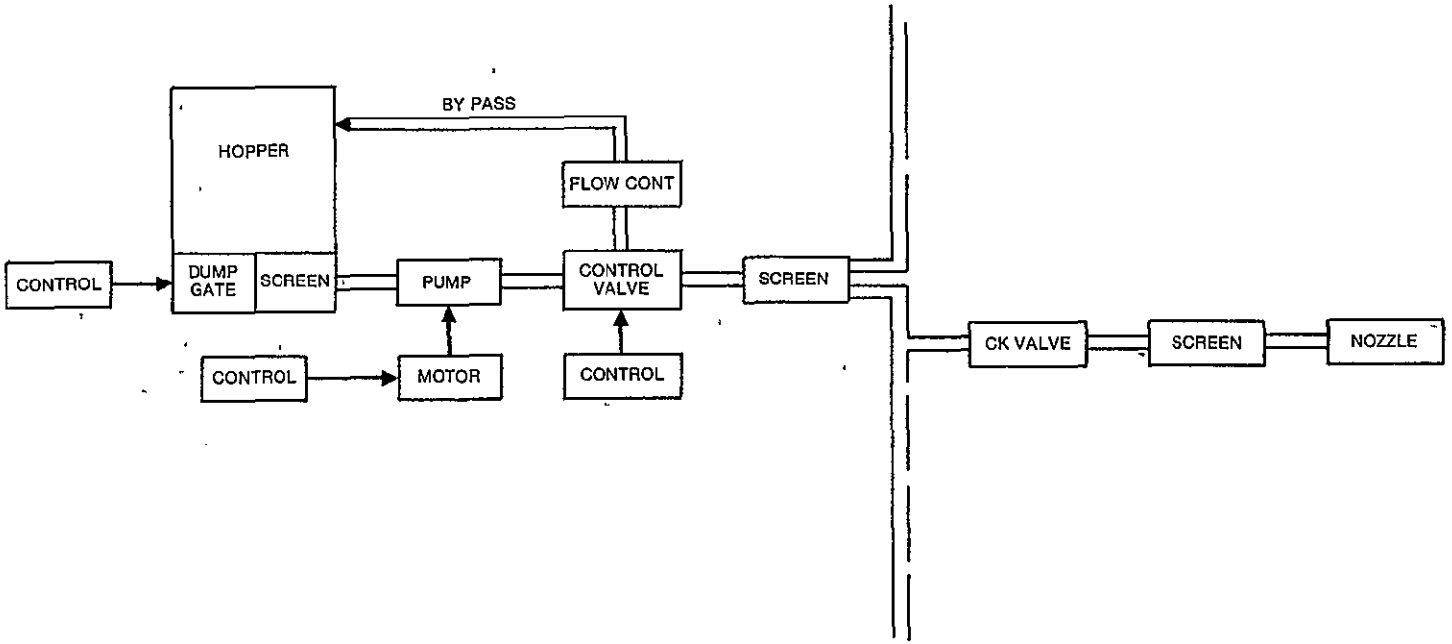

Figure 2.2
Typical Boom — Nozzle Liquid Dispersal System

A check control valve is used to prevent emptying of the spray boom by the suck back feature of the control valve. Small screens are generally located at each nozzle (H) just ahead of the orifice and are the final point of clearance before the liquid is discharged past the nozzle orifice.

Pilot Controls

In addition to the very basic dispersal controls mentioned above, the installed avionics equipment in the ag aircraft is also very rudimentary with many of the aircraft equipped with only the minimum needle, ball and airspeed indicators. It is common for the aircraft not to have a two-way radio. By the nature of the task being performed, the pilot uses outside references for gauging his altitude, heading and the wind. Spraying operations are therefore generally conducted at a constant throttle setting with the only control exercised by the pilot being the turn-on and turn-off of the spraying system as the aircraft approaches the field boundaries.

Proposed Additional Dispersal Control Equipment

A spray sight, powered control valve, and a coupled marker were proposed in the Task I Report to facilitate more accurate turn-on and -off. The spray sight would give the pilot an aid currently not available to him. Except as noted below, he presently has no instrument or gauge to assist his timing of the dispersal system turn-on and -off. A powered control valve was added to give the pilot a positive indication of dispersal system turn-on and turn-off without the force and displacement required to move manual control valve levers. The powered control valve would be particularly advantageous to the pilot since he need not search for the lever during the more dangerous portions of his flight sortie. In addition, the powered control valve would enable a more predictable reaction time with high repeatability. The coupled marker would provide the pilot with an indication of his turn-on and turn-off accuracy. These modest approaches to improving the end of field on/off control were proposed on the basis that the cost of an electronic positioning device*, currently on the market, might be prohibitive to the average operator.

Comments from the NASA technical monitor revealed concern that the accuracy that could be obtained from the proposed end of field on/off control may not be sufficient to meet the operator's needs. It was further noted that a fully automatic electronic turn-on and turn-off system might be more appropriate. As such, an electronic positioning device, coupled to the on/off activation switch, was investigated and is reported in addition to the spray sight and marker system described in the Task I Report.

Direct readouts of application rate, discharged particle size, and mass offset or shift have been added to the current dispersal system to enable

*Estimated cost of the Del Norte "Flying Flagman" is $50,000.

the pilot to monitor and control the application rate and particle size from the aircraft. Current practice dictates that the operator tailor his dispersal system to his specific mission and application rate by choosing the number and location of nozzles to be used, their orifice size, pump pressure, swath width and flight speed. Once the dispersal system is configured, the pilot essentially flies the mission open loop. The addition of an application rate indicator and particle size indicator would provide the pilot a constant readout of application rate and droplet size to enable him to react to feedback from these two principal performance variables.

Control of deposit rate is beyond the state-of-the-art at the present time. This is because it is currently not possible for the pilot to obtain data on the actual amount of applied material deposited on the plants being treated. However, it is possible to inform the pilot of those parameters which influence the deposit rate and thereby enable him to make those corrective actions within his control.

It is also possible to install alarms and automatic cutoff features to alert the pilot when there is a malfunction in the system, and if the pilot does not choose to override the system the spray would be automatically cut off.

It is also possible to install a programmer which would enable the proposed control system to be fully automated.

Each of these additional features is discussed and the physical and operational aspects of each are described in the following sections.

END OF FIELD ON/OFF CONTROL

Currently the majority of the ag pilots rely upon their ability and judgment to determine when to turn their spray systems on and off. Assuming a spraying speed of 45 meters per second, a fraction of a second in anticipation or delay on the part of these pilots could cause them to miss their intended marks by several meters. To provide the pilot with a capability for greater accuracy and repeatability both spray sights and electronic positioning devices were investigated. Theoretically these devices would provide an immediate improvement over the grease mark or rivet the pilot currently uses as a reference; however, a flight program is suggested to determine the accuracy and repeatability that the sights would provide. These results should then be compared with the capabilities current systems offer. It is noted that one serious drawback to the optical sight is the availability of a definitive target for the pilot to sight on at each end of his run. The use of topographic features, e.g., the end of the field mentioned in the Task I Report, does not appear to offer a definitive enough target to maximize the potential advantages of the sight. A further disadvantage is diversion of the pilot's attention unless the sight is placed in a convenient location. From a practical standpoint, it appears the sight would require the pilot to increase his turn distance to enable him to line up with his target, hence increasing flying time for each run. Most pilots are not willing to accept this requirement unless it can be shown the benefits will outweigh the added cost.

However, to enable the pilot to achieve an accuracy of at least ±1 meter, an electronic positioning device, coupled to the spray system on/off control, is suggested to automatically turn-on and turn-off the spray system upon reaching the field boundary.

Spray Sight

The proposed spray sight consists of two units: an optical unit and a spray sight computer. The optical unit may be a simple fixed template or it may be variable depending upon preset conditions; it may be fixed to the windshield or window or it may be projected onto a heads up display; if variable, it may be adjusted directly by the pilot or controlled by the programmer.

Three alternative spray sight concepts were considered in this analysis: a simple fixed template, a mechanical sight, and a heads up display. An overview of these sights is shown in Table 2.1. They are discussed in greater detail below.

Simple Fixed Template. A simple fixed template attached to the windshield of the aircraft could provide an immediate improvement to the pilot in determining when to turn his spray system on or off. Unlike a grease mark or rivet or some other reference mark, simple ranging information could be incorporated into the template. The pilot could then more accurately determine the point at which to activate his spray system. The cost of such a sight is considered negligible. Pertinent features of this item are as follows:

Range of Sensed and Manipulated Variables. This is a passive sensing device in which the pilot determines range by interpolating between present ranging circles or indices incorporated into the template. Being fixed, the sight is not capable of accepting manual inputs and would require neither maintenance nor adjustment. The accuracy envisioned with this sight is ±30 meters at 300 meters. This accuracy is of course dependent upon a well defined target. One obvious disadvantage of the sight is the inability to adjust for windage; however, it is anticipated that the error induced from crabbing would be relatively small in view of the limits on wind at which spraying operations can be performed. Another disadvantage is the inherent difficulty of positioning the pilot so that he always receives the same sight picture. This ability is crucial to assure repeatability.

Visibility. The sight template should be of a size and composition for ease of operation yet not cause blind spots which would interfere with the pilot's capability to locate and identify obstacles which could prove a safety hazard during flight -- both traveling to and from the field to be sprayed and during spraying operations.

Materials. It is envisioned that the template would be of a transparent material which the pilot could see through without interference. Range markings would be in the form of circles of indices. The sights should have the capability of being illuminated for night operations.

Table 2.1
Overview of Optical Sights

Item	Range of Sensed and Manipulated Variables	Control Computer Capacity	Required Manual Inputs	Malfunction Avoidance Capability	Frequency & Type of Maintenance and Adjustments	Cost
OPTICAL SIGHT						
Fixed Template	Range ± 30m @ 300 m	N/A	N/A	Fixed Installation	N/A	Negligible
Mechanical Sight	Range ± 20m @ 300 m	N/A	Adjust for A/C Height and Speed	Extremely High	Adjust before each operation	< $50
Heads Up Display with Range Finder	Range ± 1m @ 300 m	N/A	Adjust for A/C Height and Speed	High	Check accuracy before first flight each day	$30,000
Electronic Positioning Equipment	Range ± 3m @ 80km		Signal from transponder location of end of field pts.	High	Built in test circuit	$50,000

Weights. The weight of the sight is considered to be negligible.

Division of Units. The range circles (graduations) would be as follows:

OUTER CIRCLE - 1 meter target at 100 meters
CENTER CIRCLE - 1 meter target at 200 meters.
INNER CIRCLE - 1 meter target at 300 meters.

Operational Specifications. The template would be fixed to the inside of the windshield of the aircraft and hence would not be subjected to environmental elements outside the aircraft. The template should be capable of withstanding discoloration due to temperature extremes from -20°C to +70°C.

Mechanical Sight. A mechanical sight, shock-mounted to the top of the firewall, would further increase the ability of the pilot to more accurately determine the point at which the spray system should be turned on and off. With this sight the pilot could preset the altitude and speed at which the spraying operations would be performed. The sight aperature would be adjusted to give a positive indication when the pilot had reached the point when he should activate his spray system. This would eliminate the need for the pilot to interpolate from preset ranging indices. This sight will require no additional R&T and could be made available for under $50. As with the template, however, it is suggested that a demonstration program be conducted to document the advantages to the operator in using this sight. Pertinent features of this item are as follows:

Range of Sensed and Manipulated Variables. As with the template, the only variable sensed by the mechanical sight is range. Once the speed and altitude information have been preset into the sight, it becomes a passive sensing device. The accuracy envisioned for this sight is ±20 meters at 300 meters or almost twice the accuracy of the fixed template. However, as with the previous sight, the accuracy is dependent upon the definitude of the target.

Required Manual Inputs. The pilot is able to preset the sight for the range at which the spraying run will be conducted. On approach this will require considerations of the altitude and ground speed of the aircraft.

Adjustment Required. After presetting the sights, but before actual spraying operations commence, the pilot would fly the spray pattern and mark the point at which the spray would be turned on and turned off (discussed below). No adjustment or input to the sight is envisioned during the spray run itself since such actions would interfere with the pilot's attention during the most critical portions of the operation.

Size. The sight should be as small as possible commensurate with ease of operation.

Weight. The sight should have an installed weight under one pound.

Visibility. The sight should be a fixed installation and produce a minimum amount of blind spots.

Division of Units. The sight should be capable of adjustment. Range marks should be in meters adjustable at 100 meters.

Operational Specifications. It is envisioned that the sight be mounted to the firewall inside the cockpit. It therefore would not be susceptible to fouling caused by spray or environmental conditions.

Heads up Display. This sight has the greatest potential capability and, of the sights investigated, is essential to a truly fully automatic system. Control of the sight would be incorporated into the pilot's control stick handle. Coupled with the sight would be a range finder. The pilot would sight his target before his final maneuver descending to spraying height to activate the system. Two options are possible with this system: a pilot activated system where the pilot would turn on the system upon reaching a predesignated distance from the end of the field and a fully automatic system. Cost of such a sight is envisioned as being in the range of $30,000. Most of the data for this sight would be gleaned from sights currently being developed for the military; however, a demonstration program should be conducted to verify the value of the equipment to the operator.

Range of Sensed and Manipulated Variables. The range finder would be capable of measuring range to the target of ±1 meter as the aircraft approaches the target. The heads up display would consist of a reticle that the pilot centers on the target by maneuvering the aircraft. The range finder is slaved to range to the target selected by the pilot. The range finder should be capable of operating at speeds from 40-120 meters per second (mps).

Required Manual Inputs. The pilot would activate the range finder by pushing an on/off button upon identifying the target in his sight reticle.

Malfunction Avoidance Capability. Malfunction in the sighting system would be determined by the pilot observing the location of his markers (described below).

Anticipated Frequency and Type of Adjustment. The pilot should check the range finder and sight before the first flight of each day by sighting on a target at a premeasured distance on his home field. Further adjustment to the sight should not be necessary.

Visibility. The heads up display should be such as to give the pilot a clear aiming point when sighting on the target with minimum blind spots. The range finder display would consist of a horizontal needle that moves from the full up position to the horizontal upon arriving at a pre-selected range. Simultaneously a light would flash to alert the pilot.

Sight Computer. A sight computer is envisioned for computing the time and distance for turn-on and turn-off of the spray system. This function could be performed by the pilot using a simple hand-held calculator or a

variation of a type E-6B dead reckoning computer. The calculator would take the inputs of altitude, air speed and wind and perform the simple geometry for determining the distance from the field boundary at which the spray should be turned on and off. Incorporated into this calculation would be the response time of the dispersal system (approximately 0.8 sec) and any other delay the pilot may wish to include to enable him to activate the system prior to beginning his final maneuver descending to spraying height or ascending for his next pass.

This function could also be performed by a central programmer. This would enable a fully integrated system which would take inputs from altitude and ground speed indicators and compute the range at which the spray should be turned on and off. A manually controlled system could be programmed to sound an alarm if the range should vary more than ± two (2) meters from the range set into the sight. The computer would also be able to store a preset field length or other selection of swath length, compute the time between turn-on and turn-off based upon ground speed input, and an alarm if the distance varies by more than ten (10) meters. An automatic shut-off could also be incorporated into the system.

The major difficulty with using the sight computer is obtaining accurate inputs. For example, the pilot currently gauges his altitude by looking out his window at some reference point, e.g., trees, buildings, roads, etc. The altimeter in his aircraft is based upon pressure altitude and is displayed in 100-foot increments. To determine height above ground would require knowledge of the field elevation, which is generally not known. It would be possible to install a digital altimeter but, if based upon the same pressure principle, would still require calibration for changes in atmospheric pressure as well as computation of height above the ground. A solution is the installation of a sonar device which would give accurate readings of the height above the ground.*

A second input affected by the pilot is ground speed, which may vary during the swath run. Speed is computed using the speed and direction of the aircraft and wind. Since the pilot usually maintains constant power, the aircraft's speed will vary considerably as the pilot performs the maneuvers to line up for each successive pass. Other factors influencing airspeed are the slope of the terrain being applied and obstacles that need to be avoided. Airspeed is also affected by the loss of weight carried as the agricultural material is dispensed and fuel is burned. The second variable is the wind. Currently the pilot gauges the wind by observing smoke, flags or other references outside the aircraft. Accurate wind measurement can be obtained from a ground station at the field which could be provided automatically by a transponder on the ground, which inputs the data directly to the central programmer described below.

---

*The cost of the sonar device is estimated at under $250.

Despite these inaccuracies, it is suggested that a hand calculator could provide immediate improvements without excessive cost to the operator, but may increase pilot workload as compared to present methods. With such a device, the operator would be able to compute the following functions:

Turn-on and Turn-off Computation. The pilot would input the direction and average speed of the aircraft and wind into the calculator which would then compute the average ground speed. Knowing the ground speed and the reaction time of the spray system, the distance from the field boundary at which the spray should be activated can be determined, but consideration must be given to expected variations in ground speed during approach and from beginning to the end of the swath run. In a similar manner, a delay in the system could be added to the computation to enable the pilot to activate or shutoff his spray prior to his maneuvers to begin or terminate spraying. Since the beginning and end of run marker driver would be activated at the same point as the spray, additional computations are not needed for this function.

Length of Run Logic. The length of run logic is a preset time between turn on and turn off of the spray system. The purpose is to avoid long overruns by preventing the spraying system from staying on beyond a preset distance. If the pilot knows the length of the run, he will preset this into the programmer which will compute the time based upon the ground speed previously calculated for the run. If the pilot does not know the length of the field, he can time the run and confirm the accuracy by examining his markers.

Range of Sensed and Manipulated Variables. Being a hand-held computer, no variables are sensed by the calculator.

Required Manual Inputs. The height above the ground at which the spray system would be activated and the height the spray would be applied would be entered into the computer in meters. The airspeed would be entered in knots and aircraft heading in degrees. Wind speed and direction would also be entered in knots and degrees. The length of the spray run would be entered in meters.

Adjustment Required. No adjustment in the sight computer is envisioned.

Size. The calculator should be small enough to fit into the pilot's pocket.

Weight. The weight of the calculator should be no more than 225 grams.

Visibility. The readouts of the calculator should be clear and readily distinguishable.

Division of Units. Range information should be given in meters.

Operational Considerations. The calculator would be carried by the pilot in the aircraft and hence should not be susceptible to environmental or operational considerations.

Beginning and End of Run Marker

The beginning and end of run marker consists of two elements: a marker driver and a marker. The marker is used to mark the beginning and end of each run so that the pilot can evaluate his performance. A system currently on the market, which could perform this function is the "Automatic Flagman."TM*

Marker Driver. The marker driver would be used to release the marker at the same time the spray is turned on or shut off. This would be accomplished by the pilot squeezing an activation trigger. For first runs the pilot would be able to disengage the spray and only the marker would be released enabling the pilot to determine the accuracy of his end of field turn-on and turn-off points. This function could also be built into a central programmer (described below).

Marker. The marker should consist of a biodegradable, highly visible material that accurately marks the point at which the spray begins and ends. The "Automatic Flagman",TM for example, consists of a tissue paper substance, weighted in the center, that ejects from a dispenser, opens, and lands in the center of the swath. Other marking systems were investigated, such as adding dye into the spray at the start and stop points, but were rejected on the basis that the pilot would experience great difficulty distinguishing one swath run from another. Minimum specifications for the marker are:

Accuracy. The marker must accurately locate (within 1 meter) the point at which the spray is turned on and turned off.

Size. The size of the marker should be such that it is clearly discernable from the air. (Paper streamers are currently on the market in various colors and lengths. A marker at least three meters in length and of a color that contrasts well from the crops being treated is required.)

Weight. The weight of the marker should be no more than 40 gms each.

Marker Dispenser. The marker dispenser must be able to hold a sufficient number of "markers" for adjusting the end of field on/off control as well as identifying the point at which the spray was turned on and off during each run without need to return for replenishment before the agricultural material is expended.

---

*The "Automatic Flagman"TM is produced by North American Industries, and sells for approximately $395. An installation kit, if needed, would run an additional $45.00. "Flags" cost approximately $42-48 a case (400 flags) depending upon size and color.

Electronic Positioning Equipment

Electronic positioning equipment is currently available and is being used on some aircraft for swath measurement* and maintenance of proper course. These equipment employ a variety of navigational concepts, e.g., LORAC, LORAN, DECCA, and RAYDIST. Three systems are discussed, LORAN-C, the proposed Global Positioning System (GPS), and the Del Norte Technology Incorporated "Flying Flagman"™.

LORAN-C. LORAN-C is a hyperbolic ground reference radio navigational system provided by accurately timed pulses transmitted in the frequency band of 90 to 110 KHz from a grouping of suitably located stations to form a LORAN-C chain. The pulse shape is such that 99 percent of the radiated energy is contained within the frequency band.[2] The chain is comprised of one master station and two or more secondary stations synchronized by a common timing reference and located in the same general geographic area. There are also usually one or two monitor stations associated with each station pair in the chain. The coverage area of a chain is determined by the transmittal power of each station and the geometry of the stations, i.e., the distance between them and their orientation. The Base Line is the geodesic line between two transmitting stations and is usually several hundred miles in length. Position location can be determined by making time difference (TD) measurements for two or more station pairs. The time difference is the time of arrival of a pulsed signal from a secondary station minus the time of arrival of the synchronized pulse signal from the master. Since the time difference represents the difference in propagation time from two stations, it determines a hyperbolic line-of-position (LOP), which is a line having constant difference of geodesic distance from two transmitting stations.

A series of tests were made[3] to determine the accuracy to which terrestial features could be located utilizing LORAN-C. Position location measurements using a 10-sample averaging capability in the receiver provided position information with a 24-meter certainty for stop-and-go type driving applications using a 100-sample averaging mode in the receiver, limited test results indicated that a 14- to 15-meter positioning capability may be achievable, but the 100-sample averaging technique could not yield 6-meter resolution in tests conducted in Springfield, Virginia. This, of course, is not sufficient to meet the needs of the agricultural aviation operators. Another disadvantage of the LORAN-C is that currently operational and planned LORAN-C stations through 1980 would still leave a large portion of the central United States uncovered (see Figure 2.3). The benefits that would accrue

---

* The accuracy obtainable using navigational aids such as LORAN for swath tracking is not sufficient to meet the demands of the ag operator. It is generally used in forestry service applications where accuracy of ±200 meters is considered acceptable.

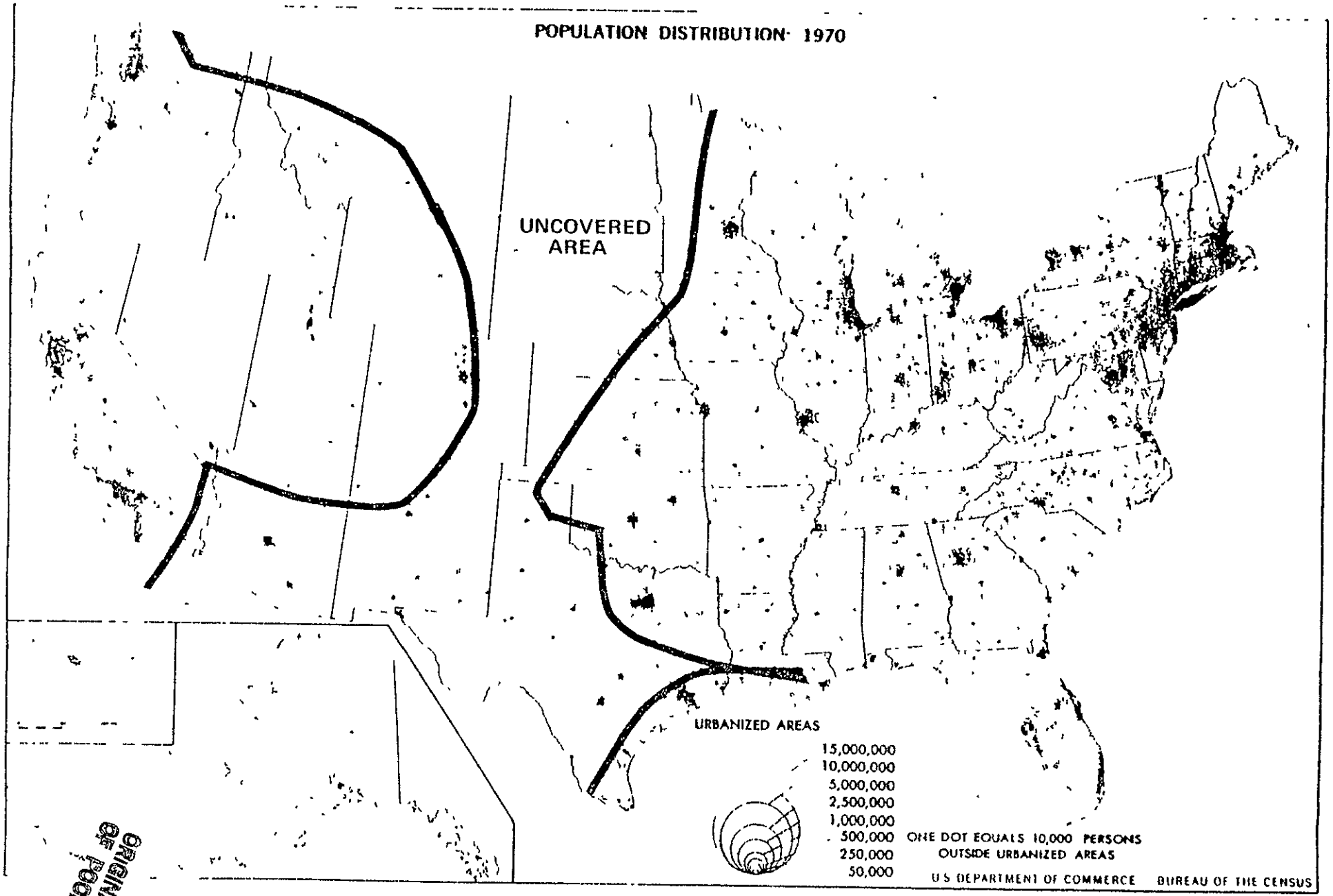

FIGURE 2.3 LIMITS OF PLANNED U.S. LORAN-C COVERAGE

ORIGINAL PAGE IS OF POOR QUALITY

to the United States from an improved and expanded LORAN-C network are documented in the ORI Technical Report 1104, Program Analysis in Mid-Continent LORAN-C Expansion, December 1976. Agricultural aviation is excluded on the basis that guidance signals are not expected to provide sufficient accuracy for ag aviation field spraying operations.*

NAV STAR Global Positioning System (GSP). The NAV STAR GPS is a new radionavigation system concept being developed by the Department of Defense. The objective of the program is to provide precise position information for a wide spectrum of military missions. Development of the system was initiated in December 1973 and is currently in the concept validation phase. If the program progresses as now planned, the operational system could provide full operational capability in 1984 and enable suitably equipped airborne, ship or ground users to obtain position information to an accuracy of about 10 meters (approximately 33 feet). The operational system will employ 24 satellites to provide worldwide coverage.

The principal advantage for potential civil use of the system is its planned capability to provide high accuracy position information on a worldwide coverage basis. The principal disadvantages as perceived at this time are the uncertainties of a developmental program and cost/availability of user equipment for civil applications. The user hardware development is oriented toward a design-to-cost goal of $25,000 per set for a military unit which included a receiver, control and display, power supply and processor. Other user equipment design-to-cost goals include $15,000 per set for a potential replacement for the ARN-118 TACAN for air navigation and $5,000 or less for the SPARTAN, a low-cost set with less position determination accuracy.

As with the LORAN-C system, the GPS positioning is not currently envisioned as providing the accuracy needed to meet the needs of the ag air community.

Flying Flagman.™ One item of electronic positioning equipment, currently on the market, and which appears to meet the needs of the ag operators is the Del Norte Technology Incorporated "Flying Flagman"™**. The principle of the "Flying Flagman" consists of measuring the line of sight distance from a master station to two remote stations. This is accomplished by measuring the round trip time for an RF signal transmitted from the master station (the aircraft) to each of the ground transponders. A digital distance measuring unit, working in conjunction with the master transponder, measures the length of time for this round trip signal and from it computes the range to each ground beacon. This information is then provided to a left-right computer which monitors all control box inputs, processes all the input data, and provides the outputs for the pilot's display and for tape recording in an ASC II Serial format.

---

*Interview W.E. Simpson, ORI and Mr. Farrell Higbee, NAAA, Executive Director; October 12, 1976.

**At one time Motorola planned to market an ag air electronic positioning device, the mini-ranger, but is not competing in the agricultural aviation market at the present time.

The pilot's display is an adaptation of the standard cross pointer indicator. A left-right needle is used by the pilot to maintain track. A horizontal needle is used to indicate the aircraft's approach to the start of a swath, end of a swath or any other point the pilot may wish to remember. A digital display reading in kilomaters is presented until 0.5 km from the desired point. During the last 0.5 km the horizontal needle moves from the full upward position to the horizontal position. Simultaneously a light on the cross pointer indicator is turned on to indicate arrival at the start point, end point, etc. This allows the pilot to concentrate on flying and gives him peripheral visual indication of time to open or close the spray controls. This feature is especially valuable when operating at night. The analog display has been found to be a better way of indicating closure than a rapidly changing digital presentation since such an indicator would require too much of the pilot's attention during this critical portion of the flight path.

The "Flying Flagman"™ remote transponders are able to service up to four aircraft at one time; however, each aircraft must be equipped with its own on-board electronic equipment. It would be possible for two aircraft to share a system by flying in formation, however, it would require a radio communication line for turn-on/shut-off or a data link to the second aircraft's on-board programmer.

Del Norte Technology, Inc. has stated that they have already developed the technology to fully automate the turn-on and turn-off of the spray system by coupling the powered control valve to the end of the field signal. Del Norte has further stated that they have not received much encouragement from the ag pilots for this feature since the pilots prefer to maintain positive control of the turn-on/turn-off function, and currently the software applies only to rectangular fields.

Proposed Electronic Positioning System. As described above, the Flying Flagman™ currently provides the ag operator with an electronic positioning system with an accuracy of ±3 meters. Drawbacks to this system are cost, positioning of remote transponders and a requirement to remain in line of sight with the transponders. (Blocking out the signal will shut down the system.) Despite these drawbacks, the system does provide the means to determine the advantages improved turn-on and turn-off could provide to the ag operator. One such benefit could be a reduction in liability insurance if it could be shown and documented that aircraft equipped with an electronic on/off control consistently put their material inside the field boundaries. The Flying Flagman™ also has the potential for automatic turn-on and turn-off of the spray system upon reaching the field boundaries as well as the capability to compute the aircraft's ground speed, an important input for determining application rate and deposit rate described below.

Since the gauges envisioned for the proposed electronic positioning system would most likely resemble those currently used by the Flying Flagman™, this system would also provide an available means for conducting human factors experiments for designing cockpit displays.

Areas that still need to be investigated are in the location of the L-R gauge and control panels. Del Norte has done some research in this area, for example, designing a light bar located outside the cockpit on the hood of the aircraft. (See Figure 2.4). This device was developed in response to a request for a means whereby a pilot could monitor the L-R needle with peripheral vision while keeping his attention out of the cockpit.

The Flying Flagman™ also meets the requirement that the proposed end-of-field positioning system should be suitable for operation in production of agricultural aircraft with minimum modification and cost as well as minimum operational penalty. That is, it should be small and lightweight, easy to operate and ruggedized to withstand operational and environmental conditions.

Figure 2.5 illustrates the principal functional elements of the Flying Flagman™ electronic positioning device. These elements consist of:

- Ground Stations (minimum of two)
  - Transponder
  - Antenna
  - Power Supply
- Airborne Positioning Equipment
  - Master Transponder
  - Digital Distance Measuring Unit (DDMU)
  - DDMU Control Panel
  - Pilot's L-R Control Panel
  - Steering Indicator
  - Power Supply
  - Antenna

The equipment is shown in Figure 2.6 and installed in a cockpit in Figure 2.7. The system should meet the following specifications:

Range of Sensed and Manipulated Variables. The system should have an operating range of up to 80 kilometers line of sight from the remote transponder locations. At 80 km the range accuracy should be ±3 meters (±1 meter desired). The system should be capable of operation at any height above 2 meters with no loss in range accuracy. The pilot should have the capability of selecting variations of flight paths to include long straight tracks, multiple parallel tracks, oval patterns and circular patterns. Spacing between flight paths should be selectable, from 1.0 meter to 300 meters. Lateral accuracy between paths should be at least ±2 meters (±1 meter desirable).

Required Manual Inputs. The system should be capable of orientation either by entering preset coordinates of surveyed remote station locations into the computer or by the pilot flying a baseline between the two remote stations. The system should be capable of entering the location of the end of field boundaries into the positioning device with no more difficulty than

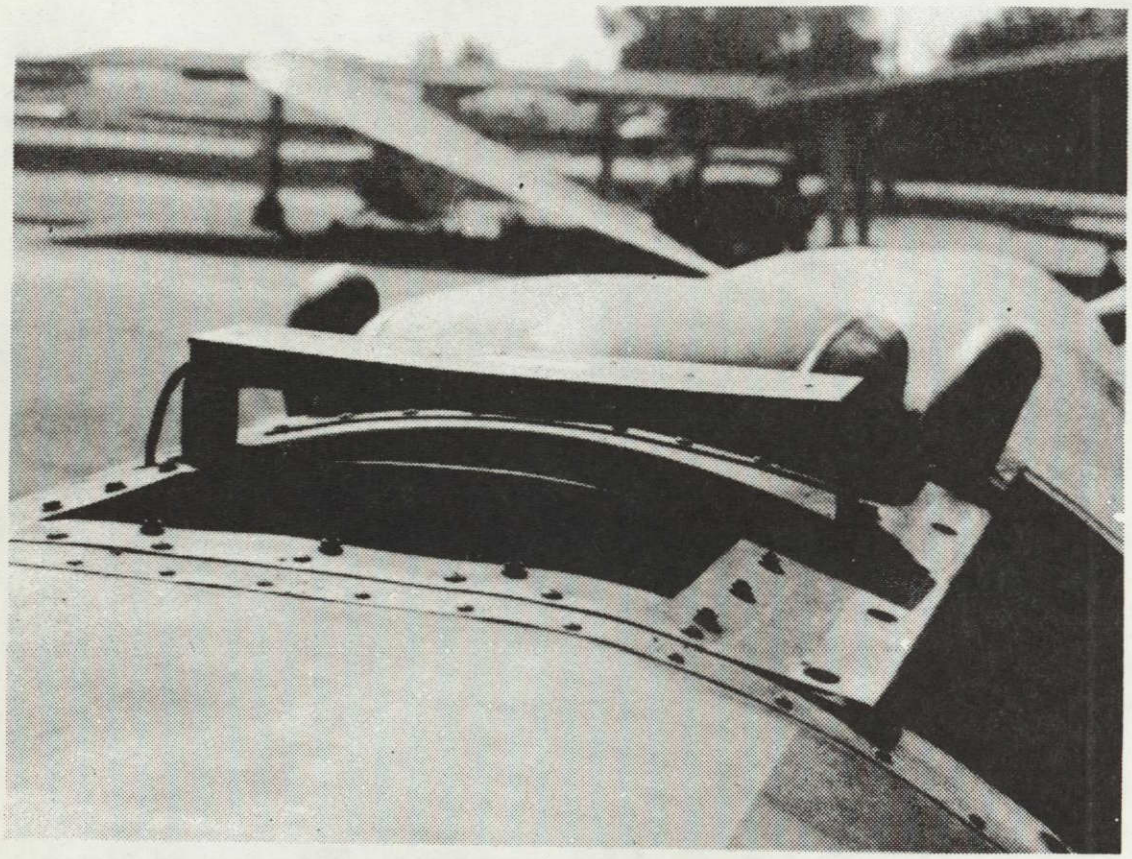

Figure 2.4
Flying Flagman™ L-R Indicator Light Bar

ORIGINAL PAGE IS
OF POOR QUALITY

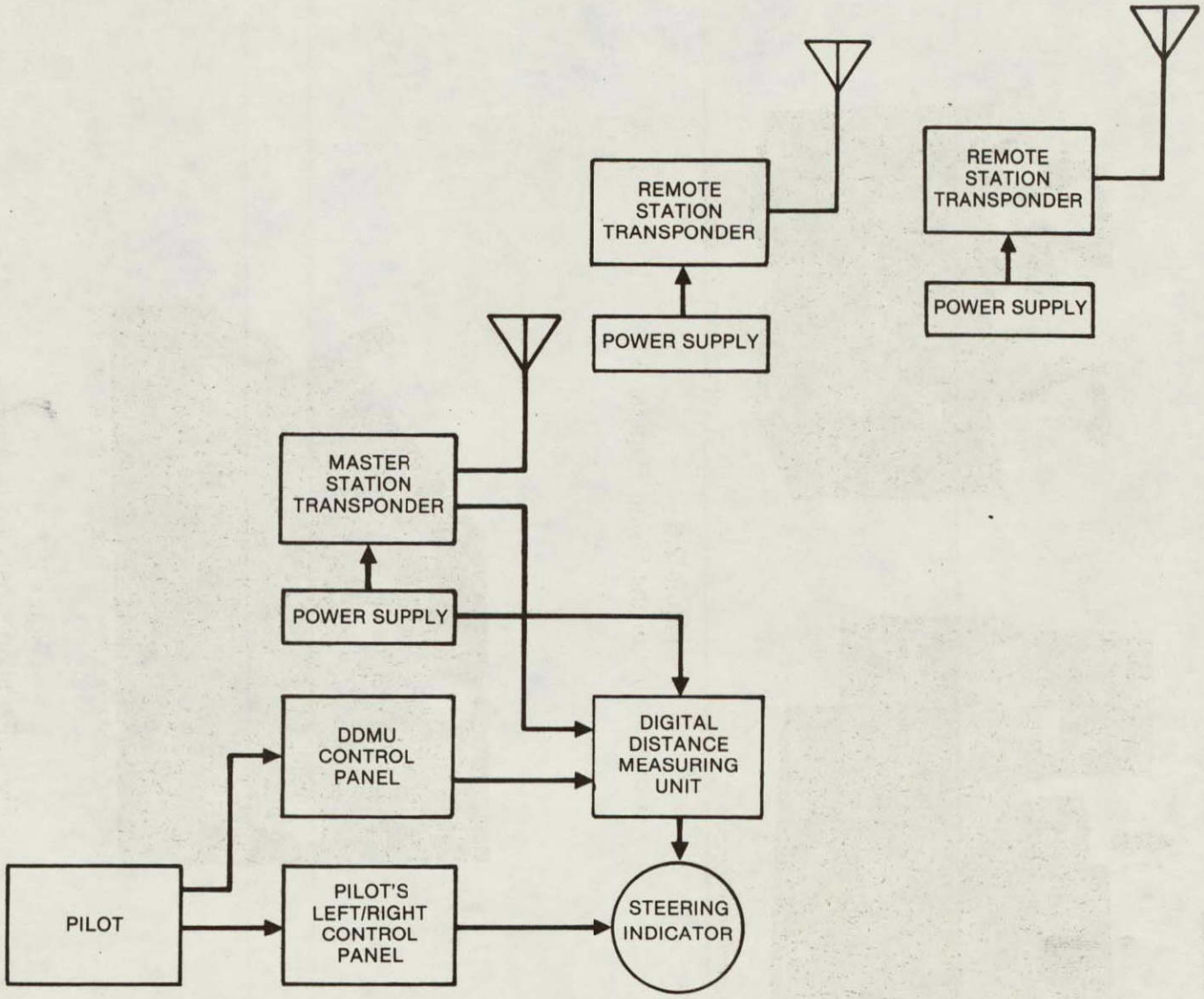

Figure 2.5
Principal Functional Elements of Electronic Positioning Device

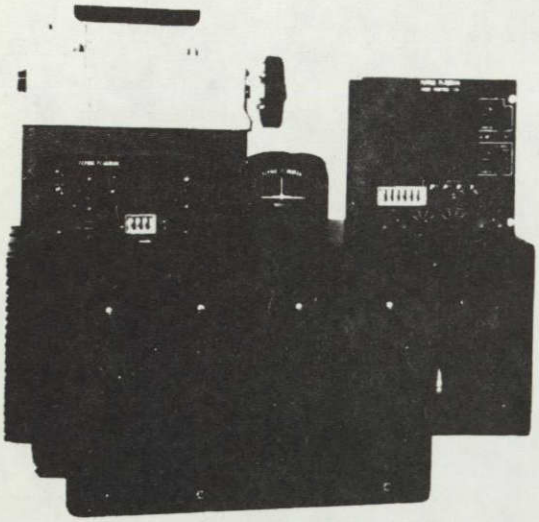

Airborne Equipment

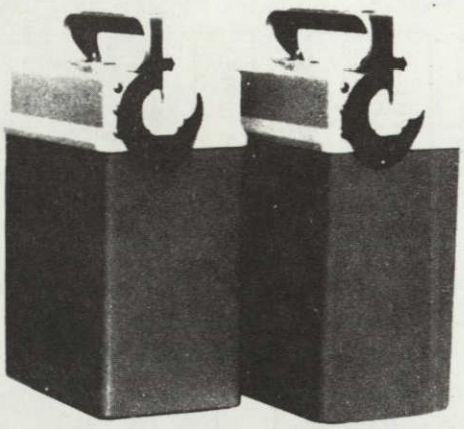

Ground Station Transponders

Figure 2.6
Components of the Flying Flagman™

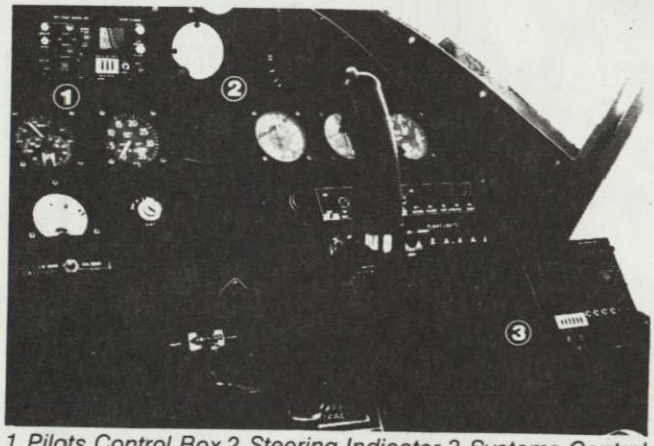

1. Pilots Control Box 2. Steering Indicator 3. Systems Control.

Figure 2.7
Flying Flagman™ Installed in Aircraft

ORIGINAL PAGE IS
OF POOR QUALITY

the pilot flying over the boundary and pressing a button as he reaches the beginning and end points (see Figure 2.8). The pilot should be capable of identifying the first swath either by inserting the X and Y coordinates of the end points (if known) into the computer or by flying the first swath and indicating the end points by keying the computer as the field boundary is crossed.

Malfunction Avoidance Capability. The system should have a built-in test capability to enable the operator to check out the equipment quickly and detect any malfunction immediately.

Difficulty of Adjustment and Maintenance. The system should be capable of one button operation while in flight.

Interference. The system should create no resonant frequencies.

Size. The system should be as small as practicable commensurate with ease of operation. The installed weight of the system should not exceed 20 kg.

Power Required. The airborne equipment should be capable of operating using its own power supply. The remote transponders should be capable of operation on batteries of 115V ac input.

Powered Control Valve. The powered control valve is a state-of-the-art item of equipment consisting of two elements: an electrical control valve and a valve controller. The powered control valve is found in approximately 25% of the present dispersal systems and enables the spray system to be turned on and turned off with no more difficulty than pushing a button or throwing a switch. The valve controller takes the signal from the pilot or programmer and either turns the spray system on (at which time the agricultural material is allowed to flow from the hopper to the nozzles), turns the spray off (at which time the flow to the nozzles is diverted back to the hopper where it is agitated), or shuts down the system (at which time there is no flow at all).

Electrical Control Valve. The control valve is usually operated by a positive cable-control lever in the cockpit, but may be operated electrically or hydraulically. For a fully automatic control system an electrically operated control valve, activated by command from the valve controller, is required.

There are many electrical control valves on the market today. The system is relatively easy to install and the estimated cost to convert from a manual system to the powered control valve is ≈$150-250. Power control valves are also offered as optional equipment in new ag aircraft and may run as high as $400 factory installed.

The powered control valve is normally activated by a switch built into the control stick handle or some other convenient location. Power for the system is taken directly from the aircraft electrical system.

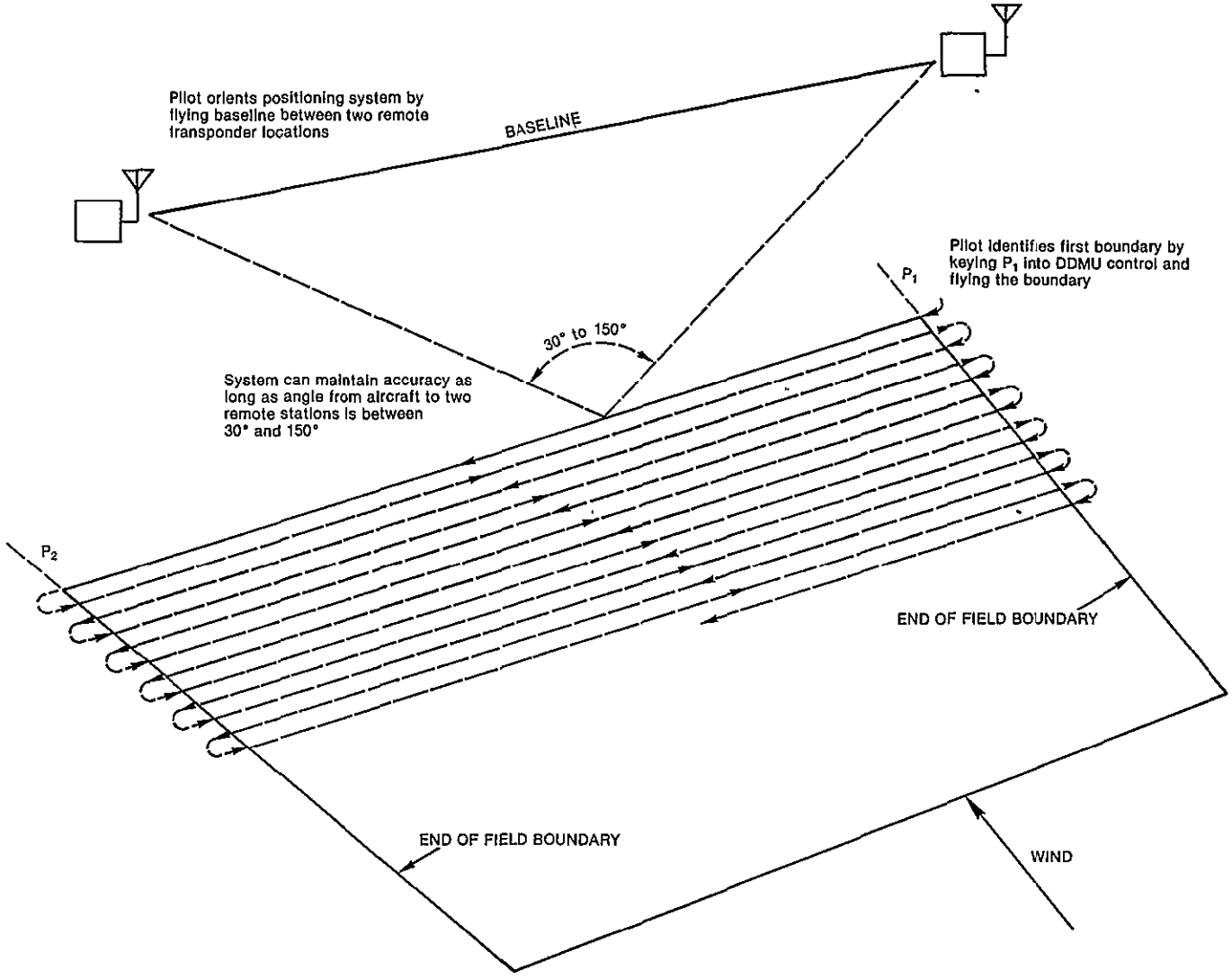

Figure 2.8
End of Field On/Off Control Positioning Equipment

The control valve is essentially a three-way valve with three ports and three flow-control positions. In the spray-off position the valve directs the flow from the pump back into the tank through a venturi section. In the spray-on position the line from the pump to the boom is opened and the flow to the tank is closed off. The third position connects the tank to the boom for filling or emptying the tank through the end of the boom.

The possibility of leaks from the powered control valve is considered to be no greater than with the manual systems. A valve indicator which operates on basically the same principle as the landing gear indicator could give the pilot an accurate indication of proper operation or malfunction.

Valve Controller. In its simplest form, the valve controller is the pilot activating the on/off switch. In the fully automatic system, the controller would be activated by a signal from the electronic positioning device.

CONTROL OF APPLICATION RATE AND PARTICLE SIZE

Currently there is no practical method for directly controlling either particle size or application rate. Discharged particle size (for a given nozzle) is dependent on the system pressure. However, once discharged the droplet is influenced by the air speed, attitude of the nozzle, height above ground, temperature, humidity, and wind. Application rate is dependent upon the following parameters: orifice diameter, system pressure, number of nozzles, swath width and airspeed. Swath width is a function of height above the ground.

This coupling between the application rate and particle size requires consideration of the effect variations in the various parameters would have on both performance measurements before corrections are made to either application rate or particle size.

Application Rate

The application rate depends upon the output of each nozzle, the number of nozzles, the width of the swath and the ground speed.

The desired application rate is determined using the formula:

$$A = \frac{10{,}000CN}{SV}$$

where: A = application rate in litres/hectare
C = capacity of nozzle in litres/min.
N = number of nozzles
S = swath width in meters
V = ground speed in mpm.

When an application rate is specified for a particular job, the pilot (operator) adjusts one or more of the above factors to meet his needs.

It is noted, however, that there are other considerations that must be taken into account in order to achieve a desired deposit rate. These factors are discussed below under deposit rate.

As mentioned above, the output of a nozzle varies with the pressure in the spray system. This pressure can currently be controlled (within certain limits) by the pilot from the cockpit. Since even distribution is contingent upon an even flow rate in the system, an immediate improvement to current dispersal systems could be realized by use of a regulator to automatically compensate for variations in pump input power by adjusting the pump to increase or decrease pressure in the system. In current systems the pump is usually electric or driven by a hydraulic drive system or a propeller in the aircraft slip stream. A schematic of this system is shown in Figure 2.9. This system would require the pilot to perform some monitoring since such a system would have the capability to try to compensate for reduced flow (e.g., a few clogged nozzles) simply by increasing pressure. Therefore, the actual pressure and flow should be monitored.

Undulating terrain, obstacles, etc. could also have an effect on the application rate by causing variations in the height of the aircraft over the ground and hence cause changes in swath width. In addition, ground speed is directly related to the true air speed of the aircraft. Both of these variables can be measured and adjustments made as shown in Figure 2.10. Variations in height above ground can be detected using a sonar device and ground speed variations by inputs from the electronic positioning device.

To determine and monitor the application rate the following seven elements could be added to improve existing spray controls systems:

- Application Rate Indicator
- Application Rate Computer
- Flow Rate Transducer
- Ground Speed Computer
- Sonar Altimeter
- Height Above Ground Computer
- Swath Spacing Distance Setting.

Figure 2.11 illustrates the interrelationship of these elements. The Digital Distance Measuring Unit (DDMU) of an electronic positioning system, previously discussed, and a precision altimeter provide continuous navigation data. Other elements of an improved dispersal control system are discussed below.

Application Rate Indicator. The application rate indicator displays the actual application rate based upon the measured flow rate, measured ground speed and preset swath width. The indicator is envisioned as a simple gauge which receives its inputs from a microprocessor. Data displayed by the application rate indicator could either inform the pilot a change is necessary and he could manually adjust pressure, altitude or air-speed, or the data could be fed directly into a central programmer which would automatically adjust the application rate. The application rate indicator should meet the following specifications:

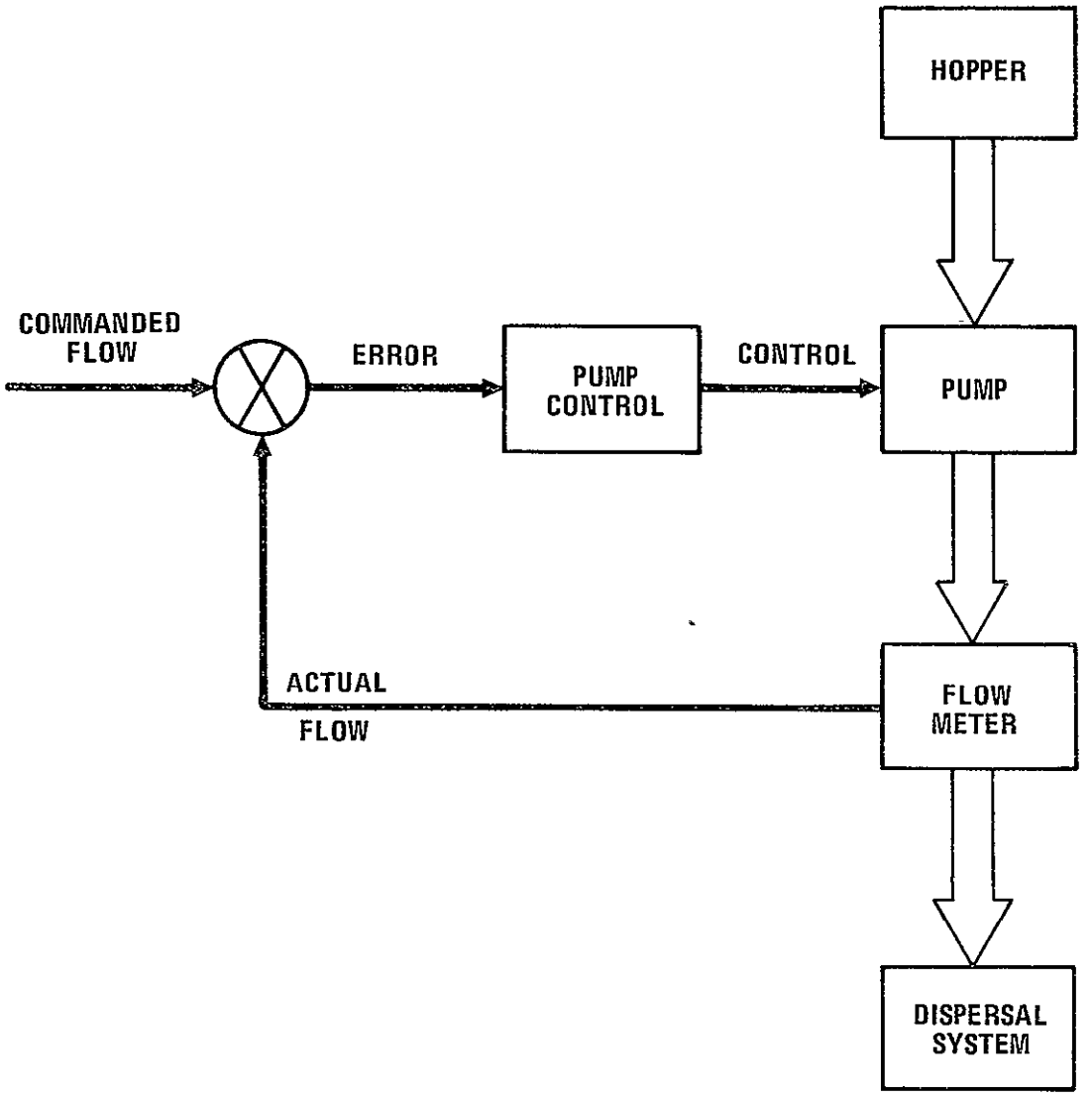

Figure 2.9
Simple Total Flow Regulator

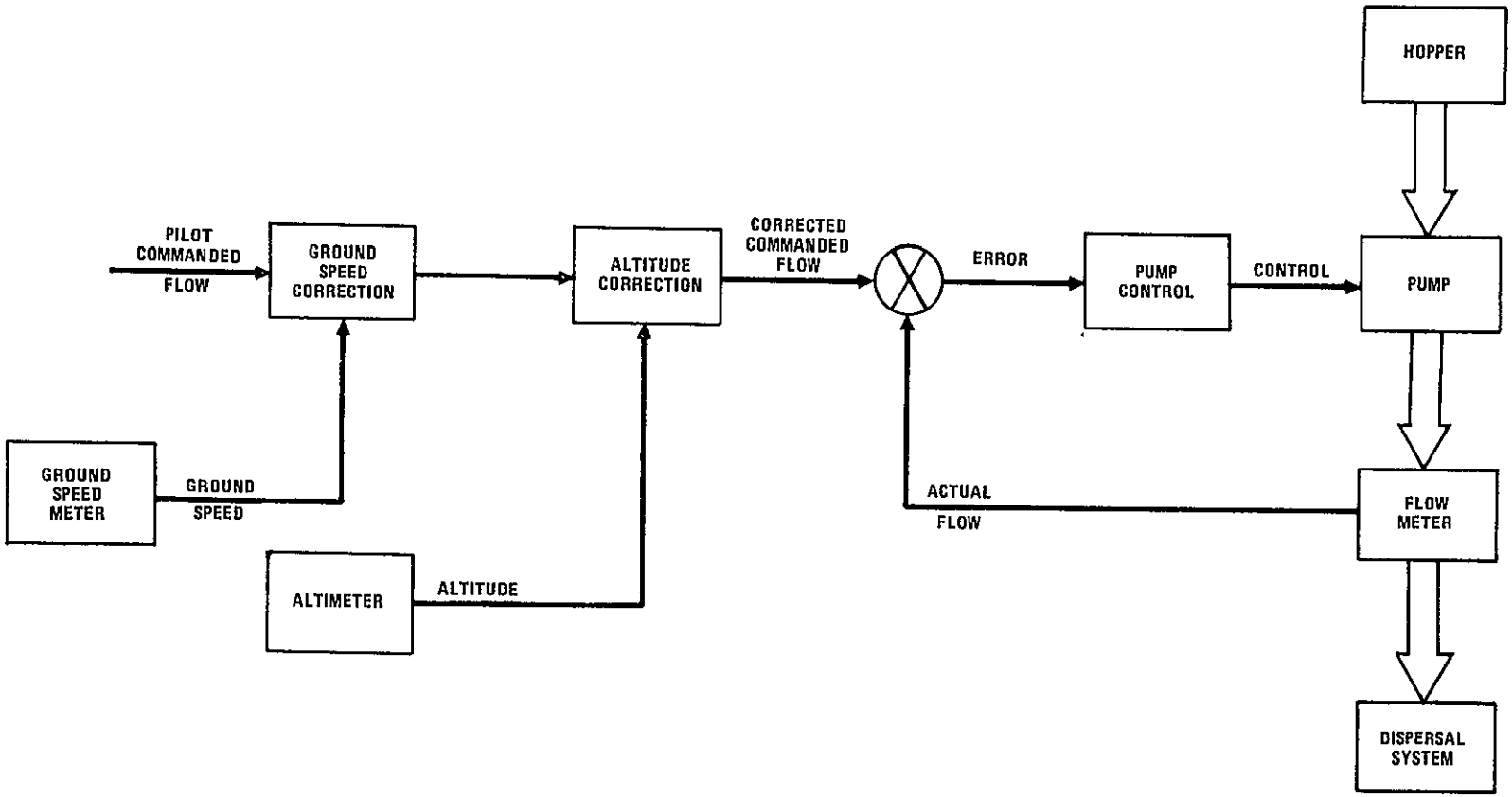

Figure 2.10
Compensated Total Flow Regulator

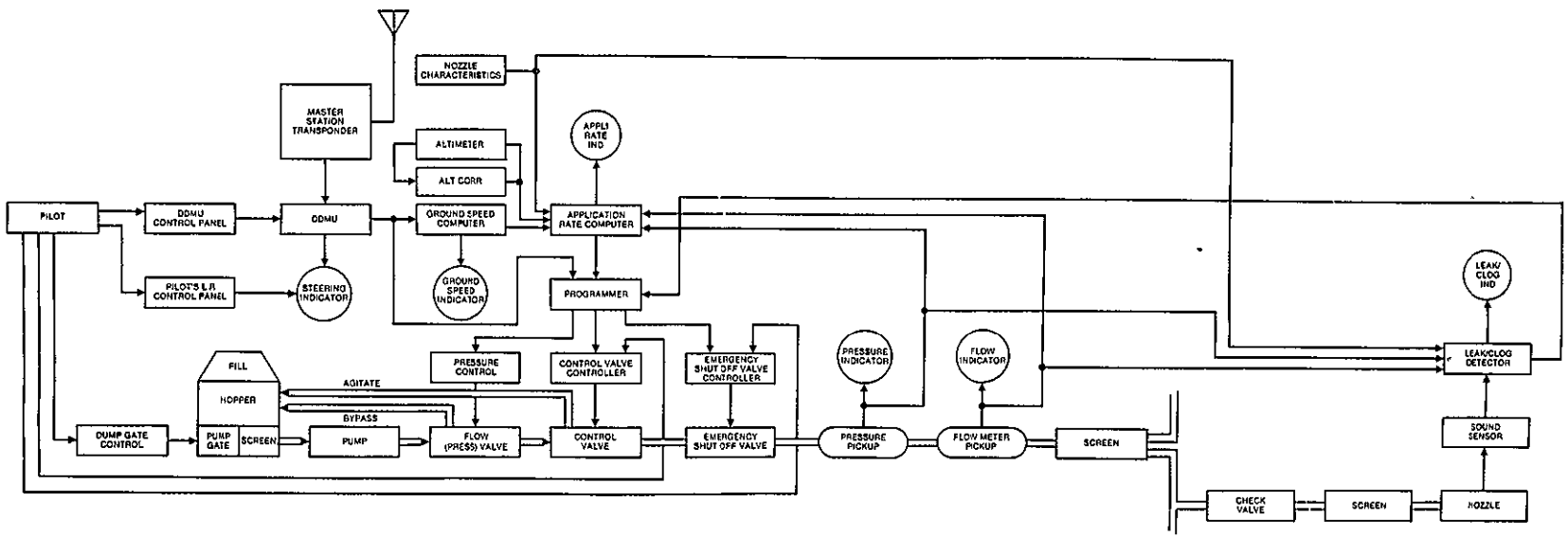

Figure 2.11. Application Rate Elements

Range of Sensed and Manipulated Variables. The application rate indicator would display the actual application rate in litres per hectare. This would be indicated by a digital readout. Readings would be from 0 to 100 in tenths of a litre per hectare. Input to the indicator would come from the application rate microprocessor.

Required Manual Inputs. There are no required manual inputs to the application rate indicator.

Malfunction Avoidance Capability. The application rate indicator is a display only. It would have the capability of being ground tested by the pilot through a built-in test circuit that indicates proper performance of the indicator.

Difficulty of Adjustment and Maintenance. No adjustment or maintenance of the indicator is envisioned. Failure of the indicator to pass the operational test would require replacement of the indicator.

Installation. Installation of the application rate indicator would be such that it could be easily replaced in case of malfunction. Location of the indicator need not be on the pilot's control panel but should be in a convenient location for ease of pilot reference.

Application Rate Computer. The application rate computer is a microprocessor which is capable of computing desired application rates based upon preset inputs, storing this data, and comparing the desired application rate with the actual application rate that is computed based upon inputs from the airborne sensing devices or the pilot. If the actual application rate varies from the desired application rate by more than a preset amount, the pilot is alerted by a warning buzzer and/or flasher.

The actual application rate is determined by sensing the fluid flow and the ground speed. Variations in fluid flow can arise from variations in pressure or leaks and/or clogs in the dispersal system. (Methods for detecting leaks and/or clogs are discussed in the next section of this report.)

In the automatic control system, the programmer would be able to sense the amount of pressure that must be adjusted to compensate for variations in pressure from a leak and/or clog, or other system malfunction. Since pressure also has an effect on the droplet size, the system would have an upper and lower compensating pressure limit above or below which the spray system would be shut down, or other options (such as reserve nozzles) designed into the system. The application rate computer should meet the following specifications:

Range of Sensed and Manipulated Variables. The computer should be capable of being accessed by the pilot through a keyboard which would be capable of inputting the following data:

Malfunction Avoidance Capability. The application rate indicator is a display only. It would have the capability of being ground tested by the pilot through a built-in test circuit that indicates proper performance of the indicator.

Malfunction Avoidance Capability. The flow rate indicator should be capable of being tested by a built-in circuit.

Ground Speed Computer. The ground speed computer calculates the aircraft's speed over the ground, using a simple time-distance computation based on distance measurements derived from an electronic positioning system. Distance to a selected point, e.g., the swath end point, is currently calculated and presented to the pilot by the Digital Distance Measuring Unit (DDMU). The ground speed computer determines the difference between two readings from the DDMU over a preselected period of time, e.g., 10 sec. divides the difference by the time and displays the resulting ground speed on the ground speed indicator in meters per minute. This data is simultaneously inputted to the application rate computer. The total program for computing the ground speed could be contained on one chip in the central programmer. As noted above, this function can be accomplished as part of an electronic positioning device and the ground speed inputted to the central programmer. As an alternative approach, airborne doppler radar could be used for computing ground speed. Radar beams directed toward the ground can be positioned to provide along track and across track velocity measurements for input to the programmer in an automated system. However, this type of system would not provide position location unless combined with a tracking system using a preset position fix.

Height Above Ground Computer. The height above ground computer calculates the variations in the aircraft's height above the ground versus the preset application height and inputs altitude corrections to the application rate computer. The actual height above the ground is provided by the sonar device. The desired height above the ground is inputted to the computer by the pilot. The total program for these computations are contained on one chip in the central programmer.

Height Above Ground Indicator. The height above ground indicator presents a display to the pilot in meters of the aircrafts height above the ground. Source of the reading is the sonar device. The height above ground indicator would be collocated with the ground speed indicator.

Pressure Transducer. The pressure transducer measures the pressure in the line between the pump and the boom. This pressure is inputted to the application rate computer and displayed to the pilot by the pressure indicator. Adequate transducers are available on the market today but must be evaluated and selected for compatibility with ag materials.

Pressure Indicator. The pressure indicator presents a display to the pilot in newtons per cm^2 of the pressure in the system. Source of the reading is the pressure transducer. Since the pressure is a major control parameter, the indicator should be located where it is readily visible to the pilot.

Range of Sensed and Manipulated Variables. The pressure indicator would be a gauge in newtons/cm^2. The range of the sensed pressure will be from 0 to 50.

Swath Distance Setting. Application rate is also affected by the distance between the swaths. Under ideal conditions, uniform distribution will occur when the swath spacing is equal to the swath width. If the spacing of the swaths is too narrow, concentration peaks will occur, and if too wide, thinly covered portions will occur. With the electronic positioning device described above, the pilot should be able to maintain greater accuracy in swath tracking and thereby improve more uniform application rate.

Since spray effectiveness data is presented in terms of droplet size, it is important that the pilot have some assurance that the material being applied will arrive on the target surface in a form in which it will be most effective for the biological efficiency of the materials used.

Droplet size is also one of the most important factors affecting drift. Small droplets present a much greater drift hazard than large droplets since they stay in the air longer and are more easily carried by wind currents. Current pesticide spray systems cannot produce a completely uniform droplet size. Rather they produce a range of droplet sizes.

Important factors affecting droplet size are nozzle type, system pressure, attitude of the nozzles and airspeed. In general the size of droplets decreases as the size of the nozzle opening decreases or the pressure or airspeed increases.

A measurement of nozzle performance is the Volume Median Diameter (VMD) of the droplets it produces. The VMD is the droplet diameter that satisfies the condition that half of the spray volume consists of drops larger, and half consists of drops smaller.

The size of the core and orifice disk of the nozzle are preselected by the operator based upon the desired deposit rate. Factors considered in this selection process are nozzle availability, swath width, droplet size, pressure and airspeed. The attitude of the nozzles is also preselected based upon the required droplet size. Once installed, however, the pilot currently does not have any further control over these parameters.

Under today's technology the pilot can adjust the size of the droplet only by variations in the system pressure and the airspeed. High pressures will give smaller droplet sizes; however, below 20.7 newtons/cm^2, the droplet sizes not only become larger but also rather more irregular.

DEPOSIT RATE AND PARTICLE SIZE

Deposit rate is directly related to the swath width and the amount of material deposited during the swath run. The distribution of spray liquid on the target is affected by droplet size, the number and location of the

nozzles, the height and speed of application, the swath width and meteorological conditions. Deposit rate will differ from application rate because of two factors: changes that take place in droplet size from the time it leaves the nozzle until it reaches the target, and drift.

Droplet size will change as a result of being subjected to the airstream (which will break the droplet into small particles) and evaporation (which is a function of temperature and humidity, the substance used to dilute the chemical, and the height at which the chemical is dropped).

Drift is a function of droplet size, wind speed and direction, nozzle location, spray height, air turbulance and thermal currents.

Mathematical models have been developed to assess the effect of cross wind, wing tip vortices, height, evaporation and propeller swirl on the trajectories of droplets emitted from agricultural aircraft. The computer models describe the path of individual droplets and then combines these paths to obtain the spray pattern.

The results of one such model[4] states that to achieve a desired deposit rate, contraints are necessary, such as in the placement of nozzles and in the acceptance range of droplet size. The effects of adverse weather conditions are addressed only so far as to say they should be avoided.

Therefore, the additional sensing and control elements (altitude, temperature, humidity and relative wind) described in concept 3 of the Task I Report, which would provide the translation between application rate and deposit rate under dynamically varying conditions from run to run, appears beyond the control of the pilot in the foreseeable future. Improvements are needed in the design of the nozzle placement and maintenance of droplet size. The design of the nozzle placement will, of necessity, be aircraft specific. However, once the boom and nozzle placement has been determined, the operator is constrained to the parameters of nozzle selection, system pressure, airspeed and height of application. Control of these parameters whether manually or automatically, has been discussed above.

Environmental Data

Temperature, humidity, wind direction and speed are factors that remain important in the nozzle selection and mixing substance. Trayford and Welch describe a small calculator based on a regression equation* for use as

---

*The regression equation used was:

$r = 40.0 \div 66.6 \log d_{vmd} - 8.98\, h^{1/2} - 1.90\, x - 21.7 \log \Delta T.$
where r = recovery, %; d_{vmd} = volume median diamter of droplet, m;
h = height, m; x = crosswind at 1m m/s; and ΔT = wet bulb depression, ^{o}C.

a guide to determine when an acceptable level of recovery can be expected. The regression equation includes the five factors which most significantly affect the recovery of a water based spray.

Since the operator will use a variety of mixing substances, he will also need to know the recovery that can be achieved using alternative chemical solutions. Further, the operator will need to know the meteorological limits for the spray system and solution to advise him when he should suspend further spraying operations.

Since these decisions are made by the operator on the ground rather than the pilot in the air, a sophisticated sensing system in the aircraft to advise the pilot of these parameters does not appear warranted. Ground personnel could alert the pilot by radio when he has reached these predetermined limits and suspend further spraying operations. This alarm could also be transmitted by a transponder on the ground hence alleviating the requirement for ground personnel to monitor and report changes in meterological conditions.

Geometric Accuracy

The Task I Report described a geometric accuracy control system concept which presented to the pilot an indication of both the displacement of the spray pattern referenced to the aircraft centerline and an indication of the spray pattern distortion dissipation. Determination of the geometric accuracy would be by a geometric accuracy computer which would take inputs from the particle size computer, the height pickup, and the wind computation. Control of the displacement would be accomplished by the pilot modifying the flight path. As stated in TM 111-79 this would only be critical near the edge of the target.

The concept appears redundant to the calculations that must be made to determine the proper nozzles and chemical mixture to achieve a desired deposit rate. Calculating the wind from airspeed and ground speed sensors appears overly complex when a person on the ground with much simpler and direct measurements could relay this information to the pilot by radio. This would be accomplished, as stated above, to determine the time when the spraying operations should be suspended (e.g., an increase in wind speed) or increases in temperature and humidity require changes in droplet size beyond the control of the pilot.

LEAK AND CLOG DETECTOR

A major problem in current dispersal systems is knowing when there is a malfunction in the spray system from leaks and clogs in the nozzles. It has been proposed in the Task I Report that these leaks and clogs be detected by monitoring the pressure and flow in the line between the pump and the boom. Variations beyond a preset limit would trigger an emergency shutoff control. Whereas the technology for such a system is well in hand, the pilot has no current capability for identifying the malfunctioning nozzle nor compensating for the clog by adjustments to the remaining nozzles.

An interesting concept being marketed by Century Engineering Corporation of Cedar Rapids, Iowa, for terrestrial application is the Century Electronic Nozzle Monitor. The device operates on the principle of sound created by the flow of liquid through the nozzle. If the flow through the nozzle becomes restricted or reduced, the character of the nozzle sound changes. Attached to each nozzle is a sound-triggered sensing device. When the nozzle sound changes, the sensor "hears" the change and relays the information to a control panel in the cab. The control panel alerts the operator with a flashing light and buzzer to indicate a problem in the system.

Century has indicated that they have done no research into configuring their device to aerial application but can see no insurmountable problems to such an installation. The one problem they foresee is isolating the sensing device from vibration or other outside noise. Fine tuning the device to a limited frequency would go far in reducing this problem. This concept would also require research and technology to determine the effect such a device would have on currently employed aerial spray nozzles.

Another potential solution for determining the presence of a leak or clog is the use of fiber optics to scan across the nozzle opening. This solution requires further investigation to determine the accuracy needed to detect leaks and/or clogs.

Of course, detection of the leak or clog is but half of the control effort required. It is possible to build an automatic shut-off in the event of a leak. For a clog (i.e., a restriction in the nozzle) compensation is necessary to prevent streaking.

Options available to the operator include:

- Shut down of the spray system and noting the location on the electronic positioning device. This alternative enables the pilot to return to his base, clean the clog and resume spraying operations where the clog developed. These functions could be performed automatically.

- Increase the application rate by increasing pressure in the system or reducing airspeed. As mentioned previously, the pilots prefer to conduct their spraying operations at a constant power setting. Increasing the pressure in the system would increase application rate but would decrease droplet size and may not alleviate the problem of streaking.

- Activation of a heretofore unused adjacent nozzle. Spare nozzles, strategically located could be installed and programmed to become activated upon a signal from the central programmer.

- Instead of activating heretofore dormant adjacent nozzles, it is also conceivable that active adjacent nozzles could be adjusted to compensate for clogged nozzles. Figure 2.12 indicates that such a system might seem complicated. However, modern technology may enable implementing such a system by means of a few reliable, low cost components. It is noted that injector technology is highly developed on many low cost automobiles and that computation and control with custom LSI electronics are highly developed (namely reliable and inexpensive).

- Adjustable nozzles. Adjustable nozzles are currently available; however, they are only adjustable on the ground. It is conceivable that in the event of a clog, electric motors could change the orifice on the clogged nozzle to a larger size maintaining the same flow rate through that nozzle. The complexity of a series of electric motors requires further investigation.

FULLY AUTOMATIC SYSTEM

Under the fully automatic dispersal control system, after the pilot has applied the appropriate pre-flight ground settings he would be able to fly his spray pattern without a requirement for manual control changes. In terms of flight safety, accuracy and economy of agricultural materials, this is the optimal dispersal control system. Cost, of course, may be a significant consideration in operator acceptance. A breakdown of anticipated elements and their cost for a fully automatic system is shown in Table 2.2.

Flight Programmer

The keystone to the fully automatic dispersal control system is the flight programmer. It has been mentioned briefly above when describing the functions to be performed in order to achieve various improvements to the current dispersal systems, e.g., computation of application rate and droplet size as well as deposit rate.

The flight programmer is envisioned as a microprocessor which is programmed by the pilot from a keyboard and acts as a go/no-go evaluator. When the inputs from the various sensors fall outside a specified range, the processor will send a signal to the regulator to increase/decrease the pressure in the system (if the application rate is too low/high) or activate nozzles which thus far have been dormant (in the case of a leak or clog). The programmer should meet the following basic specifications:

Rationale. It is assumed that variables are handled as 8-bit BCD words so that the process is compatible with available off-the-shelf microprocessor units. Figure 1.1 (flow chart) is used as a basis and assumes auto stop and start via on board location detector.

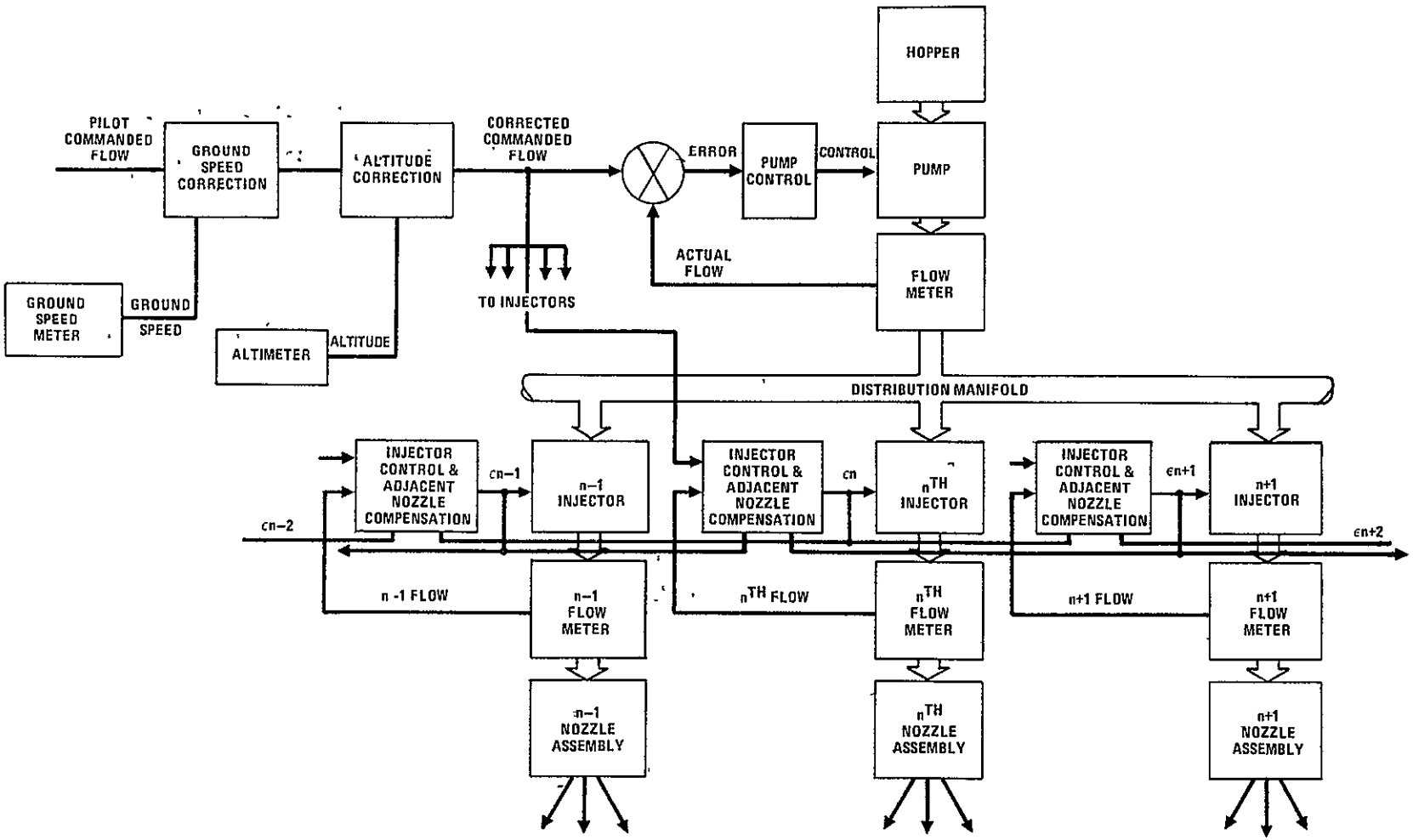

Figure 2.12
Compensated Pattern Regulator

Table 2.2
Fully Automated Control System Cost Breakout

Function	Item	Cost
Turn-On and Shut-Off Accuracy	Electronic Positioning Device	$50,000
	Powered Control Valve[1]	300
	Automatic Turn-On Shut-Off[2]	(See Note)
Application Rate Accuracy	Flow Meter Transducer	100
	Flow Meter Indicator	300
	Application Rate Computer[3]	(See Note)
	Application Rate Indicator	300
	Ground Speed Computer[2]	(See Note)
	Ground Speed Indicator[2]	(See Note)
	Sonar Device	3,000
	Height Above Ground Indicator[4]	(See Note)
	Height Above Ground Computer[4]	(See Note)
	Pressure Transducer	100
	Pressure Indicator	300
	Programmer	1,500
Droplet Size Control	(All of the Above)	

[1] Cost to convert from manual system, option for new aircraft may run $400, not needed if aircraft already equipped.

[2] Included in Electronic Positioning Device.

[3] Included in Programmer.

[4] Included in Sonar Device.

Size. A small 8-bit or 16-bit fixed program microprocessor similar to those in current use in industrial process controls as "built in" processors to control individual values.

Memory. About 50 bytes (8-digit words); 25 bytes for input/output buffering and 25 bytes for computational "scratchpad" and for various housekeeping functions.

Cost. $500 - $1,000 per aircraft.

Input/Output. 7-8 bit input variables with A/D conversion 8-8 bit hard-wired preset (program) inputs (including provision for entering start and stop commands automatically from on board location system), 2-8 bit hand-wired binary position controls.

Displays. 3-3 or 4 digit displays (for particle size, application rate, and distance-to-boundary). (It is assumed that airspeed, ground speed, level, pressure, and flow are already available.)

Difficulty of Operation. The only operation required for the processor is to enter the presets via manual switcher prior to take-off and to turn the program control on prior to each run.

Reliability/Maintainability. Off-the-shelf units similar to this have been in use for industrial process controls for several years under severe environments. A recent ORI survey of industrial uses indicates very high reliability and ease of maintenance through replacement of PC boards. Errors or drop-outs due to power voltage transients can occur, but should not be a problem, if suitable power regulation is considered in the selection of microprocessor units.

SOLID DISPENSERS

Up to now the analysis of current ag air dispensers has been directed towards improvement of the liquid dispersal system. The problems of dry dispensers are generally more complex than their liquid counterparts primarily because the material being applied consists of fertilizers, granules, micro capsules seeds and dusts, rather than liquid droplets. The flow rate measurements and uniform deposit rates are more difficult to achieve.

However, many of the improvements recommended for liquid dispensing systems are also applicable to dry dispensing systems (e.g., end of field turn-on and turn-off), and need not be restated here. Measuring the application rate remains as the major problem to be addressed, not only because the dispersal systems used for liquid and dry materials are different, but because there is no satisfactory off-the-shelf item of equipment which satisfies the dry applicators' needs.

Current fixed wind dry applicator systems consist of a hopper, agitator and spreader.

The hopper is usually the same tank that is used for spraying. A large door is fitted at the top for loading and a gate is fitted at the bottom for controlling the flow of material. This gate, which slides across the opening of the hopper, is operated by a lever in the cockpit. The rate of flow of material is controlled by regulating the size of the gate opening, for which purpose an adjustable stop is fitted to the operating lever.

A mechanical agitator is fitted in the lower part of the hopper to break up small lumps and maintain the smooth flow of materials which tend to bridge over the gate opening. A common type takes the form of a squirrel cage, driven via a reduction gear by a windmill placed in the propeller slipstream. The windmill can be braked from the cockpit.

Two types of spreaders are commonly employed for the application of solid materials -- a venturi type and an airfoil type. The venturi type is a tunnel shaped like a venturi tube, mounted below the hopper on the underside of the fuselage so that air from the propeller slipstream enters the front of it. Material falling from the gate of the hopper into the spreader is blown out at the rear. The shape of the spreader, together with internal guide vanes as channels, adds a sideways velocity to the motion of the particles and, thus, spreads them out behind the aircraft to a width of 5.5 - 15 m.

The channels within such spreaders are irregularly shaped to compensate for the tendency of the propeller vortex to displace particles from one side to the other while they are falling to the ground.

The airfoil type spreader is shaped like a pair of small wings mounted beneath the fuselage. The surfaces of the wings are pierced by a large number of small holes. Material falling from the gate of the hopper meets a flow of air from the propeller slip stream entering a large opening at the front of the spreader, and is carried by this air flow into the "wings" from where it is blown out through the surface holes. Guide vanes are placed inside the wings to improve distribution and flow.

Application rate (A) is calculated in kg/ha using the same formula as for liquids, e.g.,

$$A = \frac{10{,}000\ CN}{SV}$$

where C is the capacity of the spreader in kilograms/min.
N = 1
S = swath width in meters
V = groundspeed in meters per min.

End of Field On/Off Control

Any equipment developed for improving the end of the field on/off control for liquid dispensing systems would have similar application for solid dispensing systems.

Automatic Control of Application Rate and Particle Size

Solid dispensing systems do not have the same deficiencies concerning the control of application rate and particle size as liquid dispensing systems. By its nature solids are more difficult to measure than liquids and some materials are adversely affected by increases in humidity. However, many of the elements that were added to the liquid dispensing system have application to solid dispensing systems, such as the application rate computer, ground speed computer, ground speed indicator and swath distance setting. The flow rate indicator and application rate indicator could possibly be interchangeable provided the pilot is able to read kilograms per minute or per hectare for solids and liters per minute or per hectare for liquids.

The flow rate transducer would have to be replaced by a solids measuring device which could be used for a variety of dry materials. While all reasonable steps should be taken to obtain predictable flow rates by means of rotary feeders, there remains the vexed problem of measuring the flow rates actually obtained in operation. Such measurement is essential in flight if a control system is to be developed permitting comparison of actual and predicted application rates and a conclusive response, e.g., by effecting a change in the feeder RPM.

Three techniques are proposed for further investigation:

- A turbine in the flow that responds to the flow as in the liquid "flowrater" device -- RPM increases with flow and may be calibrated.
- A sliding plate in the duct wall restrained by strain gauges. Here the wall stress is dependent on the flow near the wall and hence on the overall flow
- The hopper loosely constrained laterally and attached to the exit duct by a loosely contraining connection. The hopper would be supported at 3 locations around the exit duct via load cells. The sum of the readings of the load cells would give the weight of the hopper and its contents (excluding the column above the exit duct). This would offer the prospect of a weight difference method of measuring flow rates, if the behavior of the column referred to is reasonably consistent.

Deposit Rate

As mentioned above, dry material, after ejection, is less affected by environmental conditions than liquid material. Therefore, it is anticipated that application rate will nearly equal deposit rate for dry application.

Leaks and Clogs

Leaks are considered a serious problem with dry dispensers. Clogs or choking do occur when too much material enters the spreader and the airstream is not powerful enough to move the material out the rear of the spreader. Choking can be prevented by reducting the hopper gate opening, flying faster or with 2/3 flaps and thereby increasing drag and the power required hence the speed of the slipstream. By more accurately metering the material entering the spreader, this problem would be avoided. Proper care in the storage and loading of dry materials to prevent caking and lumping of the material is also mandatory to prevent clogging, especially in the airfoil type of spreaders.

Residue In Hopper

Another problem not heretofore addressed is informing the pilot of the amount of ag material remaining in the hopper. The importance of this information is obvious when considering the possibility of running out of material before the completion of a run. The ability of an electronic positioning device which would automatically store the location where the hopper ran out would alleviate the problem of starting the next run at the same location. Without this capability the pilot should have an indication when he will not have sufficient material for another run.

Currently the only indicators the pilot has of ag material remaining on board are experience and float level indicators or a window located beneath the control panel which looks into the hopper. Graduations on the window indicate the amount of material remaining. Comments from the ag pilots reveal that not all aircraft are equipped with windows visible from the cockpit and those with windows are difficult to read and divert the pilots attention too severely.

One approach to more accurately describe the amount of material remaining would be a gauge which digitally displays the difference between the amount of material loaded onto the aircraft and the amount of material dispensed. This could be an adaptation of the Silver Instruments fuel - management computer, Fueltron. The Fueltron digitally displays fuel and flight time remaining by computing the flow rate. Since flow rate is already being computed, a simple additional feature added to the central computer would provide the pilot accurate information of material remaining.

III. TECHNOLOGY PROGRAM DEFINITION

This section presents a technical approach to be followed for the development of those components not likely to be available by 1985 which warrant separate development as components. In addition, system technology development and demonstration plans are also included for those configurations which warrant separate development as systems. Figure 3.1 "Overview of Technical Plan," consists of three phases that run concurrently from FY 1980 through FY 1990. Specific task areas are listed on the figure within the appropriate phase.

The figure also indicates the near term effort, described in Section II that, although not a part of the technology program, are significant prerequisite activities. Consequently they are described in the following section.

OVERVIEW OF PROPOSED PHASES

Near Term Activities

These activities consist of demonstrations of state-of-the-art, off-the-shelf equipment or equipment which would require only minimum modification to prove the benefits that would accrue to the ag air operator.

Although these benefits can be identified from an analytical analysis, hard data obtained from field testing is required to convince the ag air operators and pilots that it is economical to make the hardware investment. The following are suggested for this phase.

Spray Sight Validation. Theoretically a spray sight which provides the pilot with some range of information should increase the pilot's end of field on/off control accuracy. A flight program which compares the accuracy attainable with and without a spray sight would provide this answer, in addition to information on the time required to line up for each run with

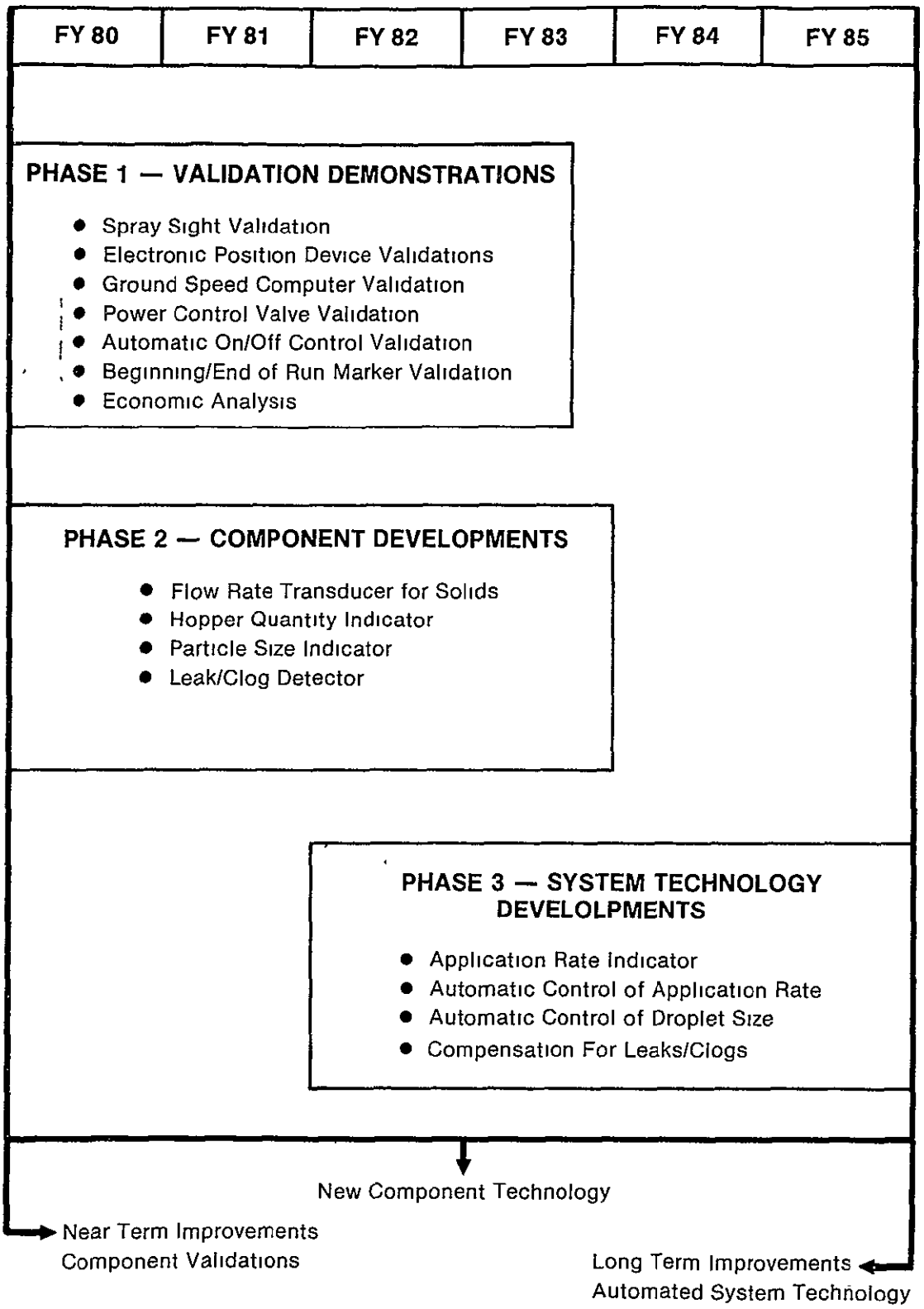

FIGURE 3.1 OVERVIEW OF TECHNICAL PLAN

and without a spray sight, the amount of time the pilot's attention is diverted from flying using the sight, the difficulty and time required to adjust the sight, etc.

Electronic Positioning Device Validation. Manufacturer and operator now claim to have the documented proof required to convince the ag operator of the accuracy that could be achieved using such a device. A flight program to obtain data similar to that described in the spray sight validation effort is proposed.

Ground Speed Computer. If an electronic positioning device is installed on the aircraft, a minor addition of a microprocessor would enable the positioning device to calculate the ground speed of the aircraft. An alternative approach to determining the ground speed could be a doppler radar. An analysis of the total cost and benefits of adding an additional capability to the electronic positioning device vis-a-vis adding a new component needs to be investigated.

Powered Control Valve Validation. Although 25% of current ag aircraft are equipped with a powered control valve, the benefits (e.g., accuracy and repeatability) have not been documented.

Automatic End of Field On/Off Control Validation. Del Norte Technology has stated that they have developed the software to automatically turn on and turn off the spray system upon reaching the proper activation point when the field boundary is perpendicular to the line of flight. A flight program which demonstrates the accuracy and repeatability achievable using an electronic positioning device with and without the automatic turn-on and turn-off feature is proposed.

Beginning and End of Run Marker Validation. The use of markers are suggested in Section II to calibrate the spray sight and thereby enable the pilot to verify the accuracy of his end of field on/off control accuracy. A flight program is proposed to verify the benefits these markers would provide for improving end of field spray system turn-on and shut-off accuracy.

Economic Analysis. An economic study is proposed to document the economic benefits of proposed system improvements to show cost savings that could be achieved by ag air operators.

Component Development

This phase includes development activities of those components not likely to be available by 1985 which warrant separate development as components. The activities contemplated in this phase are described in the following paragraphs.

Flow Rate Transducer for Solids. Flow rate transducers are available off the shelf to measure the flow of liquid agricultural materials. Such is not the case for solids. Three approaches were identified in Section II that

could meet the ag operator's needs; however, further investigation is necessary to prove their viability. These approaches are:

- Turbine that is driven by the flow of dry materials similar to a liquid "flow rater" device
- Sliding Plate in the duct wall restrained by strain gauges
- Hopper loosely constrained laterally and supported at three locations via load cells.

Hopper Quantity Indicator. This gauge informs the pilot of the amount of material remaining in the hopper. The amount of residual material in the hopper provides inputs for planning and monitoring coverage areas. Current devices do not provide easily read measurements, dry as well as liquid materials, to the pilot. Investigation is required to determine the cost and feasibility of implementing direct readout capabilities for both dry and liquid dispensing system.

Particle Size Indicator. This gauge is envisioned for liquid systems only. Particle size is dependent upon pressure in the system and the nozzle characteristics. By marrying these two inputs together via a microprocessor and displaying the result on a gauge, the pilot can monitor and control (via adjustments in the system pressure) the size of the droplet being emitted from the nozzle.

Leak/Clog Detector. Section II described three approaches for detecting leaks and/or clogs in the aircraft spray system. These approaches were:

- Monitoring the flow rate through each nozzle
- Use of an acoustic device on each nozzle
- Use of fiber optics.

Each of these systems appear feasible; however, the practicality and cost aspects of each needs further investigation.

System Technology Developments

This phase includes systems technology development and demonstration plans for those configurations which warrant separate development as systems. These systems consist of off-the-shelf equipment and components developed in Phase II assembled to provide the ag air operator improved capabilities. These systems are described in the following paragraphs.

Application Rate Indicator. This system indicates to the pilot the rate that he is applying ag material to the heated field. The system takes input from the flow rate transducer, the height above ground transducer, and ground speed computer and calculates the application rate. This rate is

displayed to the pilot on a gauge which he monitors. If adjustments are necessary, they can be made by the pilot by either adjusting the pressure in the system, the height of the aircraft over the ground, or the air speed.

Automatic Control of Application Rate. By taking the data from the flow rate transducer, the height above ground transducer, and the ground speed computer as inputs to a micro-processor, a regulator could automatically control the pressure in the system thereby achieving a uniform application rate. Automatic control of the airspeed or height above the ground is not recommended.

Automatic Control of Droplet Size. Changes in droplet size may become necessary because of changes in temperature and humidity. Varying droplet size by adjustments in pressure is not recommended because of the close coupling between droplet size and application rate. Similarly adjustments in airspeed and height above the ground are also not recommended. Control, therefore, would be based upon adjustments to the nozzle. The use of electrically driven nozzles requires further investigation.

Compensation for Leaks/Clogs. Section II described alternatives available to the pilot once he has been alerted that he has either a leak or clog. These alternatives are:

- Automatic shut-off
- Compensation using adjacent dormant nozzles
- Compensation by adjusting the malfunctioning nozzle.

Further investigation is required to determine the cost and feasibility of the compensating options.

WORK BREAKDOWN STRUCTURE

The major phases of the Aerial Applications Distribution Control Technology Program depicted in Figure 3.1 are as follows:

- Phase 1.0.0.0 Equipment Validation Phase
- Phase 2.0.0.0 Component Development
- Phase 3.0.0.0 System Technology Developments.

Figure 3.2, the Work Breakdown Structure (WBS) block diagram, illustrates the interrelationships between these phases and their major tasks. The WBS for the Technology Program Tasks are further expanded into subjects in Figure 3.3.

The functional grouping of the WBS serves as a roadmap for understanding the overall program effort. The following paragraphs describe the tasks and subtasks that support each phase. When subtasks are described, their four digit code numbers (from Figure 3.3) appear in parentheses.

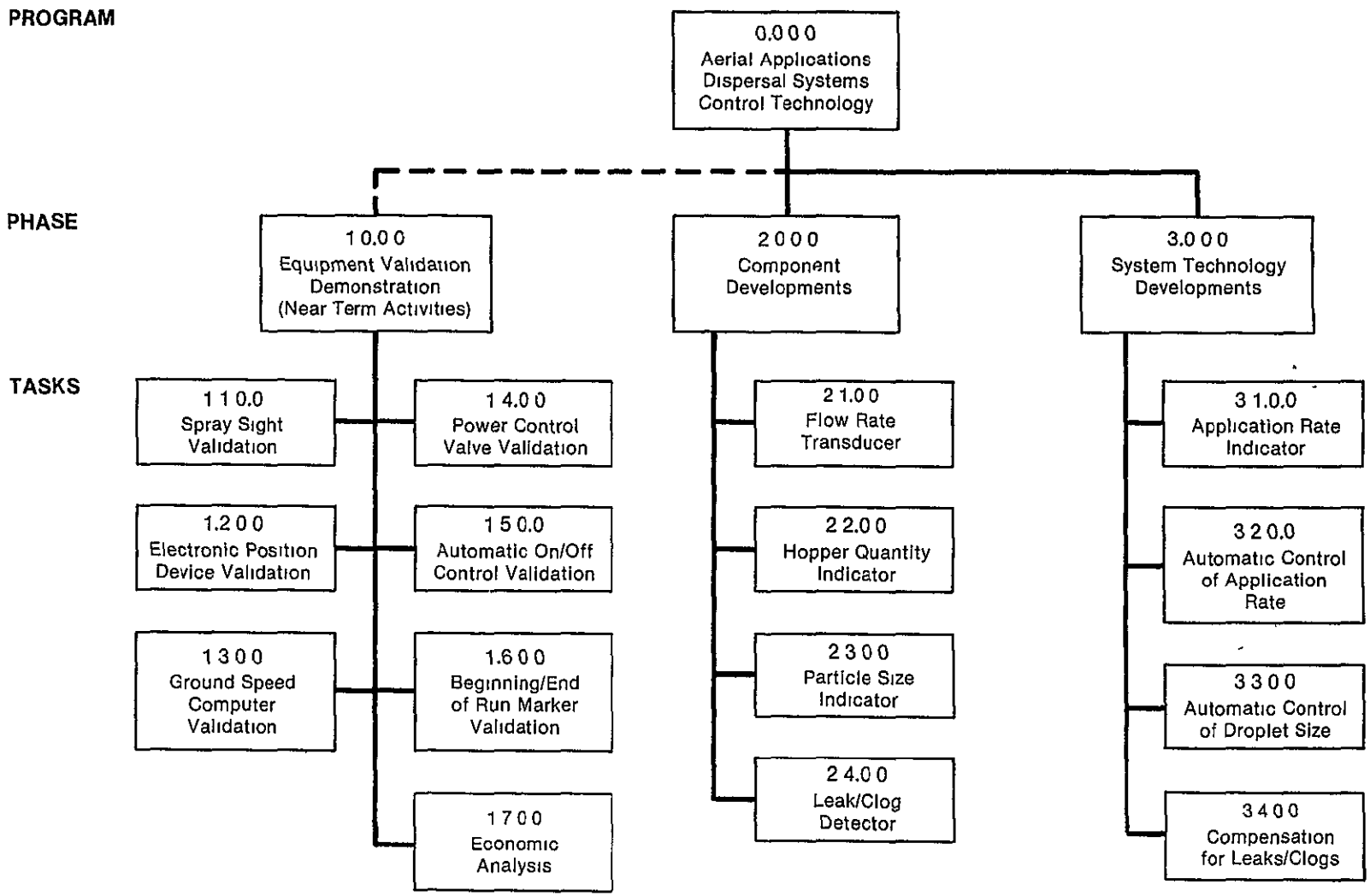

FIGURE 3.2 WORK BREAKDOWN STRUCTURE

Program Code	Phase Code	Task Code	Subtask Code	Description
0000				Equipment Validation Demonstration
	1.0.00			Equipment Validation Demonstration
		1100		Spray Sight Validation
		12.00		Electronic Positioning Device Validation
		1300		Ground Speed Computer Validation
		14.00		Power Control Valve Validation
		1500		Automatic End of Field On/Off Control Validation
		1600		Beginning and End of Run Marker Validation
	2000			Component Development
		21.00		Flow Rate Transducer
			211.0	Investigation of Flow Rates
			2.12.0	Investigation of Strain Gauges
			2.13.0	Investigation of Load Cells
			2.140	Evaluation of Concepts
		220.0		Hopper Quantity Indicator
			22.10	Investigation of Graduated Scale
			2220	Investigation of Surface Level Indicator
			223.0	Investigation of Acoustic Gauge
			224.0	Evaluation of Concepts
		230.0		Particle Size Indicator
		2.400		Leak/Clog Detector
			24.10	Evaluation of Flow Differential
			24.20	Evaluation of Acoustic Devices
			2430	Evaluation of Fiber Optics
			2440	Evaluation of Concept
			2.450	Construction of Leak/Clog Detector
		25.00		Compensation for Leak/Clogs
			2510	Investigate Use of Adjacent Dormant Nozzles
			2520	Investigate Adjustment of Malfunctioning Nozzle
	30.00			System Technology Developments
		3100		Application Rate Indicator
			3110	Development of Computer Program
			312.0	Integration of Inputs
			3130	Development of Microprocessor and Gauge
		320.0		Automatic Control of Application Rate
			32.10	Develop Computer Program
			32.20	Integration of Inputs
			3230	Development of Microprocessor and Regulator
		330.0		Automatic Control of Droplet Size
			3310	Atmospheric Modeling
			3320	Electrically Controlled Nozzles
			33.3.0	System Development

Figure 3.3
Detailed Work Breakdown Structure

Phase 1.0.0.0 Equipment Validation Demonstration

This phase consists of demonstration tasks using off-the-shelf equipment with minimal modifications to acquire field test data on the incremental benefits to ag air operators of investments in this type of equipment. These tasks are considered to be short-term activities that can be completed in about one year or less of overall effort. This phase of effort consists of seven tasks as shown in Figure 3.3, but does not involve separate subtasks.

- Task 1.1.0.0 - Spray Sight Validation
  Responsibility - LRC, WFC (Support)

  An important element of this task is to acquire field test data on the use of the three alternative spray sights discussed in Chapter II to improve on/off control of ag air spray systems. The alternative equipments to be demonstrated include a simple fixed template, a shock-mounted mechanical sight, and a Heads Up Display. It is anticipated that these sights can be obtained for application testing by modifying existing off-the-shelf civil or military hardware. The objective of the tests would be to determine the relative value of such spray sights to ag air operations.

- Task 1.2.0.0 - Electronic Position Device Validation
  Responsibility - LRC, WFC (Support)

  The objective of this task is to acquire field test data on end of field on/off control benefits to be derived from use of an electronic positioning device. This test could be carried out with equipment now on the market to determine equipment characteristics and related operational benefits that could be used in the development of a fully automated system. Correlative activities would include conducting human factors experiments on cockpit displays, such as left-right indicators, and optimum location of control panels.

- Task 1.3.0.0 - Ground Speed Computer Validation
  Responsibility - LRC, WFC (Support)

  The objective of this task is to determine the practicability of computing ground speed from electronic position device measurements as compared to doppler radar devices. Such tests could be conducted concurrently with Task 1.2.0.0 to determine the most cost-effective method for deriving ground speed information and its utility for achieving desired spray coverage.

- Task 1.4.0.0 - Power Control Valve Validation
  Responsibility - LRC, WFC (Support)

  Electrically operated control valves are available as optional equipment and currently used on about 25% of the ag aircraft.

In the simplest, most common configuration, power control is accomplished by pilot activation of an on/off switch. When coupled with an electronic positioning device, the on/off control can be triggered by position signals indicating the beginning and end of a spraying run. The objective of the task is to conduct field tests concurrently with Task 1.2.0.0 to determine the benefits, e.g., accuracy and repeatability, of using powered control valves in ag air operations. The test should provide comparative data on beginning and end of run positions for ag aircraft with manually operated valves and powered control valves operated by the pilot.

- Task 1.5.0.0 - Automatic End of Field On/Off Control Validation
  Responsibility - LRC, WFC (Support)

  This task is an extension of the field tests conducted under Task 1.4.0.0 by coupling an electronic positioning device with electric powered control valves to automatically turn-on and turn-off the spray system at the proper activation positions. The objective of the task is to measure under operating conditions, the accuracy and repeatability of spray coverage using an electronic positioning device with and without the automatic on/off control feature.

- Task 1.6.0.0 - Beginning and End of Run Marker Validation
  Responsibility - LRC, WFC (Support)

  This task is correlative to Task 1.1.0.0. The use of markers has been suggested as a method for calibrating a spray sight and aiding the pilot in determining on/off spray control accuracy. The objective of this task is to verify by demonstration flights, the anticipated benefits of using markers to calibrate spray sight accuracy.

- Task 1.7.0.0 - Economic Analysis
  Responsibility - LRC

  This task is an economic study to determine the cost savings that could be achieved by ag air operations from implementation of improvements to liquid and dry dispersal system controls. The study would utilize the results of Phase 1 validation tests to document the economic benefits to be derived from making near-term investments for implementing state-of-the-art hardware in ag aircraft. The study will also address the economic benefits that could be achieved from technology developments in Phase 2 and 3.

Phase 2.0.0.0 Component Development

The Component Development phase consists of four tasks for extension of component technology required for improving ag air operations.

- Task 2.1.0.0 - Flow Rate Transducer for solids, Responsibility - LeRC
- Task 2.2.0.0 - Hopper Quantity Indicator, Responsibility - LeRC
- Task 2.3.0.0 - Particle Size Indicator, Responsibility - LeRC
- Task 2.4.0.0 - Leak/Clog Detector, Responsibility - LeRC

Task 2.1.0.0 - Flow Rate Transducer. The objective of this task is to investigate practical, feasible approaches and develop a viable, functional capability for measuring the flow rate of solid, as well as liquid, materials dispensed in ag air operations. The major emphasis is to solve the problem of measuring the flow of dry materials. This effort will consist of four subtasks indicated by the Detailed Work Breakdown Structure shown in Figure 3.3.

Investigation of Flow Rates (Subtask 2.1.1.0). This effort involves investigating the feasibility of a turbine device that operates in the flow of solid materials and responds to flow rate similar to a liquid "flowrater" device, i.e., the RPM of the device increases with the flow and can be calibrated for the density of materials being dispensed.

Investigation of Strain Gauges (Subtask 2.1.2.0). This subtask will investigate the feasibility of using strain gauges attached to a sliding plate in the duct wall to measure flow of materials dispensed through the duct. In this concept it is assumed that the stress on the duct wall is dependent on the flow of materials near the wall surface and, therefore, proportional to the overall flow rate.

Investigation of Load Cells (Subtask 2.1.3.0). The objective of this subtask is to investigate the feasibility of using weight difference measurements of load cells to determine flow rates of dry materials. This technique assumes that the hopper would be loosely constrained laterally and supported at the exit duct by use of load cells. The sum of the load cell measurements would then reflect the weight of the hopper and its contents, which may provide a means for determining flow rate.

Evaluation of Concepts (Subtask 2.1.4.0). The objective of this subtask is to evaluate the results of the investigation of alternative concepts and develop a viable approach for measuring the flow rate of dry materials dispensed by ag air operators.

Task 2.2.0.0 - Hopper Quantity Indicator. The objective of this task is to develop improved methods for indicating the quantity of dry materials residing in the hopper during ag air operations. Quantity gauges for liquid materials are generally available. The task involves four subtasks as listed in Figure 3.3 involving feasibility investigations of concepts for improving current capabilities and development of a viable technique for measuring the residue of dry materials in the hopper.

Investigation of Graduated Scale (Subtask 2.2.1.0). This subtask involves the investigation of improvements to current methods of using scale graduations on a window visible to the pilot. It includes an investigation of using lighted scales projected by mirrors or electronic means to an indicator easily read by the pilot.

Investigation of Surface Level Indicator (Subtask 2.2.2.0). This effort involves investigating the feasibility of adapting float level indicators commonly used in the design of liquid quantity gauges for measurement of dry material residue in a hopper. Related concepts, such as use of pressure plates, should also be included in the investigation of feasible technical approaches.

Investigation of Acoustic Gauge (Subtask 2.2.3.0). The objective of this subtask is to determine the feasibility of using acoustic techniques to measure the quantity of dry material residue in a hopper.

Evaluation of Concepts (Subtask 2.2.4.0). This subtask involves the evaluation of investigative results of alternative approaches considered. The objective of this subtask is to define and evaluate an improved, practical component for indicating to the pilot the quantity of dry material residue contained in the hopper during ag air operations.

Task 2.3.0.0 - Particle Size Indicator. As shown in Figure 3.3, this task involves three subtasks oriented providing the ag air pilot with a gauge for monitoring and control, by adjusting system pressure, the droplet size of liquid spray materials being emitted from the nozzle. One subtask involves the development of software defining the relationships between nozzle characteristics, liquid pressure and droplet size of the spray (Subtask 2.3.1.0). Another subtask covers the integration of inputs for liquid pressure and nozzle characteristics in a microprocessor and display gauge to provide usable information on droplet size to the pilot (Subtask 2.3.3.0).

Task 2.4.0.0 - Leak/Clog Detector. The objective of this task is to develop a device to alert the ag air pilot of a malfunction in the spray system from leaks and clogs in the dispersal nozzles. This effort involves five subtasks for evaluating several potential approaches for the design of such a device, selection of the most desirable concept and construction of a proof of concept leak/clog detector.

Evaluation of Flow Differential (Subtask 2.4.1.0). This subtask will investigate the feasibility of monitoring the pressure and flow in the

spray system line between the pump and spray boom as an approach to detecting leaks and clogs in the dispersal system.

Evaluation of Acoustic Devices (Subtask 2.4.2.0). This subtask will investigate the feasibility of configuring a sound-triggered sensing device similar to the Century Electronic Nozzle Monitor. The objective of this effort is to evaluate the effect such a device would have on currently employed aerial nozzles and modifications required for use in ag air dispersal systems.

Evaluation of Fiber Optics (Subtask 2.4.3.0). This subtask involves investigations to determine the accuracy required to detect leaks and/or clogs by using fiber optics to scan nozzle openings.

Evaluation of Concept (Subtask 2.4.4.0). This effort includes the comparative evaluation of the results of investigations of various concepts to select a design approach for a viable leak/clog detector.

Construction of Leak/Clog Detector (Subtask 2.4.5.0). The objective of this subtask is to construct a leak/clog detector for proof of concept testing.

Phase 3.0.0.0 System Technology Developments

The system Technology Development phase consists of four tasks for developing conceptual improvements to ag air dispersal control systems.

- Task 3.1.0.0 - Application Rate Indicator,
  Responsibility - LeRC
- Task 3.2.0.0 - Automatic Control of Application Rate,
  Responsibility - LeRC
- Task 3.3.0.0 - Automatic Control of Droplet Size,
  Responsibility - LeRC
- Task 3.4.0.0 - Compensation for Leaks/Clogs,
  Responsibility - LeRC

Task 3.1.0.0 - Application Rate Indicator. The objective of this task is to develop a system which takes inputs from (1) the flow rate transducer, (2) height above ground transducer and (3) ground speed computer, and displays to the pilot the rate at which he is applying his agricultural material. If adjustments are necessary they will be made by the pilot by either adjusting the pressure in the system, the height above the ground or the air speed. The task involves three subtasks as listed in Figure 3.3.

Development of Computer Program (Subtask 3.1.1.0). This subtask will develop a computer program which will consist of algorithms stored in the central processor. Evaluation loops will be included which will describe the influence variations in system pressure, swath width, and ground speed will have on the application rate.

Integration of Inputs (Subtask 3.1.3.0). This subtask will assure proper input data is available from the applicable transducers to enable accurate computation of the application rate.

Development of Microprocessor and Gauge (Subtask 3.1.3.0). This subtask involves the development of the microprocessor and gauge to compute and inform the pilot of the rate at which he is applying the agricultural material.

Task 3.2.0.0 - Automatic Control of Application Rate. The objective of this task is to enable the pilot to set a desired application rate and have the control system perform changes to the system pressure to enable even application. Although three subtasks are described, they closely resemble the effort envisioned for Task 3.1.0.0 and could replace those subtasks if a decision to move ahead with an automated system is made.

Develop Computer Program (Subtask 3.2.1.0). The algorithms would be the same for subtask 3.1.1.0. However, since it is envisioned that only pressure would be adjusted automatically, an additional loop would be included which would determine adjustments in pressure necessary to maintain a desired application rate.

Integration of Inputs (Subtask 3.2.2.0). This subtask would resemble Subtask 3.1.2.0 above.

Development of Microprocessor and Regulator (Subtask 3.2.3.0). This activity is to develop a microprocessor that in addition to determining the rate at which agricultural material is being dispensed (see Subtask 3.1.3.0) would also determine the adjustments in system pressure required to maintain a desired application rate. Output from the microprocessor would consist of the application rate to the application rate gauge and a signal to the pressure regulator to increase or decrease pressure in the system to achieve the desired application rate.

Task 3.3.0.0 - Automatic Control of Droplet Size. The objective of this task is to develop automatic control of droplet size to provide assurance to the pilot that deposit rate will more nearly resemble application rate. Three subtasks are envisioned for this subtask.

Atmospheric Modeling (Subtask 3.3.1.0). Droplets are influences by such factors as temperature, humidity, height above ground, air speed, base material etc., and although much effort has been expended towards perfecting algorithms which accurately describe the influence these parameters have on droplet size, additional effort is required. The output envisioned from this task are algorithms which not only determine the change in the size of the droplets that take place from dispersal to arrival to the target, but also the corrections to the nozzle needed to assure proper droplet size on the target.

Electrically Controlled Nozzles (Subtask 3.3.2.0). A variety of nozzle designs and spray concepts for controlling droplet size. This subtask

will evaluate the feasibility of controlling these nozzles such that adjustment in droplet size will be possible during spraying operations.

System Development (Subtask 3.3.3.0). This subtask will provide the technology necessary to automatically make adjustments to the nozzles to assure that the proper size of droplets are deposited on the target.

Task 3.4.0.0 - Compensation for Leaks/Clogs. The objective of this task is to investigate alternative methods for making adjustments in the dispersal system to compensate for leaks and clogs in the system. Two subtasks are included to investigate alternative approaches to solving the problem. One subtask will investigate the feasibility of activating adjacent dormant nozzles in the system (Subtask 3.4.1.0). The other subtask will investigate the feasibility of using adjustable nozzles to compensate for detected leaks and/or clogs (Subtask 3.4.2.0).

PROGRAM SCHEDULE

This section presents the performance schedules for the program activities described above. Three figures are presented:

- Figure 3.4 - Phase 1.0.0.0 Equipment Validation
- Figure 3.5 - Phase 2.0.0.0 Component Development
- Figure 3.6 - Phase 3.0.0.0 System Technology Developments.

It is noted that certain areas e.g., Task 2.1.0.0, can be accelerated by parallel efforts.

RESOURCES

The Aerial Application Control System Technology Program will draw upon the capabilities of three NASA Centers - LRC, LeRC, and WFC. This section presents the funding requirements for the program. Table 3.1 summarizes the annual resource requirements by center. Table 3.2 presents R&D funding profiles by Work Breakdown Structure and Task.

The resources estimated in the program plan were estimated based upon estimated manhours and material required. The procedure used was to cost each subtask.

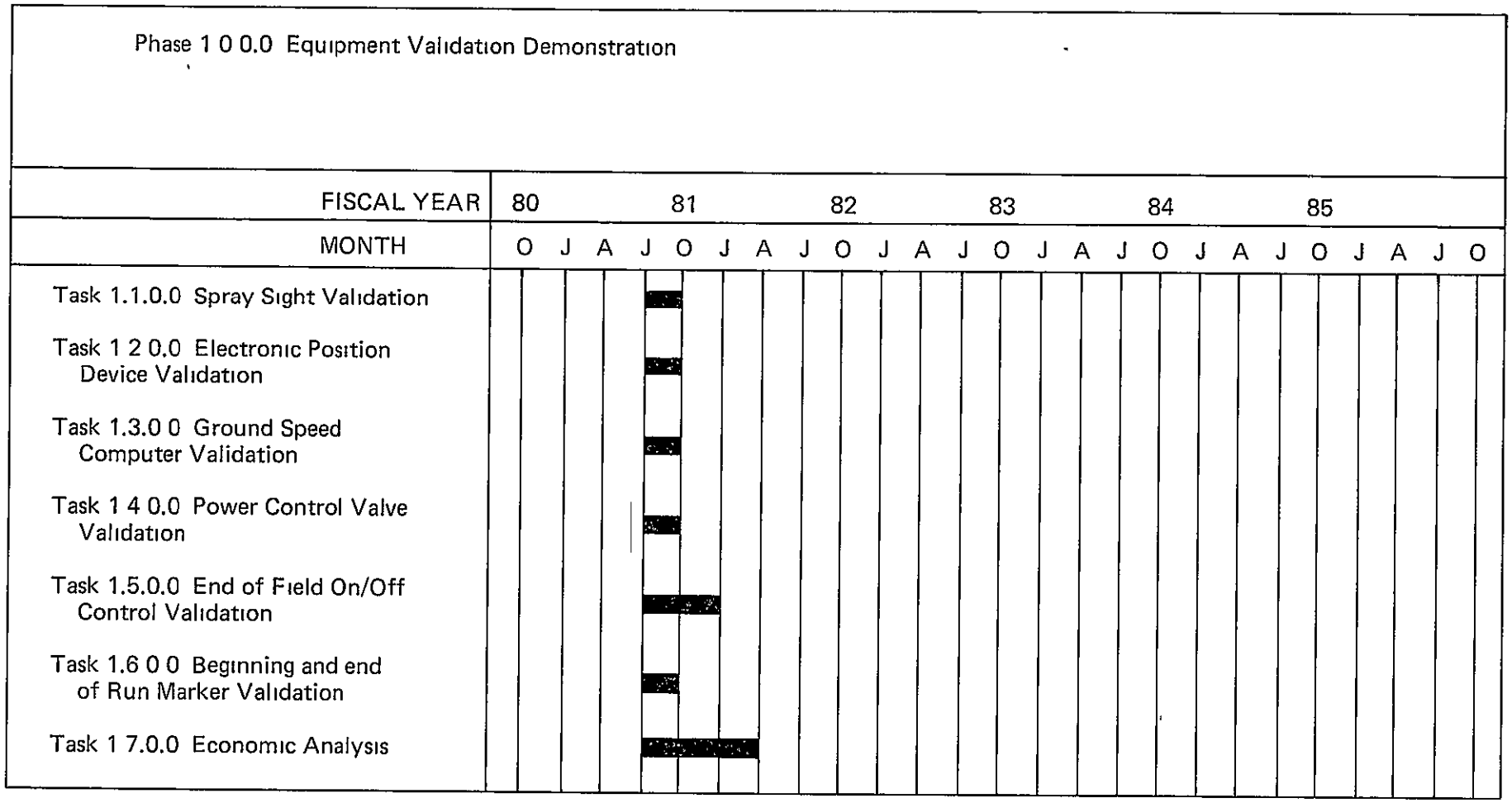

Figure 3.4
Equipment Validation

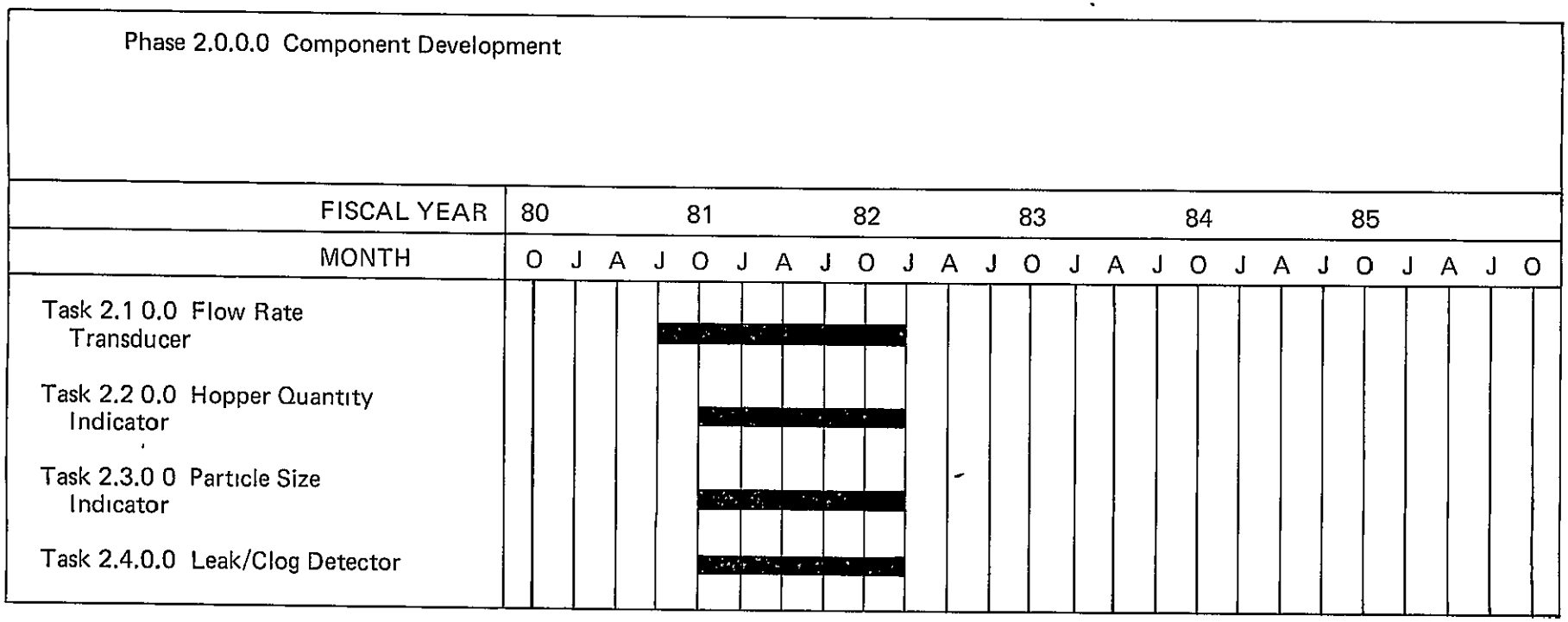

Figure 3.5
Component Development

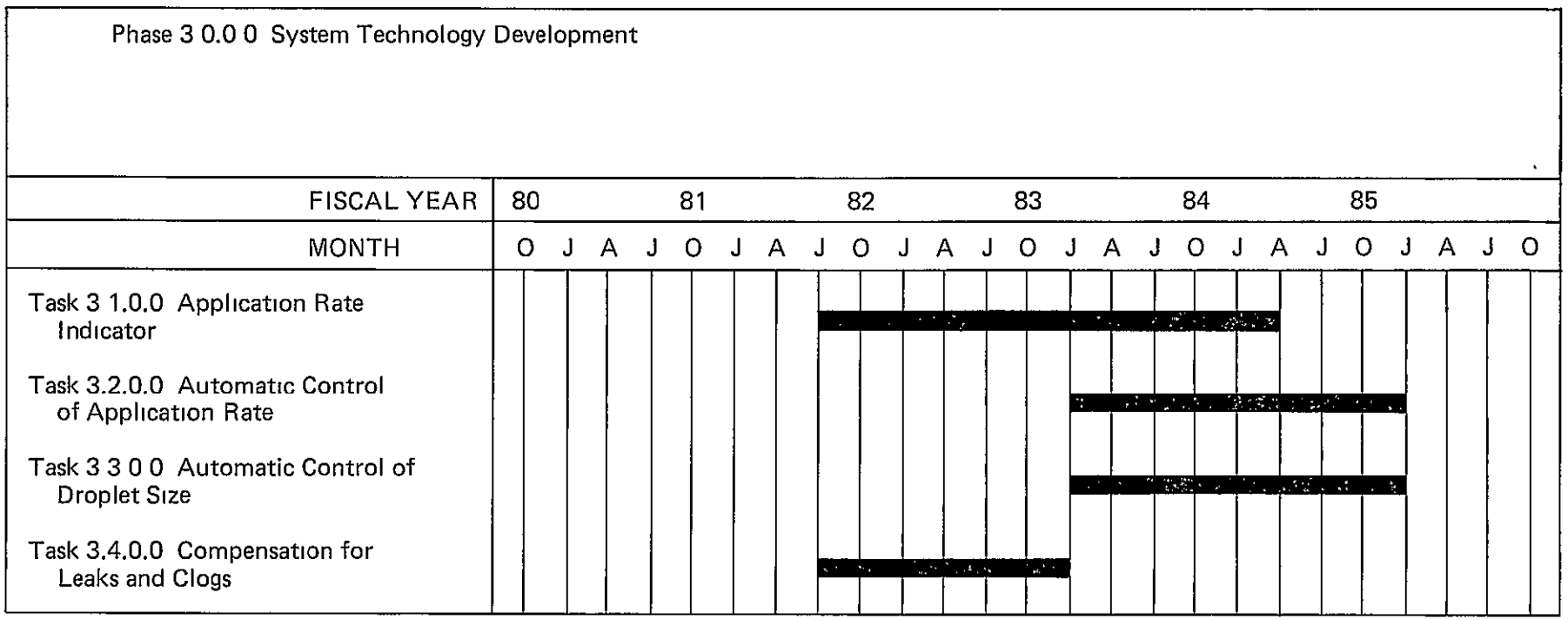

Figure 3.6
System Technology Developments

Table 3.1
Resource Requirements by Center
(Dollars in Thousands)

Center \ FY	80	81	82	83	84	85	Total
LRC	60	150	105	45	150	45	555
LeRC	–	75	15	30	30	15	165
WFC	60	45	–	–	30	30	165
Totals	120	270	120	75	210	90	885

Table 3.2
Resources Required by Task
(Dollars in Thousands)

Phase	Task	FY 80	81	82	83	84	85
1.0 0.0		120	15				
	1.1.0.0	30					
	1.2 0 0	45					
	1.3 0 0	30					
	1.4.0.0	*					
	1 5 0.0	15	15				
	1.6.0.0	*					
2 0.0.0			210	30			
	2 1 0 0		45				
	2 2.0.0		15				
	2 3.0 0		75	15			
	2 4 0.0		75	15			
3.0.0.0			45	90	75	210	90
	3.1 0.0			15	45	15	
	3 2.0.0				15	45	90
	3.3.0.0				15	150	90
	3 4 0.0		45	75			
Total		120	270	120	75	210	90

* ESTIMATE <$1K

IV. DISCUSSION OF RESULTS

The results of this effort are the detailed specifications of the improved control system configuration that were proposed for liquid and dry material dispensing systems.

The performance deficiencies of existing liquid and dry dispersal system controls were identified. Proposed improved control system configurations were defined. Based on this examination and specification, the present deficiencies in application rate accuracy, droplet size control, position turn on and shut off, application profile uniformity, and swath width constancy can be alleviated.

PRECEDING PAGE BLANK NOT FILMED

V. CONCLUSIONS

The following conclusions were reached as a direct result of the subject effort:

1. Improved application performance will be derived from implementation of any of the proposed control system improvements.

2. Economic benefits may be realized by the ag operator (reduced insurance premium) and the farmer (reduced chemical requirements) if these improved systems are used.

3. The aerial application marketplace is too small to warrant an extensive development program by ag equipment manufacturers.

4. NASA's participation is required to accelerate the commercialization of improved control configurations by conducting a validation program for near term improvements, sponsoring research into the synthesis of required components, and performing the integration of new technology into current and future dispersal control systems.

PRECEDING PAGE BLANK NOT FILMED

PRECEDING PAGE BLANK NOT FILMED

REFERENCES

1. Akesson, Norman B. and Yates, Wesley E.; The Use of Aircraft in Agriculture; Rome; 1974.

2. LORAN-C USER HANDBOOK; CG-462; U. S. Coast Guard; Washington, D.C.; August 1974.

3. L. P. Tuttle; LORAN-C for Automatic Vehicle Tracking; TELCOM, Inc.; Vienna, Virginia; 1976.

4. "Aerial Spraying: A Simulation of Factors Influencing the Distribution and Recovery of Liquid Droplets," Trayford, R. S. and Welch, L. W.; Journal of Agricultural Engineering Research; (1977).

PRECEDING PAGE BLANK NOT FILMED

Report Distribution

Recipient	Address
NASA Project Manager (10 copies)	NASA Lewis Research Center Attn: Robert Baumbick M.S. 100-1 21000 Brookpark Road Cleveland, OH 44135
NASA Lewis Contracting Officer (1 copy)	NASA Lewis Research Center Attn: Al Puher M.S. 500-312 21000 Brookpark Road Cleveland, OH 44135
NASA Headquarters technical information abstracting and disemination facility (25)	NASA Scientific and Technical Information Facility Attn: Accessioning Department P.O. Box 8757 Balt./Wash. International Airport MD 21240
Lewis Library (2)	NASA Lewis Research Center Attn: Library (M.S. 60-3) 21000 Brookpark Road Cleveland, OH 44135
Lewis Management Services Division (1)	NASA Lewis Research Center Attn: Report Control Office M.S. 5-5 21000 Brookpark Road Cleveland, OH 44135
Angus J. Howitt (1)	Dept. of Entomology Michigan State University East Lansing, MI 48824
Bill Hatfield (1)	R#2 12145 Dickerson Rd. Nunica, MI 49448
Chester M. Himmel, PhD. (1)	Department of Entomology University of Georgia College of Agriculture Athens, GA 30601
Dr. L. F. Bouse (1)	U.S. Department of Agriculture Agricultural Research Service Southern Region Texas A&M University College Station, TX 77843

Recipient	Address
Dr. Lawrence O. Roth, P.E. (1)	Agricultural Engineering Dept. Oklahoma State University Stillwater, OK 74074
Alfred Dahl, President (1)	Dahl Air Spray, Inc. R. R. 1 Cogswell, ND 58017
Mervin K. Strickler, Jr. (1)	Department of Transportation Federal Aviation Administration 800 Independence Ave., S.W. Washington, DC 20591
George S. Sanders (10)	Agrinautics 1333 Patrick Lane McCarran Airport Las Vegas, NV 89119
Bill Strack (1)	NASA Lewis Research Center 21000 Brookpark Road M.S. 500-307 Cleveland, OH 44135
Bruce Holmes (5)	NASA Langley Research Center M.S. 247 Safety and Operating Branch Hampton, VA 23665
Robert Carr (5)	Wallops Flight Research Center Wallops Island, VA 23337