N O T I C E

THIS DOCUMENT HAS BEEN REPRODUCED FROM MICROFICHE. ALTHOUGH IT IS RECOGNIZED THAT CERTAIN PORTIONS ARE ILLEGIBLE, IT IS BEING RELEASED IN THE INTEREST OF MAKING AVAILABLE AS MUCH INFORMATION AS POSSIBLE

"Made available under NASA sponsorship
in the interest of early and wide dissemination of Earth Resources Survey Program information and without liability for any use made thereof."

80-10077
NASA CR-
160461
JSC-14634
JAN 28 1980

National Aeronautics and Space Administration

Lyndon B. Johnson Space Center
Houston, Texas 77058

EARTH OBSERVATIONS DIVISION

SPACE AND LIFE SCIENCES DIRECTORATE

"AS-BUILT" DESIGN SPECIFICATIONS OF THE LANDSAT IMAGERY VERIFICATION AND EXTRACTION SYSTEM (LIVES)

Job Order 71-485 & 76-662

(E80-10077) AS-BUILT DESIGN SPECIFICATIONS OF THE LANDSAT IMAGERY VERIFICATION AND EXTRACTION SYSTEM (LIVES). VOLUME 1: TEST AND APPENDICES (Lockheed Engineering and Management) 335 p HC A15/MF A01 CSCL 05B G3/43

N80-19586

Unclas
00077

Prepared by
Lockheed Electronics Company, Inc.
Systems and Services Division
Houston, Texas

Contract NAS 9-15800

December 1979

LEC-12904
VOLUME 1, TEXT
AND APPENDICES

JSC-14634

"AS-BUILT" DESIGN SPECIFICATIONS OF THE LANDSAT IMAGERY VERIFICATION AND EXTRACTION SYSTEM (LIVES)

Prepared By

J. Everette
A. Rios
J. Good
C. Horton
D. McCarley
M. Nieves
Lockheed Electronics Company, Inc.
Systems and Services Division

Approved By

LEC	NASA
G. W. Buchman, Project Manager	John C. Lyon, Task Monitor

PREPARED BY
LOCKHEED ELECTRONICS COMPANY, INC.
For

EARTH OBSERVATIONS DIVISION
NATIONAL AERONAUTICS AND SPACE ADMINISTRATION
LYNDON B. JOHNSON SPACE CENTER
HOUSTON, TEXAS

December 1979

LEC-12904
VOLUME 1, TEXT
AND APPENDICES

N80-19586
NASA-CR-160441

ORIGINAL PAGE IS
OF POOR QUALITY

JSC-14636

CHANGE SHEET
FOR THE
"AS-BUILT" DESIGN SPECIFICATION OF THE
LANDSAT IMAGERY VERIFICATION AND EXTRACTION SYSTEM
(LIVES)

Change 1

September 10, 1980

Approved By

LEMSCO	NASA
J. I. Morrow, Supervisor Software Section	J. M. Sulester, Technical Monitor System and Facilities

---

After the attached replacement pages have been inserted, insert this change sheet between the cover and page 1 and write on the cover "Change 1 inserted".

1. Remove page xi.
2. Insert replacement page xi.
3. Insert Interim Appendix B in its entirety.

Signature of person incorporating change

Date

LEC-12904
CHANGE 1

1. Report No.	2. Government Accession No.	3. Recipient's Catalog No.
JSC-14634		

4. Title and Subtitle	5. Report Date
EOD/Space and Life Sciences Directorate "As-Built" Design Specifications of the Landsat Imagery Verification and Extraction System (LIVES)	December 1979
	6. Performing Organization Code: SF6
7. Author(s): J. Everette, A. Rios, J. Goode, C. Horton, D. McCarley, M. Nieves	8. Performing Organization Report No.: LEC-12904
9. Performing Organization Name and Address: Lockheed Engineering & Management Services Company Inc, Systems and Services Division, Houston, Texas 77058	10. Work Unit No.
	11. Contract or Grant No.: NAS 9-15800
12. Sponsoring Agency Name and Address: National Aeronautics and Space Administration, Lyndon B. Johnson Space Center, Houston, Texas 77058 (J. M. Sulester, Tech. Monitor)	13. Type of Report and Period Covered: "As-Built" Design
	14. Sponsoring Agency Code

15. Supplementary Notes

16. Abstract

This document consists of eight volumes: Volume I, is a text and appendix and Volumes II through VIII contain computer listings of the programs and subprograms which comprise the LIVES system.

17. Key Words (Suggested by Author(s))	18. Distribution Statement
Landsat Imagery Imagery Extraction	

19. Security Classif. (of this report)	20. Security Classif. (of this page)	21. No. of Pages	22. Price*
Unclassified	Unclassified	192	

*For sale by the National Technical Information Service, Springfield, Virginia 22161

JSC Form 1424 (Rev Nov 75) NASA — JSC

JSC-14634

This document consists of eight volumes:

Vol 1	--	Text and Appendix
Vol 2 thru Vol 7	--	Listings for Image Processor and Support Processor
Vol 8	--	Geo-Reference Table (WRS, rows and paths)

ABSTRACT

The detailed design of the Landsat Imagery Verification and Extraction System (LIVES) as it was built and delivered, is presented in this document. After introductory sections containing an overview of the entire system, individual programs are presented in a systematic way, with details on all of the software components. Included are formats and contents of data bases and special files.

DETAILED TABLE OF CONTENTS

Section		Page
1.	SCOPE	1-1
1.1	SCOPE OF THIS DOCUMENT	1-1
1.2	BACKGROUND OF LIVES	1-1
1.3	ENVIRONMENT AND USE OF LIVES	1-2
2.	APPLICABLE DOCUMENTS	2-1
2.1	SPECIFICATIONS FOR DOCUMENTS	2-1
2.2	PROGRAMMED DOCUMENTATION OF LIVES	2-2
2.3	DOCUMENTATION OF THE HIGH DENSITY TAPE REFORMATTING SYSTEM (HDTRS)	2-3
2.4	DOCUMENTATION OF EXTERNAL SYSTEMS	2-3
2.5	INFORMATION ON MAJOR SOFTWARE COMPONENTS	2-3
2.6	INFORMATION ON MAJOR EQUIPMENT	2-3
3.	DESCRIPTION OF HARDWARE	3-1
3.1	OVERVIEW	3-1
3.2	COMPUTERS	3-1
3.3	DISKS	3-1
3.4	HIGH DENSITY TAPES	3-3
4.	OVERVIEW OF SOFTWARE	4-1
4.1	SYSTEM OVERVIEW	4-1
4.2	PROGRAMS IN LIVES	4-5
4.3	DATA BASES	4-8
4.3.1	FULL SCENE DATA BASE	4-8
4.3.2	SEARCH AREA DATA BASE	4-9

DETAILED CONTENTS (Continued)

Section		Page
4.3.3	REFERENCE IMAGE DATA BASE	4-9
4.3.4	SCREENING MAP DATA BASE	4-9
4.3.5	PROCESS CONTROL AND STATUS DATA BASE	4-10
5.	INDEPENDENT PROGRAMS	5-1
5.1	ADD AREA-OF-INTEREST DEFINITIONS, AOIADD	5-3
5.1.1	BATCH RUN STREAM, AOIADD.BIS	5-3
5.1.2	ADD AREA-OF-INTEREST PROGRAM AOIADD	5-8
5.1.3	BATCH RUNSTREAM DELAY PROGRAM, WAITR1	5-13
5.2	MODIFY (UPDATE) AREA-OF-INTEREST DEFINITION, AOIUPD	5-15
5.2.1	BATCH RUN STREAM, AOIUPD.BIS	5-15
5.2.2	UPDATE AREA OF INTEREST PROGRAM, AOIUPD	5-19
5.2.3	BATCH RUNSTREAM DELAY PROGRAM, WAITR2	5-21
5.3	DELETE AREA-OF-INTEREST DEFINITION, AOIDEL	5-26
5.3.1	BATCH RUN STREAM, AOIDEL.BIS	5-26
5.3.2	DELETE AREA-OF-INTEREST PROGRAM, AOIDEL	5-30
5.3.3	BATCH RUNSTREAM DELAY PROGRAM, WAITR3	5-35
5.4	WORLD REFERENCE (WRS) ROW PATH GENERATOR, RPREAD	5-37
5.4.1	MAIN DRIVING ROUTINE, RPREAD	5-37
5.4.2	CALCULATE AREA-OF-INTEREST COORDINATES SUBROUTINE, MAINGN	5-40
5.4.3	COMPARE AREA-OF-INTEREST WITH SCENE, SUBROUTINE RPGEN2	5-41
5.4.4	UTM COORDINATES CONVERSION, TMECTR	5-43

DETAILED CONTENTS (Continued)

Section		Page
5.5	REFERENCE IMAGE LOAD PROCESSOR, REFLOD.	5-47
5.5.1	REFERENCE IMAGE LOAD, REFLOD	5-47
5.6	GHIT PROCESSOR, GHIT.	5-50
5.6.1	MAIN ROUTINE, GHIT	5-52
5.6.2	READ PARAMETERS SUBROUTINE, GRDPRM (NOSAF)	5-57
5.6.3	GHIT INITIALIZATION SUBROUTINE, GINIT. .	5-57
5.6.4	WRITE COMMAND FILE SUBROUTINE, WRTCM4	5-58
5.6.5	READ NON-IMAGERY DATA ON SCENE SUBROUTINE, RDSCN.	5-59
5.6.6	SELECT THE AREAS OF INTEREST SUBROUTINE SELAIS	5-59
5.6.7	SAVE PC&S ACQUISITION DESCRIPTION UPDATES SUBROUTINE, SAVEAC	5-61
5.6.8	SAVE SCENE UPDATES SUBROUTINE, SAVESC. .	5-62
5.6.9	BATCH RUN STREAM, GHIT.BIS	5-63
5.6.10	BATCH RUN STREAM DELAY PROCESSOR WAITR4	5-68
5.6.11	LIMS DATA BASE REORGANIZATION PROGRAM, PACK	5-70
5.6.12	FILE OPENING SUBROUTINE, FLOPEN	5-76
5.6.13	DATA RECORDS COMPRESSOR SUBROUTINE, PACK1	5-79
5.6.14	DATA RECORDS INDEX COMPRESSOR SUBROUTINE, PACK2	5-82

DETAILED CONTENTS (Continued)

Section		Page
5.6.15	KEY RECORDS COMPRESSOR SUBROUTINE, PACK3.	5-85
5.6.16	KEY RECORDS INDEX COMPRESSOR SUBROUTINE, PACK4.	5-89
5.7	EXTRACT PROCESSOR, EXTRCT	5-92
5.7.1	MAIN PROGRAM, EXTRCT.	5-92
5.7.2	READ TABLE OF CONTENTS, RDTOC	5-95
5.7.3	CHECK STATUS OF DISK, CKSTDK	5-101
5.7.4	READ DISK, RDDSK.	5-101
5.7.5	READ FULL SCENE PARAMETERS, RFSPRM. . .	5-102
5.7.6	PARAMETER INITIALIZATION SUBROUTINE, PINT	5-102
5.7.7	READ AN ACQUISITION-DESCRIPTION RECORD, RDACQD.	5-103
5.7.8	READ AREA OF INTEREST, RDAOI.	5-103
5.7.9	READ SCENE DESCRIPTION, RDSCEN.	5-104
5.7.10	COMPUTE CORNER PIXEL, CCPIXL	5-104
5.7.11	TRANSFORM LATITUDE AND LONGITUDE, TMECTR	5-105
5.7.12	WRITE IMAGERY FILE HEADER, WRTIHD. . .	5-106
5.7.13	GET LINES OF PIXELS, GETLNP.	5-106
5.7.14	WRITE IMAGERY BUFFER WRTBUF.	5-107
5.7.15	WRITE UPDATE RECORD, UPDADR.	5-108
5.7.16	UPDATE PC&S DATA BASE, UPDPCS.	5-108

DETAILED CONTENTS (CONTINUED)

Section		Page
5.8	CONDITIONING PROCESSOR, CONDTN.	5-110
5.8.1	MAIN PROGRAM, CONDTN	5-112
5.8.2	AREA OF INTEREST PROCESS SUBROUTINE, AOIPRO	5-117
5.8.3	INITIALIZE FILBUF SUBROUTINE, INTGP. . .	5-123
5.8.4	CREATE HEADER BLOCK SUBROUTINE, PUTHDR .	5-127
5.8.5	FILL BUFFER SUBROUTINE, FILBUF	5-129
5.8.6	SUN ELEVATION CORRECTION FACTOR SUBROUTINE, FACTOR	5-132
5.8.7	EXTRACT FOUR BANDS PER PIXEL SUBROUTINE, GETPIX	5-133
5.8.8	EVALUATE PIXEL SUBROUTINE, SCREEN. . . .	5-135
5.8.9	REJECT BY CLOUD THRESHOLD SUBROUTINE, REJECT	5-137
5.8.10	BUILD SCREENING MAP FILE, PUTPIX. . . .	5-138
5.8.11	FIND AND SAVE EXTRA PIXELS, SAVEP . . .	5-139
5.8.12	CALCULATE BIASES AND GAINS SUBBROUTINE, BANDG	5-140
5.9	SCREENING AND TRANSLATION PROCESSOR, SCRNTR . .	5-141
5.9.1	SCREENING AND TRANSLATION MODULE MAIN PROGRAM, STMMP	5-149
5.9.2	EXHIBIT AND CHANGE DISPLAY WINDOW PARAMETERS SUBROUTINE, DIWPA	5-151
5.9.3	JULIAN TO CALENDAR DATE CONVERSION SUBROUTINE, JUL.	5.-156
5.9.4	CALENDAR TO JULIAN DATE CONVERSION SUBROUTINE, JULIAN	5-156

DETAILED CONTENTS (CONTINUED)

Section			Page
	5.9.5	PROMPT USER AND READ TERMINAL KEYBOARD SUBROUTINE, PURTI.	5-157
	5.9.6	READ USER IDENTIFICATION CODE, RUDIC .	5-159
	5.9.7	DISPLAY AREA AND ACCEPT OR REJECT SUBROUTINE, SCREEN	5-161
	5.9.8	SELECT NEXT AREA FOR SCREENING OR TRANSLATION SUBROUTINE, SNAST.	5-163
	5.9.9	SCREENING OR TRANSLATION IMAGE DISPLAY SUBROUTINE, STIDR	5-165
	5.9.10	DISPLAY CONTROL POINTS AND TRANSLATE IMAGES SUBROUTINE, TRANSL	5-168
	5.9.11	LONG MESSAGE FILE, DSCWRT	5-168a
	5.9.12	SHORT MESSAGE FILE, DSHORT.	5-168a
	5.9.13	HELP FILE, HELP	5-168a
	5.9.14	DEFAULT WINDOW PARAMETERS PROGRAM, DEFAULT	5-168a
5.10	CCT PROCESSOR, CCTGEN		5-172
	5.10.1	GENERATE CCT PROGRAM, CCTGEN.	5-173
	5.10.2	CCT RECOVERY AND TAPE ASSIGNMENT SUBROUTINE, CCTREC.	5-179
	5.10.3	WRITE CCT TRANSACTION FILE SUBROUTINE, CCTTRN.	5-181
	5.10.4	WRITE UNIVERSAL TAPE SUBROUTINE, WRTAPE.	5-182
	5.10.5	CONVERT CALENDAR DATE TO JULIAN DATE, JULIAN	5-186
	5.10.6	CONVERT JULIAN DATE TO CALENDAR DATE, CALNDR	5-186

DETAILED CONTENTS (CONTINUED)

Section		Page
5.11	ARCHIVE UPDATE PROGRAM, ARCUPD.BIS.	5-187
5.12	DATA BASE RECOVERY	5-189
5.12.1	LIVES RECOVERY BATCH RUN, LIVESRCVY.BIS	5-189
5.12.2	FIRST RECOVERY PROGRAM, RCVY1	5-193
5.12.3	SECOND RECOVERY PROGRAM, RCVY2. . . .	5-195
5.12.4	RECOVERY REPORT SUBROUTINE, RECRPT. .	5-197
5.12.5	THIRD RECOVERY PROGRAM, RCVY3	5-199
5.13	REPORTS	5-201
5.13.1	TAPE ORDER PROCESSING SUMMARY	5-201
5.13.2	PREPROCESSING ACTIVITY SUMMARY REPORT.	5-203
5.13.3	EXPECTED A OF I SUMMARY REPORT . . .	5-205
5.13.4	EXTRACTION PROCESSING SUMMARY REPORT.	5-207
5.13.5	SCREENING AND REGISTRATION PROCESSING SUMMARY REPORT.	5-209
5.14	DIRECT EXTRACTION PROCESSOR, EXTWOT	5-212
5.14.1	DRIVER PROGRAM, EXTWOT.	5-213
5.14.2	READ SYSTEM PARAMETERS, GRDPRM. . . .	5-213
5.14.3	READ NON-IMAGERY DATA, RDSCN.	5-213
5.14.4	SELECT AREAS OF INTEREST, SELAIS. . .	5-216
5.14.5	READ AREA-OF-INTEREST RECORD, RDAIS .	5-217
5.14.6	WRITE ACQUISITION DESCRIPTION RECORD, SAVACR	5-217

DETAILED CONTENTS (CONTINUED)

Section Page

5.14.7 COMPUTE CORNER PXIEL, CCPIXL. 5-217

5.14.8 WRTIE IMAGERY FILE HEADER, WRTIHD . . . 5-218

5.14.9 GET LINES OF PIXELS, GETLNP 5-218

5.14.10 UPDATE PC&S DATA BASE, UPDPCS. 5-218

5.14.11 SAVE SCENE DESCRIPTION, SAVESC 5-218

5.14.12 MOVE LINES OF PIXELS, MOVLNP 5-218

5.15 ONLINE LIVES QUERY PROGRAM, OLIVES 5-219

5.16 SAVE AND RESTORE MASTER (ARCHIVE) DATA BASE . . 5-223

6. SHARED OR COMMON SOFTWARE. 6-1

6.1 DATA MANAGEMENT SYSTE HOST LANGUAGE INTERFACE MODIFICATIONS 6-1

6.1.1 DMS HOST LANGUAGE INTERFACE, EXCDMS. . . . 6-3

6.1.2 MAIN PROGRAM, FSEL 6-5

6.1.3 MAIN PROGRAM, SEL 6-6

6.1.4 FLIMS UNITS ASSIGNMENT, FUNITS 6-7

6.1.5 LIMS UNIT ASSIGNMENT, UNITS 6-8

6.1.6 GENERATE ACCESS NUMBER, ACCNO. 6-9

6.1.7 ATTACH FILES, ATTACH 6-10

6.1.8 ADD AND UPDATE FROM FILE, AUFILE 6-11

6.1.9 INITIALIZE DMS, BEGIN 6-12

6.1.10 CONTROL AUFILE, CAUFILE 6-13

6.1.11 CHANGE FIELD CONTROL ROUTINE, CFCR. . . . 6-14

6.1.12 MAIN COMMAND INTERPRETER, CIMAIN. 6-15

DETAILED CONTENTES (Continued)

Section		Page
6.1.13	REPORT COMMAND INTERPRETER, CIRP. . .	6-16
6.1.14	STATISTICAL COMPUTATIONS ROUTINE, CMPUTE	6-17
6.1.15	DISPLAY A FORMATTED RECORD ROUTINE, DISFMT	6-18
6.1.16	DISPLAY FORMAT DEFINITION, DISPDDD . .	6-19
6.1.17	INTERNAL RECORD DISPLAY, DISPLA. . . .	6-20
6.1.18	DATE-INTEGER CONVERSION, DTEINT. . . .	6-21
6.1.19	TERMINATION, END	-22
6.1.20	FAMILY TREE FORMAT RETRIEVAL, FTFMT. .	6-23
6.1.21	GET CHILD, GETCLD.	6-24
6.1.22	GET PARENT, GETPAR	6-25
6.1.23	PRINT HEADER ROUTINE, HEADER	6-26
6.1.24	CHARACTER TO NUMBER CONVERTER, INPARM.	6-27
6.1.25	JOINT-FORMATTED AND DISPLAY-FORMATTED CONTROL ROUTINE, JFDFCR.	6-28
6.1.26	JOINT-SELECT-NONKEY AND SELECT-NONKEY CONTROL ROUTINE, JNSNCR.	6-29
6.1.27	GENERATE PARENT IDENTIFICATION, PRNTID	6-30
6.1.28	SORT SET, SORTS.	6-31
6.1.29	SPECIFY SET, SPCSET.	6-32
6.1.30	SQUEEZE OUT EXTRANEOUS BLANKS, SQZE. .	6-33
6.1.31	STATUS TABLE DISPLAY, STATUS	6-34
6.1.32	TRANSFORM, TFORM	6-35
6.1.33	TRANSFORM TO WORKING BUFFER, TFORMW. .	6-36

DETAILED CONTENTS (Continued)

Section | Page

6.1.34 COMMAND ACCESS CONTROL ROUTINE, UNLOCK 6-37

6.2 DATA BASE TRANSACTION COPY SUBROUTINE 6-38

6.2.1 DATA BASE TRANSACTION COPY, COPYTF 6-38

6.3 EXISTING PDP-11 AND IMAGE-100 SOFTWARE 6-40

6.3.1 FSTVID 6-40

6.3.2 IMAGE-100 I/O ROUTINES 6-41

7. DATA BASES AND SPECIAL FILES 7-1

7.1 FULL SCENE DATA BASE 7-2

7.2 SEARCH AREA DATA BASE 7-2

7.3 REFERENCE IMAGE DATA BASE 7-2

7.4 SCREENING MAP DATA BASE 7-2

7.5 PROCESS CONTROL AND STATUS DATA BASE 7-5

7.6 SYSTEM PARAMETER FILE 7-9

7.7 PROCESSOR COMMAND FILES 7-11

7.7.1 PC&S DATA BASE ADD PROGRAM COMMAND FILES 7-11

7.7.2 PC&S DATA BASE UPDATE PROGRAM COMMAND FILES 7-11

7.7.3 PC&S DATA BASE DELETE PROGRAM COMMAND FILES 7-11

7.7.4 GHIT PROCESSOR COMMAND FILES 7-12

7.7.5 EXTRACT PROCESSOR COMMAND FILES 7-12

7.7.6 CCT WRITE PROCESSOR COMMAND FILES 7-13

7.7.7 SCREENING & TRANSLATION PROCESSOR COMMAND FILES 7-13

Appendix

A. NASA NEW TECHNOLOGY REPORT A-1

B. OUTPUT CCT FORMAT B-2

Figures

Figure		Page
3.2-1	Overview of Computers and Disks in LIVES.	3-2
4.1-1	Organization of LIVES Software	4-2
4.2-1	Modules/Functions of LIVES	4-7
4.3-1	Area-of-Interest Description Record	4-11
4.3-2	Scene Description Record.	4-12
4.3-3	Acquisition Description Record.	4-13
5.1-1	Format of Cards to Add Area of Interest	5-5
5.1-2	Flow of AOIADD.BIS.	5-6
5.1.3	Flow of AOIADD Program.	5-10
5.1.4	Flow of WAITR1 Program.	5-14
5.2-1	Cards for Change of Area of Interest Description	5-16
5.2-2	Flow of AOIUPD.BIS.	5-20
5.2-3	Flow of AOIUPD Program.	5-22
5.2-4	Flow at WAITR2 Program.	5-25
5.3-1	Card for Deleting of Area of Interest Description	5-27
5.3-2	Flow of AOIDEL.BIS.	5-28
5.3-3	Flow of AOIDEL Program.	5-31
5.3-4	Flow of WAITR3 Program.	5-36
5.4-1	Flow of RPREAD.	5-39
5.4-2	Flow of MAINGN.	5-42
5.4-3	Flow of RPGEN2.	5-44
5.4-4	Flow of TMECTR.	5-46

Figures (Continued)

Figure		Page
5.5-1	Reference Image Load Processor.	5-49
5.6-1	Flow of GHIT.	5-54
5.6-2	Flow of GHIT.BIS.	5-65
5.6-3	Flow of WAITR4 Program.	5-69
5.6.4	Flow of PACK Program.	5-72
5.6.5	Flow of FLOPEN Program.	5-77
5.6.6	Flow of PACK1 Subroutine.	5-80
5.6.7	Flow of PACK2 Subroutine.	5-83
5.6.8	Flow of PACK3 Subroutine.	5-86
5.6.9	Flow of PACK4 Subroutine.	5-90
5.7.1	Flow of Extraction Processor.	5-96
5.8-1	Structure of Conditioning Processor	5-111
5.8-2	Flow of the Conditioning Processor.	5-116
5.8-3	Flow of AOIPRO.	5-121
5.9-1	Screening and Translation Processor	5-143
5.9-2	Messages for User Dialog.	5-144
5.9-3	Screening and Translation Module Main Program, STMMP	5-150
5.9-4	Display Window Parameters	5-152
5.9-5	Display Window Default Parameters	5-154
5.9-6	Exhibit and Change Window Parameters, DIWPA . . .	5-155
5.9-7	Prompt and Read	5-158

Figures (Continued)

Figure		Page
5.9-8	Read User ID Code (RUIDC)	5-160
5.9.9	Display Area and Accept or Reject, SCREEN	5-162
5.9-10	Select Next Area for Screening and Translation, SNAST	5-164
5.9-11	Screening or Translation Image Display	5-167
5.9-12	Display Control Points and Translate Image,	5-169
5.10-1	Program CCTGEN	5-177
5.10-2	Subroutine CCTREC	5-180
5.10-3	Subroutine WRTAPE	5-184
5.11-1	Flow of Archive Update Batch Run	5-188
5.12-1	Flow of Recovery Batch Run	5-191
5.12-2	Flow of RCVY1 Program	5-194
5.12-3	Flow of RCVY2 Program	5-196
5.12-4	Flow of RECRPT Subroutine	5-198
5.12-5	Flow of RCVY3 Program	5-200
5.13-1	Processing Tape Order Report	5-202
5.13-2	Preprocessing Activity Summary Report	5-204
5.13-3	Expected Area of Interested Summary Report	5-206
5.13-4	Extraction Processing Summary Report	5-208
5.13-5	Screening and Registration Processing Summary Report	5-210
5.15-1	Flow of OLIVES Program	5-220
7.2-1	Non-Image Data Record Format	7-3
7.2-2	Image Data Format	7-4
7.5-1	Area of Interest Description Recrod	7-6

Figures (Continued)

Figure		Page
7.5-2	Scene Description Record.	7-7
7.5-3	Acquisition Description Record.	7-8
7.6-1	System Parameter File Description	7-10

TABLES

Table		Page
5.6-1	Common Blocks of the GHIT Processor.	5-51
5.7-1	Common Blocks of the Extract Processor	5-93
5.9-1	Common Block /DWDA/	5-146
5.9-2	Common Block /MGDF/	5-146
5.9-3	Common Block /DB/	5-147
5.14-1	Common Blocks of EXTWOT	5-214

ORIGINAL PAGE IS
OF POOR QUALITY

GLOSSARY

ABBREVIATIONS, ACRONYMNS, AND DEFINITIONS

A of I Area of Interest (q.v.)

Acquisition - a given scene, consisting of imagery data for an area of interest taken on a given date. There are normally several acquisitions for each area of interest.

Archive PC&S Data Base - see Master (Archive) PC&S Data Base.

Area of Interest - a portion of a scene which has been specified by the data user. The area of interest size is a variable specified by a user. It can vary from a single pixel to any portion of a Landsat scene, or it may consist of the full scene. In LACIE this was called a sample segment and the size was restricted to 196 pixels by 117 lines. The acronym AI should not be used since it is preempted for Analyst-Interpreter; A of I may be used, but is not recommended. Area-of-Interest descriptions are maintained in the Master (Archive) Data Base.

ASATS Automatic Status and Tracking System.

bpi Bits per inch.

C&I Cataloging and Indexing.

CCT Computer-compatible tape.

CCT Generator Module - The LIVES computer program unit which actually produces the output tapes.

CDR Critical Design Review (also called Detailed Design Review.)

client a person that requests or obtains images from LIVES.

CPC Control Point Center.

Conditioning Processor - the LIVES computer program which distinguishes clouds, water, and other special pixels by use of the external SCREEN subroutine, and calculate biases and gains for non-cloud pixels.

Control points - a geographical point used in registration; its position must be precisely identifiable on an image to be registered and on the reference image to which it is to be registered.

CPU Central processing unit.

CRT Cathode ray tube.

ORIGINAL PAGE IS
OF POOR QUALITY

cycle of operation - all operations connected with a given GHIT. A cycle starts with operation of the GHIT Processor and normally ends with the final use of the CCT Processor, writing areas of interest to tape. The cycle is often conceived as daily since the GHIT is expected to reflect one day's production of high density tapes at Goddard; however, a cycle may be run in any period of time and in any relation to other cycles. Special precautions may be necessary if two cycles are interspersed.

daily This word normally refers to a cycle of operation (above). However, there are no time limitations on cycles of operation.

Daily PC&S Data Base - the ephemeral data base which is created at the beginning of a cycle of operation. It reflects all major operations performed in a cycle of operation. At the end of a cycle of operation it is used to update the Master (Archive) PC&S Data Base, and then it is discarded. In nomenclature, the "PC&S" portion of its name is normally omitted.

DAPTS Data Acquisition Preprocessing Transmission System.

DEC Digital Equipment Company of Maynard, Massachusetts, maker of the PDP-11 computers.

DMS Data Management System.

DRB Discipline Registration Band.

DRR Detailed Requirements Review.

DTL Data Techniques Laboratory, the EOD computer center in JSC Building 17, Room 2062.

EOD/JSC Earth Observations Division of NASA/JSC

EOD/LEC Earth Observations Department of LEC

ERIM Environmental Research Institute of Michigan at Ann Arbor.

ERIPS Earth Resources Interactive Processing System, the primary interactive system used for image analysis in the LACIE system.

Extraction Module - the LIVES computer program unit which extracts the areas of interest and search areas.

FDR Functional Design Review.

FRD Functional Requirements Document.

full scene - in LIVES, this term refers to a set of Landsat data which normally covers 185 km (cross-track) by 170 km (in-track); a full scene's radiation is spectrally separated into one, four or five bands depending on Landsat sensor and configuration at the time of data acquisition.

ORIGINAL PAGE IS
OF POOR QUALITY

Full Scene data base - the archive of Landsat scenes extracted from the high density tapes by the High Density Tape Reformatting System; resident on a non-portable 300 Mb disk.

GCP Ground control points; see control points.

GHIT Goddard High Density Tape (HDT) Inventory Tape.

GHIT Processor Module - the LIVES computer program unit which extracts information from the Goddard High Density Tape (HDT) Inventory Tape (GHIT).

GSFC The Goddard Space Flight Center of NASA, located at Greenbelt, Maryland in the Washington, D. C. area.

HDT High density tape.

HDTRS High Density Tape Reformatting System; the front end subsystem consisting of software and hardware to be delivered by the Ford Aerospace Corporation.

I-100 See Image-100.

ICD Interface Control Document.

ID Identification

Image-100 - Interactive imagery data analysis system manufactured by the General Electric Corporation; in LIVES, this term refers to the system in the DTL, consisting of an interactive terminal with CRT, color television monitor for display of images, and associated firmware and software, used in association with the Image Processor.

Image Processor - The PDP-11/45 computer and peripherals to which the Image-100 is connected. The DTL has both an Image and a Support Processor (q.v.).

IRS Implementation Requirements Specification.

JSC NASA's Lyndon B. Johnson Space Center in Houston, Texas.

LACIE Large Area Crop Inventory Experiment, the first large experiment on world-wide inventory of a crop from satellite data. LACIE was limited to the inventory of wheat.

LACIE segment - a segment (area of interest) of exactly 117 lines of 196 pixels each, used in the LACIE.

LEC Lockheed Electronics Company.

LIMS LIVES Information Management System, an elaboration of the RIMS.

LIMS Interface Module - a LIVES computer program unit that allows the LIMS data management system to be called as a normal FORTRAN subroutine.

LIVES Landsat Imagery Verification and Extraction System.

ORIGINAL PAGE IS
OF POOR QUALITY

Master (Archive) PC&S Data Base - the data base, maintained in disk, which maintains the long-term archive of LIVES. It is updated regularly from the Daily PC&S Data Base, and it can be modified by users (q.v.)of LIVES at will. Its primary contents are records of areas of interest. In nomenclature, often the "PC&S" portion of the name is omitted.

mB Megabyte.

MSS Multispectral Scanner, a Landsat sensor.

NASA National Aeronautics and Space Administration.

Operator - a person who operates the LIVES. Operators must have detailed expertise in computer science.

PC&S Process Control and Status.

PC&S Data Base - the information on areas of interest, etc., maintained on disk in two different forms; the Master (Archive) PC&S Data Base and the Daily PC&S Data Base (q.v.).

PC&S Update Generator - the LIVES computer program unit which updates the PC&S Data Base.

PDP Project Development Plan.

PDR Preliminary Design Review

RBV Return Beam Vidicon, a Landsat sensor.

RCP Registration Control Point - see Control Point.

reference images - standard images to which search images are to be registered.

Reference Image Data Base - the collection of reference images to be used in LIVES, maintained on disk.

Reference Image Load Processor - the LIVES computer program unit which loads reference images into the Reference Image Data Base.

Registration - remapping of an image so that it corresponds, pixel by pixel, with a reference image.

Report Generator Module - the LIVES computer program unit which provides the capability of generating a variety of reports.

RIMS Regional Information Management System, a data base management system developed for the Regional Applications Project and subsequently modified for generality. A version of RIMS, renamed LIMS, was enhanced for use in LIVES.

RMS Root Mean Square.

RSX-11 The operating system of the PDP-11/45 computer.

scene a set of imagery data of the earth. In LIVES, this term refers to Landsat imagery data, normally from the MSS, but conceivably from the RBV. The term sometimes refers to a full scene (q.v.).

SCREEN An external subroutine that was incorporated into the Conditioning Processor of LIVES. SCREEN, developed at ERIM, is described in Appendix A of ref. 2.2-9.

Screening and Translation Processor - the LIVES computer program unit which provides the user with the capability to examine search areas and areas of interest; the unit also provides the user with the capability to translate some areas, line by line and pixel by pixel, for rough registration with reference images.

Search Area - a portion of a scene which contains an area of interest plus a border large enough to assure the capability to search for and find the area of interest when registration confidence is low.

SCI-Serial Controller Interface - General Electric device to be used in the transfer of data from high density tapes to 300 MB disks; it is semiprogrammable and will allow images or portions of images to be extracted.

Support Processor - the PDP-11/45 computer and periphals in the DTL that are not directly used with the Image-100. The DTL has both a Support and an Image Processor (q.v.).

System Parameter File - a file containing parameters required to adapt LIVES to a given problem; for example, the sizes of areas of interest (segments) would be stored here for reference by all programs in LIVES.

TBD To be determined.

TBS To be supplied.

TP Test Plan.

Translation - the adjustment of an image in x and y directions only; a one-point registration; does not compensate for rotation or variation of scale in any direction.

UIC User identification code for the PDP-11/45 computer. An example would be [333,33].

UIF Universal Image Format.

user one of a very small number of persons, perhaps as few as three or four, that actually directs the operations of LIVES. A user will normally have an administrative function within LIVES, but will not need to have special expertise in computer science.

ORIGINAL PAGE IS OF POOR QUALITY

ORIGINAL PAGE IS POOR QUALITY

WRS World Reference System - a geographical parameter system in which Landsat scenes are described in terms of rows (roughly analogous to latitude) and paths (roughly analogous to longitude). Row numbers vary from 1, at 80° N. Lat., to 251 at the south pole. Path numbers vary from 1 at Greenwich through 250.

WRS Row Path Generator Processor - the LIVES computer program unit which computes the row and path of the Landsat scene corresponding to a geographical area described in longitude and latitude.

OF POOR QUALITY

1. SCOPE

1.1 SCOPE OF THIS DOCUMENT

This document presents the definitive description of the Landsat Imagery and Verification System (LIVES) as it was built and delivered.

In general terms, this document follows the guidelines presented in reference 2.1-1 as interpreted by reference 2.1-2 when feasible. Sufficient additional details are presented to meet minimum requirements put forth in reference 2.1-3, the basic federal document on documentation of computer systems (FIPS-38). The format of this document follows the format of reference 2.2-9 and can be considered the definitive amplification of it.

1.2 BACKGROUND OF LIVES

Throughout the Large Area Crop Inventory Experiment (LACIE), the NASA facilities at Goddard Space Flight Center (GSFC) preprocessed all Landsat scenes containing areas of interest to that program. GSFC extracted segments of interest, registered the segments to reference images, and forwarded the final segment data to LACIE on tape in standard (universal) image format.

GSFC will change their method of operation in late 1979. Landsat images will be preprocessed and registered as full scenes. Imagery data will be forwarded to users as full scenes on high density tapes (HDT's). User agencies will be expected to extract the data as needed; the Goddard facilities will no longer extract subsets of the full-scene imagery. LIVES provides the capability of extracting areas of interest from these high density tapes.

1.3 ENVIRONMENT AND USE OF LIVES

In general terms, persons who need images will furnish information on Landsat scenes needed by the Earth Observations Division at NASA's Johnson Space Center. This information will be used to order scenes from the Image Processing Facility of Goddard Space Flight Center. That facility will furnish the needed scenes, and perhaps others, on high density tapes. At the same time it will furnish an inventory tape (the Goddard High Density Tape Inventory Tape, GHIT) with information on all scenes furnished on these tapes.

The high density tapes will be processed by the High Density Tape Reformatting System (HDTRS) currently being developed by the Ford Aerospace and Communications Corporation. The HDTRS will transfer full Landsat scenes to 30 megabyte disks. LIVES then extracts areas of interest from them. Ultimately, LIVES produces Computer Compatible Tapes (CCT's) containing areas of interest for specific users.

2. APPLICABLE DOCUMENTS

This section presents a list of all major references for this project. They are presented under the following headings:

SPECIFICATIONS FOR DOCUMENTS (2.1)
PROGRAMMED DOCUMENTATION OF LIVES (2.2)
DOCUMENTATION OF THE HIGH DENSITY TAPE REFORMATTING SYSTEM (HDTRS) (2.3)
DOCUMENTATION OF EXTERNAL SYSTEMS (2.4)
INFORMATION ON MAJOR SOFTWARE COMPONENTS (2.5)
INFORMATION ON MAJOR HARDWARE ITEMS (2.6)

All documents with JSC Identification numbers are available through the NASA JSC Technical Library (code JM6, Building 45). All documents with LEC numbers are available through the Lockheed Library (code BO9, Building Lockheed-10 in Nassau Bay, Texas). Most of the same documents are immediately available from the Data Techniques Library of the Earth Observations Division (Building 17, Room 2062, JSC).

2.1 SPECIFICATIONS FOR DOCUMENTS

2.1-1 Building 17 Facilities Configuration Management Plan A, JSC-10105 (September 1977); with change 2 (August 1978).

2.1-2 INTEGRATED STANDARDIZATION, OPERATION, AND QUALITY ASSURANCE PLAN FOR SOFTWARE DEVELOPMENT SECTION 626-45, LEC-9972 (January 1977).

2.1-3 GUIDELINES FOR DOCUMENTATION OF COMPUTER PROGRAM, Guidelines for Documentation of Computer Programs and Automated Data Systems, Federal Information Processing Standards FIPS PUB 38, U. S. Department of Commerce, National Bureau of Standards (February 1976).

2.2 PROGRAMMED DOCUMENTATION OF LIVES

The following documents are specified in reference 2.1-1 (above) and, in some cases, clarified in reference 2.2-2.

2.2-1 Job Orders 71-485 and 71-523, High Density Tape Implementation.

2.2-2 Functional Requirements Document (FR) (informal document only), August 1978.

2.2-3 Implementation Requirements Specification (IRS), JSC-14647, LEC-12862, November 1978.

2.2-4 Preliminary Functional Design Document (FD) (informal document only), August 1978.

2.2-5 Project Development Plan (PDP), JSC-14579, LEC-12856, October 1978.

2.2-6 Preliminary Design Specification (FS: Functional Specifications), JSC-14577, LEC-12838, November 1978.

2.2-7 Test Specification (DTS), JSC-14635, LEC-12900, April 1979.

2.2-8 Test Plan (TP), JSC-14578, LEC-12857, October 1978.

2.2-9 Detailed Design Specification (DDS), JSC-14611, LEC-12901, January 1979.

2.2-10 Facility Preparation Plan, LEC-13069, January 1979.

2.2-11 Test Preparation Sheet, --- XXX

2.2-12 Users Manual, JSC-14632, LEC-12902, April 1979.

2.2-13 Operations Manual, JSC-14633, LEC-12903, April 1979.

2.2-14 "As Built" Design Specification, JSC-14634, LEC-12904, this document.

2.3 DOCUMENTATION OF THE HIGH DENSITY TAPE REFORMATTING SYSTEM (HDTRS)

2.3-1 Landsat HDT Reformatting System (HDTRS), Ford Aerospace and Communications Corporation, July 1978.

2.3-2 Landsat HDT Reformatting System, Interface Control Document, Ford Aerospace and Communications Corporation, August 1978.

2.3-3 HDTRS Users Manual (may not be exact title) (to be prepared by Ford Aerospace and Communications manual).

2.3-4 HDTRS Operations Manual (may not be exact title) (to be prepared by Ford Aerospace and Communications manual).

2.4 DOCUMENTATION OF EXTERNAL SYSTEMS

2.4-1 Goddard HDT Inventory Tape (GHIT) Operations Research, Inc. NAS 5-23762, February 1978.

2.5 INFORMATION ON MAJOR SOFTWARE COMPONENTS

2.5-1 RIMS Design Specification, LEC-9564, February 1976

2.5-2 Detail Design Specification for Enhancement of the Automatic Status and Tracking System Software, JSC-13789, LEC-11512, November 1977.

2.5-3 RIMS Users Guide, LEC-9301, Revision A, April 1977.

2.5-4 Addendum to RIMS Users Guide, LEC-11756, January 1978.

2.5-5 IBM User's Guide, LACIE, section 10.4.1.1 through 10.4.1.6, April 1975 (variously revised).

2.5-6 Software Description Volume of the IMAGE 100 User Manual, G. E. Space Division (Daytona Beach, Florida), June 1975.

2.5-7 LIVES Information Management System (LIMS) Users Guide (to be prepared)

2.5-8 JSC Image-100 Users Guide, JSC-12586, LEC-10262, June 1977.

2.6 INFORMATION ON MAJOR EQUIPMENT

2.6-1 High-Density Digital Tape Recorder, Martin-Marietta Corporation, P75-48236-2, June 1975.

2.6-2 Serial Controller Interface - Input (SCII), Interface Control Document and Test Software Requirements, General Electric Company, February 1978.

2.6-3 Serial Controller Interface - Input (SCII), Product Specification, General Electric Company, February 1978.

3. DESCRIPTION OF HARDWARE

3.1 OVERVIEW

LIVES was built on the physical facilities of the Data Techniques Laboratory, room 2062 of Building 17, at NASA's Johnson Space Center (JSC). It uses only equipment in that laboratory, and makes use of image display facilities of its Image-100 system. The HDTRS, developed by the Ford Aerospace and Communications Corporation and physically located in the same area, is used concurrently with LIVES.

3.2 COMPUTERS

Figure 3.2-1 shows the computers, disks and terminals of the HDTRS and of LIVES. There are three general purpose computers: a PDP 11/20 for the HDTRS, the Support Processor (PDP 11/45), and the Image Processor (PDP 11/45) for LIVES. HDTRS operates in the PDP 11/20, placing full scene data on disk accessible to the Support Processor.

LIVES resides on the Support Processor and the Image Processor. The Extract Processor is implemented only on the Support Processor in order to access HDT data placed on disk by the High Density Tape Reformatting System. The display and translation functions are on the Image Processor because they both require the Image-100 terminal. All other functions are normally performed on the Support Processor but could be performed on the Image Processor equally as well.

3.3 DISKS

Figure 3.2-1 also presents the configuration of disks in the system. The two 300 MB disks are dual-ported, controlled by software, so that one is used by the HDTRS while the other is in use by LIVES; the two are not used by both systems at the same time.

The other disks in the system are all 88 MB. In theory, all are portable; but, in practice, the one marked "switchable" will not have a portable function.

ORIGINAL PAGE IS
OF POOR QUALITY

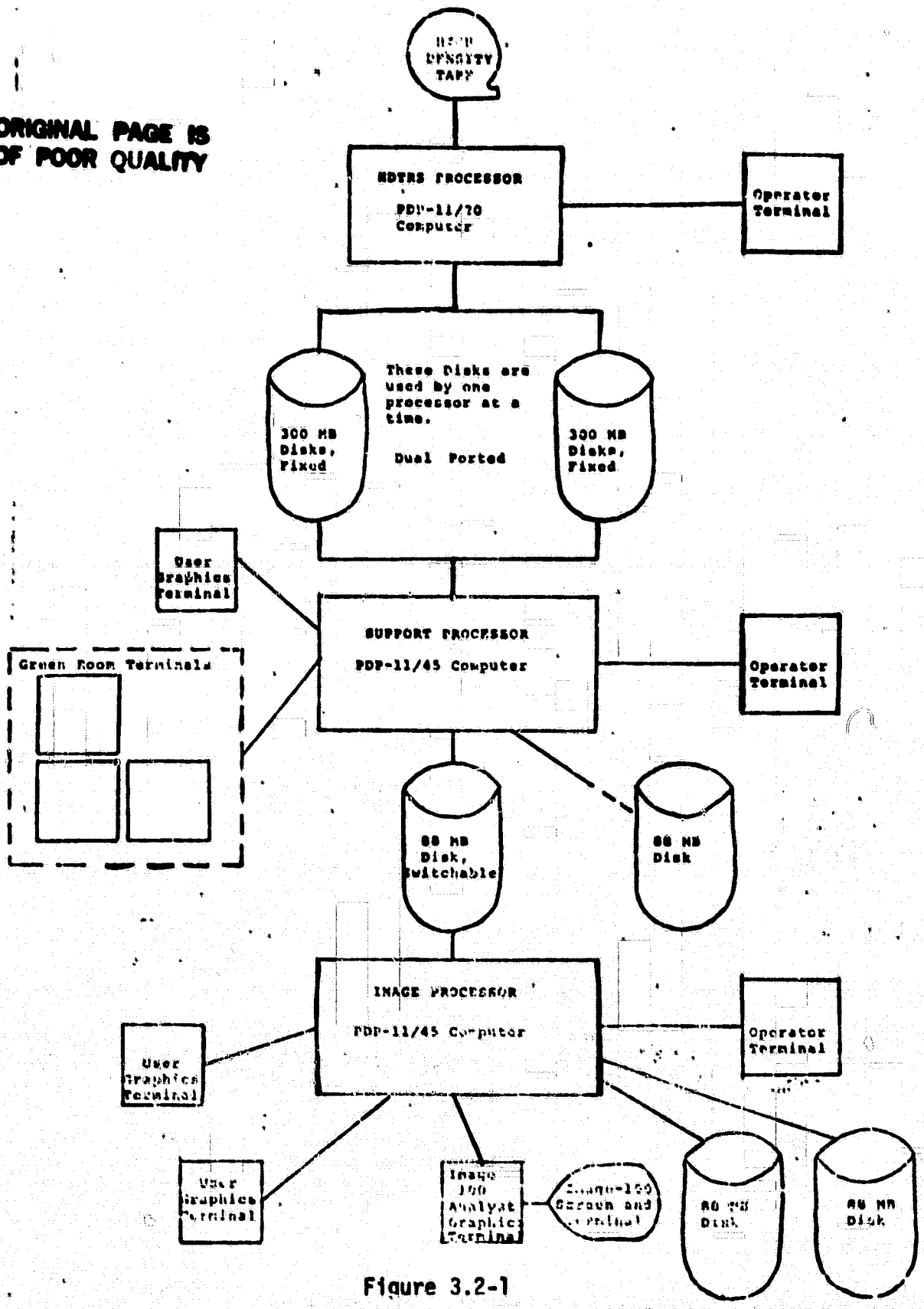

Figure 3.2-1

Overview of Computers and Disks in LIVES

3.4 HIGH DENSITY TAPES

"Fully processed" high density tapes will have been preprocessed and registered. This version of LIVES is designed to use "fully processed" tapes since it does not incorporate a registration capability other than line-by-line and pixel-by-pixel translation.

4. OVERVIEW OF SOFTWARE

4.1 SYSTEM OVERVIEW

LIVES and the HDT Reformatting System (HDTRS) comprise the HDT processing system which has been implemented in the Data Techniques Laboratory (DTL) in Building 17 of NASA's Johnson Space Center. This system reads high density Landsat tapes and produces computer compatible tapes (CCT's).

Figure 4.1-1 illustrates organization of LIVES software. This diagram shows the total flow of data within LIVES and between LIVES and other systems. Initially, users identify areas of interest. On the basis of this information, notice will probably be sent to Goddard of the Landsat scenes that would be of interest. Goddard prepares high density tapes (HDT's) and inventory tapes (GHIT's) on a daily basis and sends them to the Earth Observations Division of NASA's Johnson Space Center. The HDTRS is used to reformat the data from the high density tapes and place them on the Full Scene Data Base. From these full scenes, LIVES extracts areas of interest; computes cloud cover, gains and biases; optionally provides the capability to screen and translate; and, ultimately, writes the imagery data (areas of interest) to CCT's.

The major input to LIVES is imagery data which have been placed on disk by the HDTRS. Other input includes areas of interest descriptions and the Goddard HDT Inventory Tapes (GHIT's); the latter define the information on a set of high density tapes.

The principal output is computer compatible tapes which contain imagery for areas of interest. Other output includes operations and management reports concerning system utilization and processing.

The status of LIVES is maintained in the Process Control and Status (PC&S) Data Base. This data base defines the various areas of interest for which Landsat data is needed by the users. It also contains information required for computations in the various system

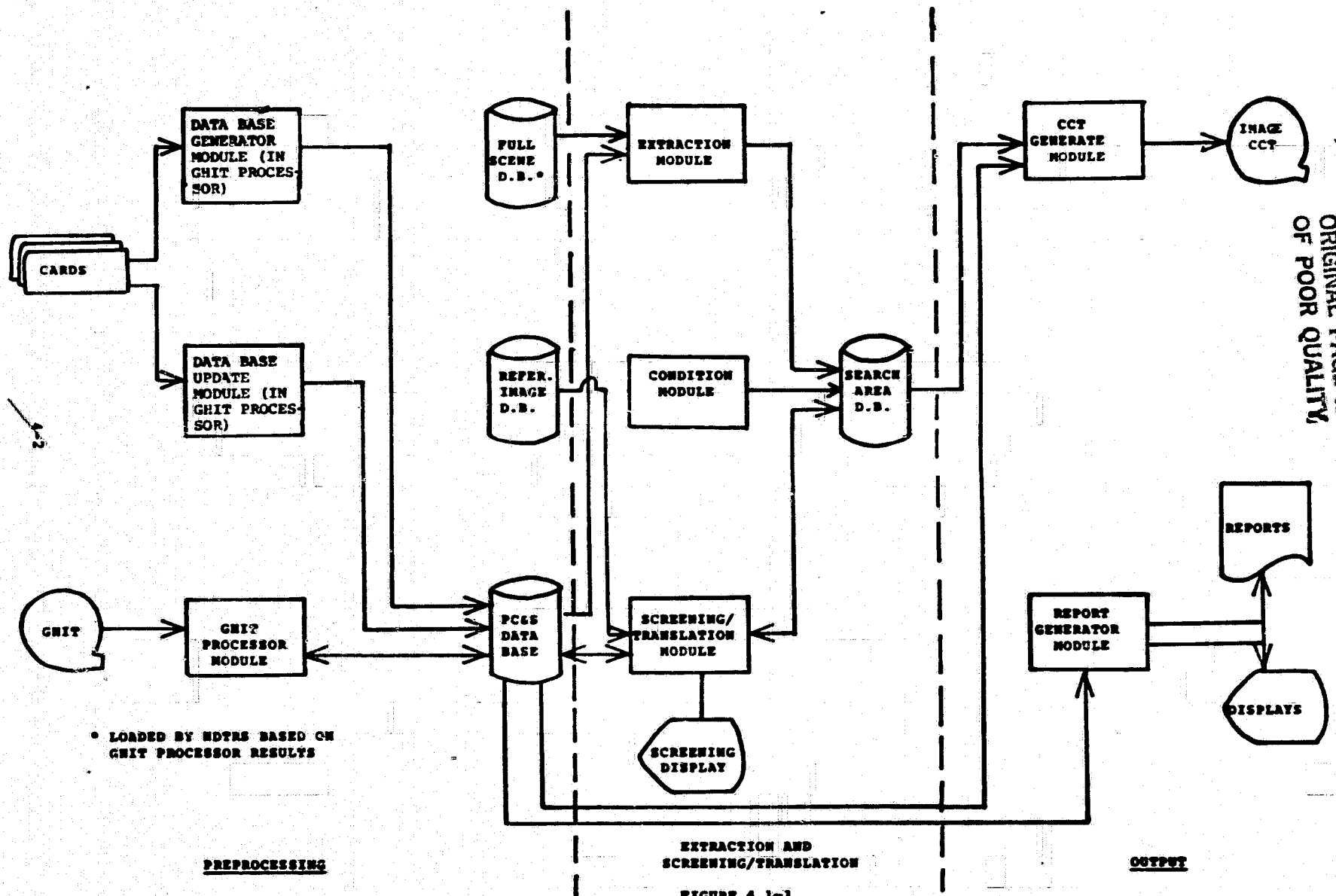

FIGURE 4.1-1
ORGANIZATION OF LIVES SOFTWARE

ORIGINAL PAGE IS OF POOR QUALITY

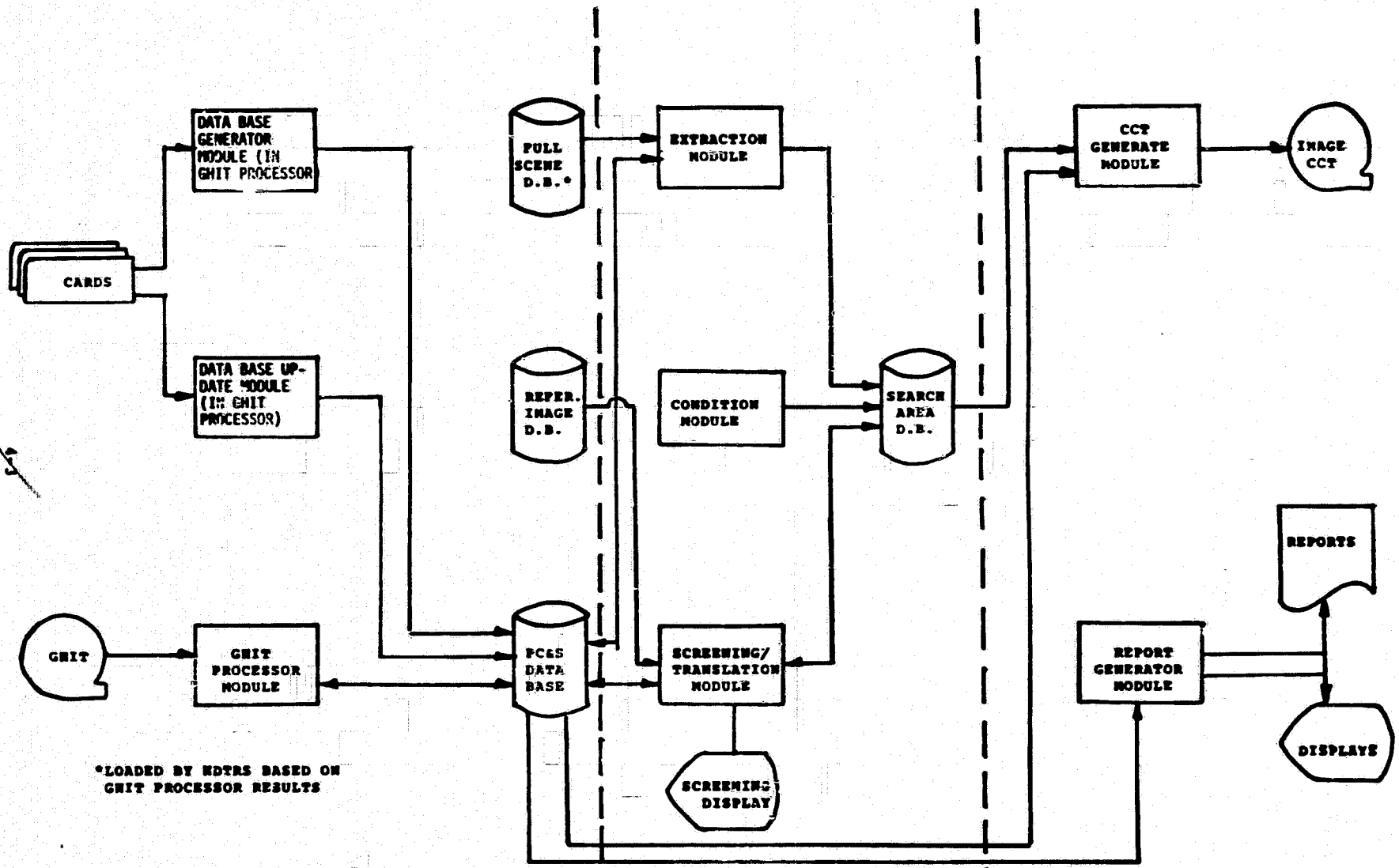

FIGURE 4.1-1
ORGANIZATION OF LIVES SOFTWARE

ORIGINAL PAGE IS OF POOR QUALITY

processes, other control information, and status information. Area-of-interest descriptions must be defined and constructed before an area of interest can be extracted. The generalized data management system, LIVES Information Management System LIMS, is used for generating and updating area-of-interest descriptions in the PC&S Data Base. (LIMS is nearly identical to RIMS, and contains only minor enhancements to that previously existing system (ref. 2.5-1 through 2.5-4).

A day's processing starts with execution of the GHIT processor, which compares the GHIT with the data base to determine which high density tapes require processing. The GHIT processor also updates the PC&S data base with information to be used in other system processes.

Then, the Extraction Processor is executed on the PDP 11/45. Concurrent with the execution of the extract program, the HDTRS is put into operation. It performs its primary task by reading full scene data from the HDT's to disk. By extracting pertinent data from the full scenes, the Extraction Processor builds the Search Area Data Base, which includes all data for areas of interest. A search area includes all data within the area of interest plus additional data to allow for translation, which is a form of registration. This search area is then moved to another disk, freeing the full scene disk so that the reformatting system may continue to read additional full-scene data from the high density tapes.

After extraction, the conditioning processor is initiated. This function analyzes the amount of cloud cover, and calculates bias and gains.

After conditioning, the screening and translation function may be performed on the Image-100 terminal. Screening is required for images that fail a user-supplied registration threshold quality. Screening options include the ability to reject the data from further processing, accept the data for CCT as is, and perform

translation in a plane. Translation is accomplished by a user who can see both the image and a control image on a screen. Points which correspond on each image are identified by positioning a cursor. The image is then translated to the control image based on the difference in the marked positions. After screening and translation, the Conditioning Processor is again initiated to calculate bias and gains for any images which have been translated.

Upon completion of the Conditioning Processor, the CCT Generate Processor is activated to write area-of-interest data to tape. The program provides the capability to produce tapes according to the needs of a given user.

All reports in the system are made with LIMS. Some are pre-programmed and formatted; other report information can be obtained via the "ad hoc" capability of LIMS. The LIMS system allows rapid response in meeting new or changing report requirements.

4.2 PROGRAMS IN LIVES

LIVES consists of a series of independent programs with the functions shown in the top portion of Figure 4.2-1. Programs called by the independent programs are listed at the bottom of the same figure for general information of the operator. Most of these are transparent to a person using or operating LIVES.

An operator may use the Reference Image Load Processor (section 5.5 of this document) from any terminal with access to the Reference Image Data Base. He will normally use the GHIT Processor (5.6) from the Support Processor. The Extract Processor (5.7) must be run from the Support Processor. The Conditioning Processor (5.8) will be used on either processor, as most convenient. He will use the Screening and Translation Processor from the Image-100 console (5.9). He can generate CCT's with the CCT Processor (5.10) from either processor.

The operator may use the data base management system, LIMS (7.) from any terminal with access to the Daily Data Base or the Master (Archive) Data Base. He can generate reports from a terminal connected to the appropriate data base (section 6.3.3). Possible operations include adding, modifying (updating), and deleting area-of-interest definitions (5.1-5.3); preparing reports (5.13); saving and restoring the Master (Archive) Data Base (7.5); and others (5.12).

Users, on the other hand, will normally need to know details only for use of the Reference Image Load Processor, the Screening and Translation Processor, and certain data base operations. Their knowledge of the remainder of LIVES will normally need to be only general. (Users will normally need use only of reference 2.2-12.)

INDEPENDENT MODULES

Program	Purpose	Normally Operated By	Frequency of Use *
Reference Image Load Processor	Load reference image	Computer Operator	Frequently at first, then infrequently
GHIT Processor	Interpret GHIT	Computer Operator	Daily
Extraction Processor	Extract image from full scene data base	Computer Operator	Daily
Conditioning Processor	Calculate gains and biases, and analyze for cloud cover	Computer Operator	Daily
Screen and Translate Processor	Screen and Translate	User	Frequent
CCT Generate Processor	Write CCT	Computer Operator	Daily
LIMS	Data Base Management	User	Daily

DEPENDENT FUNCTIONS

Function	Uses, or Used By
Create data bases	LIMS
Update data bases	LIMS
Delete data bases	LIMS
Find row and path in World Reference System	LIMS
Generate Reports	LIMS
Archive the data from a day's activity	LIMS
Recover from computer failure	All Processors except LIMS
LIMS interface	LIMS
Data Base Transaction Copy	All Processors

Figure 4.2-1

Modules/Functions of LIVES

4.3 DATA BASES

In general, LIVES consists of separate programs which communicate only by reading and writing mutual files and data bases.

The function and content of the data bases and the major files are presented below in the following order:

Full Scene Data Base	(4.3.1)
Search Area Data Base	(4.3.2)
Reference Image Data Base	(4.3.3)
Screening Map Data Base	(4.3.4)
Process Control and Status Data Base	(4.3.5)

4.3.1 FULL SCENE DATA BASE

Full scenes are the original Landsat images on the high density tapes from the Goddard facility; in content, these are complete Landsat scenes such as might be ordered from the EROS Data Center in Sioux Falls, South Dakota. However, their format is quite different from scenes furnished by EROS.

The High Density Tape Reformatting System (HDTRS) extracts images from high density tapes and loads them into this data base. The Extraction Processor of LIVES removes portions of certain images and places them on the Search Area Data Base. The HDTRS and the Extraction Processor work simultaneously but on separate disks (they use the 300 megabyte fixed disks in LIVES).

The Full Scene Data Base file access conventions are described in reference 2.3-2.

4.3.2 SEARCH AREA DATA BASE

Imagery data extracted from the Full Scene Data Base are placed here. They consist of multichannel areas of interest or corresponding search areas, the former for high-quality images that do not need to be screened, and the latter for images that will need to be processed with the Screening and Translation Processor.

These images are maintained in two types of files, imagery files and non-image files; the latter contain header and annotation date.

The Search Area Data Base file names will consist of the User ID concatenated with the Area of Interest ID. The file types will be SAI for imagery data and SAN for non-imagery data.

4.3.3 REFERENCE IMAGE DATA BASE

This data base includes single channel images to which search areas can be registered. Images are loaded with the Reference Image Load Processor; they can be deleted using standard PDP commands.

The Reference Image Data Base file names will consist of the User ID concatenated with the Area of Interest ID. The file type will be RIP and RIS for primary and secondary imagery scene data.

4.3.4 SCREENING MAP DATA BASE

The conditioning processor produces class maps with the following classes: agricultural land, cloud shadow, snow, garbled clouds, water. Maps are produced for the entire area of interest. These maps are single-channel images. Screening map file names are composed in the same manner as the search area data base file names. The file types will be SCM.

4.3.5 PROCESS CONTROL AND STATUS (PC&S) DATA BASE

All transactions in LIVES are noted in transactions files, which are combined into a Daily PC&S Data Base, which is incorporated daily into the Master (or Archive) PC&S Data Base. (In this sense "daily" refers to a cycle of operation of LIVES, which may not correspond to any given day.) These transactions have the following functions: (1) they define areas of interest, (2) they support system computations, (3) they support system control, and (4) they provide system statusing information. The contents of the PC&S data base is derived from area of interest definition and GHIT tapes, as well as the various processors.

There are three types of records in the PC&S data base:

- Area of Interest Descriptions - Define those items of an area of interest common to all image acquisitions (see figure 4.3.5-1).
- Scene Descriptions - Describe scenes from the HDT (see figure 4.3.5-2).
- Acquisition Descriptions - Contain data describing area-of-interest acquisitions and the processing of these acquisitions (see figure 4.3.5-3).

The Daily PC&S Data Base contains only those acquisition descriptions and their associated area of interest descriptions and scene descriptions from a given cycle of operation. It is used to report on the status of a given day's activity. The use of this small data base for frequent processing minimizes the system overhead for data management activities.

The Master PC&S Data Base, also called the Archive PC&S Data Base, contains area-of-interest descriptions and scene descriptions from all cycles of processing with LIVES. This data base is used for weekly, monthly, and other periodic and aperiodic reporting, as well as for maintaining area-of-interest descriptions.

FIELD NO.	FIELD NAME		INTERNAL START CHAR.	LENGTH	TYPE	KEY
1	RCTYPE	RECORD TYPE - ALWAYS A 1	9	1	I	Y
2	USERID	USER ID - RANGE 1-20	10	2	I	
3	AOIID	AREA OF INTEREST ID - RANGE 1-9999	12	4	I	
4	AILNES	NUMBER OF LINES	16	5	I	
5	AIPXLS	NUMBER OF PIXELS	21	5	I	
6	REGQTS	REGISTRATION QUALITY THRESHOLD - SCREEN	26	1	I	
7	REGQTR	REGISTRATION QUALITY THRESHOLD - REJECT	27	1	I	
8	CLDPTH	CLOUD PERCENT THRESHOLD	28	2	I	
9	COUNTR	COUNTRY	30	6	A	
10	REG	REGION	36	2	A	
11	ZONE	ZONE	38	4	A	
12	STR	STRATA	42	4	A	
13	PC	PRIORITY CODE	46	2	A	
14	TY	AREA OF INTEREST TYPE	48	1	A	
15	CRPCOD	CROP CODE	49	2	A	
16	AILAT	LATITUDE/DIRECTION - FORMAT NDDD/MM	51	7	A	
17	AILONG	LONGITUDE/DIRECTION - FORMAT EDDD/MM	58	7	A	
18	ACQSRT	ACQUISITION START DATE - FORMAT YDDD	65	4	D	
19	ACQSTP	ACQUISITION STOP DATE - FORMAT YDDD	68	4	D	
20	PWRSRP	PRIMARY WRS ROW AND PATH	73	6	I	Y
21	SWRSRP	SECONDARY WRS ROW & PATH	79	6	I	Y
22	FLMFLG	FILM FLAG	85	1	A	
23	BNREQE	BAND NUMBERS REQUIRED FOR EXTRACTION	86	4	A	
24	CLRCDS	COLOR CODES	90	4	A	
25	LSTUPD	LAST UPDATE DATE & TIME - FORMAT YDDDHHMM	94	8	A	
				93		

RECORD ID = USERID @ AOIID @ O

FIGURE 4.3-1
AREA-OF-INTEREST DESCRIPTION RECORD

FIELD NO.	FIELD NAME	FIELD DESCRIPTION	INTERNAL START CHAR.	LENGTH	TYPE	KEY
1	RCTYPE	RECORD TYPE - ALWAYS A 2	9	1	I	Y
2	SCENNO	SCENE NUMBER - RANGE 1-9999	10	4	I	
3	ACQDAT	ACQUISITION DATE - FORMAT YDDD	14	4	D	
4	HDTID	HDT TAPE ID	18	20	A	
5	IMGID	IMAGE ID	38	12	A	
6	NOENDS	NUMBER OF BANDS ON TAPE	50	1	I	
7	SCNCLA	SCENE CLOUD ASSESSMENT	51	2	A	
8	REGPFL	REGENERATED PRODUCT FLAG	53	1	A	
9	WRSDES	WRS DESIGNATOR	54	6	I	
10	WRSOFF	WRS OFFSET	60	6	I	
11	MISSNO	MISSION NUMBER	66	1	I	
12	RESTYP	RESAMPLING TYPE	67	1	A	
13	QAGEOM	QUALITY ASSESSMENT OF GEOGRAPHICAL MODEL	68	1	I	
14	FMTLAT	FORMAT CENTER LATITUDE/DIRECTION	69	7	A	
15	FMTLON	FORMAT CENTER LONGITUDE/DIRECTION	76	7	A	
16	PLYBDR	PLAYBACK/DIRECT FLAG	83	1	A	
17	ASCDES	ASCENDING/DESCENDING FLAG	84	1	A	
18	SUNELA	SUN ELEVATION ANGLE	85	2	I	
19	SUNAZA	SUN AZIMUTH ANGLE	87	3	I	
20	DATGHI	DATE GHIT RUN	90	4	D	
21	HDTPDT	HDT PROCESSED DATE	94	4	D	
22	IRIGB	IRIG BEGIN TIME	98	10	A	
23	IRIGE	IRIG END TIME	108	10	A	
				109		

RECORD ID = O @ SCENNO @ ACQDAT

FIGURE 4.3-2
SCENE DESCRIPTION RECORD

FIELD NO.	FIELD NAME	FIELD DESCRIPTION	INTERNAL START CHAR.	LENGTH	TYPE	KEY
1	RCTYPE	RECORD TYPE - ALWAYS A 3	9	1	I	Y
2	USERID	USER ID - RANGE 1-20	10	2	I	Y
3	AOIID	AREA OF INTEREST ID - RANGE 1-9999	12	4	I	
4	ACQDAT	ACQUISITION DATE - FORMAT YDDD	16	4	D	
5	HDTID	HDT TAPE ID	20	20	A	
6	IMGID	IMAGE ID	40	12	A	
7	NOBNDS	NUMBER OF BANDS ON TAPE	52	1	I	
8	DATGHI	DATE GHIT RUN - FORMAT YDDD	53	4	D	
9	PREJRS	PREPROCESSING REJECT REASON	57	1	A	
10	SCRREG	SCREENING AND REGISTRATION	58	1	A	
11	SACLDA	SEARCH AREA CLOUD ASSESSMENT	59	1	A	
12	EXTRRC	EXTRACTION REJECT REASON CODE	60	1	A	
13	SRGDAT	SCREEN AND REGISTER DATE	61	4	D	
14	SRJCOD	SCREEN REJECT CODE	65	1	A	
15	CCTDAT	CCT DATE - FORMAT YDDD	66	4	D	
16	CCTNO	CCT NUMBER	70	9	A	
17	SCENNO	SCENE NUMBER - RANGE 1-9999	79	4	I	
18	BNDSEX	BAND NUMBERS EXTRACTED	83	4	A	
19	NPT	NUMBER OF PIXELS TRANSLATED	87	3	I	
20	NLT	NUMBER OF LINES TRANSLATED	90	3	I	
21	BIASFC	BIAS FACTORS	93	20	A	
22	GAINFC	GAIN FACTORS	113	20	A	
23	PCNTCC	PERCENT CLOUD COVER	133	2	I	
24	PRMSCN	PRIMARY/SECONDARY FLAG	135	1	I	
25	FLLNES	NUMBER OF FILL LINES	136	5	I	
26	FLPXLS	NUMBER OF FILL PIXELS	141	5	I	
				137		

RECORD ID = USERID @ AOIID @ ACQDAT

FIGURE 4.3-3
ACQUISITION DESCRIPTION RECORD

5. INDEPENDENT PROGRAMS

This section contains the independent modules of LIVES. They are presented in the following order, which is roughly comparable to their order of use.

Add Area-of-Interest Definitions	(5.1)
Modify (Update) Area-of-Interest Definitions	(5.2)
Delete Area-of-Interest Definitions	(5.3)
World Reference System	(5.4)
Reference Image Load Processor	(5.5)
GHIT Processor	(5.6)
Extract Processor	(5.7)
Conditioning Processor	(5.8)
Screening and Translation Processor	(5.9)
CCT Generator Processor	(5.10)
Archive Update Program	(5.11)
Data Base Recovery	(5.12)
Reports	(5.13)
Direct Extraction Processor	(5.14)

The above section numbers identify the set of program units associated with each function. Each individual unit is described in detail, under the following headings:

- input
- output
- description
- flow
- subroutines called
- errors and diagnostics

When material is not applicable, or missing, or easily available from compilation listings, it may be omitted here.

For each unit, a compilation listing is presented in volume 2; these listings contain many additional data of value to a programmer.

In general, program units are presented in order of hierarchy or in order of use, or alphabetically. For example, since the batch run stream AOIADD.BIS calls all other units in section 5.1, it is presented first. To facilitate locations of program units, an alphabetical index is presented at the end of this document.

5.1 ADD AREA-OF-INTEREST DEFINITIONS, AOIADD

This batch program adds area-of-interest definitions to the Master (Archive) Data Base.

5.1.1 BATCH RUN STREAM, AOIADD.BIS

o Input

Cards are normally furnished by a user to an operator. The format of the cards is shown in figure 5.1-1.

In a given deck, for each area of interest to be added there must be one "Add Area of Interest Transaction Card" followed by a pair of "Area of Interest (Site) cards." For example, a sample deck might be as follows:

Add Area of Interest Transaction card (for first area of interest
First Area of Interest (Site) card (for first area of interest)
Continuation Area of Interest (Site) card (for second are of interest).

An additional input is the World Reference System Row-Path Tables tape.

o Output

The only output consists of the newly-added definitions in the data base.

o Description

This program consists of a batch run stream, AOIADD.BIS (5.1.1), which calls the following modules:

AOIADD program	(5.1.2)
WAITR1 program	(5.1.3)
LIMS data base management system	(described in section 6.1)
RPREAD program	(described in seciton 5.4)

o Flow

The flow of this processor can be seen in the flowchart of the batch run stream, fig. 5.1-2.

o Subroutines called

See description above.

o Errors and Diagnostics

1) The input card contains data which is incompatible with the format type.
2) The input card contains an invalid area of interest ID.
3) The input card sequence is incorrect or the card identifier is missing or incorrect.
4) The input card has an invalid user ID.
5) Data from input record was not added (status =).

ORIGINAL PAGE IS OF POOR QUALITY

ADD AREA OF INTEREST TRANSACTION CARD

Column	Format	Contents
2	'A'	Card Identifier Field - Must be an 'A'.
4-19	AA...AA	Country name. Only leftmost six characters will be carried by LIVES.
21-24	DDDD	Region. Only rightmost two digits will be carried by LIVES.
26-29	DDDD	Zone.
31-34	DDDD	Strata.
51-52	DD	User ID. An identification number associated with a particular user project. The number can range from 1 through 19 and must be right-justified and blank-filled.
54-61	DD...DD	Reserved for use by LIVES. The current date and time will be placed here in the input card images on disk in a YDDDHHMM format.

First Area of Interest (Site) Card

2	'2'	Card Identifier Field - Must be a '2'.
4-7	DDDD	Site on Area of Interest ID. Number may range from 0001 through 9999.
9	D	Segment Type.
11	A	Crop Type.
13-19	AAAAAAA	Area of Interest Center Point Latitude. Format is XDDD/MM where S is an 'N' for North or an 'S' for South, DDD must be degrees from 000 through 090, and MM must be minutes from 00 through 59.
21-27	AAAAAAA	Area of Interest Center Point Longitude. Format is XDDD/MM where X is an 'E' for East or a 'N' for West, DDD must be degrees from 000 through 180, and MM must be minutes from 00 through 59.
29	D	Film Processing Flag.
31-34	DDDD	Color Codes Field.

Second Area of Interest (Site) Card

2	'3'	Card Identifier Field - Must be a '3'.
4-7	DDDD	Site or Area of Interest ID - same number as on the '2' card.
10-13	DDDD	Acquisition Start Date in YDDD format, where Y is the last digit of the year, and DDD is the Julian day of the year.
52-55	DDDD	Acquisition Stop Date in YDDD format.

Figure 5.1-1

Format of Cards to Add Areas of Interest

ORIGINAL PAGE IS
OF POOR QUALITY

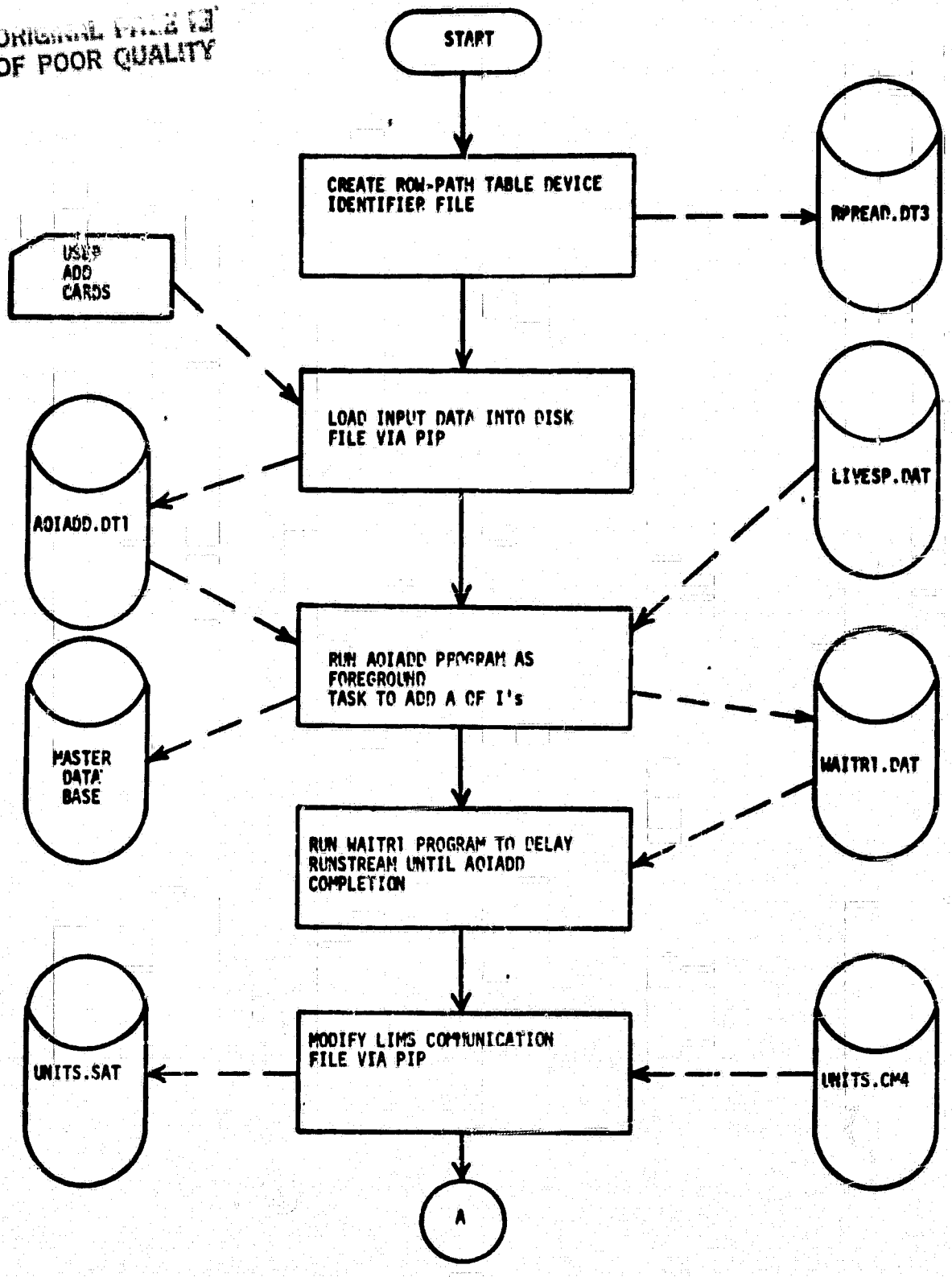

Figure 5.1-2
FLOW of AOIADD.BIS

ORIGINAL PAGE IS
OF POOR QUALITY

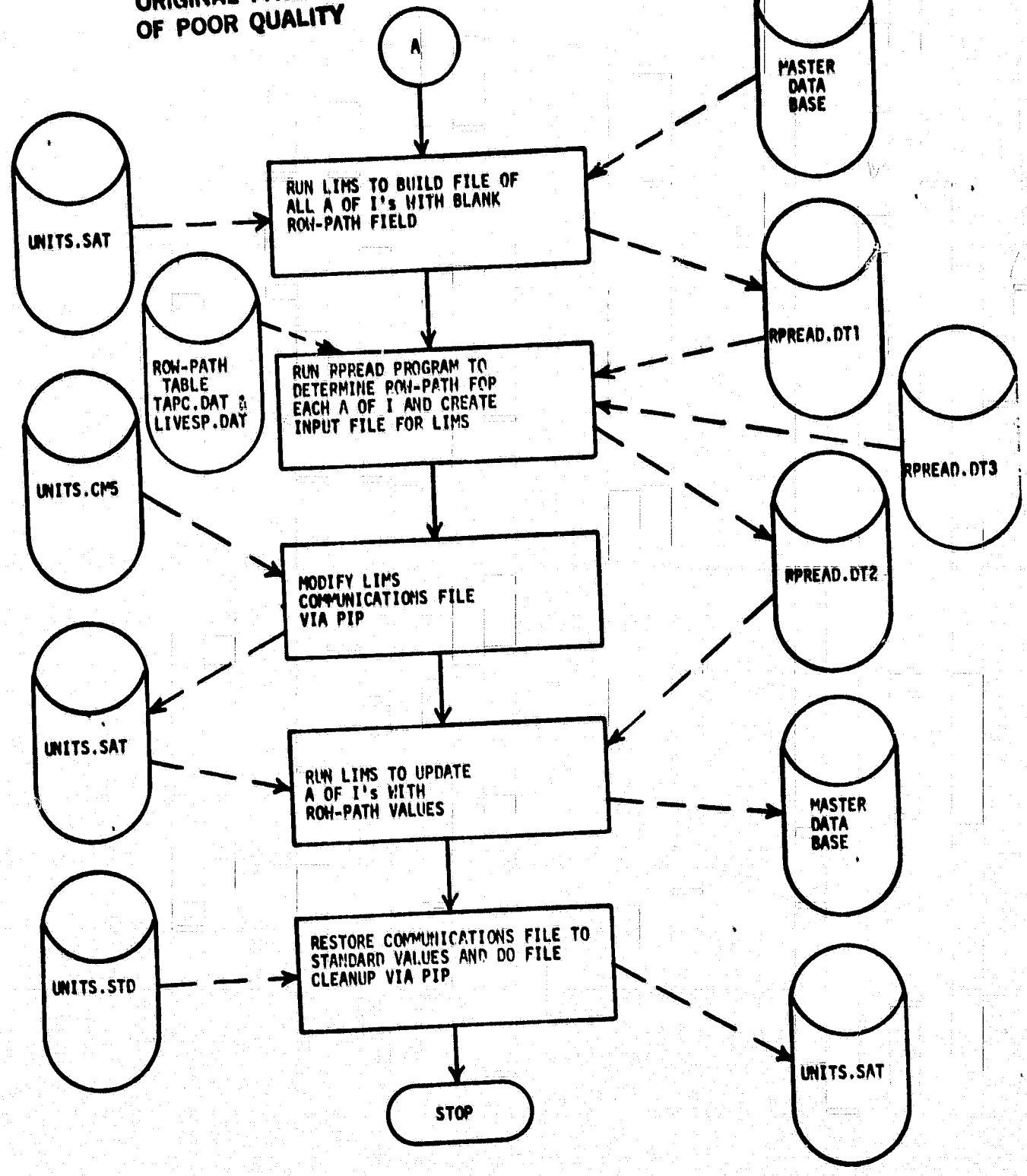

Figure 5.1-2 (concluded)
Flow of AOIADD.BIS

5.1.2 ADD AREA OF INTEREST PROGRAM, AOIADD

o Input

1. The card image file AOIADD.DT1 containing the user input cards.
2. The LIVES system parameter file, LIVESP.DAT.

o Output

1. The batch runstream delay file WAITR1.DAT.
2. The LIMS input data file AOIADD.DT2, a copy of AOIADD.DT1 except that the date and time have been inserted in columns 54-61 of the 'A' cards.
3. The LIMS input record ID file AOIADD.DIR.
4. A printer listing of each card image stored in AOIADD.DT2.

o Description

This program reads the input cards, makes certain edits, adds the date-time field to the card images, and sends the card images and a directory file to LIMS to add the cards to the Master Data Base and print a report. For a more detailed description, refer to the flowchart in figure 5.1-3.

o Flow

The flow of this program is described in figure 5.1-3.

o Subroutines Called

EXCDMS - executes LIMS to update the Master Data Base and print a report.

o Errors and diagnostics

1. The input card contains data which is incompatible with the format type.
2. The input card contains an invalid area of interest ID.

3. The input and sequence is incorrect or the card identifier is missing or incorrect.

4. The input card has an invalid user ID.

5. Data from input record was not added (status = _).

ORIGINAL PAGE IS
OF POOR QUALITY

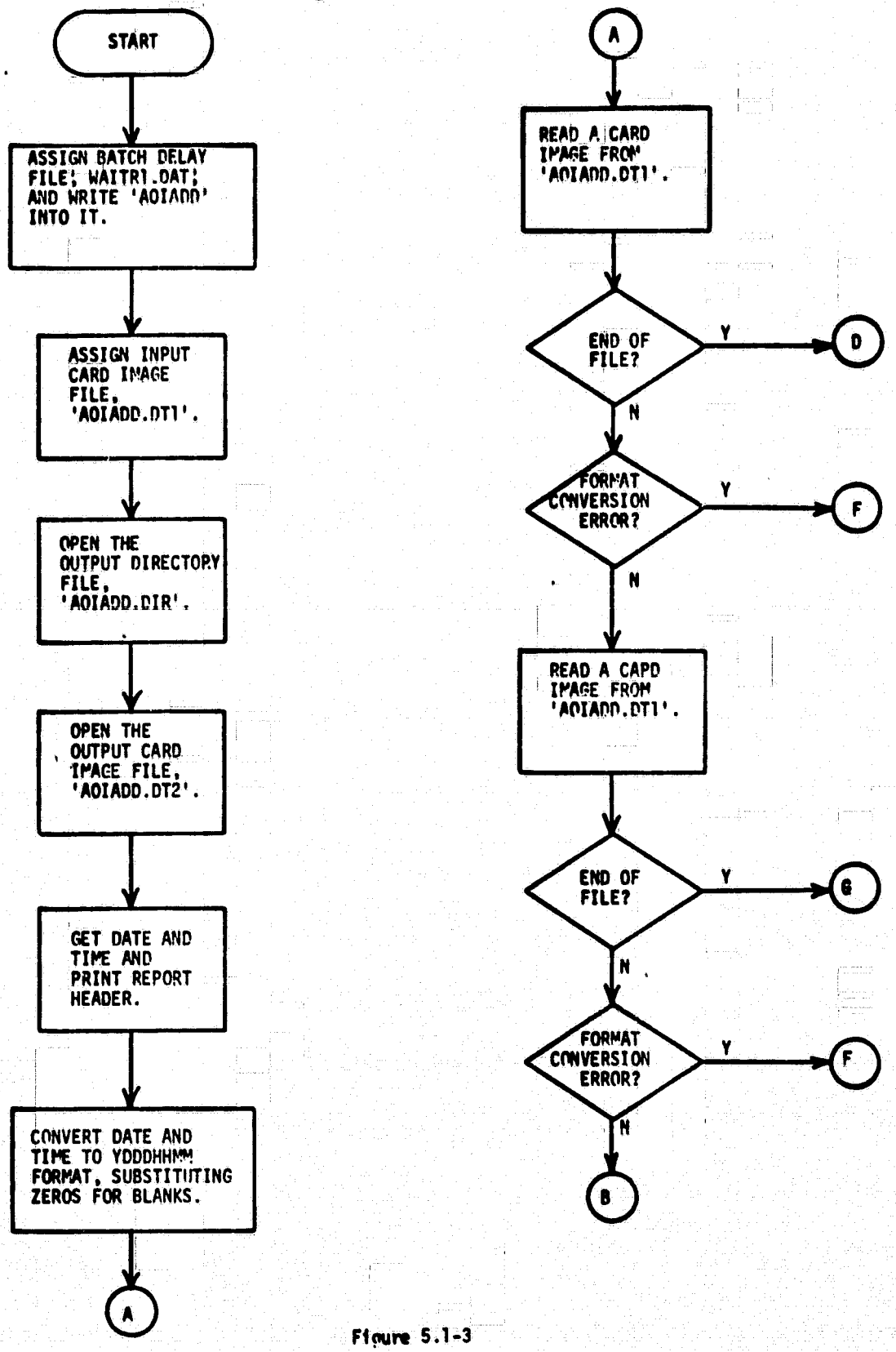

Figure 5.1-3
Flow of AOIADD Program

ORIGINAL PAGE IS
OF POOR QUALITY

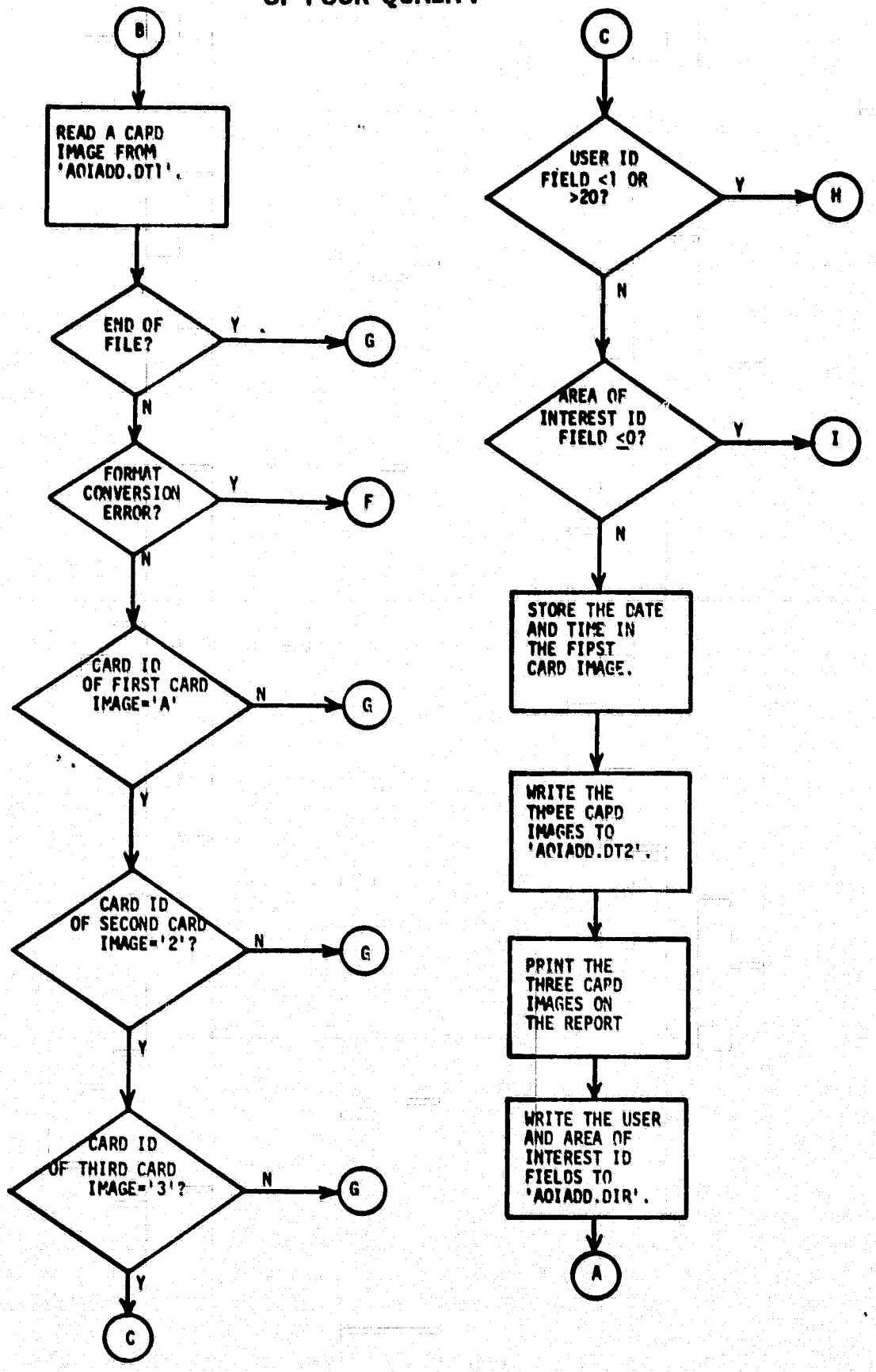

Figure 5.1-3 (continued)
Flow of AOIADD Program

ORIGINAL PAGE IS
OF POOR QUALITY

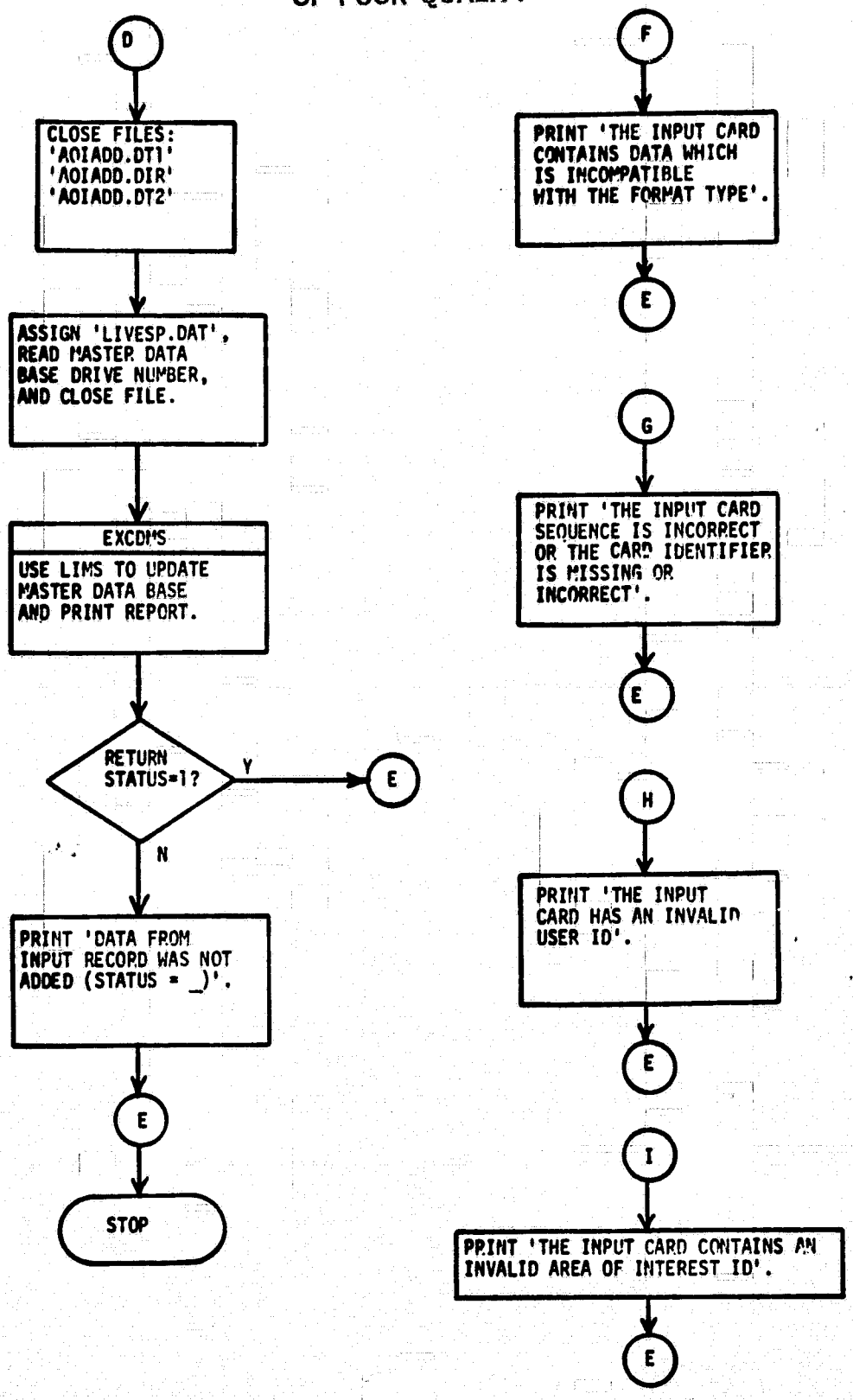

Figure 5.1-3 (concluded)
Flow of AOIADD Program

5.1.3 BATCH RUNSTREAM DELAY PROGRAM, WAITR1

o Input

The trigger file, SY:WAITR1.DAT.

o Output

None

o Description

This program first waits two seconds, then goes into a loop where it attempts to assign the trigger file and upon failure, waits one second and goes back to the top of the loop. When successful assignment occurs, this program exits.

o Flow

The flow of this program is described in figure 5.1-4.

o Subroutine called

No user subroutines are called.

o Errors and diagnostics

None

ORIGINAL PAGE IS
OF POOR QUALITY

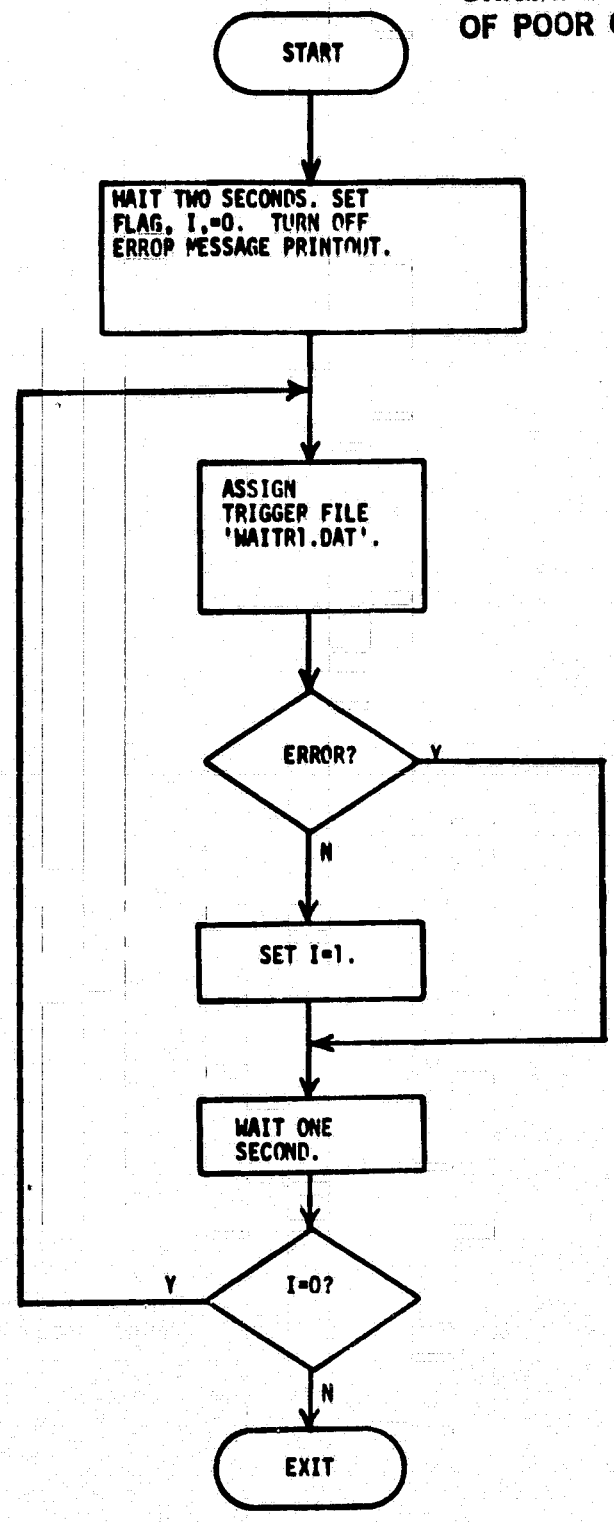

Figure 5.1-4
Flow of WAITR1 Program

5.2 MODIFY (UPDATE) AREA-OF-INTEREST DEFINITIONS, AOIUPD

Existing area-of-interest definitions in the Master (Archive) Data Base are changed, normally at the discretion of a LIVES user.

5.2.1 BATCH RUN STREAM AOIUPD.BIS

o Input

Cards must be furnished in the format shown in figure 5.2-1.

A user may change any field in an Area-of-Interest definition (except User ID, Area-of-Interest ID and location) by submitting cards in the format shown in figure 7.2-1. Only the fields which contain data will be changed in the data base; i.e., a blank field will cause the existing value in that field to be retained. Each change transaction must consist of all three cards of the set (same layout as for additions) even though no field may be changing on a particular card.

Command file for updates using RIMS.

- To write Area of Interest Records before update
- To update data base
- To write Area of Interest Records after update

o Output

The only output consists of changed records in the data base. Records which were not found in the data base and were submitted for updating have their record ID's printed.

o Description

The run stream, AOIUPD.BIS calls the following modules in order.

AOIUPD	(5.2.2)
WAITR2	(5.2.3)

CHANGE AREA OF INTEREST TRANSACTION CARD

Column	Format	Contents
2	'C'	Card Identifier Field - Must be a 'C'
4-19	AA...AA	Country name. Only leftmost six characters will be carried by LIVES.
21-24	DDDD	Region. Only rightmost two digits will be carried by LIVES.
26-29	DDDD	Zone.
31-34	DDDD	Strata.
51-52	DD	User ID. An identification number associated with a particular user project. The number can range from 1 through 19 and must be right-justified and blank-filled.
54-61	DD...DD	Reserved for use by LIVES. The current date and time will be placed here in the input card images on disk in a YDDDHHMM format.
		First Area of Interest (Site) Card
2	'2'	Card Identifier Field - Must be a '2'
4-7	DDDD	Site or Area of Interest ID. Number may range from 0001 through 9999.
9	D	Segment Type.
11	A	Crop Type.
29	D	Film Processing Field.
31-34	DDDD	Color Codes Field.
		Second Area of Interest (Site) Card
2	'3'	Card Identifier Field - Must be a '3'.
4-7	DDDD	Site or Area of Interest ID - same number as on the '2' card.
10-13	DDDD	Acquisition Start Date is YDDD format, where Y is the last digit of the year, and DDD is the Julian day of the year.
52-55	DDDD	Acquisition Stop Date in YDDD format.

Figure 5.2-1
Cards for Change of Area of Interest Description

Update card images are read and a new file containing each area of interest ID is generated. This file is then used to select the associated (before modification) area of interest descriptions from the data base which are written to an output file. The data base updates are made using the original update card images. Then the updated area of interest descriptions are printed.

The output files generated from the data base description records are printed before and after modification. A comparison is done between the original update card image file and the output file after modification; any area of interest description record ID in the update card image file not in the before modification output file is printed.

LIMS is used for selecting records, making updates, and printing before and after changes are made to the data base.

o Flow

The flow of the batch stream is shown in figure 5.2-2.

o Subroutines called

Date
Time
EXCDMS

o Errors and Diagnostics

1) The input card contains data which are incompatible with the format type.
2) The input card contains an invalid area of interest ID.
3) The input card sequence is incorrect or the card identifier is missing or incorrect.
4) The input card has an invalid user ID.
5) Data to be updated from the data base was not printed (status =)
6) Data to be updated in the data base was not updated (status =)

5.2.2 UPDATE AREA OF INTEREST PROGRAM, AOIUPD

o Input

1. The card image file AOIUPD.DT1 containing the user input cards.
2. The LIVES Parameter File, LIVESP.DAT.
3. The LIMS Report File AOIUPD.RP1.

o Output

1. The batch runstream delay file WIATR2.DAT
2. The LIMS input data file AOIUPD.DT2, a copy of AOIUPD.DT1 with the date and time inserted in columns 54-61 of the 'C' cards.
3. The LIMS input record ID file UPDDIR.DAT.
4. A printer listing of each card image stored in AOIUPD.DT2.

o Description

This program reads the input cards, makes certain edits, and adds the date-time to the appropriate field on the card image. It then sends the card images and a directory file to LIMS which updates the master data base, and prints a report. For further description, refer to the flowchart in figure 5.2-3.

o Flow

The flow for the AOIUPD program is described in figure 5.2-3.

o Subroutines called

DATE	Will obtain the current date as maintained within the system in a 9-byte string form.
EXCDMS	Executes LIMS to update the master data base and print a report.
IDATE	Will obtain the current date as maintained within the system with three integer values.
TIME	Will obtain the current time in hours, minutes and seconds within an 8-byte string.

ORIGINAL PAGE IS
OF POOR QUALITY

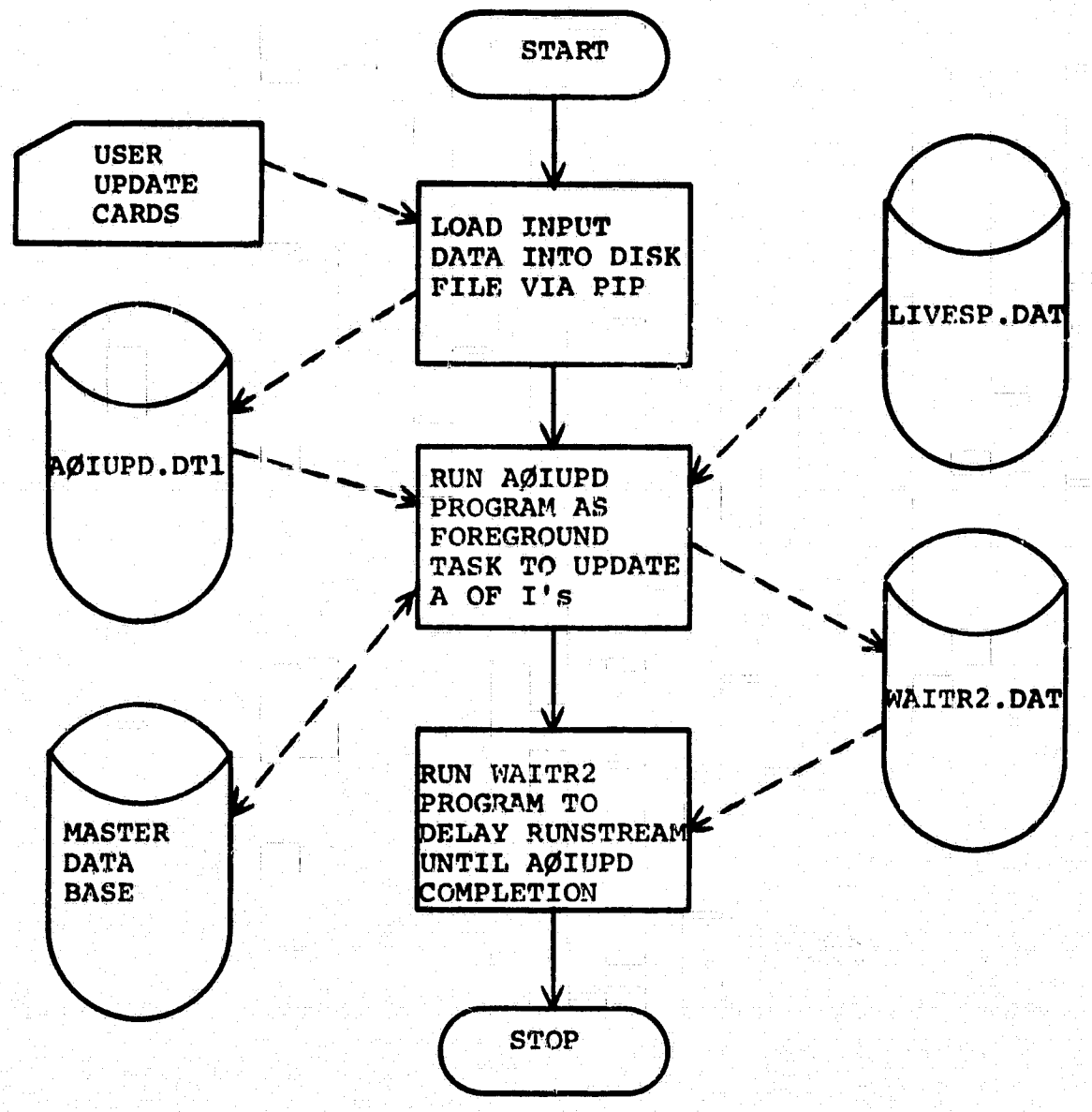

Figure 5.2-2 Flow of AØIUPD.BIS

5.2.3 BATCH RUNSTREAM DELAY PROGRAM WAITR2

o Input

The trigger file, SY:WAITR2.DAT.

o Output

None

o Description

This program first waits two seconds, then goes into a loop where it attempts to assign the trigger file and upon failure, waits one second and goes batck to the top of the loop. When successful assignment occurs, this program exits.

o Flow

The flow is described in figure 5.2-4.

o Subroutines called

No user subroutines are called.

o Errors and Diagnostics

None

ORIGINAL PAGE IS
OF POOR QUALITY

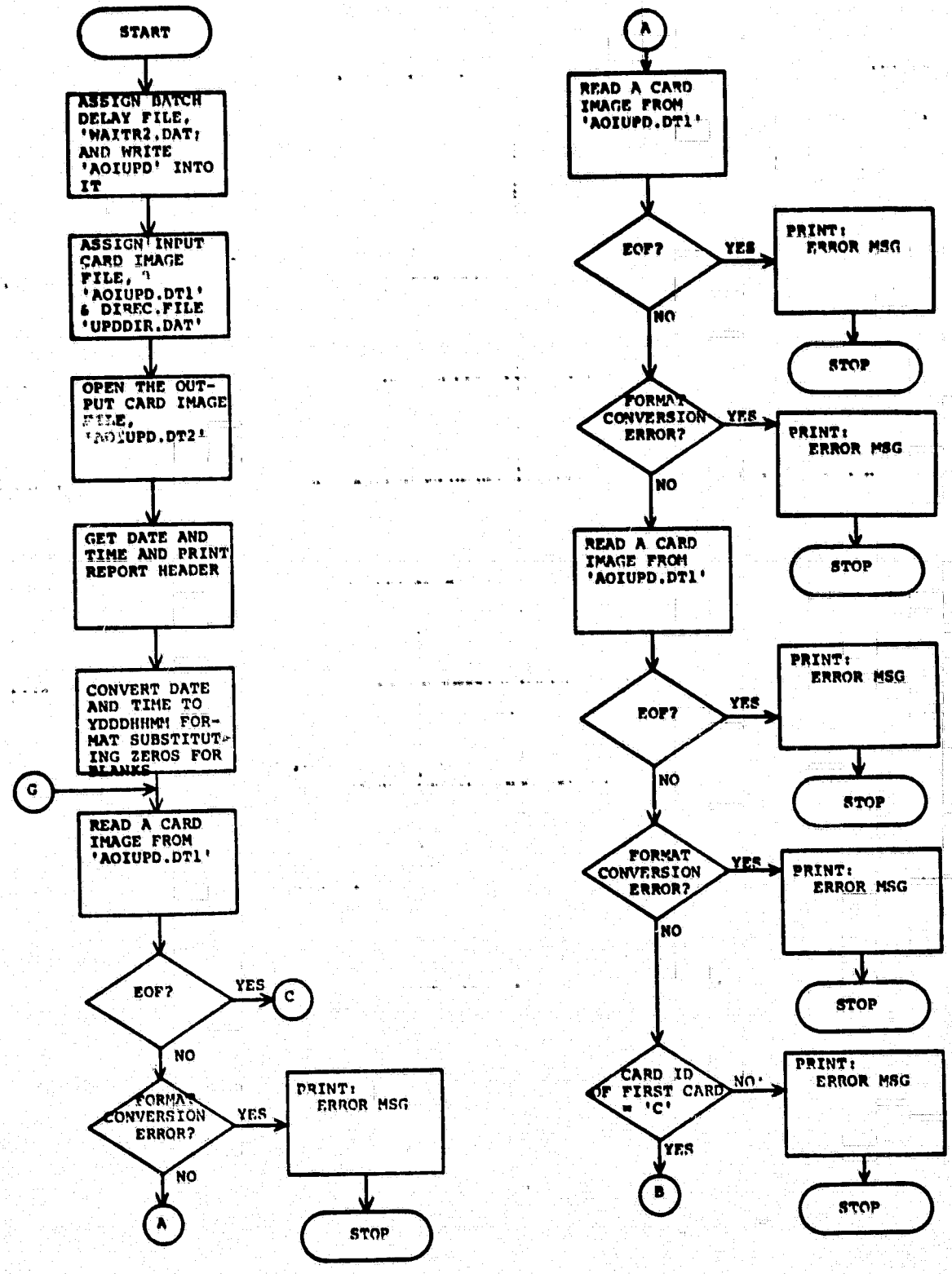

Figure 5.2-3
Flow of AOIUPD Program

ORIGINAL PAGE IS
OF POOR QUALITY

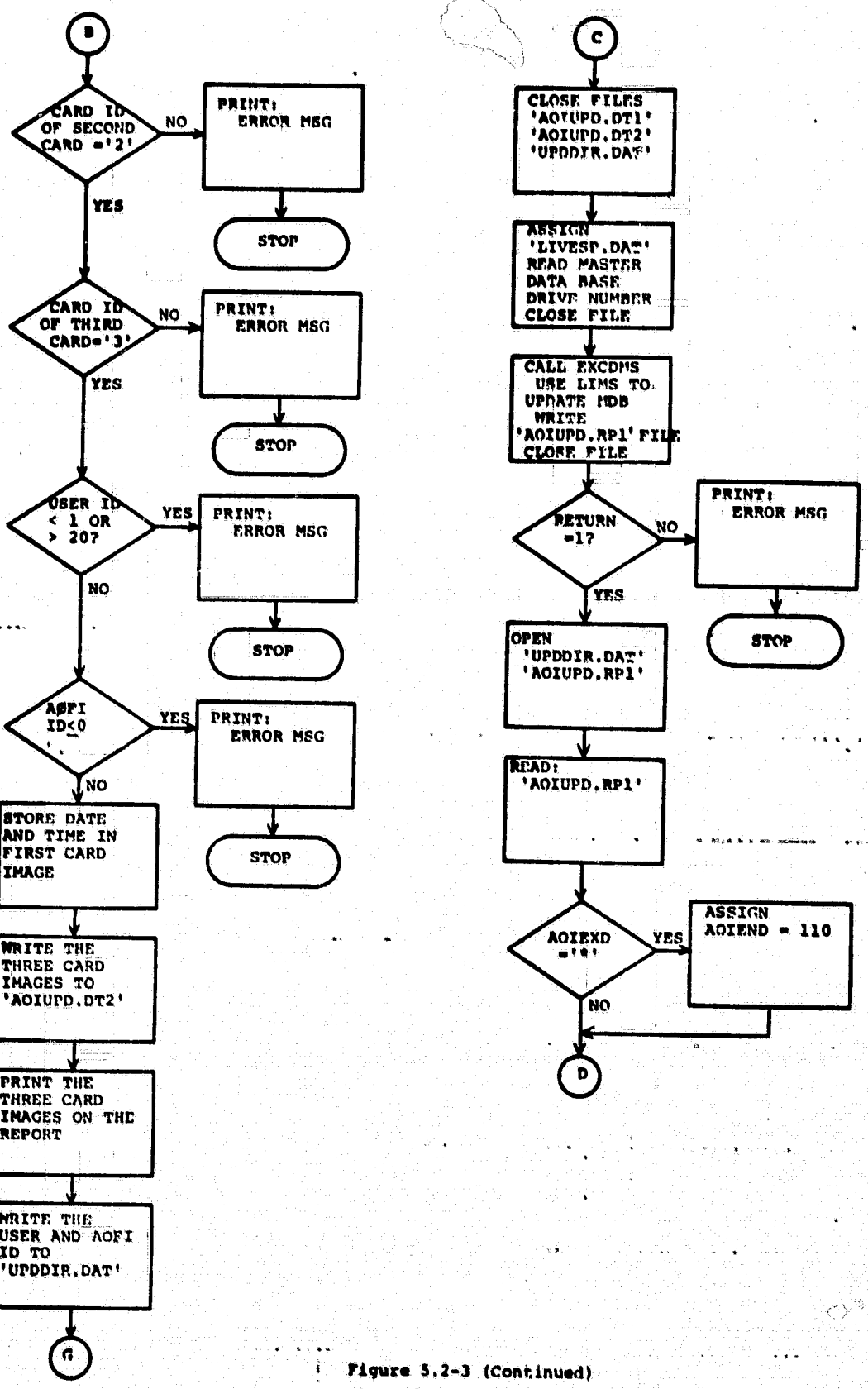

Figure 5.2-3 (Continued)
Flow of AOIUPD Program

ORIGINAL PAGE IS
OF POOR QUALITY

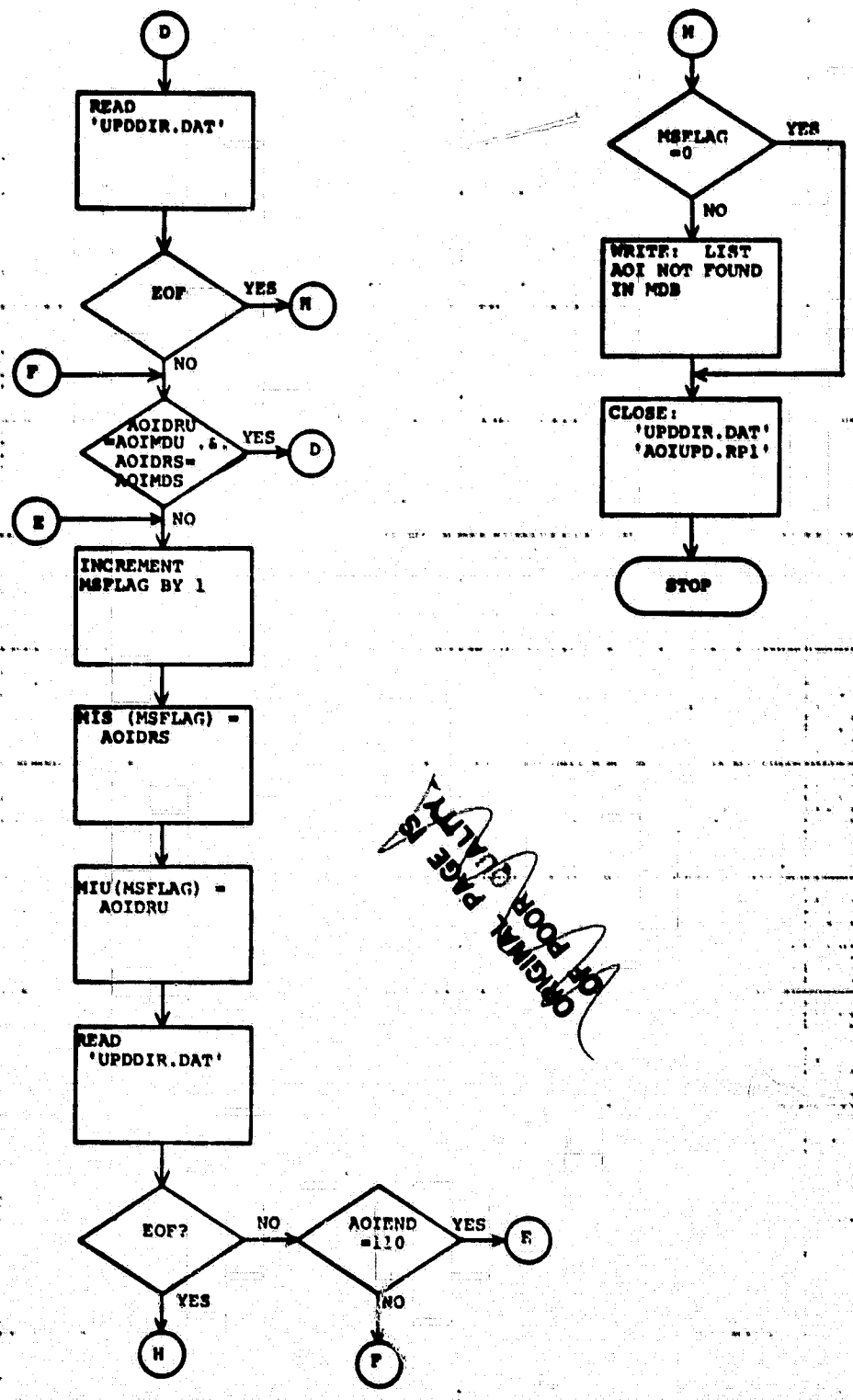

ORIGINAL PAGE IS
OF POOR QUALITY

Figure 5.2-3 (Concluded)
Flow of AOIUPD Program

ORIGINAL PAGE IS
OF POOR QUALITY

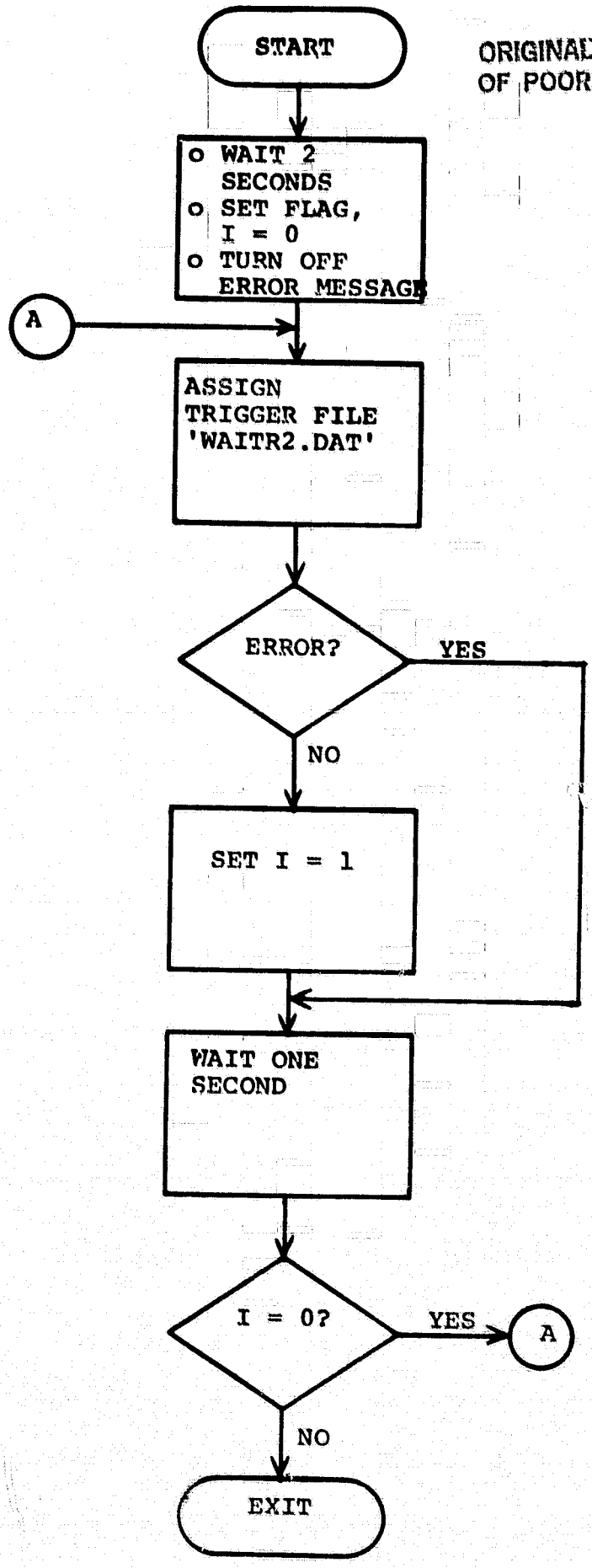

Figure 5.2-4

Flow of WAITR2 Program

5.3 DELETE AREA-OF-INTEREST DEFINITIONS, AOIDEL

Area-of-Interest descriptions in the Master (Archive) Data Base can be deleted with this module. Once deleted they cannot be recovered. However, the module in section 5.1 can be used to recreate them.

5.3.1 BATCH RUN STREAM, AOIDEL.BIS

o Input

Cards specify areas to be deleted, as shown in figure 5.3-1.

Command file for LIMS: AØIDEL.CM1

o Output

There is no output unless area of interest records requested for deletion were not found in the data base. In this case, the area of interest records will be printed.

o Description

A batch run stream, AOIDEL.BIS calls the following:

AOIDEL	(5.3.2)
WAITR3	(5.3.3)

The AOIDEL program creates a temporary file which contains a set of records that are to be deleted. This file is in turn used by LIMS to delete the corresponding records from the data base.

o Flow

See the flowchart for AOIDEL.BIS, figure 5.3-2.

o Subroutines called

See above.

DELETE AREA OF INTEREST TRANSACTION CARD

Column	Format	Contents
2	'D'	Card Identifier Field - Must be a 'D'.
4-7	DDDD	Site or Area of Interest ID. Number may range from 0001 through 9999.
51-52	DD	User ID. Number may range from 1 through 19 and must be right-justified and blank-filled.

Figure 5.3-1

Card for Deleting of Area of Interest Description

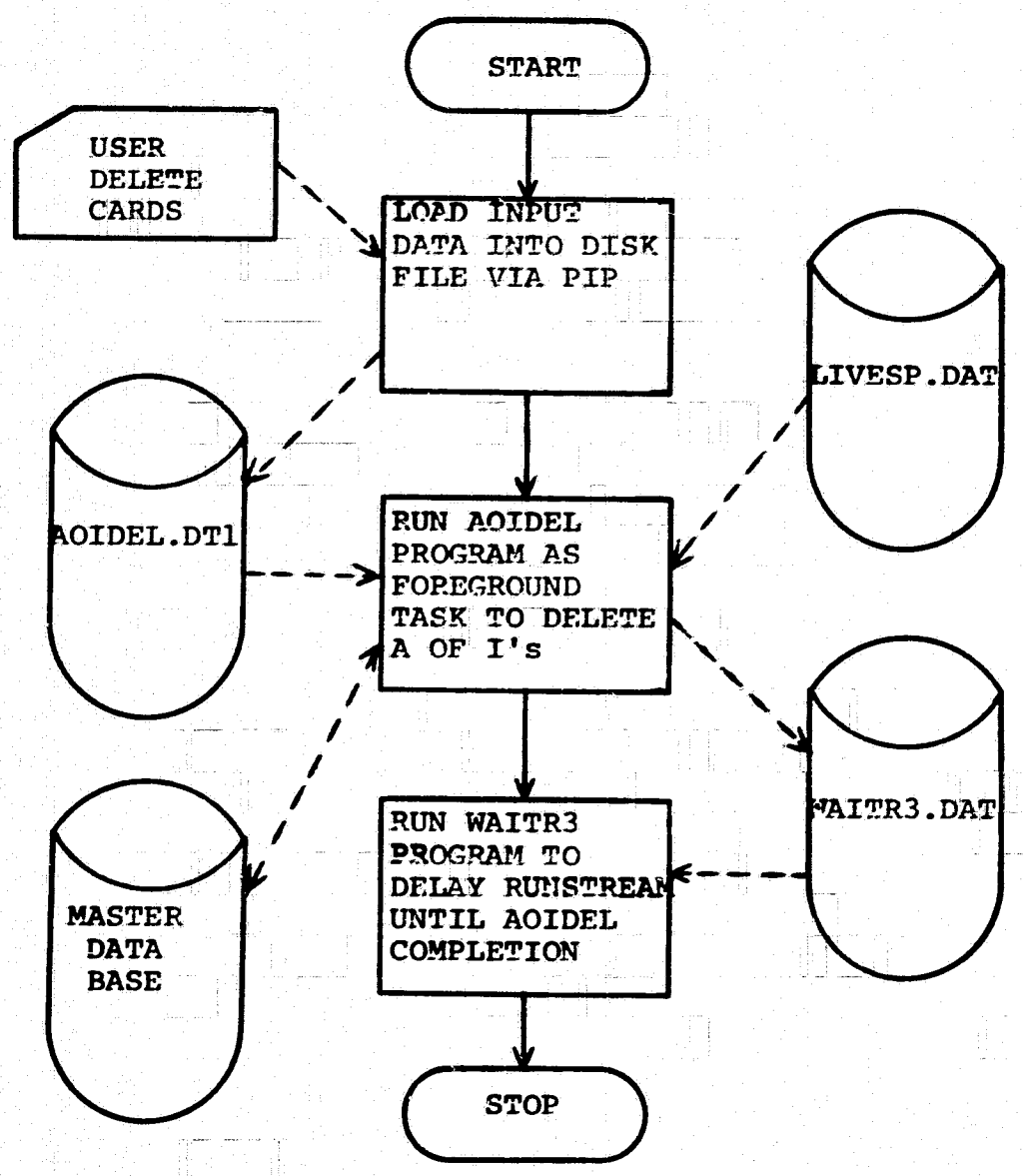

Figure 5.3-2 Flow of AOIDEL.BIS

ORIGINAL PAGE IS OF POOR QUALITY

o Errors and Diagnostics

1. The input card contains data which are incompatible with the format type.
2. The input card contains an invalid area of interest ID.
3. The input card identifier is incorrect or is missing.
4. The input card has an invalid user ID.
5. Data to be deleted from the data base was not deleted (status =).
6. Data to be deleted from the data base was not printed (status =).

5.3.2 DELETE AREA OF INTEREST PROGRAM, AOIDEL

o Input

1. The card image file AOIDEL.DT1 containing the user input cards.
2. The LIVES Parameter File, LIVESP.DAT.
3. The LIMS Report File, AOIDEL.RP1.

o Output

1. The batch runstream delay file WAITR3.DAT.
2. The LIMS Input data file AOIDEL.DT1.
3. The LIMS input record ID File DELDIR.DAT.
4. A printer listing of each card image stored in AOIDEL.DT1.

o Description

This program reads the input cards and makes certain edits. It then sends the card images and directory file to LIMS which deletes records from the Master Data Base and prints a report. For further description, refer to the flowchart in figure 5.3-3.

o Flow

The flow for the AOIDEL program is described in figure 5.3-3.

o Subroutine Called

DATE Will obtain the current date as maintained within the system in a 9-byte form.

EXCDMS Executes LIMS to update the master data base and print a report.

TIME Will obtain the current time in hours, minutes and seconds within an 8-byte string.

ORIGINAL PAGE IS
OF POOR QUALITY

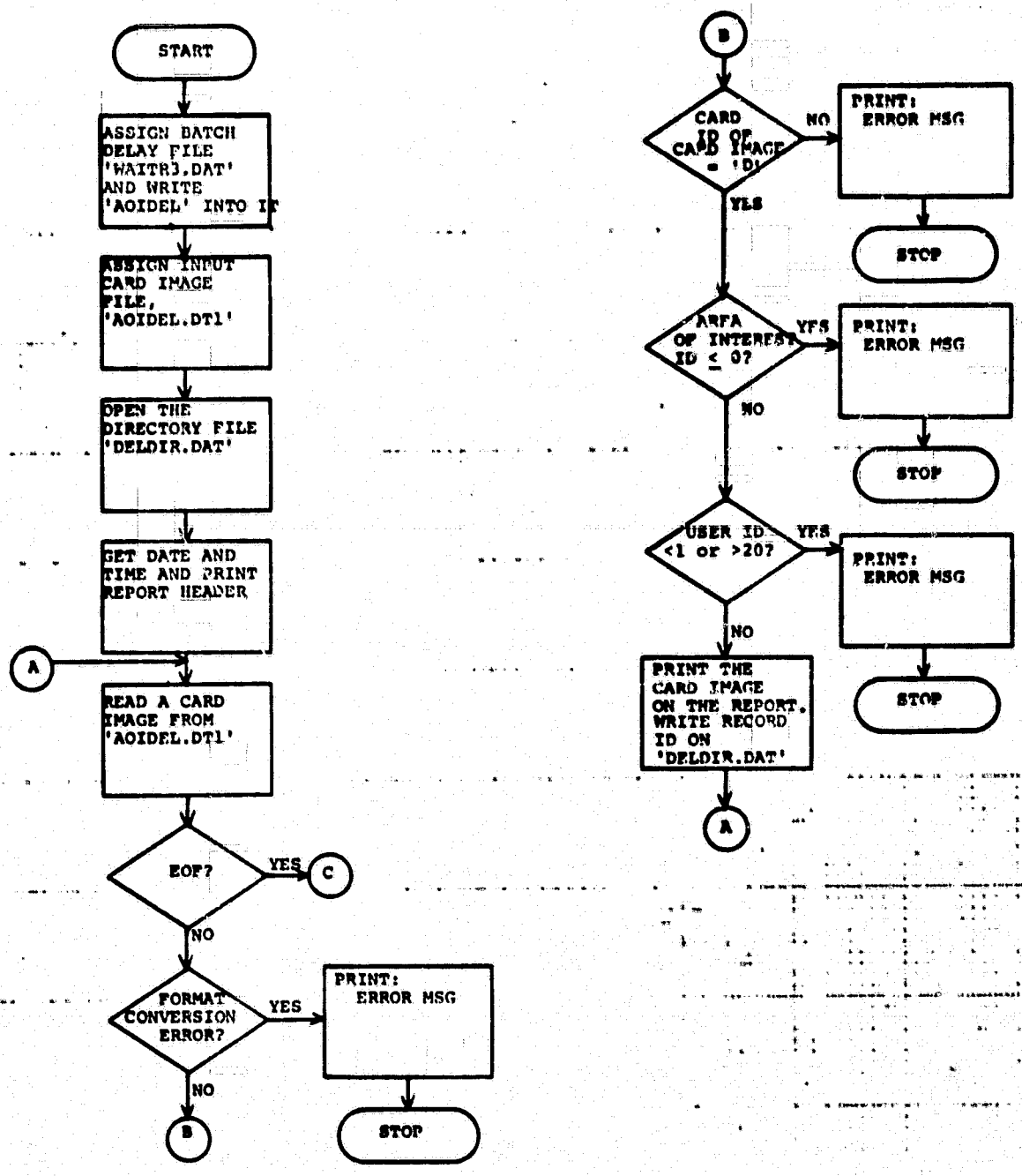

Figure 5.3-3
Flow of AOIDEL Program

ORIGINAL PAGE IS
OF POOR QUALITY

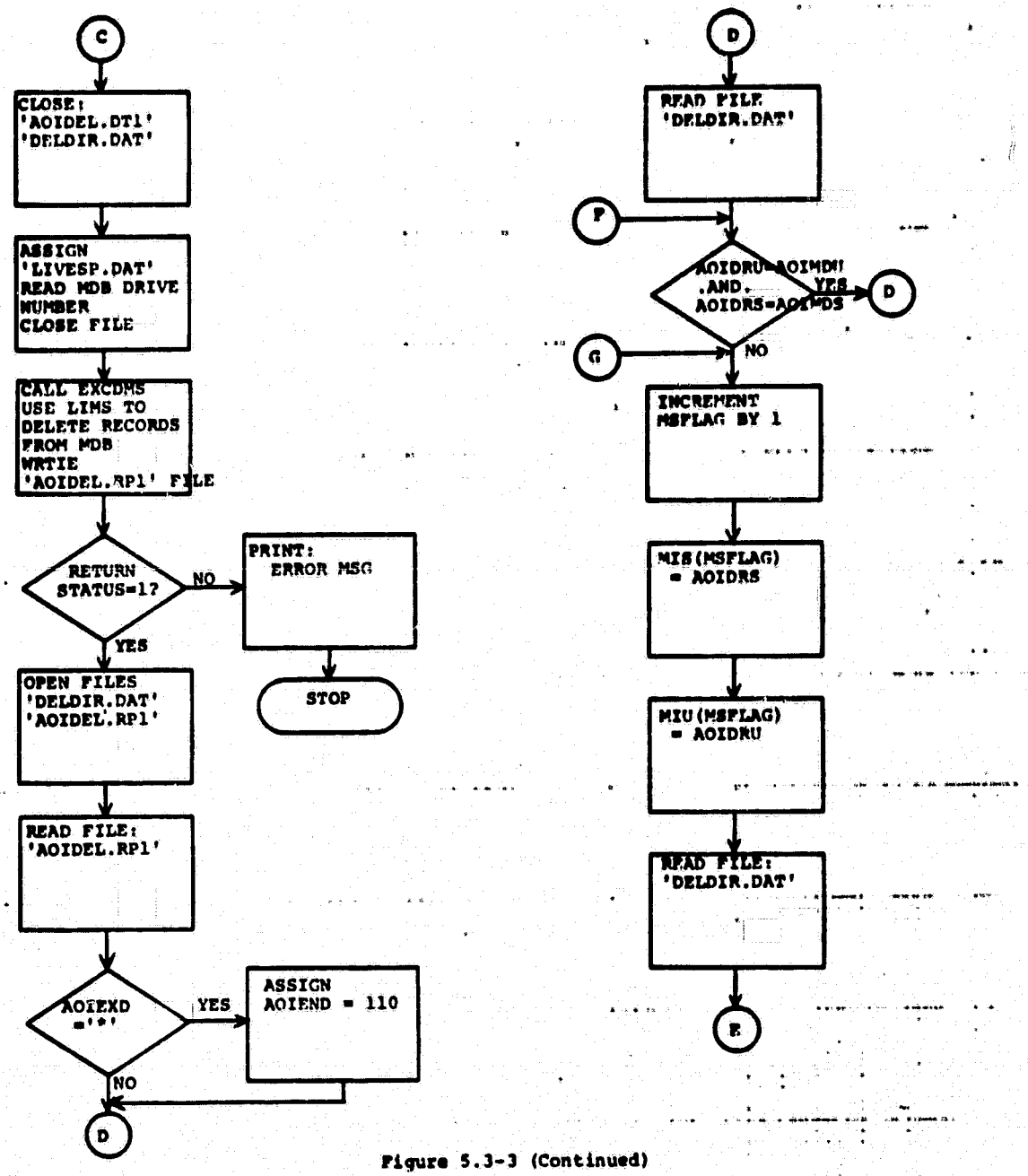

Figure 5.3-3 (Continued)
Flow of AOIDEL Program

ORIGINAL PAGE IS
OF POOR QUALITY

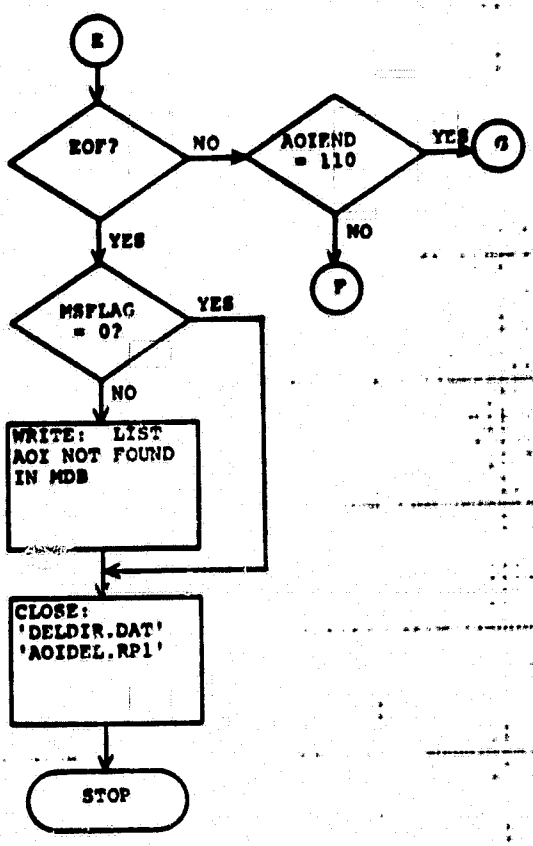

Figure 5.3-3 (Concluded)
Flow of AOIDEL Program

ORIGINAL PAGE IS
OF POOR QUALITY

o Errors and Diagnostics

1. The input card contains data which are incompatible with the format type.

2. The input card contains an invalid area of interest ID.

3. The input card sequence is incorrect or the card identifier is missing or incorrect.

4. The input card has an invalid user ID.

5. Data to be updated from the data base was not printed (status =).

5.3.3 BATCH RUNSTREAM DELAY PROGRAM, WAITR3

o Input

The trigger file, SY:WAITR3.DAT.

o Output

None

o Description

This program first waits two seconds, then goes into a loop where it attemps to assign the trigger file and upon failure, waits one second and goes back up to the top of the loop. When successful assignment occurs, this program exits.

o Flow

The flow is described in figure 5.3-4.

o Subroutines Called

No user subroutines are called.

o Errors and Diagnostics

None

ORIGINAL PAGE IS
OF POOR QUALITY

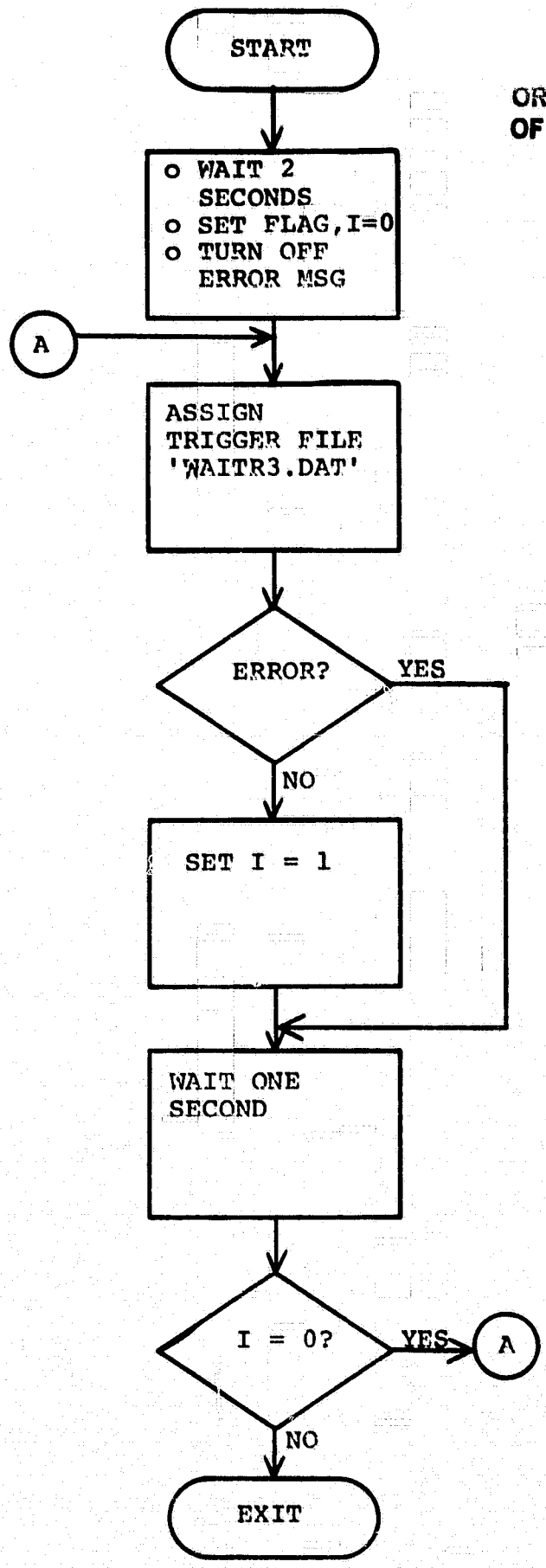

Figure 5.3-4
Flow of WAITR3 Program

5.4 WORLD REFERENCE SYSTEM (WRS) ROW-PATH GENERATOR, RPREAD

This module locates a primary and secondary WRS row and path designation for the user's areas of interest. Full areas of interest within a scene will be considered as being the most important acquisitions; however, if there are no full areas of interest within the scene, the row and path designators of partial acquisitions will be the outputs of this module. Partial acquisitions are defined by the criterion that the center point of the area of interest must be contained within the scene.

The following additional criteria will determine the primary and secondary row and path designators:

1. The first area of interest acquired on any path will be considered as "Primary." Paths are processed from East to West. Rows are processed North to South.
2. An area of interest acquired on any subsequent path will be considered as "Secondary."

A maximum of 100 areas of interest may be processed during any one job run due to core memory storage limitations and the amount of memory required by this software.

This module is comprised of a main driving routine, RPREAD, and three subroutines that will be described below, MAINGN, PPGEN2 AND TMECTR.

5.4.1 MAIN DRIVING ROUTINE, RPREAD

o INPUT

WRS Nominal Image Center Latitudes and Longitude Table
Areas-of-Interest File
System Default File

o OUTPUT

Areas-of-Interest variables, including the associated Row-Path for detected primary and secondary scene acquisitions.

o DESCRIPTION

Default values are obtained from the System Default File and inserted in scene and area-of-interest arrays if these variables were not specified by the user.

A block of scene latitude-longitude and associated row-path combinations is obtained from the WRS Table. This block of data is 248 rows by 15 paths. There are 17 such blocks that are required to be in the WRS Table to cover the desired surface of the earth.

One scene at a time is then processed through the remaining three subroutines to determine if any areas of interest are contained in this scene.

After reading the seventeen blocks of data in the WRS Table, the area-of-interest variables that now contain the primary and secondary row-paths acquired are returned to the Areas-of-Interest File.

o FLOW

See figure 5.4-1.

o SUBROUTINES CALLED

Arguments - SCENE
Number of Areas of Interest
Area of Interest array
Full scene pixels
Full scene lines
Maximum number of areas of interest
Flag to indicate all primary and secondaries have been found

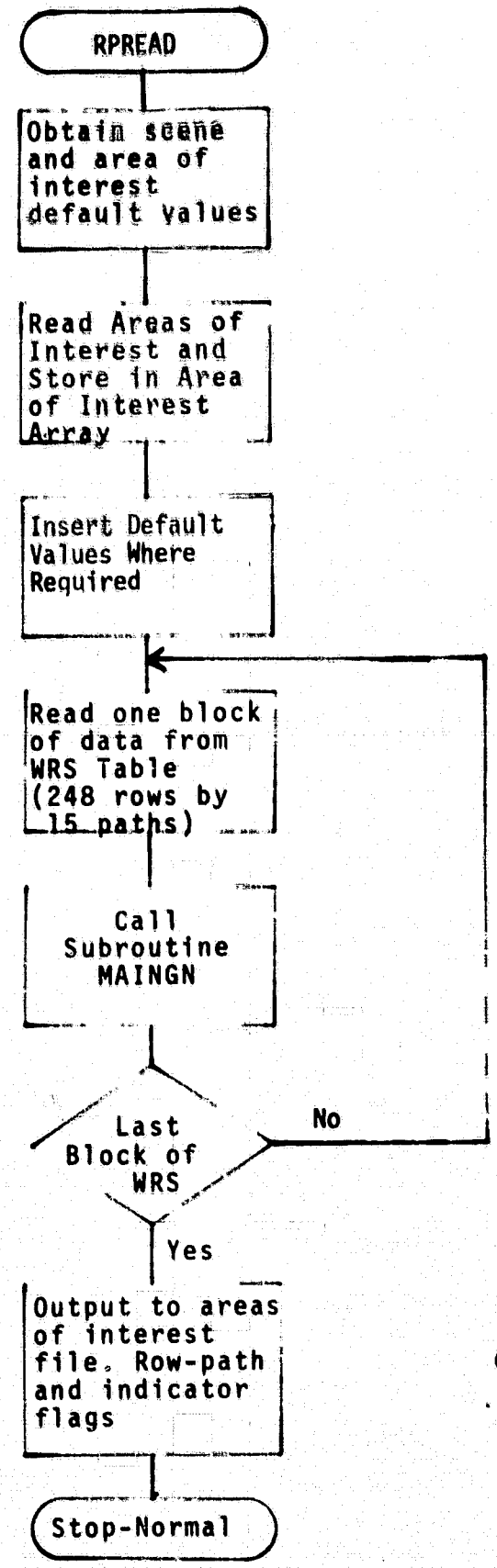

ORIGINAL PAGE IS OF POOR QUALITY

Figure 5.4-1 - Flow of RPREAD

o ERRORS AND DIAGNOSTICS

No error message.

If run completes, message is: STOP-NORMAL, output to the operator terminal.

5.4.2 CALCULATE AREA-OF-INTEREST COORDINATES, SUBROUTINE, MAINGN (SCEN, IA, AOFI, FFP, FFL, NAOFI, ISTP)

o INPUT - Calling Arguments:

- SCEN - Scene Variables
- IA - Number of areas of interest
- AOFI - Area of interest array
- FFP - Number of full scene pixels
- FFL - Number of full scene lines
- NAOFI - Maximum number of areas of interest
- ISTP - Flag to indicate all primary and secondaries have been found

o OUTPUT

None.

o DESCRIPTION

For the scene coming into this routine, calculate the zone number, this is required to calculate the proper U.T.M. coordinates of each area of interest.

Tests for area of interest within 20° latitude and 20° longitude of the center point of the scene.

Tests for acquisition of a primary or secondary area of interest and sets indicators when both are found.

Tests for the adjustments that need to be made at the $\pm 180^{\circ}$ longitude anamoly.

Calculates the four corner points of the area of interest in U.T.M.

Coordinates if all other conditions require that these coordinates be determined.

o SUBROUTINES CALLED

TMECTR (U.T.M. Coordinate Calculation)

RPGENZ (Areas of interest comparison with the current scene)

o FLOW

See figure 5.4-2

o ERRORS AND DIAGNOSTICS

None.

5.4.3 COMPARE AREA OF INTEREST WITH SCENE, SUBROUTINE RPGEN2 (SCEN, IA, AOFI, IZONE, FFP, FFL, NAOFI)

o INPUT - Calling Arguments:

SCEN - Scene Variables

IA - Number of Areas of Interest

AOFI - Area of Interest Array

IZONE - Zone identifier

FFP - Number of full scene pixels

FFL - Number of full scene lines

NAOFI - Maximum number of areas of interest

o OUTPUT

None.

o DESCRIPTION

Calculates U.T.M. coordinates for corners of the scene brought into this subroutine.

ORIGINAL PAGE IS
OF POOR QUALITY

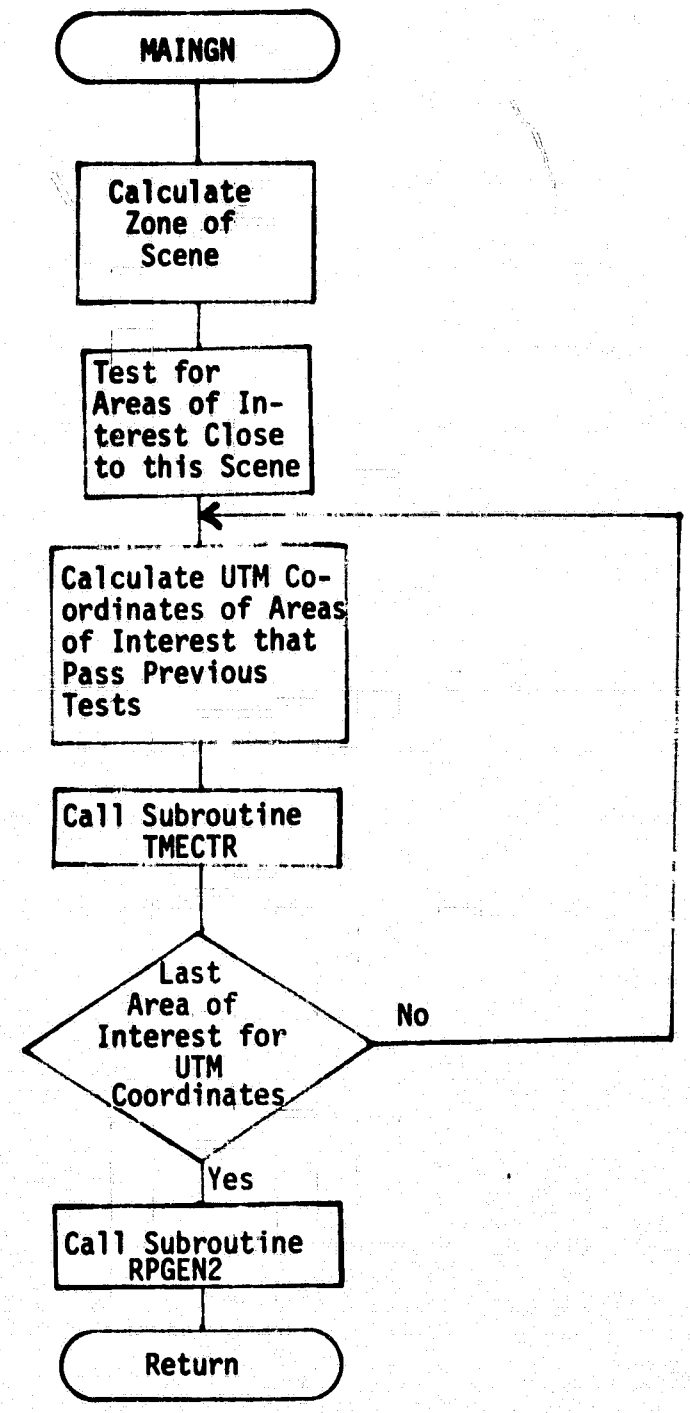

Figure 5.4-2 - Flow of MAINGN

Makes comparison of all areas of interest in the following manner:

1. Full area of interest within scene, yes? if no Primary, then this is Primary.
2. Primary? if so, then Secondary.
3. Partial? if so, then this will become partial primary or secondary until a full primary or secondary is found within subsequent scenes.
4. Set flags to indicate the following:
   Full Area of Interest (0,1,2)
      Primary (1)
      Secondary (2)
   Partial Area of Interest
      Primary Flag (1)
      Secondary Flag (1)

o FLOW

See figure 5.4-3

o SUBROUTINES CALLED
TMECTR (U.T.M. Coordinates Calculations)

o ERRORS AND DIAGNOSTICS
None.

5.4.4 U.T.M. COORDINATES CONVERSION, SUBROUTINE, TMECTR (PL, AXES, UTM, IZONE)

o INPUT - Arguments:
PL(1) - Latitude ($\pm$ 90°)
PL(2) - Longitude ($\pm$ 180°)
AXES(1) - Semi-major axis of the earth
AXES(2) - Semi-minor axis of the earth
IZONE - Zone within which transformation is to be computed

o OUTPUT - Arguments:
UTM(1) - Easting in meters
UTM(2) - Northing in meters

ORIGINAL PAGE IS
OF POOR QUALITY

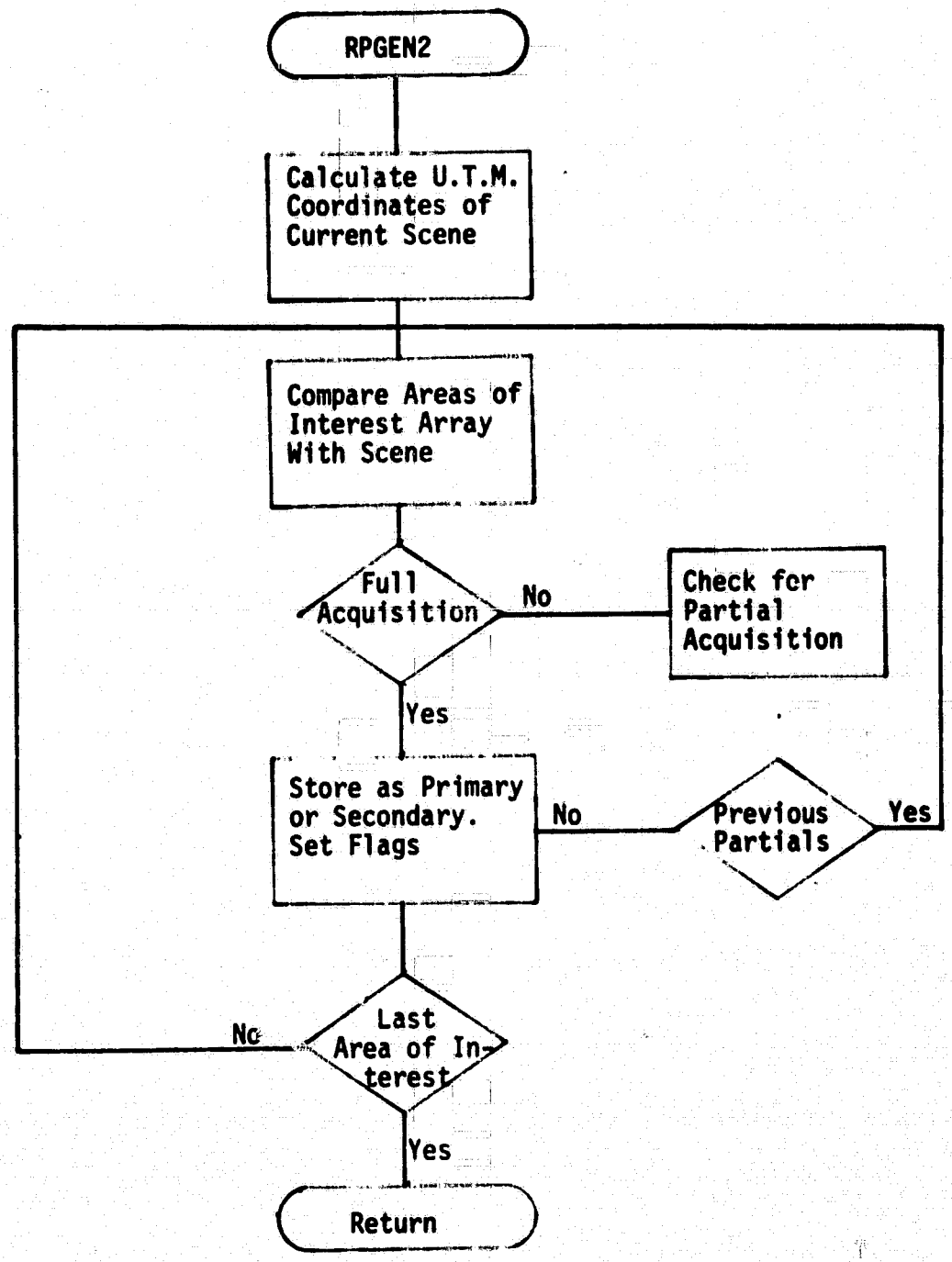

Figure 5.4-3 - Flow of RPGEN2

o DESCRIPTION

This subroutine will transform points specified by latitude and longitude into Universal Transverse Mercator coordinates.

o SUBROUTINES CALLED

None.

o ERRORS AND DIAGNOSTICS

None.

o FLOW

See figure 5.4-4

ORIGINAL PAGE IS
OF POOR QUALITY

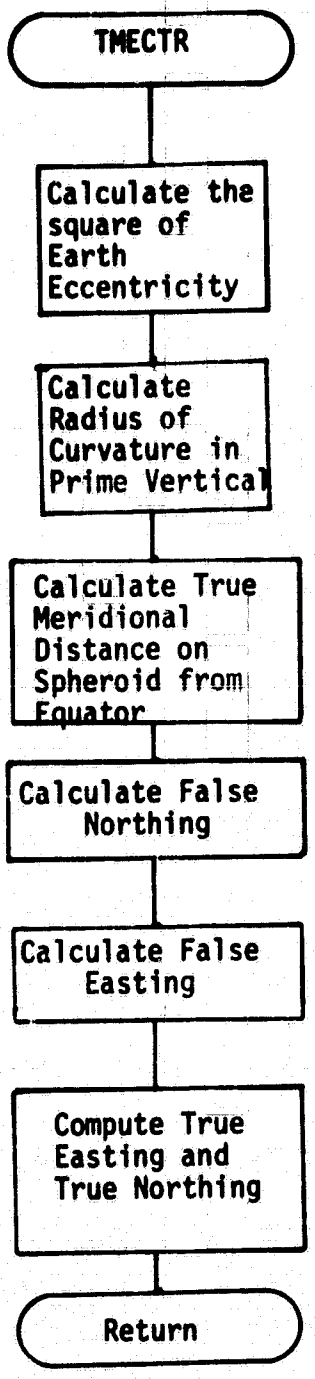

Figure 5.4-4 - Flow of TMECTR

5.5 REFERENCE IMAGE LOAD PROCESSOR, REFLOD

This processor will transfer imagery data from tape to disk. It will read files in Universal Image Format, reformat them, and write them to disk. This processor consists of the single program described below.

5.5.1 REFERENCE IMAGE LOAD REFLOD

o Input

Universal Formatted Computer Compatible Tape
Interactive/batch parameter data: USER ID, area of interest ID, Acquisition date, Discipline Registration band, tape unit information, tape number information, and indicator for primary or secondary scene.

o Output

Reference image files to reference image data base.

o Description

The processor begins by requesting tape unit and tape number information from the user. Next the user is requested to enter the user ID of the files to be created followed by control image data for each file to be processed. The control image data will consist of area of interest ID, acquisition date, and number to indicate primary or secondary scene. Each control image data entry will be on separate cards or data lines and the last entry for the current tape will be followed by a card or line containing the letter E in column 1. After the processor had been given the above information, it begins processing the tape as follows:

The current header record is read, and segment and acquisition data from the header is compared to the same data entered by the user. If a match is found a disk file name is created for

the current file and the file control block and header record are written to disk using the fast video subroutines. Then each line of image data is read from tape, and the band requested by the user is selected and written to the disk using the fast video subroutines. Image data is processed until an end of file is encountered. Then the next header record is read and processed in the same manner.

Processing continues until all requested files are processed, or a double end of file is encountered. The processor then issues a rewind to the tape, furnishes dismount instructions to the operator, and exits.

o <u>Flow Chart</u>

The chart is presented in figure 5.5-1.

o <u>Subroutines Called</u>

MAGTAP, INFTFF, FSTVID.

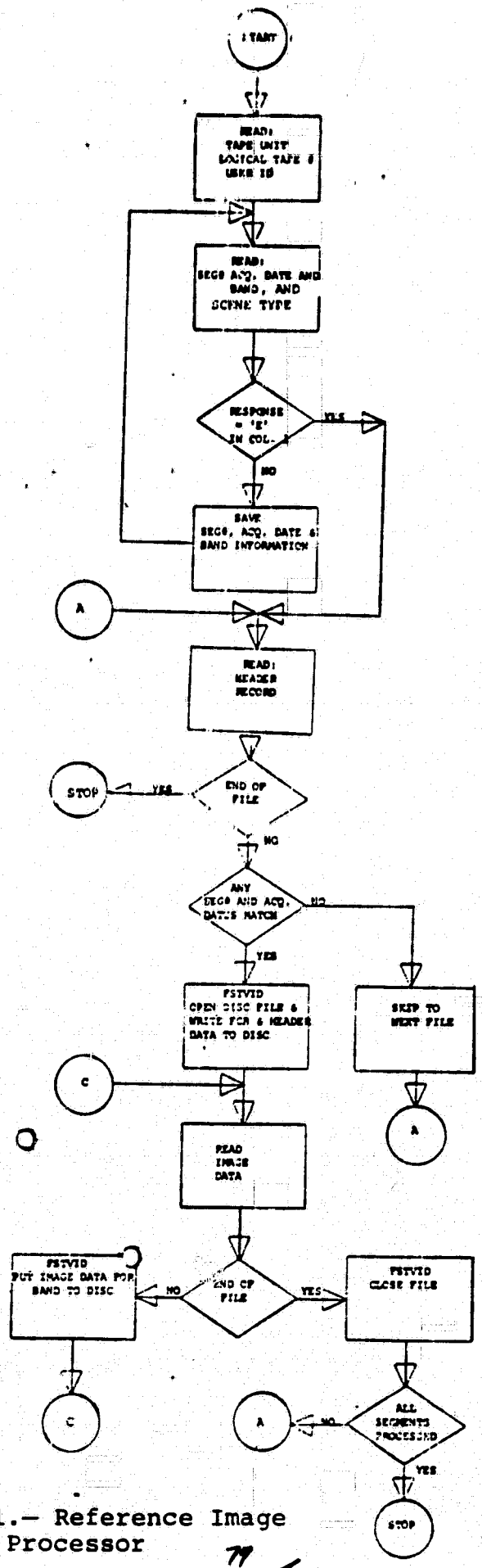

ORIGINAL PAGE IS
OF POOR QUALITY

C-2

Figure 5.5-1.— Reference Image Load Processor

5.6 GHIT PROCESSOR

This processor interprets the information on the Goddard High Density Inventory Tape (GHIT). It performs the following three functions:

- o Identifies the data to be processed from a set of HDT tapes based on the information contained on the GHIT tape and the PC&S data base;
- o Creates the Daily PC&S data base to contain the scene description data, the acquisition description data and area of interest descriptions to be used; and
- o Writes a report describing the high density tapes.

The processor consists of a main routine. GHIT (5.6.1), that calls the following subroutines:

GRDPRM - Read Parameters (5.6.2)

GINIT - GHIT Initialization (5.6.3)

WRTCM4 - Write Command File (5.6.4)

RDSCN - Read non-imagery data on scene (5.6.5)

SELAIS - Select Area of Interest (5.6.6)

SAVEAC - Save PC&S Acquisition Description (5.6.7)

SAVESC - Save PC&S Scene Description update (5.6.8)

In addition, this processor uses LIMS and PIP which along with the main program are executed in a batch run stream.

Communication within the program and subroutines in normally through the common blocks, SCENE, DBFILE, RECORD, SYSPRM, and GHIT, all of which are described in Table 5.6-1.

ORIGINAL PAGE IS
OF POOR QUALITY

		Set By:	Used By:
/SCENE/			
SCENNO	SCENE NUMBER	MAIL	SAVESC, SAVEAC
HDTID	HDTID	GINIT	SAVESC, SAVEAC
IMGID	IMAGE ID	RDSCN	SAVESC, SAVEAC
ACQDAT	ACQUITISION DATE	RDSCN	SAVESC, SAVEAC
REGPFL	REGENERATED PRODUCT FLAG	MAIN	SAVESC
WRSDES	WRS DESIGNATOR	RDSCN	SAVESC
WRSOFF	WRS OFFSET	RDSCN	SAVESC
MISSNO	MISSION NUMBER	RDSCN	SAVESC
RESTYP	RESAMPLING TYPE	RDSCN	SAVESC
QAGEOM	QUALITY ASSESSMENT OF GEOGRAPHICAL MODEL	RDSCN	SAVESC
FMTLAT	FORMAT CENTER LAT/DIRECTION	RDSCN	SAVESC
FMTLON	FORMAT CENTER LONG/DIRECTION	RDSCN	SAVESC
PLYBDR	PLAYBACK/DIRECT FLAG	RDSCN	SAVESC
ASCDES	ASCENDING/DESCENDING FLAG	RDSCN	SAVESC
SUNELA	SUN ELEVATION ANGLE	RDSCN	SAVESC
SUNAZA	SUN AZIMUTH	RDSCN	SAVESC
SCNCLA	SCENE CLOUD ASSESSMENT	MAIN	SAVESC
NOBNDS	NUMBER OF BANDS	MAIN	SAVESC, SAVEAC
DATGHI	DATE OF GHIT RUN	MAIN	SAVESC, SAVEAC
HDTPDT	HDT PROCESSED DATE	GINIT	SAVESC
IRIGB	IRIG BEGINNING TIME	MAIN	SAVESC
IRIGE	IRIG ENDING TIME	MAIN	SAVESC
/DBFILE/			
DBNAME	DATA BASE NAME WITH FILE NUMBER	GRDPRM	SELAIS
DDBNAM	DAILY DATA BASE NAME WITH FILE NUMBER	GRDPRM	SELAIS
TSK	TASK NAME	GRDPRM	SELAIS
/RECORD/			
HEADER	HEADER DATA FOR NON-IMAGERY FILE	GINIT	SAVEAC
ANNOT1	ANNOTATION RECORD BUFFER	GINIT	GINIT
/SYSPRM/			
MDBDDN	MASTER DATA BASE DISK NUMBER	GRDPRM	SELAIS
DSADDN	DAILY DATA BASE DISK NUMBER	GRMPRM	SELAIS
NOSAF	DAILY DATA BASE DISK NUMBER	GRMPRM	SELAIS, SAVEAC
/GHIT/			
GHITID	GHIT ID	GINIT	WRTCM4

TABLE 5.6-1 COMMON BLOCKS OF THE GHIT PROCESSOR

5.6.1 MAIN ROUTINE, PROGRAM GHIT

This is the main routine of the GHIT processor.

- Inputs

  GHIT tape.
  PC&S data base.

- Outputs

  PC&S data base updated to reflect the scene descriptions and the acquisition descriptions.
  High Density Tape Report written.

- Description

  GHIT reads records from the GHIT tape describing scenes (GHIT tape header, HDT directory, HDT header, HDT annotation and HDT trailer records). A description of each scene is added to the data base.

The scene's WRS row and path are compared with those of the primary and secondary scenes of all areas of interest in the PC&S data base. Acquisition descriptions and scene records are built for those matching areas of interest whose dates of acquisition fall within the acquisition start and stop dates, and these acquisition description and scene records are added to the PC&S data base update file.

Description

The constants are initialized using the LIVES parameter file. The GHIT tape records are read and the WRS designators on these records are used to select area of interest records from the master data base. These area of interest records, the acquisition description records constructed from these records and the scene records from the GHIT tape and the scene records are written as the daily data base.

o **Flow Chart**

Figure 5.6-1.

Common Blocks

/DBFILE/, /RECORD/, /SCENE/, /SYSPRM/

5.6.1 Program GHIT

o **Purpose**

(1) Read records from GHIT tape describing scenes (GHIT tape header, HDT directory, HDT reader, HDT annotation and HDT trailer records) and add a description of each scene to the data base if it contains the area of interest described in the LIVES master data base.

(2) For each of the scenes, find all areas of interest contained in the scene for which the scene date of acquisition falls within the area of interest acquisition start and stop dates.

(3) Add each of these areas of interest, its corresponding acquisition description record and its corresponding scene record to the PC&S data base.

o **Inputs**

GHIT tape
LIVES master data base
PC&S data base

o **Outputs**

PC&S data base updated to reflect the scene descriptions and the acquisition descriptions.

Processint Tape Order Report
Processing Activity Summary Report

This processor calls the following subroutines

GRDPRM	Read system parameters and initialize file names
GINIT	GHIT initialization from first three tape records
RDSCN	Read GHIT scene description
SELAIS	Select area of interest
SAVEAC	Save PC&S acquisition description
SAVESC	Save PC&S scene description

ORIGINAL PAGE IS
OF POOR QUALITY

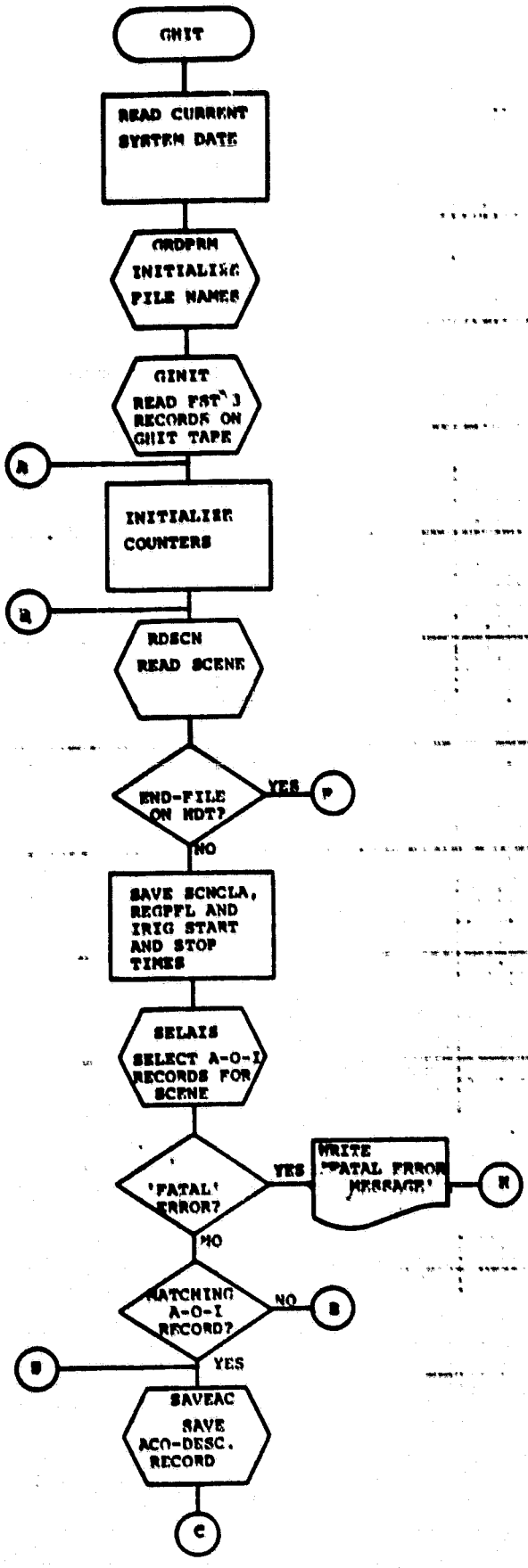

Figure 5.6-1
Flow of GHIT

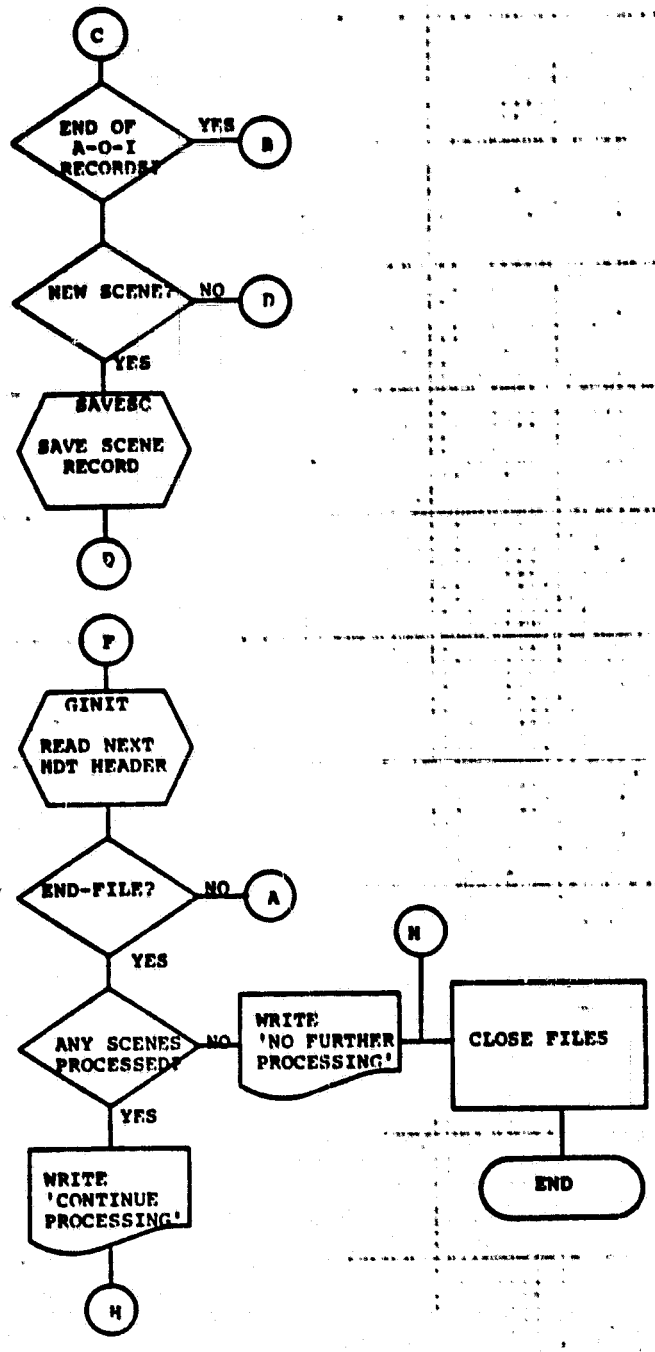

Figure 5.6-1 (Continued)

ORIGINAL PAGE IS
OF POOR QUALITY

o Subroutines Called

GRDPRM, GINIT, RDSCN, SELAIS, SAVEAC, SAVESC.

5.6.2 READ PARAMETERS, SUBROUTINE, GRDPRM (NOSAF)

This subroutine reads system parameter file and sets up file names, and saves the disk numbers for search area header files, the task name and the system default values.

- o Inputs

  System Parameter File - LIVESP.DAT

- o Outputs

  /DBFILE/
  DBNAME - LIVES master data base name
  DDBNAM - PCS daily data base name
  TSK - Test Name
  /SYSPRM/
  NOSAF - Disk number for search area files.

- o Description

  The system parameter file is read. The data base disk numbers are added to the data base names. The task name is moved to common. The disk number for the PCS daily data base is saved as the disk number for the search area files.

- o Subroutines Called

  CLOS$, OPEN$

5.6.3 GHIT INITIALIZATION SUBROUTINE, GINIT (KTHDTS, TRAILR, IEND)

GINIT reads the first two records on the GHIT tape and the first record of each HDT file.

- o Inputs

  GHIT record
  Calling sequence
  KTHDTS - Count of HDT's processed.

- Outputs

  /GHITID/
  GHITID - GHIT ID
  /SCENE/
  HDTID, REGPFL, HDTPDT, SCNCLA, IRIGB, IRIGE
  Calling Sequence
  TRAILR - IRIG beginning and ending times
  IEND - END of HDT's indicator

- Description

  The first entry to the GINIT causes the first two files on the GINIT tape to be read and checked. After these records are read and for every subsequent entry to GINIT the first HDT record is read.

- Subroutines Called

  ASNLUN, CLOS$, GETADR, OPEN$, WAITFR, WRTCM4, WTQIØ.

5.6.4 WRITE COMMAND FILE, SUBROUTINE, WRTCM4 (GHITID)

This subroutine writes the command file, GHIT.CM4.

- Inputs

  /GHIT/ GHITID - GHIT ID

- Outputs

  GHIT.CM4 Command file.

- Description

  The subroutine writes the command file to extract the data and print the Processing Tape Order and Processing Activity Summary Reports.

- Subroutines Called

  CLOS$, OPEN$.

5.6.5 READ NON-IMAGERY DATA ON SCENE, SUBROUTINE RDSCN

RDSCN reads the non-imagery data describing an HDT scene.

- o Input

  GHIT tape records.

- o Outputs

  /RECORD/
  HEADER - Array containing header and sun angle data

  /SCENE/ IMGID, ACQDAT, WRSDES, WRSOFF, MISSNO, RESTYP, QAGEOM, FMTLAT, FMTLON, PLYBDR, ASCDES, SUNELA, SUNAZA.

- o Description

  The header, annotation and trailer records are read and verified. The following items are extracted from the header record: IMGID, ASCDES, WRSDES, SENSID, MISSNO and ACQDAT. The FMTLAT, FMTLON, PLYBDR and SUN information are extracted from the annotation record.

- o Subroutines Called

  GETADR, WAITER, WTQIØ

5.6.6 SELECT THE AREAS OF INTEREST, SELAIS (WRSDES, USERID, ACQDAT)

SELAIS selects the areas of interest which are fully contained in the current scene and updates the PC&S data base with these areas.

- **Inputs**

  /SCENE/
  WRSDES - WRS indicator
  ACQDAT - Acquisition date

- **Outputs**

  Calling Sequence
  USERID User ID of first area extracted
  Updated PCS Data Base
  GHIT.RP1 Area of interest records selected

- **Description**

  This subroutine uses LIMS to select the areas of interest with the same WRS indicator as the current scene. If any areas are selected, the Daily PC&S Data Base is update to contain them.

- **Subroutines Called**

  CLOS$, EXCDMS, OPEN$, WAIT.

5.6.7 SAVE PC&S ACQUISITION DESCRIPTION UPDATES, SAVEAC (AOIID, NOSAF)

SAVEAC saves the data to update the daily PC&S data base by writing the acquisition description data to temporary files, and saves the data to update the acquisition description data in a temporary file to be used to update the Daily PC&S Data Base.

- o Inputs

  /SYSPRM/
  NOSAF - Disk number of non-image file
  GHIT.RP1 - Area of interest records selected
  /SCENE/ - scene common block
  /RECORD/
  HEADER - data for SAN file

- o Outputs

  Non-imagery file (.SAN file)
  Acquisition description record on GHIT.RP2
  AOIID - Area of interest ID or blanks

- o Description

  This subroutine reads one record from the GHIT.RP1 file and writes the corresponding acquisition - description record and writes the non-imagery file.

- o Subroutines Called

  CLOS$, OPEN$

5.6.8 SAVE SCENE UPDATES, SAVESC

SAVESC saves the data to update the PC&S Data Base by writing the scene description to a temporary file.

- Inputs

  Scene record data in common block /SCENE/

- Outputs

  Scene record.

- Description

  This subroutine writes the scene description record on file GHIT.DT3.

- Subroutine Called

  None.

5.6.9 BATCH RUNS STREAM, GHIT.BIS

o Input

1. The GHIT (supplied by user).
2. A tape drive identification card (supplied by operator).
3. A standard daily data base containing only predefined formats (resident on system disk).
4. Command files to direct LIMS (resident on system disk).
5. The system parameter file (resident on system disk).
6. A parameter file for the PACK program (resident on system disk).

o Output

1. A new daily data base on DB1 containing area of interest and and acquisition description records for every area of interest whose primary or secondary WRS row-path matched a scene description record for each scene which contained an area of interest.
2. A non-imagery-data file for each area of interest in the daily data base. The file is named nnmmmm.SAN, where nn is the user ID and mmmm is the area of interest ID.
3. A copy of the daily data base after it has been created and packed. This is for recovery usage.

o Description

This batch run stream is named GHIT.BIS. It resides on the system disk and calls the following modules:

System utility, PIP	
GHIT program	(5.6.1-5.6.8)
WAITR4 program	(5.6.10)
LIMS data base management system	(6.1)
PACK program	(5.6.11)

o Flow

The flow of this batch run stream is depicted in figure 5.6-2.

o Subroutines Called

See description above.

o Errors and Diagnostics

1. Those messages which come from individual programs.

2. 'ABO" IF FATAL ERROR MESSAGE - 'CON' OTHERWISE.

ORIGINAL PAGE IS
OF POOR QUALITY

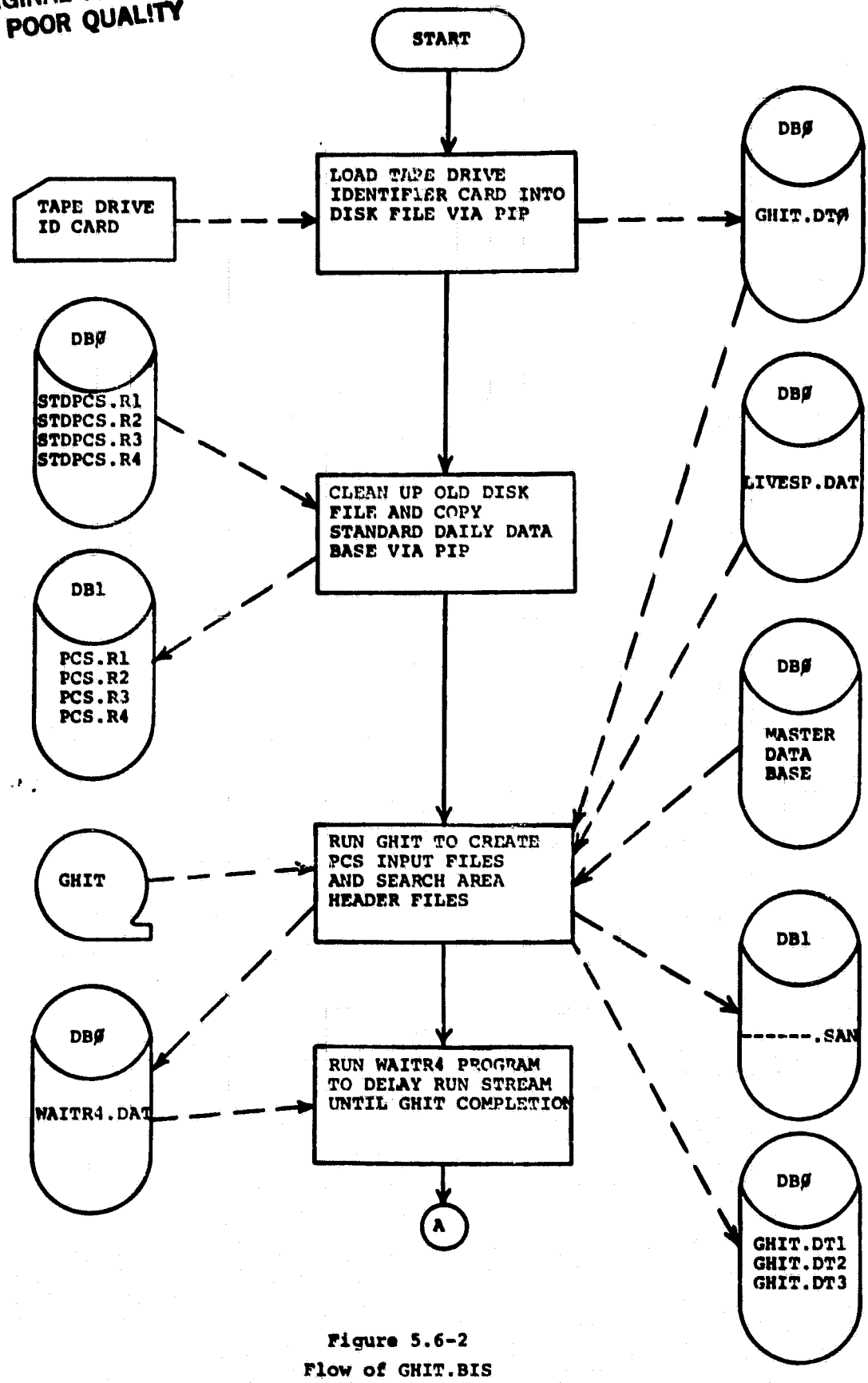

Figure 5.6-2
Flow of GHIT.BIS

ORIGINAL PAGE IS
OF POOR QUALITY

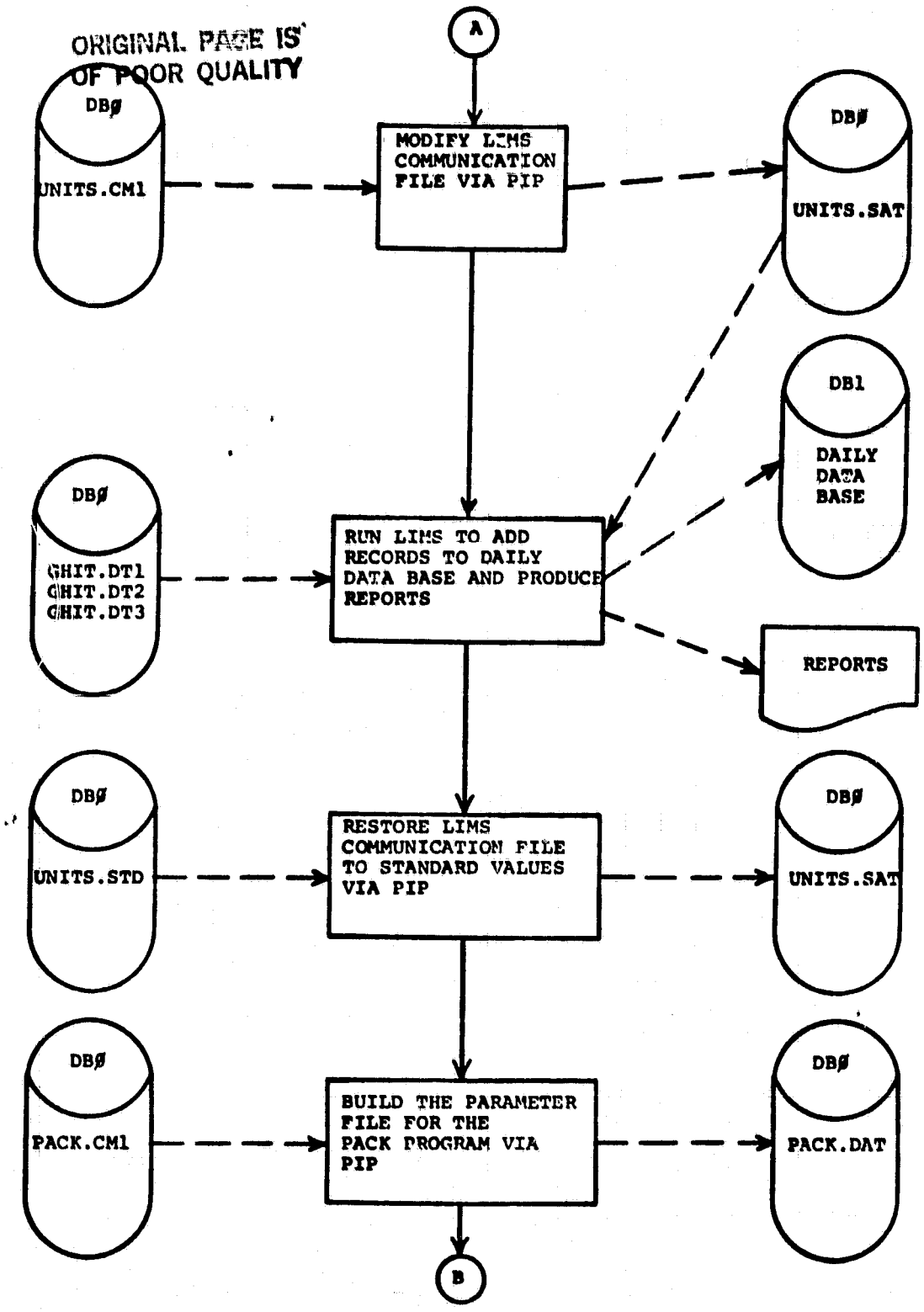

Figure 5.6-2 (continued)
Flow of GHIT.BIS

ORIGINAL PAGE IS
OF POOR QUALITY

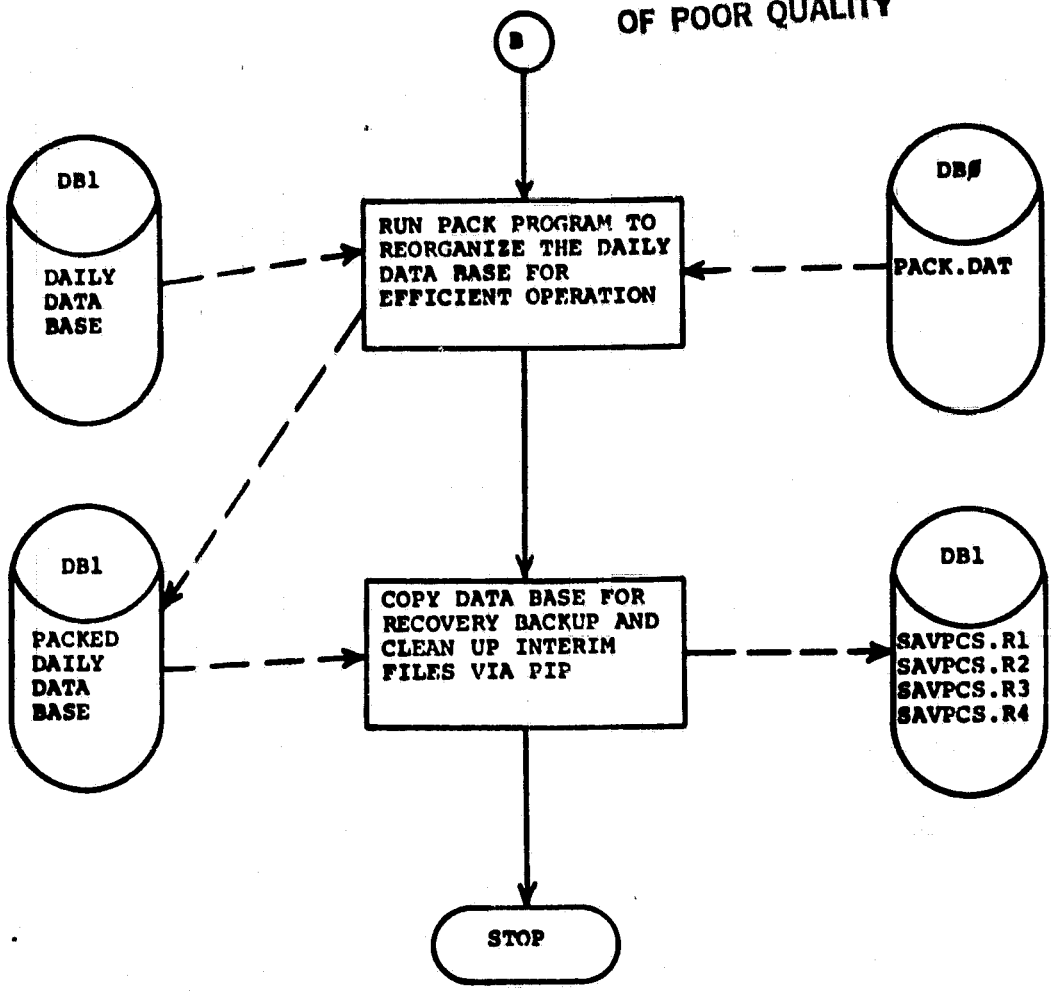

Figure 5.6-2 (concluded)
Flow of GHIT.BIS

5.6.10 BATCH RUNSTREAM DELAY PROGRAM, WAITR4

o Input

The trigger file, SY:WAITR4.DAT.

o Output

None

o Description

This program first waits two seconds, then goes into a loop where it attempts to assign the trigger file and upon failure, waits one second and goes back to the top of the loop. When successful assignment occurs, this program exits.

o Flow

The flow of this program is described in figure 5.6-3.

o Subroutines Called

No user subroutines are called.

o Errors and diagnostics

None

ORIGINAL PAGE IS
OF POOR QUALITY

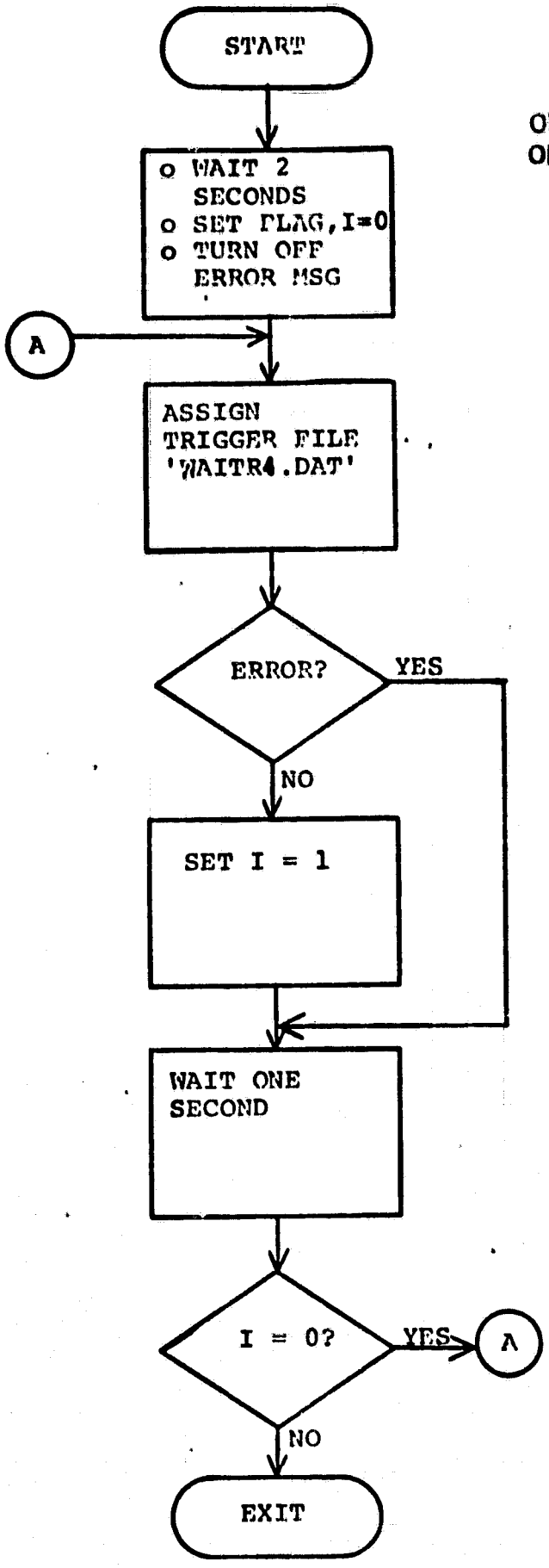

Figure 5.6-3
Flow of WAITR4 Program

5.6.11 LIMS DATA BASE REORGANIZATION PROGRAM, PACK

This program will delete unused printers and restore the pointer chain and its object records in physically sequential order in a LIMS data base.

o Input

1. The parameter file SY:PACK.DAT.
2. An old LIMS data base.

o Output

1. A new LIMS data base or portion thereof.
2. A printer report if errors occurred.

o Description

A LIMS data base (named ABC for example) consists of four permenent files named ABC.R1, ABC.R2, ABC.R3 and ABC.R4. The data base to be packed should be the highest version number of each of these files at the time this program is run. The output of this program will be new files of the same name but next higher version number. The program does not purge the older versions, but leaves that up to the user. The user has a choice of packing either the data records file (ABC.R1) and its index file (ABC.R2) or the key records file (ABC.R3) and its index file (ABC.R4) or both. The input parameters for this program are read from a file on the system disk named PACK.DAT (in the same UIC under which the program is executed). The contents of this file are as follows:

Record	Columns	Contents
1	1-29	Left-justified device (optional) and UIC (optional) and data base name (no file type or version).
2	1-6	Right-justified size (in 512-byte blocks) of the new .R1 file.

Record	Columns	Contents
	7-12	Ditto for new .R2 file.
	13-18	Ditto for new .R3 file.
	19-24	Ditto for new .R4 file.
3	1	Pack choice - one alpha character: D = data records and their index only K = key records and their index only B = both

o Flow

The flow of this program id depicted in figure 5.6-4.

o Subroutines Called

FLOPEN	(5.6.12)
PACK1	(5.6.13)
PACK2	(5.6.14)
PACK3	(5.6.15)
PACK4	(5.6.16)

o Errors and Diagnostics

1. ***PACK ERROR - ON PACK.DAT FILE: ***
   (listing of PACK.DAT)

   This message will occur if the file name is longer than 29 characters, on the pack choice character is not a 'D', 'K', or 'B'.

2. ***PACK ERROR - ON OLD FILE: ***
   (name of old data base file)

   This message will occur if the program cannot open the old data base file for any reason.

3. ***PACK ERROR - ON NEW FILE: ***
   (name of new data base file)

   This message will occur if the program cannot create the new data base file for any reason.

ORIGINAL PAGE IS
OF POOR QUALITY

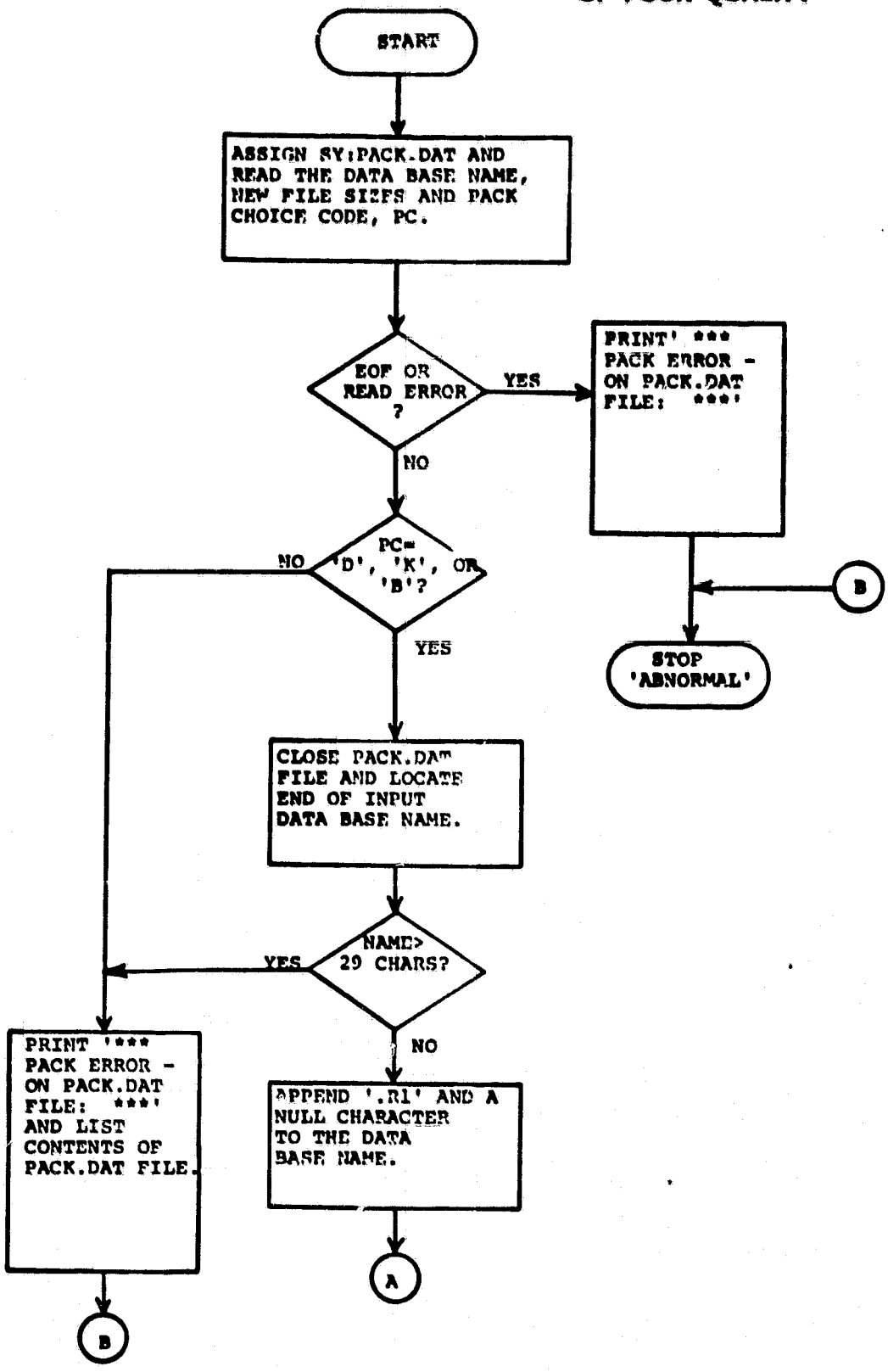

Figure 5.6-4
Flow of Pack Program

ORIGINAL PAGE IS
OF POOR QUALITY

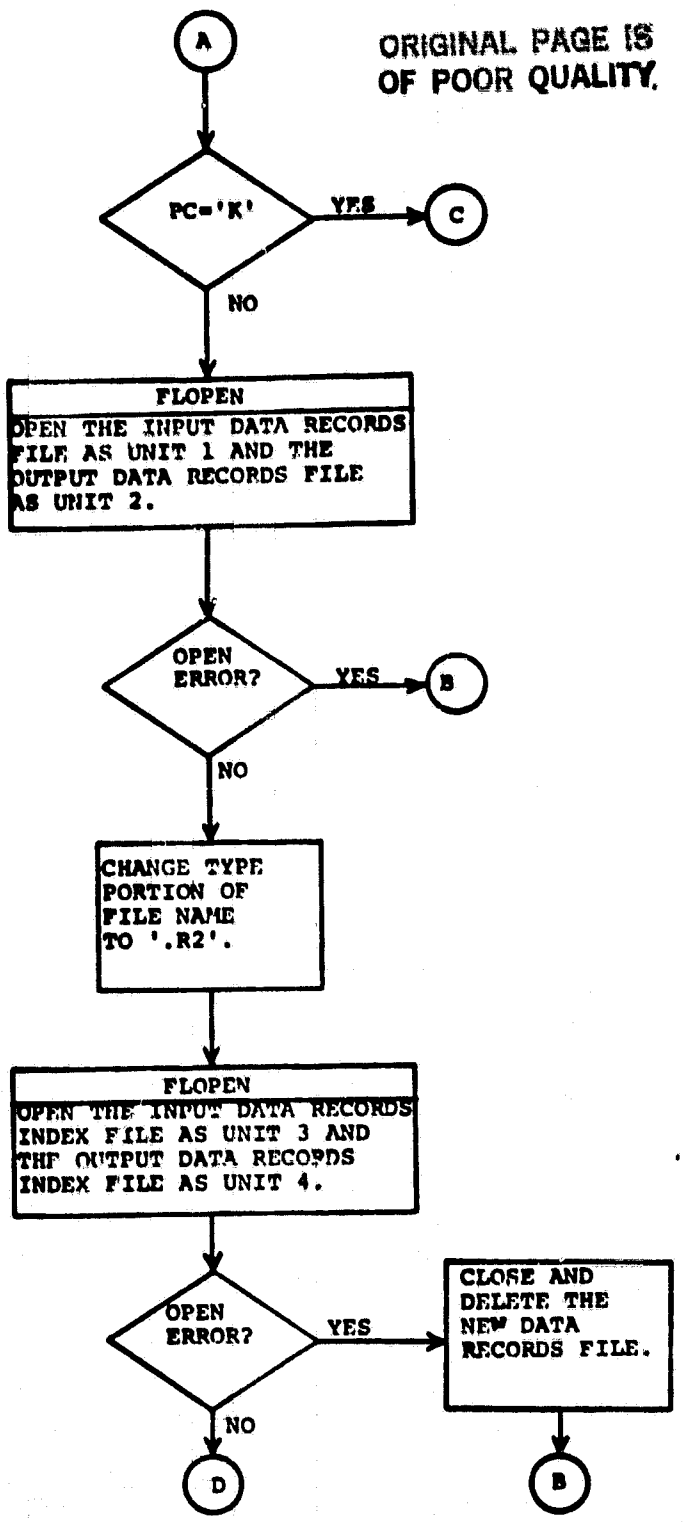

Figure 5.6-4 (Continued)
Flow of Pack Program

ORIGINAL PAGE IS
OF POOR QUALITY

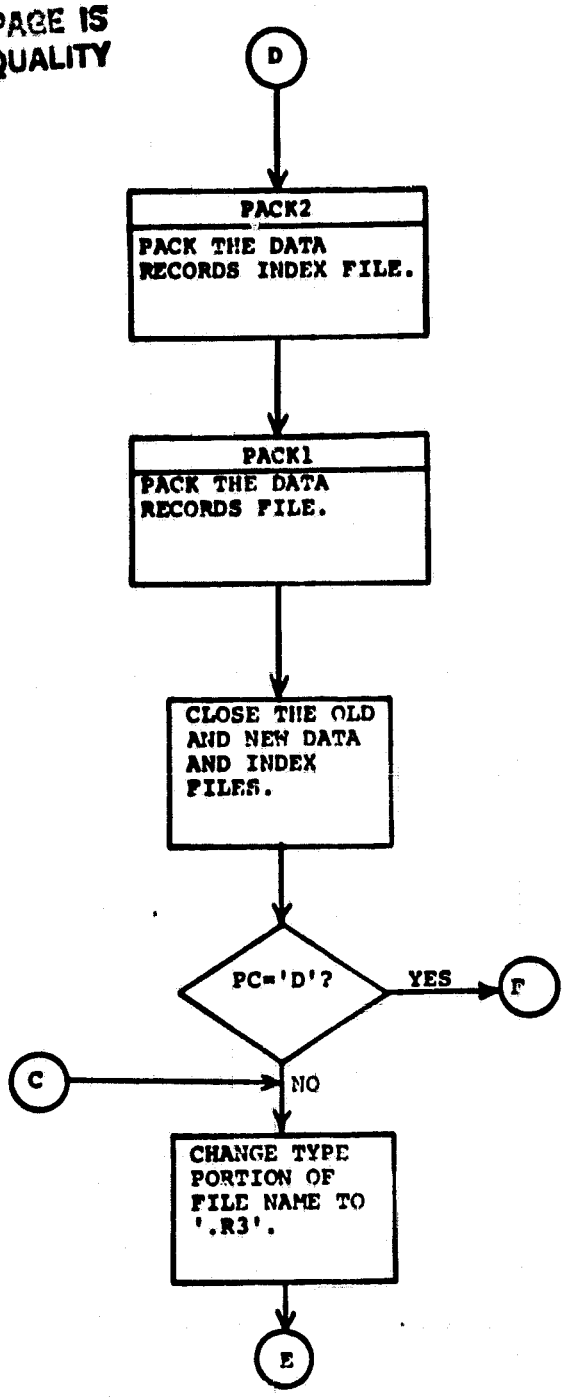

Figure 5.6-4 (continued)
Flow of Pack Program

ORIGINAL PAGE IS
OF POOR QUALITY

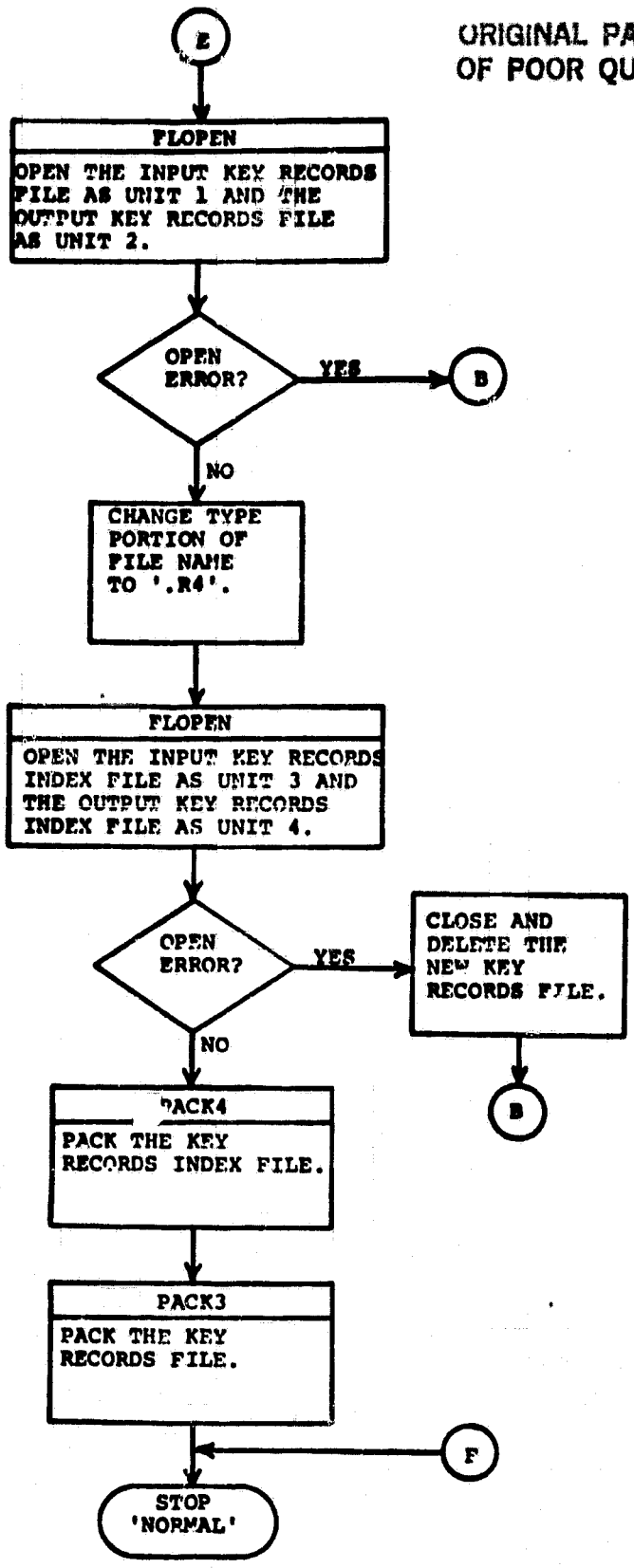

Figure 5.6-4 (concluded)
Flow of Pack Program

5.6.12 FILE OPENING SUBROUTINE, FLOPEN

o Input

1. Integer *4 unit number to use for existing file.
2. Integer *4 unit number to use for new file.
3. Byte array containing file name including type and null terminate.
4. Integer *4 number of blocks (512-byte disk blocks) to allocate to the new file.
5. Integer *4 number of characters in the file name including the type.

o Output

1. Integer *4 error return variable where
   0 means no error occurred.
   1 means error on open of old file.
   2 means error on open of new file.

o Description

This subroutine opens the existing LIMS data base file and creates a corresponding new file of the specified size, performing a write into each allocated block.

o Flow

The flow of this subroutine is depicted in figure 5.6-5.

ORIGINAL PAGE IS
OF POOR QUALITY

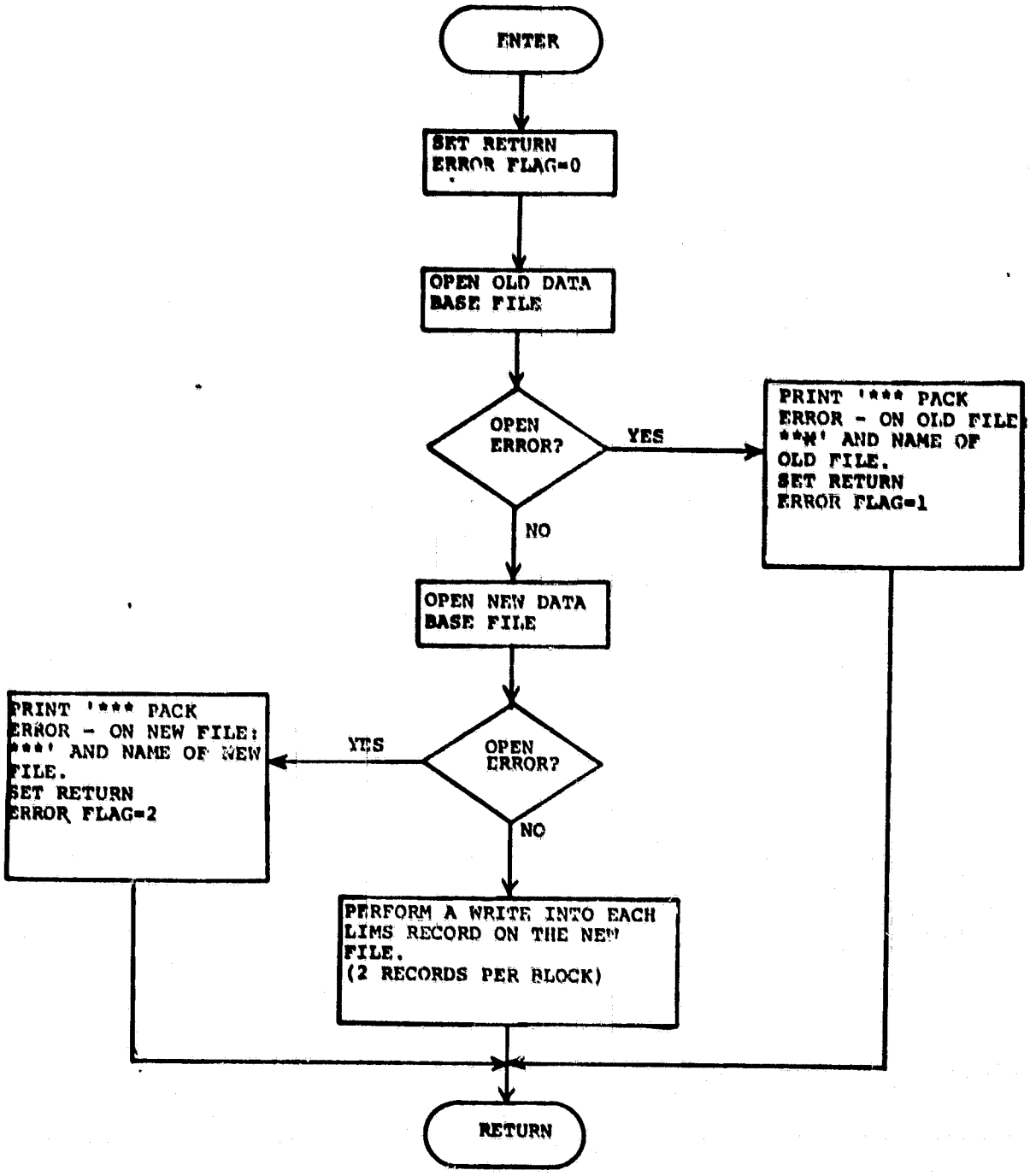

Figure 5.6-5
Flow of FLOPEN Subroutine

o Subroutines Called

No user subroutines are called.

o Errors and Diagnostics

1. ***PACK ERROR - ON OLD FILE: ***
   (name of old data base file)

   This message will occur if the program cannot open the old data base file for any reason.

2. ***PACK ERROR - ON NEW FILE: ***
   (name of new data base file)

   This message will occur if the program cannot open the new data base file for any reason.

5.6.13 DATA RECORDS COMPRESSOR SUBROUTINE, PACK1

o Input

1. Integer *4 unit number of old data records file.
2. Integer *4 unit number of new data records file
3. Integer *4 number of new data records index file.

o Output

None

o Description

This subroutine retrieves each existing data record in order from the old file and stores it sequentially on the new file, updating the next-available-location pointer and the new data records index file.

o Flow

The flow of this subroutine is depicted in Figure 5.6-6. The first word of a file is word zero.

o Subroutines called

This subroutine used the LIMS' subroutines GET, PUT, and CLOSEP.

o Errors and Diagnostics

None

ORIGINAL PAGE IS
OF POOR QUALITY

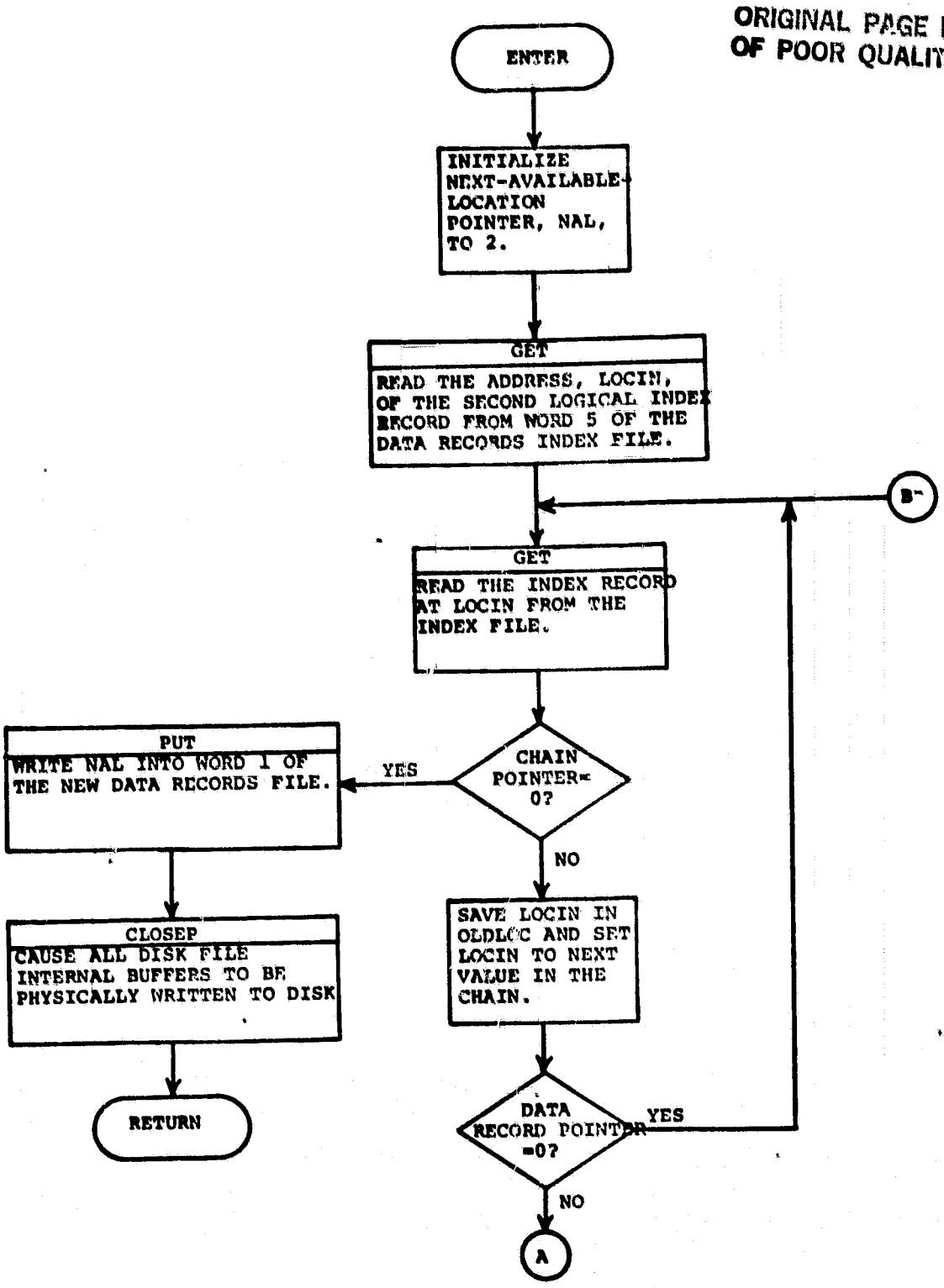

Figure 5.6-6
Flow of PACK1 Subroutine

ORIGINAL PAGE IS
OF POOR QUALITY

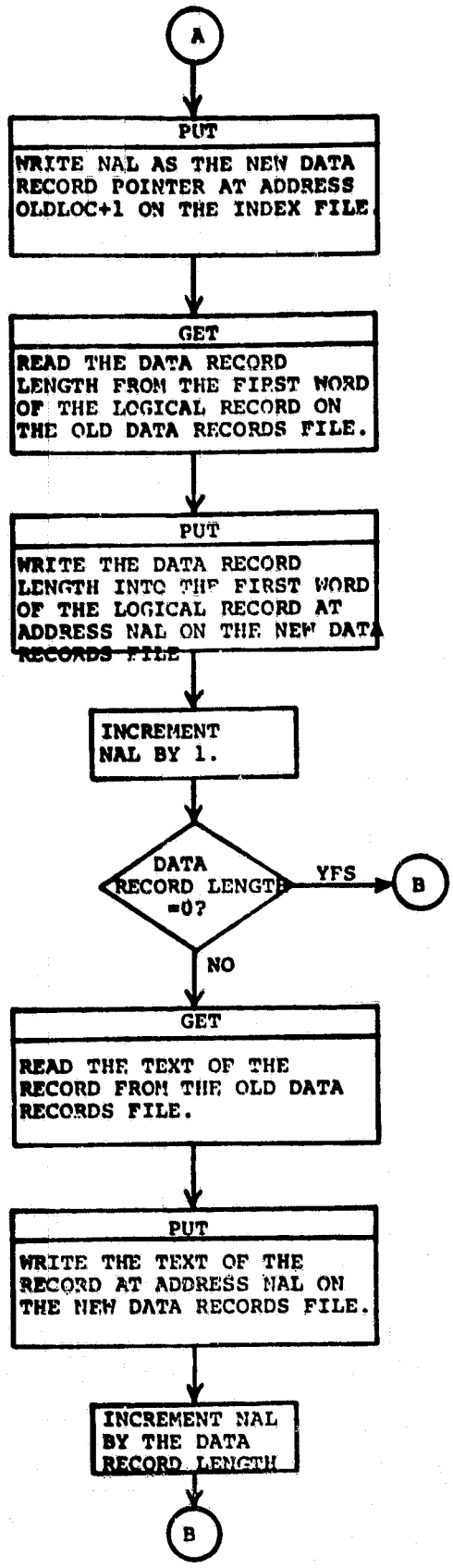

Figure 5.6-6 (Concluded)
Flow of PACK1 Subroutine

5.6.14 DATA RECORDS INDEX COMPRESSOR SUBROUTINE, PACK2

o Input

1. Integer *4 unit number of old index file.
2. Integer *4 unit number of new index file.

o Output

None

o Description

This subroutine retrieves each index record from the old file and, if it points to an existing data record, stores it sequentially on the new file, updating the next-available-location pointer and the number of index records counter.

o Flow

The flow of this subroutine is depicted in figure 5.6-7. The first word of a file is word zero.

o Subroutines Called

This subroutine uses the LIMS subroutines GET, PUT, and CLOSEP.

o Errors and Diagnostics

None

ORIGINAL PAGE IS
OF POOR QUALITY

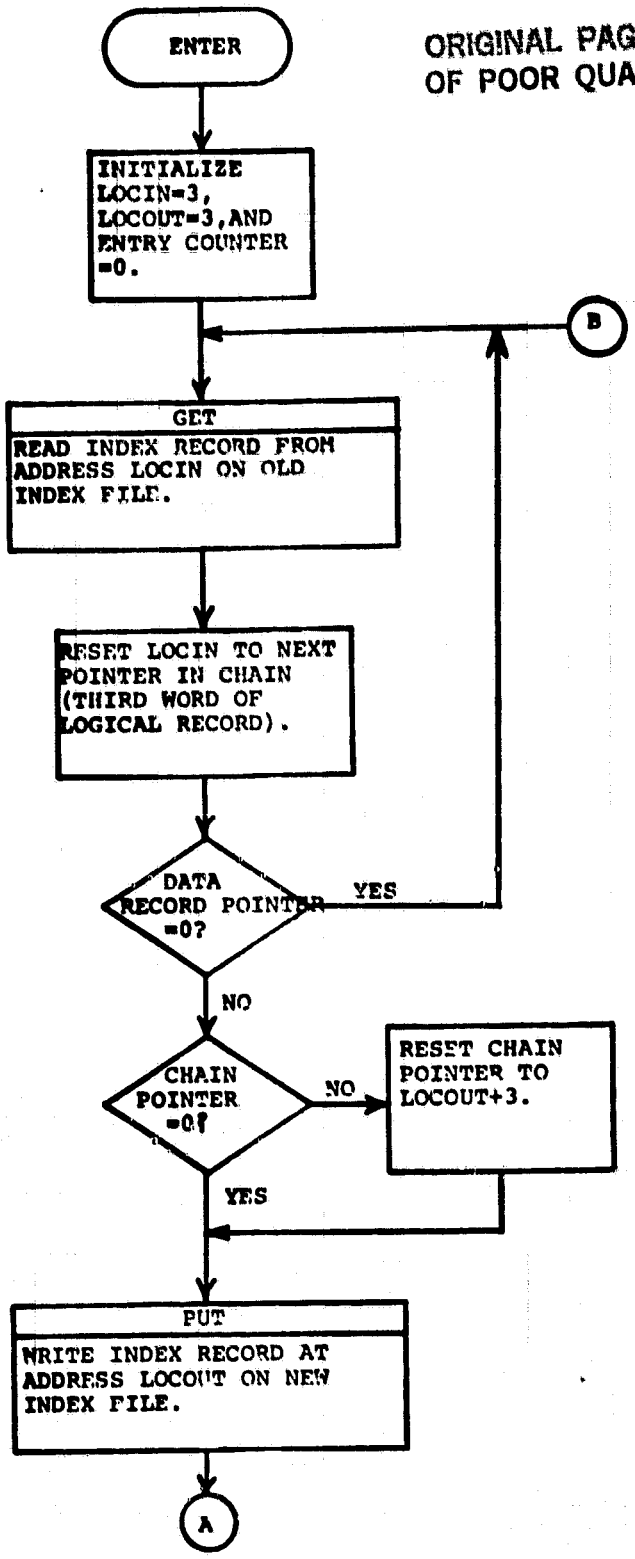

Figure 5.6-7
Flow of PACK2 Subroutine

ORIGINAL PAGE IS
OF POOR QUALITY

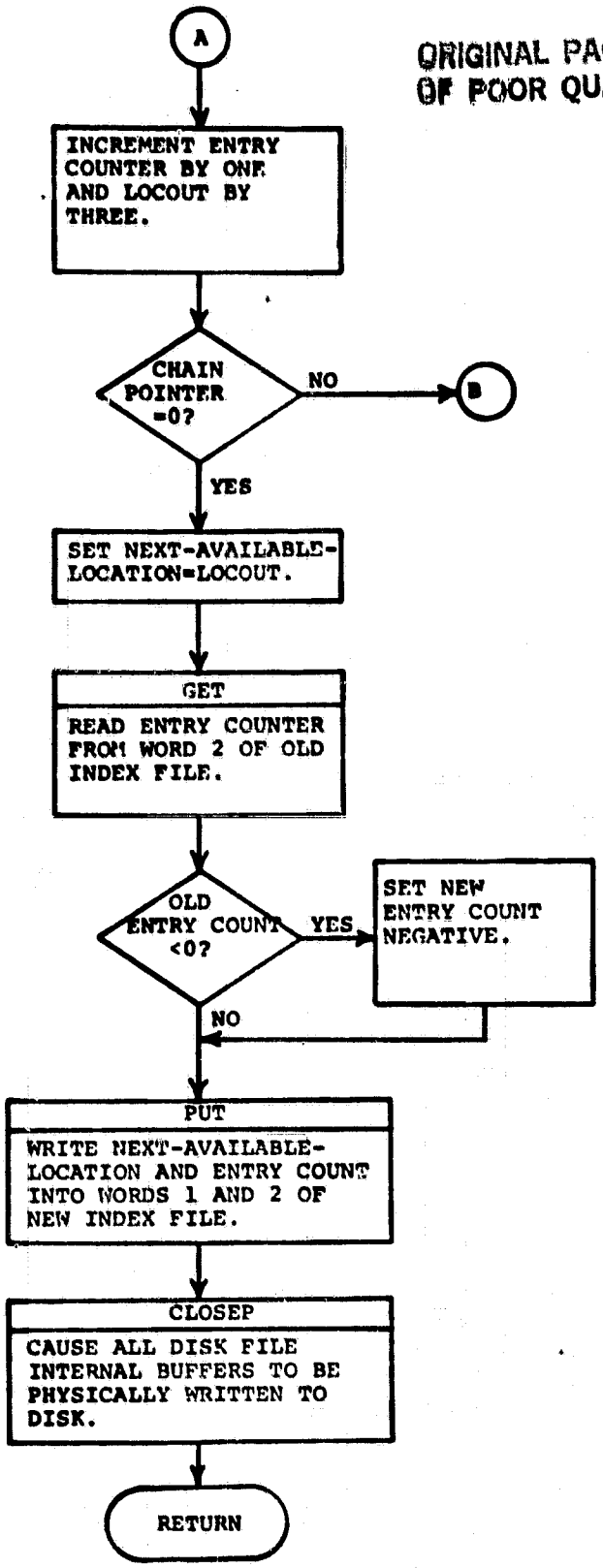

Figure 5.6-7 (concluded)
Flow of PACK2 Subroutine

5.6.15 KEY RECORDS COMPRESSOR SUBROUTINE, PACK3

o Input

1. Integer *4 unit number of old key records file.
2. Integer *4 unit number of new key records file.
3. Integer *4 unit number of new key records file.

o Output

None

o Description

This subroutine retrieves each existing key record in order from the old file and stores it sequentially on the new file, adjusting its size if necessary and updating the next-available-location pointer and the new key records index file.

o Flow

The flow of this subroutine is depicted in figure 5.6-8. The first word of a file is word zero.

o Subroutines Called

This subroutine uses the LIMS subroutines GET, PUT, and CLOSEP.

o Errors and Diagnostics

None

ORIGINAL PAGE IS
OF POOR QUALITY

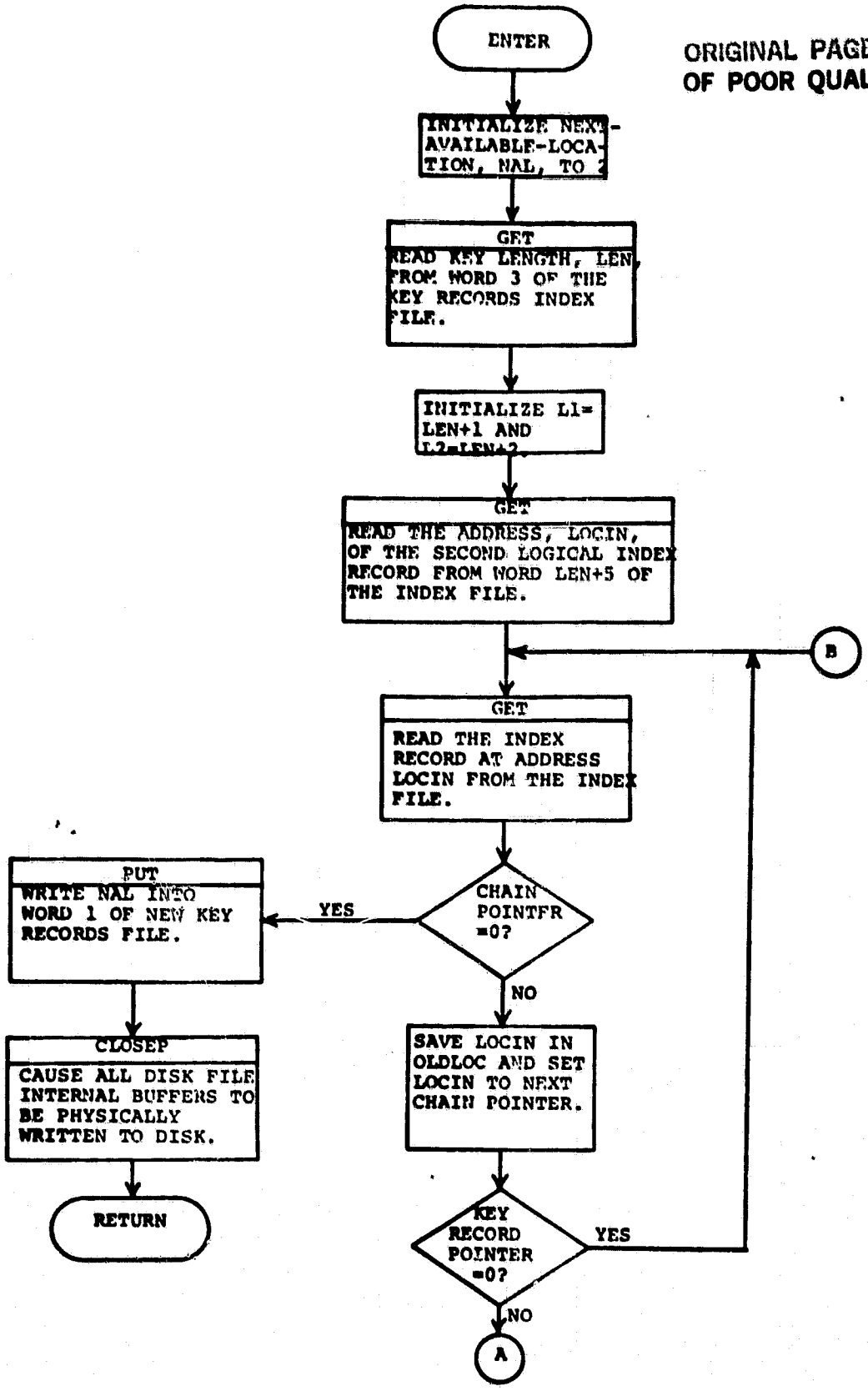

Figure 5.6-8
Flow of PACK3 Subroutine

ORIGINAL PAGE IS
OF POOR QUALITY

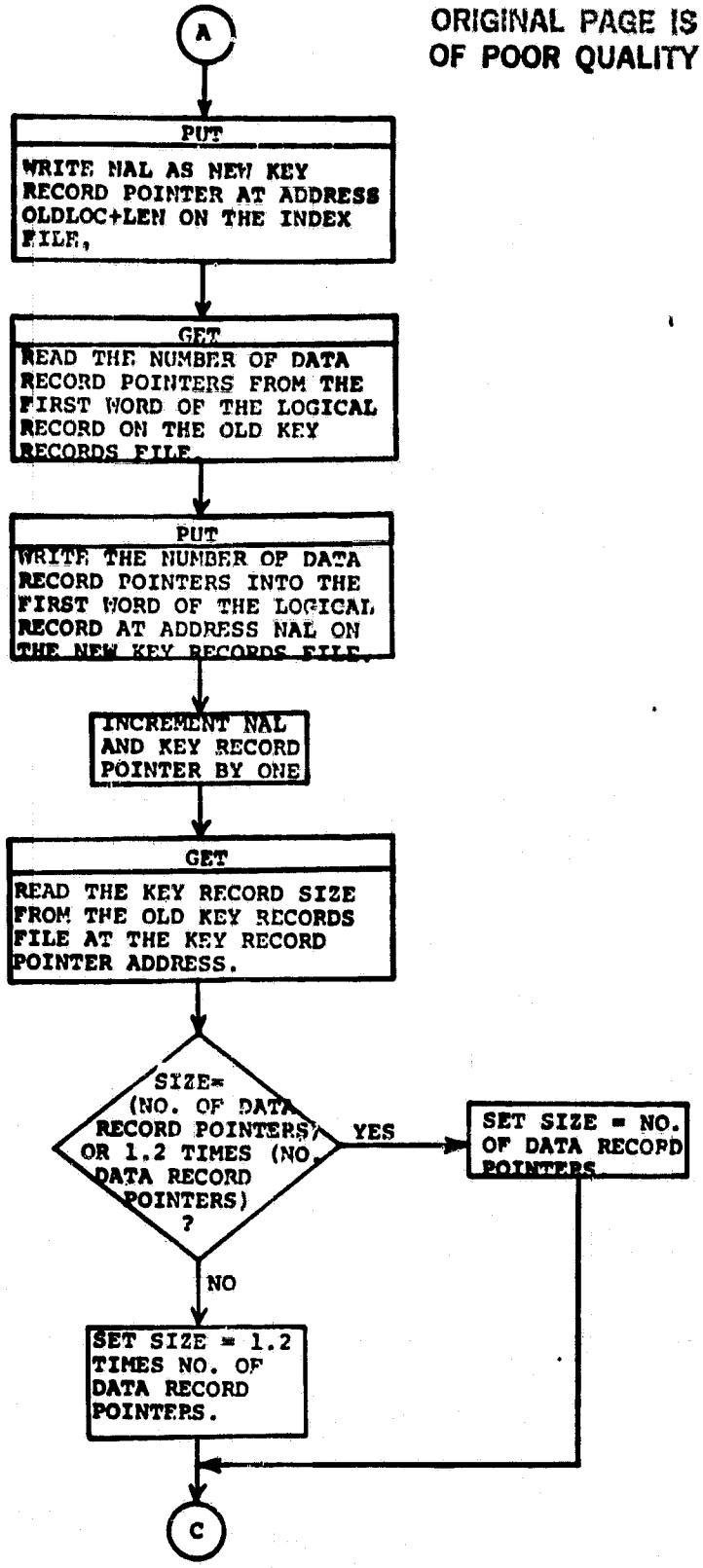

Figure 5.6-8 (continued)
Flow of PACK3 Subroutine

ORIGINAL PAGE IS
OF POOR QUALITY

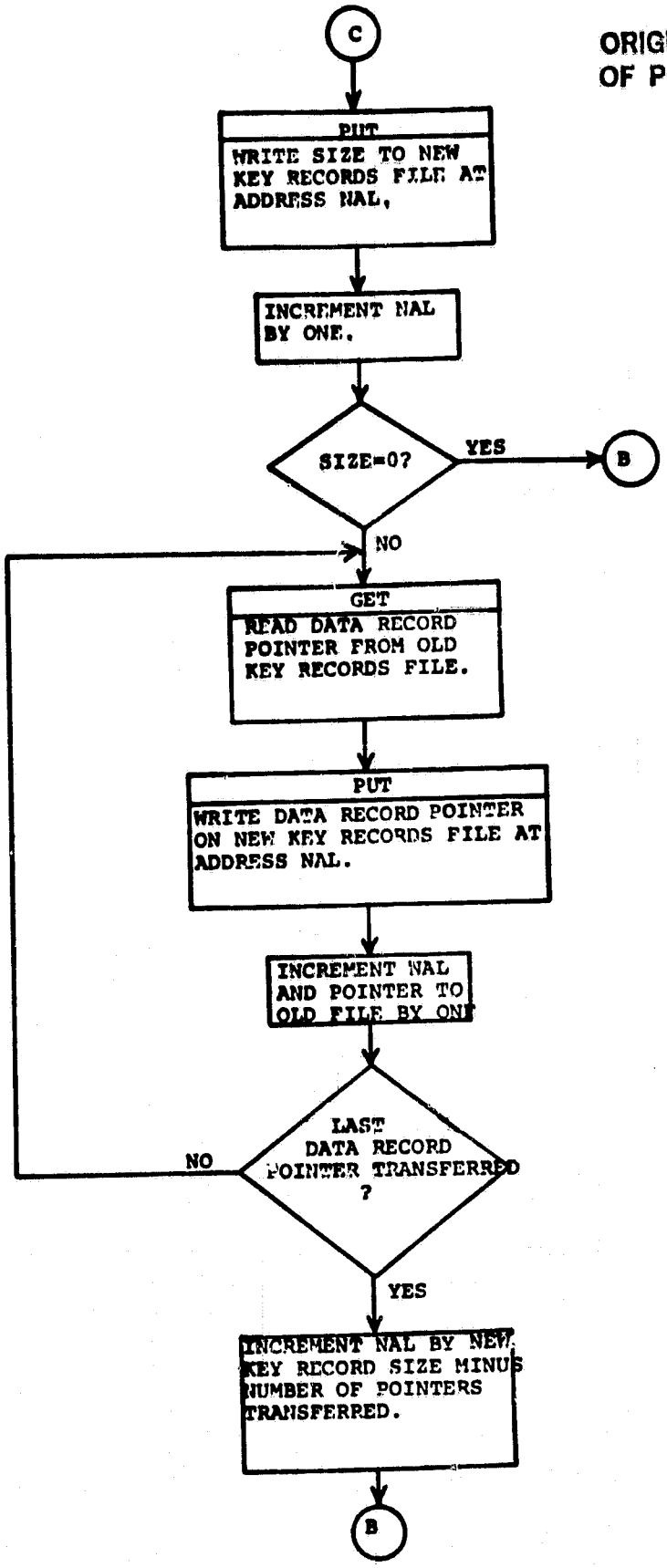

Figure 5.6-8 (Concluded)
Flow of PACK3 Subroutine

5.6.16 KEY RECORDS INDEX COMPRESSOR SUBROUTINE, PACK4

o Input

1. Integer *4 unit number of old index file.
2. Integer *4 unit number of new index file.

o Output

None

o Description

This subroutine retrieves each index record from the old file and, if it points to an existing key record, stores it sequentially on the new file, updating the next-available-location pointer and the number of index records counter.

o Flow

The flow of this subroutine is depicted in figure 5.6-9. The first word of a file is word zero.

o Subroutines Called

This subroutine uses the LIMS subroutines GET, PUT, and CLOSEP.

o Errors and Diagnostics

None

ORIGINAL PAGE IS
OF POOR QUALITY

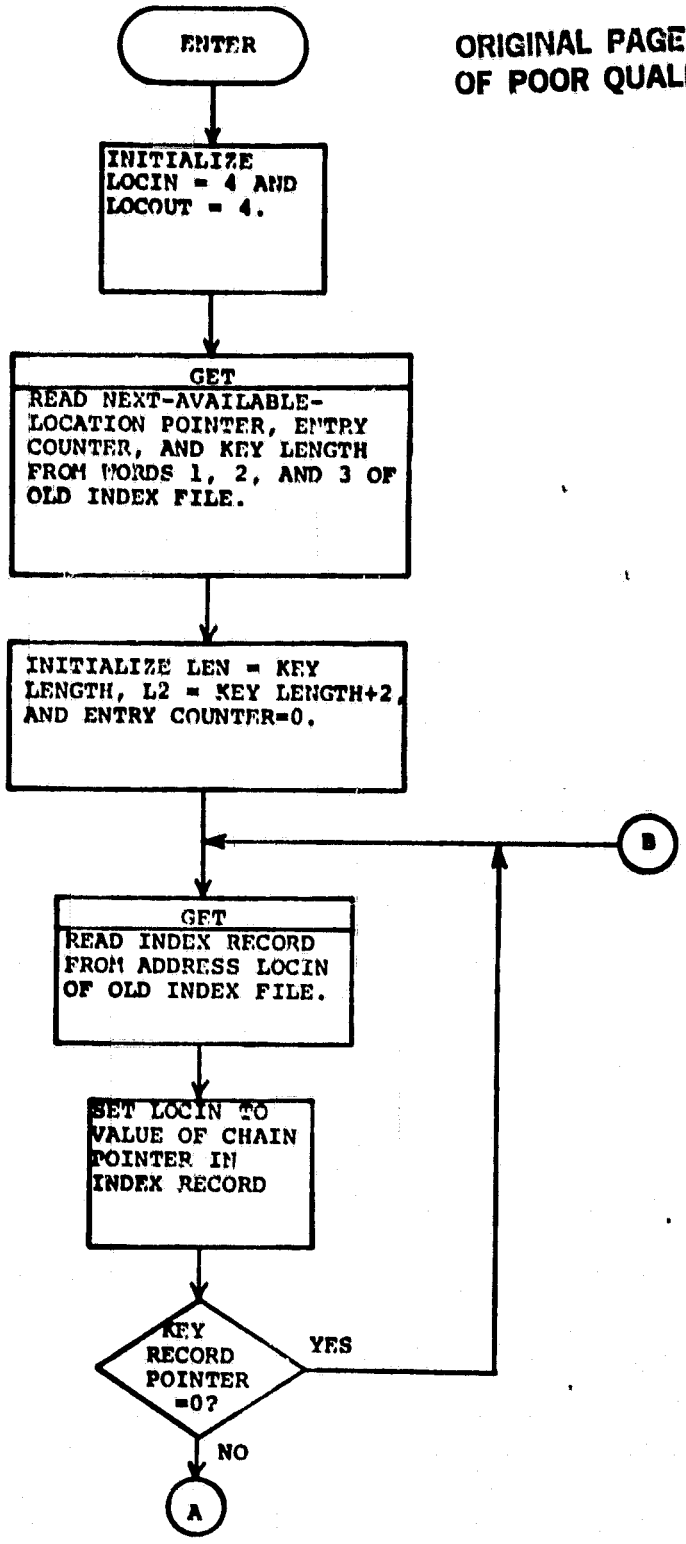

Figure 5.6-9
Flow of PACK4 Subroutine

ORIGINAL PAGE IS
OF POOR QUALITY

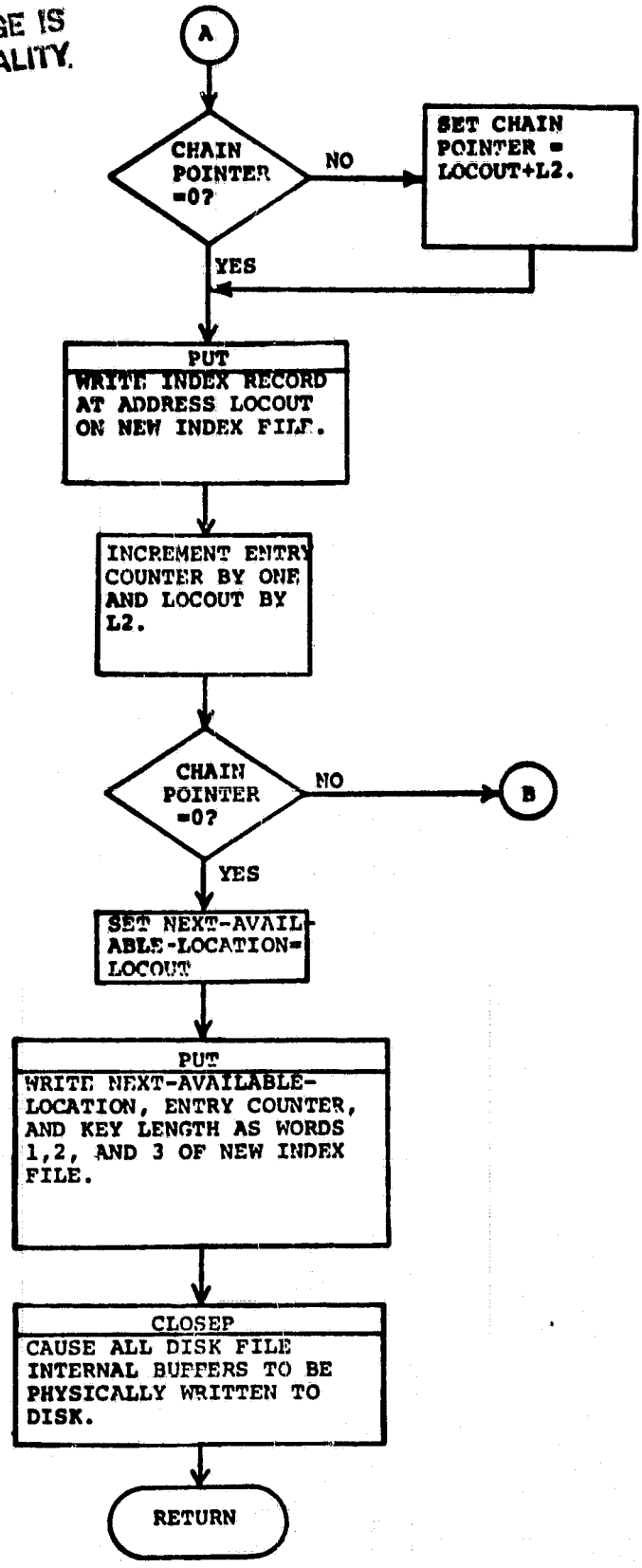

Figure 5.6-9 (Concluded)
Flow of PACK4 Subroutine

5.7 EXTRACT PROCESSOR

The extract processor retrieves pixel lines and their associated data from the full scene data base and places them as area of interest files or search area files on the search area data base.

It consists of a main program EXTRCT (5.7.1), which calls the following subroutines:

RDTOC	Read Table of Contents	(5.7.2)
CKSTDK	Check status of disk	(5.7.3)
RDDSK	Read disk	(5.7.4)
RFSPRM	Read full scene parameters	(5.7.5)
PINIT	Parameter initialization	(5.7.6)
RDACQD	Read an acquisition - description record	(5.7.7)
RDAOI	Read area of interest	(5.7.8)
RDSCEN	Read scene description	(5.7.9)
CCPIXL	Compute corner pixel	(5.7.10)
TMECTR	Transform latitude and longitude	(5.7.11)
WRTIHD	Write image file header	(5.7.12)
GETLNP	Get lines of pixels	(5.7.13)
WRTBUF	Write imagery buffer	(5.7.14)
UPDADR	Write update record	(5.7.15)
UPDPCS	Update PCS data base	(5.7.16)

Communications are made through common blocks (Table 5.7-1).

5.7.1 MAIN PROGRAM, EXTRCT

This is the main routine of the extraction processor.

o Inputs

System Parameter File. Full Scene Data Base

o Outputs

Area of Interest File on Search Area Data Base, Search Area File on Search Area Data Base, HDT Tape Record.

o Description

A list of areas of interest is retrieved from the PC&S data base. This list is sorted for processing the files on the full scene data base.

/ADAI/		Set by:	Need by:
USERID	User ID	RDACQD	UPDADR
SCENNO	Scene Number	RDACQD	UPDADR
AOIID	Area of Interest ID	RDACQD	UPDADR
ADAIUN	Not used		
SATYPE	Not used		
PREGRS	Preprocessing Reject Reason	MAIN	UPDADR
SCRREG	Screening and Registration	MAIN	UPDADR
SACLDA	Scene Cloud Cover	MAIN	UPDADR
PRMSCN	Primary, Secondary	RDAOI	UPDADR
/AI/			
AOIID1	Area of Interest Number	RADOI	
USRID1	User ID	RDAOI	
AILNES	Number of lines	RDAOI	GETLNP,CCPIXL
AIPXLS	Number of pixels	RDAOI	GETLNP,CCPIXL
AILAT	Latitude	RDAOI	CCPIXL
AILONG	Longitude	RDAOI	CCPIXL
BNREQE	Band Numbers Required for Extraction	RDAOI	GETLNP
BNDSEX	Bands Extracted	GETLNP,MAIN	GETLNP,UPDADR
REGQTR	Registration Quality-Reject	RDAOI	MAIN
REGQTS	Registration Quality-Screen	RDAOI	MAIN
/FILES/			
TFILE	Transaction File Name	RFSPRM	UPDADR
DBNAME	Daily Data Base Name	RFSPRM	PINIT
TSK	Task Name	RFSPRM	PINIT
DDBNAM	Daily Data Base Name	RFSPRM	
NOSAF	Search Area Disk Number	RFSPRM	MAIN
METHOD	Disk Selection Method	RFSPRM	RDTOC
/LINE/			
LINE	Lines of Pixels	GETLNP	WRTBUF
/SCENE/			
SCNNUM	Scene Number	RDSCEN	
HDTID	HDT ID	RDSCEN	
ACQDAT	Acquisition Date	RDSCEN	
REGPFL	Regenerated Product Flag	RDSCEN	
WRSDES	WRS Designator	RDSCEN	
WRSOFF	WRS Offset	RDSCEN	CCPIXL
MISSNO	Mission Number	RDSCEN	
RESTYP	Resampling Type		
QAGEOM	Quality Assessment of Geographical Model	RDSCEN	MAIN
FMTLAT	Format Center Lat/Direction	RDSCEN	CCPIXL
FMTLON	Format Center Lon/Direction	RDSCEN	CCPIXL
PLYBDR	Playback/Direct Flag	RDSCEN	
ASCDES	Ascending/Descending Flag	RDSCEN	
SUNELA	Sun Elevation Angle	RDSCEN	
SUNAZA	Sun Azimuth	RDSCEN	
DATIGHI	Date GHIT Run	RDSCEN	
HDTPDT	HDT Processed Date	RDSCEN	
IRIGB	IRIG Beginning Time	RDSCEN	
IRIGE	IRIG Ending Time	RDSCEN	
SCNCLA	Scene Cloud Assessment	RDSCEN	
/SYSPRM/			
FFRMSZ	Full Frame Pixels	RFSPRM	GETLNP,CCPIXL
FFRMLS	Full Frame Lines	RFSPRM	GETLNP,CCPIXL
CLDTV	Cloud Threshold Value	Not used	
PCVECC	Percent for Excessive Cloud Cover	Not used	
NOPXAD	Default number of pixels to add	RFSPRM	GETLNP,WRTIHD
NOLNAD	Default number of lines to add	RFSPRM	GETLNP,WRITHD
DNOLNE	Default Area of Interest Number Lines	RFSPRM	RDAOI
DNOPXL	Default Area of Interest Number Pixels	RFSPRM	RDAOI
SREGQS	System Registration Quality-Screen	RFSPRM	RDAOI
SREGQR	System Registration Quality-Reject	RFSPRM	RDAOI
MDBDDN	Master Data Base Disk Drive Number	Not Used	RDAOI
DSADDN	Daily Data Base Disk Drive Number	RFSPRM	MAIN
DISKAD	Reference Image Disk Block Number	RFSPRM	GETLNP

Table 5.7-1

Common blocks of the Extract Processor

ORIGINAL PAGE IS OF POOR QUALITY

For each area of interest, the area of interest description and the acquisition description record for the area of interest are retrieved from the PC&S data base. The registration quality threshold - screen (REGQTS) and the registration quality threshold - reject (REGQTR) are included in this area of interest description.

The acquisition description record for the area of interest contains the scene number which is used to retrieve the scene description record. This record contains the quality assessment of geographical model (QAGEOM) for the scene.

If the QAGEOM is greater than the REGQTS, the area of interest is extracted and written as an area of interest file on the search area data base. If the QAGEOM is greater than the REGQTR, and less than or equal to the REGQTS, the area of interest plus a border of additional data is extracted and written as a search area file on the search area data base. If the QAGEOM is less than or equal to the REGQTR, the area of interest is not processed.

Subroutines are used to assign the full scene file name and move lines of pixels and their associated data from the full scene data base to the search area data base file whose name is constructed using the name of the area of interest.

The PC&S data base is updated to reflect whether or not the pixel data was extracted for the area of interest. The HDT tape report is written.

o <u>Inputs</u>

System Parameter File, PCS Data Base, Full Scene Data Base.

o <u>Outputs</u>

SAI Files (imagery files)

o <u>Description</u>

The unprocessed acquisition-description records are selected

and matching area of interest and scene records are extracted. The acquisition-description records are then processed serially. If a matching scene is found on a disk, an imagery file is built. If no matching scene is found, an error message is written. The PC&S daily data base is updated to reflect the records processed.

- Flow Chart

  See Figure 5.7-1

- Subroutines called

  CCPIXL, GETLNP, PINIT, RDACQD, PDAOI, RDSCEN, RDTOC, RFSPRM, UPDADR, UPDPCS, WRTIHD.

5.7.2 READ TABLE OF CONTENTS SUBROUTINE, RDTOC (METHOD)

This subroutine reads the Table of Contents from 1) the disk as soon as the disk-ready signal is received from the HDTRS system or 2) alternately from the disk specified in the LIVES.DAT input file and passed in the parameter METHOD.

- Inputs

  METHOD - 0 - Use disk 0 immediately
  1 - Use disk 1 immediately
  Any other character - Use either disk when ready signal is received from the HDTRS system.

- Outputs

  IWRSDK - WRS designators for scenes on disk

- Description

  If disk was previously attached, release it. Call subroutine to check the current status of the disks (CKSTDK). If METHOD is 0 or 1, set unit to read appropriate disk, otherwise wait for disk ready signal. Read Table of Contents from disk and form table. Return to calling routine. Set first entry in table to 9's if end of processing.

ORIGINAL PAGE IS
OF POOR QUALITY

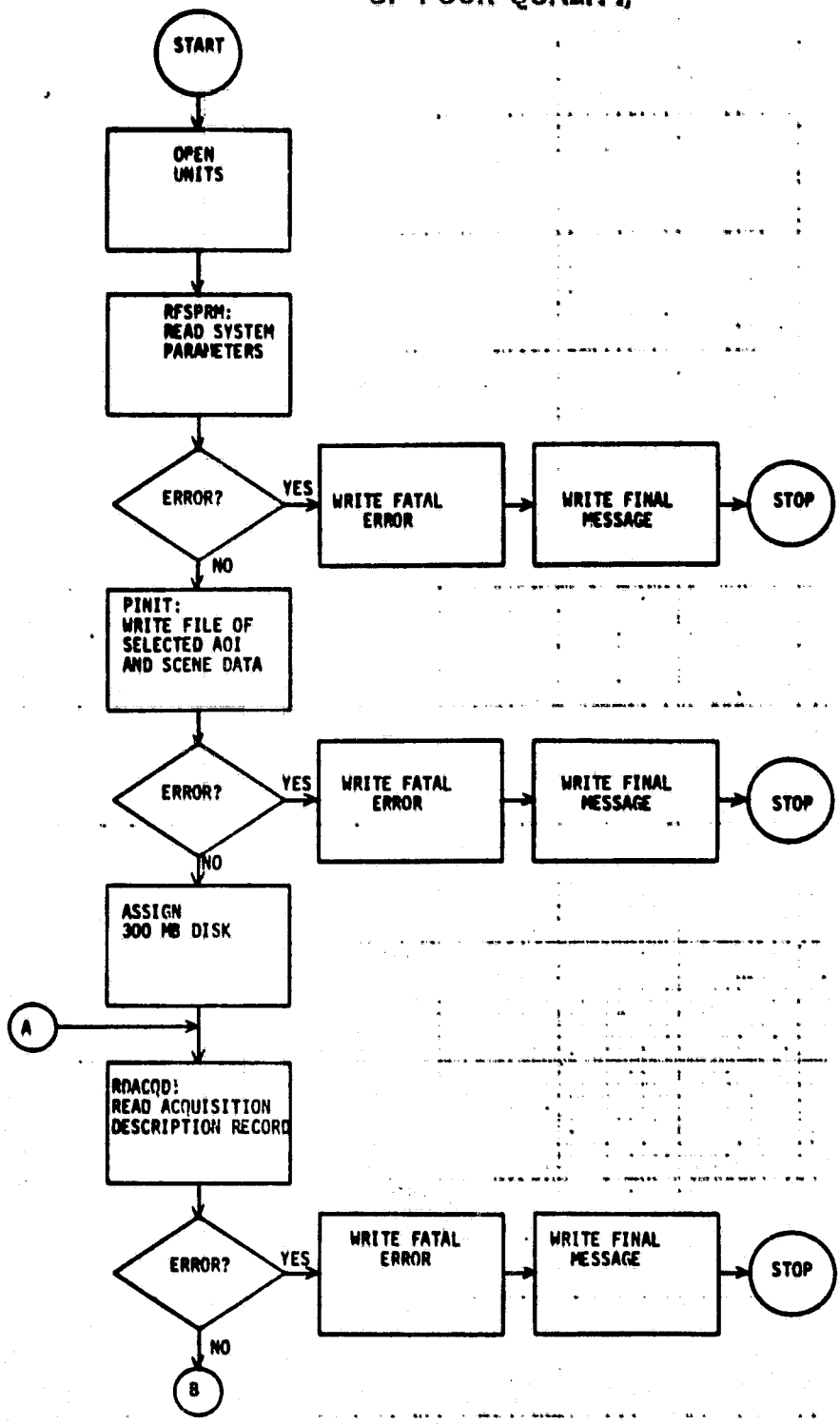

Figure 5.7-1

Flow of Extraction Processor

ORIGINAL PAGE IS
OF POOR QUALITY

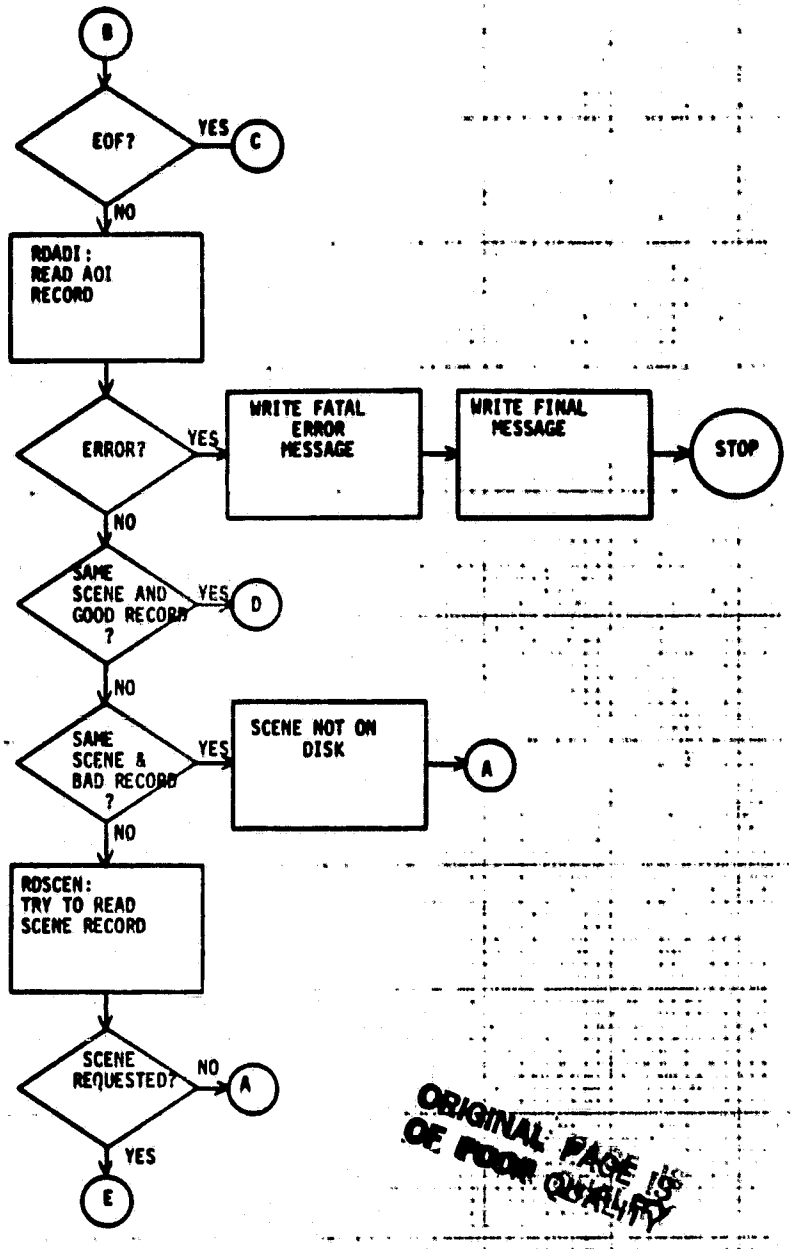

ORIGINAL PAGE IS
OF POOR QUALITY

Figure 5.7-1 (continued)

Flow of Extraction Processor

ORIGINAL PAGE IS
OF POOR QUALITY

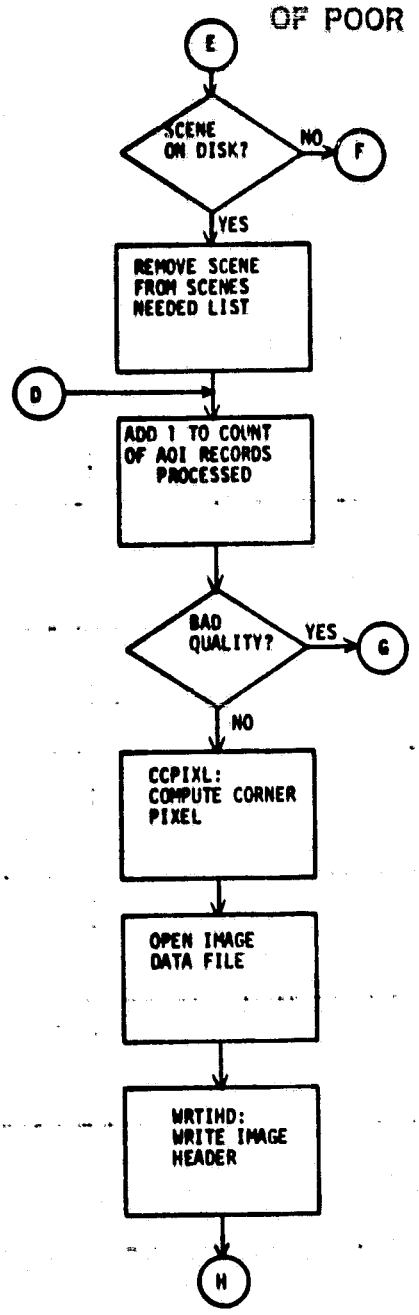

Figure 5.7-1 (continued)

Flow of Extraction Processor

ORIGINAL PAGE IS
OF POOR QUALITY

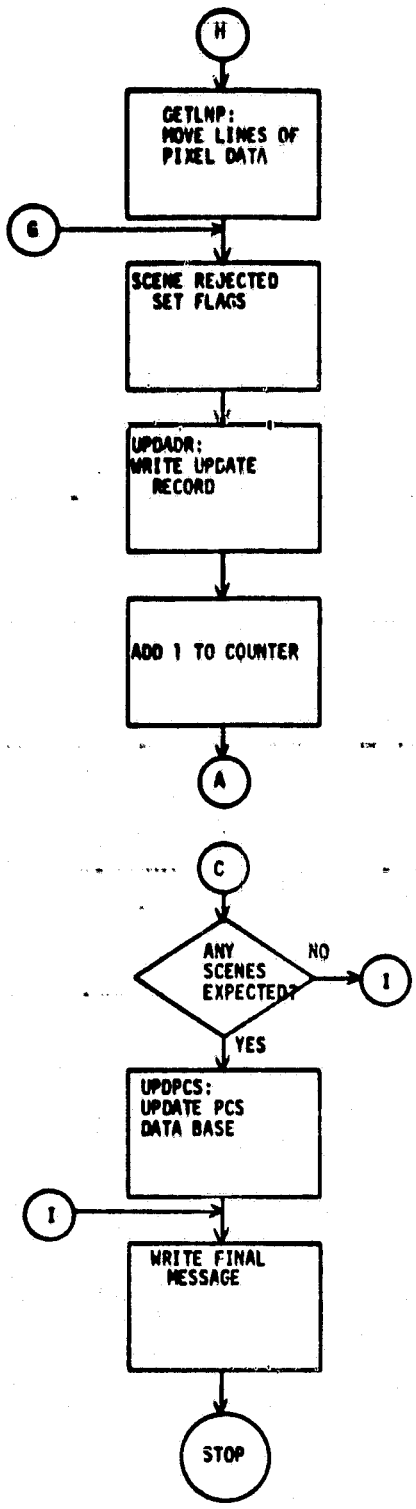

Figure 5.7-1 (continued)

Flow of Extraction Processor

ORIGINAL PAGE IS
OF POOR QUALITY

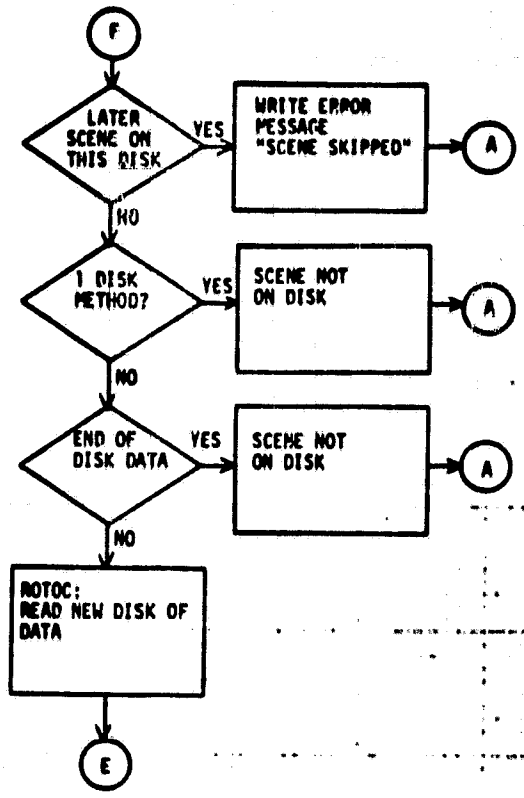

Figure 5.7-1 (concluded)

Flow of Extraction Processor

- **Subroutines Called**

  CKSTDK, RDDSK, WAIT, WTQIO

5.7.3 CHECK STATUS OF DISK, CKSTDK

This subroutine checks the status of the 300MB disks.

- **Inputs**

  Statuses from disk status unit.

- **Outputs**

  Disks statuses.

- **Description**

  A QIO call is made to the disk status unit and the statuses are read.

- **Subroutines Called**

  GETADR, WTQIO

5.7.4 READ DISK, RDDSK

This subroutine reads one buffer of information from the disk.

- **Inputs**

  DKUNIT Logical unit number
  LBNO Logical block number
  NOCHS Number of characters

- **Outputs**

  INBUFF Input buffer
  ISTAT 0 - OK
  2 - Bad starting sector
  3 - Directive error
  4 - Device error

- Description

  If the logical block number is positive, the parameter block, PAR, is initialized and a call is made to WTQIØ. If the directive and device statuses are set to 1, the status is set to 0 and the program returns.

- Subroutines Called

  GETADR, WTQIO

5.7.5 READ FULL SCENE PARAMETERS, RFSPRM

This subroutine reads the system parameter file, sets up the data base name, and saves the task name.

- Inputs

  System Parameter File.

- Outputs

  PCS Data Base Name, Task Name.

- Description

  The system parameter file 'LIVES.DAT' is read and the disk addresses, the task name, the system default values and the disk numbers are saved.

- Subroutines Called

  CLOS$, OPEN$

5.7.6 PARAMETER SUBROUTINE INITIALIZATION, PINIT

This routine writes a file of selected area of interest and scene data.

- Inputs

  PCS Data Base

- Outputs

  Acquisition Description Records on Unit 4, Area of Interest Records on Unit 9, Scene Records on Unit 7.

- Description

  Subroutine PINIT calls RIMS to select all unprocessed acquisition-description records and their associated area of interest records and scene records. An array of all WRS designators needed is built from the scene records.

- Subroutines Called

  EXCDMS.

5.7.7 READ AN ACQUISITION-DESCRIPTION RECORD, RDACQD

The subroutine reads an acquisition-description record.

- Inputs

  Acquisition-description on File 4.

- Outputs

  Acquisition-description Common Block.

- Description

  An acquisition-description record is read.

- Subroutines Called

  None.

5.7.8 READ AREA OF INTEREST, RDAOI

- Inputs

  AØIID Area of Interest ID
  USERID User ID

- Outputs

  Non-imagery file
  Area of Interest Record Read.
  /ADAI/
  PRMSCN Primary/Secondary WRS indicator

- Description

  The area of interest record matching the area of interest and user ID from the acquisition description record is read. Indicators are set for area of interest and end-of-file conditions.

- Subroutines Called

  None.

5.7.9 READ SCENE DESCRIPTION, RDSCEN

This routine reads a scene description record.

- Inputs

  AI Scene Number, Scene File on File 7.

- Outputs

  Scene Record Matching AI Scene Number.

- Description

  The scene record matching the acquisition-description record is located and read. Indicators are set for end-of-file and error conditions.

- Subroutines Called

5.7.10 COMPUTE CORNER PIXEL, CCPIXL

This subroutine computes corner pixel of area of interest relative to the scene.

- Inputs

FMTLAT	Latitude of center of scene.
FMTLON	Longitude of center of scene.
FFRMPX	Number of pixels in full frame.
FFRMLN	Number of lines in full frame.
AILAT	Latitude of center area of interest.
AILONG	Longitude of center or area of interest.
AIPXLS	Number of pixels in area of interest.

AILNES Number of lines in area of interest.

WRSOFF Number of pixels to offset center of scene due to camera.

- Output

CPIXEL Computed leftmost pixel relative to scene (may be negative).

CLINE Computed top line relative to scene (may be negative).

- Description

The latitudes and longitudes are converted to degrees, subroutine TMECTR is called to calculate the UTM easting, northing, and zone. The delta latitude and longitude is calculated in pixels. The corner pixel and line are calculated.

- Subroutines Called

TMECTR

5.7.11 TRANSFORM LATITUDE AND LONGITUDE, TMECTR

- Inputs

PL Latitude and longitude

AXES Semi-major and semi-minor axis of earth

IZONE UTM zone in which transformation is computed

- Outputs

UTM Easting and Northing in meters.

- Description

TMECTR transforms latitude and longitude to UTM easting, northing, and zone.

- Subroutines Called

None.

5.7.12 WRITE IMAGE FILE HEADER, WRTIHD

This subroutine writes the imagery file header.

o Inputs

SCNID	Scene ID
AILNES	Area of interest lines
AIPXLS	Area of interest pixels
PREJRS	Preprocessing reject reason
NOPXAD	Number of pixels to add for border
NOLNAD	Number of lines to add for border

o Outputs

Headers record moved to imagery buffer.

o Description

The imagery header record is set up and moved to the imagery buffer.

o Subroutines Called

WRTBUF

5.7.13 GET LINES OF PIXELS, GETLNP (CPIXEL, CLINES)

This subroutine serves to move pixel data from full scene data base 300 MB disk to imagery file.

o Inputs

NOSCEN	Number of scenes on 300MB disk
CLINE	Center line
CPIXEL	Center pixel
AILNES	Number of A of I lines
AIPXLS	Number of A of I pixels
BNDSEX	Bands to extract
PREJRS	Preprocessing reason
NOPXAD	Number of pixels to add
NOLNAD	Number of lines to add
DSKAD	Disk address

Full scene on 300MB disk

o Outputs

FLPXLS, FLLNES, Lines of pixel data on Imagerv File.

o Description

This subroutine ascertains that the area is completely in the scene or is no more than 1400 pixels/line out of the scene. Then the "PREJRS" is used to determine if the size and location of the area to be extracted is to be adjusted to include a border of pixels used in translation, if necessary, the topmost and leftmost pixels are recalculated and the number of lines and pixels are adjusted. If the topmost line is outside the scene, lines of "377 pixel values are written for the lines outside the scene. The disk address for the scene is calculated and lines of pixel data are then extracted from the scene data for as many of the remaining lines of pixels as possible. Any pixels used as fill values to the left or right of the scene are set to "377. Any lines of data outside the scene are written to the imagery file buffer as lines of "377 pixel values.

o Subroutines Called

FVCLOS, RDDSK, WRTBUF, $JMOD.

5.7.14 WRITE IMAGERY BUFFER, WRTBUF (LINE, NOPXLS, NEWBLK)

This subroutine stores lines of data in a buffer and dumps the buffer using fast video routines.

o Inputs

LINE	Line of data
NOPXLS	Number of characters to move
NEWBLK	NE - Beginning of buffer
	PA - Data to be packed
	DU - Dump buffer

o Outputs

Line written to imagery file.

o Description

This subroutine moves the data in buffer LINE to the fast video buffer BUFFER. The fast video buffer pointer is reset to 1 if the parameter NEWBLK is set to NE; the buffer is written to the imagery file if NEWBLK is set to DU.

o Subroutines Called

FVWAIT, FVWRIT.

5.7.15 WRITE UPDATE RECORD, UPDADR

This subroutine writes a file containing an update record.

o Inputs

ACQDAT	Acquisition date
PREJRS	Quality assessment
SCRREG	Screen and register code
SACLDA	Cloud assessment
FLLNES	Fill lines
FLPXLS	Fill pixels
BNDSEX	Bands extracted
USERID	User ID
AOIID	Area of interest ID
PRMSCN	Primary/Secondary WRS indicator

o Description

A record is written to a transaction file.

o Subroutines Called

CLOS$, OPEN$.

5.7.16 UPDATE PC&S DATA BASE, UPDPCS

This subroutine updates the PC&S data base from update files.

o Inputs

Update files.

- Outputs

  PC&S data base updated.

- Description

  A call is made to COPYTF to pack the transaction files. A call is made to EXCDMS to update the daily data base.

- Subroutines Called

  COPYTF, EXCDMS, WAIT.

5.8 CONDITIONING PROCESSOR, CONDTN

This unit identifies clouds and computes biases and gains for later display of search areas or areas of interest. If the percentage of clouds exceeds a given figure, note is made in the data base; in effect, the image is deleted. After excluding non-agricultural and cloud pixels, biases and gains are calculated on the basis of agricultural pixels. Screening maps are generated on the basis of all pixels.

Figure 5.8-1 show the structure of this program. A driver, CONDTN, calls subroutines to perform the many functions of the processor, as shown there. FSTVID subroutines are to be bound in the main UIC of the computer, but are used here as a copy. EXCDMS and COPYTF are described in section 6.1.1 and 6.2.1 respectively.

The conditioning processor initializes for processing by obtaining the cloud percent threshold value and the disk device number from the system parameter file. Then, using LIMS, it operates two files identifying areas to be processed.

For each Search Area of Interest, the Search Area Data Base and the Screening Map Data Base files are assigned. For each area, pixel data are retrieved from the Search Area Data Base and categorized according to the "SCREEN" algorithm (see Appendix 1).

As pixels are categorized, results are written to the Screening Map Data Base. Concurrently, a count of pixels categorized as cloud cover is tallied. A histogram of radiance values is built for each channel using pixels categorized as agriculture; these are used to calculate biases and gains. When all pixels for an area have been processed, biases and gains are computed using the histogram. The percentage of cloud-covered pixels is computed and compared against the user threshold.

For each area processed, update data for the PC&S Data Base are written to a transaction file. The update include biases and gains

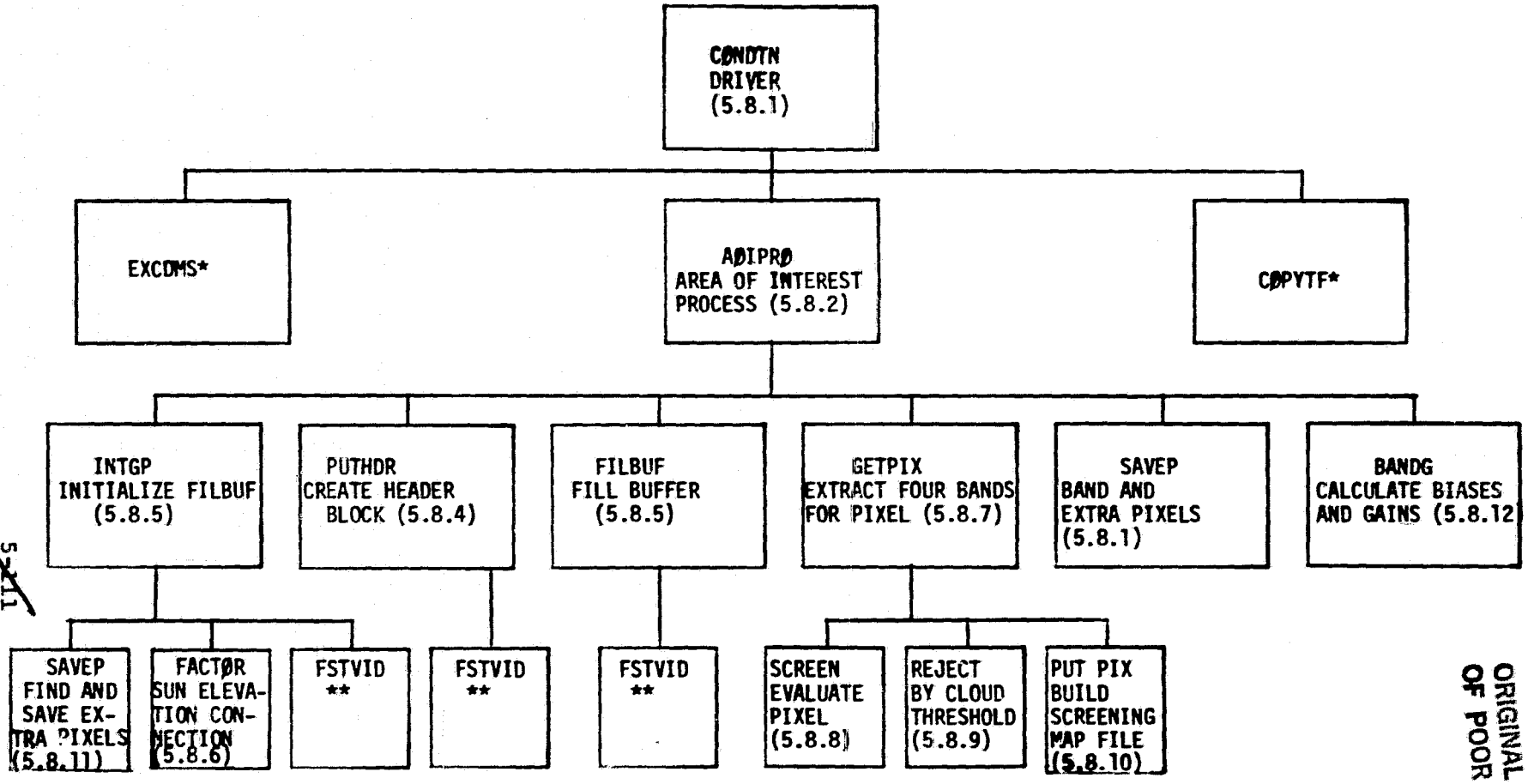

ORIGINAL PAGE IS
OF POOR QUALITY

Structure of Conditioning Processor

Figure 5.8-1

* documented in section _____

** available on main UIC of computer

and, the percent cloud cover value calculated from the count of pixels categorized. In addition to this there is a status indicator which will reflect whether or not the cloud cover calculated exceeded the threshold value.

After all areas have been processed, the PC&S Data Base is updated by copying individual area transaction files to an update file. LIMS is then used to update the data base using the Update File.

5.8.1 MAIN PROGRAM, CONDTN

o Purpose

This is the main driver of the processor. It communicates with the Data Base to build files describing the area of interest. It will also update the data base when all the area of interest acquisition records have been processed.

o Input and Output

Files:

File	Usage	Record Format
CONDTN.RP1	Acquisition Description Record	1X, A1, 4X, 6A1, A4, 38X, 2I1, 1X, A4, 22X, 2I3
CONDTN.RP2	Area of Interest Record	6X, 6A1, 2I5, 2X, I2
LIVESP.DAT	Lives Parameter File	16X, I2, IX, I3, 1X, I3, 17X, A1
CONDTN.TRN	The processed Records Transaction File	1X, I2, 1X, I4, 1X, A4, 1X, I1, 1X, 4I5, 1X, 4I5, 1X, I2

Common Blocks: /REC/

Name	Rel. Word Number	Usage	Type	Meaning
SCRREG	1	CONSTANT	I	The screening and registration status word
SACLDA	2	CONSTANT	I	The search area cloud assessment status word
SRGDAT	3	CONSTANT	A	The screening and registration date
NPT	4	CONSTANT	I	Number of pixels translated
NLT	5	CONSTANT	I	Number of lines translated
AOIP	6	CONSTANT	I	Area of interest pixel
AOIL	7	CONSTANT	I	Area of interest line
CLDPTH	8	CONSTANT	I	The cloud percent threshold value given by user
SRJCOD	1	CONSTANT	I	The SCREEN reject code.
	/PUTHDR/			
HEADER(256)	1	ARRAY	I	The header block array
FILN3(15) 2	2	ARRAY	A	The screening map file name

Local Variables:

ACQDAT = The Acquisition Date

AOIID = The area of interest ID for the acquisition

BYPASL = The size of an acceptable number of lines to process.

BYPASP = The size of an acceptable number of pixels to process.

END = The flag which indicates the end of the file

FULLN = The number of border lines

FULPIX = The number of border pixels

IBIAS = The array which contains the bias calculations for each band

IGAINS = The array which contains the gains calculations for each band

PCNTCC = The percent cloud cover value calculated

PCS(3) = The word containing the data base disk number

SACLDA = The search area cloud assessment status word

SUNELA = The sun elevation angle

STATUS = The status word upon returning from EXCDMS

TRANS = The transition flag indicating that an acquisition description record has been processed

UPDATE = The update flag which indicates that the acquisition description record processed should be used to update the DB.

USERID = The User ID for the acquisition

- Subroutines Called

  AOIPRO: Area of interest process

  EXCDMS: Execute, data management system

  COPYTF: Copy transaction file

- Flow

See figure 5.8-2.

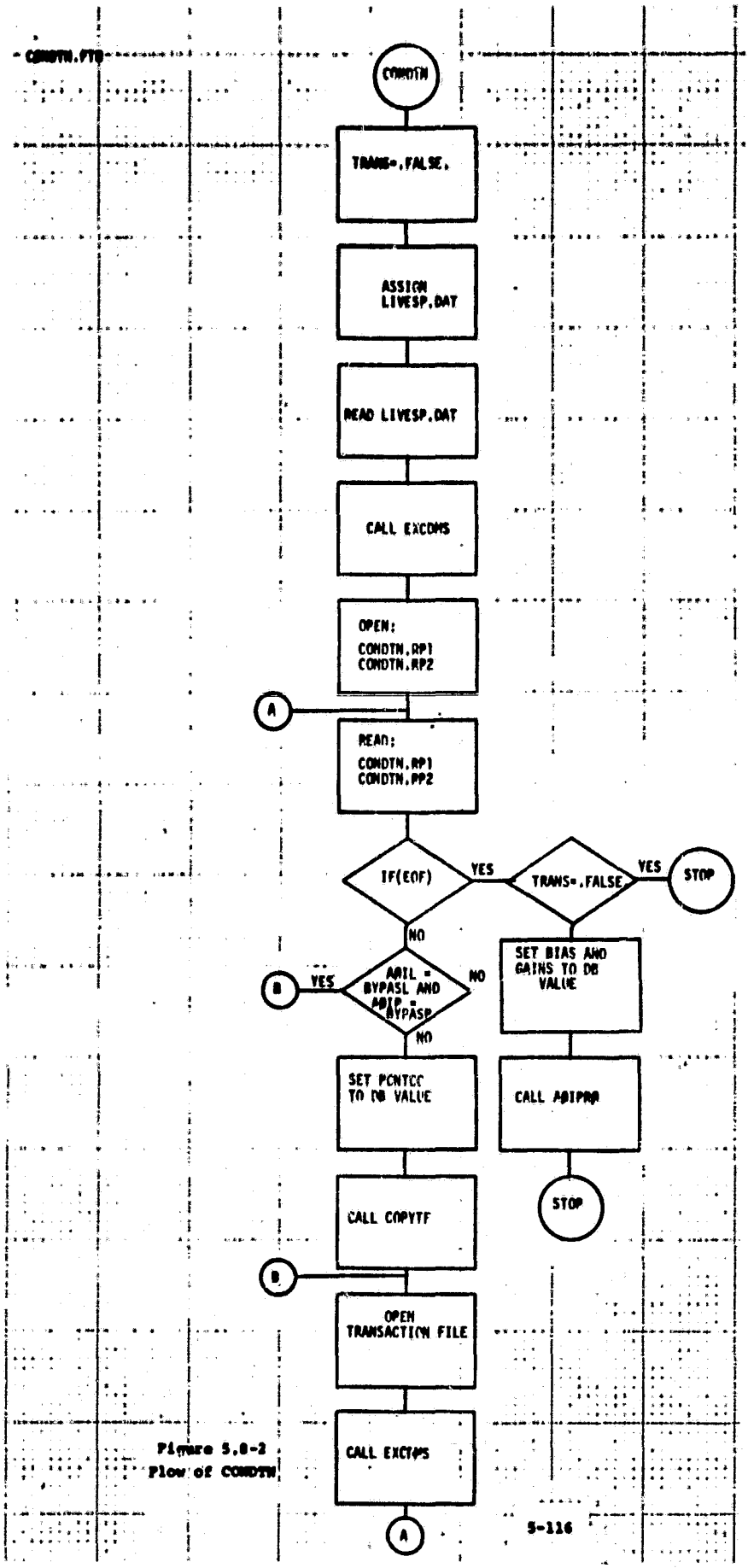

Figure 5.8-2
Flow of CONDTN

ORIGINAL PAGE IS OF POOR QUALITY

5.8.2 Area of Interest Process Subroutine, AOIPRO

o Description

This routine will determine by using the status words which acquisition description records need processing. Also what type of processing (i.e. search area or area of interest).

o Input and Output

Calling Sequence: CALL AOIPRO (FILN1, BIAS, GAINS, PCNTCC, UPDATE, CTHRES, SUNELA, FULLN, FULPIX)

Calling Arguments:

Name	Usage	Type	Meaning
FILN1	Array	A	File name of the image data file.
BIAS	Array	R	The bias calculations for each band
GAINS	Array	R	The gains calculations for each band
PCNTCC	Variable	I	The % cloud cover calculated from image
UPDATE	Variable	L	The status of the acquisition description record processed
CTHRES	Constant	I	The % cloud cover threshold from user
SUNELA	Constant	I	The sun elevation angle
FULLN	Constant	I	The border lines (TOTAL)
FULPIX	Constant	I	The border pixels (TOTAL)

Files:

File	Usage	Record Format
CØNDTN.SAI	Image Data File	Read with fast video routine 1 block at a time

Common Blocks: /REJECT/

Name	Rel. Word Number	Usage	Type	Meaning
CLOD	1	Variable	I	The counter for pixels labeled cloud
CLSH	2	Variable	I	The counter for pixels cloud shadow
WATR	3	Variable	I	The counter for pixels water
SNOW	4	Variable	I	The counter for pixels snow
GARB	5	Variable	I	The counter for pixels garbled
AGRI	6	Variable	I	The counter for pixels agriculture

/REC/ and /PUTHDR/ refer to documentation on CONDTN (section 5.8.1).

o **Local Variables:**

CLDPTH = REFURE TO CONDTN DOCUMENTATION

CTHRES = REFURE TO CONDTN DOCUMENTATION

SACLDA = REFURE TO CONDTN DOCUMENTATION

SCRREG = REFURE TO CONDTN DOCUMENTATION

SRGDAT = REFURE TO CONDTN DOCUMENTATION

UPDATE = REFURE TO CONDTN DOCUMENTATION

MOREPX = The flag used for reading the acquisition description image file.

o Subroutines Called:

INTGP = Initialize "Filbuf"

PUTHDR = Put Header

FILBUF = Fill buffer

GETPIX = Get Pixel

SAVEP = Save Pixel

FVCLOS = Fas video close

BANDG = Bias and gains

o Flow

See figure 5.8-3.

o Called by

CONDTN = conditioning

AOIPRO.FTN

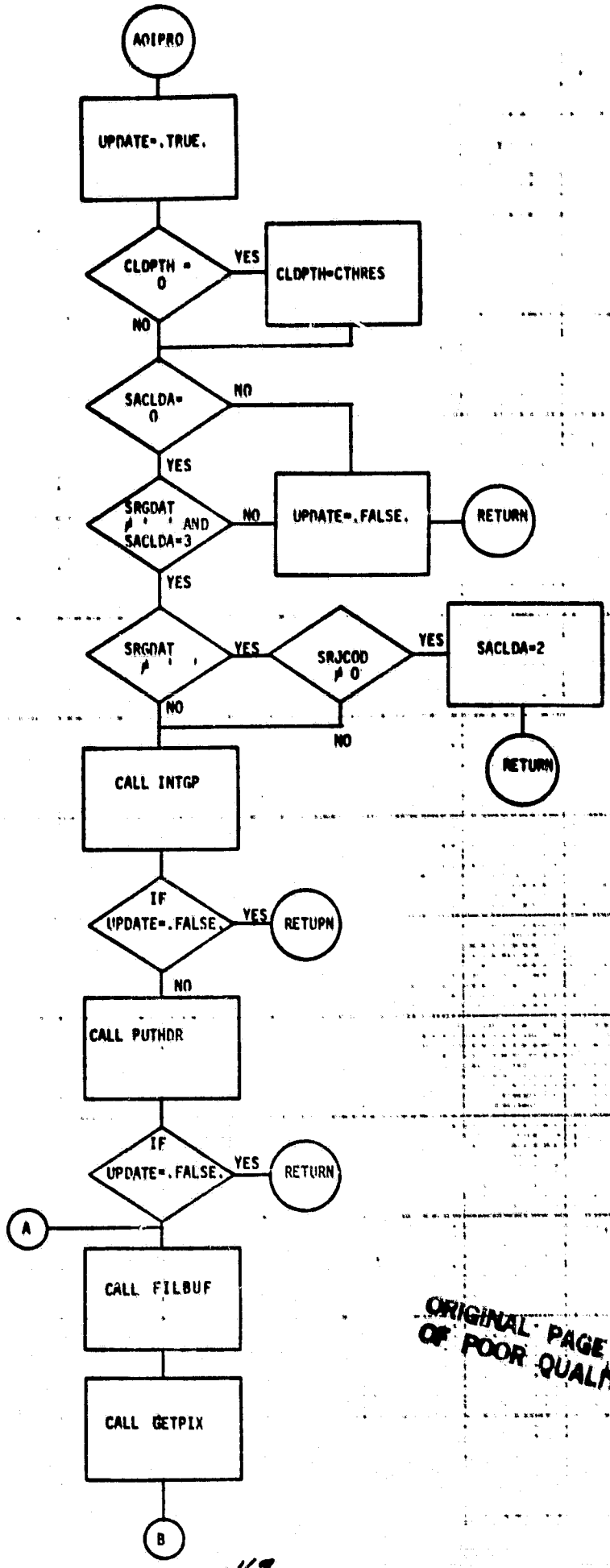

Figure 5.6-3
Flow of AOIPRO

ORIGINAL PAGE IS OF POOR QUALITY

ORIGINAL PAGE IS
OF POOR QUALITY

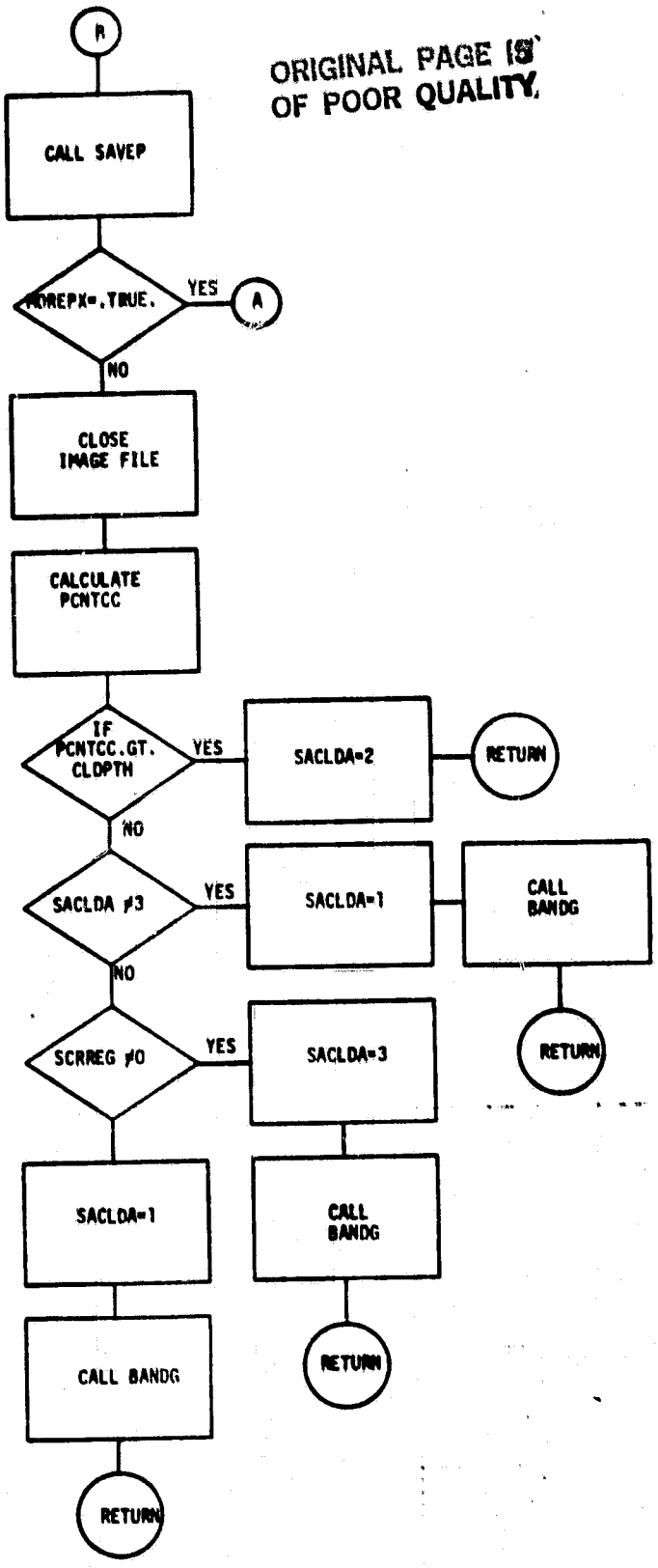

Figure 5.8-3
Flow of AQIPRO (Concluded)

5.8.3 INITIALIZE FILBUF SUBROUTINE, INTGP

o Description

This routine will initialize the routine Filbuf by opening the data file, reading the header block. It will also calculate the initial values for the buffer pointer.

o Input and Output

Calling Sequence:

```
Call INTGP (FILN1, TBYTES, SUNELA, FULLN, FULPIX, TNLB, TLINE, OVER,
            UPDATE)
```

Calling Arguments:

Name	Usage	Type	Meaning
FILN1	ARRAY	A	Contains the Image Data File Name
BYTES	VARIABLE	I	See FILBUF Documentation
SUNELA	CONSTANT	I	See AOIPRO Documentation
FULLN	CONSTANT	I	See AOIPRO Documentation
FULPIX	CONSTANT	I	See AOIPRO Documentation
TNLB	CONSTANT	I	Total number of lines that will fit in the buffer
TLINE	CONSTANT	I	See FILBUF Documentation
OVER	CONSTANT	I	See FILBUF Documentation
UPDATE	CONSTANT	I	See AOIPRO Documentation

Files:

File	Usage	Record Format
FILN1	ARRAY	Read with fast video (512 word) blocks at a time

Common Blocks:

Name	Rel. Word Number	Usage	Type	Meaning
	/REJECT/			See AOIPRO Documentation
	/REC/			See CONDTN Documentation
	/PUTHDR/			See CONDTN Documentation
	/BOUNDS/			See FILBUF Documentation
	/FILLB/			See FILBUF Documentation
	/HIST/			See SCREEN Documentation

o Local Variables:

AOIL = The number of lines in the area of interest image data

AOIP = The number of pixels/line in the area of interest image data

BAND = An array which contains a histogram for each band number [4-7]

DEFLTB = The default value of nbytes

FBYTES = The first 512 bytes of data read from the image file

ISTAT = The status word returned from FVOPEN

NDB = The starting block number for the image data

NBYTES = The number of bytes to be read by fast video read

NLB = The number of lines that will fit into the buffer (FillB)

NOBLK = The number of blocks which can contain Tbytes

NP = The number of pixel/line in the image data

NSL = The number of lines in the image data

OVER = The flag which controls the number of fast video reads; 1 = read; 0 = no read.

SAVEOR = The number of bytes over-read

SKBYTE = The number of bytes representing the top border lines skipped.

START1 = The starting possition for the next read into the buffer (FillB)

TBYTES = The total number of bytes to process from the buffer (FillB)

TIOST = The total number of blocks read

TLINE = Total number of lines to process

TNLB = The total number of lines processed

TOTALB = The total number of bytes to process

- Subroutines Called:

  FVOPEN = Fast video open

  FVREAD = Fast video read

  FVCLOS = Fast video close

  FACTOR = Sun angle correction factor

- Called By

  AOIPRO = Area of interest process.

5.8.4 CREATE HEADER BLOCK SUBROUTINE, PUTHDR

o Description

This routine will create the header block for the screening map file

o Input and Output

Calling Sequence:

Call PUTHDR (UPDATE)

Calling Arguments

Name	Usage	Type	Meaning
UPDATE	Variable	L	Will indicate the status .TRUE. = the file was opened .FALSE. = otherwise

Files:

File	Usage	Record Format
FILN3	Array	Contains the name of the screening map file.

Common Blocks:

Name	Rel. Word Number	Usage	Type	Meaning
		/PUTHDR/		See CONDTN Documentation
		/REC/		See CONDTN Documentation
		/BOUNDS/		See FILBUF Documentation

o Local Variables

AOIP =
AOIL =
NDB =

} Refure to INTGP Documentation Section (5.8.3)

- Subroutines Called

  FVOPEN = Fast video open

  FVWRIT = Fast video write

  FVWAIT = Fast video wait

- Called By

  AOIPRO = Area of interest process

5.8.5 FILL BUFFER SUBROUTINE, FILBUF

o Description

This routine will read a specified number of bytes of imagery data and fill an array. It determines when to stop reading the data fill.

o Input and Output

Calling Sequence: CALL FILBUF (TBYTES, TNLB, TLINE, OVER).

Calling Arguments:

Name	Usage	Type	Meaning
TBYTES	Variable	I	The number of bytes to process
TNLB	Variable	I	The total number of lines read into the buffer
TLINE	Variable	I	The total number of lines processed
OVER	Variable	I	A flag which indicates that no more image data is to be read

Files:

File	Usage	Record Format
USERID,		
SITEID.SAI	Image Data File	Using fast video routine to read (512 word) blocks at a time

Common Blocks: /BOUNDS/

Name	Rel. Word Number	Usage	Type	Meaning
NBYTES	1	Variable	I	The number of bytes to be read by fast viedo read
NSL	2	Constant	I	Number of scan lines
NLB	3	Variable	I	Number of lines in the buffer
NP	4	Variable	I	Number of pixels per line
SAVEOR	5	Variable	I	The number of pixels saved
TIOST	6	Variable	I	The number of blocks read
DEFLTB	7	Variable	I	The number of bytes that will fit in buff
STARTP	8	Variable	I	The starting location pointer of buffer
TOTALB	9	Constant	I	The total number of bytes to be read
	/FILLB/			
FILLB	1	Array	bite	Array which contains image data to be processed

o Local Variables

OFFSET = A flag used for indicating when the STARTP pointer is not an even word boundary

TDLEFT = Total number of blocks left to read and process.

- Subroutines Called:

  FVREAD = Fast video read

  FVWAIT = Fast video wait

  FVCLOS = Fast video close

- Called By

AOIPRO = Area of interest process.

5.8.6 SUN ELEVATION CORRECTION FACTOR SUBROUTINE, FACTOR

o Description

This routine will calculate the correction factor for the bands on each pixel.

Calling Sequence: CALL FACTOR (SUNELA)

Calling Arguments:

Name	Usage	Type	Meaning
SUNELA	Constant	I	The sun elevation angle

Common Blocks: /SCREEN/

See documentation on SCREEN (ref. 5.8.8).

o Local Variables:

CONSTN = A constant value of 39 deg.

FACT = An array which contains the sun correction factor for the four bands

SUN = The sun correction factor

RAD = The deg. to rad. conversion factor

ZENITH = The zenith angle

o Called By

INTGP = Initialize GETPIX

5.8.7 EXTRACT FOUR BANDS PER PIXEL SUBROUTINE, GETPIX

o Description

This routine extracts the four bands for each pixel in a line. All pixels are extracted from the buffer (FILLB).

o Input and Output

Calling Sequence: CALL GETPIX (AOIP, FULPIX, SCRREG, TLINE)

Calling Arguments:

Name	Usage	Type	Meaning
AOIP	Constant	I	Area of interest pixels per line
FULPIX	Constant	I	See AOIPRO Documentation
SCRREG	Constant	I	See CONDTN Documentation
TLINE	Constant	I	See INTGP Documentation

Common Blocks:

Name	Rel. Word Number	Usage	Type	Meaning
		/BOUNDS/		See FILBUF Documentation
		/FILLB/		See FILBUF Documentation

o Local Variables:

LEFTB = The starting position in the buffer (FILLB) for processing pixels

PIXB = An array containing the pixel value for each band

RIGHTB = The ending position in the buffer (FILLB) for processing pixels

- Subroutines Called:

  SCREEN = Screen algorithm

  REJECT = Reject algorithm

  PUTPIX = Put pixel

- Called By

  AOIPRO = Area of interest process.

5.8.8 EVALUATE PIXEL SUBROUTINE, SCREEN

o Description

This routine will evaluate the pixel image vector (band4, band5, band6, band7). It will label each pixel according to ERIM algorithm (screen) developed by P. F. Lambeck.

o Input and Output

Calling Sequence: CALL SCREEN (PIXB, LABEL)

Calling Arguments:

Name	Usage	Type	Meaning
PIXB	Array	Bite	The array which contains the four band values per pixel
LABEL	Constant	I	The value assigned the pixel by the screening algorithm

Common Blocks: /SCREEN/

Name	Rel. Word Number	Usage	Type	Meaning
FACT	1	Array	R	The correction factor array
		/HIST/		
BAND4	1	Array	I	The array which contains the histogram for band 4 of agri. pixels
BAND5	2	Array	I	The array which contains the histogram for band 5 of agri. pixels.
BAND6	3	Array	I	The array which contains the histogram for band 6 of agri. pixels
BAND7	4	Array	I	The array which contains the histogram for band 7 of agri. pixels

- Local Variables:

  LABEL = The label given to each pixel

  PIX = An array of pixel values (PIXB) for each band after being operated on by fact.

  PB4 = The pix value for band 4 per pixel

  PB5 = The pix value for band 5 per pixel

  PB6 = The pix value for band 6 per pixel

  PB7 = The pix value for band 7 per pixel

- Called By:

  GETPIX = Get pixel

5.8.9 REJECT BY CLOUD THRESHOLD SUBROUTINE, REJECT

o Description

This routine will reject an acquisition by the percent cloud threshold test algorithm.

o Input and Output

Calling Sequence: CALL REJECT (LABEL)

Calling Arguments:

Name	Usage	Type	Meaning
LABEL	Variable	I	The label assigned to each pixel by the screening algorithm

Common Blocks: /REJECT/

Name	Rel. Word Number	Usage	Type	Meaning
				See AOIPRO Documentation.

o Local Variables:

AGRI = A counter for the number of pixels labeled agriculture

CLOD = A counter for the number of pixels labeled cloud

CLSH = A counter for the number of pixels labeled cloud shadow

GARB = A counter for the number of pixels labeled garbled

WATR = A counter for the number for pixels labeled water

SNOW = A counter for the number for pixels labeled snow

SLABEL = The total number of pixels labeled CLOD, CLSH, GARB

TLABEL = The total number of labeled pixels which are non-filled

o Called By:

GETPIX = Get pixel

5.8.10 BUILD SCREENING MAP FILE, PUTPIX

o Description

This routine will build the screening map file. It will insert the label assigned to each pixel into a buffer corresponding to the number of the pixel and the line it was extracted from at the SAI File Source.

o Input and Output

Calling Sequence: CALL PUTPIX (AOIP, TLINE, LABEL)

Calling Arguments:

Name	Usage	Type	Meaning
AOIP	Constant	I	The number of pixels per line in the area of interest
TLINE	Constant	I	The total number of lines to process
LABEL	Variable	I	The label assigned to each pixel

Files:	Usage	Record Format
USERID, AOID.SCM	The screening map file	Write in (512 word) bytes with fast video

Common Blocks:

Name	Rel. Word Number	Usage	Type	Meaning
		/BOUNDS/		See FILBUF Documentation.

o Local Variables:

BCOUNT = The counter for the number of bytes used up in the buffer.

LCOUNT = The counter for the number of lines processed.

PCOUNT = The counter for the number of pixels processed in each line.

- Subroutines Called:

  FVWRIT = Fast video write

  FVWAIT = Fast video wait

  FVCLOS - Fast video close

- Called By:

  GETPIX = Get pixel.

5.8.11 FIND AND SAVE EXTRA PIXELS, SAVEP

o Description

This routine will take the data from the lower part of the buffer (FILLB) because of the over-read and move it to the

Calling Sequence: CALL SAVEP(MOREPX, TBYTES, OVER)

Calling Arguments:

Name	Usage	Type	Meaning
MOREPX	Variable	L	The flag which indicates whether there is data moved in the buffer or not
TBYTES	Variable	I	The number of bytes processed from the buffer (FILLB)
OVER	Variable	I	Indicates there is no more data read with fast video.

Common Blocks:

Name	Rel Word Number	Usage	Type	Meaning
		/BOUNDS/		See FILBUF Documentation
		/FILLB/		See FILBUF Documentation

Local Variables:

Defined in other routines (see section 5.8.3 for INTGP subroutine).

Called By:

INTGP = Initialize get pixel

AOIPRO = Area of interest process

5.8.12 CALCULATE BIASES AND GAINS SUBROUTINE BANDG

o Description

This routine will calculate the bias and gains to each [4-7] it will determine the max., and min. value of each band histogram. for the calculations.

o Input and Output

Calling Sequence: CALL BANDG (BIAS, GAINS)

Calling Arguments:

Name	Usage	Type	Meaning
BIAS	Array	R	The bias calculations for all four bands of pixels labeled agriculture
GAINS	Array	R	The gains calculations for all four bands of pixels labeled agriculture

Common Blocks: /HIST/ (See documentation for SCREEN subroutine (5.8.8)

Local Variables:

MAXB[4-7] = The max. value found in the histograms for bands [4-7].

MINB [4-7] = The mini value found in the histograms for bands [4-7].

MIN[4-7] = The location of min. value on the histogram for bands [4-7].

MAX[4-7] = The location of max. value on the histogram for bands [4-7].

o Called By:

AOIPRO = Area of interest process.

5.9 SCREENING AND TRANSLATION PROCESSOR, SCRNTR

The screening and translation function is organized into a main program, STMMP (5.9.1), which uses the following subroutines:

DIWPA	(5.9.2)
JUL	(5.9.3)
JULIAN	(5.9.4)
PURTI	(5.9.5)
RUIDC	(5.9.6)
SCREEN	(5.9.7)
SNAST	(5.9.8)
STIDR	(5.9.9)
TRANSL	(5.9.10)

The relation of the main program and subroutines is shown in figure 5.9-1. Menus and options available to the analyst are presented in figure 5.9-2.

Most communication between program units in this processor is through common blocks. Variables in these blocks are defined in tables 5.9-1 through 5.9-5:

DWPA	(5.9-1)
FILE	(5.9-2)
MGDF	(5.9-3)
DB	(5.9-4)
SUB	(5.9-5)

In addition, a number of small one-subroutine programs were written to support the screening and translation processor (SCRNTR). The programs create data files which are used by SCRNTR. Use of these files helps to reduce the size of the processor and makes it more flexible and efficient. In each case there is no input to the programs and the output is a single file.

DSCWRT: Writes a file which contains the text of prompting questions used by the I-100 Terminal User.

DSHORT: Writes a file which contains the short version of the prompting questions for the I-100 Terminal User.

HELP: Writes a file which contains the menu List for the I-100 Terminal User.

DEFAUL: Writes a file which contains the default values of the prompting questions for the I-100 Terminal User.

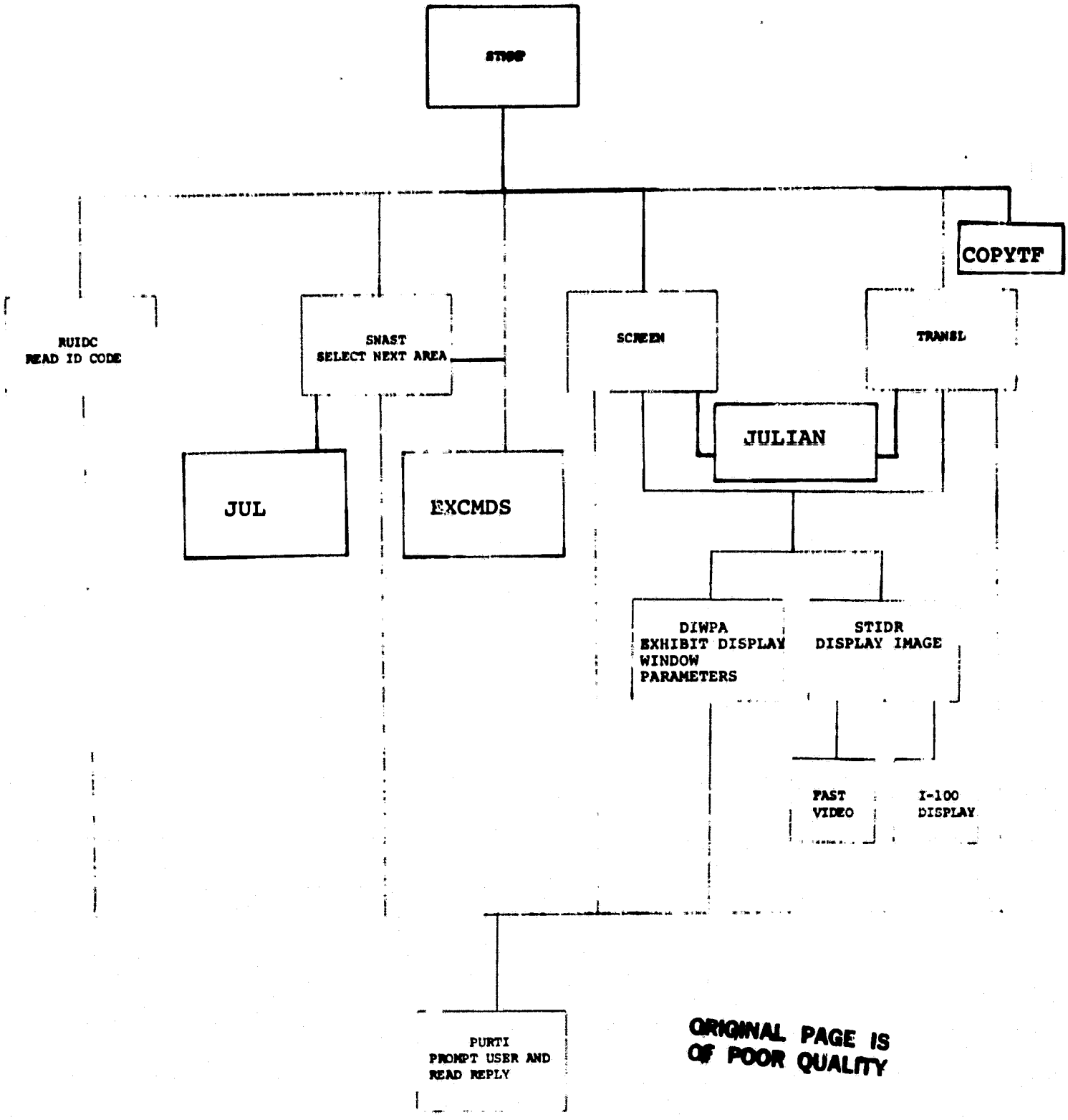

ORIGINAL PAGE IS
OF POOR QUALITY

Figure 5. 1 Screening and Translation Processor

ORIGINAL PAGE IS
OF POOR QUALITY

		LONG FORM	SHORT FORM
JBROUTINE	COMMAND ENTRIES:		(Same)
PURT1	-EXIT	CLOSE ALL FILES AND TERMINATE PROCESSING	
	-LONG	SET FLAG TO GIVE LONG FORM OF MESSAGES	
	-SHORT	SET FLAG FOR SHORT FORM OF MESSAGES	
	-HELP	GIVE THIS LIST OF COMMANDS	
	-RESTART	STOP CURRENT PROCESS AND ACCEPT NEW USER ID.	
	-LIST	GIVE LIST OF AREAS AVAILABLE FOR PROCESSING	
	-ALTER	EXHIBIT DISPLAY WINDOW PARAMETERS AND ALLOW CHANGES	
	-DEFAULT	USE DEFAULT DISPLAY WONDOW PARAMETERS	
	-BACKUP	REPEAT THE IMMEDIATELY PREVIOUS OPERATON	
	-SKIP	SKIP THE AREA NOW IN PROCESS	
	-SELECT	SELECT A PARTICULAR AREA FOR PNOCESSING	
	-REJECT	MARK CURRENT AREA REJECTED	
	-ACCEPT	MARK CURRENT AREA ACCEPTED	
	-FORCE	READ TRANSLATION OFFSET DX, DY FROM KEYBOARD AND ACCEPT SEARCH AREAS WITH THOSE VALUES.	
RUIDC		SCREENING AND TRANSLATION PROCESSOR dd/mmm/yy hh:mm:ss	(Same)
RUIDC		ENTER TWO-CHARACTER PROJECT CODE USER I.D. >	USER I.D. >
RUIDC		cc IS NOT A VALID PROJECT CODE USER I.D.	cc INVALID
SNAST		AT THIS TIME FOR USER I.D. cc THERE ARE NO IMAGE FILES IN THE QUEUE FOR SCREENING OR TRANSLATION AND NOT ALREADY PROCESSED. YOU CAN: -EXIT AND RESTART WITH A DIFFERENT USER I.D. -LIST EXISTING AREAS >	NO AREAS FOR cc >
SNAST		SEARCH FOR UNPROCESSED AREAS STARTING OVER AT BEGINNING OF LIST OF AVAILABLE UNPROCESSED AREAS.	SEARCHING FROM TOP OF LIST
SNAST		SEARCH AREA ccnnnn FOR TRANSLATION	(Same)
SNAST		AREA ccnnnn FOR SCREENING	(Same)
SNAST		YOU CAN: ENTER CARRIAGE RETURN TO BEGIN PROCESSING THIS AREA, -SKIP TO NEXT AREA IN THE LIST, -LIST ALL EXISTING AREAS, -NAME YOUR OWN CHOICE FOR NEXT AREA OR CHOOSE TO -MODIFY OR TAKE -DEFAULT DISPLAY WINDOW PARAMETERS, OR -EXIT. >	(Omitted)
SNAST		SPECIFY AREA OF INTEREST BY FOUR-DIGIT AREA NUMBER >	SPECIFY SEARCH AREA >
SNAST		NO SUCH AREA AS ccnnnn IS AMONG FILES IN QUEUE FOR PROCESSING.	
SNAST		LIST OF EXISTING AREA IMAGE FILES FOR SCREENING OR TRANSLATION dd/mmm/yy hh/mm/ss AREA ccnnnn S (or T) AREA REFERENCE IMAGE FILE NAME eeeeee.eee;nnn eeeeee.eee;nnn SIZE: LINES nnnn nnnn PIXELS nnnn nnnn BANDS n,n,n,n n ACQUISITION DATE dd/mmm/yy dd/mmm/yy POSITION (primary/secondary) (p/s) SATELLITE (b/c) (b/c) MARGIN SIZES LINES AT TOP 22, NO FILL LINES AT BOTTOM 22, 8 FILL PIXELS AT LEFT 44, NO FILL PIXELS AT RIGHT 44, 6 FILL	AREA ccnnnn FOR SCREENING OR SEARCH AREA ccnnnn FOR TRANSLATION

Figure 5.9-2

Messages for User Dialog

ORIGINAL PAGE IS
OF POOR QUALITY

SUBROUTINE	LONG FORM	SHORT FORM
TRANSL	SELECT SUB-AREA FOR CONTROL POINT m. POSITION CURSOR ON REFERENCE IMAGE AND THEN ENTER KEYBOARD CARRIAGE RETURN. >	SUB-AREA m >
TRANSL	CURSOR POSITION FALLS BEYOND DISPLAYED AREA. REPOSITION CURSOR AND TRY AGAIN.	TRANSLATION OVER EDGE OF ACQUISITION. REPOSITION
TRANSL	GIVE REFERENCE IMAGE LOCATION OF CONTROL POINT m. POSITION CURSOR ON REFERENCE IMAGE, THEN GIVE CARRIAGE RETURN. >	CURSOR CONTROL POINT m, REF. >
TRANSL	GIVE SEARCH AREA LOCATION OF CONTROL POINT m. POSITION CURSOR ON SEARCH AREA SUB-IMAGE, THEN GIVE CARRIAGE RETURN. >	POINT m, SEARCH AREA >
TRANSL	* CURSOR POSITION FALLS BEYOND DISPLAYED * * SUB-AREA FOR CONTROL POINT m. * * REPOSITION CURSOR AND TRY AGAIN. *	**** OUTSIDE SUB-AREA ****
TRANSL	CONTROL POINT m OFFSETS: DX = nnn, DY = nnn	(Same)
TRANSL	CONTROL POINT m OFFSETS: DX = nnn, DY = nnn	(Same)
TRANSL	**** OFFSET PUTS AREA OF INTEREST OVER THE EDGE OF **** **** AVAILABLE IMAGE DATA FROM THIS ACQUISITION **** **** ENTER CARRIAGE RETURN TO REJECT THIS SEARCH **** **** AREA AND CONTINUE. **** >	**** REJECT: OUTSIDE AVAILABLE DATA **** >
TRANSL	DIFFERENCES IN OFFSETS OF CONTROL POINTS POINT 1 TO POINT 2 DDX = nnn, DDY = nnn. DIFFERENCES ARE WITHIN TOLERANCES. ENTER CARRIAGE RETURN TO ACCEPT NEW IMAGE AND CONTINUE. >	ACCEPT: WITHIN TOLERANCE >
TRANSL	DIFFERENCES IN TRANSLATION OFFSETS EXCEED TOLERANCE. ENTER THIRD CONTROL POINT.	TOLERANCE EXCEEDED
TRANSL	DIFFERENCES IN OFFSETS OF CONTROL POINTS POINT 1 TO POINT 2 DDX = nnn, DDY = nnn POINT 1 TO POINT 3 DDX = nnn, DDY = nnn POINT 2 TO POINT 3 DDX = nnn, DDY = nnn	(Same)
TRANSL	DIFFERENCES IN OFFSET BETWEEN POINT n AND POINT m ARE WITHIN TOLERANCE. ENTER CARRIAGE RETURN TO ACCEPT THIS TRANSLATION AND CONTINUE. >	ACCEPT: WITHIN TOLERANCE >
TRANSL	DIFFERENCES IN OFFSET BETWEEN CONTROL POINTS ALL EXCEED TOLERANCE. ENTER CARRIAGE RETURN TO REJECT THIS SEARCH AREA AND CONTINUE. >	REJECT: OFFSET INCONSISTENT >
SNAST	AREA ccnnnn FOR SCREENING. AFTER VIEWING DISPLAYED IMAGE, ENTER -A TO ACCEPT OR -R TO REJECT IMAGE. >	AREA ccnnnn FOR SCREENING >
TRANSL	ENTER DX, DY FOR FORCED TRANSLATION AND ACCEPTANCE OF SEARCH AREA (DX IS HORIZONTAL, DY IS VERTICAL LINE COUNT) >	ENTRY DX, DY >

Figure 5.9-2
Messages for User Dialog (Cont'd)

C-3

TABLE 5.9-1 - COMMON BLOCK /DWPA/

/DWPA/ is used in subroutines STMMP, SCREEN, TRANSL, STIDR and DIWPA.

Variable	Description
IWD	Array containing the window display parameters for the I-100.

TABLE 5.9-2 - COMMON BLOCK /FILE/

/FILE/ is used in subroutines STMMP and SNAST, TRANSL and SCREEN.

Variable	Description
CFILE	Array containing the command file names
DBNAME	Array containing the data base files names
MFILE	Array containing the message file names
RFILE	Array containing the report file names
TFILE	Array containing the transaction file names
TSK	Array containing the processor's name (SCRNTR)
UFILE	Array containing the update file names

TABLE 5.9-3 - COMMON BLOCK /MGDF/

/MGDF/ is used in subroutines STMMP, RUIDC, PURTI, SNAST, SCREEN, TRANSL, STIDR, and DIWPA.

Variable	Description
ISL	0: Use short form of message
	1: Use long form of message
IARS	Command code:
	0: Block
	1: Accept
	2: Reject
	3: Skip
	4: Altes
	5: Select
	6: Exit
	7: List
	8: Force
	9: Default
	10: Restart
	11: Backup
ISK	Number of scenes skipped
IAP	Area list pointer
UID	User ID number
IDB	Data base read flag
	99: data base has been read
	Other: data base needs to be read
NOR	Number of scenes processed
IAT	I-100 attach flag
	0: Need to ATTACH
	1: Do not ATTACH

TABLE 5.9-4 - COMMON BANK /DB/

/DB/ is used in subroutines STMMP, SNAST, SCREEN, TRANSL, STIDR and DIWPA.

Variable	Description
IOT	Array containing data base information concerning each search area or area of interest to be processed.

TABLE 5.9-5 - COMMON BANK /SUB/

/SUB/ is used in subroutines SCREEN, TRANSL, AND STIDR.

Variable	Description
X	Horizontal cursor position
Y	Vertical cursor position
REF	Reference image flag 0: Display scene 55: Display reference image
FAC	Enlargement scale factor
SCFC	Reduction scale factor
STB	Starting bit in data
STP	Starting pixel in data

5.9.1 SCREENING AND TRANSLATION MODULE MAIN PROGRAM, STMMP

This main program controls the processes of screening Area of Interest images of questionable quality and the translation of search area images to register each image with location control points in a corresponding reference image.

o Inputs

Except for a flag from a subroutine to select either the screening operation or the translation, no data are handled by this program itself.

o Outputs

Not applicable.

o Description

Subroutines are called to read a user identification code which selects a set of images for processing and to select individual area images from that set. Depending on the requirements of the selected images, a subroutine will be called to display the image for screening or to display it for translation. All operations interact with a user at the I-100 display terminal.

o Flow Chart

See figure 5.9-3.

o Subroutines Called

RUIDC	read user identification project code
SNAST	select next area file for processing
SCREEN	display image for visual quality inspection and accept/reject decision
TRANSL	display search area image and reference image for visual matching of position
COPYTF	forms one file from all transaction files
EXCDMS	updates the data base

ORIGINAL PAGE IS
OF POOR QUALITY

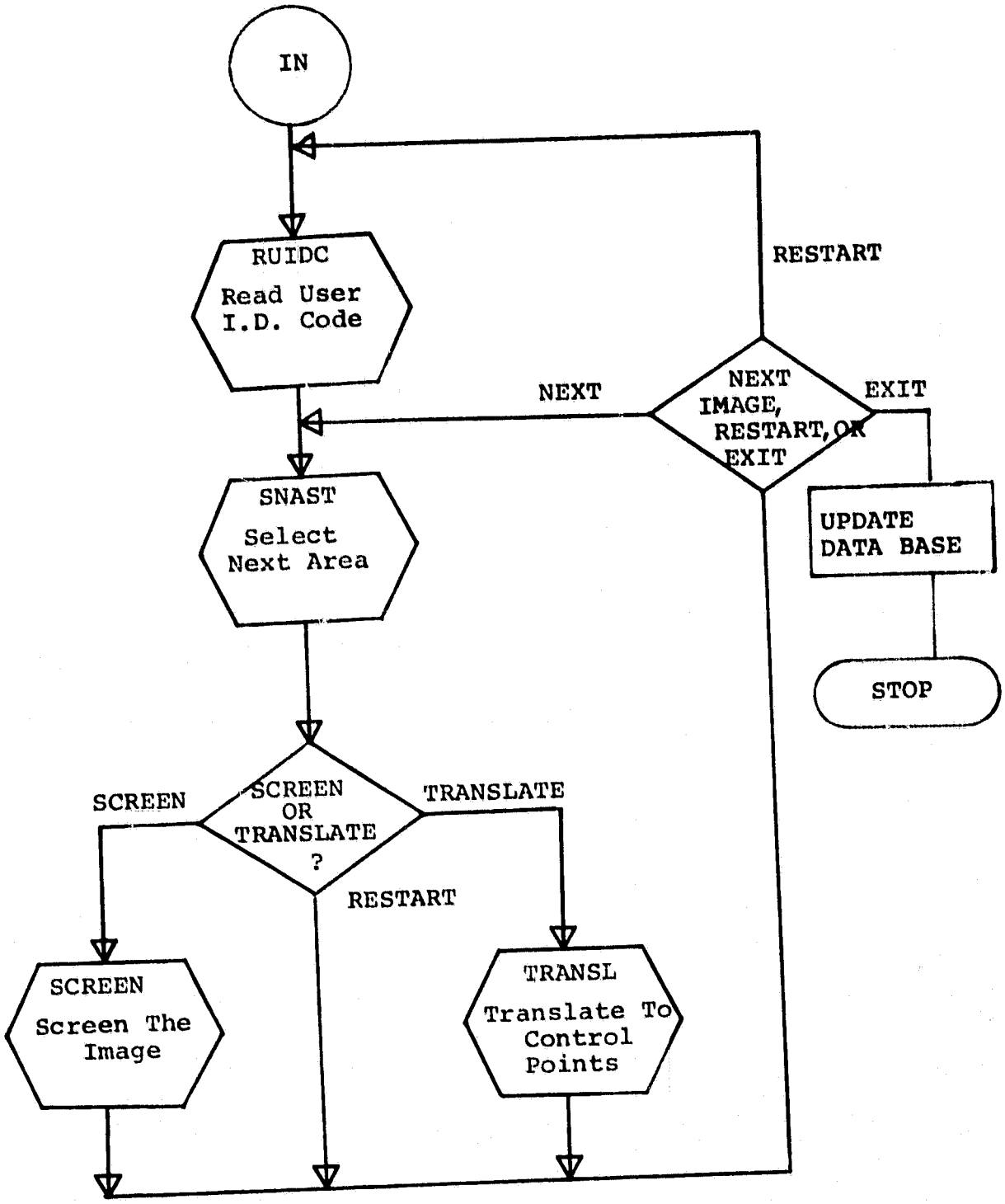

Figure 5.9-3.- Screening and translation module main program, STMMP.

5.9.2 EXHIBIT AND CHANGE DISPLAY WINDOW PARAMETERS, DIWPA (WD)

This routine gives the user the option to control displays. It allows changes of scale, position, channel selection, brightness, and contrast in the display windows for screening and registration images.

o Inputs

Calling argument WD - flag indicating which control point is having its default window parameter altered.

Display window number
Parameters for the given window
User changes in the form "parameter name = value"

o Outputs

Existing values exhibited to user
Updated values saved in memory
Flag returned in calling argument flag if user enters decision to reject, accept, or skip current area image

o Description

Existing display window parameter values are displayed for the user as shown in figure 5.9-4. By entering changes to those parameters the user can alter the scale, position, brightness, and contrast when the image is transmitted to the I-100 display hardware. Default parameter values are listed in figure 5.9-5. Decisions to accept, reject, or skip the current area are passed back to the calling program.

o Flow Chart

See figure 5.9-6.

o Subroutines Called

PURTI prompt user and read reply from keyboard

$

WINDOW 1	FULL AREA	0
DISPLAY POSITION		
LINE		0
RASTER		0
SIZE-DISPLAY		
NUMBER OF LINES		256
NUMBER OF RASTERS		256
SIZE-IN SOURCE FILES		
NUMBER OF LINES		117
NUMBER OF PIXELS		197
STATUS - MODIFIED		

SEARCH AREA

SOURCE	
START LINE	0
START PIXEL	0
BAND	0
REFRESH CHANNEL	1
BIAS	
BAND 4	-5.1
BAND 5	-5.1
BAND 6	-5.1
BAND 7	-5.1
GAIN	
BAND 4	3.1
BAND 5	3.1
BAND 6	3.1
BAND 7	3.1

Figure 5.9-4
Display Window Parameters

```
$
 WINDOW 0              CONTROL POINT     1
 DISPLAY POSITION
    LINE                                    0
    RASTER                                256
 SIZE-DISPLAY
    NUMBER OF LINES                       256
    NUMBER OF RASTERS                     256
 SIZE-IN SOURCE FILES
    NUMBER OF LINES                        64
    NUMBER OF PIXELS                       64
 STATUS - DEFAULT

                         REFERENCE                SEARCH AREA

 SOURCE
    START LINE                        0                0
    START PIXEL                       1                1
 BAND                                 1                2
 REFRESH CHANNEL                      5                2

 BIAS
    BAND 4                                   -5.1
    BAND 5                                   -5.1
    BAND 6                                   -5.1
    BAND 7                                   -5.1
 GAIN
    BAND 4                                    3.1
    BAND 5                                    3.1
    BAND 6                                    3.1
    BAND 7                                    3.1
 **  DO YOU WISH TO CHANGE REFERENCE (REFE) OR SEARCH AREA (SEAR)
VALUES?  KEY IN RESPONSE.
```

Figure 5.9-4 (Concluded)
Display Window Parameters

Figure 5.9-5

DISPLAY WINDOW DEFAULT PARAMETERS

Parameters	Default				
	Screen	Translate	Control 1	Control 2	Control 3
Display Position					
Line	16	0	0	256	256
Raster	0	0	256	0	256
Size - Display					
Number of lines	≤488*	≤256*	256	256	256
Number of rasters	≤512*	≤256*	256	256	256
Size - in Source File					
Number lines	(Values taken from image record in PC&S data base)		64	64	64
Number pixels			64	64	64
Source					
Start line	0	0-ref, 22-search area	Cursor position - 32 + offset of previous control point		
Start pixel	0	0-ref, 44-search area	"		
Band	1,2,3,4	1,2,3,4 (search area)	Reference and search area control images: single band taken from reference image header		
Gain and Bias	Taken from image file headers	Copy for screen column			

*Allowance will be made for lines at top and bottom edges of I-100 image channels which are not visible because of monitor retrace time. Also, either number of lines or number of rasters used on display will default to value less than full window size if source image is not square, to maintain proportions of image.

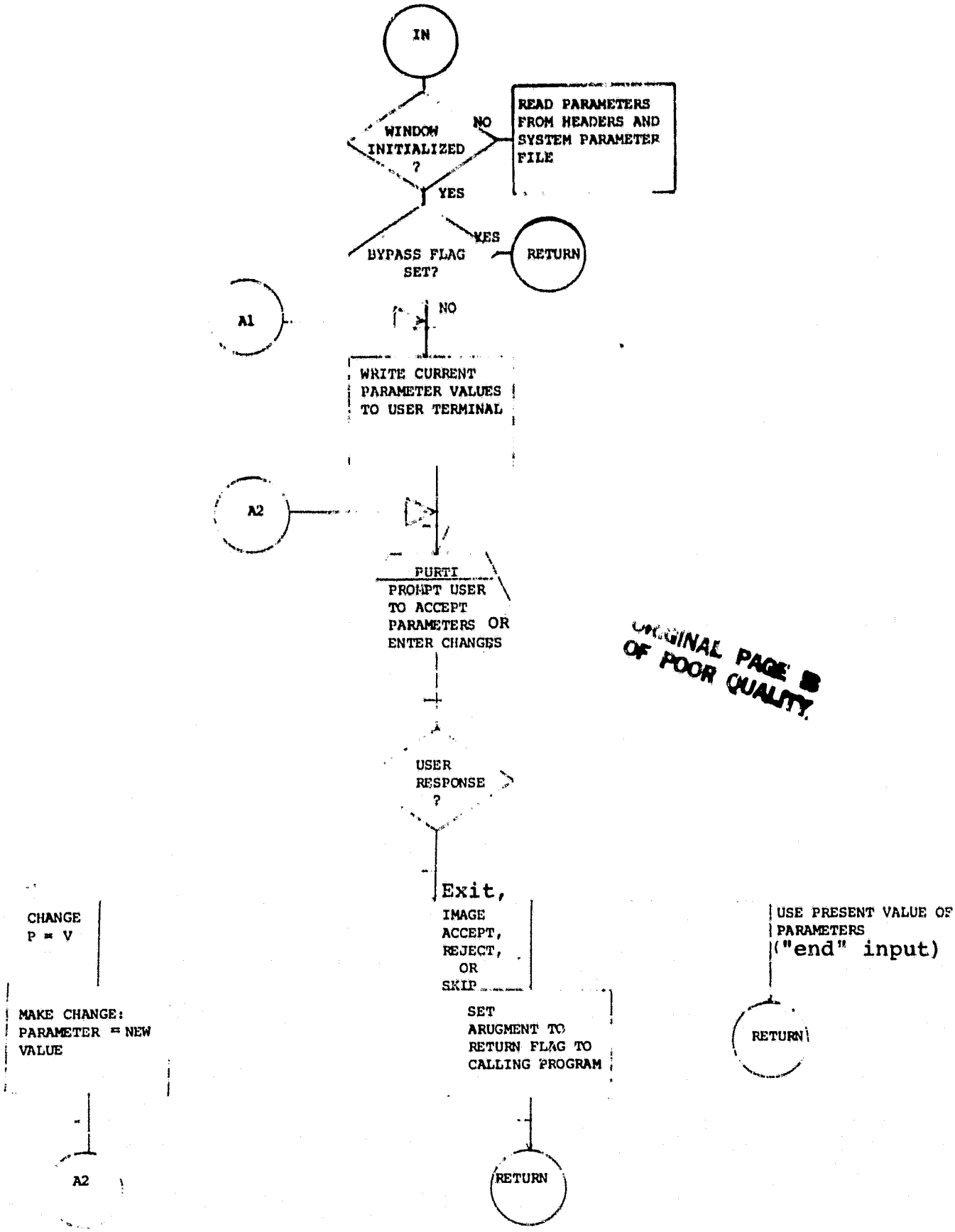

ORIGINAL PAGE IS OF POOR QUALITY

Figure 5.9-6.- Exhibit and Change Window Parameters, DIWPA

5.9.3 JULIAN DATE TO CALENDAR DATE CONVERSION, JUL

This routine converts a Julian date to a calendar day.

o Inputs

A Julian date in the form YNNN (year and day).

o Output

A calendar date year, month, day.

o Description

The Julian date is converted using standard procedures.

o Flow Chart

Not applicable.

5.9.4 CALENDAR TO JULIAN DATE CONVERSION SUBROUTINES, JULIAN

This routine converts a calendar date to a Julian date.

o Inputs

A calendar date in the form year, month, day.

o Output

A Julian date in the form YNNN (year and day)

o Description

The calendar date is converted using standard procedures.

o Flow Chart

Not applicable.

5.9.5 PROMPT USER AND READ TERMINAL KEYBOARD, PURTI (ICMD,IVAL)

This routine prompts a terminal user with a long or short version of a message, depending on a flag mode setting, and reads the user's response. Certain common user commands are carried out within this routine.

o Inputs

Calling arguments: ICMD - prompting message number
IVAL - response to message

Short or long form of the message from a disk file of messages
Entry is from user keyboard

o Outputs

Message to user terminal
User input in message buffer
Changed long/short flag in certain cases

o Description

The long or short form of the numbered message is fetched and transmitted to the user terminal. A line is read from the user and the first character is examined. The characters are examined to see if they are a command that can be carried out here: turn the long/short flag on or off, change the control character, repeat the prompting message in its longer form, close all files and terminate the processor, or other command. The user is allowed (but not required) to omit the control character (-) in his reply.

o Flow Chart

See figure 5.9-7.

o Subroutines Called

None.

ORIGINAL PAGE IS
OF POOR QUALITY

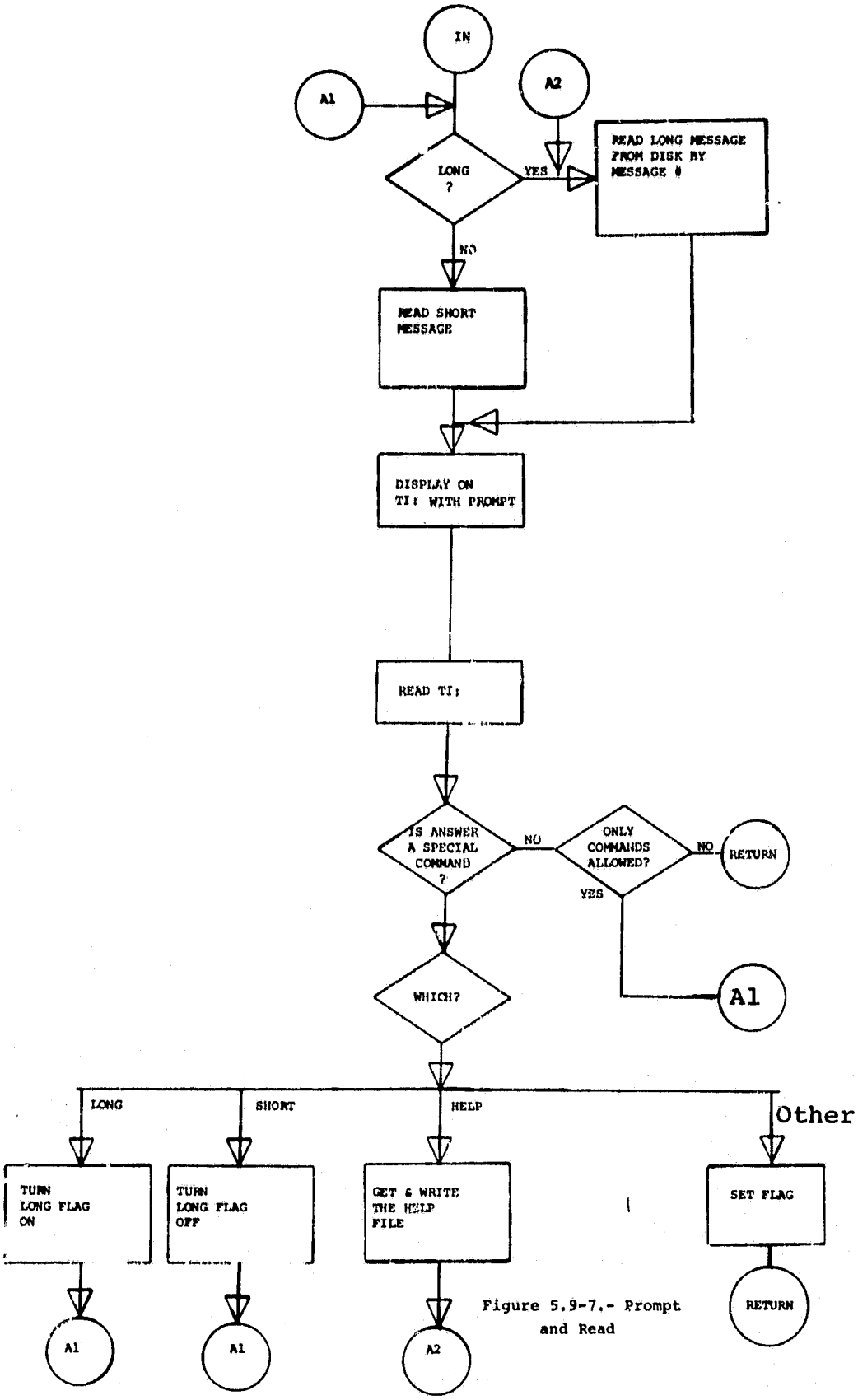

Figure 5.9-7.- Prompt and Read

5.9.6 READ USER IDENTIFICATION CODE, RUIDC

This routine reads a two-character user identification code. That code will be used to identify a set of areas of interest that belong to a particular project or user group.

o Input

Two character identification code from user at terminal.

o Output

Data base accession number prefix.

o Description

A two character identification code is input from the terminal. The routine checks the code to insure it is a number in the range of 1 to 20.

o Flow Chart

See figure 5.9-8.

o Subroutines Called

PURTI prompt user and read terminal keyboard.

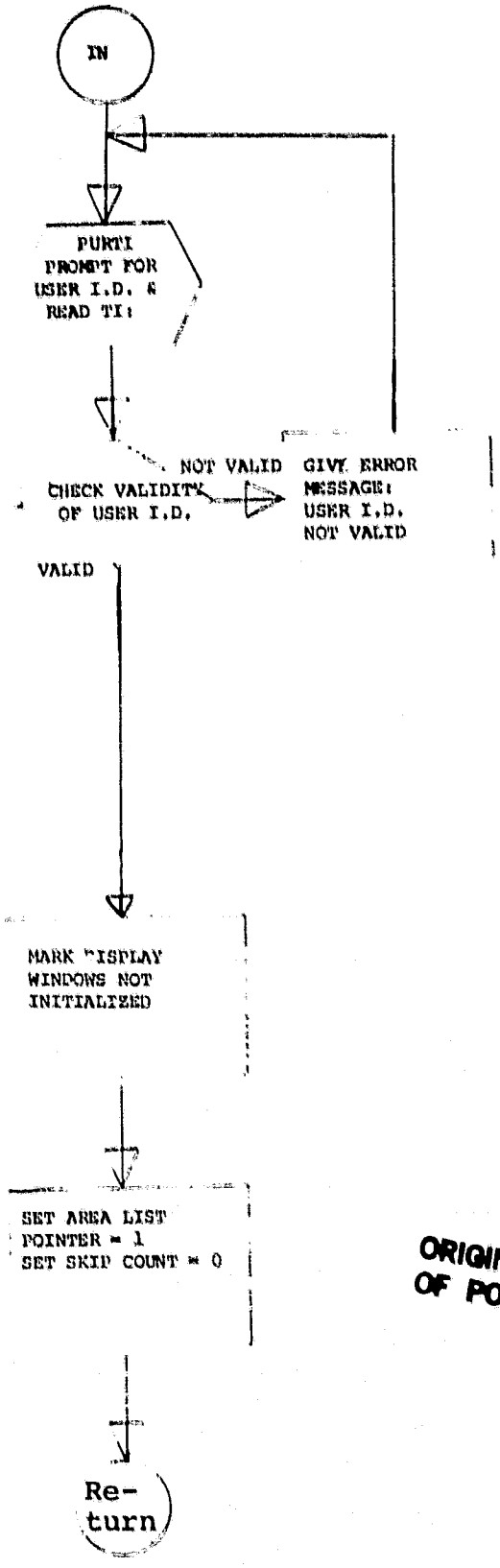

ORIGINAL PAGE IS
OF POOR QUALITY

Figure 5.9-8.- Read User ID Code (RUIDC)

5.9.7 DISPLAY AREA AND ACCEPT OR REJECT, SCREEN

This routine provides the capability to interactively inspect area images of doubtful quality and accept or reject them.

Inputs

Area of interest name

User keyboard inputs

Outputs

Messages and prompts to user terminal

Accepted or rejected flag to PC&S data base (via command file to LIMS)

Description

A previously selected area of interest image is displayed and the user is asked to accept or reject it. Before making the decision, he can alter the display however he wants; e.g. by changing scale or contrast. He can also choose to postpone the decision and skip the given area without marking it accepted or rejected.

Flow Chart

See figure 5.9-9.

Subroutines Called

DIWPA	exhibit and change parameters of the display window
PURTI	prompt user and read reply from keyboard
STIDR	display image on I-100

ORIGINAL PAGE IS
OF POOR QUALITY

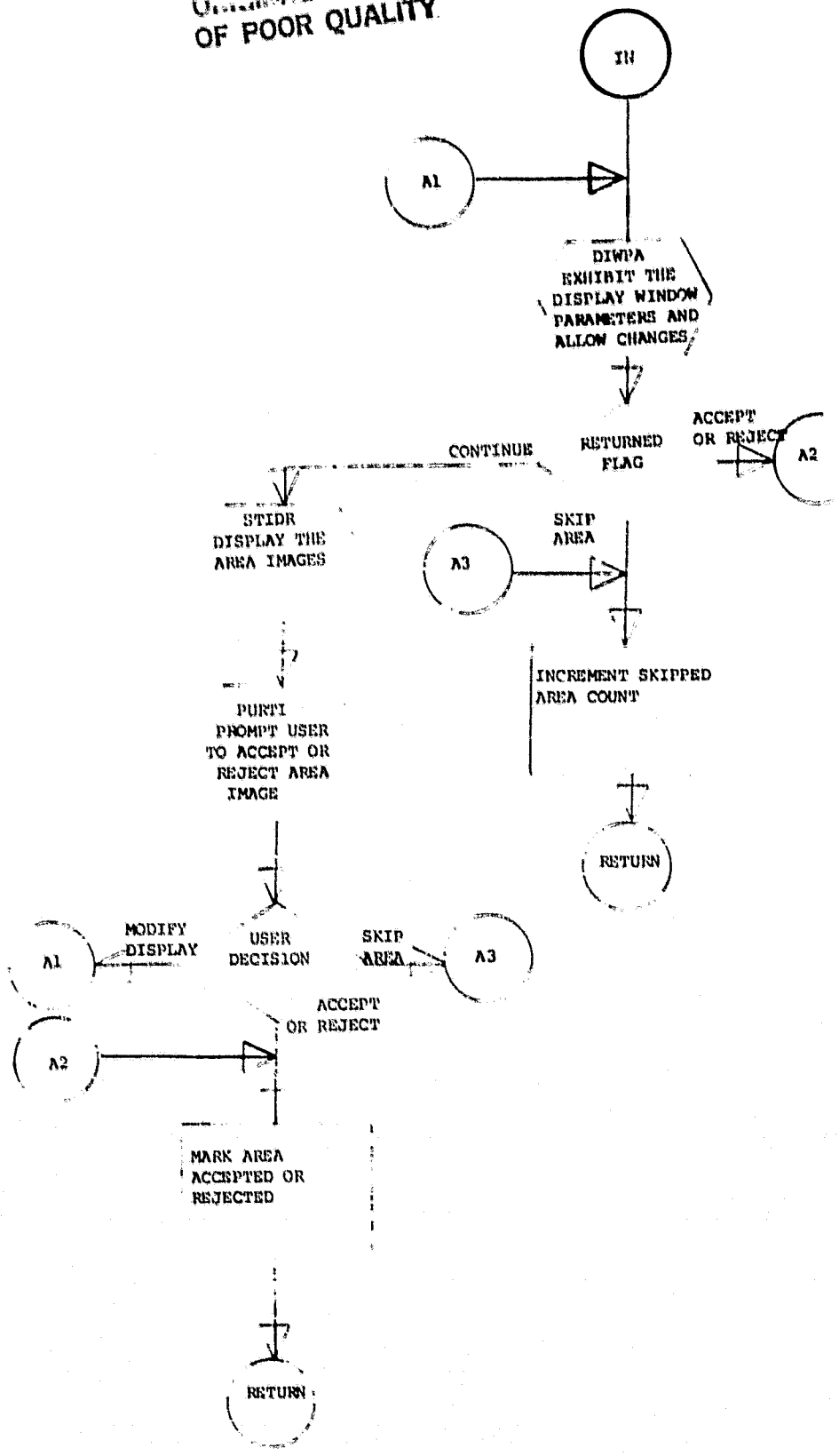

Figure 5.9-9.— Display Area and Accept
or Reject, SCREEN

5.9.8 SELECT NEXT AREA FOR SCREENING OR TRANSLATION, SNAST (IST)

This routine allows the user to take areas for screening or registration in their natural order, or to force selection of a particular area named by the user.

o Inputs

Calling argument: IST Flag by screening (6) or translation (3).
A disk file list of all area images on the disk for processing.
User entries from terminal keyboard.

o Outputs

The choice of the next area to be processed through screening or translation.
Required messages and prompts to user.

o Description

This program provides the capability for an automatic sequence of processing areas by maintaining a pointer to the list of areas already offered to the user as candidates for processing and a count of areas which the user chooses to skip. On any iteration through this routine, the user can choose to override the automatic choice by selecting an area by number from the report generated by LIMS which lists all area image files available.

o Flow Chart

See figure 5.9-10.

o Subroutines Called

PURTI prompt user and read terminal keyboard.
EXCMDS data base interface to obtain list of available search area images.

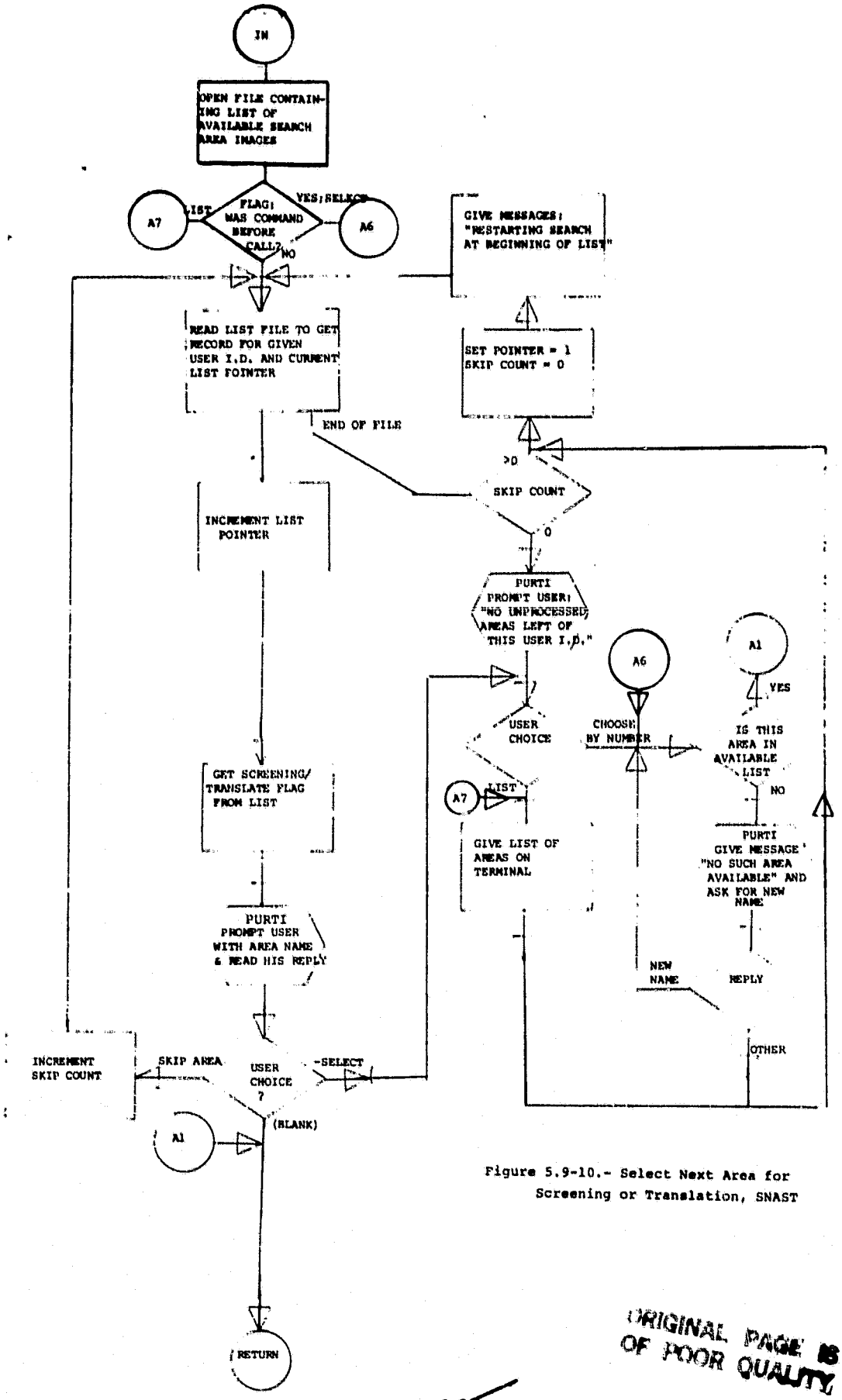

Figure 5.9-10.- Select Next Area for Screening or Translation, SNAST

ORIGINAL PAGE IS OF POOR QUALITY

5.9.9 SCREENING OR TRANSLATION IMAGE DISPLAY ROUTINE, STIDR (CP)

This routine displays images for screening or translation. It reads a reference image, area of interest file, or search area file and loads an image to a selected window on the I-100 display.

o Input

Calling Argument CP - control point number

An image file name; the characteristics of that file (numbers of lines, pixels, and channels, and their gains and biases); the image data from the file; the sign, position and channel number(s) of a rectangular area from the file to be displayed; and the size, position, and refresh memory number(s) of the corresponding window on the display screen.

o Output

An image is displayed on the I-100 display screen.

o Description

The image data are read from the file and manipulated in brightness and geometry. Gain and bias application gives an image of appropriate contrast. Depending on the relative size of the source image rectangle and the display window, the image will be either compressed by skipping pixels and lines, or zoomed by replicating lines and pixels.

When doing translation, the window parameters may indicate display of more lines and/or pixels than actually exist on the source image file. This will occur when working with control points near the edge of the image. The situation must be detected so that this routine will not cause abnormal termination because of trying to read too long a record or records after end-of-file or before beginning of file. Non-existent image parts should be forced to black by creating appropriate fill data.

- **Flow Chart**

See figure 5.9-11.

- **Subroutines Called**

Fast video read and I-100 load utilities.

ORIGINAL PAGE IS
OF POOR QUALITY

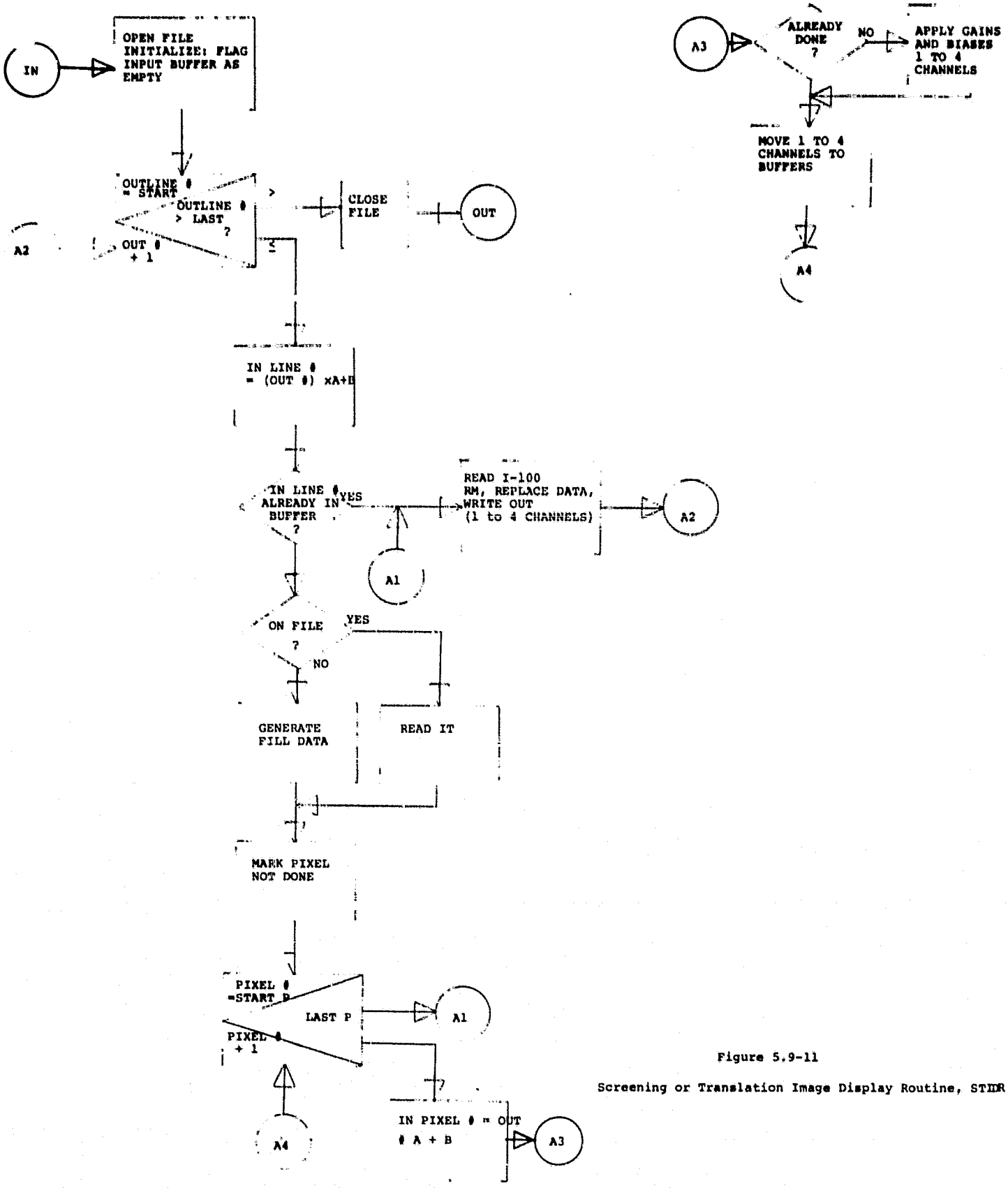

Figure 5.9-11

Screening or Translation Image Display Routine, STIDR

5.9.10 DISPLAY CONTROL POINTS AND TRANSLATE IMAGES, TRANSL

This routine translates images into registration with a reference image. It displays a previously selected search area, reads control point locations from the cursor position set by the user, and accepts or rejects the search area image depending on agreement of control points within tolerances.

o Inputs

Search area and reference image data

User keyboard and cursor position entries

o Outputs

Image displayed on I-100 for visual screening and control point positioning

Accept/reject flag to PC&S data base via LIMS command file

o Description

The full search area image will be displayed, from which the user selects two or three control point subareas. Those subareas are displayed in enlarged ("zoomed") scale, on which the user can position the cursor to select corresponding control points in both a reference image and the search area. If the offsets for any two control points match it will be accepted; otherwise it will be rejected. The user can override that decision if he desires. Allowance is made to alter display window parameters for any special cases (e.g., very large search areas) where the default window parameters do not provide an image of proper scale or contrast.

o Flow Chart

See figure 5.9-12.

5.9.11 LONG MESSAGE FILE, DSCWRT

This program produces the file SCRNTR.DT1 from which the subroutine PURTI reads the long message forms. The file produced is a direct access, formatted file with a 256 byte record size.

5.9.12 SHORT MESSAGE FILE, DSHORT

This program produces the file SCRNTR.DT2 from which the subroutine PURTI reads the short message forms. The file produced is a direct access, formatted file with a 256 byte record size.

5.9.13 HELP FILE, HELP

This program produces the file SCRNTR.DT4 from which the subroutine PURTI reads the function of each command response. The file is a standard formatted file.

5.9.14 DEFAULT WINDOW PARAMETERS PROGRAM, DEFAULT

This program produces the file SCRNTR.DT3 which contains the default window parameters for the I-100 image. The file is read by the subroutine DIWPA. The file is unformatted.

ORIGINAL PAGE IS
OF POOR QUALITY

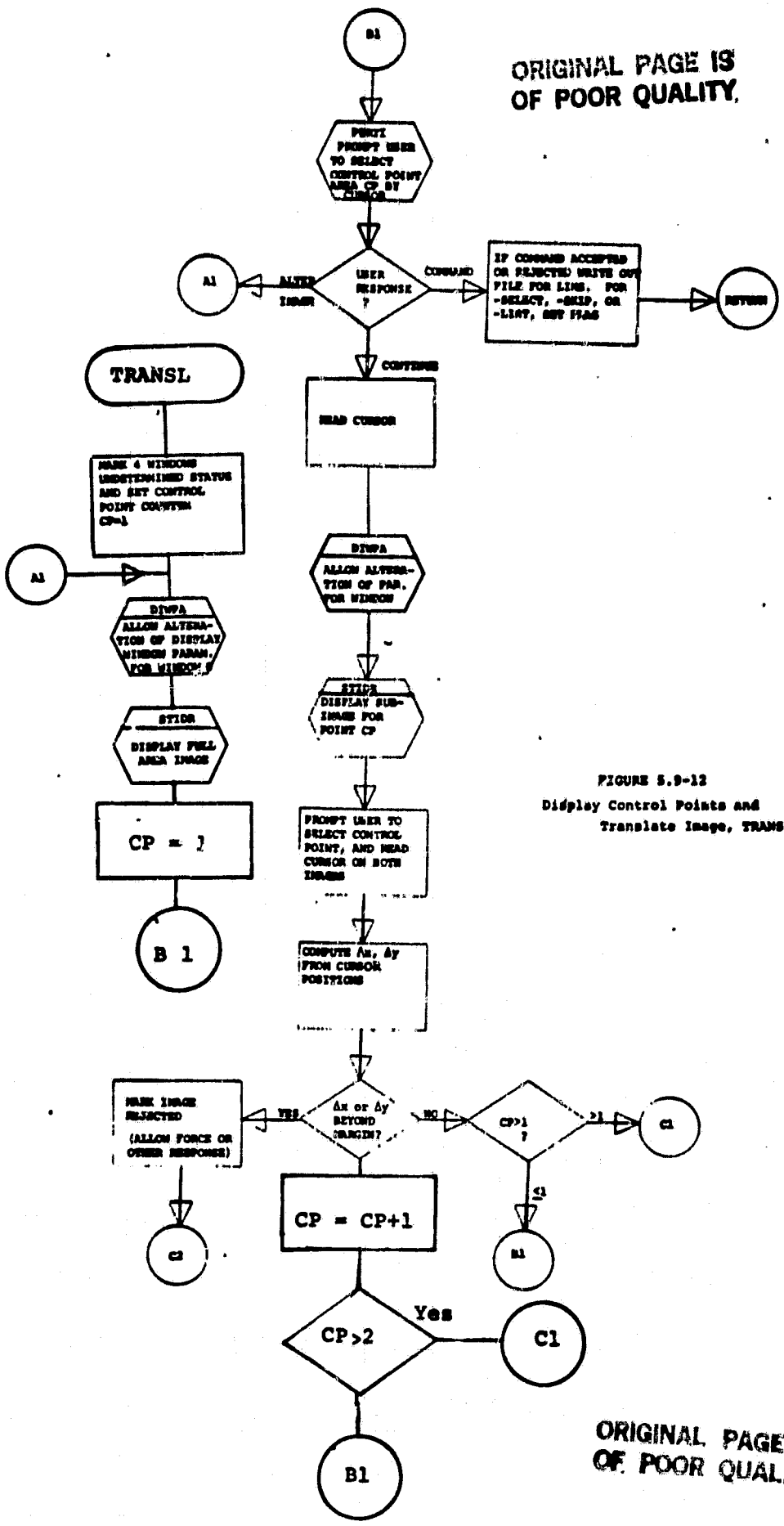

FIGURE 5.9-12
Display Control Points and
Translate Image, TRANSL

ORIGINAL PAGE IS
OF POOR QUALITY

ORIGINAL PAGE IS
OF POOR QUALITY

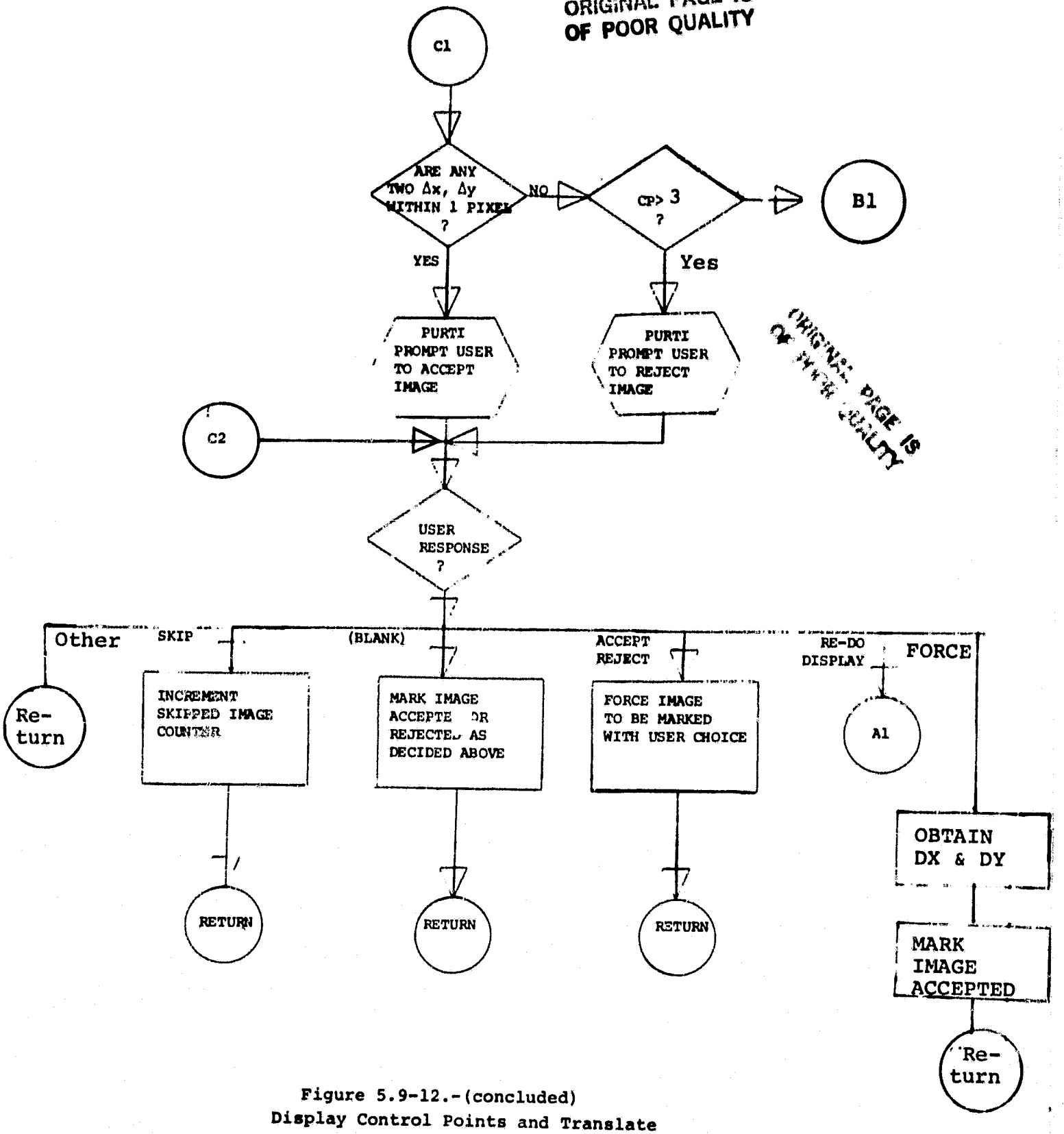

ORIGINAL PAGE IS
OF POOR QUALITY

Figure 5.9-12.-(concluded)
Display Control Points and Translate
Image, TRANSL

o **Subroutines Called**

DIWPA alter display window parameters

STIDR display image data on I-100

PURTI prompt user and read responses from terminal keyboard

I-100 utilities to read cursor position.

5.10 CCT PROCESSOR, CCTGEN

CCTGEN is the CCT processor. This module transfers areas of interest from disk to tape in Universal Image Format. The main routines comprising this module are shown here:

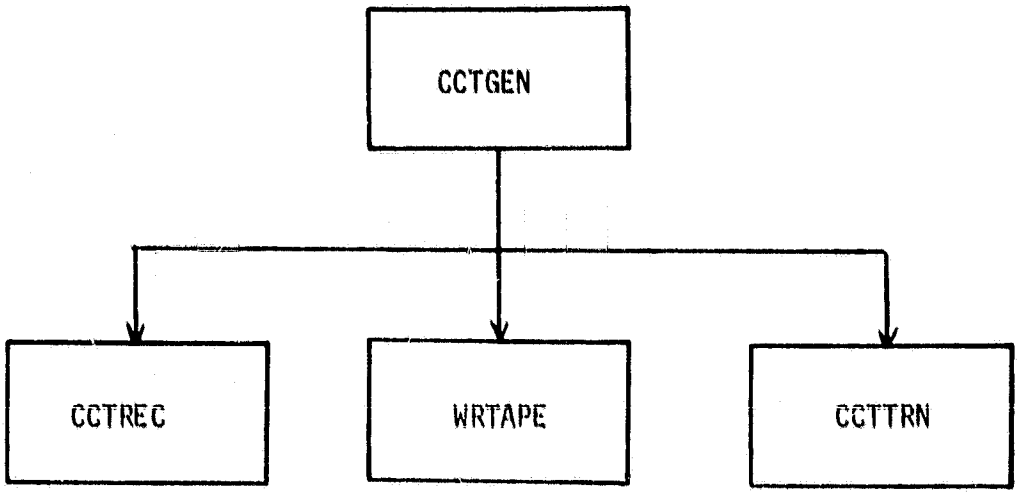

CCTGEN is an interactive program designed to be run from a demand terminal. The user prompts displayed at the terminal are self explanatory. However, the user must know the User ID to be used for the run and the run option desired for the run:

1. Output all areas of interest for all user ID's.
2. Output all areas of interest for current user ID.
3. Output only areas of interest requested.
4. Exit

Certain information of a temporary nature is displayed on the screen. The CCT tape label is displayed. In addition the site number and user ID associated with each file of the CCT is displayed.

Two pre-existing disk files, which are not related to the PC&S data base, are used in the execution of the program:

CCTGEN.REC - This is the recovery file and contains two entries: the recovery flag, NRCOV, and the CCT number, CCTNO. If the value of the recovery flag is greater than zero, the previous run of CCTGEN did not terminate normally and the current run is in the recovery mode. CCTNO is used to increment the CCT sequence number for each run during a calendar day.

CCTHED.DAT - This file consists of one 3060 byte record and contains data for the header record of the CCT. Its primary purpose is to save a copy of the CCT header record for use on continuation reels.

Four command files are used for communication with LIMS:

CCTGEN.CM1	For user option 1
CCTGEN.CM2	For user option 2
CCTGEN.CM3	For user option 3
CCTGEN.CM4	To update the data base

5.10.1 GENERATE CCT, MAIN PROGRAM, CCTGEN

The main program of the CCT processor is CCTGEN.

5.10.1.1 Input

/CCT/	CCTDAT	CCT date
	CCTNO	CCT number
	MTXTFG	CCT tape device
	DRIVE	CCT tape drive
	IFILE	CCT file number
	IOPT	User processing option
	RECFLG	Recovery flag
/CDATA/	SEQNUM	CCT sequence number
	SITE	Site number
	BACT	Bands active
	COLOR	Color
	CLCVR	Cloud cover
	DATAQ	Data quality
	AILAT	AI latitude
	AILONG	AI longitude
	FPFLG	Film flag
	DATEX	Time & date of last update

ACQDAT	Acquisition date
AOFI	Array of site numbers
BANDS	Number of bands or channels of data
BIAS	Bias
DEVICE	Disk device number
DLIN	Number of lines in border area
DPIX	Number of pixels in border area
GAIN	Gain
IDIN	User ID input by user
LINES	Number of lines in area of interest
LTRANS	Number of lines translated
NSL	Number of lines in search area
PIXELS	Number of pixels in area of interest
PTRANS	Number of pixels translated
STAR	End of data flag on report file
TPPC	Pixels per channel in search area
USERID	User ID from report file

5.10.1.2 Output

/CCT/	CCTNO	CCTNO
	MTXFFG	CCT tape device
	DRIVE	CCT tape drive
	IFILE	CCT file number
	IOPT	User processing option

/CDATA/	SEQNUM	CCT sequence number
	SITE	Site number
	NIDB	Name of non-image data file
	BACT	Bands active
	COLOR	Color
	CLCVR	Cloud cover
	DATAQ	Data quality
	AILAT	AI latitude
	AILONG	AI longitude
	FPFLG	Film flag
	DATEX	Time and date of last update
	GAINB	Array of gains and biases

IB	Beginning byte number in IBYT
IBYT	Output data array
IE	Number of bytes to output from IBYT
IMDB	Name of image data file
NCHAN	Number of channels of data
NIDB	Name of non-image data file
NRCOV	Recovery flag
T	CCT logical unit number
Tape label	A tape label is displayed

5.10.1.3 Description

Processing is begun by interactive communication with the user/operator. CCTGEN will display prompts for user ID, for CCT device and drive number, the label to be placed on the CCT, and a prompt for the option to output site data for all user ID's, site day for the current user ID only, or data for site numbers specified by the user. Communication is established with LIMS through a command file, CCTGEN.CM, 1,2,3,4, so that LIMS may select those site numbers whose data is eligible for output and to return the information necessary in a report file, CCTGEN.RP1, sorted by user ID.

One entry will be returned in the report file for each site number to be output. For each entry read, CCTGEN calls WRTAPE to write the header record and proceeds to retrieve the image data. These data are stored in 512 word blocks. CCTGEN retrieves as many full lines of data at each read that will fit in the buffer, consistent with the requirement that each read must contain an integral number of blocks. The data are passed to WRTAPE one channel at a time. If the number of pixels in a line of data exceeds the buffer size, then only one channel of data is processed per read.

When the last channel of data for one site has been output to tape, an end of file mark is written on the tape, and a message is displayed identifying the data on this file. Subroutine CCTTRN is called to write a transaction file and to update the recovery file, CCTGEN.REC.

The procedure is repeated until all entries in the report file have been processed. When all the sites for one user ID have been processed, a second end of file mark is written on the tape. If sites for a different user ID remain to be processed, a message is displayed to mount another tape and specifying the new tape label.

When the entries in the report file have been exhausted, subroutine COPYTF is called to consolidate the transaction files. LIMS is then utilized to update the data base. At his point, CCTGEN will terminate.

If CCTGEN starts out in the recovery mode, the program will start processing at the beginning of the data file being processed at the time the abort occurred. The user will not be prompted for an option since the program will use the option from the aborted run.

5.10.1.4 Flow

The flow chart for CCTGEN is presented in figure 5.9.1.

ORIGINAL PAGE IS
OF POOR QUALITY

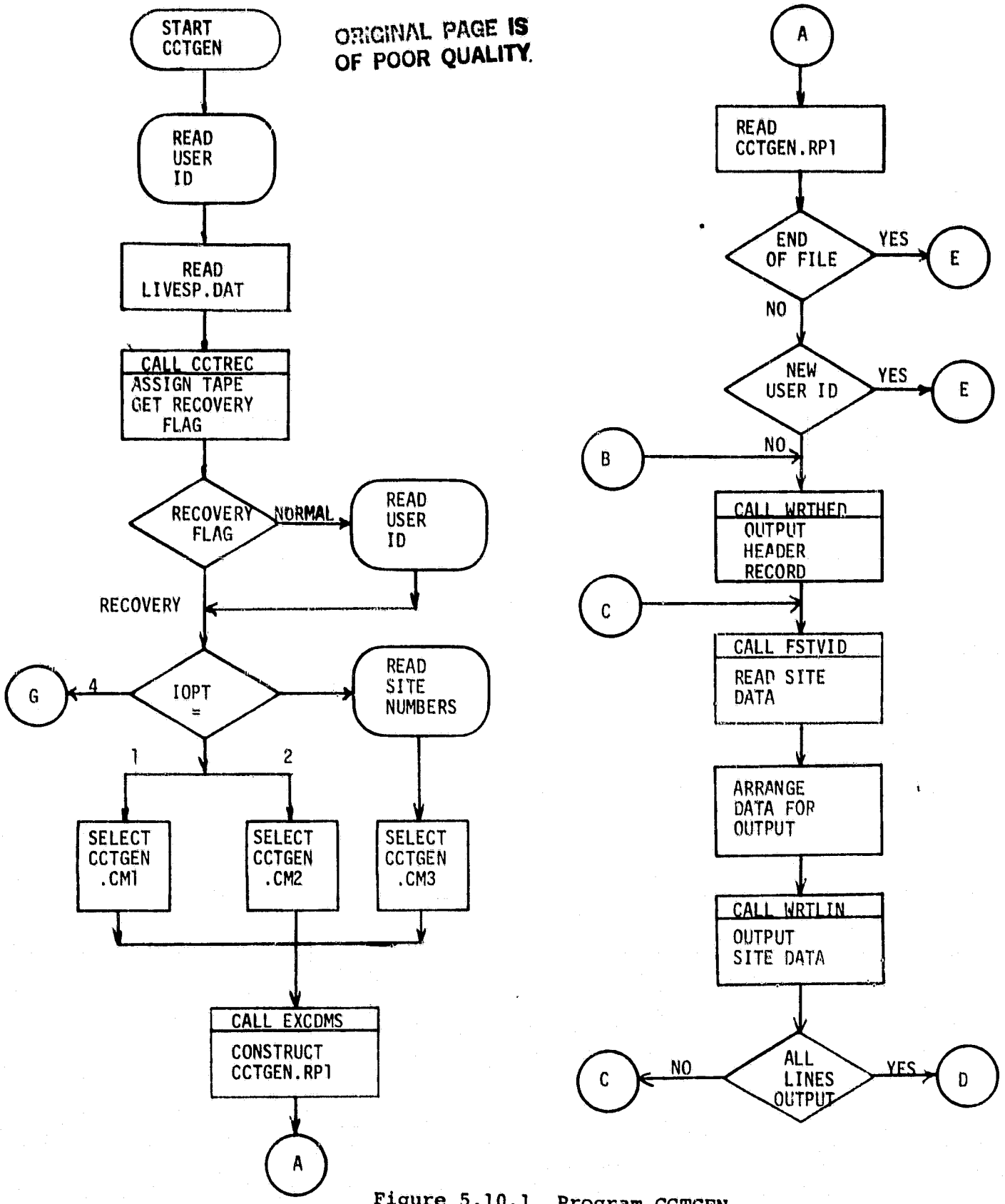

Figure 5.10.1 Program CCTGEN

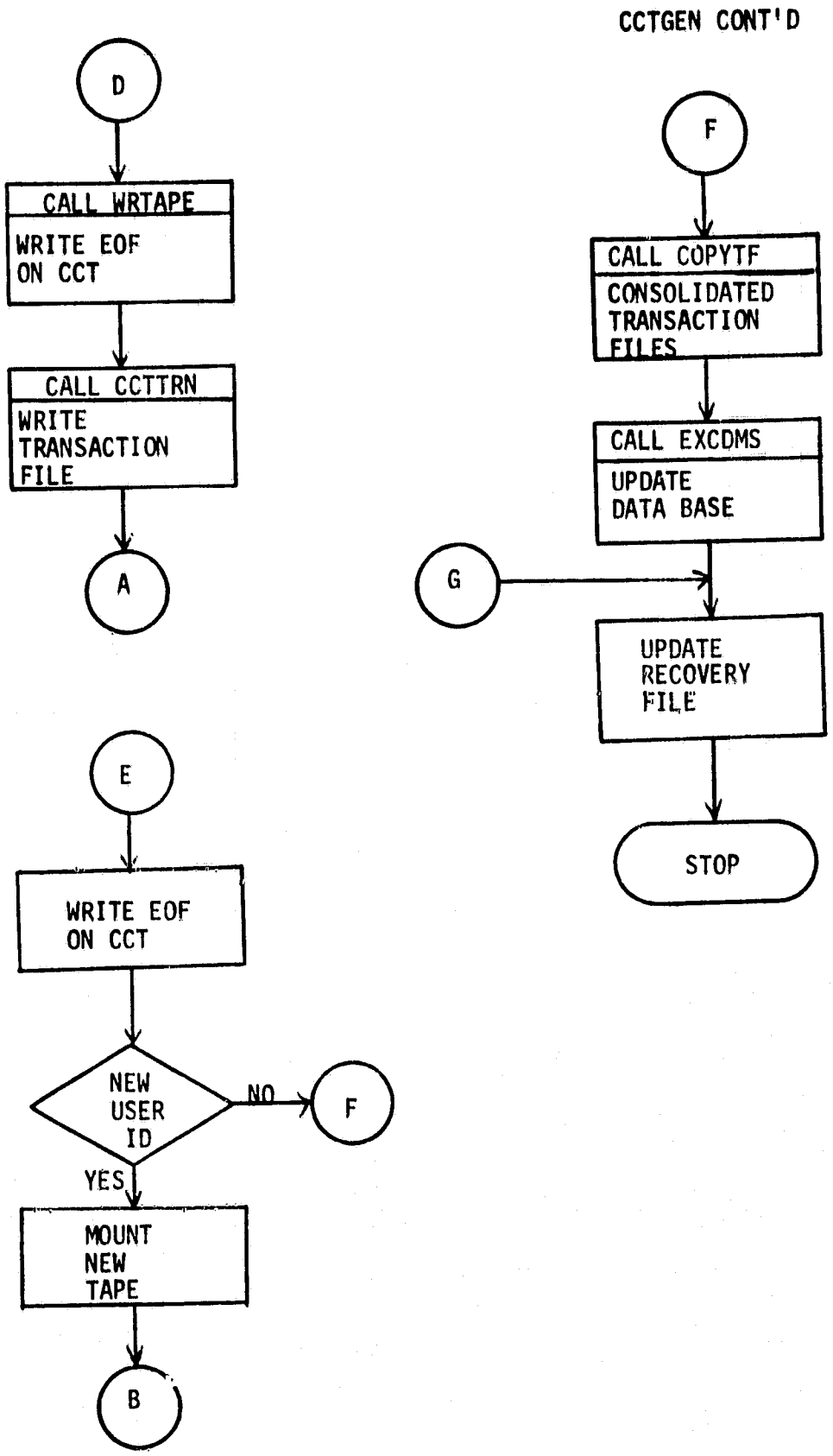

Figure 5.10.1 Cont'd

5.10.2 CCT RECOVERY AND TAPE ASSIGNMENT SUBROUTINE, CCTREC

5.10.2.1 Input

/CCT/ See 5.10.1.1

/CDATA/ SEQNUM CCT sequence number

TFILE Array containing name of transaction file.

5.10.2.2 Output

/CCT/ See 5.10.1.1

/CDATA/ SEQNUM CCT sequence number

5.10.2.3 Description

The purpose of CCTREC is to handle recovery from an abort during the previous run of CCTGEN. The recovery file, CCTGEN.REC, contains a recovery flag, NRCOV, and the last value for CCTNO, the CCT number. If NRCOV is negative, the previous run terminated normally. In this case CCTNO is used to determine the sequence number of the CCT. The sequence number starts at one (1) each day and is incremented for each subsequent run. The maximum value permissable for the sequence number is 9. The label to be used for the CCT is displayed to the user.

If the recovery flag is positive, CCTGEN is in the recovery mode. The last transaction file is read to determine which CCT is to be remounted and the number of files to skip to position the tape to continue the previous run. The CCT lable is displayed to the user.

5.10.2.4 Flow

The flow chart for CCTREC is presented in figure 5.10.2.

ORIGINAL PAGE IS
OF POOR QUALITY

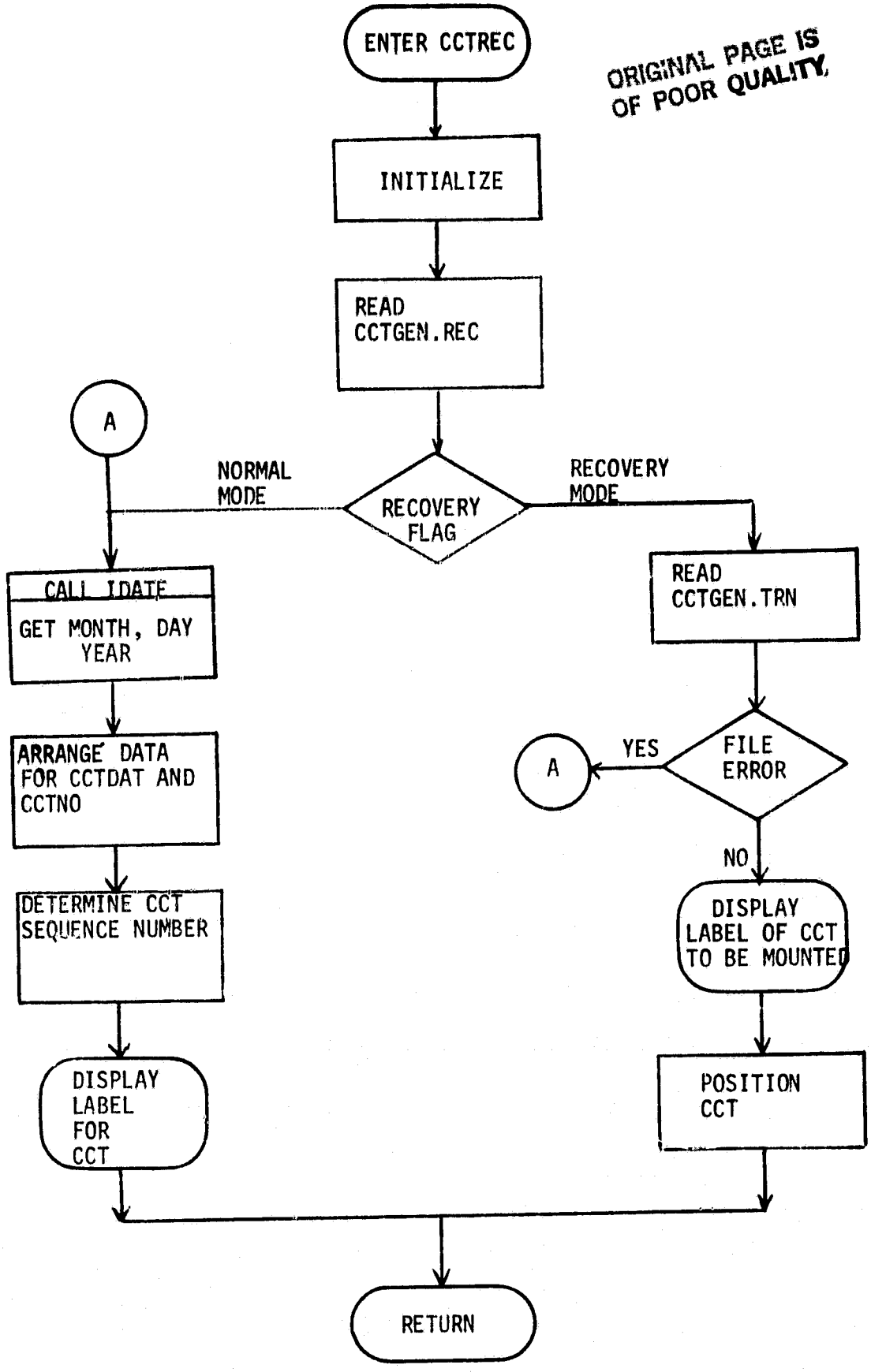

Figure 5.10.2 Subroutine CCTREC

5.10.3 WRITE CCT TRANSACTION FILE SUBROUTINE, CCTTRN

5.10.3.1 Input

ACQDAT	Acquisition date
CCTDAT	CCT date
CCTNO	CCT number
IFILE	CCT file number
IOPT	User processing option number
NCHAN	Number of channels of data
SITE	Site number
TFILE	Array containing name of transaction file
USERID	User ID

5.10.3.2 Output

ACQDAT	Acquisition date
CCTDAT	CCT date
CCTNO	CCT number
IFILE	CCT file number
IOPT	User processing option
NCHAN	Number of channels of data
SITE	Site number
USERID	User ID

5.10.3.3 Description

The purpose of CCTTRN is to write a transaction file each time the data for a site is processed. The transaction files will be used to update the PC&S data base. The variables IFILE and IOPT are not required for the transactions but are output to the file in case a recovery run becomes necessary.

CCTTRN also updates the recovery file, CCTGEN.REC, to indicate that the next run should be in recovery mode if the current run does not terminate normally.

5.10.3.4 Flow

Not applicable.

5.10.4 WRITE UNIVERSAL TAPE SUBROUTINE, WRTAPE

5.10.4.1 Input

The input to this subroutine is through a Common Block and through calling arguments in two entry points.

COMMON/CDATA/ See 5.10.1.2

ENTRY POINT WRTHED (LUN, MTUNIT, DRIVE, NCHAN, NPIXS, IERR, IRWND)

LUN	CCT logical unit number
MTUNIT	CCT tape device
DRIVE	CCT tape drive
NCHAN	Number of channels of data
NPIXS	Number of pixels per channel
IERR	Output error flag: zero means no error
IRWIND	Rewind and assign, CCT indicator. Set to 1 indicates tape rewind desired. Must be set to 1 on first call or caller must do his own CCT assignment.

File:	CCTHED.DAT	Data for CCT header record
File:	-------.SAN	Data for CCT header record

ENTRY POINT WRTLIN (LUN, INBUF, IB, IE, IEOF, IERR)

LUN	CCT logical unit number
INBUF	Buffer containing pixels to be output INBUF(1) = 1st pixel INBUF(N) = last pixel
IB	Beginning pixel in INBUF
IE	End pixel in INBUF
IEOF	End of file indicator = 0 More data = 1 Write EOF on CCT = 2 WRITE second EOF on CCT
IERR	Output error flag. Zero means no error

5.10.4.2 Output

The output from WRTAPE is a CCT in Universal Image format.

IERR - Flag to indicate the status from the tape write.

5.10.4.3 Description

WRTAPE accepts a call to entry point WRTHED to build a universal tape header. Basic header data is retrieved from file CCTHED.DAT and data pertaining to the specific area of interest is retrieved

from the 'SAN' data file. The header buffer is filled and output to tape. The buffer is also stored in file CCTHED.DAT.

WRTAPE then accepts at least one call per channel per line to build the ancillary and image data set records. The type of processing performed is based on the number of pixels per channel and produces one of three basic kinds of tapes:

Type 1) NPIXS $\leq$2298 This tape will contain all pixels for one channel in one physical record and will contain at least one channel in the ancillary portion of the data set.

Type 2) 2298 < NPIXS < 2998 This tape will contain all pixels for one channel in one physical record, but there will be no image data in the ancillary portion.

Tye 3) NPIXS > 2998 This tape will have multiple physical records to contain all the pixels for one channel, and there will be some image data in the ancillary portion.

A call to entry point WRTHED establishes all of the parameters needed for writing image data records, encodes header information and writes the header to tape. WRTLIN arranges the image data in the internal buffer, inserts record counters and scan line numbers and outputs the data records to tape.

In an end-of-tape mark is sensed, the tape is rewound, a message is displayed to replace the tape, the header is read from file CCTHED.DAT and written on the new reel of tape, and the program continues.

5.10.4.3 Flow

The flow diagram of subroutine WRTAPE is presented in Figure 5.10.4.

ORIGINAL PAGE IS
OF POOR QUALITY

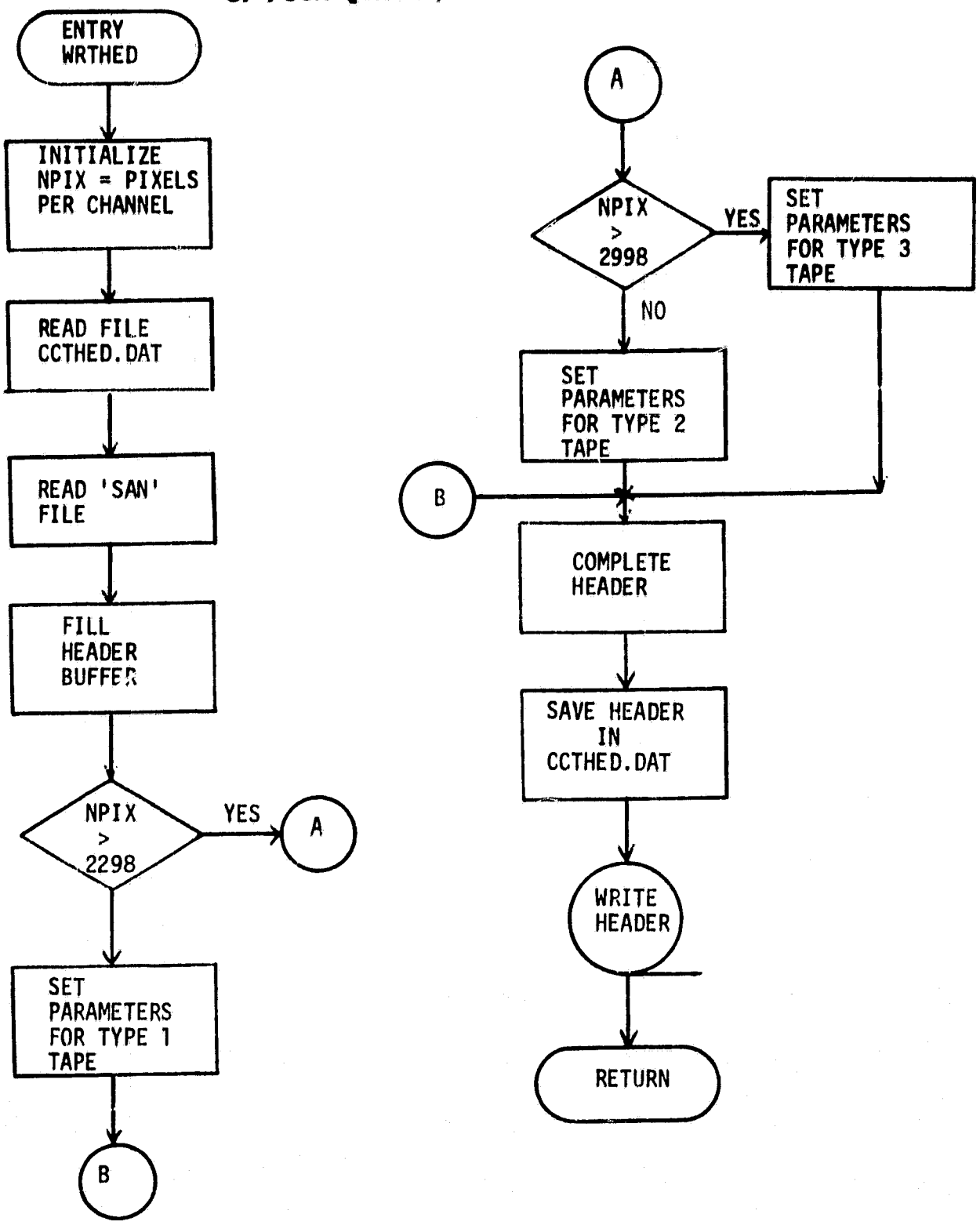

Figure 5.10.3 Subroutine WRTAPE

ORIGINAL PAGE IS
OF POOR QUALITY

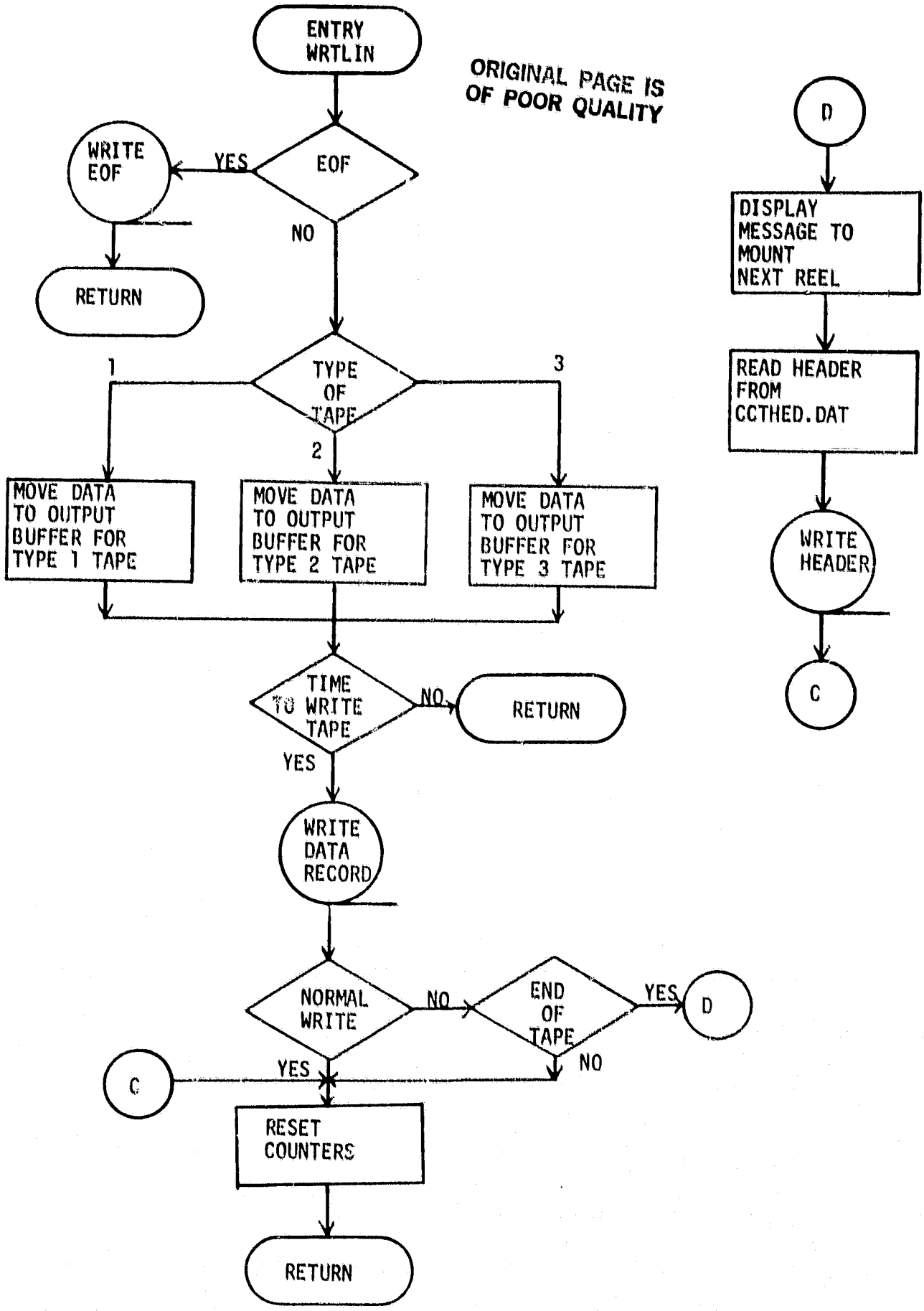

Figure 5.10.3 Continued

5.10.5 CONVERT CALENDAR DATE TO JULIAN DATE, JULIAN

This is a utility routine to convert the month, day and year into the day of the year or Julian date.

5.10.6 CONVERT JULIAN DATE TO CALENDAR DATE, CALNDR

This is a utility routine to convert the Julian date to month and day.

5.11 ARCHIVE UPDATE PROGRAM

The archive data base (also called the master data base) is updated at the end of each cycle of processing by having LIMS transfer all the Scene Description Records and the Acquisition Description Records from the daily (PC&S) data base into it. Since the Area of Interest Description Records came originally from the archive data base and are not changed during processing, they do not need to be transferred.

Thus the archive data base will contain a history of all LIVES processing done since it was initialized. It may be used for future reports which need to span more than one processing cycle. The flow of the archive update batch run (contained in file DB0:[333,33] ARCUPD.BIS) is shown in figure 5.11-1.

ORIGINAL PAGE IS
OF POOR QUALITY

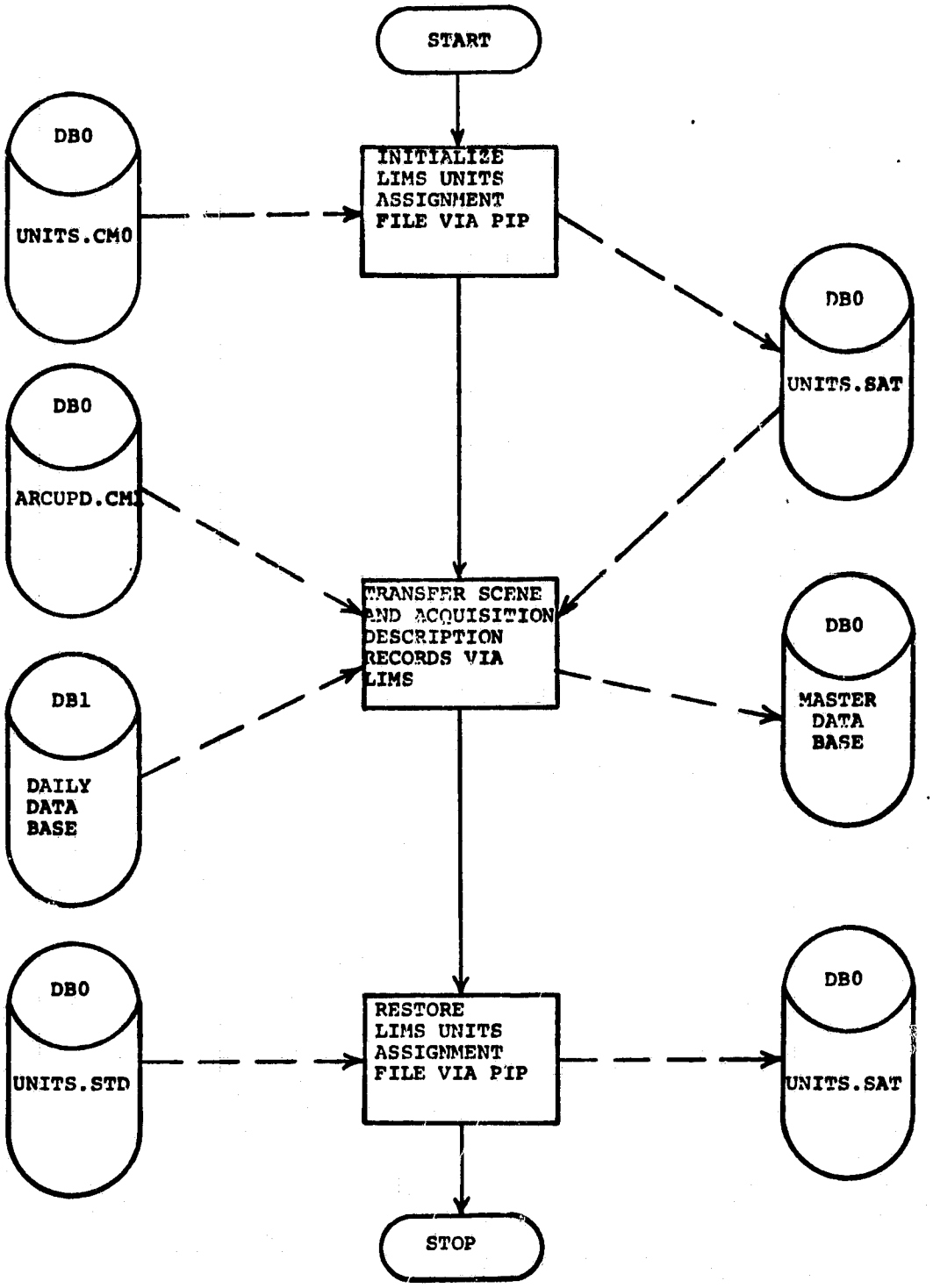

Figure 5.11-1
Flow of Archive Update Batch Run

5.12 DATA BASE RECOVERY

A recovery batch program has been provided for use when the computer crashes or hangs during the execution of any LIVES major processor (EXTRCT, CONDTN, SCRNTR, or CCTGEN). For other times, if no LIVES processor is executing, then nothing need to be done for recovery, and if a non-major LIVES processor is executing at the time of the crash, it may just be restarted from its beginning when the computer is functioning normally again. This section describes the recovery batch run.

5.12.1 LIVES RECOVERY BATCH RUN, LIVESRCVY.BIS

This batch job is started by the operator when it is determined that a major LIVES processor was in execution at the time of a computer malfunction.

o Input

1. A copy of the daily data base that was saved during the GHIT processor batch fun (on DB1 disk).
2. All of the transaction files that have been built by the major LIVES processor during this cycle (on DB1 disk).
3. A LIMS units assignment file (on system disk).
4. The current daily data base (on DB1 disk).

o Output

1. A new daily data base (rebuilt from a copy if any files of the old one were locked or missing) which includes updates to show all processing done up to the point of the crash, excluding the area of interest being handled at the time of the crash. It is on DB1 disk.
2. New version number files (type .VRS) for all LIVES major processor which show the version number of the last good transaction file for each processor. These are on DB1 disk.
3. Informative messages to the operator at his console (TTO).

o Description

This batch run recovers LIVES ro a current status by reapplying all existing transactions to the daily data base. It also unlocks or restores vital peripheral files and deletes extraneous transaction files.

o Flow

The flow of this batch run is depicted in figure 5.12-1.

o Routines Called

This batch run is kept in file LIVESRCVY.BIS on the system disk and references the following modules:

System utility, PIP	
First Recovery Program, RCVY1	(5.12.2)
Second Recovery Program, RCVY2	(5.12.3)
LIMS data base management system	(6.1)
Third Recovery Program, RCVY3	(5.12.5)

o Errors and Diagnostics

None.

ORIGINAL PAGE IS
OF POOR QUALITY

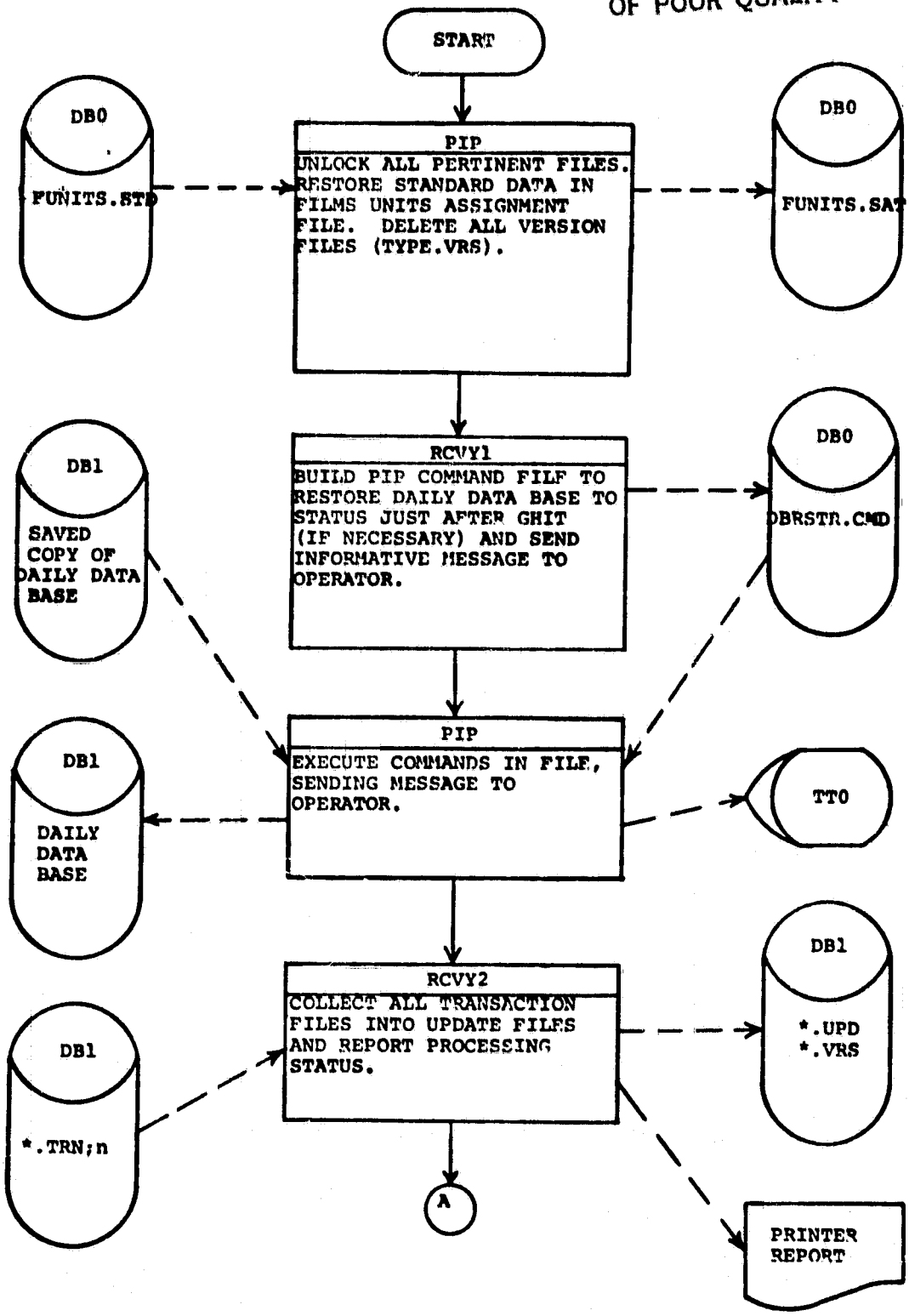

Figure 5.12-1
Flow of Recovery Batch Run

ORIGINAL PAGE IS
OF POOR QUALITY

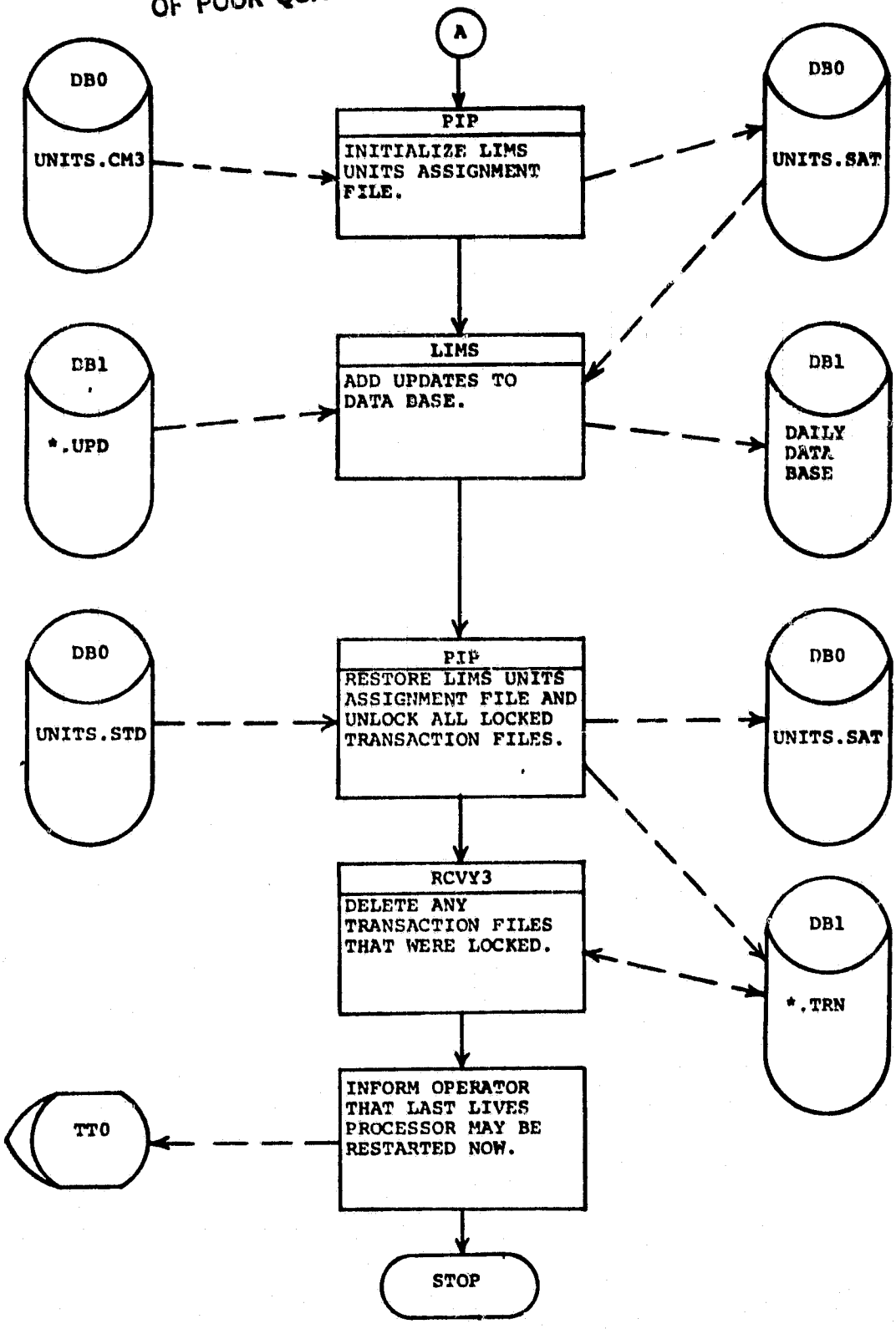

Figure 5.12-1 (Concluded)
Flow of Recovery Batch Run

5.12.2 FIRST RECOVERY PROGRAM, RCVY1

o Input

1. LIVES parameter file, LIVESP.DAT (on system disk).
2. Daily data base files (on DB1 disk).

o Output

PIP command file SY:DBRSTR.CMD.

o Description

This processor opens each of the four permanent files which comprise the daily data base to determine if any are locked (open error occurs). If none are locked, the PIP command file SY:DBRSTR.CMD has the one command "TTO:=NOSTR.DAT" stored in it, which, when executed by PIP, will tell the operator that the current LIVES daily data base is valid. If any are locked, the PIP commands to copy the four data base files from a saved copy of each are written into file SY:DBRSTR.CMD. Then the command "TTO:=RSTR.DAT" is written into the file, so that when PIP executes it, the operator will be notified that the LIVES daily data base has been restored from its backup copy and that any online updates to it have been last.

o Flow

The flow of this program is depicted in figure 5.12-2.

o Subroutines Called

No user subroutines are called.

o Errors and Diagnostics

None.

ORIGINAL PAGE IS
OF POOR QUALITY

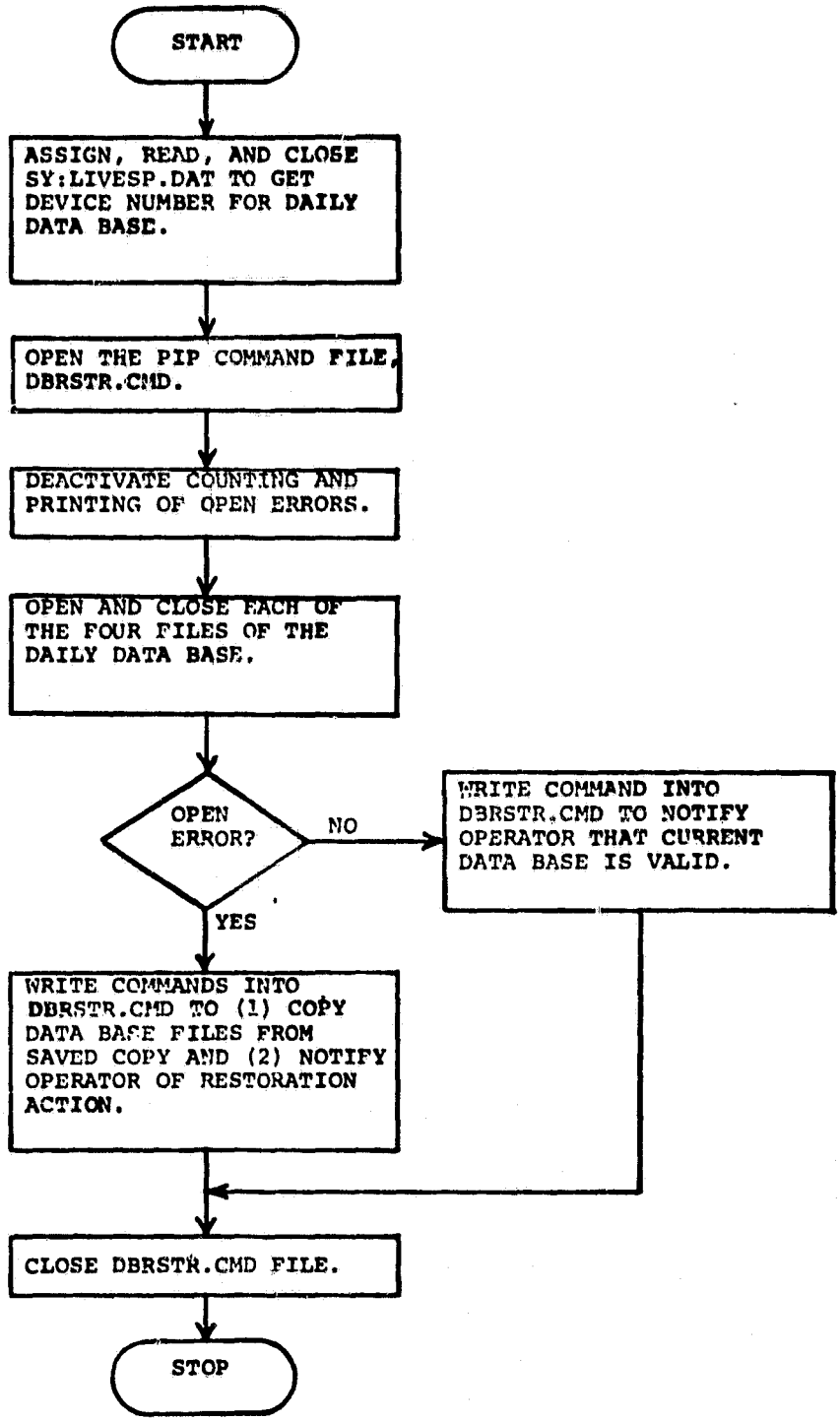

Figure 5.12-2
Flow of RCVY1 Program

5.12.3 SECOND RECOVERY PROGRAM, RCVY2

o Input

1. LIVES parameter file, LIVESP.DAT (on system disk).
2. Transaction files (type.TRN) from all LIVES major processors (on DB1 disk).

o Output

1. An update file (type .UPD) for each LIVES major processor (on DB1 disk).
2. A printer report on all transactions processed.

o Description

This processor calls COPYTF and RECRPT subroutines for each major LIVES processor to collect transaction files and print transactions on a report.

o Flow

The flow of this program is depicted in figure 5.12-3.

o Subroutines Called

Copy Transaction Files, COPYTF	(6.2.1)
Recovery Report, RECRPT	(5.12.4)

o Errors and Diagnostics

None.

ORIGINAL PAGE IS
OF POOR QUALITY

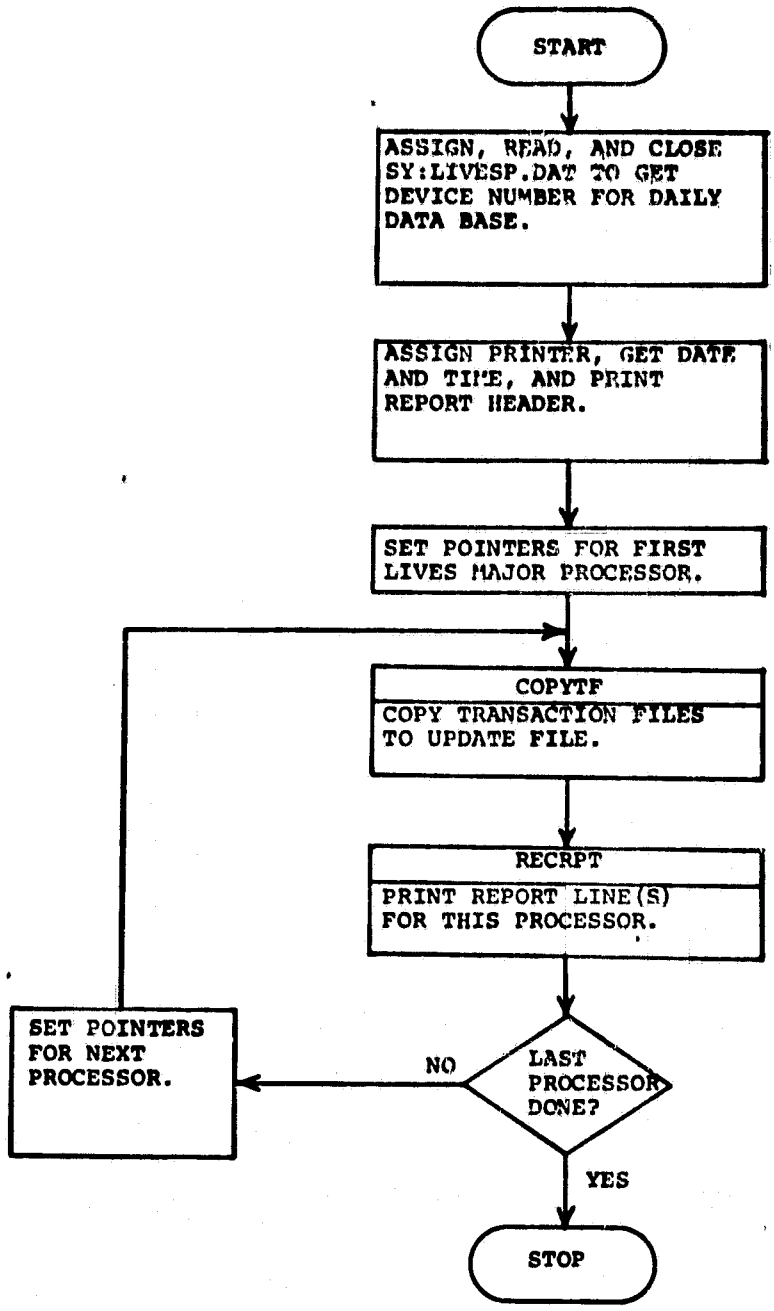

Figure 5.12-3
Flow of RCVY2 Program

5.12.4 RECOVERY REPORT SUBROUTINE, RECRPT

o Input

An update file (type .UPD).

o Output

A printer report.

o Description

This subroutine opens an update file and reflects on a printer report each transaction in the file.

o Flow

The flow of this subroutine is depicted in figure 5.12-4.

o Subroutines Called

No user subroutines are called.

o Errors and Diagnostics

None.

ORIGINAL PAGE IS
OF POOR QUALITY

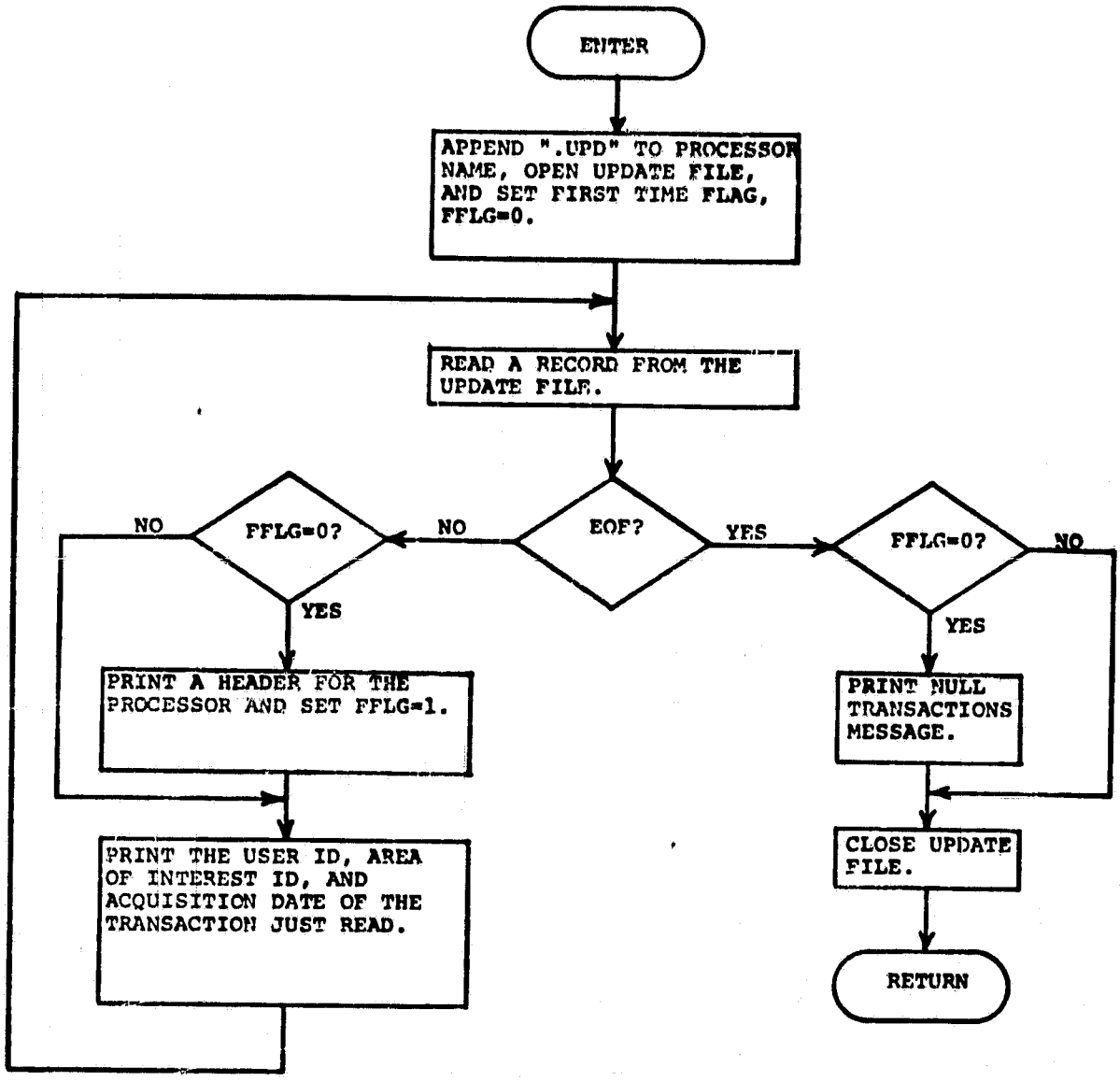

Figure 5.12-4
Flow of RECRPT Subroutine

5.12.5 THIRD RECOVERY PROGRAM, RCVY3

o Input

1. LIVES parameter file, LIVESP.DAT (on system disk).
2. Major processors' version number files (on DB1 disk).
3. Major processors' transaction files (on DB1 disk).

o Output

None.

o Description

This program deletes any transaction file that may have been locked due to being open when a computer malfunction occurred. That particular transaction will not have been applied (or re-applied during recovery) to the data base and consequently will need to be processed again.

o Flow

The flow of this program is depicted in figure 5.12-5.

o Subroutines Called

None.

o Errors and Diagnostics

None.

ORIGINAL PAGE IS
OF POOR QUALITY

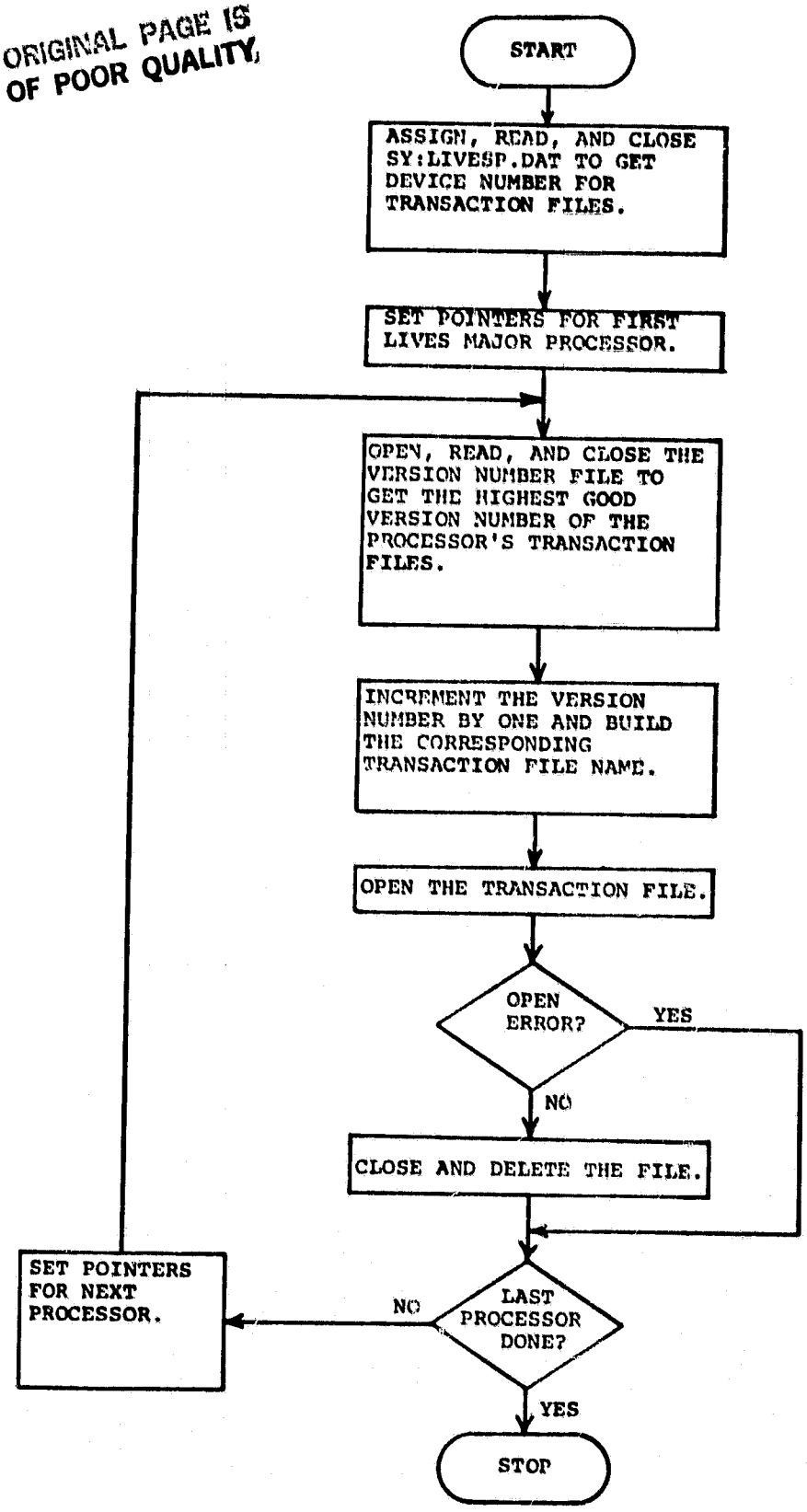

Figure 5.12-5
Flow of RCVY3 Program

5.13 REPORTS

LIVES report capability includes five specific report capabilities delivered with the system and a generalized report generation capability. The generalized report capability provides for generating new report programs as their requirements arise and generating ad-hoc reports.

The five reports to be delivered are generated from the Daily PC&S data base. The Master data base provides for generating weekly, monthly, other periodic, and aperiodic reports.

5.13.1 TAPE ORDER PROCESSING SUMMARY

This report identifies the HDT tapes to the processed and the order in which they are to be processed. It is produced by the GHIT batch run which is labeled "LIVES1".

o Inputs

PC&S data base.
LIMS command file.

o Output

High Density Tape Processing Tape Order Report (See figure 5.13-1).

o Processing Description

All Scene Description records are selected. They are sorted on HDT to generate an interim command file which generates record sets for use in another report. Then they are sorted on scene number (assumes contiguous scene numbers have been assigned to all scenes of interest on any one HDT), the report header is printed, and data from each Scene Description is printed. The start and End IRIG times are merely the minimum and maximum IRIG times for scenes of interest on each HDT, demonstrating the assumption that IRIG times on an HDT are monotonically increasing. The sensor field is head-coded to be "MSS".

ORIGINAL PAGE IS
OF POOR QUALITY

HIGH DENSITY TAPE
PROCESSING TAPE ORDER
(30-AUG-79)

HDT TAPE	START IRIG	END IRIG	SCENE	LANDSAT	SENSOR
13MHP7907658			20	3	MSS
	0010102026	0010132360	29	3	MSS

Figure 5.13-1
Processing Tape Order Report

5.13.2 PREPROCESSING ACTIVITY SUMMARY REPORT

Describes the scenes on the HDT's to be used for processing the areas of interest. It is produced by the GHIT batch run which is labeled "LIVES1".

o Inputs

PC&S data base.

LIMS command file for report.

o Output

Preprocessing Activity Summary Report (See Figure 5.13-2).

o Preprocessing Description

The report header is first printed and includes the GHIT number and date (information taken directly from the GHIT and not carried in the daily data base). Then a looping process is begun which uses the record sets created earlier (each set contains all the Scene Description records for scenes from only one HDT). For each record set, an HDT title line (sensor field is hard-coded to be "MSS"), column headings, and data from each record (bands field is hard-coded to be "1,2,3,4") is printed. The loop is terminated by encountering a null set which was created earlier by a "SKRCTYPE4" command. The values is the cloud percent field are in tens of percent. The first three characters of the WRS field are the path; the last three are the row (row is first and path second in the Area of Interest Description record fields PWRSRP and SWRSRP).

HIGH DENSITY TAPE
PREPROCESSING ACTIVITY SUMMARY
(30-AUG-79)

GHIT ID LOXGT7908213 DATE 79082

HDT: L3MHP7907658 DATE: 9076 LANDSAT: 3 SENSOR: MSS

SCENE	ACQ DATE	WRS	CLOUD %	REG QUAL	BANDS	LAT	LON	SUN EL	SUN AZ
20	9064	048032	01	7	1,2,3,4	N040-12	W122-14	35	139
29	9065	049032	01	7	1,2,3,4	N040-12	W123-40	35	139

ORIGINAL PAGE IS
OF POOR QUALITY

Figure 5.13-2
Preprocessing Activity Summary Report

5.13.3 EXPECTED A OF I SUMMARY REPORT

Describes for each User ID the areas of interest expected to be extracted. It is produced by the GHIT batch run which is labeled "LIVES1".

o Input

PC&S data base
LIMS command file for report

o Output

Expected A of I Summary Report (See Figure 5.13-3).

o Processing Description

LIMS will be used to perform the following functions:

o Select all acquisition records

o Sort acquisition records according to (1) User ID, and (z) Area of Interest ID

o Print report header and selected fields, grouped by User ID.

EXPECTED AREA OF INTEREST SUMMARY
(30-AUG-79)

USERID	AREA OF INTEREST	ACQ. DATE	PRM/ SEC.	SIZE LINES	SIZE PIXELS	LOCATION LATITUDE	LOCATION LONGITUDE	COUNTRY	REG.	ZONE	STRATA
10	9794	9064	1	117	196	N040/52	W122/39	US	01	0001	0001
	9794	9065	2	117	196	N040/52	W122/39	US	01	0001	0001
	9795	9064	2	117	196	N040/52	W121/49	US	01	0001	0001
	9796	9064	1	117	196	N040/12	W122/14	US	01	0001	0001
	9797	9064	1	117	196	N039/32	W122/39	US	01	0001	0001
	9797	9065	2	117	196	N039/32	W122/39	US	01	0001	0001
	9798	9064	2	117	196	N039/32	W121/49	US	01	0001	0001

Figure 5.13-3

Expected Area of Interest Summary Report

5.13.4 EXTRACTION PROCESSING SUMMARY REPORT

Describes for each User ID specific information about each Area of Interest extracted for output to CCT and/or available for screening and possible output to CCT depending upon successful translation. It is produced by the Daily Report batch run which is labeled "LIVES2".

o Inputs

PC&S data base

LIMS Command File

o Output

Extraction Processing Summary Report (See Figure 5.13-4).

o Processing

LIMS is used to perform the following functions:

Select all Acquisition Description Records and store them back into the data base with the QAGEOM field from the Scene Description record.

Print report header (sensor field is head-coded as "MSS").

Print report lines from each interim record.

HIGH DENSITY TAPE
EXTRACTION PROCESSING SUMMARY
(29-JUN-79)

LANDSAT 3 SENSOR MSS

USER	AOFI	ACQ. DATE	WRS	REG	ZONE	STRATA	SRQ	AC %	SA	CCT NUMBER	REG CODE
5	50	9063	12083	01	0001	0001	7	30	0	91801	
5	100	9063	14083	01	0001	0001	7	99	0		
5	246	9063	21083	01	0001	0001	7	52	1	91801	1

ORIGINAL PAGE IS
OF POOR QUALITY

Figure 5.13-4
Extraction Processing Summary Report

5.13.5 SCREENING AND REGISTRATION PROCESSING SUMMARY REPORT

Describes by User ID all Area's of Interest Screened and registered with the results. It is produced by the Daily Reports batch run which is labeled "LIVES2".

o Inputs

PC&S data base

LIMS Command File

o Outputs

Screening and Registration Processing Summary Report (See Figure 5.13-5).

o Processing Description

LIMS will be used to perform the following functions:

Print the report header (sensor field is head-coded as "MSS").

Print the reports lines from records contained in the same set that was used for the Extraction Processing Summary report (section 5.13.4) except that only records with field SRGDAT non-blank are printed.

ORIGINAL PAGE IS
OF POOR QUALITY

HIGH DENSITY TAPE
SCREENING AND REGISTRATION PROCESSING SUMMARY
(29-JUN-79)

LANDSAT 3 SENSOR MSS

USER	AOFI	ACQ. DATE	WRS	REG	ZONE	STRATA	SRQ	AC %	SA	CCT NUMBER	REG CODE
5	246	9063	21083	01	0001	0001	7	52	1	91801	1

Figure 5.13-5

Screening and Registration Processing Summary Report

o Input

SCENNO	Scene number	BNDSEX	Bands to extract
CPIXEL	Corner pixel	PREJRS	Preprocessing reject reason
CLINE	Corner line	NDPXAD	Total number pixels to add to line
AIPXLS	No of pixels this A of I	NOLNAD	Total number of lines to add.
AILNES	No of lines this A of I	FLPXLS	No. of pixels in a full scene
		FLNES	No. of lines in a full scene
		IERROR	status

o Output

Lines of pixels written on imagery file (.SAI file)

5.14 DIRECT EXTRACTION PROCESSOR, EXTWOT

If no GHIT (inventory tape) is available for a set of high density tapes, it will be necessary to obtain the GHIT information directly from the tapes. This processor combines the functions of the GHIT and EXTRACT processors, but it does not require the use of a GHIT.

This processor reads imagery header records from the full scene disks and compares WRS designators against those in the area of interest files. When a match is found, it creates imagery files from the appropriate lines of pixels and non-imagery files from the full scene data base header and annotation records.

o Input

The processor accepts Landsat scenes on the full scene data base (on 300 megabyte disks); the imagery data were placed there by the HDTRS as extracted from high density tapes.

o Output

The processor produces imagery files in the Search Area Data Base.

o Description

For each Landsat scene the WRS designator is matched against the areas-of-interest records. If an area of interest is to be extracted, acquisition-description and scene records are created.

o Common blocks

Communication within the program and subroutines of this processor is made by means of common blocks. A complete list of blocks and their variables is presented in Table 5.14-1.

o Subroutines called ASNLUN, CCPIXL, CLOS$, FVOPEN, GETLNP, OPEN$, PINIT, RDACQD, RDAOI, RDSCN, RDTOC, GRDPRM, UPDADR, UPDPCS, WRTIHD.

5.14.1 DRIVER PROGRAM EXTWOT

This program calls all subroutines used in this processor.

5.14.2 READ SYSTEM PARAMETERS, GRDPRM

This subroutine reads the system parameter file and sets up file names and saves the system default values, the disk addresses and the method of selecting the full scene disk.

o Inputs

System parameter file

o Outputs

DBNAME - Lines Master Data Base Name
DDBNAM - Daily PC&S Data Base Name
TSK - Task name

o Description

The system parameter file is opened and read. The unit numbers for the data bases are inserted in the data base names. The file is closed. The task name is saved.

o Subroutines called

CLOS$, OPEN$

5.14.3 READ NON-IMAGERY DATA, RDSCN

Read the non-imagery data which describes an HDT scene.

o Inputs

LBNOH Logical block number for header 300MG Disk containing scene data.

ORIGINAL PAGE IS
OF POOR QUALITY

TABLE 5.14-1 - COMMON BLOCKS OF EXTWOT

	Common block/ADAI	Set by:	Used by:
USERID	User ID	RDAIS	SAVACQ,RDAIS
SCENNO	Scene number	Main	SAVACQ
AOIID	Area of interest ID	RDAIS	SAVACO,RDAIS
SATYPE	Not used	-	-
PREJRS	Preprocessing reject reason	MAIN	SAVACQ
SCRREG	Screen registration	MAIN	SAVACQ
SACLDA	Scene cloud assessment		SAVACQ
PRMSCN	Primary-secondary WRS	RDAIS	SAVACQ
	Common block/SCENE		
SCNNUM	Relative scene position on disk	MAIN	
ACQDAT	Acquisition Date	RDSCN	SAVESC
HDTID	HDT ID	Not used	-
IMGID	Image ID	RDSCN	SAVESC
WRSDES	WRS designator	RDSCN	SAVESC
FMTLAT	Latitude	RDSCN	SAVESC
FMTLON	Longitude	RDSCN	SAVESC
SUNELA	Sun elevation	RDSCN	SAVESC
SUNAZA	Sun azamith	RDSCN	SAVESC
DATGHI	Date GHIT run	Not used	-
HDTPDT	HDT processing date	Not used	SAVESC
IRIGB	IRIG beginning date	Not used	SAVESC
IRIGE	IRIG ending date	Not used	SAVESC
SCNCLA	Scene cloud assessment		SAVESC
WRSOFF	WRS offset	RDSCN	SAVESC
FLLNES	Fill lines	GETLNP	SAVACQ
FLPXLS	Fill pixels	GETLNP	SAVACQ
LOWWT	Not used	-	-
NOBNDS	Number of bands	RDSCN	SAVESC
REGPFL	Regenerated product flag		SAVESC
MISSNO	Mission number	RDSCN	SAVESC
RESTYP			SAVESC
QAGEOM	Quality assessment	RDSCN	SAVESC
PLYBDR	Playback-direct	RDSCN	SAVESC
ASCDES	Ascending-descending	RDSCN	SAVESC
	Common Block/AI		
USERID1	User ID		
AOIID1	Area of interest ID		
AILNES	A of I lines	RDAIS	CCPIXL,GETLNP
AIPXLS	A of I pixels	RDAIS	CCPIXL,GETLNP
AILAT	A of I latitude	RDAIS	CCPIXL
AILONG	A of I longitude	RDAIS	CCPIXL
REGOTS	Registration quality sceen	RDAIS	MAIN
REGOTR	Registration quality reject	RDAIS	MAIN
BNDSEX	Bands extracted	GETLNP	
BNREQE	Bands required	RDAIS	GETLNP
	Common Block/SYSPRM		
FFRMPX	Full frame pixels	GRDPRM	CCPIXL
FFRMLN	Full frame lines	GRDPRM	CCPIXL
NOPXAD	Number pixels to add	GRDPRM	GETLNP
NOLNAD	Number of lines to add	GRDPRM	GETLNP
DNOPXL	Default number pixels	GRDPRM	RDAIS
DNOLNE	Default number line	GRDPRM	RDAIS
SREGQS	Scene Registration-sceen	GRDPRM	RDAIS
SRGQS	Scene Registration-reject	GRDPRM	RDAIS
MDBDDN	Master data base disk number	GRDPRM	SELAIS
DSADDN	Daily data base disk number	GRDPRM	-
DISKAD	Disk address	GRDPRM	GETLNP
	Common Block/files		
DBNAME	Master data base name	GRDPRM	SELAIS
DDBNAM	Daily data base name	GRDPRM	Not used
TFILE	Transaction file name	GRDPRM	Not used
TSK	Task name	GRDPRM	SELAIS
NDSAF	Disk number	GDRPRM	RDAIS
MDTHOD	Image disk method	GRDPRM	RDTOC
	Common Block/KURDSK		
DISKNO	Disk Number		
DKUNIT	Disk unit number	RDTOC	GETLNP
DKSTUN	Disk status unit disk	MAIN	CKSTDK
DSKATD	Number of disk attached	RDTOC	RDTOC
DSKSTS	Disk status array	CKSTDK	RDTOC
IWRSDK	WRS Designators for current disk	RDTOC	MAIN
ISTAT	Status word	RDDSK	RDTOC
KSTAT	Status word	-	-
NOSCEN	Scene position on disk	MAIN	GETLNP
PAR	Array for QIO		CKSTDK,RDTOC
WRSTBL	Not used	-	-
INDXWT	Not used	-	-
MXWRST	Not used	-	-

ORIGINAL PAGE IS
OF POOR QUALITY

TABLE 5.14-1 COMMON BLOCKS OF EXTHOT (Concluded)

		Used by:	Used by:
	Common block/ADAI		
USERID	User ID	RDAIS	SAVACQ,RDAIS
SCENNO	Scene number	Main	SAVACQ
AOIID	Area of interest ID	RDAIS	SAVACO,RDAIS
SATYPE	Not used	-	-
PREJRS	Preprogessing reject reason	MAIN	SAVACQ
SCRREG	Screen registration	MAIN	SAVACQ
SACLDA	Scene cloud assessment		SAVACQ
PRMSCN	Primary-secondary WRS	RDAIS	SAVACQ
	Common block/SCENE		
SCNNUM	Relative scene position on disk	MAIN	
ACQDAT	Acquisition Date	RDSCN	SAVESC
HDTID	HDT ID	Not used	-
INGID	Image ID	RDSCN	SAVESC
WRSDES	WRS designator	RDSCN	SAVESC
FMTLAT	Latitude	RDSCN	SAVESC
FMTLON	Longitude	RDSCN	SAVESC
SUNELA	Sun elevation	RDSCN	SAVESC
SUNAZA	Sun Azamith	RDSCN	SAVESC
DATGHI	Date GHIT run	Not used	-
HDTPDT	HDT processing date	Not used	SAVESC
IRIGB	IRIG Beginning date	Not used	SAVESC
IRIGE	IRIG Ending date	Not used	SAVESC
SCNCLA	Scene cloud assessment		SAVESC
WRSOFF	WRS offset	RDSCN	SAVESC
FLLNES	Fill lines	GETLNP	SAVACQ
FLPXLS	Fill pixels	GETLNP	SAVACQ
LOWWT	Not used	-	-
NOBNDS	Number of bands	RDSCN	SAVESC
REGPFL	Regenerated product flag		SAVESC
MISSNO	Mission number	RDSCN	SAVESC
RESTYP			SAVESC
QAGEON	Quality assessment	RDSCN	SAVESC
PLYBDR	Playback-direct	RDSCN	SAVESC
ASCDES	Ascending-descending	RDSCN	SAVESC
	Common Block/AI		
USRID1	User ID		
AOIID1	Area of interest ID		
AILNES	A of I lines	RDAIS	CCPIXL,GETLNP
AIPXLS	A of I pixels	RDAIS	CCPIXL,GETLNP
AILAT	A of I latitude	RDAIS	CCPIXL
AILONG	A of I longitude	RDAIS	CCPIXL
REGOTS	Registration quality sceen	RDAIS	MAIN
REGOTR	Registration quality-reject	RDAIS	MAIN
BNDSEX	Bands extracted	GETLNP	
BNREQE	Bands required	RDIS	GETLNP
	Common Block/SYSPRM		
FFRMPX	Full frame pixels	GRDPRM	CCPIXL
FFRMLN	Full frame lines	GRDPRM	CCPIXL
NOPXAD	Number pixels to add	GRDPRM	GETLNP
NOLNAD	Number of lines to add	GRDPRM	GETLNP
DNOPXL	Default number pixels	GRDPRM	RDAIO
DNOLNE	Default number line	GRDPRM	RDAOI
SREGQS	Scene Registration-sceen	GRDPRM	RDAOI
SRGQS	Scene Registration-reject	GRDPRM	RDAOI
MDBDDN	Master data base disk number	GRDPRM	SELAIS
DBADDN	Daily data base kisk number	GRDPRM	-
DISKAD	Disk address	GRDPRM	GETLNP
	Common Block/files		
DBNAME	Master data base name	GRDPRM	SELAIS
DDBNAM	Daily data base name	GRDPRM	Not used
TFILE	Transaction file name	GRDPRM	Not used
TSK	Task name	GRDPRM	SELAIS
NDSAF	Disk number	GDRPRM	RDAIS
MDTHOD	Image disk method	GRDPRM	RDTOC
	Common Block/KURDSK		
DISKNO	Disk Number		
DKUNIT	Disk unit number	RDTOC	GETLNP
DKSTUN	Disk status unit disk	MAIN	CKSTDK
DSKATD	Number of disk attached	RDTOC	RDTOC
DSKSTS	Disk status array	CKSTDK	RDTOC
IWRSDK	WRS Designators for current disk	RDTOC	MAIN
ISTAT	Status word	RDDSK	RDTOC
KSTAT	Status word	-	-
NOSCEN	Scene position on disk	MAIN	GETLNP
PAR	Array for QIO		CKSTDK,RDTOC
WRSTBL	Not used	-	-
INDXWT	Not used	-	-
MXWRST	Not used	-	-

o Outputs

Common block/SCENE/describing the scene.

HEADER-array containing header and sun angle data.

o Description

This subroutine reads the header, annotation and trailer records for scene. The following items are extracted from the header record: IMGID, ASCDES, WRSDES, SENSID, MISSNO and ACQDAT. The FMTLAT, FMTLON, PLYBDR and SUN information are extracted from the annotation record.

o Subroutines called

RDDSK

Flowchart

None.

5.14.4 SELECT AREAS OF INTEREST, SELAIS

SELAIS selects the areas of interest with the same WRS designator as the current scene.

o Inputs

WRSDES WRS designator
ACQDAT acquisition date

o Outputs

Area of Interest Records PC&S data base updated

o Description

This subroutine creates a file of the area-of-interest records in the LMDB with the same WRS indicator as the current record. This file is used to update the PC&S data base and as input to the the subroutine RDAOI.

o Subroutines called

CLOS$, EXCDMS, OPEN$, WAIT

5.14.5 READ AREA-OF-INTEREST RECORD, RDAIS

This subroutine reads the area of interest records, save the data, and writes the non-imagery data file.

o Inputs

Matching area of interest records

o Outputs

Non-imagery record.

o Description

This subroutine reads one record from the area of interest file. If there are no more areas of interest, AOIID is set to blanks and the subroutine returns. The count is updated for the matching primary or secondary WRS indicators is updated and the non-imagery data file is written.

o Subroutines called

CLOS$, OPEN$

5.14.6 WRITE ACQUISITION DESCRIPTION RECORD, SAVACR.

o Input

/IADAI/common block

o Output

Acquisition description record.

o Description

An acquisition-description record is written.

o Subroutines called

None.

5.14.7 COMPUTE CORNER PIXEL, CCPIXL

Purpose

See EXTRACT processor (5, 7, 10)

5.14.8 WRITE IMAGERY FILE HEADER, WRTIHD

Purpose

See EXTRACT processor (5, 7, 12)

5.14.9 GET LINES OF PIXEL, GETLNP

Purpose

See EXTRACT processor (5, 7, 13)

5.14.10 UPDATE PC&S DATA BASE, UPDPCS

Purpose

See section 5.7.16 of the extract processor.

5.14.11 SAVE SCENE DESCRIPTION, SAVESC

This routine saves the data to update the daily PC&S data base by writing the scene description to temporary file.

o Outputs

/IADAI/common block
/AI/ common block
/SCENE;common block

o Outputs

Scene record

o Description

A scene record is written on file 8.

5.14.12 MOVE LINES OF PIXELS, MOVLNP

This routine moves pixels form full scene data base to search are data base.

5.15 ONLINE LIVES QUERY PROGRAM, OLIVES

To be able to examine (in a Read-Only mode) the LIVES daily data base during a regular LIVES processing cycle for the purpose of determining which or how many areas of interests have been through a particular processor (or any other items of interest in the data base), a program called OLIVES has been provided. Whereas a user could use LIMS directly and access the data base, the fact that all transactions from any major LIVES processor are not applied to the data base until the termination of that processor means the user would miss those transactions from a concurrent processor and would not be viewing the actual current status of the system. To avoid this situation, a user should log on to UIC [333,333] and RUN OLIVES$. The OLIVES program collects all existing transactions from their files, applies them to the daily data base, and places the user in LIMS ready for the BEDB1:PCS command. The processing done by OLIVES is described in the flowchart in figure 5.15-1.

ORIGINAL PAGE IS
OF POOR QUALITY

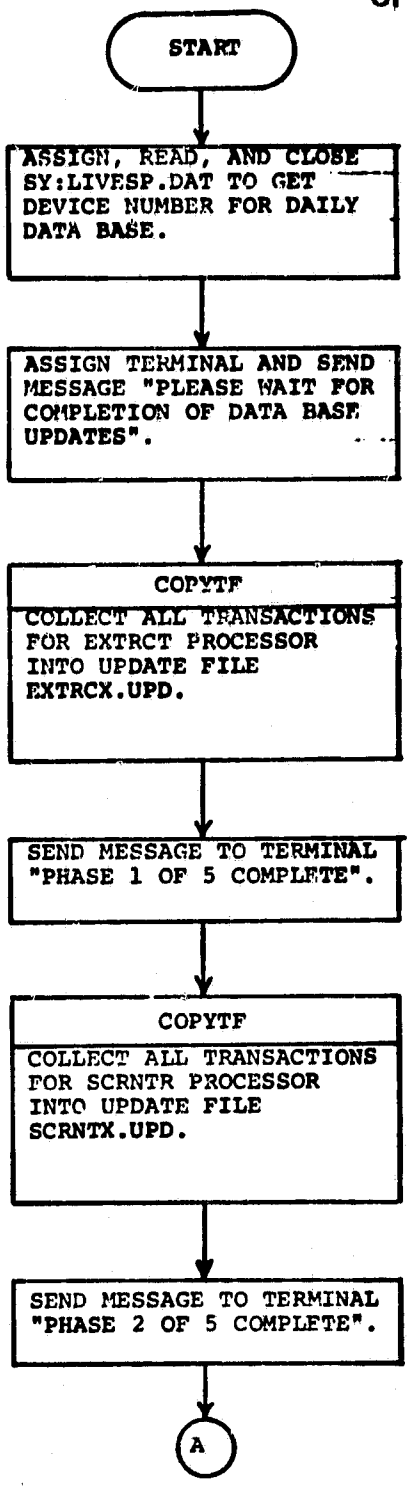

Figure 5.15-1
Flow of OLIVES Program

ORIGINAL PAGE IS
OF POOR QUALITY

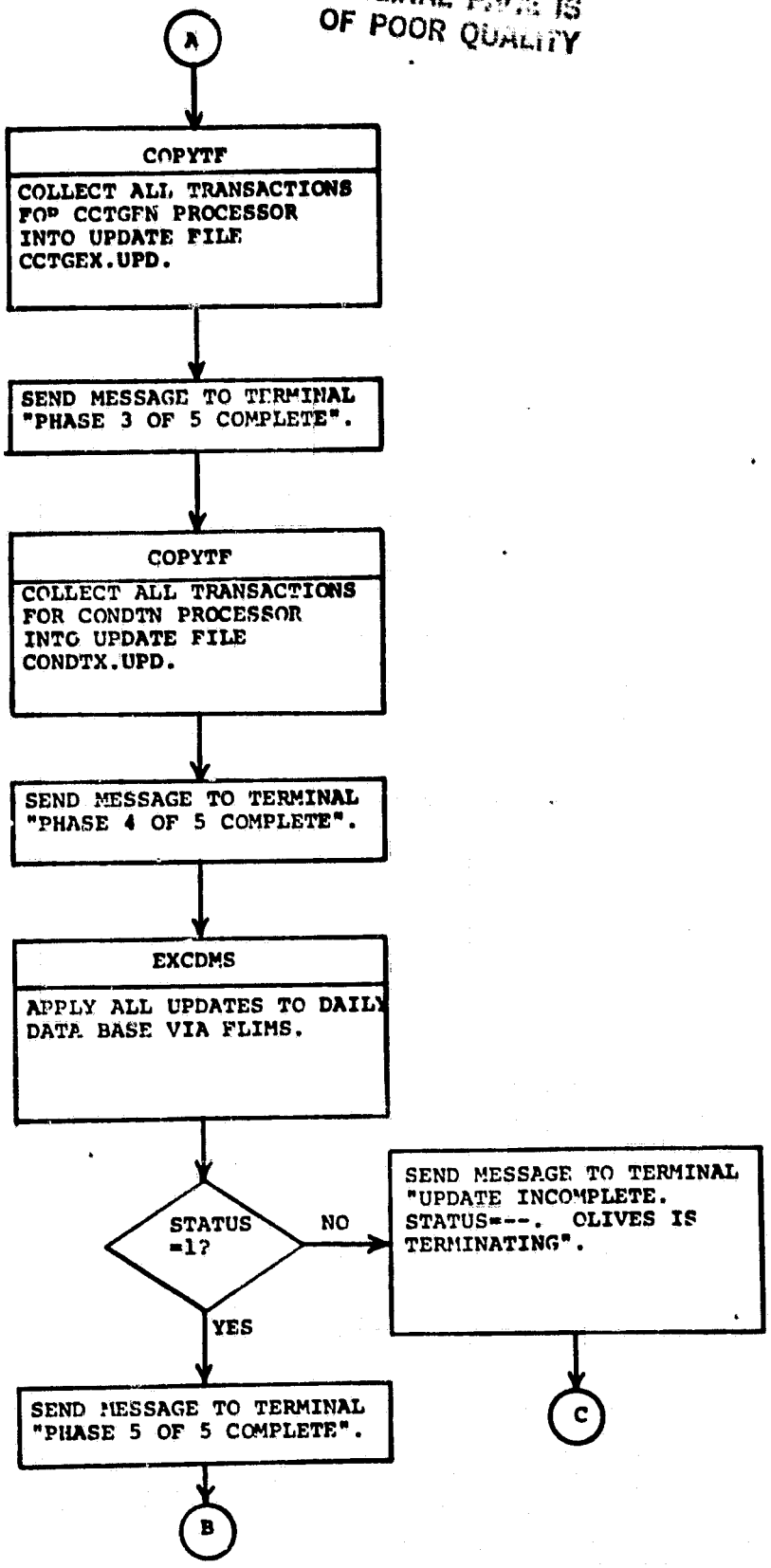

Figure 5.15-1 (Continued)
Flow of OLIVES Program

ORIGINAL PAGE IS
OF POOR QUALITY

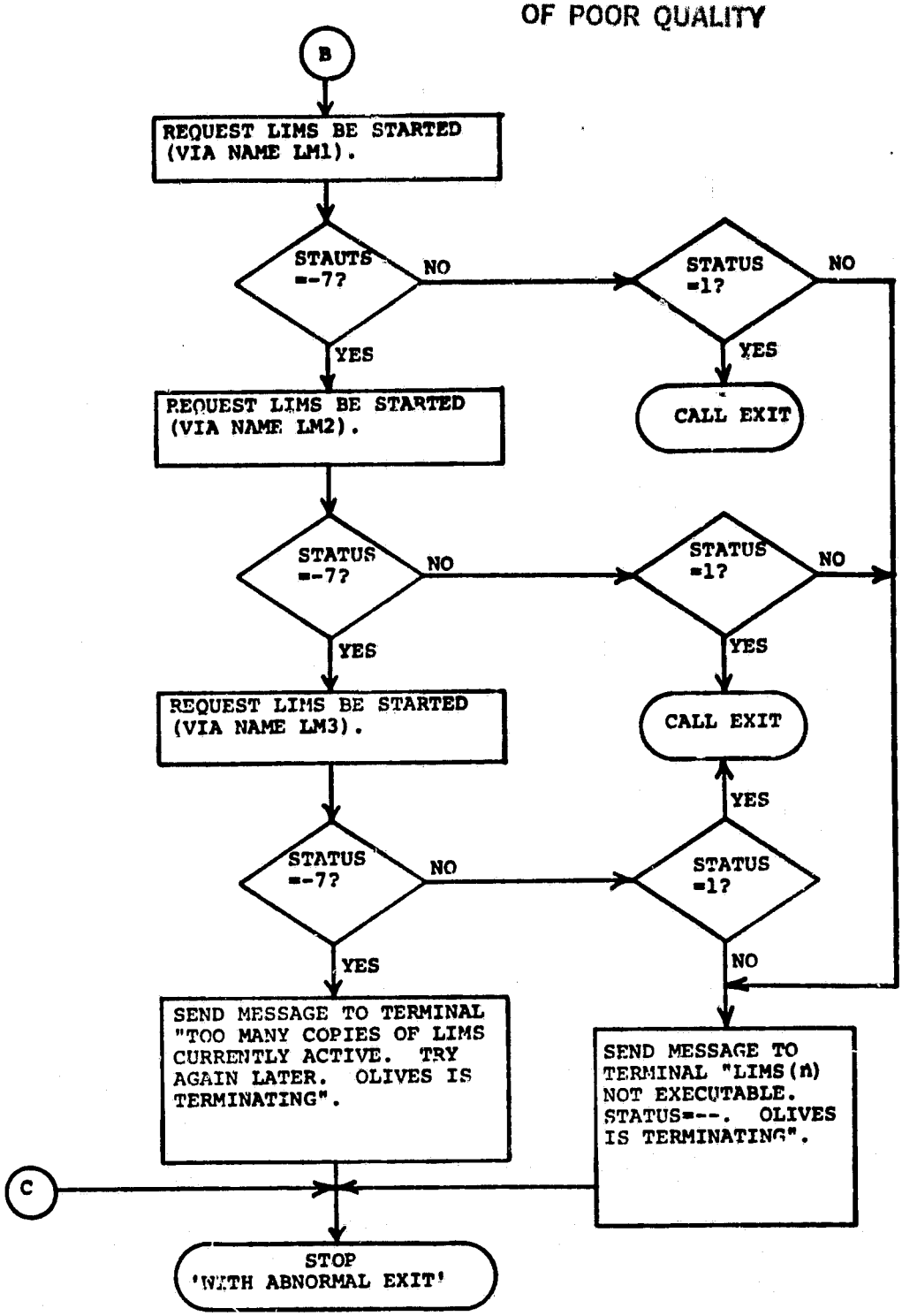

Figure 5.15-1 (Concluded)
Flow of OLIVES Program

5.16 SAVE AND RESTORE MASTER (ARCHIVE) DATA BASE

After all operations of a daily cycle of the LIVES have been completed, the operator saves the Master Data Base to a tape. This tape is kept one week as a backup to the disk files. The following steps are executed by the operator:

1. Log on to [5,5].
2. Ready a scratch tape with a write ring on drive MTx, where x is 0 or 1.
3. Enter INI MTx:mmddhh/UIC=[333,33] where

   $01 \leq mm \leq 12$ is the current month number,

   $01 \leq dd \leq 31$ is the current day number, and

   $00 \leq hh \leq 23$ is the current hour number.
4. Enter MOU MTx:/OVR.
5. Enter PIP MTx:[333,33]=DBØ:[333,33]LMDB.*/FO
6. Enter PIP MTx:[333,33]/LI and verify that the following files are shown to be on the tape:

   LMDB.R1
   LMDB.R2
   LMDB.R3
   LMDB.R4
   LMDB.LCK
7. Enter DMO MTx: and attach a phusical label to the tape identifying it as a LIVES Archive Backup, with the date and time of creation and the drive on which it was mounted ('H' or 'I').

Whereas the save operation is done at the end of every cycle, the restore operation is only done when the current system disk copy of the Master Data Base is determined to be unusable. At this point, the save tape from the previous cycle is readied without a write ring on MTx and the operator executes the following steps:

1. Log on to [5,5].
2. Enter MOU MTx:/OVR

3. Check that the label printed at the console is the desired date and hour.

4. Enter PIP [333,33]LMDB.*:*/DE

5. Enter PIP DBØ:[333,33]=MTx:[333,33]/FO

6. Enter PIP [333,33]LMDB.*/LI and verify that the following files are shown to be on DBØ:

```
LMDB.R1
LMDB.R2
LMDB.R3
LMDB.R4
LMDB.LCK
```

7. Enter DMO MTx: and return tape to its storage location.

6. SHARED OR COMMON SOFTWARE

6.1 DATA MANAGEMENT SYSTEM HOST LANGUAGE INTERFACE MODIFICATIONS

The multiple capabilities of a preexisting data management system, LIMS, are to be incorporated into LIVES. One version will be used as a subroutine, callable from a variety of programs. The other version will be identical except that it will be usable from an interactive terminal, much as the current version of RIMS.

The interface subroutine, EXCDMS (6.1.1), will adapt the data management system use as a subroutine. The main program, FSEL (6.1.2.) is a driver program for the FORTRAN version, comparable to the current interactive driver program, SEL (6.1.3). FUNITS (6.1.4), comparable to the current UNITS (6.1.5). The remaining subroutines will be used in both versions:

ACCNO	(6.1.6)
ATTACH	(6.1.7)
AUFILE	(6.1.8)
BEGIN	(6.1.9)
CAUFIL	(6.1.10)
CFCR	(6.1.11)
CIMAIN	(6.1.12)
CIRP	(6.1.13)
CMPUTE	(6.1.14)
DISFMT	(6.1.15)
DISPDD	(6.1.16)
DISPLA	(6.1.17)
DTEINT	(6.1.18)
END	(6.1.19)
FTFMT	(6.1.20)
GETCLD	(6.1.21)
GETPAR	(6.1.22)

HEADER	(6.1.23)
INPARM	(6.1.24)
JFDFCR	(6.1.25)
JNSNCR	(6.1.26)
PRNTID	(6.1.27)
SORTS	(6.1.28)
SPCSET	(6.1.29)
SQZE	(6.1.30)
STATUS	(6.1.31)
TFORM	(6.1.32)
TFORMW	(6.1.33)
UNLOCK	(6.1.34)

Full details on RIMS are available in references 2.5-1 through 2.5-4. Additional information on LIMS is found in reference 2.5-7.

6.1.1 DMS HOST LANGUAGE INTERFACE, EXCDMS

To allow a processor to communicate with the DMS-structured data base without having to include all of the DMS software, a scheme is planned whereby the processor builds files of DMS commands and data, executes the DMS as a separate task via the subroutine EXCDMS, and then reads any needed information from output files built by the DMS. A description of EXCDMS follows.

- <u>Input</u>

The calling sequence is as follows:

CALL EXCDMS (TSK, DBNAME, CFILE, DFILE, MFILE, RFILE, UNIT1, UNIT2, STATUS), in which

TSK - 8-character array containing the left-justified, blank-filled ASCII name of the calling processor.

DBNAME - 20-character array containing the left-justified, blank-filled name of the data base desired, including the device and UFD specification if needed.

CFILE - 40-character array containing the left-justified, blank-filled ASCII command file name.

DFILE - 40-character array containing the left-justified, blank-filled ASCII message file name.

MFILE - 40-character array containing the left-justified, blank-filled ASCII message file name.

RFILE - 40-character array containing the left-justified, blank-filled ASCII report file name.

UNIT1 - integer*2 word containing the unit number to be used for the data base lock file assignment.

UNIT2 - integer*2 word containing the unit number to be used for assigning the DMS unit-assignment file.

o Output

STATUS - integer*2 word containing the status of the request to execute the DMS. It will contain one of the following values:

+1 Successful completion
-1 Insufficient pool nodes available to requestor
-2 Task not installed
-3 Partition too small for task
-6 Handler task not resident to load task
-7 Task is active
-8 Task is disabled
-20 No blanks within first twenty characters of input data base file name
-80 Directive issued by background task
-91 Invalid UIC
-94 Partition not in system (no TPD entry found)
-95 Invalid priority specified (<0 or >250)
-98 Part of DPB is out of issuing task's address space
-99 DIC or DPB size is invalid

o Description

The routine will attempt to exclusively assign the data base lock file to ensure that no other program is updating the data base. If it is unsuccessful, it will wait two seconds and try again. When it is successful, it will assign the file FUNITS.SAT and write into that file the parameters that the DMS will need to do its job. These parameters are the calling task's name and the names of the command, data, message, and report files. It will then free FUNITS.SAT and request that the DMS begin execution. The status from the request will be received back and stored in output variable STATUS. If STATUS=1, meaning the DMS started successfully, then the calling

task will be suspended. Just before returning, this routine frees the data base lock file.

6.1.2 MAIN PROGRAM, FSEL

The main program, SEL, of the DMS is modified to create a similar main program, FSEL, to allow the host language DMS to call the subroutine FUNITS instead of UNITS.

- Input Modification

None.

- Output Modification

None.

- Description of Modification

The program statement CALL UNITS is changed to CALL FUNITS. The common block RSMFLG is included in the subprogram to ensure its remaining in core. The "ENTER COMMAND" prompt is removed since FLIMS is not used interactively.

6.1.3 MAIN PROGRAM, SEL

- <u>Input Modification</u>

  None

- <u>Output Modification</u>

  None

- <u>Description of Modification</u>

  The common block RSMFLG is included in the subprogram to ensure its remaining in core with its values available to subroutine END.

6.1.4 FLIMS UNITS ASSIGNMENT, FUNITS

The subroutine UNITS is modified to create a similar subroutine, called FUNITS, to enable the host language DMS to assign a different units assignment file than the terminal DMS.

o Input Modification

An additional record is read from file FUNITS.SAT.

o Output Modification

The variable RTSK in common block RSMFLG has the name of the task which caused execution of the DMS. The variable RFLG in RSMFLG is set to indicate that this is a host DMS execution. The file FUNITS.SAT is restored to standard contents.

o Description of Modification

The units assignment file ID is changed from SY:[210,4] UNITS.SAT to SY:FUNITS.SAT. The first record read from FUNITS.SAT is checked for all blanks. If it is all blank, RFLG is set to two.

If it is non-blank, then RFLG is set to one, and the task name is stored in variable RTSK. After the last record from FUNITS.SAT has been read and processed, the file is rewound, and a set of standard records is written back into the file before it is closed.

6.1.5 LIMS UNIT ASSIGNMENTS, UNITS

This subroutine is modified to assign and read unit assignments from a standard file whose location is different from previous systems, thereby enabling access throughout LIVES.

o Input Modification

None.

o Output Modification

Variable RFLG in common block RSMFLG is set to zero.

o Description of Modification

The units assignment file ID is changed from SY:[210,4] UNITS.SAT to SY:UNITS.SAT. The new variable, RFLG, in common block RSMFLG is set to zero.

6.1.6 GENERATE ACCESS NUMBER, ACCNO

This subroutine is modified to incorporate a new record ID algorithm which uses User ID, Area of Interest ID, and Acquisition Date as basic components to identify a record.

o Input Modification

The input string is expected to contain either a single positive integer less than 2,147,483,647 or a three part number of the form User ID @ Area of Interest ID @ Acquisition Date, with $1 \leq$ User ID $\leq$ 20, $1 \leq$ Area of Interest ID $\leq$ 9999, and $1 \leq$ Acquisition Date $\leq$ 9365.

o Output Modification

None.

o Description of Modification

If the input string does not contain just a single integer, then locate the two @'s and convert the three character strings to integers. The record ID is then equal to 100,000,000 times the User ID plus 10,000 times the Area of Interest ID plus the Acquisition Date. If the Acquisition Date is missing, it is assumed to be zero, and if the Area of Interest ID @ Acquisition Date parts are missing, then both Area of Interest ID and Acquisition Date are assumed to be zero.

6.1.7 ATTACH FILES, ATTACH

This subroutine is modified to attach permanent data base files and temporary scratch files so that different users may access the same data base simultaneously.

o **Input Modification**

None.

o **Output Modification**

None.

o **Description of Modification**

Instead of the CALL ASSIGN statement, the OPEN statement is used. If the unit number is four or less, an existing data base file is opened with shared access. If the unit number is greater than four, a new, temporary, scratch file is opened for use only by this task.

6.1.8 ADD AND UPDATE FROM FILE, AUFILE

This subroutine is modified to allow for record ID input via three floating fields rather than two fixed fields and to allow up to three 80-character card images to be input per each logical record.

- Input Modification

If a record ID field is not identified via the input format (type '5'), expect at least the Area of Interest ID field to be identified in the input format and, optionally, the User ID field and the Acquisition Date field. Also, an integer variable, C, is added as the third input argument for the subroutine, to specify the number of card images that are being used per logical record.

- Output Modification

None.

- Description of Modification

The value of C is checked to determine the number of physical records per logical record. If C is zero, it is assumed that there is one 240-character physical record per logical record. If C is '1', '2' or '3', it is assumed that there are C 80-character physical records per logical record. Any other value of C results in an error message to the message file.

When the input specifies that there is no record ID field in the input record, the input format is searched for the field names RIDP1, RIDP2, and RIDP3. As each one is found, it is converted to an integer (set to zero if not found) and used in calculating the record ID.

6.1.9 INITIALIZE DMS, BEGIN

Purpose of Modification

This subroutine is modified to initialize the DMS in such a way as to prevent data base conflicts during updates.

o Input Modification

A new variable, RFLG, is included in the common block RSMFLG. The common block SECCOM is included in the subroutine. The BEGIN command has an optional :L suffix for use from the terminal.

o Output Modification

The common block SECCOM contains values which determine whether the DMS can be used in the update mode or the read only mode.

o Description of Modification

The variable RFLG is tested to distinguish between interactive and Fortran-interface environments. In the interactive environment, the BEGIN command line is checked for the :L suffix. If it is found, then an attempt is made to assign the data base lock file. It it is unavailable, a message is sent to the terminal and the program terminates. If it is available, then the codes in common block SECCOM are set for the update mode. If the :L suffix is not found, the codes in SECCOM are set for read only mode. If RFLG indicates that the task is in the Fortran-interface environment, then the codes in SECCOM are set for the update mode.

An additional modification is that unit 14 is closed if a new data base is being attached, so that there will be no problem in assigning the new data base's lock file.

6.1.10 CONTROL AUFILE, CAUFIL

This subroutine is modified to search the command line for an optional input, the number of card images per logical record, and pass that value on to subroutine AUFILE.

- Input Modification

The add from file (AF) and update from file (UF) commands have an optional 'n' suffix, where n is 1, 2, or 3.

- Output Modification

The value of the optional command suffix is passed on in the calling arguments to subroutine AUFILE.

- Description of Modification

After extracting the format numbers from the command line, the n suffix is searched for. If it is not found, the value is set to zero. If it is found, its value is read. The value then becomes the third input argument in the call to subroutine AUFILE.

6.1.11 CHANGE FIELD CONTROL ROUTINE, CFCR

o <u>Input Modification</u>

None.

o <u>Output Modification</u>

None.

o <u>Description of Modification</u>

In building the internal format buffer for the CF command, the first record of the object set is retrieved to get the format number. This routine is changed so that if the record does not exist in the data base, the next record is retrieved to get the format, looping until a good retrieval occurs.

6.1.12 MAIN COMMAND INTERPRETER, CIMAIN

o Input Modification

None.

o Output Modification

Possible new message "XX COMMAND NOT ALLOWED" to unit 7, where XX is an update command mnemonic.

o Description of Modification

The security array, SECURE, in common block SECCOM, is tested for each input command. If the command is not to be allowed for this user, the program now writes a message back to the user instead of just ignoring the command.

6.1.13 REPORT COMMAND INTERPRETER, CIRP

o <u>Input Modification</u>

None.

o <u>Output Modification</u>

None.

o <u>Description of Modification</u>

A new check is made on the first clause set off by commas in the RP and JP commands. If this clause beings with the characters "CS", then the next characters up to the comma (two maximum allowed) are interpreted as a decimal number. This number will then be used as the number of spaces to place between all output fields of the command. If the clause is omitted, the column spacing defaults to two spaces.

6.1.14 STATISTICAL COMPUTATIONS ROUTINE, CMPUTE

- **Input Modification**

  None.

- **Output Modification**

  None.

- **Description of Modification**

The range of date values in the LACIE format (YDDD) is changed from 1/1/70 through 12/31/79 to the new range from 1/1/77 through 12/31/86, for use by the CM command.

C-4

6.1.15 DISPLAY A FORMATTED RECORD ROUTINE, DISFMT

- **Input Modification**

  None.

- **Output Modification**

  None.

- **Description of Modification**

The routine now writes as many as 252 characters to the output file instead of just 120, when the DF or JF command is executed.

6.1.16 DISPLAY FORMAT DEFINITION, DISPDD

- **Input Modification**

  None.

- **Output Modification**

  None.

- **Description of Modification**

Besides displaying the contents of the format requested in the FO command, the format number is now also displayed.

6.1.17 INTERNAL RECORD DISPLAY, DISPLA

- **Input Modification**

  None.

- **Output Modification**

  None.

- **Description of Modification**

The DI command now writes as many as 252 characters on one record starting in column two if the output is not the terminal. Also the printing of the record ID is bypassed if the output is not the terminal.

6.1.18 DATE-INTEGER CONVERSION, DTEINT

This subroutine is modified to accept LACIE format dates in the range 1/1/77 through 12/31/86.

- Input Modification

None.

- Output Modification

None.

- Description of Modification

The base year is changed from 1970 to 1977, and the internal data table of the accumulated days per year is adjusted for the new ten-year range.

6.1.19 TERMINATION, END

This subroutine is modified to provide the facility for restarting another task which has suspended itself after calling on the DMS to perform some function.

o Input Modification

The common block RSMFLG is now included in the subroutine and has variables RFLG and RTSK.

o Output Modification

A message is written to the message file if the return status from the resume directive is no good.

o Description of Modification

Code has been inserted to branch on the value of RFLG. If RFLG equals zero, the END subroutine assumes that the DMS was executed from the terminal and a STOP is executed. If RFLG equals two, END assumes that the DMS was executed from a non-resumable runstream, and a CALL EXIT is executed. If RFLG equals one, END does a CALL RESUME with the task name (from RTSK) to be resumed. The return status is then checked. If it is good, a CALL EXIT is executed. If it is bad, a message with its value is written to the message file, and a STOP is 'NEG RESUME STAT' is executed to indicate the situation.

6.1.20 FAMILY TREE FORMAT RETRIEVAL, FTFMT

o <u>Input Modification</u>

None.

o <u>Output Modification</u>

The third argument, ERR, is an output variable and now takes on the following values:

1 - unidentified field name
2 - missing ancestor of existing child
3 - missing lowest level record
4 - missing format record
Unchanged from input - no detected error

o <u>Description of Modification</u>

The output error argument has been expanded in range to be more definitive about which error occurred.

6.1.21 GET CHILD, GETCLD

This subroutine is modified to conform to the new record ID calculation algorithm.

o **Input Modification**

None.

o **Output Modification**

None.

o **Description of Modification**

For each parent record ID of the input set, the chain of child record ID's is traced. Each one is compared to the parent by setting the Acquisition Date portion equal to zero. Each child record ID that belongs to an input parent record ID is passed on the output set.

6.1.22 GET PARENT, GETPAR

This subroutine is modified to conform to the new record ID calculation algorithm.

- Input Modification

None.

- Output Modification

None.

- Description of Modification

As each record ID of the input set is retrieved, the Acquisition Date portion is zeroed, and if a new parent record ID is generated, it is passed to the output set.

6.1.23 PRINT HEADER ROUTINE, HEADER

- **Input Modification**

  None.

- **Output Modification**

  None.

- **Description of Modification**

The text which is to be printed as the header is searched for the character string $$DATE$$$. If it is found, it is replaced by the current date in a DD-MMM-YY format. Similarly, the current time replaces the character string $$TIME$$ in a HH:MM:SS format.

6.1.24 CHARACTER TO NUMBER CONVERTER, INPARM

o Input Modification

None.

o Output Modification

The output integer, which is accessed through the name, INPARM, of this function subprogram, may now be negative.

o Description of Modification

The first non-blank character of the input field is checked for a minus character. If it is found, the output value is set negative.

6.1.25 JOINT-FORMATTED AND DISPLAY-FORMATTED CONTROL ROUTINE, JFDFCR

- **Input Modification**

  None.

- **Output Modification**

  None.

- **Description of Modification**

In building the internal format buffer, the first record of the object set is retrieved to get the format number. This routine is changed so that if the record does not exist in the data base, the next record is retrieved to get the format, looping until a good retrieval occurs.

6.1.26 JOINT-SELECT-NONKEY AND SELECT-NONKEY CONTROL ROUTINE, JNSNCR

o <u>Input Modification</u>

None.

o <u>Output Modification</u>

None.

o <u>Description of Modification</u>

In building the internal format buffer, the first record of the object set is retrieved to get the format number. This routine is changed so that if the record does not exist in the data base, the next record is retrieved to get the format, looping until a good retrieval occurs.

6.1.27 GENERATE PARENT IDENTIFICATION, PRNTID

This subroutine is modified to conform to the new record ID calculation algorithm.

- Input Modification

None.

- Output Modification

None.

- Description of Modification

To calculate the parent record ID from the child record ID, the Acquisition Date portion of the child record ID is set to zero.

6.1.28 SORT SET, SORTS

o <u>Input Modification</u>

None.

o <u>Output Modification</u>

None.

o <u>Description of Modification</u>

When the joint sort command, JS, is used, this routine calculates the parent record ID from the child record ID. This calculation has been revised to treat the parent/child record ID relationship as it is defined for LIVES.

6.1.29 SPECIFY SET, SPCSET

- **Input Modification**

  None.

- **Output Modification**

  None.

- **Description of Modification**

The routine has been revised to use the first forty characters of an input line to generate a record ID instead of just the first twenty. Also, it no longer halts input when a blank character is encountered in column one of the input line.

6.1.30 SQUEEZE OUT EXTRANEOUS BLANKS, SQZE

o <u>Input Modification</u>

None.

o <u>Output Modification</u>

None.

o <u>Description of Modification</u>

When an up arrow character (circumflex character on some keyboards) is detected as part of a text string in the CF, DF, JF, SN, JN, RP, or JP commands, it is changed to the type of quote character (single or double) being used to delimit the text string.

6.1.31 STATUS TABLE DISPLAY, STATUS

o <u>Input Modification</u>

None.

o <u>Output Modification</u>

None.

o <u>Description of Modification</u>

The writing of a status table entry for inspection by the user is now done to the message file (internal unit number 7) instead of the report file (internal unit number 12).

6.1.32 TRANSFORM, TFORM

This subroutine is modified to not transfer a field of blanks if the "from" format field type is type three. This allows a standardized input format to be used for updates, allowing fields to be changed only when new data appear.

- Input Modification

The input format's type column contains the integer value three whenever this action is desired.

- Output Modification

Blank fields are not transferred to the output record buffer when their field types are three.

- Description of Modification

As each field is to be transferred, its input type is checked for a three. If a three is found, the field is checked for all blanks. If all blanks are found, no transfer is made, otherwise the field contents are transferred from the input to the output buffers.

6.1.33 TRANSFORM TO WORKING BUFFER, TFORMW

- **Input Modification**

  None.

- **Output Modification**

  None.

- **Description of Modification**

This routine was changed to bypass its processing if the JP command has been used, but no fields are needed from the parent record.

6.1.34 COMMAND ACCESS CONTROL ROUTINE, UNLOCK

- Input Modification

  None.

- Output Modification

  None.

- Description of Modification

This routine has been made to do nothing in LIMS because users are granted either read-only or full-update access already by the use of the :L suffix on the BE command.

6.2 DATA BASE TRANSACTION COPY SUBROUTINE

6.2.1 DATA BASE TRANSACTION COPY, COPYTF

Each of the functional processors except the GHIT processor writes its individual transactions (data base updates) to a separate file. This COPYTF subroutine is called at the end of the processor to collect all of that processor's transaction files into one file which the processor can then send to LIMS via the EXCDMS subroutine to be used to update the data base.

o Input

1. The name of an array which contains the file name, including device (if not DBO:) and UIC (if not standard one), of the processor's transaction files. The type is not to be included as part of the file name.
2. Integer *2 number of valid characters in the file name array specified in the first argument.
3. Integer *2 unit number available for assigning a version file.
4. Integer *2 unit number available for assigning transaction files.
5. Integer *2 unit number available for assigning the update file.
6. Integer *2 processor or query flag with values:
   0 = called by major processor (EXTRCT, CONDTN, SCRNTR, or CCTGEN).
   1 = not called by a major processor.

o Output

There are no output arguments.

o Processing Description

The file type .VRS is appended to the input file name to create the name of the version file. This file is opened and a current version number read from it. If there was no version file, a new one is created and the current version number is set to zero. The current version number is incremented by one. The file type .UPD is substituted for .VRS and a new or existing update file is opened.

Then .TRN; replaces .UPD and the current version number is converted to octal characters and appended to the file name. This version of the transaction file is then opened and its contents transferred to the update file. This transaction file is then closed, the current version number incremented by one, a new transaction file name generated, and the transferred to the update file is made again. This processor continues until some particular version number of the transaction file can not be assigned. At this point, the current version number is decremented by one to reflect the highest good transaction file version number used, and it is written back out to the version file. The version file is closed, an end-of-file written on the update file, the update file closed, and a return to the calling program is made.

6.3 EXISTING PDP-11 AND IMAGE-100 SOFTWARE

In addition to the standard RSX-11D operating system and utilities, two special purpose software packages already in the DLT computer software libraries must be used. One software package ("fast video") increases disk and tape I/O transfer rates by eliminating use of intermediate RSX-11D buffers. The other software package is required for communication with the IMAGE-100 display hardware.

6.3.1 FSTVID

Consists of a package of subroutines for performing efficient disc and tape I/O on PDP 11 computers. FSTVID was developed to bypass the actual reading and writing functions of the PDP 11 File Control Success (FCS) which contain restrictions due to block size limitation and overhead.

The following entry points are provided by FSTVID:

FVOPEN - opens a disc on tape file

FVREAD - reads a record from disc a tape

FVWRIT - writes a record to disc a tape

FVWAIT - waits for completion of previous I/O operation

FVCLOS - closes a disc on tape file

FVDLTE - deletes an open disc file

FCDSET - sets the start block number for the next I/O

FVWND - rewinds a tape or sets the start block to 1 for I/O to disc

PRSFNM - parses a file name and sets up a data set description (called by FVOPEN)

A complete description of these subroutines can be found in reference 2.5-6.

6.3.2 IMAGE-100 I/O ROUTINES

Two modules of the basic I-100 software are required for the screening and translation programs. The file [100,4]SPCUR.OBJ contains routine IRK which reads the position of the cursor as set by the user with the joystick. The library [100,4] IMALIB contains IRV which reads a line from a refresh memory, and routine IWV which writes a scan line to the refresh memory.

Further details can be found in reference 2.5-6.

7. DATA BASES AND SPECIAL FILES

LIVES operates through independent programs which make use of the following data bases and special files.

Full Scene Data Base, produced by the High Density Tape Reformatting System, HDTRS (7.1).

Search Area Data Base, which contains imagery data needed for processing the data for each area of interest (7.2).

Translation Control Image Data Base, which contains reference images to support the translation function (7.3).

Screening Map Data Base, produced by the Conditioning Processor (7.4).

In addition, the Process Control and Status Data Base (7.5) defines the areas of interest for which Landsat data are needed by users, as well as status, control, and other information required for computations in the various system processes.

There will also be a System Parameter Data File (7.6), which maintains overall parameters of the system. This will be accessible to any independent program that needs it, but it will not be modified by any such program.

Processor command files (7.7), coded in the LIMS language, are also maintained in LIVES.

Each of these files and data bases is described in a separate section below.

7.1 FULL SCENE DATA BASE

The format of the imagery data in these files is furnished in reference 2.3-2.

7.2 SEARCH AREA DATA BASE

The Search Area data base contains data extracted from the Full Scene Data Base, corresponding to areas of interest. Data for each area of interest resides on different files. There are two types of files, imagery-data and non-imagery data; the latter consists of header, ancillary, annotation, and trailer data.

The file name for both file types is a function of user ID and Area of Interest ID. The two digit User ID is concatenated with the four digit Area of Interest ID. The file type for the imagery data is SAI, and the type for the non-imagery data is SAN.

Each imagery-data file is composed of a header record followed by imagery data records. Each record is 512 characters. Figure 7.2-1 depicts the format of the header. Imagery data are continuous string bits blocked into 512 bytes records, as shown in Figure 7.2-2.

Non-imagery data are composed of records for each of its components.

7.3 REFERENCE IMAGE DATA BASE

The format of the images is the same as specified for search area files specified in Section 7.2

7.4 SCREENING MAP DATA BASE

The format of these one-channel images is also specified in Section 7.2.

Figure 7.2-1 Non-Image Data Record Format

Bytes	Word	Parameter	Description
1-2	1	NC	Number of channels in image file.
3-4	2	NP	Number of pixels per channel per scan.
5-6	3	NSL	Number of scan lines in image file.
7-8	4	NDB	Number of first data block.
9-10	5	NANHED	Number of ancillary header blocks.
11-12	6	N	Format of ancillary header N=1 Universal 2 Landsat 3 LARSYS 4 Classification/cluster map 5 Registered image 6
13-14	7	NCHED	Number of channel descriptor blocks.
15-26	8-13	SCNID	Scene ID (12 ASCII characters).

Figure 7.2-2 Image Data Format

Byte	Description
1	Data for channel 1 pixel 1 scan 1
2	2
3	3
.	.
.	.
.	.
NP	NP
NP+1	Data for channel 2 pixel 1
NP+2	2
NP+3	3
.	.
.	.
.	.
NPx2	NP
NP*(NC-1)+1	Data for channel NC pixel 1
NP*(NC-1)+2	2
NP*(NC-1)+3	3
.	.
.	.
.	.
NC*NP	NP
NC*NP+1	Data for channel 1 pixel 1 scan 2
.	.
.	.
.	.

7.5 PROCESS CONTROL AND STATUS DATA BASE

The PC&S data base is used to (1) define areas of interest, (2) support system computations, (3) support system control, and (4) provide system statusing information. The contents of the PC&S data base is derived from area of interest definition, GHIT tape, and the processing functions.

There are three types of records in the PC&S data base:

- o Area of Interest Description - Defines those items of an area of interest common to all image acquisitions (see figure 7.5-1)
- o Scene Descriptions - Describes scenes from the HDT (see figure 7.5-2)
- o Acquisition Descriptions - Contains data describing an area of interest acquisition and the processing of this acquisition (see figure 7.5-3)

There will exist at least two versions of the PC&S data base. They are:

- o Daily PC&S data base - This data base contains only those Acquisition Description and their associated Area of Interest descriptions and Scene Descriptions from a given day. It is used to control and status report on a given day's activity. The use of a small data base for daily processing minimizes the system overhead for data management activities
- o Master (Archive) PC&S data base - This data base contains Area of Interest Descriptions, Descriptions and Scene Descriptions from all days of HDT processing. This data base is used for weekly, monthly, and other periodic and aperiodic reporting as well as maintaining Area of Interest Descriptions.

The GHIT Processor will retrieve those Area of Interest Descriptions need for processing data for a given GHIT Tape and build a daily base using these records and the Acquisitions Description and Scene Description Records which it builds. The Acquisition and Scene Description records are added to the Master PC&S Data Base by the Archieve Program.

Figure 7.5-1 Area of Interest Description Record

Mnemonic	Description	Length	Type
USERID	User ID	2	I
AILNES	AI - Number of Lines	5	I
AIPXLS	AI - Number Pixels	5	I
REGQTS	Registration Quality Threshold - Screen	1	I
REGQTS	Registration Quality Threshold - Reject	1	I
CLDPTH	Cloud Percent Threshold	2	I
AINO	Area of Interest Number	4	I
COUNTR	Country	6	A
REG	Region	2	A
ZONE	Zone	4	A
STR	Strata	4	A
PC	Priority	2	A
TY	Area of Interest Type	1	A
CRPCOD	Crop Code	2	A
AILAT	Latitude/Direction	5	I
AILONG	Longitude/Direction	3	I
ACQSRT	Acquisition Start Date	4	D
ACQSTP	Acquisition Stop Date	4	D
PWRSRP	Primary WRS (Row, path)	6	I
SWRSRP	Secondary WRS (Row, path)	6	I
FLMFLG	Film Flag	1	A
BNREQE	Band Numbers required for extraction	5	I

Figure 7.5-2 Scene Description Record

Mnemonic	Description	Length	Type
HDTID	HDT Tape ID	20	A
IMGID	Image ID	12	A
NOBNDS	Number of Bands on Tape	1	I
ACQDAT	Acquisition Date	4	D
SCNCLA	Scene Cloud Assessment	2	A
REGPFL	Regenerated Product Flag	1	A
WRSDES	WRS Designator	6	I
WRSOFF	WRS Offset	2	I
MISSNO	Mission Number	1	I
RESTYP	Resampling Type	1	A
QAGEOM	Quality Assessment of Geographical Model	1	I
FMTLAT	Format Center Lat/Dir	5	I
FMTLON	Format Center Lon/Dir	3	I
PLYBDR	Playback/Direct Flag	1	A
ASCDES	Ascending/Descending Flag	1	A
SUNZLA	Sun Elevation Angle	2	I
SUNAZA	Sun Azimuth Angle	3	I
DATGHI	Date GHIT Run	4	D
HDTPDT	HDT Processed Date	4	D
SCENNO	Scene Number	3	I
BNREQE	Band Numbers Extracted	5	I

Figure 7.5-3 Acquisition Description Record

Mnemonic	Description	Length	Type
USERID	User ID	2	I
HDTID	HDT Tape ID	20	A
AIID	Area of Interest ID	4	I
IMGID	Image ID	12	A
NOBNDS	Number of Bands on Tape	2	I
ACQDAT	Acquisition Date	4	D
CURDAT	Date GHIT Run	4	D
PREJRS	Preprocessing Reject Reason	1	A
SCRREG	Screening & Registration	1	A
SACLDA	Search Area Cloud Assessment	1	A
EXTRRC	Extraction Reject Reason code	1	A
SRGDAT	Screen & Register Date	4	D
SRJCOD	Screen Reject Code	1	A
CCTDAT	CCTDate	4	D
CCTNO	CCT Number	TBD	
BIASFC	Bias Factors	TBD	
GAINFC	Gain Factor	TBD	
NPT	Number of Pixel Translated	3	I
NLT	Number of Lines Translated	3	I

7.6 SYSTEM PARAMETER FILE

The system parameter file provides a method of modifying system parameters without recompiling and task building the various processors. Each processor will initiate its processing by reading the system parameters it uses. Figure 7.6-1 describes this single-record file.

Figure 7.6-1- System Parameter File Description

Parameter	Start Character	Length	Format
Full Frame Pixels	1	5	I5
Full Frame Lines	7	5	I5
Cloud Detection Threshold Value	13	3	I3
Percent Value for Excessive Cloud Cover	17	2	I2
Default Number of Pixels to Add for Search Area	20	3	I3
Default Number of Lines to Add for Search Area	24	3	I3
Default Area of Interest Number of Line	28	4	I4
Default Area of Interest Number of Pixels	33	4	I4
Quality Code Upper Threshold	38	1	I1
Quality Code Lower Threshold	40	1	I1
Master Data Base Disk Drive Number	42	1	I1
Daily and Search Area Data Base Disk Drive Number	44	1	I1
Reference Image Data Base Disk Drive Number	46	1	I1

7.7 PROCESSOR COMMAND FILES

This section summarizes the LIMS command files used by the various processors throughout the system. Command files will be coded in the LIMS language therefore require no compilation or task building. Command files which update the PC&S data base will require an input format describing the files from which input data are to be read. Command files which produce output to be read by a LIVES processor usually require an output format for the file to be written. Subsequent paragraphs identify the processor and the files they use.

7.7.1 PC&S DATA BASE ADD PROGRAM COMMAND FILES

- o Input File - adds a group of area of interest records contained on a file to the Master PC&S data base (See Reference 2.5-5 for file format)
- o Output File - writes specified records (all fields) to file

7.7.2 PC&S DATA BASE UPDATE PROGRAM COMMAND FILES

- o First Output File - writes specified areas of Interest (all fields) to a file
- o Input File - updates a group of areas of interest from data contained on a file in the Master PC&S data base (See Reference 2.5-5 for file format)
- o Second Output File - Same as first but writes to different file

7.7.3 PC&S DATA BASE DELETE PROGRAM COMMAND FILE

- o Input File - deletes areas of interest specified on a file

7.7.4 GHIT PROCESSOR COMMAND FILES

- Reads A of I Description Records, selects A of I Description Records based on WRS Primary and Secondary Row/Paths and writes them in data base format to a file from the Master PC&S data base. WRS Row/Paths are dynamically specified on another file.
- Area of Interest Description Add - adds area of interest description records contained on a file to the Daily PC&S data base.
- Acquisition Description Add - adds Acquisition Description Record from a file in data base format to the Daily PC&S data base.
- Scene Description Add - adds scene description records from a file in data base format to the Daily PC&S data base.

7.7.5 EXTRACT PROCESSOR COMMAND FILES

- Area of Interest/Acquisition Description Select File - selects all acquisition Descriptions from the data base, sort on scene number, and writes data from the Acquisition Record and associated Area of Interest of file. The file contains the following fields; Area of Interest ID, User ID, Acquisition Date, band numbers, Area of Interest Location and size data.
- Scene Description Select File - selects all scene descriptions from the Daily PC&S data base, writes them to a file.
- Extract Processor Update - updates Acquisition Records from records contained on a file. The file contains the following fields; extract reject reason code, screening & registration flag.

7.7.6 CCT WRITE PROCESSOR COMMAND FILES

- General Input File - selects all Acquisition Description Records from the Daily PC&S data base ready for output to tape, sorts them on User ID and writes data to a File. The data includes screen & register data, extraction reject reason code, Preprocessing reason reject, Bias & gain factors, Band numbers extracted, Pixel translation value, line translation value.

- Specific Input File - selects specified Acquisition Description Records from the Daily PC&S data base, sorts them according to user ID and writes them to a file. The specified records will dynamically have been written to a file by the CCT write processor. The updated fields will be the same as for the general input file.

- Update File - the Daily PC&S data base Acquisition Description records will be updated from a file. The file will contain the following fields; CCT number and CCT date.

7.7.7 SCREENING & TRANSLATION PROCESSOR COMMAND FILES

- Input Selection File - selects all acquisition records for A of I's requiring screening or translation for a given User ID. The Screening & Translation Processor will dynamically generate a command file which selects all Acquisition records for a User ID and reassign the Input selection file, which will then determine those records which need screening and write a file containing the resultant data. The fields written to this file are Area of Interest I.D., image I.D., screening and registration flag, bias and gain factors, scene number, and band numbers extracted.

  The screening and translation processor may limit the selection to specific A of I's by writing a file of A of I ID's and performing a specify set command rather than a select type of command on the dynamic file.

- Update File - updates Acquisition Description records in the Daily PC&S from data contained on a separate file. This file will contain the following fields; screen reject code, screen & register date, pixel translation value, line translation value.

APPENDIX

APPENDIX

NATIONAL AERONAUTICS AND SPACE ADMINISTRATION NEW TECHNOLOGY REPORT	NT CONTROL NO. (Official use only)

INSTRUCTIONS

This report form may be used when reporting inventions, discoveries, improvements, or innovations to NASA. Use of this report form is optional; provided, however, that whatever report format is used contain the essential information requested herein.

Please provide information requested in each section as follows:

Section I - A description of the problem that motivated the technology development.

Section II - A technically complete and easily understandable description of the new technology that was developed to solve the problem or meet the objective.

Section III - The unique or novel features of the technology and the results (or benefits) of its application.

Section IV - The inclusion or listing of any pertinent additional documentation or references which aid in the understanding or application of the new technology.

In completing each section, use whatever detail deemed appropriate for a "full and complete disclosure," as required by the New Technology or Property Rights in Inventions Clause. For further guidance as to what constitutes a satisfactory report, please refer to NMB 2170.3, Documentation Guidelines for New Technology Reporting.

Available additional documentation which provides a full, detailed description should be attached, as well as any additional explanatory sheets where necessary.

1. TITLE
SCREEN, a Procedure for Automatically Detecting Garbled Data, Clouds, Snow, Cloud Shadows, and Water in Landsat MSS Data

2. INNOVATOR (S) (Name and Social Security No.)
Peter F. Lambeck (364-52-3818) Gene S. Thomas (378-42-5017)
Richard Kauth (484-34-8523)

3. EMPLOYER (Organization and division)	4. ADDRESS (Place of performance)
Environmental Research Institute of Michigan Information Systems & Analysis Dept.	P.O. Box 8618 Ann Arbor, Michigan 48107
5. NASA PRIME CONTRACT NO. NAS9-14988	6. CONTRACTOR DISCLOSURE NO.

SECTION I - DESCRIPTION OF THE PROBLEM THAT MOTIVATED THE TECHNOLOGY DEVELOPMENT (Enter Appropriate Description of Problem Objective; B.-Key or Unique Problem Characteristics; C.-Past History, Prior Techniques; D.-Limitations of Prior Techniques)

With the increased use of multispectral scanner data from satellites there has been a growing need to identify and to exclude garbled data and data from clouds, cloud shadows, and snow from data processing (unless these are items of interest). There has also been a need to exclude data over water when calculating haze diagnostics for recently developed preprocessing algorithms (e.g., the XSTAR algorithm, developed at ERIM) which compensate satellite MSS data for the effects of atmospheric haze without using ground measurements. In the past such data editing has generally relied on manual procedures which were time consuming and costly. The SCREEN algorithm is an automatic and inexpensive computer algorithm for accomplishing this editing function to suit the needs both of preprocessing algorithms and of MSS data processing.

ORIGINAL PAGE IS OF POOR QUALITY

PRECEDING PAGE BLANK NOT FILMED

SECTION II - TECHNICALLY COMPLETE AND EASILY UNDERSTANDABLE DESCRIPTION OF NEW TECHNOLOGY THAT HAS BEEN DESIGNED TO SOLVE THE PROBLEM OR MEET THE OBJECTIVE [illegible] A-Specific Description of new; B-State of development; C-Operation as a unit; D-Functional operation; E-Supportive theory; F-Engineering specifications; G-Physical [illegible]; H-Dimensions, [illegible]; I-Parts or ingredients listed; and J-Maintenance, reliability, safety factors)

The SCREEN algorithm was developed to be applied to Landsat II LACIE segment data (and Landsat II full frame data from CCT's produced before July 16, 1975). For Landsat 1 data, or for Landsat II full frame data from CCT's produced on or after July 16, 1975, corrections to simulate the Landsat II LACIE segment data calibration first need to be applied before initiating the SCREEN procedure. These corrections are defined in the references.

The SCREEN algorithm is applied pixel by pixel throughout a Landsat data set. Having suitably calibrated data (as explained above), the first step of SCREEN is to compensate the data for differences in illumination, using a cosine correction for the sun zenith angle, and to rotate the data within the 4 dimensinal Landsat data space in a way which helps to isolate physically meaningful characteristics. Hence, each pixel data vector x is initially transformed into another data vector z, by

$$z = R^T \frac{\mu_o'}{\mu_o} x \qquad (1)$$

with $\mu_o' \equiv \cos 39°$ and with μ_o representing the cosine of the sun zenith angle for the data acquisition to be edited. The quantities μ_o' and μ_o are scalars, x and z are vectors (having one value or component for each of the Landsat bands 4 through 7), and R is a rotation matrix defined by

$$R = \begin{pmatrix} .33231 & -.28317 & -.89952 & -.01594 \\ .60316 & -.66006 & .42830 & .13068 \\ .67581 & .57735 & .07592 & -.[illegible] \\ .26278 & .38833 & -.04080 & .88232 \end{pmatrix}$$

The significance of the axial directions chosen for the rotated data space is discussed in the references.

The next step of the SCREEN procedure is to circumscribe the usual Landsat data distribution, using several separate linear thresholds, and to label any pixels with outlying signal vectors as garbled data. The remaining "good" data is then split up into separate, mutually exclusive subregions to identify in succession dense clouds (or snow), diffuse clouds (or localized dense haze concentrations atypical of normal Landsat scenes), water, and cloud shadows. This procedure is as follows:

A pixel is labeled as garbled data if

ORIGINAL PAGE IS OF POOR QUALITY

$$z_4 > z_{4_{max}} \qquad (z_{4_{max}} = 16.) \qquad (3)$$

$$\text{or if } z_4 < z_{4_{min}} \qquad (z_{4_{min}} = -12.) \qquad (4)$$

[illegible]

ORIGINAL PAGE IS OF POOR QUALITY

Section II (Cont.)

or if $z_3 + .18750\, z_1 < z_{3_{min}}$ $(z_{3_{min}} = -14.)$ (6)

or if $z_2 + z_1/10. < z_{2_{min}}$ $(z_{2_{min}} = -20.)$ (7)

or if $z_2 + z_1/1.8 > z_{5_{max}}$ $(z_{5_{max}} = 156.)$ (8)

or if $z_2 - z_1/1.2 > z_{6_{max}}$ $(z_{6_{max}} = -8.)$ (9)

A pixel is labeled as <u>cloud</u> if not labeled garbled, and

$z_1 > z_{C_{max}}$ $(z_{C_{max}} = 100.)$ (10)

and $z_3 + z_1/10. < z_{C_{min}}$ $(z_{C_{min}} = -7.5)$ (11)

A pixel is labeled as <u>diffuse cloud</u> (dense haze) if not labeled garbled or cloud, and

$z_1 > z_{H_{max}}$ $(z_{H_{max}} = 69.)$ (12)

and $z_3 + z_1/7. < z_{H_{min}}$ $(z_{H_{min}} = -3.25)$ (13)

NOTE: Sufficiently dense coverings of snow tend to be placed in the cloud or diffuse cloud categories.

A pixel is labeled as <u>water</u> if not labeled garbled, cloud, or diffuse cloud, and

$z_1 < z_{W1}$ $(z_{W1} = 75.)$ (14)

and $z_2 + z_1/16. < z_{W21}$ $(z_{W21} = -.5)$ (15)

and $z_4 < z_{W4}$ $(z_{W4} = 1.5)$ (16)

and $z_2 + z_4 < z_{W24}$ $(z_{W24} = -4.5)$ (17)

and $z_2 + z_1/2. + z_3 + 5. * z_4 < z_{W2134}$ $(z_{W2134} = 10.)$ (18)

NOTE: If a pixel is labeled <u>water</u> by the above procedure, a subcategory <u>cloud shadow over water</u> may be identified if, in addition to satisfying the above tests,

$z_2 - .4 * z_1 > z_{WS}$ $(z_{WS} = -12.2)$ (19)

The <u>cloud shadow over water</u> category is sometimes a false alarm under cloud shadows (usually caused by striping effects in the data).

SECTION II (Cont.)

A pixel is labeled as cloud shadow if not labeled garbled, cloud, diffuse cloud, or water, and

$$z_2 - .4 * z_1 - .6 * z_3 - .6 * z_4 > z_{S2134} \qquad (z_{S2134} = -9.) \qquad (20)$$

and

$$z_1 - .4 * z_2 < z_{S12} \qquad (z_{S12} = 37.75) \qquad (21)$$

Any pixel which is left unlabeled after the above tests is then acceptable for processing. Our practice has been to store the labeling output from the SCREEN algorithm in an added data channel, which is then carried along with the data for reference or use in subsequent processing.

SECTION III - UNIQUE OR NOVEL FEATURES OF THE TECHNOLOGY AND THE RESULTS (OR BENEFITS) OF ITS APPLICATION *(Enter as appropriate A.-Novel or unique features; B.-Development or conceptual problems; C.-Operating characteristics, test data; D.-Analysis of capabilities; E.-Source of error; and F.-Advantages/shortcomings)*

The SCREEN algorithm is unique in its application to all four Landsat bands, its development from a detailed understanding of the physical interpretation of Landsat data distributions, and the refinement of its decision thresholds.

The location of the SCREEN thresholds was determined by studying 13 LACIE acquisitions from North Dakota and Montana and 19 LACIE acquisitions from Kansas, carefully selected to be examples of particular screening problems. The separation of water, clouds, and cloud shadows from other [illegible], using SCREEN, is about as accurate as the Landsat spectral [illegible] itself [illegible]. There is some tendency for raise alarms to increase at [illegible] effects of striping in the Landsat data. Some improvement in the separation of clouds from bright fields could be [illegible] by allowing a few of the SCREEN thresholds to be adjusted separately for each scene by user interaction. However, as it stands, the SCREEN procedure is reasonably effective both for removing confusing data from haze diagnostic calculations and for editing the input to a classifier, without supervision. We do recommend, nevertheless, that users monitor its performance visually.

The SCREEN algorithm has so far been tested only on Landsat agricultural data. Its performance characteristics on non-agricultural data are not yet known.

ORIGINAL PAGE IS
OF POOR QUALITY

SECTION III (Cont.)

SECTION IV - ADDITIONAL DOCUMENTATION *(Include or list below any pertinent documentation which aids in the understanding or application of the new technology. IF NOT TOO BULKY OR DIFFICULT TO REPRODUCE, INCLUDE COPIES WITH THIS REPORT. For those references or additional documentation available but NOT included in this report (due to their being nonessential to a basic understanding of the new technology and which may be costly to reproduce or handle) complete item d. below)*

A. AVAILABLE DOCUMENTS *(Check and complete)*						
		1. PAPERS, ARTICLES		4. ASSEMBLY/MFG. DRAWINGS		7. TEST DATA
	X	2. CONTRACTOR REPORTS		5. PARTS OR INGRED. LIST		8. ASSEMBLY/MFG. PROCED.
		3. ENGINEERING SPECS.		6. OPERATING MANUALS		9. COMPUTER TAPES/CARDS
	10. OTHER *(Specify)* Internal Memos					

B. INDICATE THE DATES OR THE APPROXIMATE TIME PERIOD DURING WHICH THIS TECHNOLOGY WAS DEVELOPED *(i.e., conceived, constructed, tested, etc.)*

June 1976 - August 1977

C. LIST THE FIRST PUBLICATION OR PUBLIC DISCLOSURE OF THE NEW TECHNOLOGY, AND DATES

Contract Final Report:

Peter F. Lambeck, Signature Extension Preprocessing for Landsat MSS Data, ERIM 122700-32-F, Environmental Research Institute of Michigan, Ann Arbor, Mich., November 1977.

D. LIST THE DATES AND ANY PARTICULARLY PERTINENT PAGE NUMBERS OF OTHER PUBLICATIONS WHICH ARE AVAILABLE BUT NOT ATTACHED

P.F. Lambeck, "Revised Implementation of the XSTAR Haze Correction Algorithm and Associated Preprocessing Steps for Landsat Data", ERIM Memo Number IS-PFL-1916, November 1, 1977.

E. DEGREE OF TECHNOLOGICAL SIGNIFICANCE *(Check in your best judgment the statement which best expresses the degree of technological significance of this technology)*

☐ 1. MODIFICATION TO EXISTING TECHNOLOGY ☒ 2. SUBSTANTIAL ADVANCE IN THE ART ☐ 3. MAJOR BREAKTHROUGH

COMMENTS

ORIGINAL PAGE IS OF POOR QUALITY

SIGNATURE OF INNOVATOR(S)	DATE
[illegible]	11/10/77

INTERIM APPENDIX B

TO

"AS-BUILT" DESIGN SPECIFICATIONS

OF THE

LANDSAT IMAGERY VERIFICATION AND EXTRACTION SYSTEM

(LIVES)

LEC-12904 VOLUME 1, TEXT AND APPENDICES

December 1979

APPENDIX B

B.1 LIVES OUTPUT CCT

The CCT Processor of the LIVES creates a CCT in Universal Format as described in Section 6.0 of the Earth Resources Data Format Control Book, Publication Number PHO-TR543, JSC, October 1973.

The format and data source of the CCT header record are described in suceeding pages.

The legend for the data source follows:

SG - System generated

GHIT - Goddard HDT Inventory Tape

Data Sets

- o The length of the ancillary block of each data set is fixed at 70 bytes.
- o The first word (2 bytes) of each record is a counter giving the number of the physical record within the video data set.
- o Bytes 71-72 contain the scan line number.

LEC-12904

LIVES CCT HEADER FORMAT

BYTE	CONTENTS	NO. OF BYTES	DESCRIPTION	DATA SOURCE
1-32	HDTRS:LIVESØ...Ø	32	Computing System ID - EBCDIC Computing system producing this tape.	SG
33-52	AYDDDSØ...Ø	20	Tape Library ID (sequence number) - EBCDIC tape generation date.	SG
33	A	1	No meaning	
34	Y	1	Year	
35-37	DDD	3	Day number within year	
38	S	1	Daily tape sequence number	
39-52		14	Blank Fill	
53-60	ERTSØMSS	8	Sensor ID - EBCDIC	SG
61-63	DMY	3	Date of this tape generation	SG
61	D		Day of month - Binary	
62	M		Month number - Binary	
63	Y		Year - last two digits - binary	
64	S	1	Tape sequence ID - Binary First reel = 1	SG

ORIGINAL PAGE IS
OF POOR QUALITY

LIVES CCT HEADER FORMAT

BYTE	CONTENTS	NO. OF BYTES	DESCRIPTION	DATA SOURCE
65-66		2	Mission number - Binary 1 = Landsat 1 2 = Landsat 2 3 = Landsat 3 4 = Landsat 4	GHIT
67-68		2	Sample segment number - Binary	SG
69	0	1	Line - Binary	SG
70	0	1	Run - Binary	SG
71-72		2	Orbit number of new data - Binary	GHIT
73-80	TTSMHDMY	8	Time of center scan of the Landsat scene containing the sample segment to the last ten seconds.	
73-74	TT	2	Tenths of milliseconds - Binary	GHIT/SG
75	S	1	Seconds - Binary	GHIT
76	M	1	Minutes - Binary	GHIT
77	H	1	Hours - Binary	GHIT
78	D	1	Day of month - Binary	GHIT
79	M	1	Month number - Binary	GHIT
80	Y	1	Year - last 2 digits - Binary	GHIT
81-88		8	Channel active in this job - up to 64 channels 1 bit per channel starting left to right (MSB to LSB). Video data always appears in the order indicated here. 1 = active, 0 = inactive binary	SG
81	11110000	1	Channels 1-8	
82-88	0	7	Channels 9-64	
89	0	1	Processing flag - Binary 0 = raw data 1 = processed data from computing system	SG

ORIGINAL PAGE IS OF POOR QUALITY

LEC-12904

LIVES CCT HEADER FORMAT

BYTE	CONTENTS	NO. OF BYTES	DESCRIPTION	DATA SOURCE
90	4	1	Number of bands active in this job, Binary.	SG
91	8	1	Number of bits in a picture element, Pixel size - Binary.	SG
92-93	1	2	Byte location of start of video data within scan - Binary.	SG
94-95	0	2	Byte location of start of first calculation area within the scan - Binary.	SG
96-97	N	2	Number of video elements per scan within a single channel - Binary. N = Segment width.	SG
98-99	0	2	Number of calibration elements in the first calibration area within the scan in a single channel.	SG
100-101	P	2	Physical record size in bytes.	SG
102		1	Number of channels per physical record. This field refers to the second and subsequent records within the recording of a data set. Bytes 1785-1786 give the number of channels of data in the first record of a data set. If no. of elements per channel greater than 3K this field will equal 0.	SG
103	0	1	Number of physical records per scan per channel. This field is used only when the no. of elements per channel is greater than 3K. Otherwise it is equal to 0.	SG
104	1	1	Number of records to make a complete data set. Never zero.	SG
105-106	70	2	Length of ancillary block in bytes.	SG
107	0	1	Data Order Indicator 0 = Video ordered by channel 1 = Video ordered by pixel	SG

ORIGINAL PAGE IS
OF POOR QUALITY

LIVES CCT HEADER FORMAT

BYTE	CONTENTS	NO. OF BYTES	DESCRIPTION	DATA SOURCE
108-109	1	2	Start Pixel No. Number of the first pixel per scan on this tape referenced to start of scan. The first pixel in the original image is pixel number one.	SG
110-111	N	2	Stop Pixel No. Number of the last pixel per scan on this tape referenced to start of scan. N = Segment width	SG
112-623		512	Coefficients and exponents-of-ten to linearly translate parameter values from up to 64 channels to engineering units. Two bytes per coefficient or exponent with each pair of bytes expressed in signed Binary. Most significantly bit is a sign bit: 0 = +, 1 = -, remaining 15 bits are straight binary.	SG
112-239	0	128	A_0 Coefficients (2 bytes per channel)	
240-367	0	128	A_0 Exponents (2 bytes per channel)	
368-369	1	2	A_1 Coefficient for Band 1	
370-371	1	2	A_1 Coefficient for Band 2	
372-373	1	2	A_1 Coefficient for Band 3	
374-375	1	2	A_1 Coefficient for Band 4	
376-495	0	120	A_1 Coefficient (2 bytes per channel)	
496-623	0	128	E_1 Exponents (2 bytes per channel) To convert parameter value (C) to engineering units (y). $y = A_0 * 10^{E_0} + C * A_1 \; 10^{E_1}$	
624-687		64	Color code information One byte per channel in same order as 'channel active on this tape' indicator - Binary.	SG

ORIGINAL PAGE IS
OF POOR QUALITY

LIVES CCT HEADER FORMAT

BYTE	CONTENTS	NO. OF BYTES	DESCRIPTION	DATA SOURCE
			0 = Not active, no color assignment 1 = Red 2 = Green 3 = Blue	
688-751	0	64	Scale factors One byte per channel in same order as 'channel active on this tape' indicator.	SG
752	0	1	Offset constant - binary	SG
753	16	1	Word size of generating computer Gives size of smallest quantity in bits that machine can write on tape.	SG
754-1777		1024	Wavelengths of each channel - EBCDIC 8 bytes per limit, 16 bytes per channel - Milli microns.	SG
754-761	00000500	8	Channel 1 - EBCDIC - SHORT	
762-769	00000600	8	Channel 1 - EBCDIC - LONG	
770-777	00000600	8	Channel 2 - EBCDIC - SHORT	
778-785	00000700	8	Channel 2 - EBCDIC - LONG	
786-793	00000700	8	Channel 3 - EBCDIC - SHORT	
794-801	00000800	8	Channel 3 - EBCDIC - LONG	
802-809	00000800	8	Channel 4 - EBCDIC - SHORT	
810-817	00001100	8	Channel 4 - EBCDIC - LONG	
818-1777	0		Channel 5 - 64 NOT APPLICABLE	
1778		1	Number of data sets per physical record	SG
1779-1780		2	Address of start of second calibration within scan. If the scan has only on calibration area, this field will contain zero - Binary.	SG

ORIGINAL PAGE IS
OF POOR QUALITY

LIVES CCT HEADER FORMAT

BYTE	CONTENTS	NO. OF BYTES	DESCRIPTION	DATA SOURCE
1781-1782	0	2	Number of calibration elements in the second calibration area within the scan in a single channel. If the scan has only one calibration area, this field will contain zero - Binary.	SG
1783	0	1	Calibration source indicator - Binary LSB = second calibration area LSB + 1 = first calibration area 0 = low calibration source data present 1 = high calibration source data present	SG
1784	0	1	Fill zero.	SG
1785-1786		2	Number of channels in the first physical record of the data set.	SG
1787-1788	N	2	Total number of elements per scan per channel. N = Segment width.	SG
1789-1790	1	2	Pixel skip factor - Binary. The quantity to be added to the number of the last pixel processed to yield the number of the next pixel to be presented; e.g. 1 = process every pixel.	SG
1791-1792	1	2	Scan skip factor - Binary The quantity to be added to the number of the last scan processed to yield the number of the next scan to be processed; e.g. 1 = process every scan 2 = process the second scan, etc	SG
1793-2086	0	294	Zero fill.	
2087-2642		556	General annotation byte assignment for LACIE	
2087-2094		8	Peak sharpness - EBCDIC (Format is ±.X.XXXXX)	

ORIGINAL PAGE IS
OF POOR QUALITY

LIVES CCT HEADER FORMAT

BYTE	CONTENTS	NO. OF BYTES	DESCRIPTION	DATA SOURCE
2095-2102		8	Normalized peak to background ration - EBCDIC (Format is ±.XXXXX)	SG
2103		1	Manual registration flag. 00000000 - Automatic 00000001 - Manually	SG
2104			Zero fill flag - Binary. 0 = Sample segment contains on zero fill data 1 = Part of sample segment contains zero fill data	
2105-2106	0	2	Orbit number of reference data set - Binary	
2107-2109		3	Zero fill	
2110		1	Cloud cover - Binary Percent of 10x11NM search area covered by clouds	SG
2111		1	Zero fill	
2112-2120	ADDDHHMMS	9	ERTS Scene/frame ID number for reference data set - EBCDIC	GHIT
2112	A	1	A = ERTS mission number for reference data set	
2113-2115	DDD	3	DDD = Day number relative to launch at time of observation for reference data set	
2116-2117	HH	2	HH = Hour at time of observation for reference data set	
2118-2119	MM	2	MM = Minute at time of observation for reference data set.	
2120	S	1	S = Tens of seconds at time of observation for reference data set.	
2121	0	1	Zero fill.	SG

ORIGINAL PAGE IS
OF POOR QUALITY

LIVES CCT HEADER FORMAT

BYTE	CONTENTS	NO. OF BYTES	DESCRIPTION	DATA SOURCE
2122		1	FLAG-Binary-indicating whether a reference scene has been used for registration. 0 = Reference scene has not been used for registration. 1 = Reference scene has been used for registration.	SG
2123-2131	ADDDHHMMS	9	ERTS scene/frame ID number of new data-EBCDIC	GHIT
2123	A	1	A = ERTS mission number for new data	
2124-2126	DDD	3	DDD = Day number relative to launch at time of observation for new data.	
2127-2128	HH	2	HH = Hour at time of observation for new data	
2129-2130	MM	2	MM = Minute at time of observation for new data	
2131	S	1	S = Tens of seconds at time of observation for new data.	
2132	0	1	Zero fill.	
2133		1	Data quality classification - Binary 00000000 = Acceptable 00000001 = Marginal	
2134-2145	LDDDMMLDDDMM	12	Center of sample segment - EBCDIC	GHIT
2134-2139		6	Latitude (GEODETIC)	
2134	L	1	L = "N" = North = "S" = South	
2135-2137	DDD	3	DDD = Degrees-integral-right justified	
2138-2139	MM	2	MM = Minutes-integral-right justified	
2140-2145		6	Longitude (GEODETIC)	GHIT
2140	L	1	L = "E" = East = "W" = West	

ORIGINAL PAGE IS
OF POOR QUALITY

LIVES CCT HEADER FORMAT

BYTE	CONTENTS	NO. OF BYTES	DESCRIPTION	DATA SOURCE
2141-2143	DDD	3	DDD = Degrees-integral-right justified	
2144-2145	MM	2	MM = Minutes-integral-right justified	
2146-2149		4	Band sync status - Binary	SG
			The number of lines for which Sync could not be maintained during preprocessing by band.	
2146		1	Band 1	
2147		1	Band 2	
2148		1	Band 3	
2149		1	Band 4	
2150-2156		7	Zero fill.	
2157-2170	SUNØELDDØADDDØ	14	Sun Angle - EBCDIC	GHIT
			The Sun elevation angle and sun azimuth angle measured clockwise from true north at the time of RBV exposure or midpoint of MSS frame is specified to the nearest degree. Blank for ascending node coverage.	
2157-2162	SUNØEL	6	Sun elevation label	
2163-2164	DD	2	Sun elevation - integral degrees	
2165-2166	ØA	2	Sun azimuth label	
2167-2170	DDDØ	4	Sun azimuth - integral degrees	
2171-2178		8	Time and date of last update to controlling information for this sample segment - ERCDIC - YDDDHHMM	SG
2179-2642		464	Zero fill.	
2643-2940		298	General Annotation Byte assignments for the Production Film Converter.	
2643-2658		16	Bias and gain values for first four channels - binary.	

ORIGINAL PAGE IS
OF POOR QUALITY

LIVES CCT HEADER FORMAT

BYTE	CONTENTS	NO. OF BYTES	DESCRIPTION	DATA SOURCE
2643-2644		2	Bias for Channel 1.	
2645-2646		2	Gain for Channel 1.	
2647-2648		2	Bias for Channel 2.	
.		.	.	
.		.	.	
.		.	.	
2657-2658		2	Gain for Channel 4	
2659-2758	0	100	Zero fill	
2759	1	1	N Thousand scan lines per frame - Binary	SG.
2760-2789	HDTRS:LIVESØ...Ø	30	Job ID	SG
2790-2792	0	3	Altitude in meters - Binary	SG
2793-2794	0	2	Ground speed in m/sec - Binary	SG
2795	1	1	Scan type - Binary 0 = Raw data 1 = Smoothed data	SG
2796	0	1	Angle of arc in Deg - Binary	SG
2797	1		Camera - Binary 0 = 70 MM 1 = 5 Inch	SG
2798	0	1	Input Device - Binary 0 = 9 - track 1 = High Density Tape	SG
2799	2	1	Truncation 0 = 2 Low Order Bits 1 = 2 High Order Bits 2 = No Truncations	SG

LEC-12904

ORIGINAL PAGE IS
OF POOR QUALITY