BOEING

Solar Power Satellite System Definition Study

PHASE II
VOLUME III
OPERATIONS AND SYSTEMS SYNTHESIS
D180-25461-3

NASA CR-
160480

BOEING

GENERAL ELECTRIC

GRUMMAN

Arthur D Little, Inc.

TRW

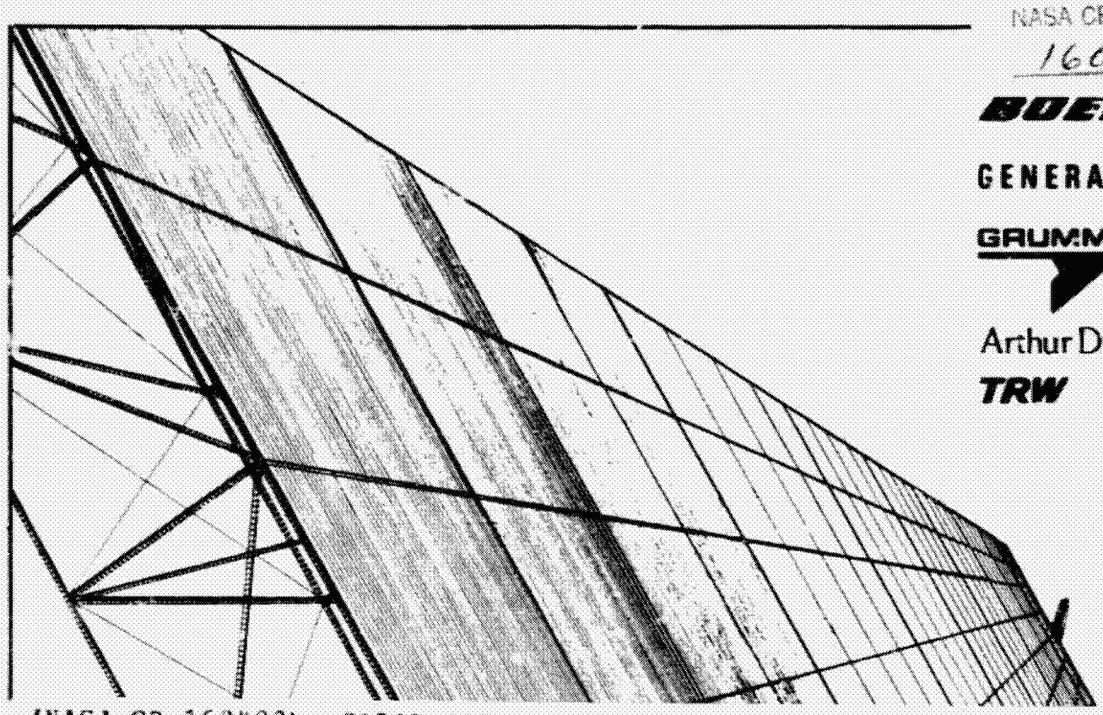

(NASA-CR-160480) SOLAR POWER SATELLITE SYSTEM DEFINITION STUDY. VOLUME 3: OPERATIONS AND SYSTEMS SYNTHESIS, PHASE 2 Final Report, Jan. - Nov. 1979 (Boeing Aerospace Co., Seattle, Wash.) 596 p G3/44 N80-19616 Unclas 47458

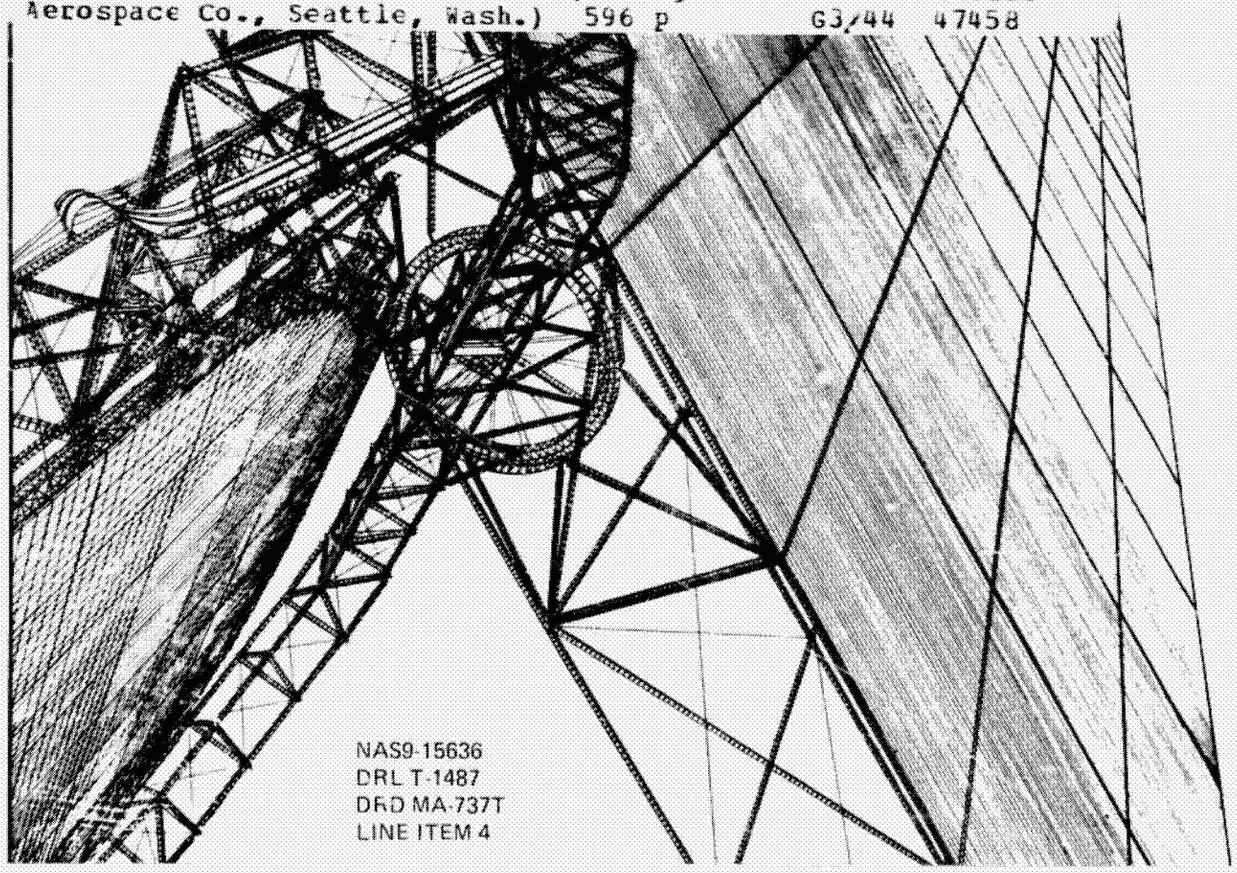

NAS9-15636
DRL T-1487
DRD MA-737T
LINE ITEM 4

SOLAR POWER SATELLITE
SYSTEM DEFINITION STUDY
Conducted for the NASA Johnson Space Center
Under Contract NAS9-15636

Volume III
PHASE II, FINAL REPORT
OPERATIONS AND SYSTEMS SYNTHESIS
D180-25461-3

Approved By: G. R. Woodcock
Study Manager

Boeing Aerospace Company
P.O. Box 3999
Seattle, Washington 98124

FOREWORD

The SPS System Definition Study was initiated in June of 1978. Phase I of this effort was completed in December of 1978 and was reported in seven volumes (Boeing document number D180-25037-1 through 7). Phase II of this study was started in January 1979 and was completed in November 1979. The Phase II study results are reported herewith. This study is a follow-on effort to an earlier study of the same title completed in March of 1978. These studies are a part of an overall SPS evaluation effort sponsored by the U.S. Department of Energy (DOE) and the National Aeronautics and Space Administration.

This study is being managed by the Lyndon B. Johnson Space Center. The Contracting Officer is Thomas Mancusco. The Contracting Officer's representative and Study Technical Manager is Harold Benson. The study is being conducted by The Boeing Company with Arthur D. Little, General Electric, Grumman, TRW, and Brown and Root as subcontractors. The study manager for Boeing is Gordon Woodcock. Subcontractor managers are Dr. Philip Chapman (ADL), Roman Andryczyk (GE), Ronald McCaffrey (Grumman), Ronald Crisman (TRW), and Don Hervey (Brown and Root).

This report includes a total of five volumes:

I - Executive Summary
II - Reference System Description
III - Operations and Systems Synthesis
IV - Technical Analysis Report
V - Phase II Final Briefing

Key team members that contributed in the various disciplines were the following:

Subject	JSC-Management Team	Contractor Team
Structures	Bob Reed	Rich Reinert A. Alberi (Grumman)
Power Distribution	R. Kennedy; M.E. Woods	J. Gewin
Power Transmission	R.H. Dietz	Dr. E. Nalos; Dr. G. White
RF-DC Conversion	L. Leopold	Dr. E. Nalos
Phase Control	J. Seyl	W. Lund
Fiber Optic Phase Distribution	J. Seyl	G.E. Miller; Tom Lindsay
Solid State Design	L. Leopold	G.W. Fitzsimmons B.R. Sperber
Array Analysis	Dr. D. Arndt	S. Rathjen
Information & Communications	R.H. Dietz, J. Kelley	Tom Walter (TRW)
Space Construction Operations	L. Jenkins	K. Miller R. McCaffrey et al (Grumman)
Space Transportation	H. Davis E. Crum	Eldon Davis
Ground Receiving Station		R. Andryczyk (GE)
Siting	H. Roberts	D. Gregory
Power Collection	R.H. Dietz	P. Foldes (GE)
Grid Interface	L. Monford	B. Kaupang (GE)
Constuction	H. Roberts	J. Chestik (GE)
Mission Ops & Control	B. Wolfer	E. Davis K. Miller R. Crisman (TRW)
Industrial Infrastructure	J. Poradek	P. Chapman (A.D. Little)
Launch and Recovery Site	E. Crum	J. Jenkins K. Miller D. Hervey (Brown and Root)

TABLE OF CONTENTS

		PAGE
SECTION 1	INTRODUCTION	1-1
SECTION 2	SOLAR POWER SATELLITE PROGRAM INTEGRATED OPERATIONS	2-1
SECTION 3	THE INDUSTRIAL IMPACT OF THE SPS	3-1
SECTION 4	TERRESTERAL TRANSPORTATION ISSUES	4-1
SECTION 5	CARGO PACKAGING	5-1
SECTION 6	LAUCH AND RECOVERY SITE FACILITIES AND OPERATIONS	6-1
SECTION 7	PERSONNEL TRANSPORTATION OPERATIONS	7-1
SECTION 8	EARTH-TO-LEO CARGO TRANSPORTATION OPERATIONS	8-1
SECTION 9	LEO BASE OPERATIONS	9-1
SECTION 10	LEO-TO-GEO CARGO TRANSPORTATION OPERATIONS	10-1
SECTION 11	SPACE VEHICLE IN-SPACE MAINTENANCE	11-1
SECTION 12	GEO BASE OPERATIONS	12-1
SECTION 13	SPS MAINTENANCE OPERATIONS	13-1
SECTION 14	SPS/UTILITY GRID OPERATIONS	14-1
SECTION 15	OPERATIONS CONTROL CONCEPT	15-1
SECTION 16	RECTENNA CONSTRUCTION	16-1

SECTION I

INTRODUCTION

This document contains the results of the operations analyses that were conducted during Phase II of this contract. Some of these analyses examined operations that have never been studied before, e.g., space vehicle in-space maintenance. Many of the analyses explored in greater depth some operations that were lightly treated during previous studies, e.g., LEO Base cargo handling operations. Other analyses were of operations that have been detailed previously but were now obsolete, e.g., personnel transportation operations and cargo packaging.

The primary objectives of these operations analyses were to define the operational requirements for all of the SPS system elements so that 1) equipment and facilities could be synthesized, and 2) to make estimates of the manpower requirements.

An overall, integrated, end-to-end description of the SPS operations is presented first in Section 2. (This integrated description is written in such a way that it can be extracted as a standalone document.) The detailed operations analyses, upon which this integrated description was based, are found in the remaining sections of this book. For most of the operations analyses, the 12th year of commercial operation, see Figure 1-1, was used as the basis for generating the requirements.

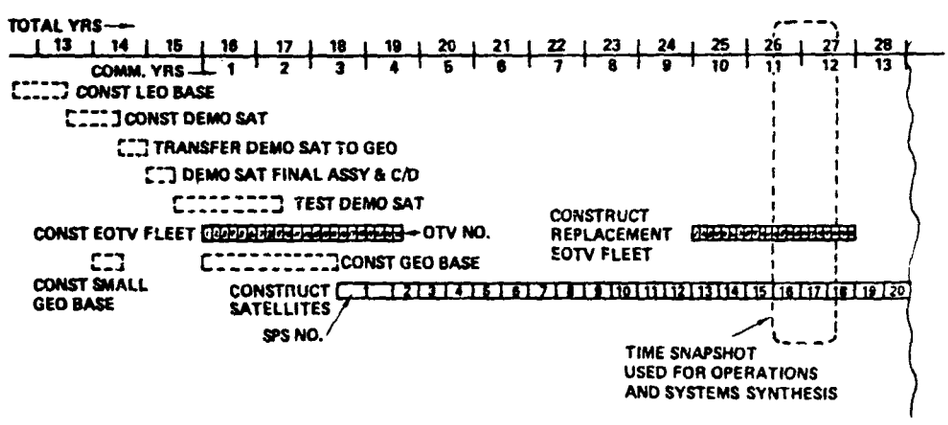

Figure 1-1. SPS Demonstration and Commercialization Schedule

SECTION 2

SOLAR POWER SATELLITE PROGRAM INTEGRATED OPERATIONS

		Page
1.0	Introduction	2-1
2.0	Industrial Complex and Surface Transportation Operations	2-4
3.0	Rectenna Construction Operations	2-7
4.0	Launch and Recovery Site Operations	2-9
5.0	LEO Base Operations	2-11
6.0	GEO Base Operations	2-13
7.0	SPS Maintenance Operations	2-21
8.0	SPS/Rectenna/Utility Grid Operations	2-23
9.0	Operations Control	9-25
10.0	Summary	9-27

SECTION 2

SOLAR POWER SATELLITE PROGRAM INTEGRATED OPERATIONS

1.0 INTRODUCTION

The overall scope of the Solar Power Satellite program operations is depicted in Figure 1. These operations involve many surface as well as in-space operations. In this discussion, we will take a look at these operations using the 12th year of commercial operations as a model. During this time period the primary end products of SPS industrial enterprise are the following: 1) operation and maintenance of 20 satellites, 2) completion of a new SPS and its ground receiving antenna every 6 months, and 3) construction of electric cargo orbital transfer vehicles (EOTV's) at the rate of one vehicle every 45 days. EOTV's are not constructed every year of SPS operations; we have selected a year including EOTV construction for completeness.

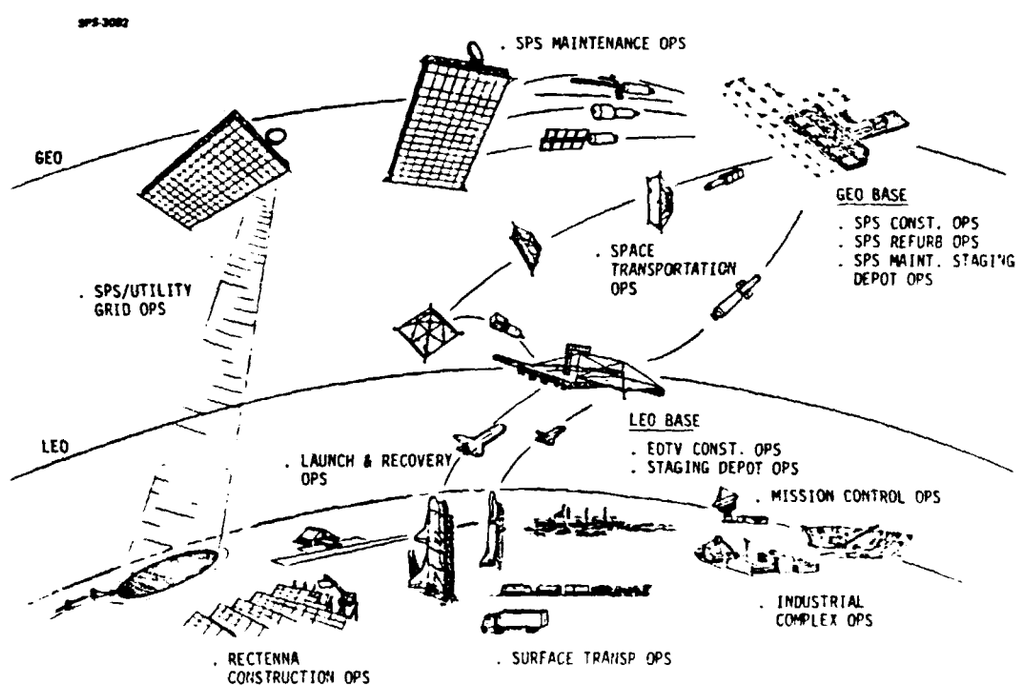

Figure 1 – Integrated SPS Program Operations

Let's take a quick look at the operations being conducted on a typical day during this twelfth year.

Raw materials will be extracted from the Earth and delivered to processing plants where aluminum, steel, graphite, and other primary products will be produced. These materials are delivered to manufacturing plants where satellite and rectenna components are fabricated and space vehicle propellants are produced.

The rectenna components, concrete, electrical apparatus, and etc., are delivered to rectenna construction sites (there will be four rectennas under various stages of construction at any time).

Satellite components and propellants are delivered to the launch site. Heavy lift launch vehicles are loaded with 1 million pound payloads. There will be 1 or 2 launches each day. Space crews are launched by a dedicated vehicle. The cargo and crews are delivered to a low Earth orbit base (the LEO Base shown in Figure 2). Some of the cargo and crew remain at this base where electric orbital transfer vehicles (EOTV's) will be constructed. The majority of cargo is transferred to the EOTV's which will deliver the cargo to the geosynchronous Earth orbit base (the GEO Base). Crews will be delivered to GEO by dedicated vehicles.

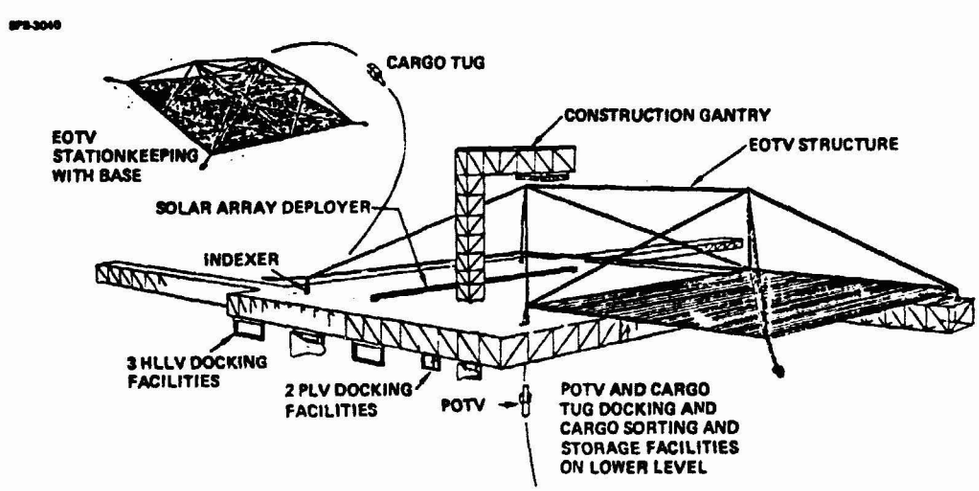

Figure 2 – LEO Base

REPRODUCIBILITY OF THE ORIGINAL PAGE IS POOR

At the Geo Base, see Figure 3, the Solar Power Satellites are being constructed. There is also satellite component refurbishment operations at this base. These components have been removed from operational satellites by a mobile maintenance crew that visits each satellite twice a year.

Each of the operational satellites are beaming power back to its rectenna site where the microwave energy is converted to electrical energy which is then delivered to the utility power grid.

All of these operations are coordinated and controlled by operations control people and facilities, and systems.

Now that we have taken a quick look at the integrated SPS program operations, let's take a closer look at each of the elemental operations.

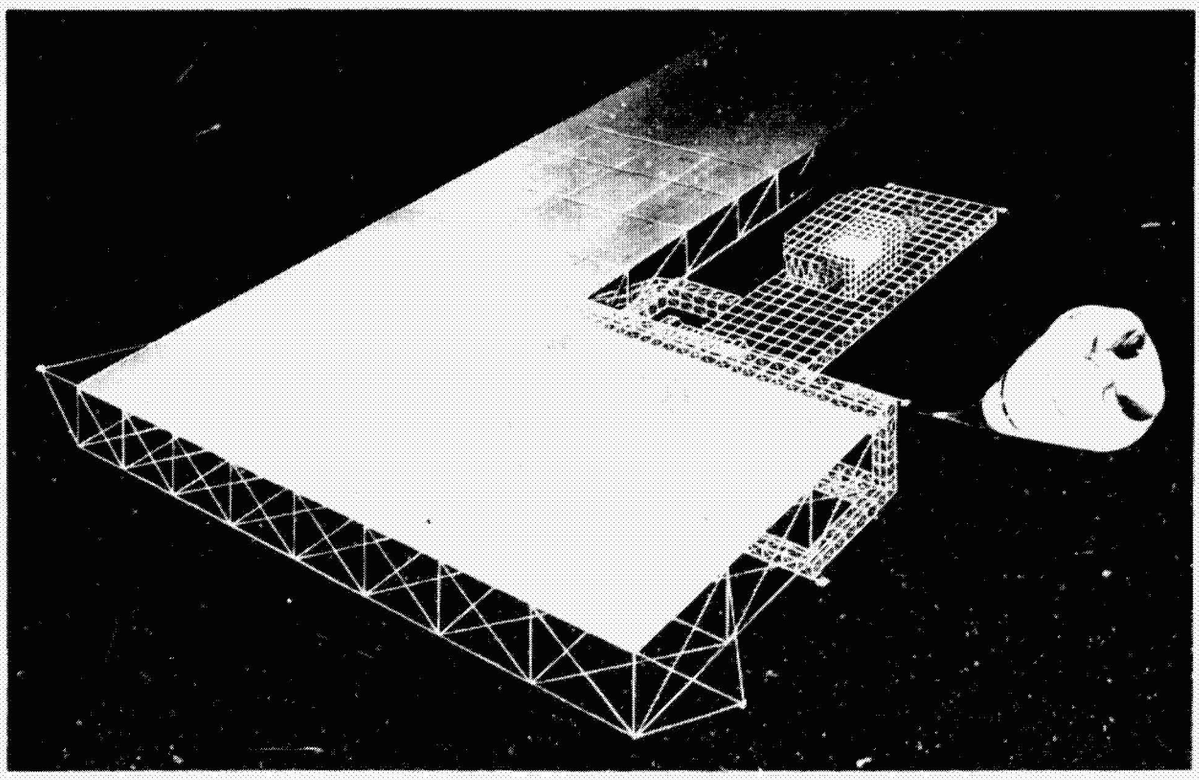

Figure 3 – GEO Base

2.0 INDUSTRIAL COMPLEX OPERATIONS

During the 12th year of commercial SPS operations, the industrial infrastructure will be producing the materials and components required to construct 2 satellites, 2 rectennas and 8 EOTV's. Figures 4 and 5 illustrate some of the manufacturing plants and the quantity of goods to be produced to support the space construction and ground receiving station construction operations. Studies have shown that the production of photovoltaic cells and blankets will be the most significant new industrial enterprise. Certain other subsystems will require the development of significant new industrial capacity, but the SPS demand seems reasonably comparable with projected capacity to serve other markets.

Despite the large size of many of the major satellite elements, most of the components can be shipped via truck or rail. The notable exceptions will be antenna subarrays (11 x 11 meters) and electrical rotary joints assemblies (16m diameter x 12m long) which can be shipped only via barge or ship.
If we consider only the SPS and EOTV structural components, solar arrays, and power bus materials to be delivered to the launch site each month (a total of approximately 7400 metric tons per month), the equivalent of only 130 rail cars would be required. The rectenna construction will require about 800,000 metric tons per month of concrete, steel, aluminum, ceramics, plastic, etc. This will require the equivalent of approximately 14,000 rail cars per month. The space transportation vehicle propellant production will require approximately 760,000 metric tons per month of coal and liquid H_2 to be transported. This is the equivalent of 13,500 rail cars per month. When the above requirements are added together the result is that the SPS program will require the equivalent of about 30,000 rail cars per month to support all operations. This is only 1.6% of the 1.9 million rail cars per month moved in the U.S. in 1978. Of course these goods would be delivered by ships, trucks, and pipelines in addition to rail cars.

It is estimated that over 500,000 people will be involved in the SPS industrial complex and surface transportation operations, that will stretch from coast-to-coast. With the exception of the coal and rectenna materials, all of the manufactured goods and propellants will be directed toward the launch and recovery site.

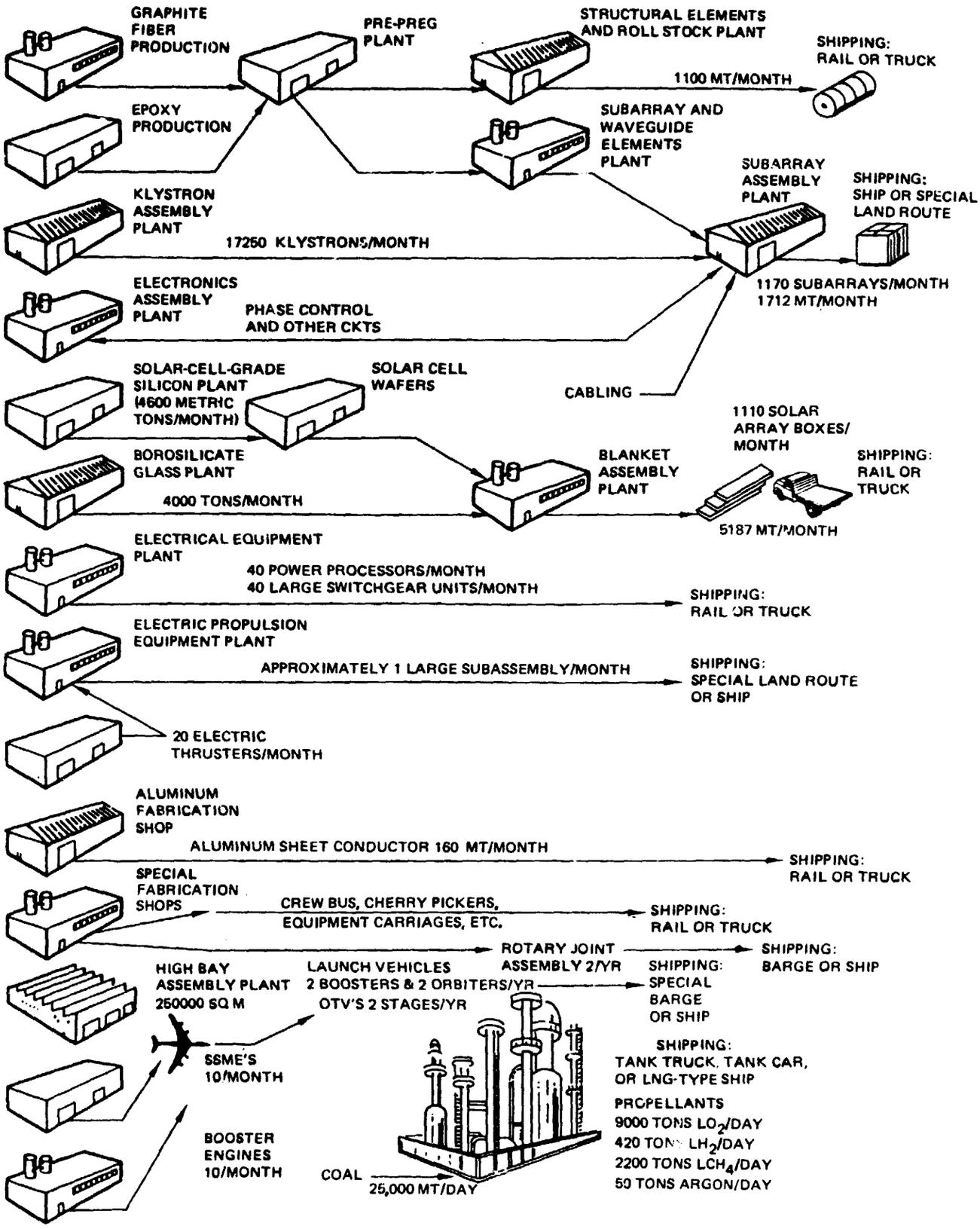

Figure 4 – Manufacturing Flow Concept for SPS Space Hardware

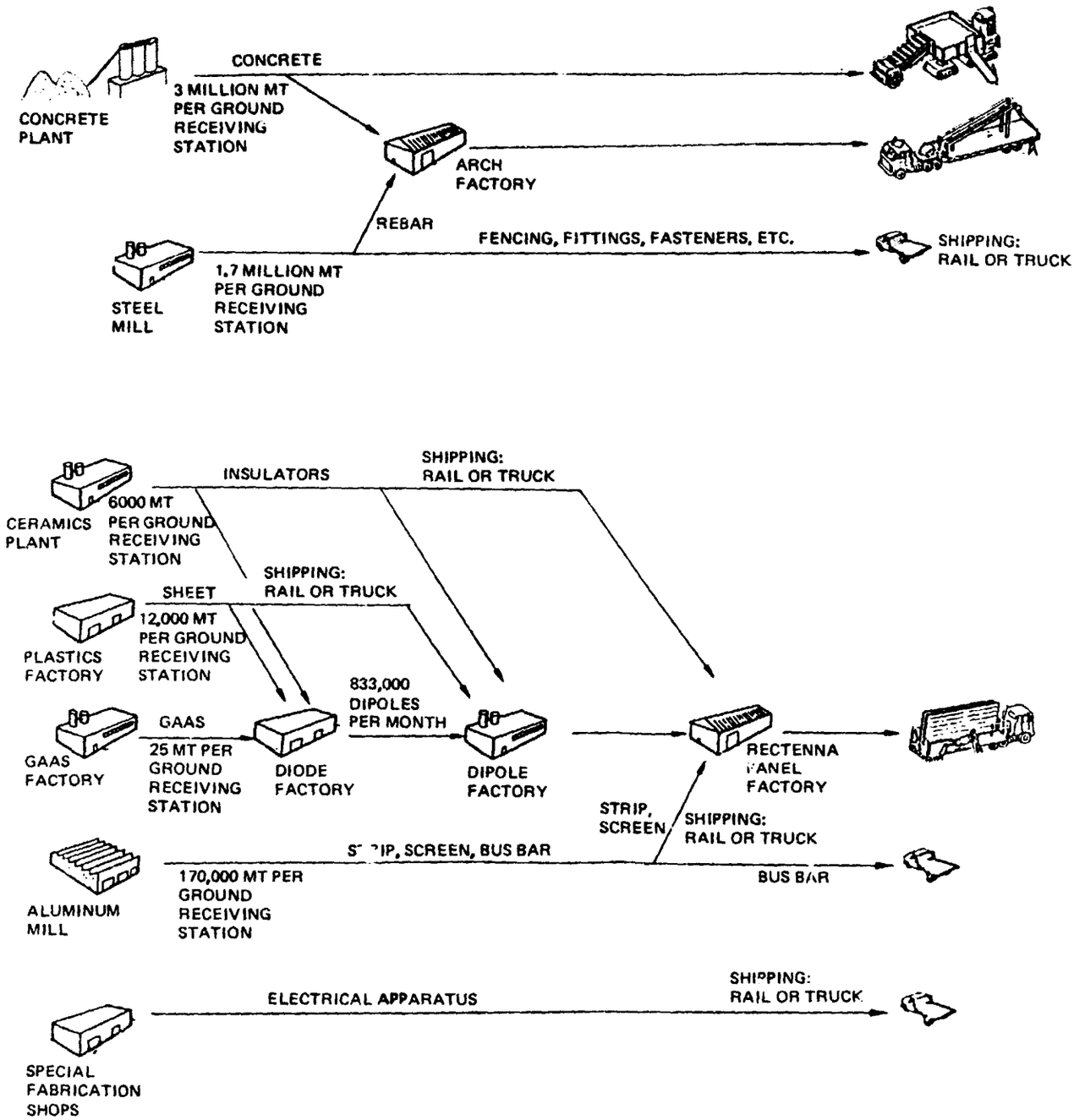

Figure 5 – Manufacturing Flow for Ground Receiving Station Hardware

REPRODUCIBILITY OF THE
ORIGINAL PAGE IS POOR

3.0 RECTENNA CONSTRUCTION OPERATIONS

Each ground receiving station, see Figure 6, includes the land area, rectenna, utility interface equipment, and control and communciations systems. The land sites are 13.2 x 18.7 km (nominal at 35° latitude) and each rectenna is 9.9 x 14 km. Each ground receiving station would be constructed over a 24 month period. Four of these sites would be in work simultaneously so that the receiving stations are brought on-line at the rate of one every 6 months (the same as the SPS construction rate).

First, the site is cleared, access roads established, and surveying crews perform a detailed site survey to precisely locate all of the rectenna panel support structures. The site is then fenced.

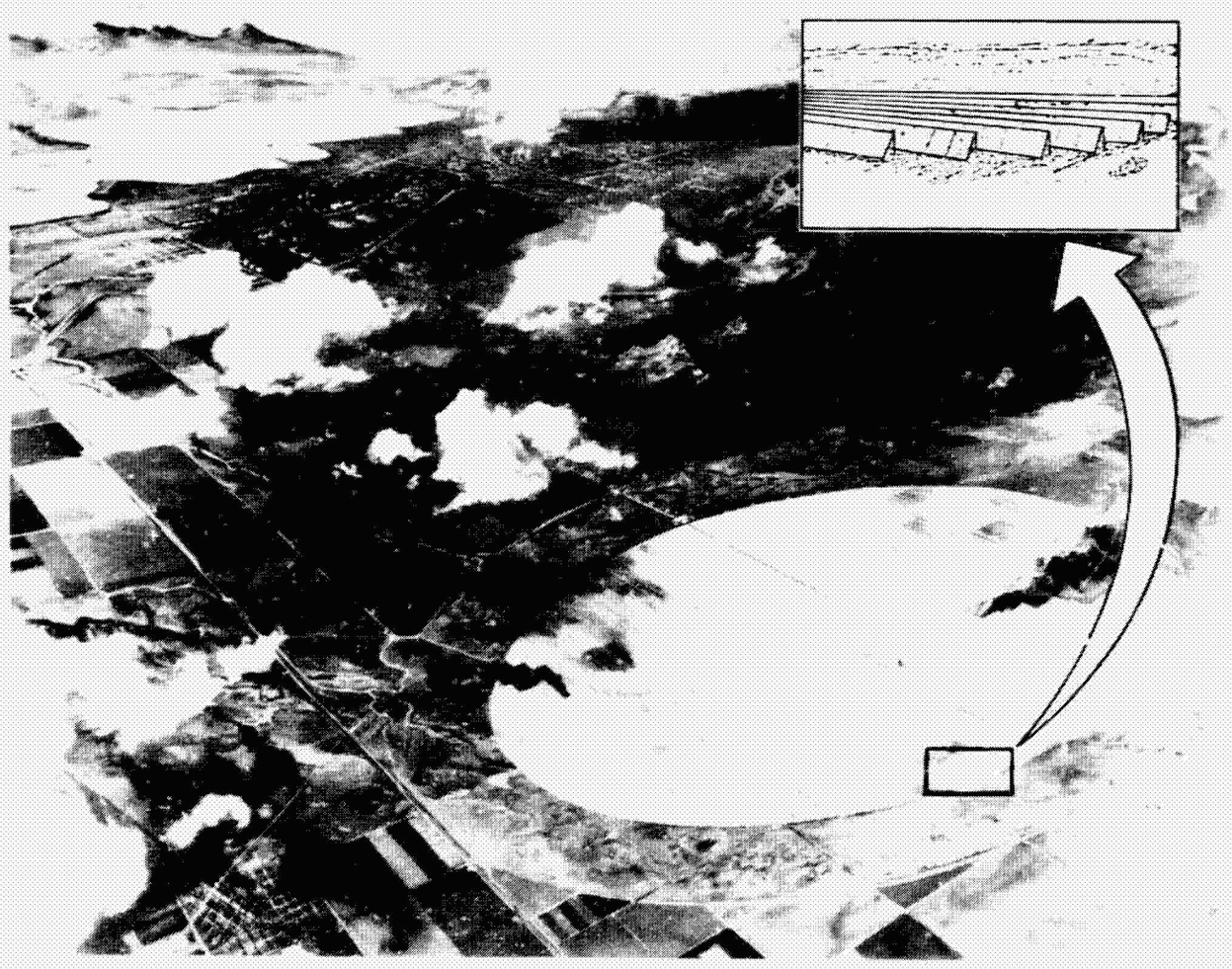

Figure 6 – Ground Receiving Station

While the preliminary site preparation work is conducted, a portable, automated structural support arch casting factory is brought on-site. The arches will be produced at the rate of 250 arches per hour. The rectenna panels are produced at a central panel factory and these panels are delivered to the construction site.

Figure 7 illustrates the types of construction equipment used to erect the rectenna. Automated augers bore footing holes. An automated footing machine pours the concrete footings and sleeves. The precast arches are trucked into a position whence they can be offloaded by a crane and installed into the footings. Other cranes install the rectenna panels and power busses.

It is estimated that a total of 12,600 man-months will be required to construct each rectenna over a 24 month period (average of 525 workers per month). This includes the people working in the arch factory and panel factory. With four sites in work simultaneously, this translates to 2100 workers.

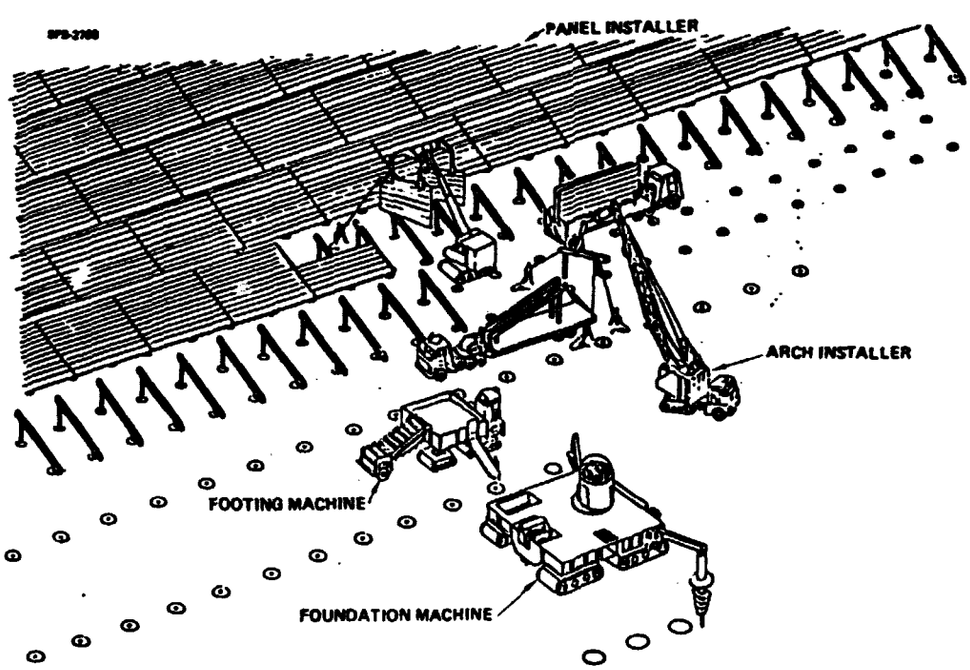

Figure 7 — Rectenna Construction Equipment

4.0 LAUNCH AND RECOVERY SITE OPERATIONS

The Kennedy Space Center (KSC) is the reference location for the SPS System Launch and Recovery Site. Figure 8 illustrates the operations flow concept for the launch complex. The heavy lift cargo launch vehicles (HLLV's) and the personnel launch vehicle (PLV's) boosters and orbiters land at the landing strip. The HLLV Boosters and Orbiters and the PLV Boosters are towed from the landing strip directly to their processing facilities. The PLV Orbiter is towed from the landing area to a Passenger Offloading Facility where the passengers are disembarked. The vehicle is then towed to its processing facility.

The HLLV Orbiters are taken to the HLLV Orbiter and Payload Processing Facility where the Orbiter is maintained and the cargo pallets are loaded in a 70 hour turnaround time. Cargo is delivered to KSC via ship, rail, and truck.

The HLLV Boosters are taken to the HLLV Booster Processing Facility where the booster vehicle is maintained. The boosters are turned around in 58 hours.

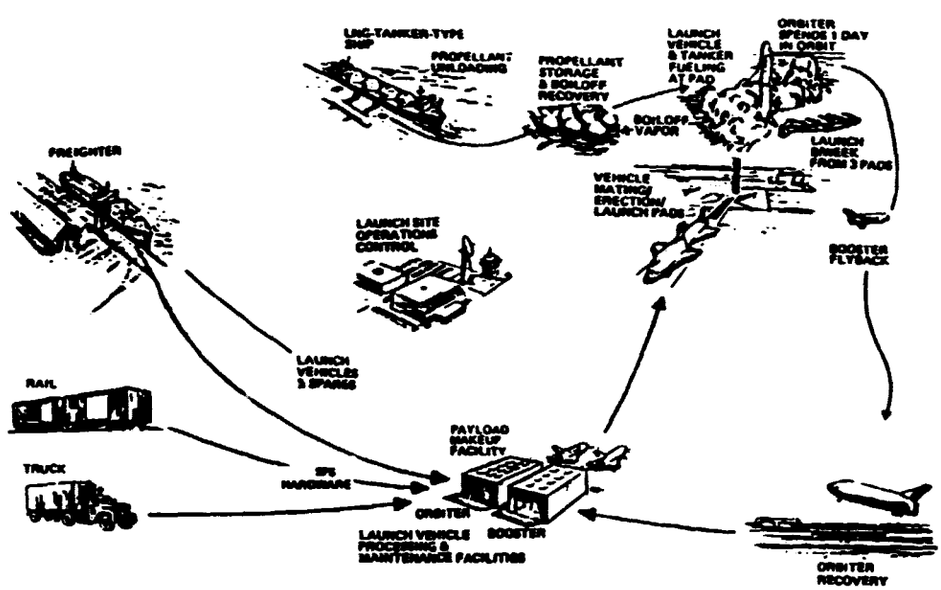

Figure 8 – Operations Flow Concept for Launch Complex

The HLLV Boosters and Orbiters are towed to one of 3 HLLV launch pads where the stages are mated horizontally and then erected for launch as shown in Figure 9. Figure 10 shows an HLLV launch. The launch pad operations take 34 hours. There will be approximately 400 HLLV launches per year.

The personnel launch vehicles will be processed in a similar fashion.

Propellants will be delivered by ship or barge to the launch site. These propellants are stored, conditioned, and delivered by pipelines to the launch pads. Propellants destined for in-space vehicles will be pumped into propellant delivery vehicles at the launch pads.

Table 1 summarizes the facilities and manpower requirements for the launch and recovery site.

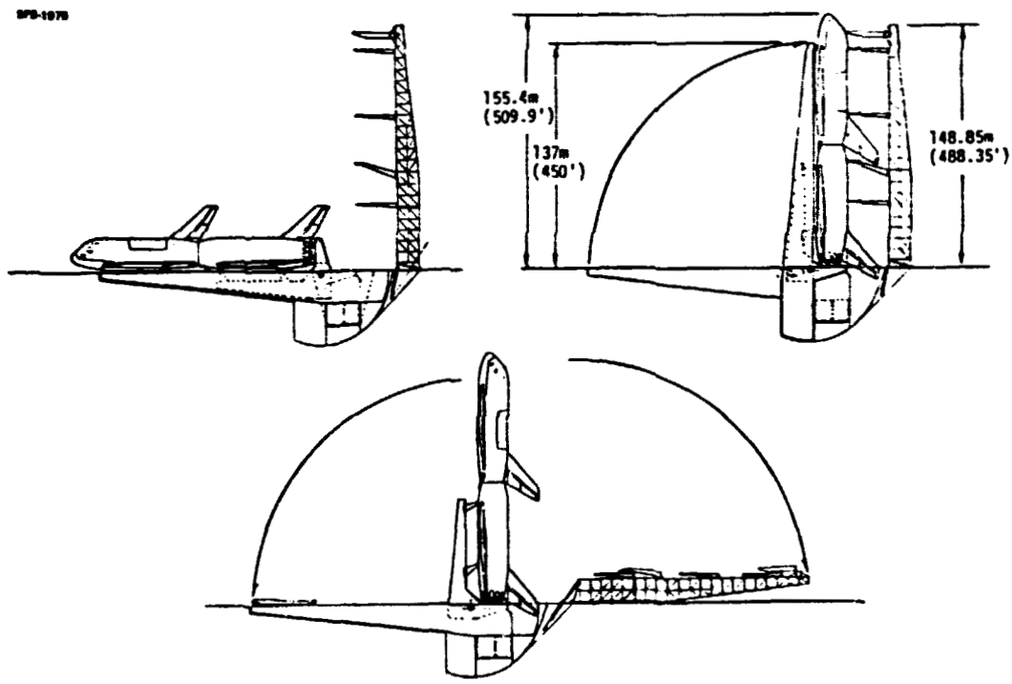

Figure 9 — HLLV Launcher/Erector Concept

REPRODUCIBILITY OF THE
ORIGINAL PAGE IS POOR

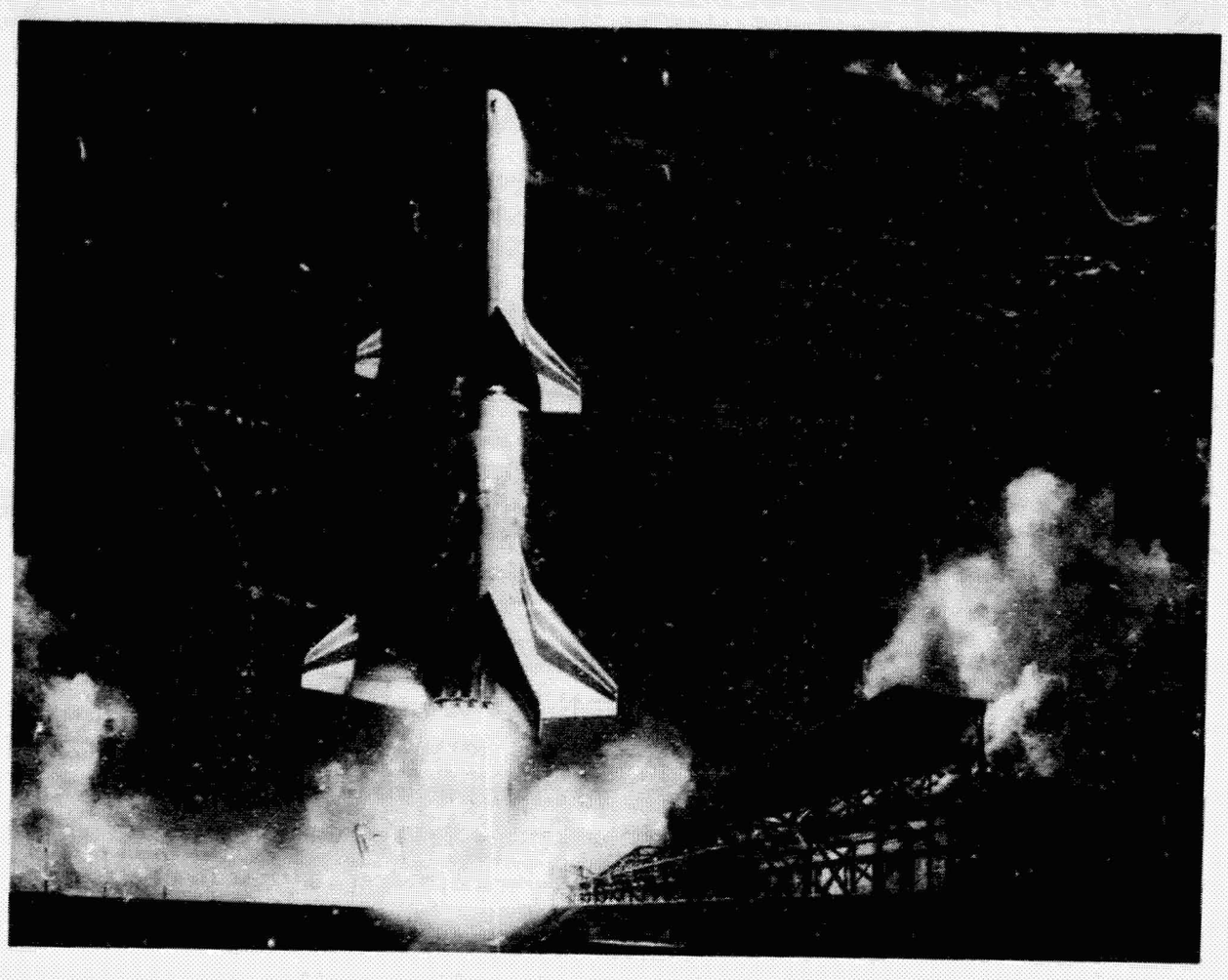

Figure 10 – HLLV at Liftoff

5.0 LEO BASE OPERATIONS

The LEO Base was shown in Figure 2. It has two major operational functions: 1) It is used to construct the electric orbital transfer vehicles (EOTV's), and 2) it is used as a staging base for both cargo and personnel going between the Earth and the GEO base. Besides these functions there are the operations associated with the base attitude control, power supply systems control, crew habitat, housekeeping, etc.

The EOTV construction operations are conducted intermittently during the SPS construction program. An initial fleet of 23 EOTV's is constructed during the first 4 years of commercial operations. The EOTV construction operations are then

terminated until year 10 when a replacement EOTV fleet will be constructed at the rate of 8 units per year (1 EOTV every 45 days). A construction crew of 35 people are required. These workers operate beam machines, cherrypickers, bus deployers, etc. from pressurized control cabins on the mobile construction equipment items.

Depot operations are conducted continuously throughout the life of the SPS program. Both SPS construction and maintenance crews and materials going to and from the GEO base are transferred through the LEO Base. Figure 11 shows that 2 to 5 vehicles are handled each day. Figure 12 shows a cargo pallet being offloaded from a HLLV. Some of these pallets are emptied at the LEO base. Others are transferred to EOTV's, which are station keeping about 2 kilometers away from the base, using cargo tugs. The GEO crews are taken to a personnel orbital transfer vehicle (POTV). Crew supplies modules are attached to the POTV's for delivery to the GEO Base. A crew of 84 people are required for these depot operations.

In addition, ongoing operations are needed for habitation operations (housekeeping, food service, etc.), base subsystem operations (electrical power, flight control, computers, etc.), base maintenance operations, crew training operations, and health/safety operations. A crew of 102 people are required for these functions.

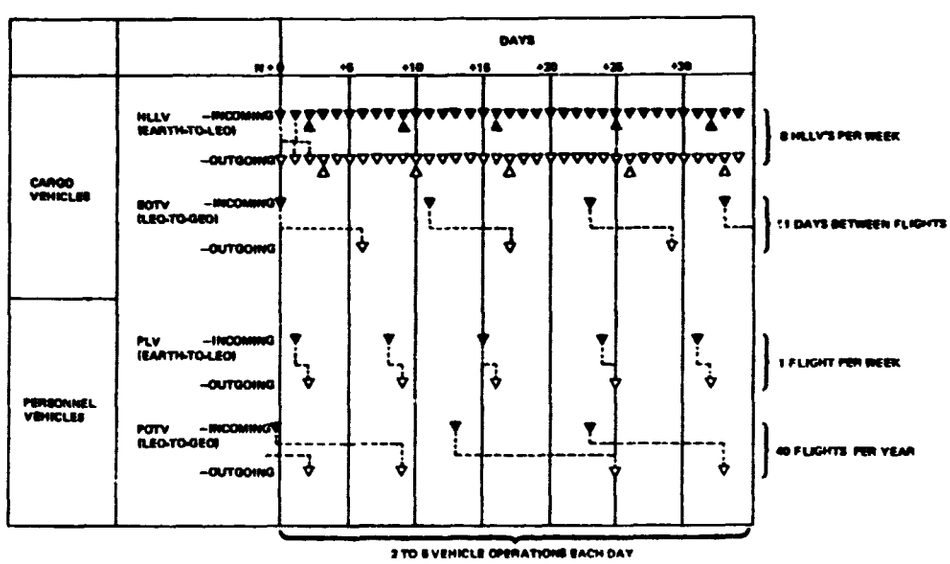

Figure 11 — LEO Base Space Vehicle Traffic Schedule

REPRODUCIBILITY OF THE
ORIGINAL PAGE IS POOR

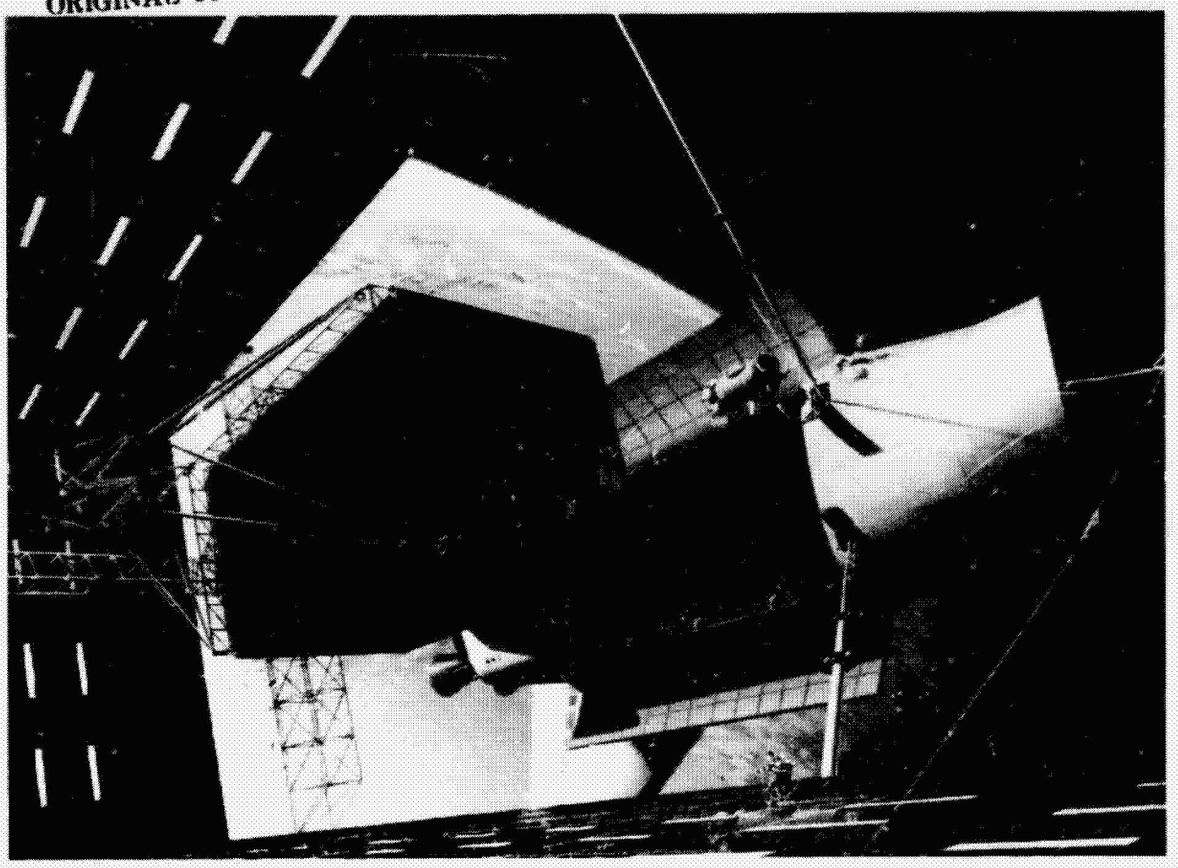

Figure 12 – Cargo Pallet Being Offloaded from an HLLV at the LEO Base

Figure 13 shows the crew organization for the total LEO base crew size of 229 people. These crewmembers work 10 hour shifts, 6 days each week, and are in orbit for 90 days each tour of duty. A replacement crew of 229 people are on Earth taking leave, being trained, etc. during their 90 days between tours of duty.

6.0 GEO BASE OPERATIONS

The GEO base was shown in Figure 3. This base is used for two main functions: 1) it is used to construct the solar power satellites, and 2) it is used to support the SPS maintenance operations. In addition to these functions, there are also operations associated with base attitude control, power supply system control, crew habital housekeeping, etc.

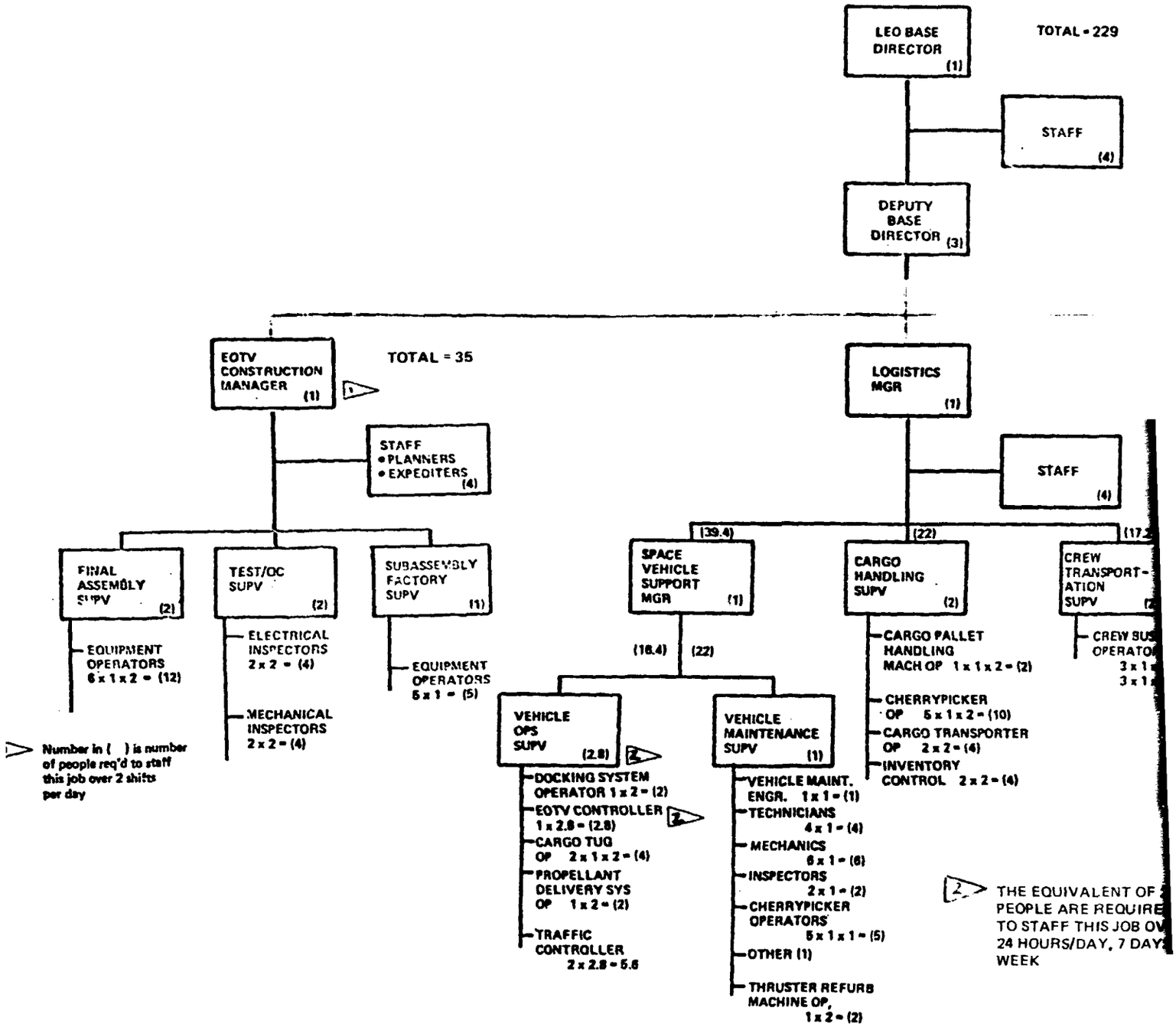

[redacted] FRAME

PRECEDING PAGE BLANK NOT FILMED

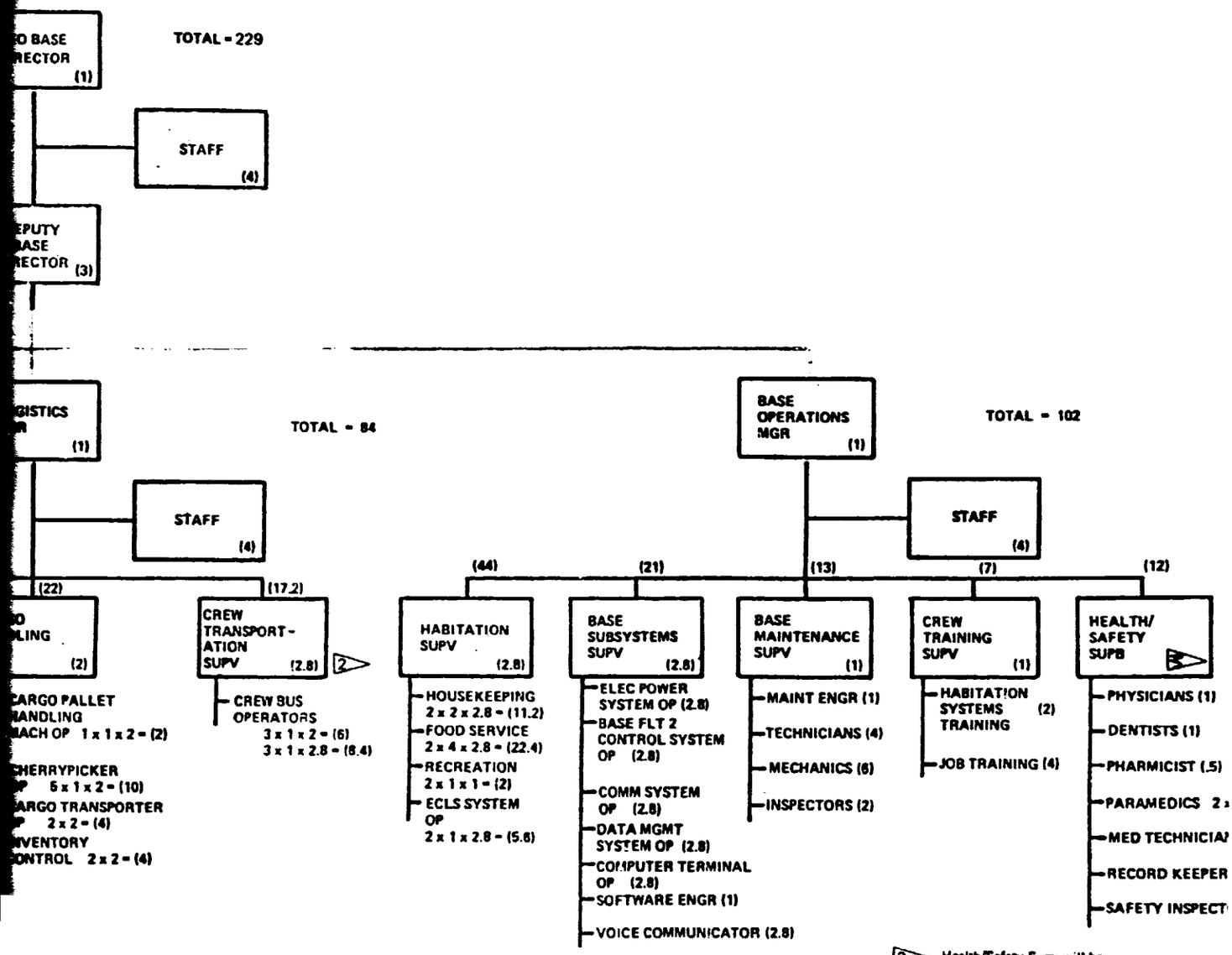

FOLDOUT FRAME 2

Figure 13 – LEO Base Crew Size and Organization

REPRODUCIBILITY OF THE
ORIGINAL PAGE IS POOR

The SPS construction operations are conducted at a rate to produce a new satellite every 6 months. The solar array portion of the satellite and the antenna are constructed simultaneously in the two main construction areas on the base. There will be approximately 260 spaceworkers involved in the construction operations. They operate construction equipment from pressurized control cabins on the machines, see Figure 14.

In addition, ongoing operations are needed for flight vehicle support operations, habitation operations (housekeeping, food service, etc.), base subsystem operations (electrical power, flight control, computers, etc.), base maintenance operations, crew training, and health/safety operations. A crew of about 185 people are required for these functions.

Figure 15 shows the crew organization for the GEO base crew size of 444 people. These crewmembers work 10 hours shifts, 6 days each week, and are in orbit for 90 days each tour of duty. A replacement crew of 444 people are on Earth taking leave, being retrained, etc., between tours of duty.

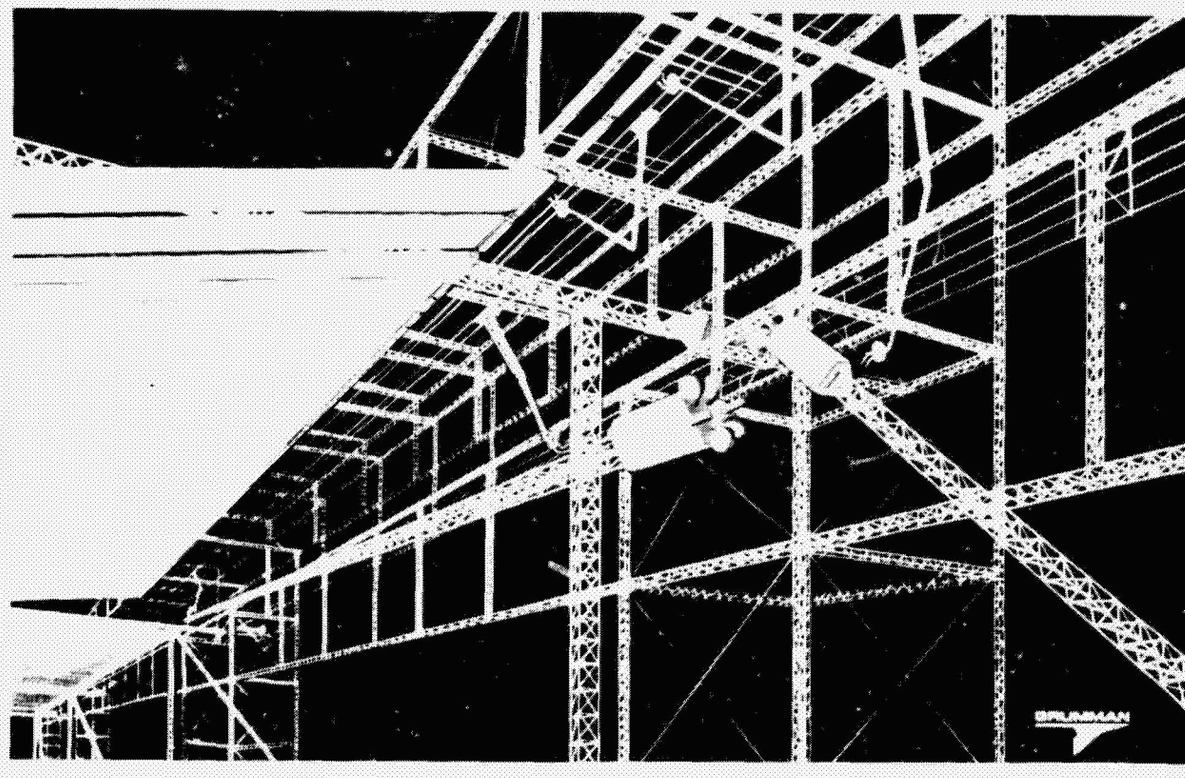

Figure 14 — SPS Assembly Operations

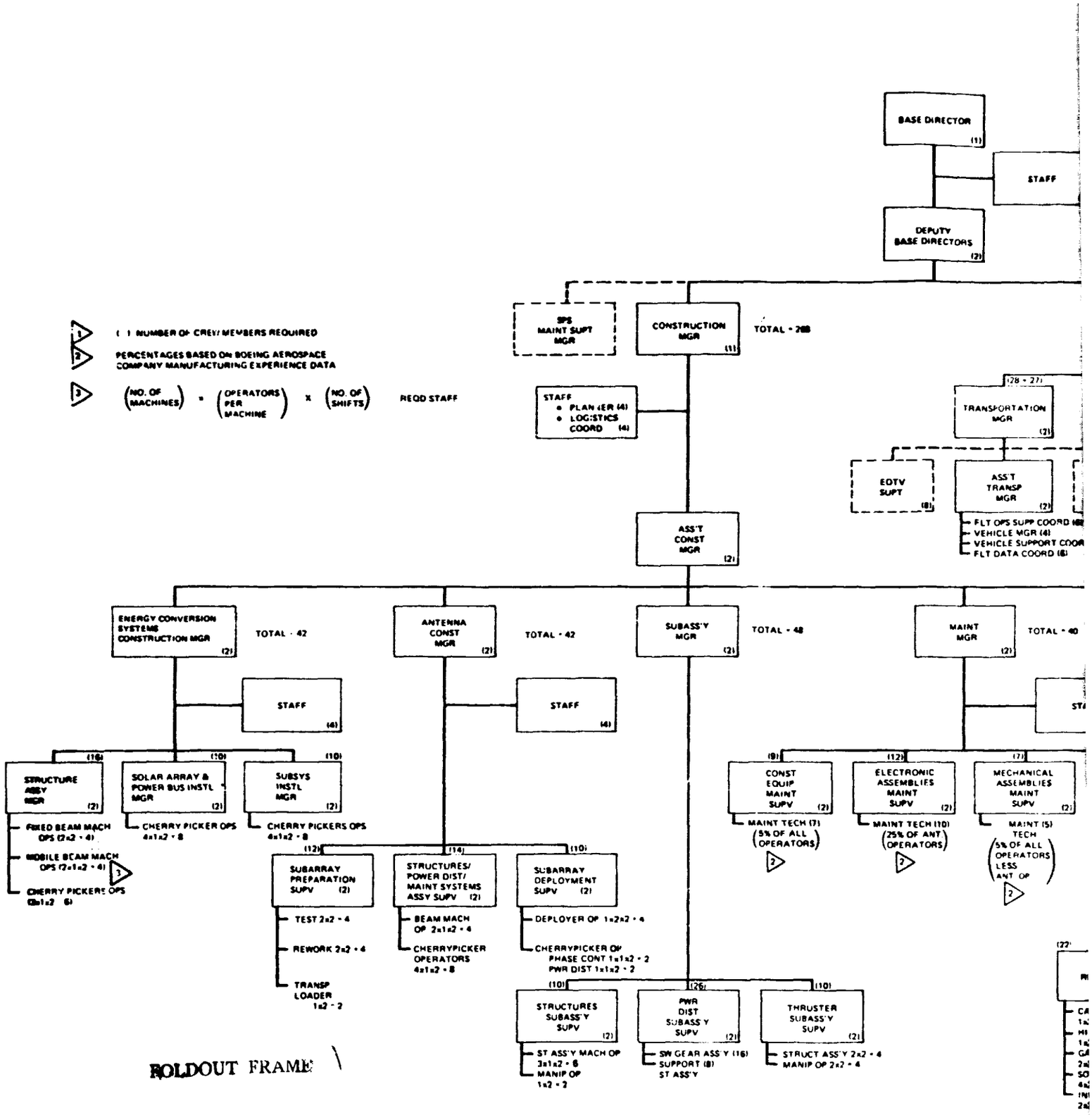

FOLDOUT FRAME

PRECEDING PAGE BLANK NOT FILMED

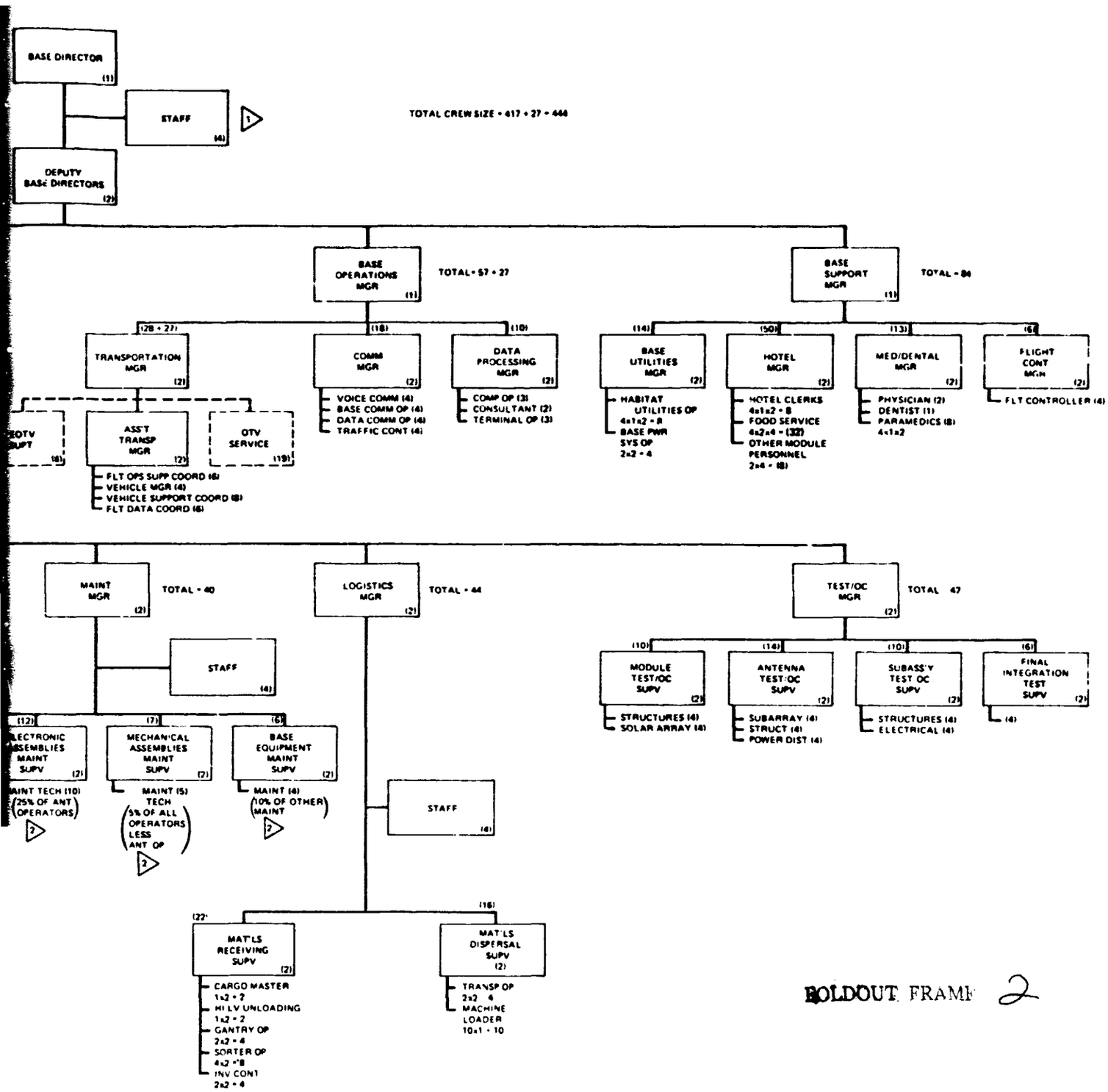

FOLDOUT FRAME 2

Figure 15. GEO Base Organization and Crew Jobs

7.0 SATELLITE MAINTENANCE OPERATIONS

The satellite maintenance operations include two primary sub-operations: 1) The maintenance that is performed at the satellites, and 2) The refurbishment of defective satellite components at a maintenance depot on the GEO Base. Figure 16 illustrates the integrated maintenance operations and Figure 17 shows the associated timeline.

A crew of 83 mobile maintenance workers, see Figure 18, are delivered to the GEO Base twice a year. These crewmembers board a mobile crew habitat and are then delivered to an operational satellite along with some maintenance equipment and some replacement parts. The satellite is shut down prior to the crew's arrival. The mobile habitat, maintenance equipment, and pallets of components, dock to the satellites antenna. The crew is distributed to some built-in maintenance cherrypickers along with replacement parts. Over a 3 1/2 day period, defective components are removed and replaced with new ones. The defective components are returned to the GEO Base. The crew, mobile maintenance equipment, and replacement parts move on to the next satellite. They repeat these maintenance operations as they visit 20 satellites over a 90 day period. The crew and equipment are returned to the GEO Base at the end of their tour and the crew is returned to Earth.

At the GEO Base, the defective components are delivered to maintenance modules. These parts are individually tested to diagnose their fault conditions and then they are sent through a production line where they are torn down to the extent required to replace the defective components. The components are then reassembled and tested. They are then returned to storage for eventual delivery to the satellites for reuse.

A crew of about 300 people are required for these refurbushment operations when 20 satellites are operational. This quantity will vary with the number of satellites to be serviced.

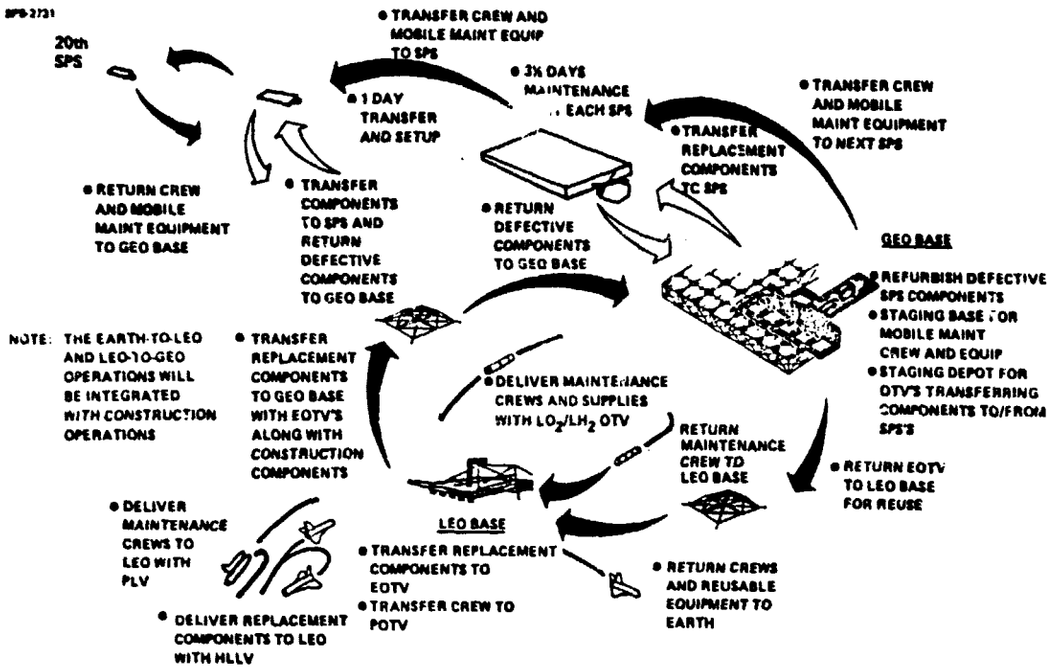

Figure 16 – SPS Maintenance Operations

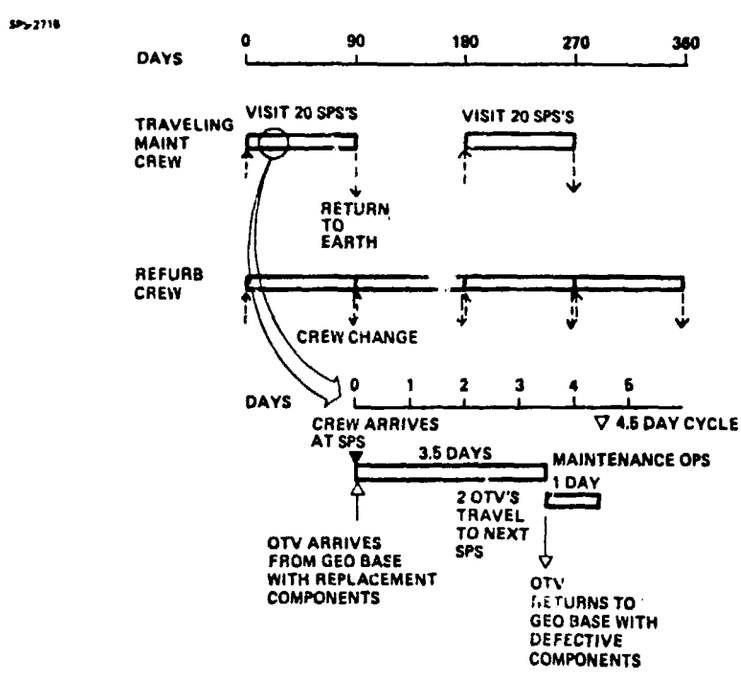

Figure 17 – SPS Maintenance Timeline

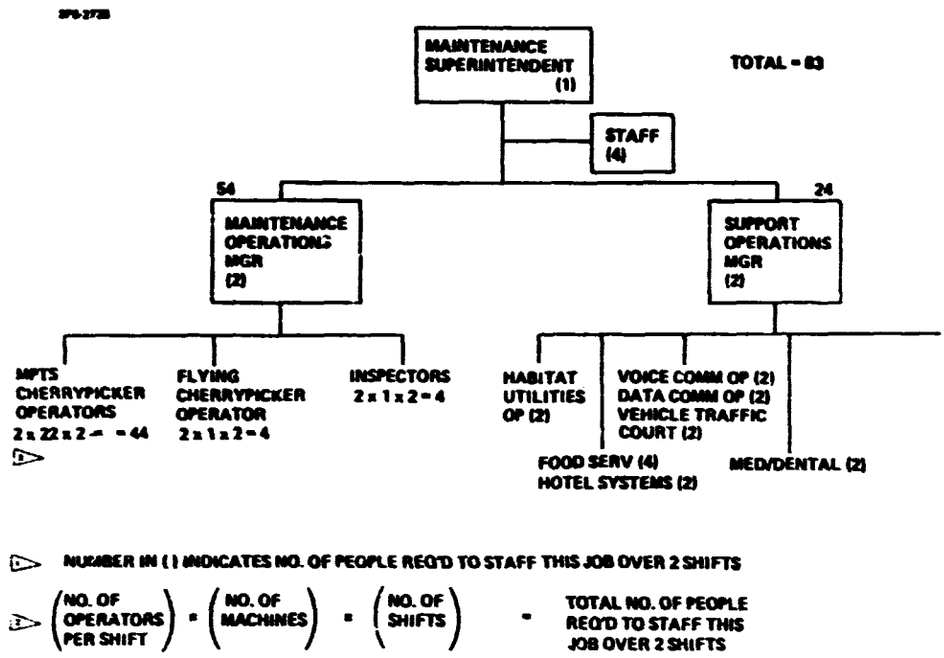

Figure 18 – Mobile Maintenance Crew Organization and Crew Size

8.0 SPS/RECTENNA/UTILITY GRID OPERATIONS

For purposes of illustration only, it is assumed that each SPS/ground receiving station pair will be operated by a utility power pool such as the Northwest Power Pool. As part of a utility system, the SPS elements become an integral part of that system and are affected by conditions on the system and the constraints imposed by the system.

Conventional generating plants in a utility network are operated under the direction of a company dispatcher who, in most instances, is provided direction from a power pool operating control center, as shown in Figure 19. However, as the SPS ground receiving stations will represent a significant block of generation in any power pool, each of them will be controlled by its own Rectenna Control Center. The Rectenna Control Center will be capable of controlling the SPS power output from 50 to 100% of maximum power and will also have emergency satellite power shutdown control. These control centers will receive direction from the power pool operating control center.

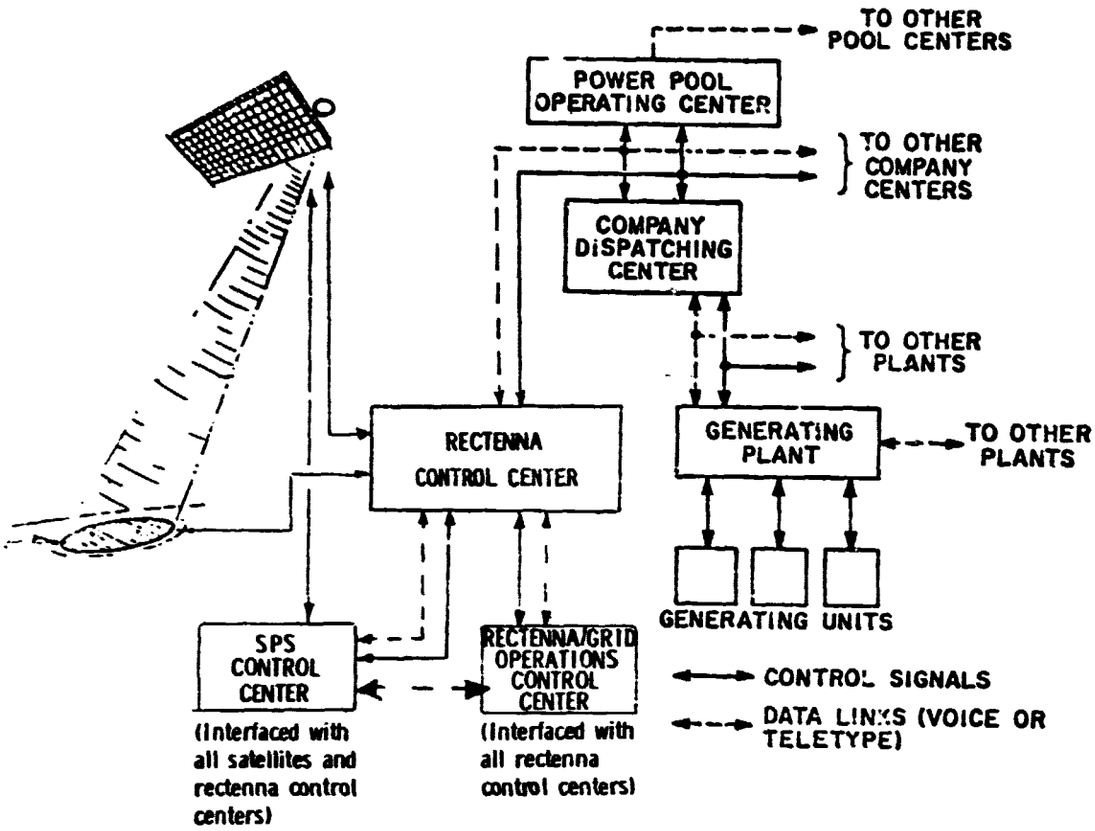

Figure 19 – SPS/Rectenna/Utility Grid Control Structure

Telemetering of power levels and voltages will provide the pool operators a current picture of conditions on the network. As loads and power flows change, conventional generation units will be brought on line or dropped off line to maintain system frequency. The SPS unit will be used to maintain the base load.

Each ground receiving station will employ about 225 maintenance workers and about 110 operations personnel. For 20 ground receiving stations, a total of 7700 people will be required.

The satellite will receive most of its control from a central SPS Control Center that will operate all of the satellites. This control centers capabilities will include satellite systems control and status monitoring, station keeping control, and fault detection/isolation. The SPS Control Center will be responsible for creating the

satellite-specific maintenance plans and coordinating the planned satellite maintenance shutdown with rectenna control centers. Both satellite and rectenna planned maintenance will be performed simultaneously during the biannual 3 1/2 day shutdowns. The SPS Control Center will require 240 people to control 20 satellites.

Each of the Rectenna Control Centers are also tied back to a Rectenna/Grid Operations Control group. This group is responsible for managing the rectenna construction operations, providing rectenna systems technical consultants, and coordinating all of the rectenna operations. There are 95 people required for this function.

9.0 OPERATIONS CONTROL

In the preceding sections, we have briefly described the operations that are being conducted throughout the SPS project. A group of people, facilities, and equipment will be required to coordinate and integrate these diverse operations to assure that all program elements are meeting the system requirements in a timely manner.

This coordinating function is assumed to be located in an Operations Control Center where there are located 12 groups of people and their equipment, see Figure 20. These groups either 1) directly control system operations (e.g., the communication systems operations, SPS operations, and space traffic control operations), 2) act as consultants for various system operations that are directly controlled locally (e.g., space construction, LEO Base, and GEO Base operations), or 3) assure that the various SPS activities are suitably integrated (The Integrated Operations group).

The Integrated Operations group is composed of representatives for each of the 12 operations control and consultant groups. This group would prepare master plans and schedules, allocate tasks/responsibilities to local operations, monitor program performance, and direct corrective actions at the system-wide level when appropriate.

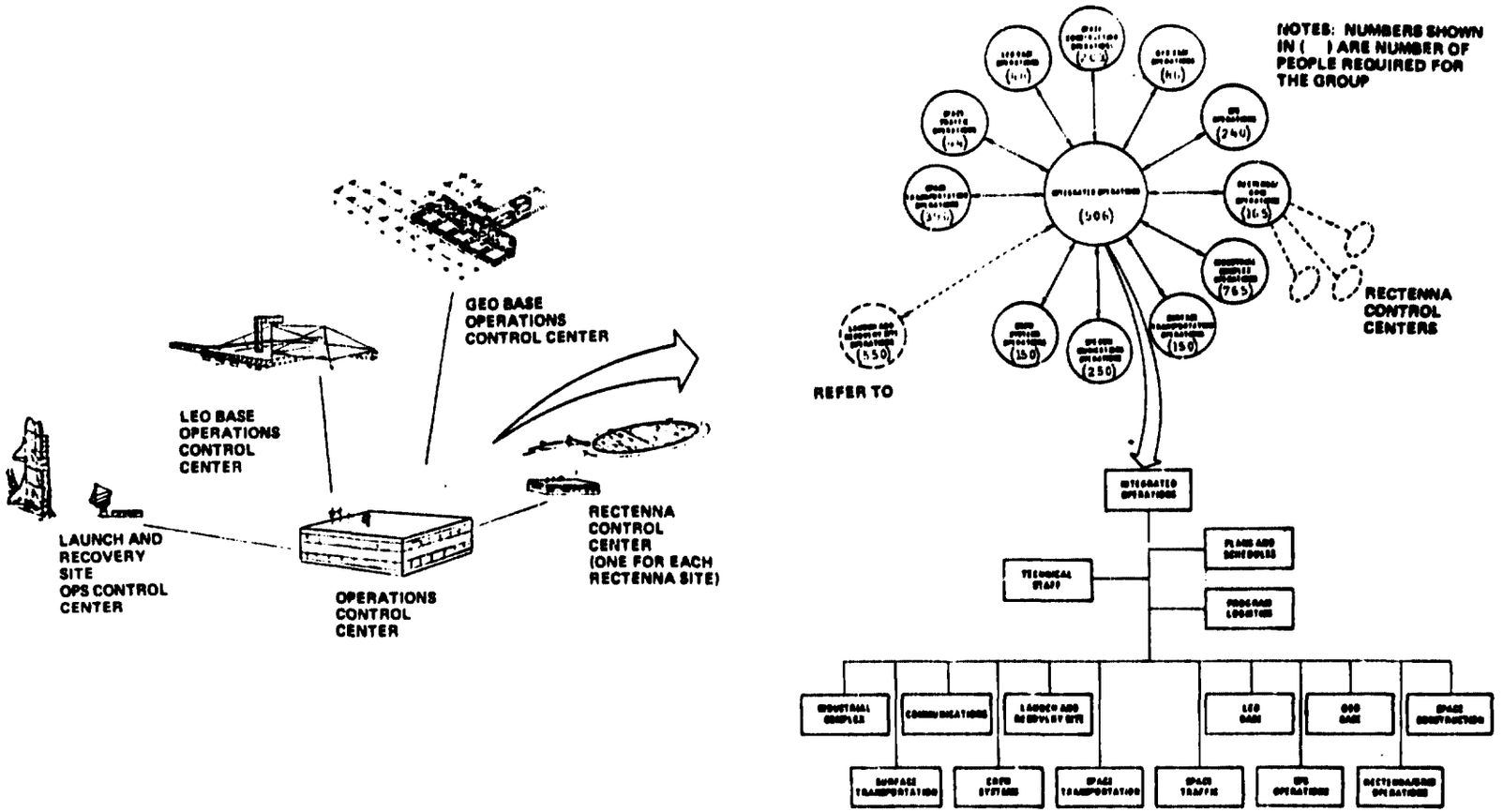

Figure 20 – SPS Program Operations Control Concept

There are operations control people and equipment also located at the launch site, the rectennas, and at both the LEO Base and the GEO Base which locally manage the base operations, construction operations, and space vehicle operations.

The total number of centralized operations control personnel is estimated to 2996 people (estimate based on 20 satellites in orbit).

10.0 SUMMARY

When taken as a whole, the SPS program and its operations appear to be overwhelming. Table 1 summarizes the estimates of the number of people who will be involved. Without a doubt, SPS will be the most ambitious industrial endeavor ever undertaken by mankind. However, as we focus over attention to discrete elements and operations, they do not seem to be so formidable.

While the Earth-based industrial complex will be extensive, it will not be as extensive as the automobile industry infrastructure. While there will be a requirement for the equivalent of 30,000 freight cars per month to support the industrial operations, this requirement is only 1 1/2% of the total freight car movements today.

The construction of the ground receiving stations that cover several square kilometers will be a sizable undertaking. However, the field assembly of preformed elements is certainly within today's state-of-the-art.

At the launch and recovery site, about 8 launches per week will be required. However, by the time SPS comes on line, the Space Shuttle operations will have experience at launching reusable vehicles at the rate of several vehicles every month.

The in-space transportation, construction, and maintenance operations will undoubtedly be the most ambitions advancement in the state-of-the-art. However, we will not try to attain full-scale capabilities at once. The SPS program will proceed in an orderly development cycle. We will start with very small scale demonstrations of the various operations and will proceed in bite-size steps to larger-scale demonstration projects.

TABLE 1

SPS PROGRAM MANPOWER ESTIMATE

	Number of People Req'd During 12th Year of Commercial Operations (20 SPS's in operation)
o Industrial Complex/Surface Transportation Operations	500,000
o Rectenna Construction Operations	2,100
o Launch and Recovery Site Operations	6,425
o LEO Base Operations	
o Space Crews	460
o Ground Support Crews	4,600
o GEO Base Operations	
o Space Crews	888
o Ground Support Crews	8,880
o SPS Maintenance Operations	
o GEO Base Crews	600
o Mobile Crew	85
o Ground Support Crews	6,850
o SPS/Rectenna/Utility Grid Operations	7,700
o Operations Control	2,996
Total	542,000 (approx.)

In conclusion, we can state that all of the various SPS program operations have been examined in enough detail to convince us that there are no operational show-stoppers. Given this chance, it can be done.

SECTION 3

THE INDUSTRIAL IMPACT OF THE SPS

		Page
3.1	Estimation of Industrial Requirements	3-1
3.2	Plant Optimization	3-2
3.3	Specific SPS Sub-Systems	3-3
3.3.1	Photovoltaic Cells and Blankets	3-3
3.3.1.1	Photovoltaic Cells for the Operational SPS	3-4
3.3.1.2	Photovoltaic Cells for an SPS Pilot Plant	3-8
3.3.1.3	Scaling the Photovoltaic Production Plant	3-10
3.3.2	Ion Engines	3-13
3.3.2.1	Fabrication of Ion Engine Components	3-15
3.3.3	Dipole Rectifiers	3-17
3.3.4	DC to Microwave Power Conversion Devices	3-18
3.3.5	Carbon Fibers for Composite Structures	3-20
3.4	Conclusions and Summary	3-23
3.5	References	3-24
Appendix 3.A:	Optimization of a Plant to Provide a Given Inventory at a Given Time	3-25

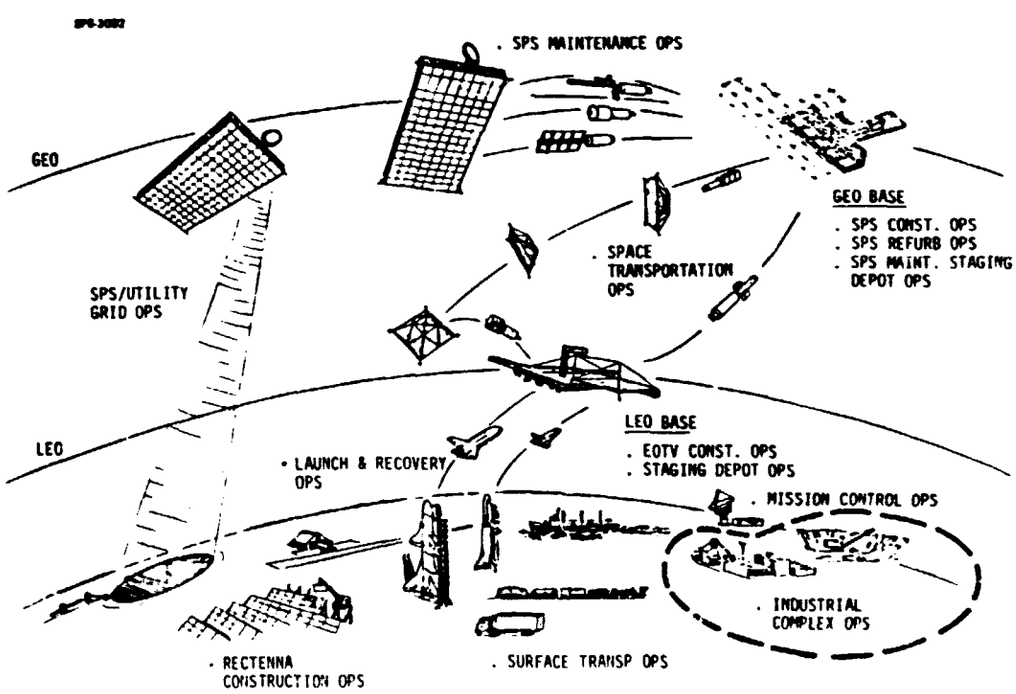

3.0 THE INDUSTRIAL IMPACT OF THE SPS

3.1 Estimation of Industrial Requirements

If the Solar Power Satellite were implemented on a scale sufficient to make a significant contribution to world energy supply, the dollar volume of electric power sales from these systems could grow to rival the sales volume of the largest present industries. Moreover, during the build-up phase, the production and deployment of SPS's (with an annual increase in installed capacity of 10 GW or more) would constitute a major new industry; for comparison, during 1966-67, a boom year for the nuclear power industry, 51 power reactors were placed on order by the U.S. electric utility industry, with a combined capacity of about 40 GW.

There have been several studies to date[1,2,3,4] of the material and resource requirements for supporting SPS build-up scenarios. The purpose of the present study was a preliminary evaluation of the industrial infrastructure required to fabricate SPS components, assuming that the raw materials are available. Specifically, the objective was to determine whether production bottlenecks or other difficulties are probable in the fabrication of the following SPS sub-systems.

- Photovoltaic cells and blankets.
- Electric ion thrusters.
- Dipole rectifiers.
- DC to microwave power conversion devices.
- Graphite composite raw materials.

There are three primary difficulties impeding a realistic analysis of this type at the present time. In the first place, in order to define the industrial complex required for fabrication of a particular sub-system, it is, of course, necessary to assume a particular design for the SPS. The NASA/DOE Baseline Reference System (BRS) provides an example of a design which has been studied in sufficient detail to allow calculation of quantities needed of each sub-system, but there are definite limitations to using a point design such as the BRS as a model for industrial studies. In particular, conclusions drawn from the BRS are of little value if they fail to take account of technical advances which could substantially change sub-system requirements.

Even if the BRS is accepted as the basis for this analysis, a second difficulty is that very little attention has been given as yet to detailed production engineering for most sub-systems. For example, while there is general agreement that the traditional Czochralski method for producing silicon photovoltaic cells from boules of purified silicon is not the technique of choice for the SPS (largely because of inherent energy costs and silicon losses due to boule cutting and wafer sawing), there is a wide and increasing variety of alternative techniques; but most of these have been demonstrated, if at all, only at laboratory scale. Production plant requirements for most of these processes are difficult to specify at present, but it is clear that they depend strongly on the technique used.

Finally, the industrial requirements for SPS fabrication clearly depend on the scenario which is assumed for development and deployment of the system. In the steady state, the plant capacity needed is, of course, proportional to the rate of build-up of installed SPS output capacity, but, as discussed below, there may also be a significant difference in the requirements for fabricating a pilot plant and those in the operational phase.

Given these uncertainties, the approach chosen here was to compare the manufacturing requirements for the SPS with the present and projected capabilities of U.S. industry in related areas. For some sub-systems (e.g., ion engines), there is as yet little or no experience with mass production, but general conclusions may nevertheless be drawn by comparison with analogous manufacturing operations. This procedure allows identification of those sub-systems for which the industrial requirements are modest; for such systems, more detailed investigation appears to be unwarranted pending further development of the SPS concept. More careful consideration is needed in those areas in which the SPS can be shown to entail a significant industrial impact, starting with a preliminary study of production engineering.

3.2 Plant Optimization

In considering production plant capacity requirements for supporting the SPS and the timing of capital investment, it is important to distinguish between two separate cases. If it is required that a given production capacity be available at a time t_2 in the future (for example, to serve a given steady-state rate of build-up in SPS capacity), then it is clearly desirable to postpone investment as long as possible, in order to minimize the cost of capital and to maximize opportunities for incorporating technical advances. The situation is more complicated if the requirement is instead that, at time t_2, a given quantity of the plant product should be available in inventory, as would be the case if the objective were to support deployment of a pilot plant for the SPS. The latter case might also be relevant if the objective were, not to support an unlimited build-up of SPS capacity, but to provide a fixed total capacity within some specified planning horizon.

The problem of plant optimization to provide a quantity y_p of product by time t_2 is considered here in general terms. It is necessary to strike a balance between the need to postpone investment and that of minimizing the capital cost of the plant required to produce the needed inventory on time. Specifically, the analysis in Appendix 3.A develops the variation in the Net Present Value (NPV) of the total cost with the start-up date of the production plant (expressed as years before t_2). The calculation is carried out in constant dollars (i.e., the effects of differential inflation are ignored), but the influence of learning in reducing production cost is taken into account. It is assumed that the cost of raw materials is included in the manufacturing cost.

An important parameter in this calculation is the assumed discount rate. It has been argued[5] that the present high discount rates (e.g., the commercial prime lending rate) include forecasts of inflation, so that, in a constant-dollar analysis, the actual rate should be taken as considerably lower. In other words, it is acceptable to borrow money at a high interest rate if one is confident that general inflation will significantly reduce the value of the dollars used for repayment. One measure of the real cost of capital to the U.S. Government is the interest rate on treasury bonds, corrected for inflation, which has averaged less than 2% over the last decade. Since Government borrowing (or taxation) reduces the capital available to the private sector, it may be that commercial interest rates (or rates of return on equity) give a more realistic measure of the opportunity cost of capital to society as a whole, but even these, when corrected for inflation, have rarely been above 5 to 6%.

The accounting procedures used in assessing the cost of capital are of considerable significance to the SPS, because a low discount rate tends to favor capital-intensive systems such as the SPS over alternative energy technologies which exhibit higher operational costs. However, the

above economy-wide rates are appropriate to relatively low-risk investments: if they are to be used in connection with the SPS, it is necessary to make an explicit and separate accounting of the risks associated with this system.

Increasing the assumed discount rate provides a rough but useful means for taking account of the uncertainties about the SPS industrial infrastructure which were discussed in the previous Section. In particular, the discount rate can be adjusted so as to incorporate judgments about the desirability of postponing investment in production plants pending clarification of the technology to be employed.

For these reasons, a discount rate of 10% is used here, when numerical values are needed. This is the discount rate presently recommended by the Office of Management and Budget (OMB) for assessment of Government-funded projects.

The conclusion reached in Appendix 3.A is that, as a rule of thumb, a plant required to provide a given inventory by a time t_2 should have a start-up date which is about five years earlier, although the optimum is quite broad.

3.3 Specific SPS Sub-Systems

3.3.1 Photovoltaic Cells and Blankets

An earlier report by Arthur D. Little, Inc.,[2] provided an assessment of both the resource requirements and potential manufacturing processes for silicon (Si) or gallium arsenide (GaAs) photovoltaic arrays for the SPS. In that study, it was assumed that one of several production processes for Si cells would be used which are based on growing from a melt a ribbon of semiconductor grade (SeG) silicon.

A recent article in *Electronics*[6] provides an excellent overview of developments in photovoltaics, at least for terrestrial applications. There is a sidebar on the SPS, but unfortunately it reiterates common fallacies about the system; by quoting out of context, it implies that the RDT&E cost for the SPS may be $500 billion, it raises questions about the environmental effects of "concentrated microwaves," and displays an ignorance of orbital mechanics by suggesting that, like Skylab, a power satellite might fall to Earth. The rest of the article, however, is probably the best available reference on the state of the photovoltaic art.

Given these references, manufacturing processes for photovoltaic arrays will not be discussed again here.

A continuing problem is the relatively low priority given solar cells for space applications (especially the SPS) in the National Photovoltaic Program. Without close coordination of development, it is not at all clear that cells developed for terrestrial applications will prove suitable for the SPS; and the need for low specific mass and high efficiency in SPS photovoltaic arrays may lead to cells which are too costly and/or too fragile for terrestrial uses. Nevertheless, the magnitude of the projected market for terrestrial solar cells provides a useful standard of comparison in estimating the industrial impact of the SPS.

3.3.1.1 Photovoltaic Cells for the Operational SPS

Figure 3.1, adapted from the referenced report[2], shows projections of the terrestrial market for single-crystal Si cells and GaAs cells with concentration. The growth curve for Si cells is exponential, with a projected time constant of only about one year. Naive extrapolation of this curve would lead to the conclusion that the terrestrial market might be much larger than that for the SPS by the time that system was operational, but this is clearly unrealistic. If this growth were to continue until the end of the century, it would give a total installed terrestrial photovoltaic capacity whose average output (allowing for outages due to night, weather, etc.) would be an order of magnitude larger than the projected U.S. demand for electric energy at that time.

The market for terrestrial solar cells at the end of the century remains quite uncertain. Several studies carried out under the auspices of the National Photovoltaic Program[7] have led to widely differing estimates, ranging from negligible impact up to the displacement of as much as 7 quads of primary energy (1 quad = 10^{15} BTU = 33.4 GW-years). The most recent such study, undertaken in connection with the Domestic Policy Review of Solar Energy, gave a range of values from about 0.1 quad to more than 1 quad. With an average conversion efficiency in conventional power plants of 35%, displacing 1 quad of primary energy would yield 11.7 GW-years of electricity. In the United States, the ratio of peak to mean power output from a photovoltaic cell[7], averaged across the nation, is about 5, so this would require a total installed photovoltaic capacity of about 58.5 GWp.

Even if there were general agreement about the impact of terrestrial solar cells on U.S. energy supply in the year 2000, the solar cell production capacity which would be needed to achieve this energy output depends strongly on the shape of the growth curve. For one example, assume a smooth exponential growth in production of solar cells, so that the production rate after a time t is:

$$P = P_o e^{t/t^*} \qquad [3.1]$$

where $P_o \simeq 1$ MWp is the production in the base year 1980. If essentially all the cells remain in service, the installed capacity at time t is given by integration as:

$$Q = P_o t^* (e^{t/t^*} - 1) \qquad [3.2]$$

For a given displacement of primary energy, this equation can be solved for the time constant t^*, giving the results shown in Figure 3.2. These values can then be used in [3.1] to give the needed production rate in the year 2000, as shown in Figure 3.3 (Curve A).

As another example, it might be assumed that production would increase with the time constant illustrated in Figure 3.1 until a time t°, and then level off. In this case, the installed capacity at time t is readily found to be:

$$Q = P_o \left[t^* (e^{t^\circ/t^*} - 1) + e^{t^\circ/t^*} (t - t^\circ)\right] \qquad [3.3]$$

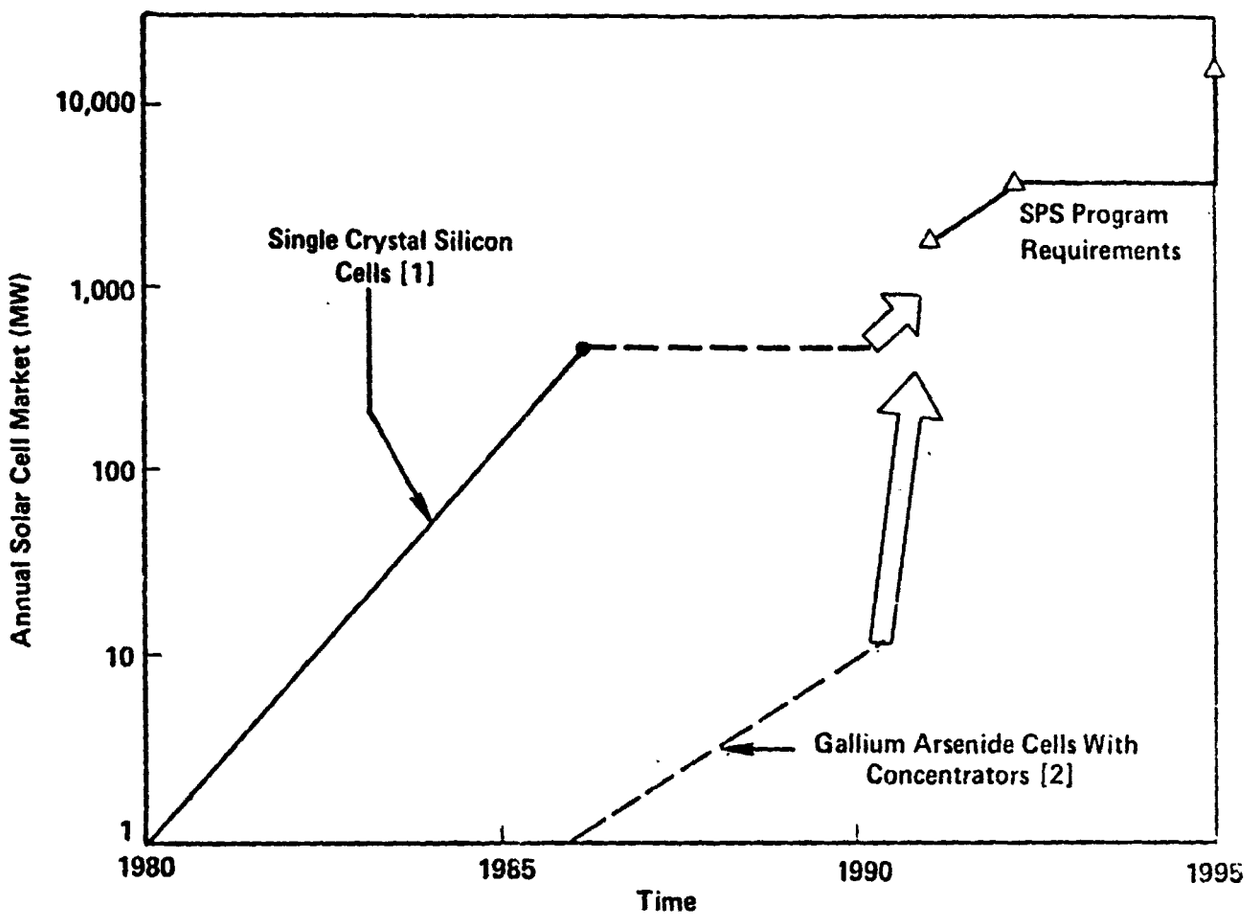

1. Source: Reference 5
2. Source: Arthur D. Little, Inc., estimates

FIGURE 3.1 SOLAR CELL TERRESTRIAL MARKET GROWTH SCENARIOS

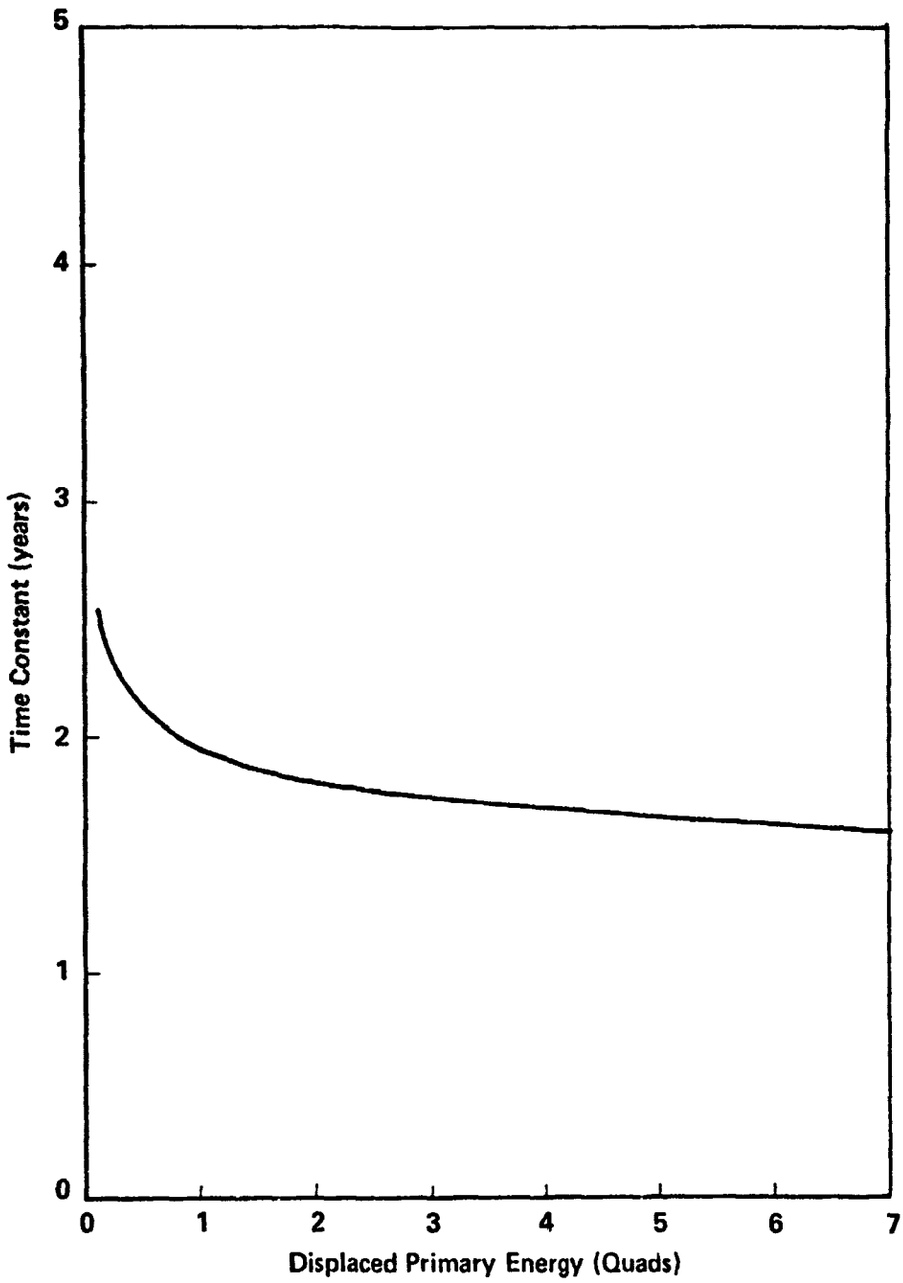

FIGURE 3.2 TIME CONSTANT FOR EXPONENTIAL GROWTH IN PHOTOVOLTAIC PRODUCTION VS. INSTALLED CAPACITY IN THE YEAR 2000

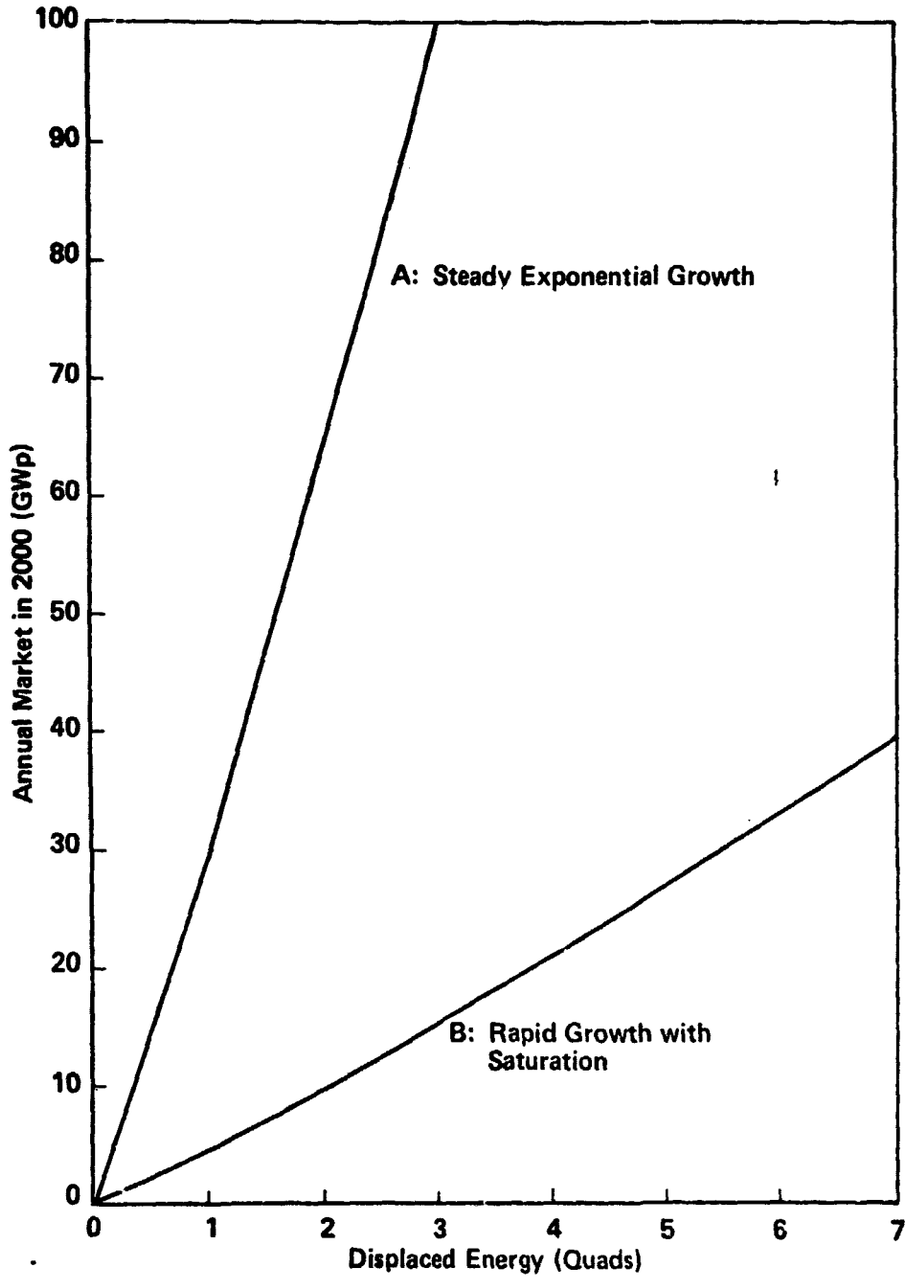

FIGURE 3.3 GROWTH SCENARIOS FOR PHOTOVOLTAIC PRODUCTION

Given the time constant $t^* \simeq$ year from Figure 3.1, this equation can be solved for t°. After this time (which varies from 6 to 10.5 years as the displaced primary energy increases from 0.1 to 7 quads), the production rate would have the constant value:

$$P = P_o e^{t^\circ/t^*} \qquad [3.4]$$

which is also shown as a function of the displaced primary energy in Figure 3.3 (Curve B).

Figure 3.4 shows these two growth curves, scaled so as to allow the displacement of 1 quad of primary energy in 2000.

The second growth mode is clearly much more efficient, in terms of the plant required for producing solar cells, but it involves commitment to a particular type of solar cell and production process at a fairly early date t°, and depends on a sustained very high growth rate in the market until that time. For a given displacement of primary energy, the actual production capacity in the year 2000 will probably lie between these curves. Unless the most optimistic market penetration forecasts prove realistic, it seems probable that the terrestrial photovoltaic production capacity in the United States will be, at most, comparable to that needed to support a build-up of SPS capacity at a rate of 10 GW per year.

The principal conclusion to be drawn from this analysis is that the production of photovoltaic arrays for the SPS is one of those areas where quite significant industrial impact must be expected. Manufacture of solar cells for terrestrial applications will, however, face a quite similar problem if that technology achieves substantial market penetration.

The throughput of materials, the energy budget, and some preliminary work on potential fabrication processes were discussed in the earlier report[2]. Since only the single-crystal Si cell, fabricated with relatively conventional technology, is sufficiently well understood to allow more detailed production studies, and since some other cell (or at least an advanced production technique) will almost certainly be used in operational SPS systems, the additional information gained from extending this analysis would be of little value. If the first production SPS is to come on-line in 1995, it will not be necessary to begin construction of a high-capacity solar cell plant for it until the late Eighties; in the interim, advanced solar energy conversion technology should be vigorously pursued, with production engineering studies as an integral part of the research.

It should be noted that coordination of the terrestrial and SPS photovoltaic development programs could alleviate problems in both sectors. If a reasonable degree of commonality between the two cell production processes can be achieved, and if the terrestrial market exhibits the projected very high initial growth, SPS production might be able to maintain orderly growth in the industry as the terrestrial market approaches saturation.

3.3.1.2 Photovoltaic Cells for an SPS Pilot Plant

As discussed in Volume IV, Task 41119, it may be possible to build an SPS with a busbar output as low as 2.5 GW without major increases in the cost per kilowatt associated with the photovoltaic array and the microwave power transmission system (MPTS). In absolute terms, such a reduction in power would reduce the capital investment by several billion dollars, so that it is very probable that a pilot plant would be of this type. After the technology has been proven, it might be possible to increase the size of the pilot plant to full operational output.

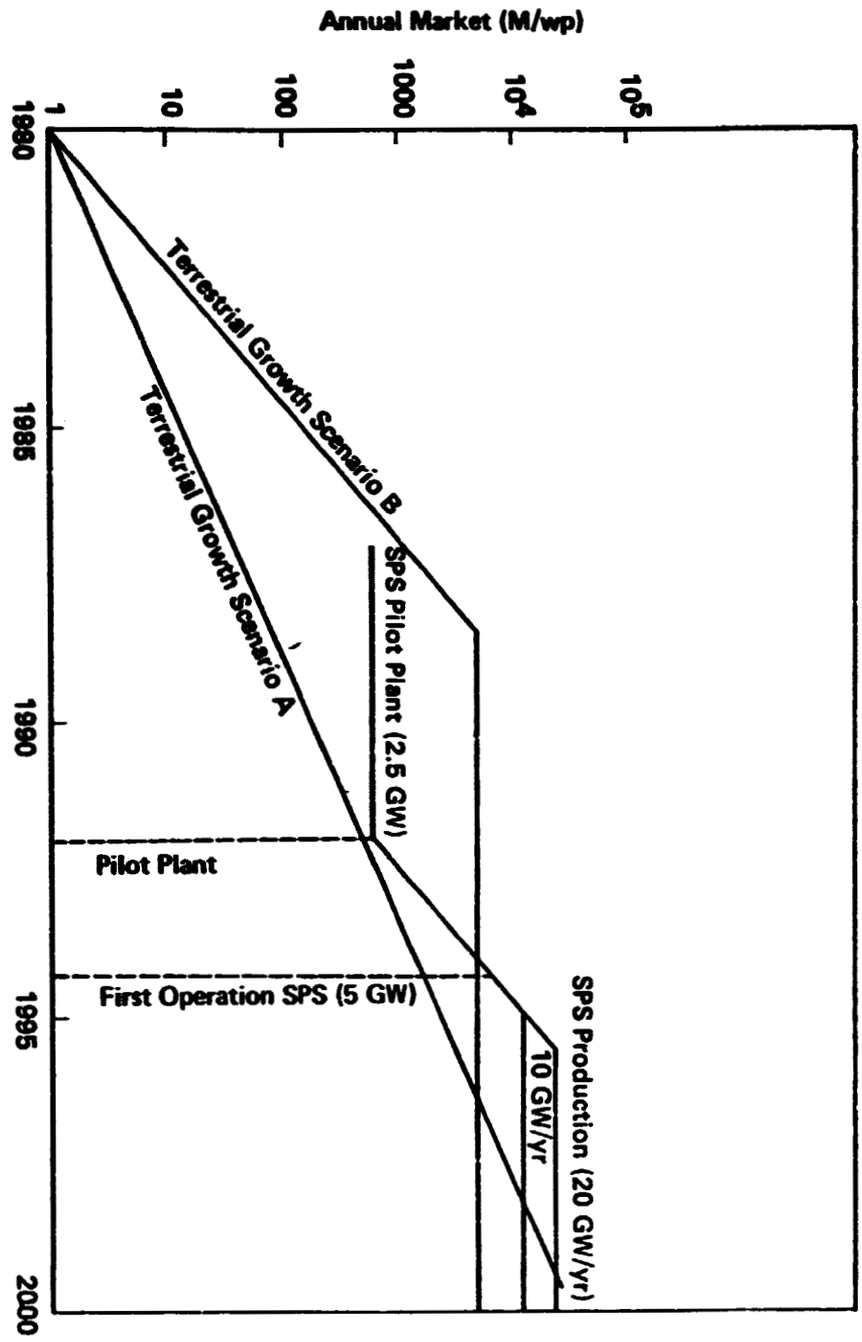

Note: Terrestrial Growth Curves are scaled to displace 1 Quad of primary energy in 2000.

FIGURE 3.4 COMPARISON OF SPS PHOTOVOLTAIC PRODUCTION REQUIREMENTS WITH TERRESTRIAL MARKET GROWTH SCENARIOS

Unfortunately, building a microwave SPS pilot plant at reduced power would not entail significant savings in other major cost elements. In particular, it would still be necessary to develop launch vehicles, orbital transfer vehicles and construction facilities in orbit which would be essentially the same as those required for the operational system.

One other advantage of a lower-power pilot plant is that it can simplify the development of the photovoltaic industry to support the operational system. The analysis in Appendix 3.A suggests that production of solar cells for the pilot plant should be spread over about 5 years. With allowance for the inefficiencies in the MPTS, this leads to an annual production capacity of perhaps 600 MWp: Figure 3.4 shows a scenario for development of this production capacity, based on a readiness date for the pilot plant of 1992. Thereafter, the curve shows an increase with a time constant of one year, leading to an additional inventory of 5 GWp in 1994 and a full-scale production capability in 1995, sufficient to support SPS build-up at 10 GW per year.

The required production rate for the pilot plant lies within possible bounds for the photovoltaic industry, based on projections of the terrestrial market. Perhaps more importantly, it allows development of operational experience with an SPS photovoltaic production facility, over a period of five years, at a scale which is more than an order of magnitude below that needed to support the operational system.

3.3.1.3 Scaling the Photovoltaic Production Plant

As discussed above, insufficient information is as yet available to allow a realistic assessment of the production requirements for manufacturing photovoltaic cells which might actually be used in the SPS. However, a useful upper bound on the required plant may be obtained by considering what would be involved in fabricating single-crystal silicon cells by the presently-used Czochralski process, on a scale sufficient to support build-up of SPS capacity at 10 GW per year.

Figure 3.5 illustrates the production steps in this manufacturing process[8]. The steps shown differ from those now in use only in that, after 100-micron wafers are sawn from the Czochralski-grown ingot, etching with hot NaOH[9] is used to reduce cell thickness to 50 microns. Table 3.1 was obtained by starting with the mass of silicon in the finished cells for a 10 GW SPS (14,000 metric tons) and using the typical yield in each step to obtain the required silicon input. These figures were then used to estimate the energy input (using the data in Ref. 8), the capital cost of the production equipment (using estimates by Boeing and ADL, Inc.) and the floor area needed in the plant.

The total energy input to this process was calculated as 6.7×10^{10} kwh(e). A single 10 GW SPS can provide this energy in a period of about nine months. The capital cost of the plant was estimated as $2.7 billion, and the floor area as 258,000 m^2 (which is comparable to the area of the Boeing 747 aircraft plant).

It must be emphasized that, while there is considerable uncertainty in these figures, they are almost certainly large compared to what would be required in practice. In the calculation, no allowance was made for recovery and recycling of energy or materials (e.g., silicon lost as kerf during sawing or etched away while reducing the thickness of the cells). Moreover, the inefficiencies in the process shown provide one of the reasons for the present high cost of solar cells: there is very little doubt that improved processes for single-crystal silicon cells (and/or cheaper

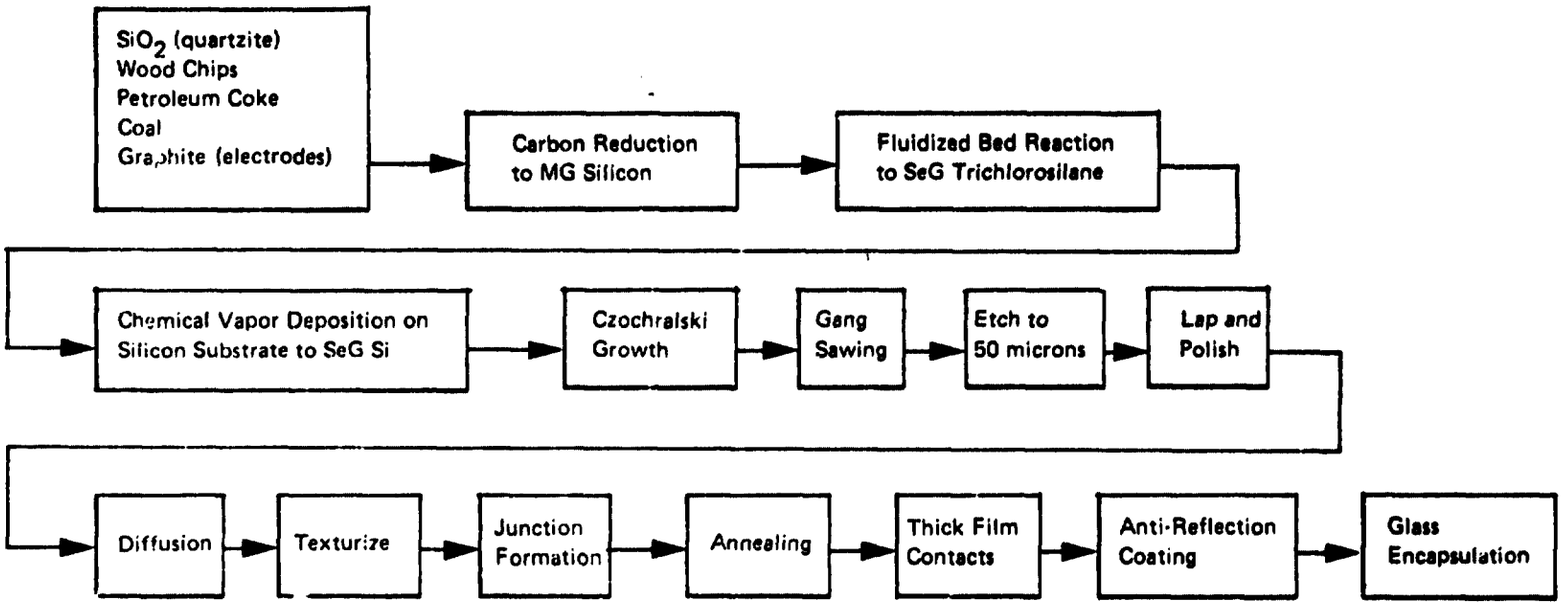

FIGURE 3.5 PRODUCTION STEPS IN THE CZOCHRALSKI PROCESS FOR 50-MICRON SINGLE-CRYSTAL SILICON PHOTOVOLTAIC CELLS

Process Step	Silicon Mass Input	Energy Required	Capital Cost*	Floor Area	Cost	Remarks
	(Metric Tons)	(kWh(e))	($ millions)	(m^2)	($ millions)	
Reduction to MG Silicon	526,000	1.0×10^{10}	50	600	Inc.*	5 8-meter crucibles
Fluidized Bed Reaction to $SiHCl_3$	420,000	3.6×10^{9}	30	800	Inc.	Cu Catalyst
CVD on Si Substrate to SeG poly Si	252,000	4.4×10^{10}	400	40,000	40	Growth 1.5 cm/day
Czochralski Growth	93,400		418	10,000	10	Ingot growth 12 cm/hr 14 cm diameter 1670 crucibles
Gang-Sawing Wafers	56,000		430	100,000	100	43,000 gang saws 500 saws/gang 100 μm cut 100 μm wafers 20 hrs/gang cut
Etch to 50 μm	28,000		50	10,000	Inc.	Hot NaOH etch
Lap & Polish	14,000		25	5,000	Inc.	10 minute operation
Diffusion	14,000		300	30,000	Inc.	90 minute operation
Texturizing	14,000		25	5,000	Inc.	10 minute operation
Junctions	14,000	9.2×10^{9}	100	1,000	Inc.	1 minute operation
Annealing	14,000		50	5,000	Inc.	10 minute operation
Contacts	14,000		10	1,000	Inc.	1 minute operation
AR Coating	14,000		400	20,000	Inc.	50 minute operation
Glass Encapsulation	14,000		300	30,000	Inc.	2100 lines, 1 m. wide 10 cm/min.
Totals		6.7×10^{10} (9 months payback)	2588	258,400	150	

*INCLUDED IN CAPITAL COST

TABLE 3.1: SCALING OF CZOCHRALSKI PROCESS FOR A 10 GW SPS

types of cell) can and will be developed. It is in fact remarkable that the figures obtained in this calculation are so modest — for example, if the capital cost is amortized at 10% per annum, the resulting charge against the SPS would amount to only $27 per kilowatt of power delivered.

The figures given here are for production of the operational SPS. The requirements for producing cells for a 2.5 GW SPS pilot plant, as discussed in the previous section, would be lower by more than order of magnitude. However, the earlier commitment to photovoltaic cell production in the pilot plant scenario could mean that the cells used in the pilot plant are of a different type to those for the operational system, so that capital costs for the pilot plant solar cell fabrication could not be amortized over the operational systems. The assumptions in the previous section (solar cell production for the pilot plant at the rate of 600 MWp/year) lead to a capital cost for this cell production plant of about $170 million: if this is to be amortized over a single pilot plant, the burden would amount to about $68/kw.

3.3.2 Ion Engines

An analysis was undertaken of several design studies for the SPS, in order to determine the total number of ion engines required each year during the build-up phase. The results are shown in Figure 3.6. The requirements range from about 4300/year for the NASA/baseline (July 1978) to about 45,000/year for the Boeing design. It is noteworthy that the revisions to the NASA baseline to give the NASA/DOE baseline of October, 1978, resulted in almost an order of magnitude increase in thruster requirements.

Most of the thruster requirements arise from replacement or refurbishment rather than from fabrication of original equipment. The relatively rapid increase of the number required with time in the Rockwell design is due to extensive use of ion engines in the attitude control system (ACS) of the SPS: in the steady state, for a fixed thruster lifetime, the annual production increases linearly with the number of satellites in operation. For all the designs, it is clear that the mean time between failures (MTBF) of the ion engines is a dominant factor in determining production requirements. The assumed MTBF's are roughly comparable in all the designs, but there is as yet insufficient experience with Argon (Ar) thrusters in the 100-120 cm diameter range to allow confidence in the operational lifetime.

While the characteristics of individual thrusters (thrust, Isp, power level, etc.) clearly affect the number required, the differences are determined much more strongly by system design.

It is generally assumed that Ar thrusters will be used for the SPS application, primarily because of the ready availability of this propellant. However, the environmental impact of the large-scale release of energetic Ar ions into the ionosphere/plasmasphere system of the Earth needs careful study. One preliminary study suggests that the number of ions released in the deployment of each SPS will be comparable to the natural population within the magnetosphere, while the energy released will exceed that of the natural ions. The effects of this in the upper reaches of the plasmasphere are debatable (it could, for example, lead to increasing effects associated with spacecraft charging), but a more immediate problem is a significant increase in the precipitation of energetic ions (typically in the 5 keV range) in the ionosphere. The effects of this could be quite similar to those of a solar flare (including impairment or disruption of terrestrial radio communications), but on an essentially continuous basis during the build-up of the SPS. If these effects prove to be significant, they can perhaps be alleviated by modifying the

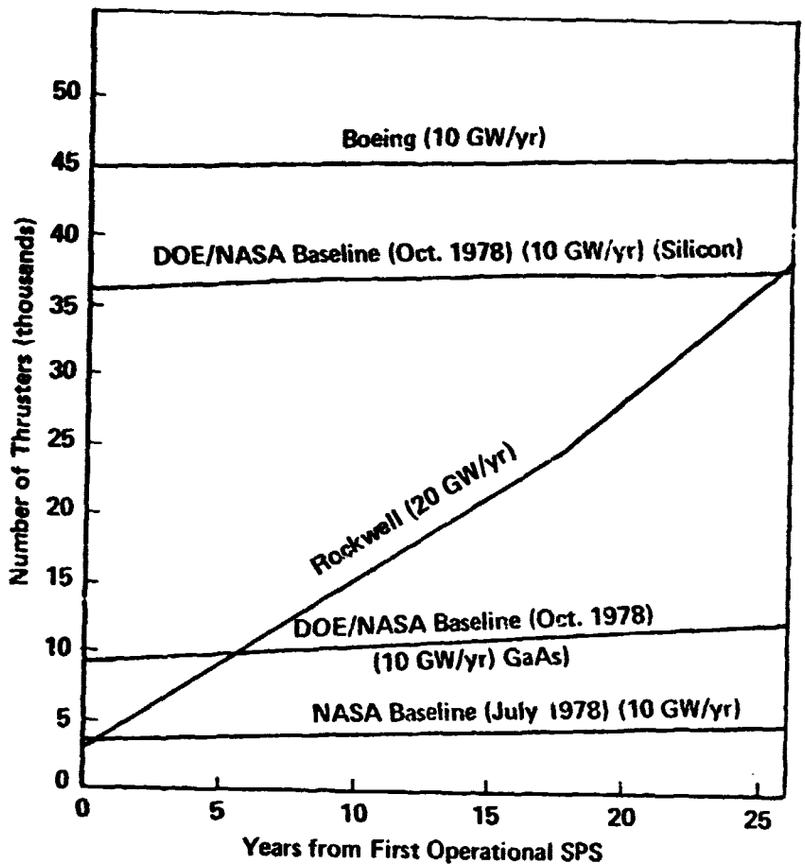

FIGURE 3.6 NUMBER OF ION THRUSTERS REQUIRED PER YEAR (ORIGINALS PLUS REPLACEMENTS)

thruster design (at constant thrust, increased Isp reduces the rate of ion release but increases the energy), by designing the SPS system to minimize thruster utilization, and by choice of propellant. While there are conceptually feasible orbit-raising techniques which do not involve ion engines (e.g., the solar sail[10]), this technology is so important to any large-scale uses of space that an extensive theoretical and experimental investigation of the possible environmental effects is urgently needed.

Note that the bolo satellite system discussed in Volume IV, Task 41119 does not eliminate these problems, because ion engines are needed for orbit and spin maintenance of the bolos.

The present situation is thus that there is considerable uncertainty about both the numbers of ion engines which will be required to support the SPS build-up and about the types of engine or design features that are needed to minimize adverse environmental impacts. Moreover, there is little operational experience to date with types of ion engines other than relatively small-scale Hg units (which are certainly not appropriate to the SPS) and virtually no attention has yet been paid to designing ion thrusters for mass production.

The characteristics of the production plant depend critically on the design lifetime of the thrusters, and on decisions about whether they are to be replaced or refurbished (presumably in orbit) when they are worn out. If a low-lifetime expendable unit is required, it might be acceptable to mass produce them from readily available materials, with a minimum of quality control, pre-use testing, burn-in, etc.; this would lead to the design of a plant quite different to that required to fabricate extremely reliable, high-performance thrusters made to close tolerances by skilled labor from exotic materials. As discussed below, present ion engines require encapsulation in vacuum or an inert atmosphere to prevent contamination or oxidation after manufacture: if there is to be a refurbishment facility in LEO, it may be desirable to carry out final assembly of original units there also, so that only sensitive components need be protected from the atmosphere before and during launch.

Given these uncertainties, it would be quite premature to attempt a detailed definition of a production process for SPS ion engines, in terms of materials employed, fabrication equipment requirements, complexity of assembly, or amount and type of required testing. To scope the problem, however, it may be useful to consider, in general terms, the materials and steps involved in building the present types of ion engine. Most of the data given here are derived from experience with 30-cm Hg thrusters,[11-17] with some extrapolation.

3.3.2.1 Fabrication of Ion Engine Components:

i) Optics. The ion optics of present thrusters are typically formed from low-carbon molybdenum sheet. Blanks are imprinted on both sides with photoresist and then formed to the required shapes in a heated hydrostatic press. After chemical etching to produce apertures and mounting holes, the components are stress-relieved at c. 1000°K, in vacuum for three hours.

ii) Support Rings. It is critically important to long-term stability and high lifetime that the support rings provide a flat, structurally sound (and light weight) base on which to mount grids (the flatness tolerance for the grids may be ± 0.005 cm). The rings may be made from commercially-pure titanium plate and tube stock. After rough machining, the rings are stress-relieved by heating them between heavy flat-ground plates to about 1300°K, and then machined to final tolerances.

iii) Insulators. These are made of high-purity alumina, with the ends metallized and endcaps brazed with pure copper in a reducing atmosphere (hydrogen). After grinding for flatness, the assemblies are ultrasonically cleaned and grit-blasted with high-purity alumina prior to final installation.

iv) Hollow Cathodes. It is particularly important that cathodes be kept clean, without contamination or oxidation. A spray coating of aluminum oxide (Al_2O_3) is applied over tungsten, with electron beam welding of supporting straps. RF brazing in vacuum is used to attach flanges. A final coating of alumina is applied to the complete assembly.

v) Discharge Chamber. These are made from thin-wall titanium, stainless steel, or sometimes aluminum alloy (6061), strengthened by ribs and support struts. A dry argon welding facility is required.

vi) Anodes. Titanium is the usual material of choice, because of its nonmagnetic character, high sputtering resistance and high temperature capability.

vii) Magnets. Electromagnets are relatively conventional copper-coil assemblies. Alnico V may be used for permanent magnets.

viii) Neutralizer. Construction techniques are generally similar to those for cathodes, with the additional requirement of high electron emissivity. Materials involved may include tantalum, thoriated tungsten, barium and strontium carbonates, and aluminum oxide.

ix) Body and Shell, Brackets, and Supports. These may be made from titanium, stainless steel or aluminum alloy, using conventional welding, forming and drilling techniques.

x) Testing. A burn-in test in vacuum is required to purge contaminants (H_2O, CO_2 and hydrocarbons) and confirm performance. Units must be stored in a sealed tank (vacuum or inert atmosphere) to prevent recontamination.

Ion engines are not in themselves very complex assemblies. However, close tolerances must be maintained in fabrication and assembly, some fairly exotic materials are employed, and special handling and fabrication processes are needed. Production requirements may be divided into the following general categories:

- Metal forming and fabrication (including titanium, molybdenum, tungsten, etc.).
- Chemical treatment and processing.
- Special handling procedures (dependent on materials used).
- Clean-room assembly techniques.
- Testing.
- Packaging and shipping, handling and launch preparation.

During refurbishment, the parts to be replaced most frequently are those which are electrically active (cathodes, anodes, neutralizer and grids). It is noteworthy that these are also the components which require most careful procedures in manufacture and handling. It may be possible to build ion engines, less these components, in a relatively conventional factory environ-

ment, with a special facility for manufacture of these sensitive parts. If final assembly is carried out in orbit, the natural vacuum environment would simplify assembly and storage procedures.

In any case, there do not appear to be any production processes for ion engines which are radically different to those now in use in the aerospace and electronics industries. With simplified design and attention to production engineering, insuperable production problems are unlikely to be encountered. Moreover, even the higher estimates of the number of units required (c. 45,000 per year) lead to a minor industrial impact. The production rate is minuscule compared, for example, to that in a modest color television picture tube plant, which uses a number of analogous manufacturing techniques.

While production engineering should clearly be given strong emphasis in the design and development of ion engines for the SPS, the general conclusion is that the industrial infrastructure needed for this sub-assembly will not pose significant problems.

3.3.3 Dipole Rectifiers

For a given total power output, there are basically three SPS system parameters which determine the area of the rectenna: (i) The wavelength of the radiation in the power beam: because of spectrum availability and atmospheric transmittance effects, this is likely to remain at S-band, close to the present nominal value of 12.2 cm. (ii) The flux density taper across the rectenna, which is determined by the power and phase taper across the transmitting antenna (spacetenna): minor changes are possible due to improved cost optimization. (iii) The peak flux density at the rectenna, which is presently limited to 23 mW/cm^2, in order to avoid ionospheric instabilities: experiments at Arecibo suggest that this can be raised,[18] but major increases may be precluded because of microwave effects on airborne biota passing through the beam (birds and people in light aircraft and perhaps balloons).

The total land area for the rectenna, of course, also depends on the latitude of the site and the necessary exclusion area to avoid public exposure to low-level microwaves around the periphery, but these factors do not affect the required area of rectenna elements, if they are mounted on billboards, perpendicular to the beam.

It is, therefore, probable that the area of rectenna elements for a 5 GW rectenna which is assumed in the BRS (78.5 km^2) is accurate within a factor of at most two. The density of elements depends on the particular rectenna design, of which a wide variety have been proposed; in particular, the density depends on the antenna gain of the individual elements.

For illustrative purposes, the most elementary type of rectenna is considered here, in which the individual elements are simple half-wave dipoles, formed from aluminum strip, with a half-wave rectifier (a Schottky barrier diode) for each element. This design, which leads to a requirement for approximately 10^{10} dipole rectifiers per rectenna, is almost certainly not the cost-optimum configuration, but it leads to a useful upper bound on the production requirements.

The only significant manufacturing problem is the sheer number of dipole rectifiers which must be produced. To support build-up of SPS capacity at the rate of 10 GW per year, a continuous production process capable of delivering completed elements at the rate of 625 per second is needed. Fortunately, a high degree of automation is clearly feasible: a machine can

readily be envisaged which takes as input aluminum strip or wire, diodes, and supporting structural elements, forms the individual elements and assembles them into billboard arrays. For full-scale production, several hundred such machines may be needed, working in parallel.

A typical dipole rectifier is sketched in Figure 3.7. The dipole itself is formed from aluminum strip, 1 cm wide and 0.02 cm thick,[19] for a total mass of about 2.1 gm/dipole. Since each dipole contains about 36 cm of strip, producing 2×10^{10} dipoles per year (i.e., for 10 GW) would require a total throughput of strip at the rate of 225 m/sec. A roughly similar throughput of busbar for connecting the rectifiers together in billboards would also be required. Divided between several hundred machines, these rates do not seem excessive. In terms of mass, the plant would consume some 42,000 metric tons of aluminum per year (for dipoles only), or about 1.3 kg/sec.

The production rate for Schottky diodes for the dipole rectifiers, under the above assumptions. is 2×10^{10} per year, an impressive figure. However, these components can also be produced in a highly automated facility, although it would undoubtedly be a major plant by current standards in the electronic components industry. The material throughput for the diodes is relatively modest (e.g., 14 tons/year of GaAs), so that it is not expected that a dedicated diode facility would be of sufficient magnitude to stress industrial capabilities.

There is a great deal of room for improving the cost and decreasing manufacturing complexity for the rectenna, through design changes. For a simple example, a single diode may be fed in-phase by two dipoles, halving the number of diodes required and slightly improving the efficiency. More radical changes could lead to an integrated production facility for billboard arrays, including diode manufacture to avoid handling very large numbers of discrete components.

As in the case of photovoltaic cells, a preliminary commitment to a 2.5 GW SPS pilot plant would simplify build-up of the industrial capacity for dipole rectifiers, allowing operational experience to be gained at production levels an order of magnitude below those needed when full-scale deployment of the SPS is under way. As discussed in Volume IV, Task 41119, Appendix 1.B at 2.5 GW the optimal rectenna area may be slightly larger than that obtained if the ionospheric flux density limit is maintained (i.e., the area, and hence the required number of dipole rectifiers, may not be strictly proportional to the power output), but the difference is minor.

3.3.4 DC to Microwave Power Conversion Devices

The options for generating microwave power at the spacetenna plane include high-power klystrons, crossed-field devices such as amplitrons or magnetrons, and solid-state devices. The NASA baseline SPS requires 101.552 klystrons, each rated at 67.5 kW output, to provide a total radiated power of 6.85 GW, leading to 5 GW at the rectenna/utility interface. Build-up of 10 GW of SPS capacity each year thus requires production of about 200,000 such tubes annually.

The U.S. production of klystrons in 1977 was 77,000 tubes,[19] but only about 7000 of these were rated as high-power devices. By SPS standards, the present capacity for producing klystrons must be regarded as negligible.

It is instructive, however, to consider, not just klystrons, but the microwave industry as a whole. More than 90% of the new microwave power generation capability each year in the United

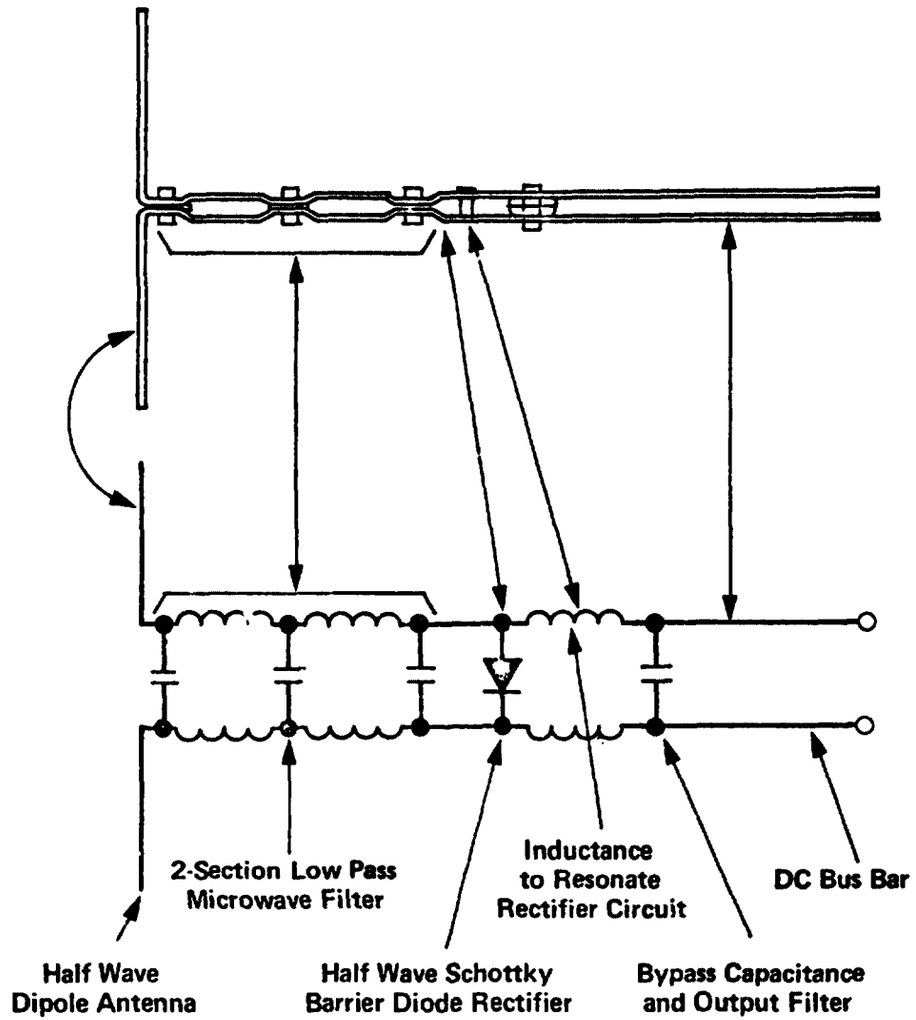

FIGURE 3.7 SIMPLE DIPOLE RECTIFIER AND ELECTRICAL SCHEMATIC

States now comes from magnetrons, most of which are used in microwave ovens. It is not yet clear whether these tubes are suitable devices for use in the SPS, although recent work by Brown[19] has given encouraging results regarding phase control in and the noise characteristics of the common oven magnetron. In any case, the remarkable growth in production of microwave ovens gives an indication of the capabilities of the industry, in response to market demand.

Figure 3.8 shows the history of microwave oven sales in the United States, in terms of power generation capability. Most of the individual tubes are rated at 600 to 750 watts. Present sales are close to 2 GW per year, and nearly 5 GW of capacity has been introduced since 1972. Linear extrapolation of this curve to 1995 leads to sales in that year in excess of 6 GW, but it is highly probable that market saturation will have set in before that time, since otherwise nearly 100 million ovens would have been sold.

It is important to note that, as in other segments of the consumer electronics industry, much of the production is imported. Domestic production of oven magnetrons in 1978 amounted to not much over 100 MW; most of the imported ovens and/or magnetrons came from Japan. Recently, however, there has been a noticeable reversal of the trend towards foreign production of electronic goods, as the disparity between U.S. and foreign labor costs is reduced because of significantly higher economic growth rates elsewhere. For example, several major Japanese television producers have built plants in the United States during the last two years; these decisions are, of course, influenced in part by governmental policy aimed at mitigating the trade imbalance with Japan.

Whether or not microwave devices for the SPS are produced in the United States does not seem a critical question. Indeed, as in the case of Schottky diodes for the rectenna, microwave power conversion equipment may be a useful area for offset production arrangements, to improve the attractiveness of the SPS as an energy source in foreign countries.

This is, of course, another area in which detailed production engineering studies are needed before final design decisions are taken regarding which type of device to use in the SPS. However, the statistics given here suggest that the microwave industry is entirely capable of meeting the challenge of the SPS: it is likely to be seen, not as a problem, but as a great opportunity.

Based on the analysis in Volume IV, Task 41119, the annual production requirements for building a 2.5 GW SPS demonstration plant would amount to about 600 MW per year. This is well within *current* production capabilities, if the tube used is basically similar to the oven magnetron.

3.3.5 Carbon Fibers for Composite Structures

An analysis of the BRS suggests that 3 to 4 thousand metric tons of carbon composite structures may be required for each 5 GW SPS. Assuming that the carbon fiber (CF) content of these structures is comparable to that in present aircraft applications (c. 60% by mass), the annual CF production needed to support the SPS build-up may amount to 3500 to 5000 metric tons (there does not appear to be any significant problem in producing the epoxy matrix in adequate quantities).

Carbon fiber composites are manufactured from a precursor material which is subjected to stress and heat treatment, causing a change in the physical properties of the fiber. The fibers are

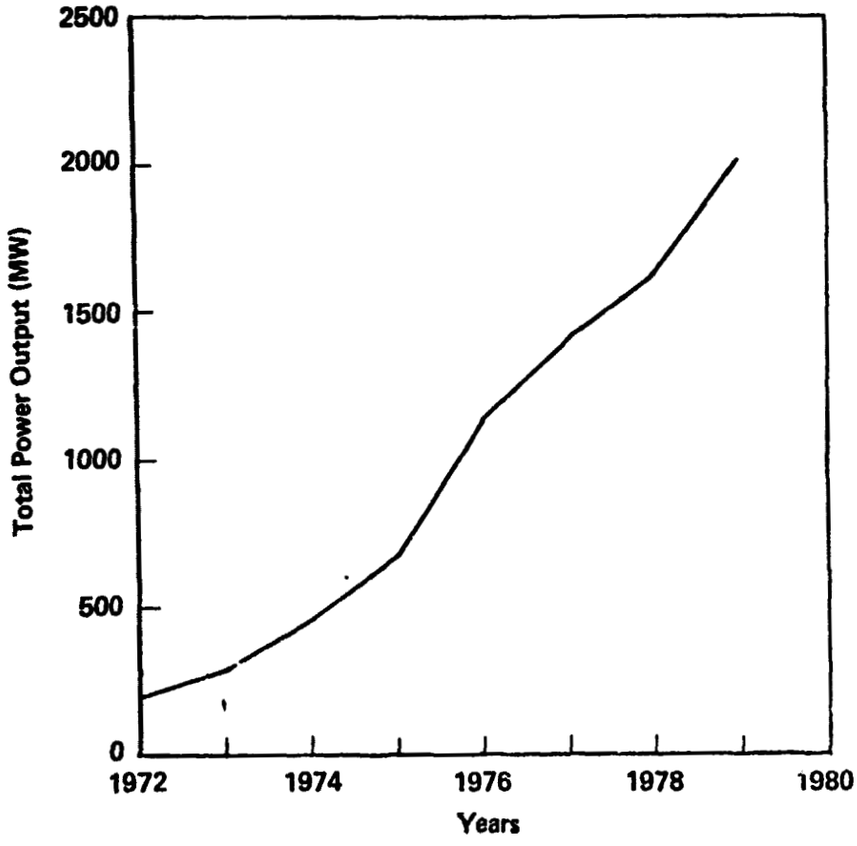

FIGURE 3.8 MICROWAVE POWER REPRESENTED BY ANNUAL U.S. MICROWAVE OVEN SALES

then bound in a matrix of epoxy material, according to the design specifications. The individual fibers are of the order of 8 microns in diameter.

There are basically three types of CF on the market today. The differences arise from the precursor materials, which are rayon, pitch and polyacrylonitrile (PAN). CF was initially produced from rayon (which has the advantage that it is a forest product, and hence a renewable resource), but the newer precursors yield a cheaper product, are easier to process, and give a higher carbon yield. The best fibers, in terms of elastic modulus, tensile strength, and reproducibility are currently produced from PAN, but it is expected that pitch will eventually be more attractive as a precursor because of its inherently lower cost, because it can be produced from coal, and because of its higher carbon yield.

There are presently 15 firms producing CF, the largest being Toray of Japan. The U.S. market is serviced by 7 firms, amongst which Union Carbide, supplied by Toray, has the largest share. The total U.S. market at present is estimated to be about 150 metric tons per year, but has been growing at an annual rate of 47% since 1974. The biggest market sector is sporting goods (where CF is used in shafts for golf clubs, ski poles, skis, fishing poles and tennis racquets), consuming about 41% of production. Aerospace applications, mostly military, use about 33%. Industrial uses, in textile and other machinery parts, x-ray equipment, sound system components, and automobiles comprise 10% of the market, and miscellaneous categories (mostly R&D) consume the remaining 16%.

Arthur D. Little, Inc., has recently carried out a CF market forecast through 1993,[20] with the results shown in Figure 3.9. Considerable changes are expected in the different market sectors. The sporting goods sector is projected to decline in its growth rate to about 20% p.a. during the next five years, and then settle down to about a 5% growth rate. The military sector of the aerospace market is expected to grow at about 25% p.a. in the near term and 15% in the long term, but civil aircraft applications should increase rapidly (about 200% p.a. in the near term and 40% p.a. in the long term), considerably outpacing the military market by 1993. Assuming the automotive market does not mushroom (see below), the industrial sector should continue at about its present rate of growth.

The total U.S. market in 1993 is projected as 5800 tons. The SPS requirements would increase the demand significantly, but there does not seem to be any major problem in expanding production to meet it.

Two major caveats should be noted with respect to these forecasts. The first is the possibility of greatly expanded usage in automobiles. The Ford Motor Company is in the process of designing a car which makes liberal use of carbon composites, as part of their light-weight vehicle program. The total mass of composite employed in the vehicle is just over 23 kg, resulting in a weight saving, compared to conventional materials, of 31 kg. The CF content in composites for automobiles is generally much lower than in aerospace applications, typically in the 20% range, so that the CF actually used in this advanced vehicle only amounts to about 5 kg. However, automobile production in the early 1990's is expected to be of the order of 15 million cars per year. It is at least possible that 10 million vehicles will be produced each year with CF content like that of the Ford design, leading to a CF market around 50,000 metric tons per year, dwarfing the SPS requirement.

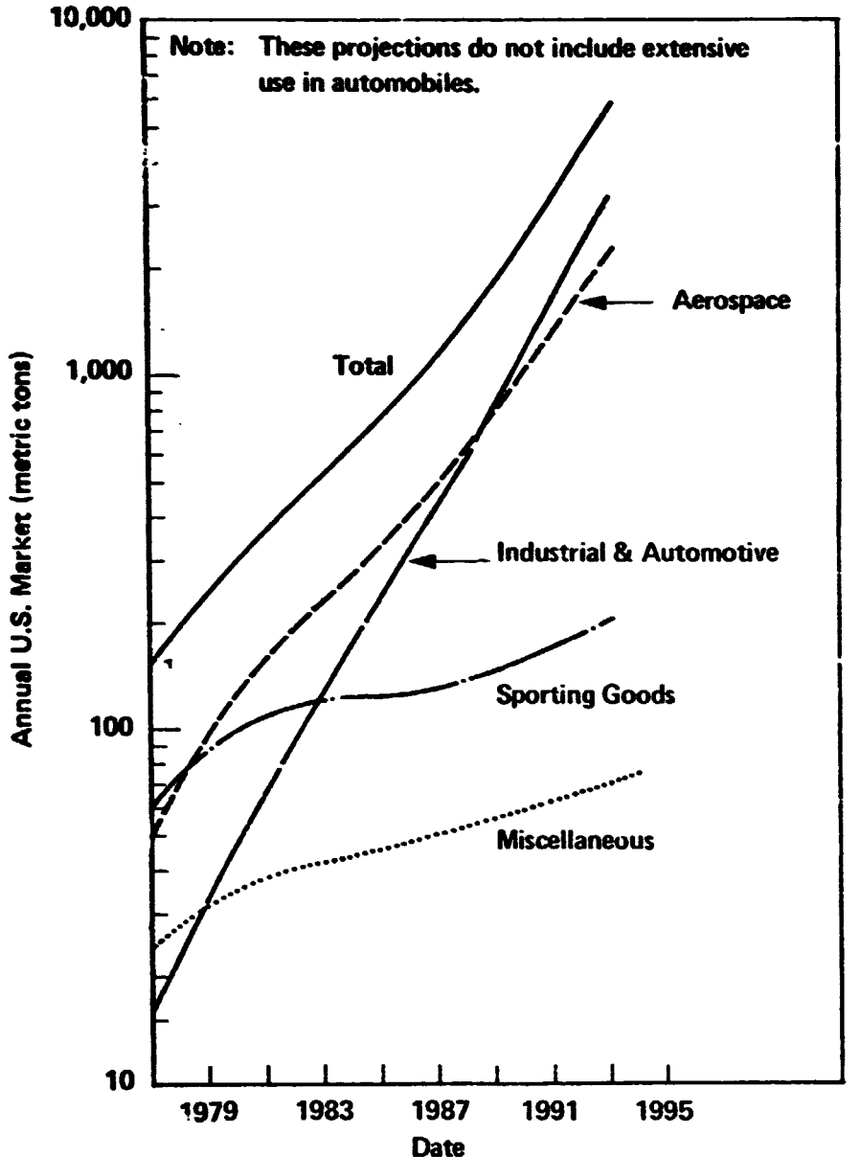

FIGURE 3.9 U.S. MARKET PROJECTIONS FOR CARBON FIBER

The other caveat is that there is a conceivable environmental hazard associated with extensive use of carbon composites. The epoxy matrix is flammable: if a composite structure is involved in a fire, it may be possible for the matrix to burn away and release the fibers into the atmosphere. The fibers are so fine that they can remain airborne for an extended period and drift a long distance downwind. If they happen to settle on electrical or electronic equipment, they can cause damage by resistive loading, short circuits, or arcing, and there is a small possibility that they can create shock hazards to users of such equipment (including domestic appliances).

The referenced Arthur D. Little study[29] included a risk analysis of the use of CF in commercial aircraft which might become involved in accidents with fire at major airports. The conclusion was that the statistical expectation of the economic loss from a single such event is orders of magnitude lower than that associated with the risks from hurricanes, mining disasters or even nuclear power plant accidents.

If carbon composites are to be used extensively in the SPS, a study is needed of hazards due to fire in the production of the fibers and on the launch pad or during boost. An additional question concerns the survivability of fibers during an aborted launch with burn-up of the payload on re-entry. If released in the stratosphere, either during boost or re-entry, the fibers could remain suspended for a very long time, probably being dispersed world-wide eventually. With wide dispersal, the risks to electrical equipment when finally they settled back to Earth would be very slight; but, while there was a relatively concentrated cloud of CF in the stratosphere, they could enter the cabin air intakes of aircraft, creating a hazard to avionic equipment. While the fibers may be too fine to be efficient scatterers of electromagnetic radiation of wavelength appropriate to their length, the possibility should also be examined that a stratospheric cloud of fibers could act as chaff, interfering with radar or communications.

Even if these hazards in the use of CF for the SPS prove negligible, it is possible that environmental concerns about other applications will lead to restrictions in the growth rate of the terrestrial market, reducing the industrial capability to meet the SPS demand.

The situation with respect to CF is thus that nominal projections for the terrestrial market lead to the conclusion that the SPS would lead to a significant but not overwhelming increase in demand. If CF is used extensively in automobiles, the SPS market may be comparatively quite small; but there is a possibility that environmental concerns will limit the terrestrial market and perhaps even preclude extensive use of CF in the SPS.

3.4 Conclusions and Summary

This preliminary analysis indicates that, as one would expect, the production of photovoltaic cells and blankets is the most significant, in terms of industrial impact, of the SPS subsystems studied. The other subsystems will undoubtedly require the development of significant new industrial enterprises, but in the cases of microwave power conversion devices and carbon composite materials, the SPS demand seems reasonably comparable with projected capacity to meet other markets; for ion engines and dipole rectifiers, the plants required may be essentially different to those in existing industries, but the scale involved is such that the capital investment in new plants would be relatively modest, in each case comparable to that required for a single major factory in industries such as consumer electronics, automobiles, or aerospace.

Because of uncertainties regarding the final design of the SPS, production engineering of novel components, and the scenario for SPS development and deployment, it is considered premature to carry out much more detailed industrial studies at this time. Instead, it is strongly recommended that production engineering studies be carried out as part of the assessment of each design alternative and used as contributors to the criteria for choice between them.

Finally, further work is needed concerning the environmental impact of the release or argon or other ions into the plasmasphere and ionosphere from ion engines, and of the accidental release of carbon fibers into the atmosphere, before commitment to these systems.

REFERENCES

1. Chapman, P.K., and Searcy, J.B.: A Proposal for an Equatorial Launch Facility, The Chippewa Corporation, Lexington, Mass., 1964.

2. Frazier, M., et al: Earthport — A Launch Pad for Industry Into Space, The Sabre Foundation, Santa Barbara, California, 1977.

3. Frazier, M., The Sabre Foundation, private communication.

4. Battin, R.H.: *Astronautical Guidance,* McGraw-Hill, NY, 1964, p. 37.

5. Woodcock, G., Boeing Aerospace Corporation, private communication.

6. Douglas-Hamilton, D.H., Riley, D., and Chapman, P.K.: Studies in Laser Propulsion, Avco Everett Research Laboratory, Inc., Everett, Mass., 1978.

APPENDIX 3.A
OPTIMIZATION OF A PLANT TO PROVIDE A GIVEN INVENTORY AT A GIVEN TIME

The total cost of producing an inventory y of product by a time t_2 is made up of three separate costs, as follows:

i) Production Cost.

The discounted present cost [(i.e., the Net Present Value (NPV)] of producing an increment dy of product at time t is given by:

$$dC_1 = \gamma_1 e^{-\beta t} \left(\frac{y}{y_1}\right)^{\alpha} dy \qquad [3.A.1]$$

where y_1 is the quantity which has been produced (for experimental or other purposes) at the time t_1 of plant start-up, α is the slope of the learning curve, in logarithmic units (e.g., $\alpha = 0.2$ for 80% learning) and β is the discount rate.

The rate of production in the dedicated plant is:

$$\begin{aligned} \dot{y} &= 0 & t &< t_1 \\ &= q & t_1 &< t < t_2 \end{aligned} \qquad [3.A.2]$$

so that, for a fixed plant production capacity, the total which has been produced to time t is:

$$y = y_1 + q(t - t_1) \qquad t_1 < t < t_2 \qquad [3.A.3]$$

and the required production capacity of the plant is

$$q = y_p/\tau \qquad [3.A.4]$$

where $\tau = t_2 - t_1$.

Substituting for t from (3.A.3), the discounted production cost is

$$\begin{aligned} C_1 &= \gamma_1 \, y_1^{\alpha} \exp{-\beta} \, [t_2 - \tau(1 + \hat{y})] \int_{y_1}^{y_1 + y_p} e^{-\beta y/q} y^{-\alpha} dy \\ &= \gamma_1 \, \hat{y}^{\alpha} \, y_p e^{-\beta t_2} \, e^{\beta\tau(1 + \hat{y})} \, E(\tau) \end{aligned} \qquad [3.A.5]$$

where $\hat{y} = y_1/y_p$ and

$$E(\tau) = \int_{\hat{y}}^{1 + \hat{y}} e^{-\beta\tau u} \, u^{-\alpha} du \qquad [3.A.6]$$

ii) Capital Cost.

The production plant must be available at time t_1 so the discounted capital cost is:

$$C_2 = \gamma_2 \, e^{-\beta (t_1 - \delta)} \, q \qquad [3.A.7]$$

where δ is the time between commitment of capital to build the plant and its readiness date. In view of uncertainties in the cost γ_2 of building a plant capable of unit production rate, δ may be neglected in this analysis.

iii) Inventory Cost.

The discounted cost of maintaining an inventory y of product for time dt at t is taken to be

$$dC_3 = \gamma_3 \, e^{-\beta t} \, y \, dt \qquad [3.A.8]$$

Assuming that only new production must be kept in inventory, the total discounted inventory cost to t_2 is then

$$C_3 = \gamma_3 q \int_{t_1}^{t_2} e^{-\beta t} (t - t_1) \, dt$$

$$= (\gamma_3 q/\beta^2) \, e^{-\beta t_2} \, (e^{\beta \tau} - 1 - \beta \tau) \qquad [3.A.9]$$

Collecting terms and substituting for q and t_1, the total cost is then

$$C = C_1 + C_2 + C_3$$

$$= \gamma_1 y_p e^{-\beta t_2} \left[\dot{y}^{\alpha} e^{\beta \tau (1 + \dot{y})} E(\tau) + \frac{T}{\tau}{}_2 \, e^{\beta \tau} + (e^{\beta \tau} - 1 - \beta \tau) / \beta^2 \tau \, T_3 \right] \qquad [3.A.10]$$

where $T_2 = \gamma_2/\gamma_1$ is the time required for the plant to produce an output equal in its nominal cost to the capital cost and $T_3 = \gamma_1/\gamma_3$ is the time span over which the cost of maintaining unit output in inventory is equal to the unit production cost.

The factor outside the brackets in (3.A.10) is the discounted cost of producing the required inventory, at initial prices, if production could be delayed until near t_2. This is a convenient normalizing factor for the total cost, allowing the results to be expressed in a form independent of t_2.

The value of τ which minimizes the total discounted cost is plotted in Figure 3.A.1 as a function of T_2, for $\dot{y} = 10^{-1}, 10^{-3}$ and 10^{-6}. In constructing these curves, it was assumed that $\alpha = 0.2$, $\beta = 0.1$ and $T_3 = 10$ years.

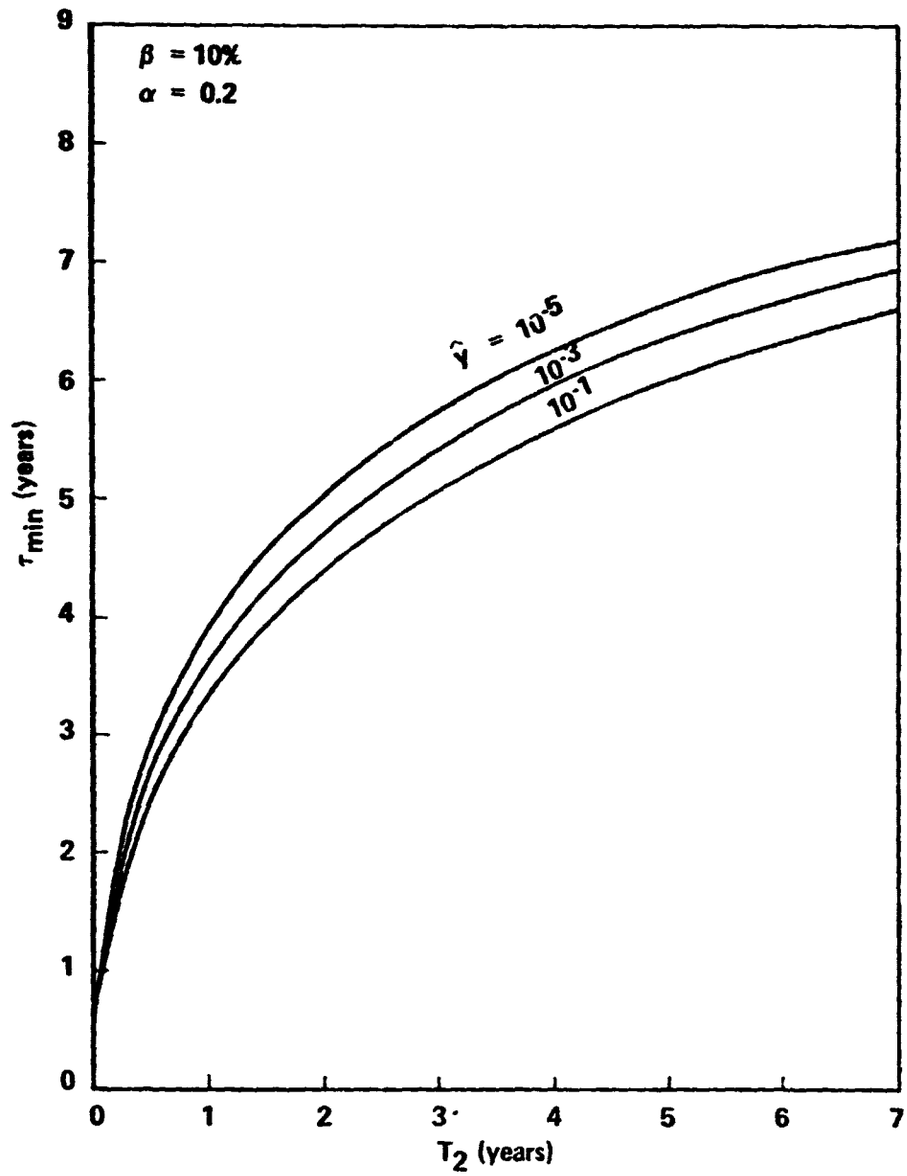

FIGURE 3.A.1 OPTIMUM START-UP DATE VS. NORMALIZED PLANT CAPITAL COST

Both the production and inventory costs C_1 and C_3 are monotonic increasing functions of τ, while the capital cost C_2 has a minimum when $\tau = 1/\beta$. As one would expect, if the plant is cheap compared to fabrication costs (i.e., T_2 is small), plant start-up should be delayed. As T_2 increases, the optimum start-up time becomes earlier, asymptotically approaching $1/\beta$ years before t_2. It is noteworthy that the optimum start-up time does not depend strongly on $\dot{y}$ (i.e., on the ratio of the total required inventory to the amount which has been produced prior to commitment to production).

The slope of these curves is relatively low for $T_2 > 2$ years: the optimum start-up date increases from about 4.5 years to 7 years before t_2 as T_2 increases from 2 to 7 years.

Figure 3.A.2 gives some examples (for $T_2 = 2$ years) of the dependence of the normalized total cost on the initial production date. The minima are quite broad. Increasing T_2 or decreasing the discount rate moves the optimum to an earlier date, but the minima become even broader. It is thus a reasonable rule of thumb that the start-up date for a plant to produce a given inventory should be approximately five years before the readiness date. However, there is considerable freedom to delay the start-up date (for example, to await development of promising technologies) or to begin sooner (for example, to reduce the impact on the production capability in a given industry), without serious increases in cost.

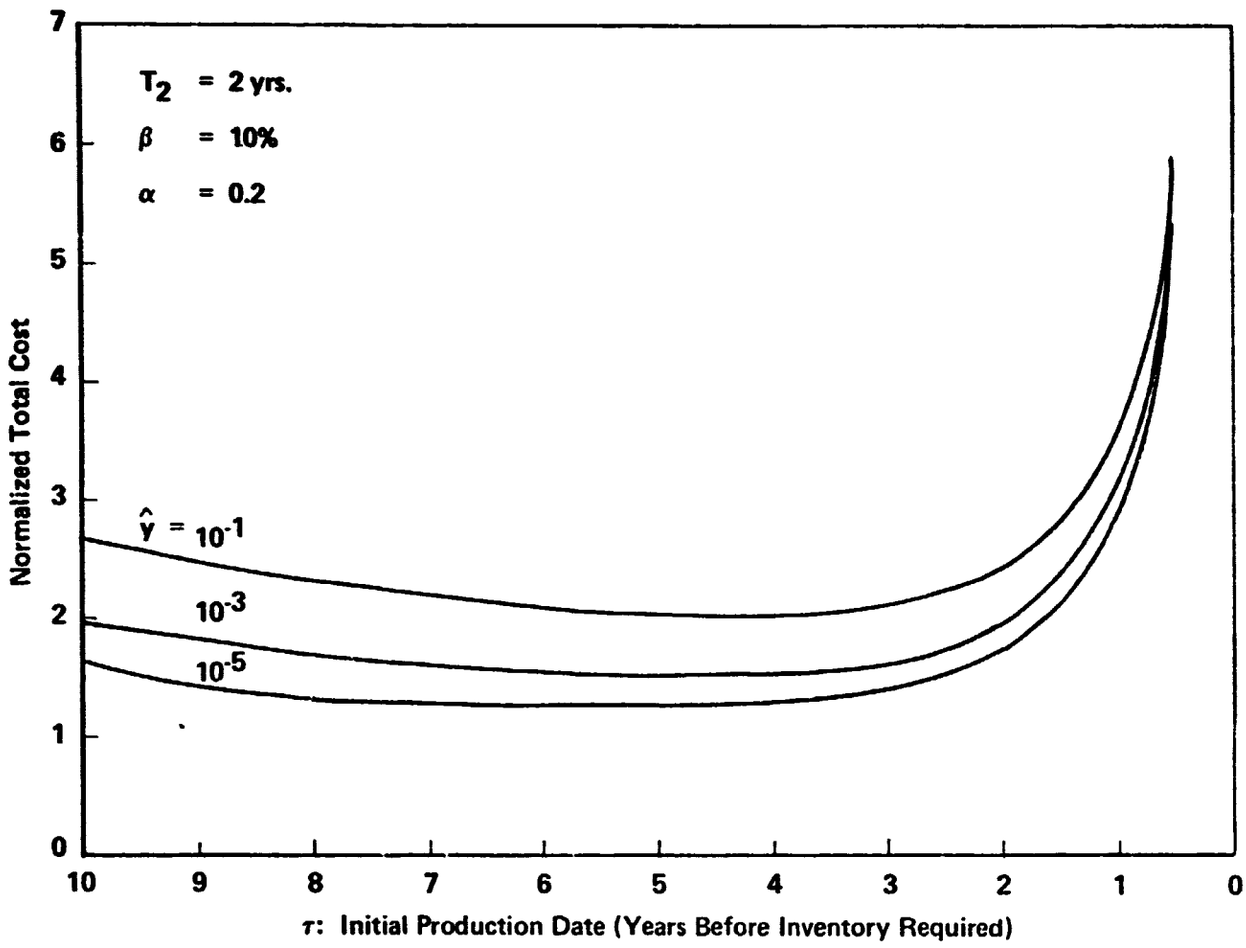

FIGURE 3.A.2 TOTAL COST VS. START-UP DATE

SECTION 4

TERRESTRIAL TRANSPORTATION ISSUES

		Page
4.1	Introduction	4-1
4.2	Domestic Transportation	4-1
4.3	Overseas Transportation	4-2
4.3.1	Sear Route Distances and Transportation Costs	4-5
4.3.2	Advantages of Low-Latitude Sites	4-7
4.3.3	Ranking of Potential Low-Latitude Launch Sites	4-11
4.3.4	Conclusions	4-16
4.4	References	4-16

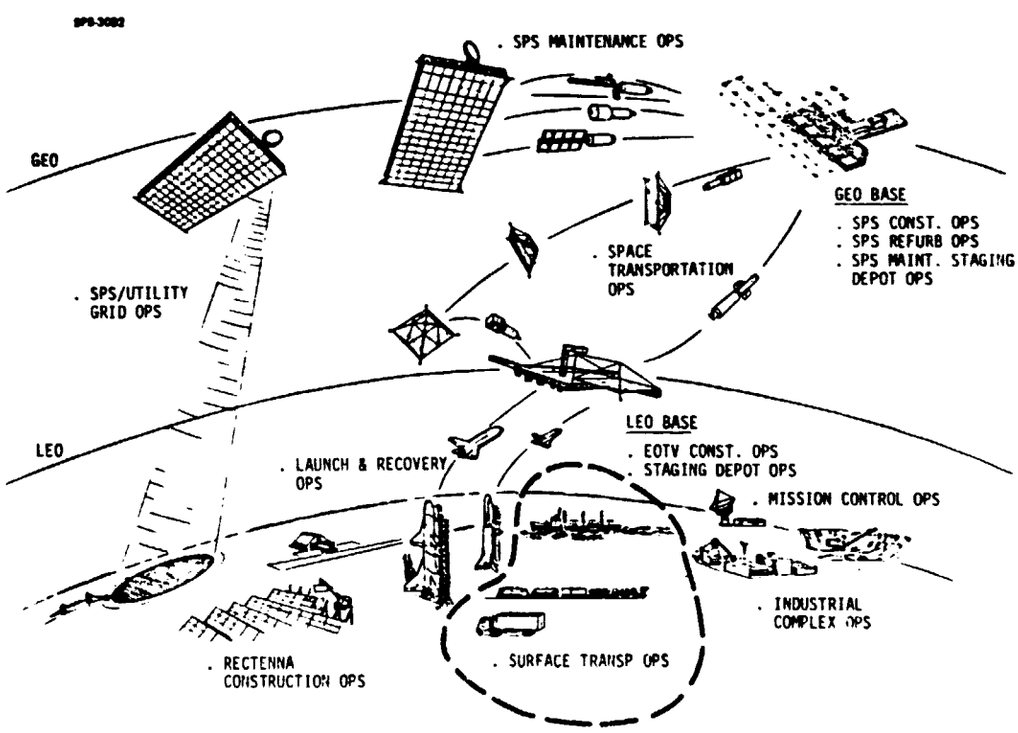

4.0 TERRESTRIAL TRANSPORTATION ISSUES

4.1 Introduction

The scale and characteristics of the Solar Power Satellite require that much more attention be paid to problems of logistics than in previous space projects. The choices made in connection with fabrication of the components of the SPS (and of the launch vehicles, fuel, etc.), warehousing, inspection and transportation to the launch site may have a significant effect, not only on the cost of the system, but on decisions which are fundamental to the SPS systems design (for example, the choice between LEO and GEO assembly). As the cost of launch to orbit is reduced, the costs of terrestrial transportation become relatively more important; as the cost of space hardware is reduced, means for reducing handling and inspection costs must be found. On the other hand, the total required investment and the necessary lead time before the SPS can be operational are such that it may be cost-effective to construct new factories, launch facilities, etc., optimized for the SPS, rather than relying on existing institutions.

4.2 Domestic Transportation

Table 4.1 gives a breakdown of the materials which must be transported to the launch site to support an SPS build-up rate of 10 GW per year, which implies 417 launches of the Heavy-Lift Launch Vehicle (HLLV) each year. There are, of course, a wide variety of additional materials (e.g., components for refurbishment of the HLLV to allow 300 flights/vehicle) which must be shipped to the launch site, but their mass is expected to be very small compared to those shown in the table.

TABLE 4.1

TRANSPORTATION TO LAUNCH SITE

Item	Unit Mass	Number/Year	Mass/Year
Launch Vehicle	1413	1.4*	1965
Payload	424	417	176,800
Booster Fuel (LCH_H)	1709	417	712,653
Booster Oxidizer (LO_2)**	5127	417	–
Orbiter Fuel (LH_2)	329	417	137,193
Orbiter Oxidizer (LO_2)**	1976	417	–

*300 Flights/vehicle
**Assumed made at launch site

To provide a preliminary estimate of the terrestrial transportation requirements and costs, it is assumed here that the freight mode is by rail. It should be noted that, unless the HLLV is assembled at the launch site, some other mode (e.g., barge) must be used to bring it to the site, because of its large size; but the costs incurred are unlikely to be higher than those in rail freight. For the launch vehicle, payload and LH_2, it is assumed that a freight car can carry 25 metric tons,* but tank cars for LCH_4 are assumed to carry 100 tons. This leads to a total of 19765 freight cars per year, or about 54 per day.

*These figures were obtained by querying rail freight forwarders.

The transportation requirements are thus equivalent to one freight train every one to two days. It is clear that this does not constitute a serious increase in the utilization of the national rail freight system.

The cost of rail freight, of course, depends on the distance from the point of origin to the launch site. For a reasonable upper bound, it may be assumed that the average distance is of the order of 3500 km. The cost of rail freight over this distance depends somewhat on the type of car used and on any special handling requirements (e.g., for LH_2 and for fragile components such as the photovoltaic arrays), but averages about $3000 per car (1979 dollars). The estimated cost of transportation to the launch site is thus $59.3 million per year (or $6/kw of installed capacity).

This rough estimate is sufficient to show that transportation costs to the launch site, while not entirely negligible, are likely to be a minor component of overall costs. A more detailed analysis, taking into account economics of scale and optimizing the freight mode for each material carried, would almost certainly lead to lower costs. Moreover, the costs may be reduced by locating some production facilities (especially that for producing booster fuel) closer to the launch site.

The cost of transportation of materials to rectenna sites may be a more significant factor than that to the launch site. Each 5 GW rectenna may require delivery of about 4 million tons of materials, most of which will be concrete. At 150 tons per freight car, this requires 27000 carloads at each of the two rectenna sites required to support the assumed build-up, or 73/day. On average, about one freight train must arrive at the site each day. Since rectennas may be located anywhere in the nation, it is not possible to minimize freight costs by locating the plant for production of specialized rectenna components near the site; but the concrete which makes up most of the mass requirements can probably be obtained from suppliers within a reasonable distance (e.g., 1000 km). It is therefore estimated that the freight costs for rectennas may be of the order of $1500 per car, leading to a total freight cost (for two rectennas) of about $80 million.

At an average speed of 70 km/hr, with allowance for loading and unloading, the round-trip time for each car transporting freight to the launch site may be about 6 days, and about 3 days for freight to the rectenna sites. This leads to a total number of 769 cars needed to support the terrestrial transportation for both launch and rectenna construction, again showing that the impact on the rail transportation system will be modest.

4.3 Overseas Transportation

The above analysis was predicated on the assumption that the launch site and the SPS production facilities are within the continental United States (CONUS). However, it is quite probable that some SPS components will be manufactured elsewhere (e.g., Japan or Europe). Moreover, the scale of the SPS project is quite sufficient to justify construction of a new, dedicated launch site and associated facilities; and it may be desirable to locate such a facility at low latitude, for the reasons discussed in 4.3.2, below.

In order to scope the overseas transportation problem, a preliminary analysis was undertaken of the costs of transportation to potential launch sites at low latitudes. The primary objective was to determine whether the benefits to be obtained from low-latitude launch would be sufficient to offset the additional costs and difficulties which would be incurred in launch from a

site remote from the areas where most SPS components would most probably be manufactured. This analysis is restricted to transportation to the launch site, because it is assumed that rectennas will generally be manufactured from local materials.

There have been several studies to date of possible low-latitude launch sites.[1,2] Launch facilities exist at the Kouru range in French Guiana, the San Marco platform (Italian) off the coast of Kenya, the Thumba sounding rocket site in India, and the range in Zaire* belonging to the West German company OTRAG. None of these facilities are in any way sufficient to support a program of the magnitude of the SPS.

The search for potential low-latitude sites may be greatly simplified by imposing the following simple conditions: (i) The site should be as close to the equator as possible, certainly within 10° latitude (the penalty in launch vehicle performance due to latitude is discussed below). (ii) There should be an extensive region to the east which is essentially uninhabited, where the sonic footprint of the booster and perhaps spent stages may fall. (iii) The site should be on or near a seacoast with good harbor facilities. As shown by the map (Figure 4.1), there are basically six areas meeting these requirements:

1. East Coast, South America: Venezuela, Guyana, Surinam, French Guiana or Brazil.
2. West Africa: A vehicle launched due east from Cape Palmas, Liberia, would be over water for about 1800 km before reaching the Cameroon coast; and Cape Three Points in Ghana affords about 750 km over water to the Nigerian coast. All other sites in West Africa require overland launches.
3. East Africa: Somali Republic, Kenya or Tanzania.
4. India, on the coast south of Madras, or on the eastern coast of Sri Lanka.
5. Far East: Malaysia, Indonesia, Philippines (Mindanao), Papua New Guinea, or perhaps Australia (Cape York).
6. West Coast, South America: Colombia, Ecuador or Peru. All sites in this area require launch over the Andes and the Amazon basin, which is very sparsely inhabited.

In addition to these sites, there are a number of oceanic islands which might be considered:

7. Indian Ocean: Seychelles, Chagos Archipelago (Diego Garcia), and the Maldives.
8. Pacific Ocean: Bismark Archipelago (New Ireland), Solomons, Carolines, Marshalls, Gilberts, Nauru, Christmas Island, Galapagos Islands, and many others, mostly small.

There are no suitable islands in the Atlantic Ocean.

Finally, a floating launch facility could be built and located wherever is convenient, in international waters.

Although most equatorial nations may be classed as less developed or emerging countries, there are of course substantial differences between them, in the political climate, industrial base,

* This range may be abandoned.

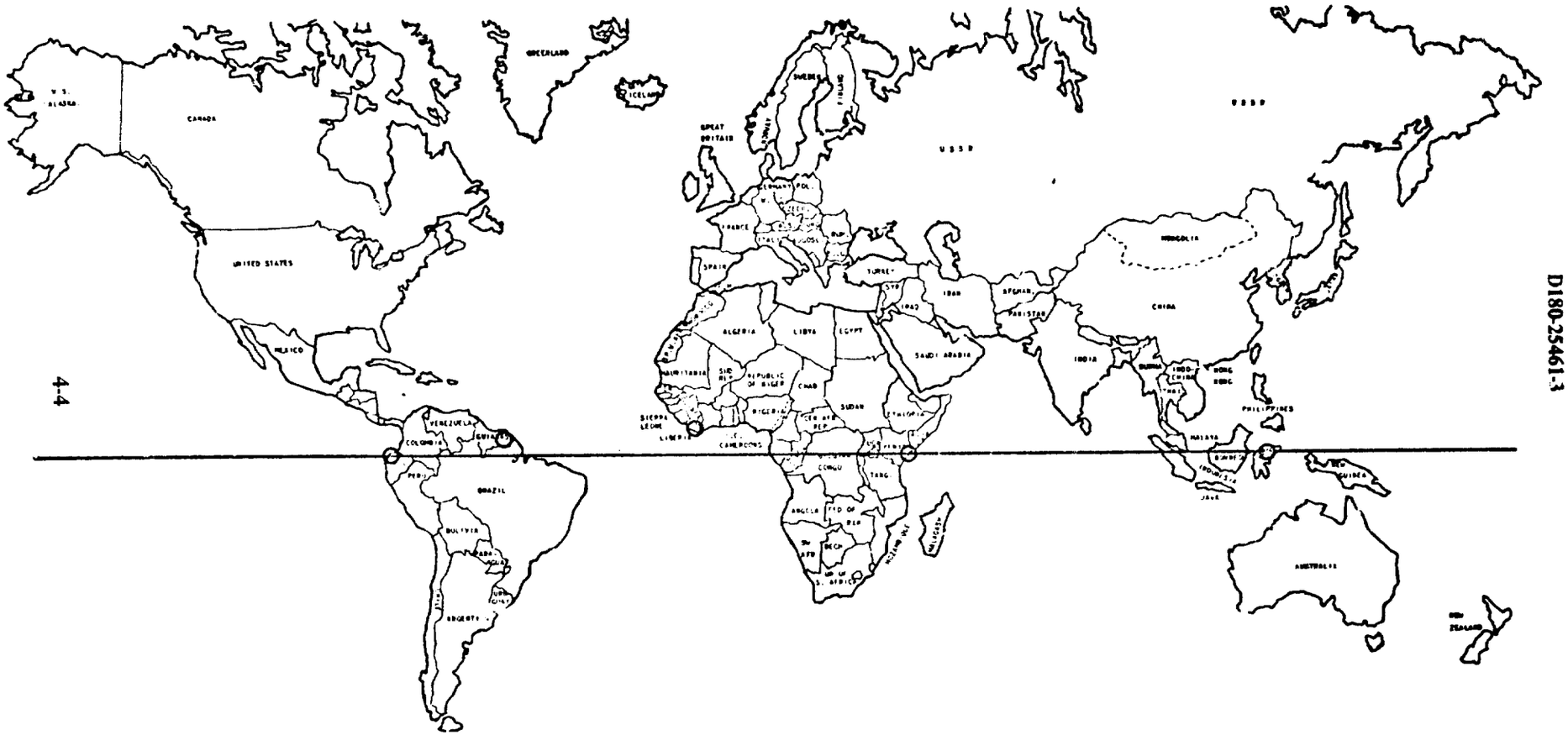

FIGURE 4.1 POSSIBLE LOW-LATI ..DE LA.. H SITES

gross national product, population, level of education, culture, etc., all of which should be taken into account in choosing a potential launch site. In the present study, however, the focus of interest was launch site logistics (in particular, terrestrial transportation costs): the objective is not to recommend an equatorial launch site, but to find out whether the probable costs incurred by operations at such sites exceed the benefits. For these purposes, it is sufficient to choose, more or less arbitrarily, a particular nation in each of the restricted geographical areas listed above. To make the comparison definite, the following nations were therefore considered:

1. French Guiana, because of the existing French range.
2. Liberia, which has a longer overwater range than Ghana, and which has expressed interest[3] in setting aside an area as a possible spaceport.
3. Kenya, because of the existing San Marco facility.
4. Sri Lanka, which has a latitude advantage over India.
5. Indonesia, which has been investigating the feasibility of a launch site on Sulawesi (Celebes).[3]
6. Ecuador.

4.3.1 Sea Route Distances and Transportation Costs

In order to compare transportation costs, sea route distances to major ports in the above nations were calculated from New York City, Los Angeles, London and Tokyo. These ports were taken as representative transshipment points for SPS components from factories in the eastern and western United States, Europe and Japan, respectively. The Suez and Panama Canals were used to minimize distances, wherever appropriate.

The results are shown in Figure 4.2. From the present point of view, the South American sites appear to be preferable if the SPS factories are in the United States or Western Europe, with Ecuador providing the best compromise if a substantial fraction of the freight to the launch site comes from Japan.

It is not easy to obtain a reliable estimate of shipping costs over these distances without a detailed breakdown of the cargo. Freight costs depend on the mass and volume of the cargo, special handling procedures which may be needed, the value of and probability of damage to the items shipped, and several other factors. Even though, for the SPS, a dedicated transport fleet may be assumed, the cost will not be accurately proportional to the distance, in part because of fixed turnaround costs. For preliminary comparisons, however, the following simple cost model was used:

$$C = (k_1 + k_2/v)x \qquad [4.1]$$

where C is the cost of shipping for a single 5 GW SPS, k_1 is the direct cost/km, v is the average speed (in km/h) of the transport, k_2 is the revenue which would be obtained from one hour of operation of the SPS, and x is the shipping distance in kilometers. The second term in this equation represents revenues lost because the time spent in transit from the factory to the launch site delays initial operation of the SPS — in other words, it assumes that terrestrial transportation lies on the critical path in the PERT chart governing launch and assembly of the system. This assumption will probably be true for an efficient operation, with minimum movements in and out of warehouses.

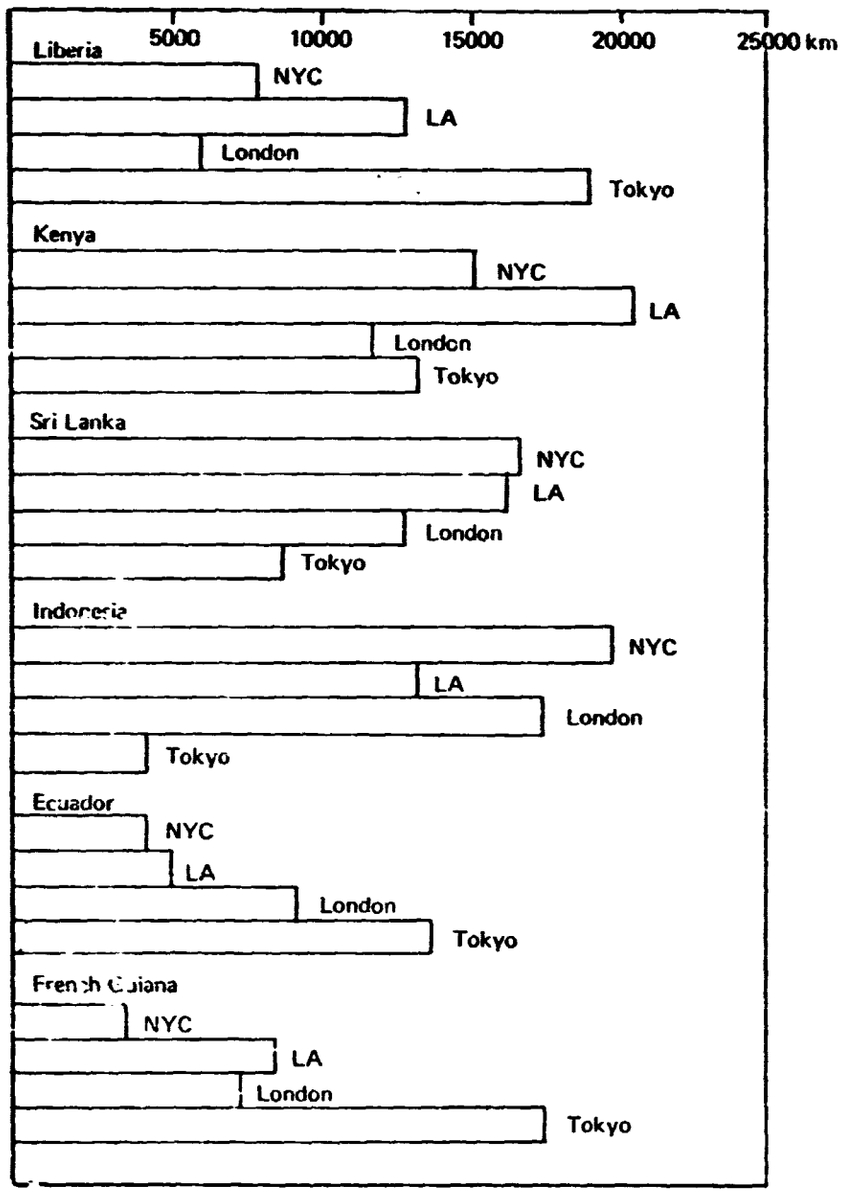

FIGURE 4.2 SEA ROUTE DISTANCES

Some of the materials required for the SPS (especially propellants) may be obtained from sources close to the launch site. It is therefore assumed that 50,000 tons must be shipped for each 5 GW SPS.

Estimates of the costs of shipment by sea and by air are given in Table 4.2 and the cost as a function of distance is shown in Figure 4.3. It is interesting to note that, for shipment by sea, lost revenues due to the time in transit are the dominant cost, and that it may be cheaper to ship by air to closer sites than by sea to distant ones.

TABLE 4.2

SHIPPING COSTS

	Sea	Air
Mass to be shipped	50,000 metric tons	50,000 metric tons
Average density of cargo	0.3 gm/cm^3	N/A
Shipping cost	\$0.016/m^3/km*	\$0.27/ton/km**
Average speed	28 km/hr	830 km/hr
SPS revenues (5×10^6 kwh/hr @ 3¢/kwh)	\$150,000/hr	\$150,000/hr
k_1	\$2670/km	\$13,500/km
k_2/v	\$5360/km	\$181/km
$(k_1 + k_2/v)$	\$8030/km	\$13,700/km

* This figure is an average of quotes from shippers for long-haul sea freight of machinery in quantity. If the cargo has a density much less than that of water, the cost typically depends on the volume rather than the mass.

**This figure was obtained from quoted prices for bulk air freight from New York City to Rio de Janeiro.

The shipping costs obtained from this simple model are only of order \$10/kw, a small component of the overall SPS cost. A more accurate model would thus be of doubtful utility at the present stage of development of the system. The absolute costs for shipment of each SPS to a low-altitude site are however of order \$100 million, so that optimization of shipping may be worthwhile, in absolute terms, even if it is relatively unimportant to the final cost of energy delivered by the system.

It is possible that the total cost of shipment might be minimized by using a freight mode which is faster than a ship but slower than an aircraft. If it were decided to use a low-latitude launch site for the SPS, the possibilities of employing hovercraft, hydrofoils or dirigibles for shipment should be investigated.

4.3.2 Advantages of Low-Latitude Sites

Even if the SPS is assembled in geosynchronous orbit (GEO), there will be a requirement for a manned facility in low orbit (LEO), providing warehousing and transshipment to the electric orbital transfer vehicle (EOTV) of cargo from Earth, refuelling of the EOTV and other OTV's, etc. It is highly desirable that this facility be in equatorial orbit, in order to avoid the radiation shielding required if the orbit penetrates the South Atlantic Anomaly. Moreover, from a given launch site the launch window to an inclined LEO opens twice per day, at most. Launch to

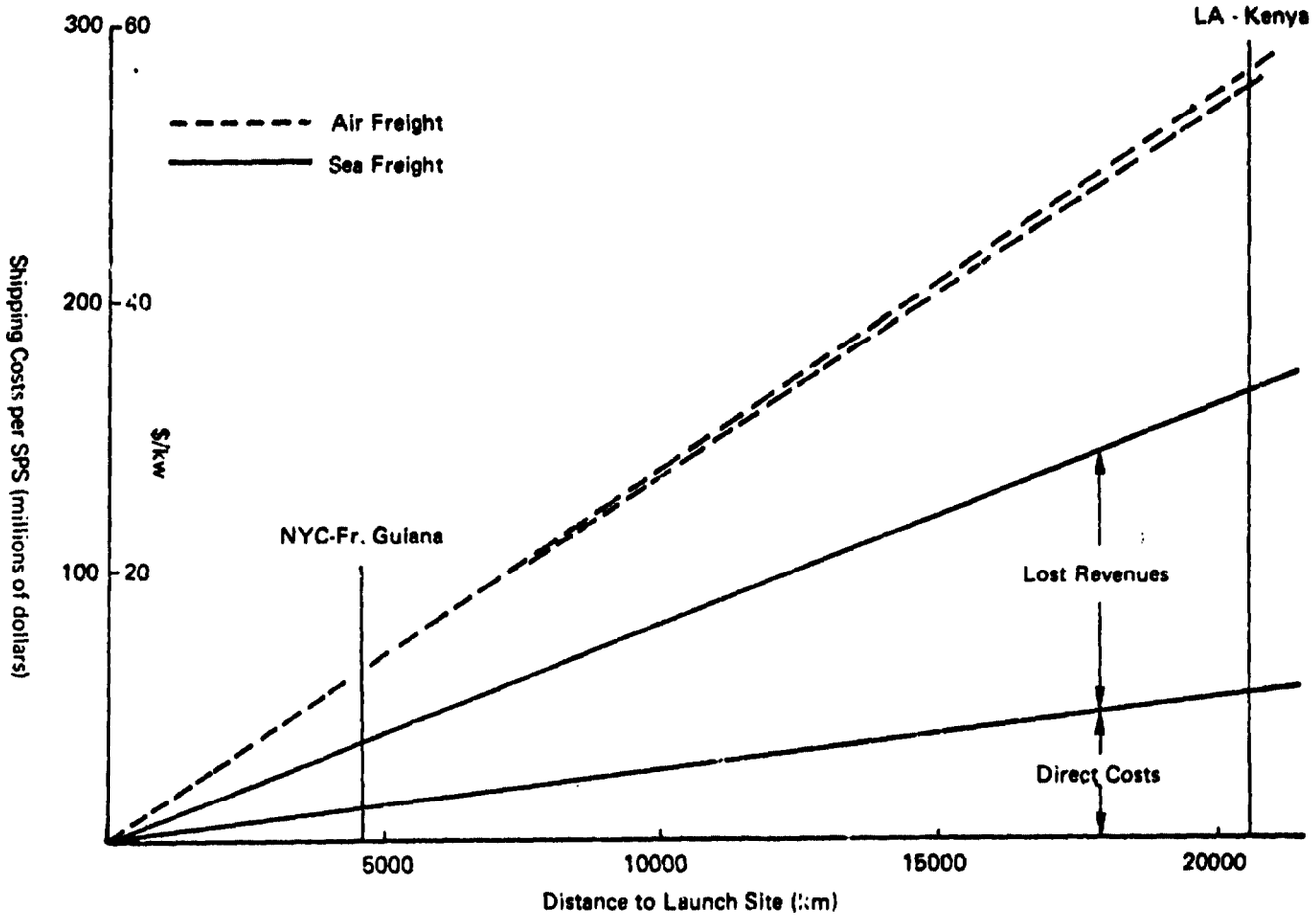

FIGURE 4.3 TRANSPORTATION COSTS

equatorial LEO from a site at latitude L requires a plane change through an angle L at the equator, and generally a phasing maneuver as well for rendezvous with the SPS facility (so as to avoid launch window restrictions).

The ΔV required for the plane change is easily seen to be

$$\Delta V = 2v_1 \sin \frac{1}{2} L \simeq v_1 L \qquad [4.2]$$

where L is in radians. The approximation given is accurate within about one percent for $L < 30°$. The expression is valid for orbits at any altitude with circular velocity v_1.

If the plane change is required, the upper stage of the launch vehicle must carry additional propellants. For a given booster, the burnout mass is reduced by the plane-change mass ratio

$$R = \exp(\Delta V/c) \qquad [4.3]$$

where c is the exhaust velocity.

Assuming the upper stage uses LOX/LH_2 (with a vacuum specific impulse $I_{sp} \simeq 420$ seconds), the expression [4.3] is plotted in Figure 4.4, as a function of the launch site latitude. The orbit altitude is taken to be 500 km, so that $v_1 = 7.62$ km/sec. The mass ratio penalty for launch to equatorial LEO can be quite substantial, amounting to a factor of 2.5 at L = 28.5° (KSC).

The effect on launch costs per unit mass will actually be larger than is shown in the figure, because of the cost of additional propellants and, more importantly because part of the burnout mass must be used for additional structure, especially tankage. Furthermore, if the upper stage is reusable, it must deorbit to an equatorial recovery area, or else have the capability of changing planes again when empty, so as to pass over the launch site. In practice, it may be necessary to use a separate kick stage for the plane change maneuvers, further increasing costs and complicating reusability.

It is interesting to compare the ΔV for LEO plane change, Eq. [4.2], with that for ascent to GEO. If the vehicle is initially in a circular orbit of radius r_1 and inclination L, the velocity increment required to inject to a transfer ellipse with apogee at geosynchronous radius r_s, without plane change, is given by the vis viva integral[4] as

$$\Delta V_1 = v_1 \left[\left(\frac{2r_s}{r_1 + r_s} \right)^{1/2} - 1 \right] \qquad [4.4]$$

The velocity at apogee is then

$$v_a = v_1 r_1 \left(\frac{2}{r_s(r_1 + r_s)} \right)^{1/2} \qquad [4.5]$$

and the velocity increment from the "kick in the apogee" to change plane and circularize in equatorial GEO is given by

$$(\Delta V_2)^2 = v_a^2 + v_s^2 - 2v_a v_s \cos L \qquad [4.6]$$

where $v_s = v_1(r_1/r_s)^{1/2}$ is the GEO circular velocity.

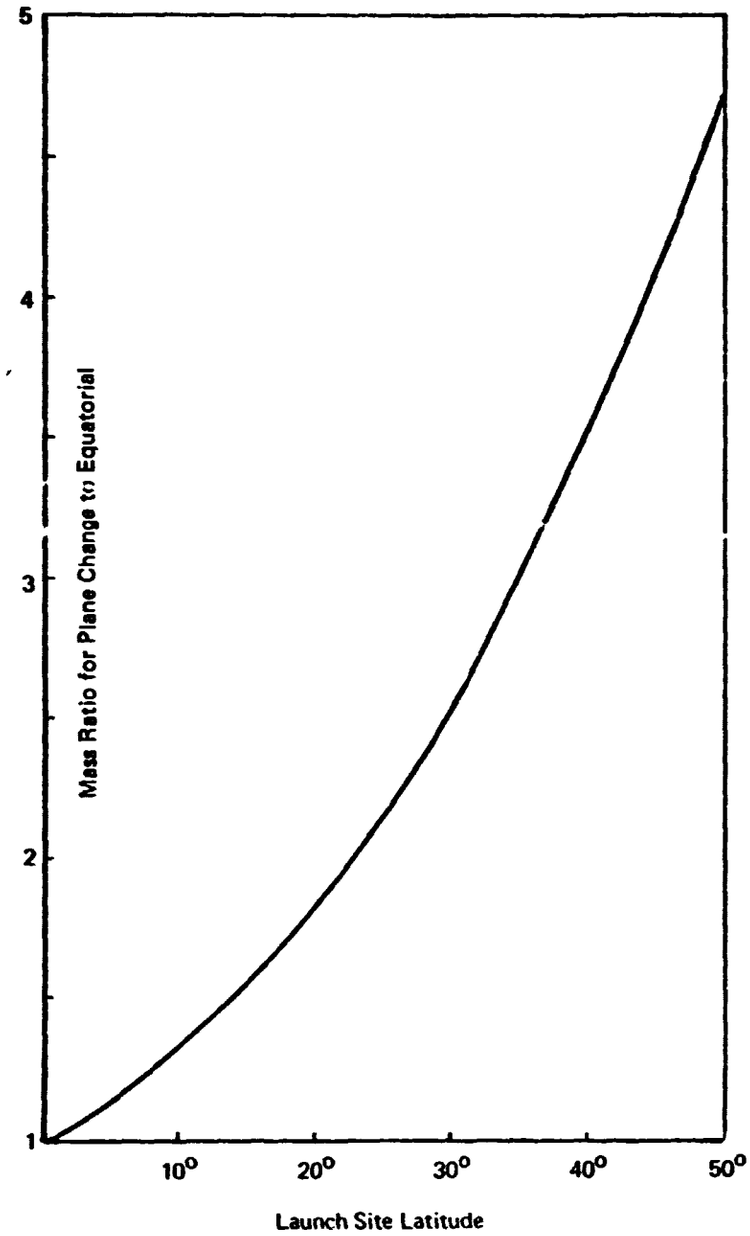

FIGURE 4.4 LEO PLANE – CHANGE PENALTY

The total velocity increment ($\Delta V_1 + \Delta V_2$) for this maneuver is plotted in Figure 4.5, along with the LEO plane-change ΔV, assuming that the altitude of the initial orbit is 500 km. The surprising fact is that, if $L > 32°$, it is cheaper to make a direct ascent to equatorial GEO than it is to stay in LEO and merely change the orbital plane to equatorial.

The conclusion to be drawn from this analysis is that launch from KSC to a staging base in equatorial LEO, with subsequent low-thrust transfer to GEO, is not a practical approach to construction of the SPS. Direct ascent from KSC to GEO, with no facilities in LEO, provides performance advantages, but a third chemical stage for the HLLV would be needed in either case. If launch must be from KSC (or other high-latitude site), the best approach is probably to use a staging base in LEO at an inclination equal to the latitude, accepting the radiation shielding penalties and launch window restrictions which this implies. The benefits of equatorial LEO are obtainable only with a low-latitude launch site.

One other possible advantage of a staging base in equatorial LEO is that the ΔV requirements (defined as the time integral of the acceleration due to thrust) for low-thrust transfer to GEO are somewhat reduced, because no plane change is involved. Calculation of the variation of this parameter with the inclination of the initial orbit requires specification of the thrust vector program, but the curve will be similar to that shown for ascent to GEO in Figure 4.5 (the figure refers to impulsive transfer, and the low-thrust values will be somewhat higher). For an ion engine of given I_{sp}, reduction in ΔV can lead to a reduced transfer time or reduced power levels as well as reduced propellant requirements.

For a solar EOTV, however, trajectory studies have shown[5] that increased occultation of the sun by the Earth in equatorial low-thrust transfer may offset the ΔV reductions by reducing the average available power. The total nightside time in a spiral low-thrust orbit clearly depends on the orientation of the orbital plane to the ecliptic, not the equator: it is possible that, near the northern summer solstice, a vehicle launched from KSC would experience more shadowing than one in a similar but equatorial orbit.

4.3.3 Ranking of Potential Low-Latitude Launch Sites

The six potential launch sites listed at the end of Section 4.2 have been compared so far only on the basis of the sea route distances and shipping costs to them from the United States, Europe and Japan. Although these characteristics are of primary concern in the present study, it would not be appropriate to form opinions about the relative merits of these areas on the basis of these data alone. This Section therefore presents several other types of data about each site. In the following paragraphs, the number in parentheses following each site is a tentative ranking of the site in comparison to the others, with respect to the characteristic under discussion, with the lowest ranking assigned to the best site. Where there are little grounds for choosing between sites, they are given the same ranking.

I. Existing Launch Facilities

1. French Guiana (1): The Kouru range is the best developed equatorial launch facility.
2. Liberia (3): No existing launch facilities.
3. Kenya (2): The San Marco platform.

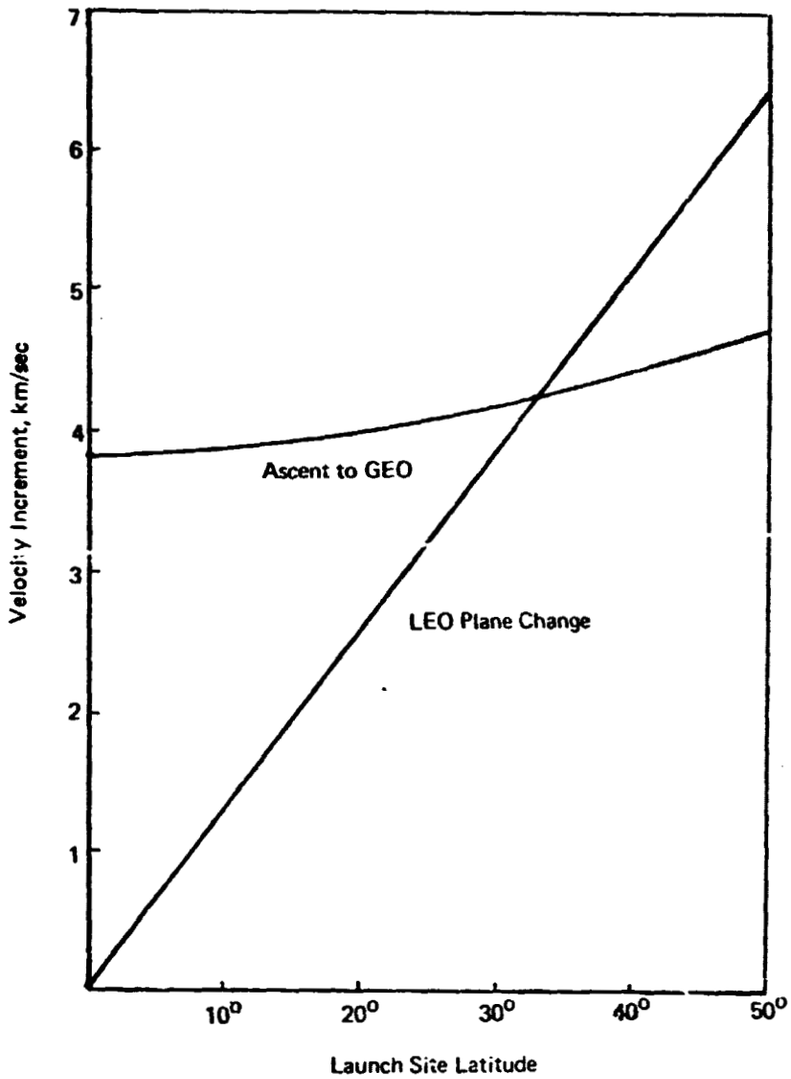

FIGURE 4.5 LEO PLANE CHANGES AND ASCENT TO GEO

4. Sri Lanka (3): No existing facilities.
5. Indonesia (3): No existing facilities.
6. Ecuador (3): No existing facilities.

II. Over Water Range, East

1. French Guiana (1): 7000 km.
2. Liberia (2): 1800 km.
3. Kenya (1): 6700 km.
4. Sri Lanka (2): 1500 km.
5. Indonesia (1): 17,800 km (some islands).
6. Ecuador (3): None (Andes and Amazon basin).

III. Available Launch Azimuths

1. French Guiana (1): 0° to 135°.
2. Liberia (1): 90° to >180°.
3. Kenya (1): 45° to 180°.
4. Sri Lanka (2): 0° to 180°, but limited overwater range to northeast.
5. Indonesia (2): 0° to 180°, but range limited by islands in some directions, and by Australia (but sparsely inhabited areas) to southeast.
6. Ecuador (3): Easterly azimuths probably limited to narrow corridor. Polar orbits (south) also possible.

This characteristic is not of great significance directly to the SPS, but it may affect the utility of the site for other missions and hence limit cost-sharing possibilities.

IV. Access to Oil and Gas Fields and Refinery Facilities. Assuming that petroleum-based hydrocarbons (kerosene, LNG, etc.), are used as fuel in the first stage of the HLLV, the equivalent of several million barrels of oil will be required annually to support the SPS build-up scenario. If a deepwater port is available, this fuel could be imported by tanker at acceptable cost. However, if LH_2 is used as fuel in the upper stage of the HLLV, several tens of thousands of tons of hydrogen will be required annually. Liquid hydrogen has a very low density (0.07 gm/cm^3) and requires specially designed equipment to handle it in quantity. It would be possible to manufacture it on site by electrolysis of water, but a pipeline to a nearby oil and gas field, where it can be obtained cheaply, would be highly desirable.

1. French Guiana (5): Venezuela (c.2000 km) is the closest major source.
2. Liberia (4): Nigeria (c.1300 km) is the closest source.
3. Kenya (3): Indigenous refinery facilities, limited surplus.
4. Sri Lanka (6): Import probably required.
5. Indonesia (2): Indigenous (Borneo, across Makassar Straits from Sulawesi).
6. Ecuador (1): Indigenous, ample reserves.

For French Guiana and Liberia, pipelines from oil fields across intervening nations may cause problems.

V. Availability of Downrange Tracking Sites (Boost Phase)

1. French Guiana (4): Poor; ship probably required.
2. Liberia (1): Excellent.
3. Kenya (3): Fair; ship or Amirante Islands.
4. Sri Lanka (5): Poor; ship required.
5. Indonsia (1): Excellent.
6. Ecuador (2): Good, although mountain and jungle terrain may cause difficulties.

VI. National Statistics: Wealth and Education. Table 4.3 gives some statistics which are intended to be representative of the industrial base and availability of skilled labor in the six equatorial areas. For comparison, figures for France and the United States are included. Although the discrepancy between the advanced and emerging nations is of course very pronounced, care is needed in interpreting the average values given. For example, the emerging nations generally have much higher birthrates than the advanced countries, which means that a higher percentage of their populations are of school age; if adjusted for this effect, the difference between the education levels would be even more pronounced. On the other hand, especially in larger nations, a low value of the GNP per capita does not preclude the existence of a substantial class of educated and relatively affluent people who could provide skilled workers at a launch site. The rankings given to the various sites thus involve a considerable amount of judgment.

VII. Climate: Availability of High Mountains. Climate can have a strong effect on the desirability of a launch site, affecting operations there and influencing personnel changeovers. Mountains in the area modify the climate and provide attractive areas for vacations etc. In addition, there is a possibility that high mountains may eventually prove of significance to launch technology; in particular, a launch site for boosters employing laser propulsion[6] must be above the freezing level (at least, if CO_2 lasers are used).

1. Ecuador (1): Rainfall 40-60 in./yr, depending on elevation. Cool summers, mild winters. Mountain elevations to 6000 meters.
2. French Guiana (4): Rainfall 120 in./yr, hot and rainy all year, near sea level.
3. Liberia (4): Rainfall 100 in./yr, mostly hot and rainy, near sea level.
4. Kenya (2): Rainfall 50 in./yr, hot all year but short rainy season. Mt. Kenya (5200 m) and Mt. Kilimanjaro (5900 m) nearby.
5. Sri Lanka (3): Rainfall 40 in./yr, hot all year but fairly short rainy season. Maximum elevation 2600 m.
6. Indonesia (4): Rainfall 120 in./yr, mostly hot and rainy, near sea level. Nearest mountains on Borneo, to 4000 m, and in West Irian, to 5000 m.

TABLE 4.3

SELECTED NATIONAL STATISTICS

Nation	Ranking	Population (millions)	GNP $U.S.[1] (billions)	GNP Per Capita $U.S.	Education[2]
Brazil[3]	1	107.1	41.9	391	5.0
Liberia	6	1.75	0.64	363	1.7
Kenya	5	13.4	2.17	162	1.8
Sri Lanka	4	13.6	2.41	177	3.8
Indonesia[4]	3	138.1	22.5	163	2.0
Ecuador	2	6.7	3.5	516	4.6
France	-	52.9	269.3	5090	8.9
U.S.		215.1	1516.3	7048	11.4

1. Converted from local currency at free exchange rate (1976 data).
2. This is the percentage of the population which is enrolled in secondary and tertiary education.
3. French Guiana is an overseas département of France, with a population of only 55,000. Brazil is a more likely source of personnel.
4. Although Indonesia's per capita GNP is low, the country is large enough to have significant industrial resources. Singapore and perhaps Australia are sources of skilled workers.

The rankings obtained with respect to these various characteristics are tabulated in Table 4.4, along with a ranking on sea route distance, from Figure 4.2. These data of course do not provide an unequivocal basis for choosing the "best" equatorial site, which clearly depends on the weight given to the different characteristics. Moreover, the analysis here can be regarded only as a preliminary cut at the site-selection problem, and many important factors (e.g., the political climate) have been ignored entirely. Nevertheless, it does appear that the South American sites are generally preferable, with the West Coast sites (Ecuador, Colombia, or Peru) preferred if it proves acceptable to launch over the Andes and the Amazon basin.

TABLE 4.4

TENTATIVE LAUNCH SITE RANKINGS

	French Guiana	Liberia	Kenya	Sri Lanka	Indonesia	Ecuador
Existing launch facilities	1	3	2	3	3	3
Overwater range, east	1	2	1	2	1	3
Available launch azimuths	1	1	1	2	2	3
Access to oil/gas fields	5	4	3	6	2	1
Downrange tracking sites	4	1	3	5	1	2
National statistics	1*	6	5	4	3	2
Climate; high mountains	4	4	2	3	4	1
Sea route distance	2	3	6	4	5	1

*Brazil

4.3.4 Conclusions

The analysis presented in this section leads to the following conclusions:

1. Equatorial orbit provides significant advantages for a LEO staging base for the SPS, but this orbit is not practically accessible except from a low-latitude launch site.
2. If a low-latitude site is desired, attention should be given first to potential locations in South America. The West Coast may be preferable if it is possible to launch over (largely uninhabited) land.
3. Transportation costs to these sites are modest but not negligible.
4. Loss of revenues due to time in transit may be cost driver for sea freight.
5. Freight modes faster than sea but cheaper than air freight (hovercraft, hydrofoils, dirigibles, etc.) should be investigated to minimize overall costs.
6. Further work is needed to determine whether possible cost savings in space operations due to equatorial launch offset terrestrial transportation costs and other costs arising from launch operations at a remote site.

REFERENCES

1. Chapman, P.K., and Searcy, J.B.: A Proposal for an Equatorial Launch Facility, The Chippewa Corporation, Lexington, Mass., 1964.

2. Frazier, M., et al: Earthport — A Launch Pad for Industry Into Space, The Sabre Foundation, Santa Barbara, California, 1977.

3. Frazier, M., The Sabre Foundation, private communication.

4. Battin, R.H.: *Astronautical Guidance,* McGraw-Hill, NY, 1964, p. 37.

5. Woodcock, G., Boeing Aerospace Corporation, private communication.

6. Douglas-Hamilton, D.H., Riley, D., and Chapman, P.K.: Studies in Laser Propulsion, Avco Everett Research Laboratory, Inc., Everett, Mass., 1978.

SECTION 5
CARGO PACKAGING

		Page
1.0	Cargo Handling Operations	5-1
2.0	Component Packaging Concepts	5-4
3.0	Integrated Packaging Concepts	5-11
4.0	Summary	5-24

SECTION 5
CARGO PACKAGING

1.0 CARGO HANDLING OPERATIONS

The integrated cargo handling operational flow cycle is illustrated in Figure 5-1. The components are initially loaded into component magazines and racks at the various factories. These magazines and racks are transported to the Launch and Recovery Site where they are temporarily stored. A shipping manifest is prepared and the various component magazines and racks are then taken from storage. The components are integrated into cargo pallets. The cargo pallets are then loaded into an HLLV orbiter.

At the LEO Base, the cargo pallet is removed from the HLLV, see Figure 5-2, and are transported to a cargo handling and storage area. The EOTV components destined for use at the LEO Base are removed from the pallets. The SPS pallets are transported to the EOTV using cargo tugs. Ten to twenty of the pallets are attached to the EOTV cargo platform.

At the GEO, the cargo pallets are flown by cargo tugs from the EOTV to the GEO Base. These pallets are then transported to a cargo handling and storage area where the pallets are offloaded. The components are distributed to the subassembly factories, the construction equipment, the maintenance modules, or to the mobile SPS maintenance equipment.

Some of the empty racks and magazines are repacked into the now-empty cargo pallets. The pallets are recycled back to Earth and the empty racks and magazines are recycled back to the factories.

Figure 5-3 gives the constraints on the packaging systems that are imposed by the cargo transportation systems. Figure 5-4 shows some of the cargo pallet component rack/magazine requirements.

REPRODUCIBILITY OF THE ORIGINAL PAGE IS POOR

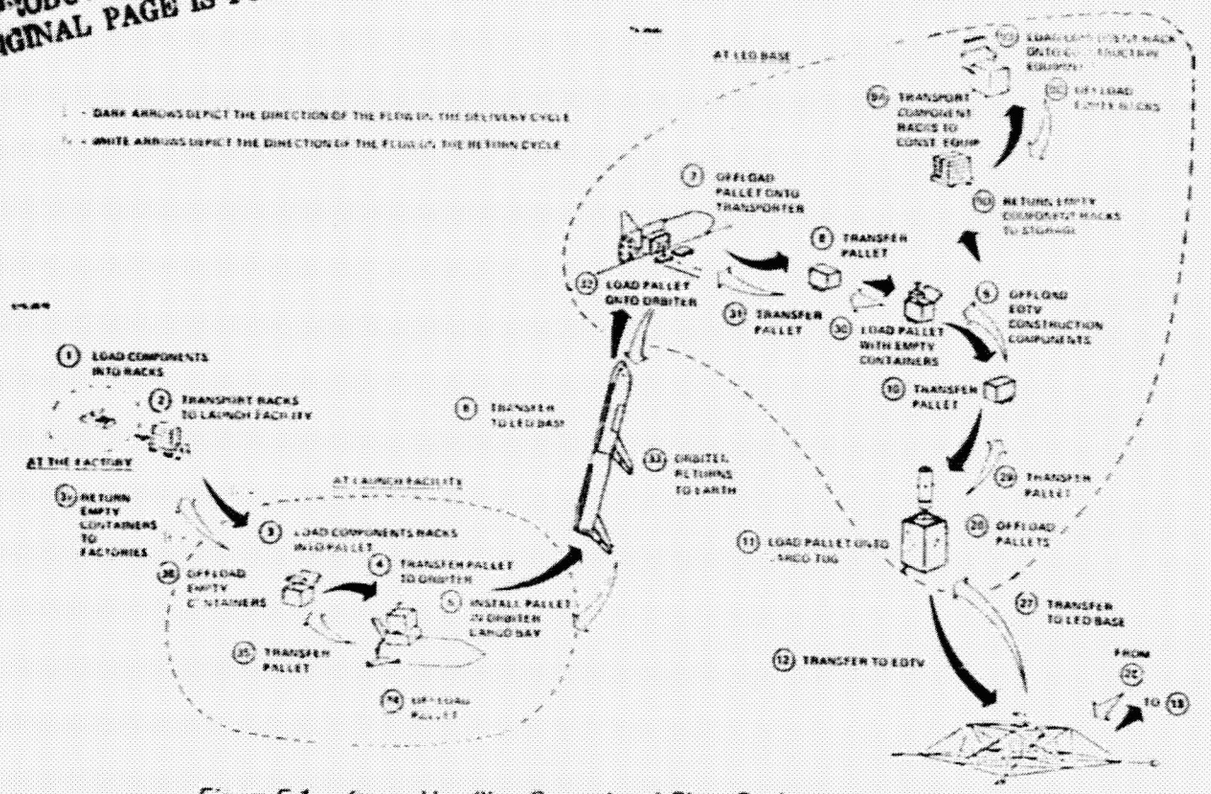

Figure 5-1. Cargo Handling Operational Flow Cycle

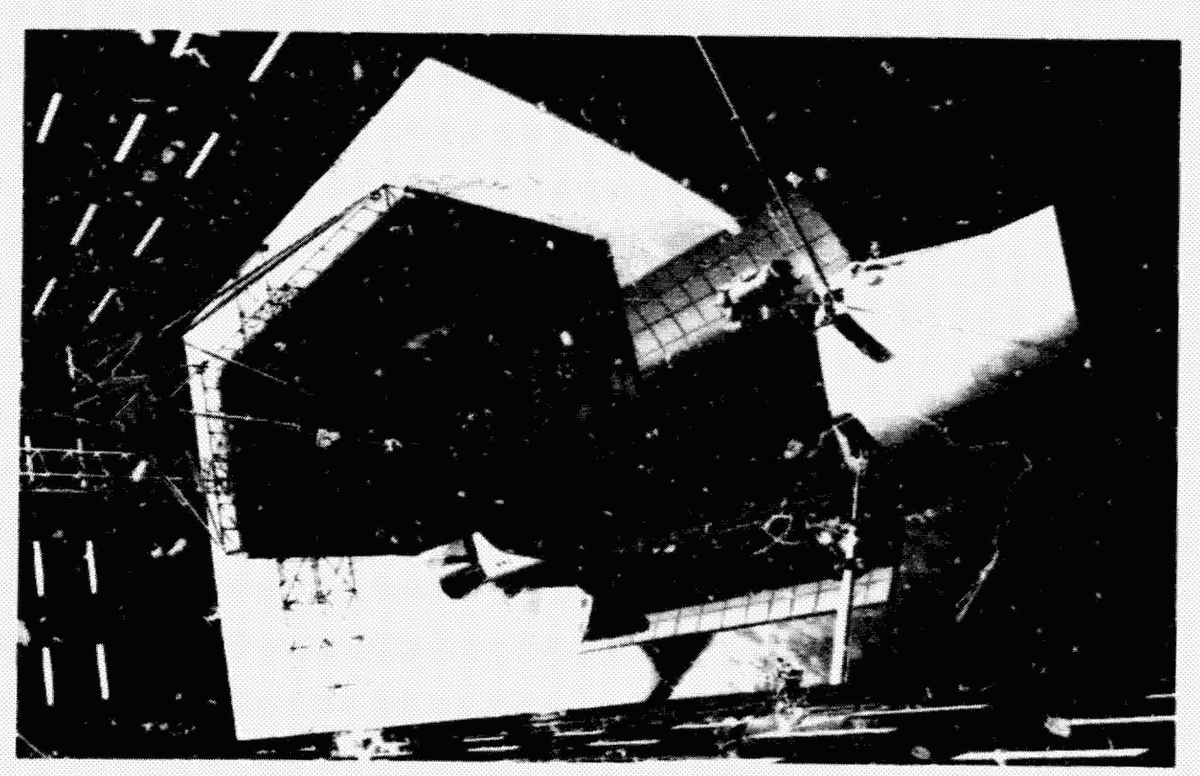

Figure 5-2. Cargo Pallet Being Offloaded from a HLLV at the LEO Base

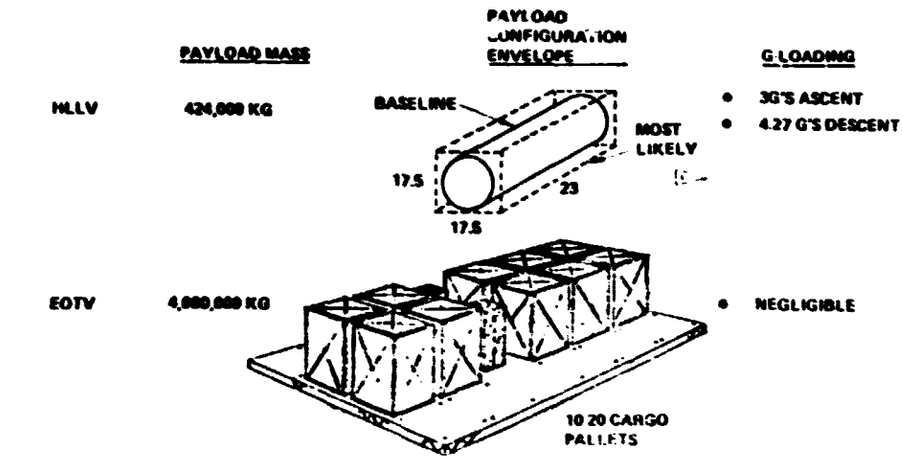

[1] THE BASELINE HLLV (WBS 1.3.1) WAS DESIGNED FOR A CYLINDRICAL PAYLOAD PALLET. HOWEVER, BOEING IN-HOUSE STUDIES HAVE INDICATED THAT A RECTANGULAR PAYLOAD BAY IS FEASIBLE. THIS CONFIGURATION IS HIGHLY DESIRABLE DUE TO THE RECTANGULAR SHAPES OF MOST PAYLOADS.

Figure 5-3. Space Transportation Constraints

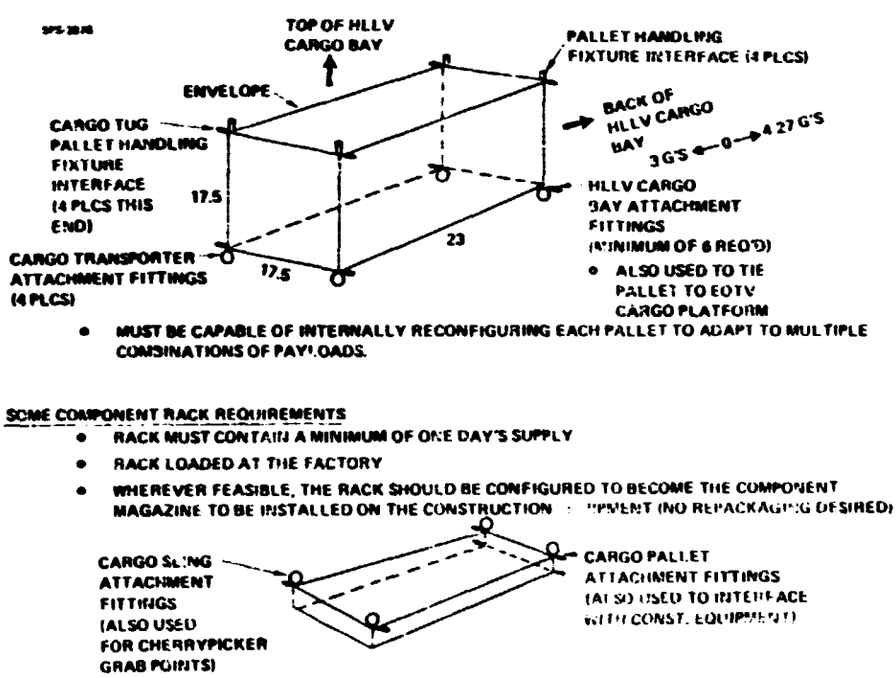

Figure 5-4. Some Cargo Pallet Requirements

2.0 COMPONENT PACKAGING CONCEPTS

A large sampling of SPS and EOTV construction components were examined in detail in order to establish representative packaging concepts. Table 5-1 lists about 60 different components. This data is based upon the baseline operational scenario where it is required to construct one 5 GW SPS within 180 days, construct a fleet of EOTV's at the rate of one per 23 days, and to supply the propellants required by the EOTV's and POTV's during the 180 day period.

The configuration of each of the components or the material from which the components would be fabricated were derived from the descriptions given the Preferred Concept Description book (D180-25037-3). In most cases, the shipping unit (i.e., the number of components packaged together in a single package) was established either by 1) the total daily consumption of the component, or 2) by the magazine size that would be compatible with the construction equipment.

NOTE: There is no claim made that the packaging concepts shown in Table 1 are optimized. As will be discussed below, there will be a need for a very meticulous packaging optimization analysis at some future time.

The data presented in Table 1 covers all of the "primary" components. These primary components are those that are either the most numerous, the most massive, and/or the largest. A careful look at the data shows that some of the most numerous components, e.g., batten end caps, do not require much payload volume and so they are classed as "secondary" components. Other secondary components are those that are small and/or few in number.

Table 5-1. SPS Components Consumption Rate, Packing, and Shipping Data

SPS Components Consumption Rate, Packing, and Shipping Data

WBS	COMPONENT/ASSEMBLY	CONFIGURATION	QTY/SOW SPS	MASS/UNIT	CONSUMPTION RATE	SHIPPING UNIT	QTY OF SHIPPING UNITS/DAY	COMMENTS
1.1.1.1.1	TYPE A BEAM							
	CHORD	3MØ 75.5cm wide .8mm thick	113 reels	4783kg/reel	0.78 reels/day	3MØ 5.3 7 reels/unit	1 @ 33400kg/rack	3MØ is arbitrary
	CAP	3MØ 34cm wide .85mm thick	113 reels	2142kg/reel	0.76 reels/day	3MØ 2.4 7 reels/unit	1 @ 15000kg/rack	3MØ is arbitrary
	BATTEN END CAP	.6 .6	16180 caps	1kg/cap (est.)	112 caps/day	.6 .4 .2 1724 units	1@ 1750kg/rack	
	END FITTING		136 units	3kg/fitting (est.)	965 fittings/day	.6 .6 .4 26 units	1@ 80kg/rack	
	TYPE B BEAM							
	CHORD	3MØ 75.5cm wide .71mm thick	745 reels	4783kg/reel	5.14 reels/day	5.3		3MØ is arbitrary
	BATTEN END CAP		187,000 caps	1kg/cap (est.)	1290 caps/day	.6 .4 .2		
	END FITTING		512	3kg/fitting (est.)	1.67 fittings/day	.6 .6 .4		
	COMMON PARTS		324	3kg/ea (est.)	1.85 fittings/day			
	JOINT FITTING		93	127kg/reel	.64 reels/day	20 .5 40 units	8 racks total	
	CAP TRAYS		682	[illegible]	[illegible]	3.5 1@ 7 units	1@ 250kg/rack	1MØ is arbitrary

Includes Type A and B materials for solar collector + antenna + interface
See Note 1

REPRODUCIBILITY OF THE ORIGINAL PAGE IS POOR

Table 5-1. SPS Components Consumption Rate, Packing, and Shipping Data (Continued)

SPS Components Consumption Rate, Packing, and Shipping Data

WBS	COMPONENT/ASSEMBLY	CONFIGURATION	QTY/SGW SPS	MASS/UNIT	CONSUMPTION RATE	SHIPPING UNIT	QTY OF SHIPPING UNITS/DAY	COMMENTS
1.1.1.3	SOLAR BLANKET	773kg/m³ 6 040 m³ 1.23 14.9 .33	5376	4675kg	37 blankets/day	1.5 15 12.31 37 units/rack	10 17597kg/rack	
1.1.1.4.1	MAIN POWER BUSES	3MB 2.75m wide 1mm thick	26	2905kg/reel	.26 reels/day	30 5.25 3 reels/rack	10 8700kg/rack (1 time per week)	3MB is arbitrary
1.1.1.4.2	ACQUISITION POWER BUSES		6	3435kg/reel	.06 reels/day	6 reels/unit	10 3888kg/rack (1 time only)	
1.1.1.4.3	SWITCH GEAR	2 1 1	103	408kg/unit	8.7 units/day	1 4 units	10 1088kg/rack	
1.1.1.4.4	DISCONNECT SWITCHES	1 .2 .2	205	204kg/unit	1.4 units/day			
1.1.1.4.5	BLOCKING DIODES	.2 .056	9536	10kg/unit (est.)	86 units/day	.56 .3 .3 86 units	10 700kg/rack	
1.1.1.4.6	INTERCONNECT CABLING		384					
1.1.1.4.7	DC/DC CONVERTORS	3 1 2	7	100kg/unit		3 6 1 2 units	10 200kg every other day	
1.1.1.8.1	SOLAR ARRAY ANNEALER CARRIAGES	10 10 2	11	5000kg		10 10 3 units	10 19000kg (10 times)	
	[illegible]	10 10	26	[illegible]	[illegible]	2 units	10 520kg	[illegible]
	[illegible] CARRIAGE	10 10 2	4	5000kg				

[illegible]

Table 5-1. SPS Components Consumption Rate, Packing, and Shipping Data (Continued)

SPS Components Consumption Rate, Packing, and Shipping Data

WBS	COMPONENT/ASSEMBLY	CONFIGURATION	QTY/SGW SPS	MASS/UNIT	CONSUMPTION RATE	SHIPPING UNIT	QTY OF SHIPPING UNITS/DAY	COMMENTS
1.1.1.6.6	DOCKING SYSTEMS	10 10	11	5000				
1.1.2.1.1	ANTENNA PRIMARY STRUCTURE							
	CHORDS	2MØ .786 wide .71mm thick	84	4783kg/reel	0.98 reels/day			2MØ is arbitrary
	BATTEN END CAPS		22246	1kg/cap	163 caps/day			
	END FITTINGS		1968	3kg/unit	11 fittings/day			
	BEAM JOINTS		794	3kg/unit	2 units/day			
	CABLE STAYS	1MØ .5	77	127kg/reel	.5 reels/day			1MØ is arbitrary
1.1.2.1.2	SECONDARY STRUCTURE	5.414 5.414 20	98	1929kg/unit	.67 units/day	20 6.5 3 units 17	10 6000kg (48 times)	
1.1.2.2	SUBARRAYS	10.4 10.4 .33	7220	1300kg/unit	50 units/day	7 11 11 22 [illegible] rack 25000kg rack + 5% 27.29 MT rack	5 racks 136.4 MT Total Every other day	
1.1.2.3.1	POWER CONDUCTORS	2.75	14 rolls	[illegible]	[illegible]			3MØ is arbitrary

* [illegible] Note [illegible]

Table 5-1. SPS Components Consumption Rate, Packing, and Shipping Data (Continued)

SPS Components Consumption Rate, Packing, and Shipping Data

WBS	COMPONENT/ASSEMBLY	CONFIGURATION	QTY/SGW SPS	MASS/UNIT	CONSUMPTION RATE	SHIPPING UNIT	QTY OF SHIPPING UNITS/DAY	COMMENTS
1.1.2.3.2	SWITCHGEAR		496	400kg/unit	3.14 units/day			
1.1.2.3.3	DC/DC CONVECTORS		238	100kg/unit	1.6 units/day			
1.1.4.2.1	ELECTRIC THRUSTER		4	3500kg/unit				
1.1.4.2.6	POWER PROCESSORS		8	100kg/unit				
1.1.6.1	INTERFACE PRIMARY STRUCTURE							
	CHORDS	3M6 .786	84	4783kg/reel	0.56 reels/day			
	BATTEN END CAPS		22246	1kg/cap	152 caps/day			
	END FITTINGS		1568	3kg/unit	11 fittings/day			
	BEAM JOINTS		294	5kg/unit	2 units/day			

REPRODUCIBILITY OF THE ORIGINAL PAGE IS POOR

Table 5-1. SPS Components Consumption Rate, Packing, and Shipping Data (Continued)

SPS Components Consumption Rate, Packing, and Shipping Data

WBS	COMPONENT/ASSEMBLY	CONFIGURATION	QTY/SGW SPS	MASS/UNIT	CONSUMPTION RATE	SHIPPING UNIT	QTY OF SHIPPING UNITS/DAY	COMMENTS
	CABLE STAYS	.6 1M@	77	127kg/reel	.5 reels/day			
1.1.6.2.3.1	SLIP RING ASSY	11.7 16M@	1	12000kg/unit		11.7 16@	1@ 12000kg (1 time only)	
1.1.2.6.1	MAINTENANCE GANTRIES	20 2				Carriage		
	CHERRYPICKERS		23				1@ __ kg/week	
	CARGO HANDLERS	10 10	4					
	CREW BUS		1				1	

REPRODUCIBILITY OF THE ORIGINAL PAGE IS POOR

Table 5-1. SPS Components Consumption Rate, Packing, and Shipping Data (Continued)

SPS Components Consumption Rate, Packing, and Shipping Data

WBS	COMPONENT/ASSEMBLY	CONFIGURATION	QTY/ EOTV	MASS/UNIT	CONSUMPTION RATE	SHIPPING UNIT	QTY OF SHIPPING UNITS/DAY	COMMENTS
1.3.2	EOTV							
1.3.2.1.1	TYPE B BEAMS							
	CHORD	.75 wide; .71mm thick	15 reels	4783kg/reel	.32 reels/day	2.3; 30; 3 units	1 unit/8 days	
	BATTEN END CAPS		3840 caps	1kg/cap	84 per day	6; .2; 2; 1724 units	1 units/23 days	
	END FITTINGS		60	3kg/unit	1.5 per day			
	JOINT FITTINGS		15	3kg/unit	.8 per day			
	CABLE STAYS							
1.3.2.3	SOLAR BLANKETS	1.23; 14.9; .33	216	3656	5 per day	1.6; 16; 3.3	.5 per day @ 38.55MT rack	
1.3.2.6.1	SOLAR ARRAY ANNEALERS							
	CARRIAGES	10; 10; 2	8	5000kg	1 every 6th day	6; 10; 10	3 units/ 2 weeks	
	ANNEALERS	10; 10	178	45kg/unit				
	FLYING CHERRYPICKER CARRIAGES	10; 10; 2	4	5000kg	1 every 6th day	6; 10; 10	1 unit every 6th week	

3.0 INTEGRATED PACKAGING CONCEPTS

Now that the component shipping units have been identified, it is necessary to integrate these shipping units into payload sets. There are several payload combination strategies. Only three strategies will be described below: 1) Payload sets based on component consumption schedules, 2) Payload sets based on achieving HLLV payload mass limit, and 3) Payloads based on a smaller HLLV.

3.1 PAYLOAD SETS BASED ON COMPONENT CONSUMPTION SCHEDULES

The "primary" shipping units and their consumption schedules were sorted from Table 1 and the results are shown in Figure 5-5. As a first step in creating an integration of these components into payload sets, the shipping schedule shown in Table 5-2 was created.

The most significant implications of this packaging strategy are the following:

- For a 7-day per week launch schedule, an average of 1.6 HLLV launches per day would be required. When this is adjusted to a 5-day per week, 2 shifts per day launch site schedule, over a 6 month delivery period it will be recessing to launch an average of 1.8 HLLV's per day (not including secondary payloads).

- The average payload mass per flight is only 270 MT (not including secondary payloads).

3.2 PAYLOAD SETS BASED ON ACHIEVING HLLV PAYLOAD MASS LIMIT

The theoretical mass-limit payload delivery parameters are shown in Figure 5-6. A total of 74319 MT are to be delivered to LEO within a 6 month time period. This will require 186 mass-limit flights. The launch rate would be 1.45 flight/day.

The packaging objective is to combine components into integrated payloads that come as close as possible to achieving 400 MT per pallet. It is unlikely that this objective will be achievable, as will be shown below.

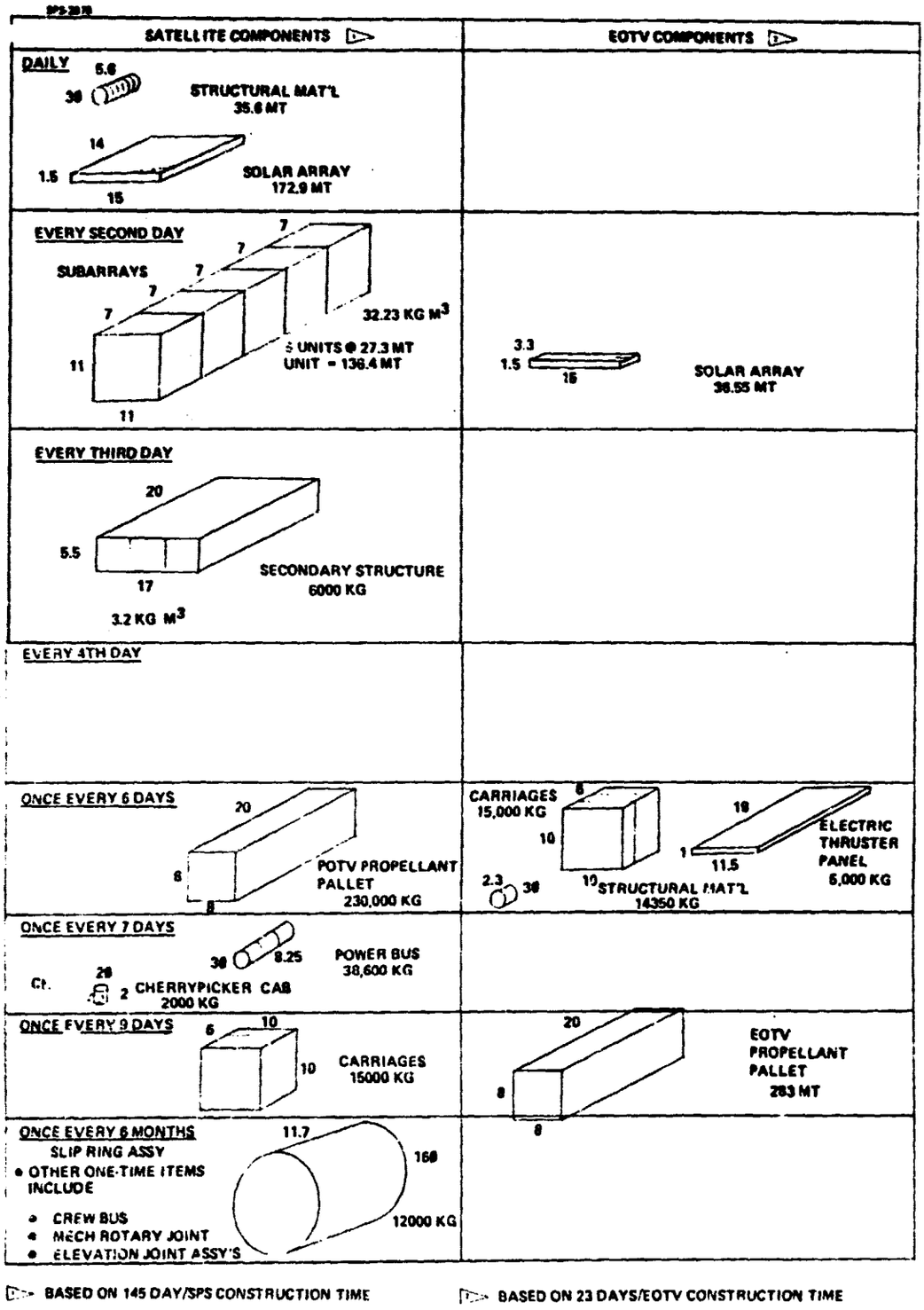

Figure 5-5. Primary Shipping Units

Table 5-2. Shipping Schedule Based on Component Consumption Schedule

SPS-2877

DELIVERY FREQUENCY (DAYS)	PRIMARY PAYLOAD MASS, MT	DAY 1	2	3	4	5	6	7	8	9	10	11	12	13	14	15	16	17	18	19	20	21	22
1	245	●	●	●	●	●	●	●	●	●	●	●	●	●	●	●	●	●	●	●	●	●	●
2	136.4		●		●		●		●		●		●		●		●		●		●		●
3	40.35			●			●			●			●			●			●			●	
4	283				●				●				●				●				●		
6	230						●						●						●				
7	40.6							●							●							●	
9	25								●										●				
PRIMARY PAYLOAD MASS PER DAY, MT (2)		245	381.4	285.4	664.4	245	652	285.6	664.4	310.4	381.4	245	934.8	245	422	285.4	664.4	245	678.8	245	664.4	320	381.4
PAYLOAD SET(S)		A	B1 B2	C	D1 D2	A	E1 E2 E3	F	D1 D2	G	B1 B2	A	H1 H2 H3	A	I1 I2	C	D1 D2	A	J1 J2	A	D1 D2	K	B1
NO. OF HLLV FLTS PER DAY (1)		1	2	1	2	1	3	1	2	1	2	1	3	1	2	1	2	1	2	1	2	1	2

(1) ● 36 FLIGHTS/22 DAYS = 1.6 FLIGHTS/DAY AVERAGE
● ADJUSTED TO A 5 DAY/WEEK LAUNCH SITE SCHEDULE = 2.24 FLTS/DAY

(2) 9,652 MT/36 FLIGHTS = 270 MT/FLT AVERAGE
(NOT INCLUDING SECONDARY PAYLOADS)

- TOTAL MASS TO BE DELIVERED DURING A 6 MONTH PERIOD:

QTY	ITEM	MASS
1	5 GW SPS CONSTRUCTION COMPONENTS	48473 MT
7.8 [1]	EOTV CONSTRUCTION COMPONENTS AND PROPELLANT	12455 MT
13.84 [2]	OPERATIONAL EOTV PROPELLANT	7833 MT
24.1	POTV PROPELLANT	5558 MT
		74319 MT

- TOTAL NUMBER OF MASS-LIMITED HLLV FLIGHTS:

$$\frac{74319 \text{ MT}}{400 \text{ MT/FLT}} = 186 \text{ FLTS}$$

- AVERAGE NUMBER OF HLLV FLIGHTS PER DAY [3] — 1.45 FLTS/DAY

- AVERAGE PAYLOAD PACKAGING DENSITY

$$\frac{400000 \text{ KG}}{(17.5 \times 17.5 \times 23)\ \text{M}^3} = 56.8\ \text{KG/M}^3$$

[1] 180 DAYS ÷ 23 DAYS TO CONSTRUCT AN EOTV = 7.8 EOTV'S CONSTRUCTED IN 6 MONTHS

[2] 180 DAYS ÷ 13 DAYS BETWEEN EOTV LAUNCHES TO GEO = 13.84 EOTV LAUNCHES TO GEO IN 6 MONTHS

[3] (180 DAYS ÷ 7 DAYS/WEEK) (5 DAYS/WEEK AVAILABLE FOR LAUNCHES) = 128.6 LAUNCH DAYS AVAILABLE IN 6 MONTHS

Figure 5-6. Theoretical Mass—Limited Payload Parameters

When attempting to configure integrated mass-limit payloads, the ground rules given in Table 5-3 apply.

Figure 5-7 shows a representative set of SPS payload sets that meet the ground rules. Table 5-4 shows inventory of primary components that remain to be delivered after each type of pallet has been flown its maximum number of times.

TABLE 5-3 PAYLOAD INTEGRATION GROUND RULES

- Do not mix SPS and EOTV components.
- Cannot exceed 17x17x23 in. pallet envelope.
- Cannot exceed 400 MT/pallet payload.
- During a 6 month period, do not deliver more than 5% excess inventory of components.
- Configure payload mix in each pallet so that primary payloads use up at least 250 MT. Remaining payload mass to be made up of miscellaneous secondary payloads.
- Try to get the total number of HLLV flights within 10% of the theoretical minimum of 186 flights.

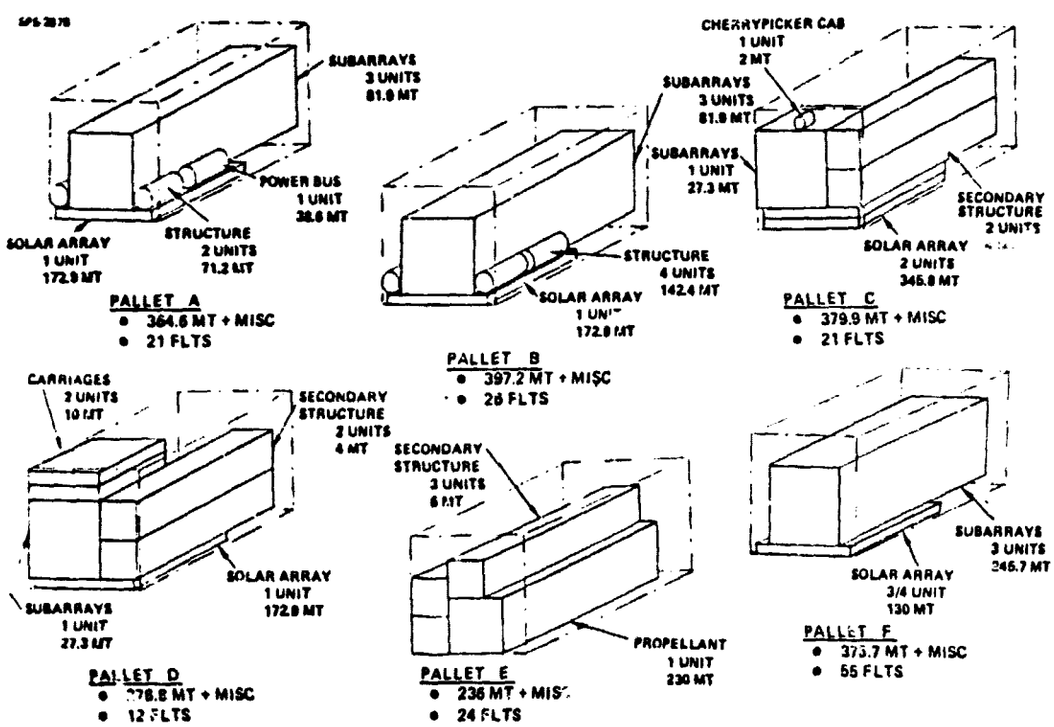

Figure 5-7. SPS Payload Pallet Sets

REPRODUCIBILITY OF THE ORIGINAL PAGE IS POOR

C-2

REMAINING INVENTORY

SPS COMPONENT	Total No. of Units Per 6 mo.	Pallet A 21 Flts	Pallet B 26 Flts	Pallet C 21 Flts	Pallet D 12 Flts	Pallet E 24 Flts	Pallet F 55 Flts	Total 159 Flts
Structure	145	103	0	0	0	0	0	
Solar Array	145	124	98	77	65	65	24 [1]	
Subarrays	363	300	222	201	165	165	0	
Sec. Struct.	145	145	145	101	77	5	0	
POTV Prop.	24	24	24	24	24	0	0	
Power Bus	21	0	0	0	0	0	0	
Cherrypicker	21	21	21	0	0	0	0	
Carriages	48	48	48	48	0	0	0	

TABLE 5-4. SPS COMPONENT DELIVERY

[1] These 24 units could be delivered as fractional units in other pallets.

There are a minimum of 159 flights required to deliver all of the primary SPS components within 6 months given the configuration of the components identified in Table 5-1.

Figure 5-8 shows a representative set of EOTV payload sets that meet the ground rules. Table 5-5 shows the inventory of primary components that remain to be delivered after each type of pallet has been flown its maximum number of times. There are a minimum of 19 flights required to deliver all of the EOTV components within 6 months given the configuration of the components identified in Table 5-1.

This nonoptimized set of SPS and EOTV payload configurations requires at least 178 HLLV flights during a 6 month period of time. To this number we have to add 2 flights for delivering the crew bus and SPS rotary joint and 7 more EOTV propellant delivery flights. This totals up to 187 flights, or 10% more flights than would be theoretically optimum.

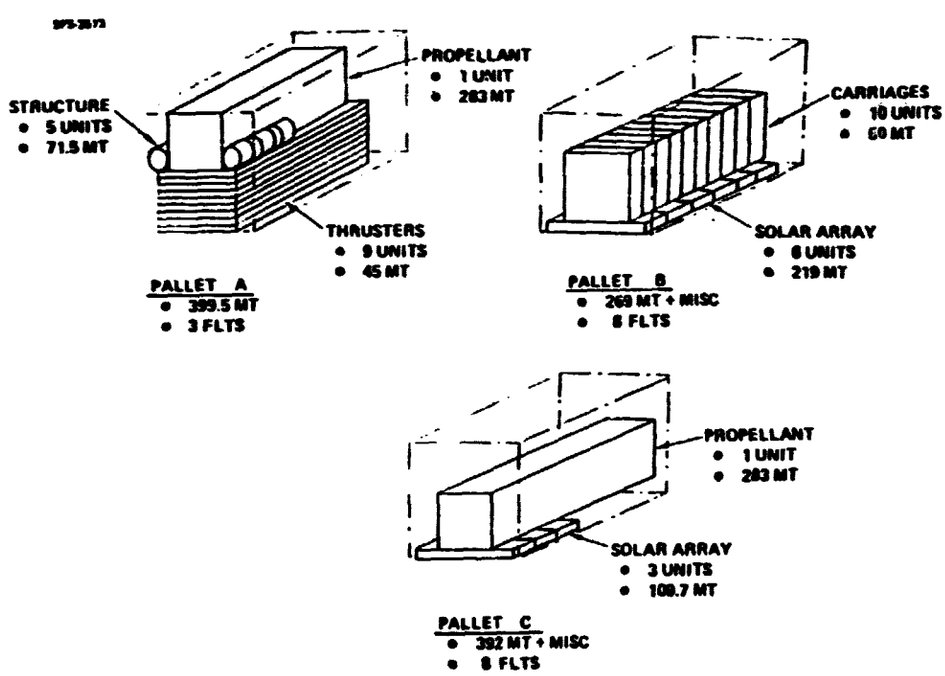

Figure 5-8. EOTV Payload Pallet Sets

REMAINING INVENTORY

EOTV COMPONENT	Total No. of Units Per 6 Mo.	Pallet A 3 Flts	Pallet B 8 Flts	Pallet C 8 Flts	Total 19 Flts
Solar Array	73	73	25	0	
Thrusters	24	0	0	0	
Carriages	80	80	0	0	
Structure	24	9	0	0	
Propellant	18	15	15	7 1	

TABLE 5-5. EOTV COMPONENT DELIVERY

1 Requires 7 additional Flts.

Table 5-6 identifies several things that should be considered in future studies that would help reduce the number of HLLV flights that would be required. It is recommended that the carriages be constructed on orbit rather than being delivered preassembled. (We can subtract 11 EOTV component delivery flights from the 187 identified HLLV flights.) On-orbit assembly of the subarrays and antenna secondary structure should be explored again.

3.3 PAYLOAD SETS BASED ON A SMALLER HLLV

In a study of Technology Requirements for Future Earth-to-Geosyncronous Orbit Transportation Systems (Contract NASI-15301) currently being conducted by Boeing for NASA-Langley Research Center, a smaller HLLV has been proposed. This vehicle would have a 500,000-lb payload mass and an 11 x 11 x 18 in. payload envelope. The impact on the SPS payload packaging and on-orbit assembly was preliminarily assessed and the results are given in Table 5-7.

It is concluded that a detailed trade study will be required to assess the relative cost of the additional on-orbit assembly, launch site facilities, etc., before the SPS program commits to a smaller HLLV.

TABLE 5-6

TACTICS FOR INCREASING PACKAGING DENSITIES

- Assemble carriages on-orbit - This would eliminate a large volume/low density primary payload from both the SPS and EOTV payload sets (see Pallet D in Figure 7 and Pallet B in Figure 8). This should be done for sure. It is estimated that at least 11 flights could be eliminated (eliminates EOTV Pallet B).

- Assemble subarrays on-orbit - This would have the most profound effect on achieving higher packaging density. However, this was explored in an earlier study and it was found that this would be a high risk option.

- Assemble antenna secondary structures on-orbit - The baseline articulated, self-deploying area structure package is a very large/very lightweight item. Constructing these structures from roll-stock material, such as is done for all of the primary structure, would have substantial effect on reducing the number of HLLV flights. This was explored in an earlier study and it was found to be feasible but it required complicated construction equipment and more elaborate facilitization.

TABLE 5-7
SMALL HLLV PACKAGING CONSIDERATIONS

- Small HLLV Payload Parameters
  - 11x11x18m cargo pallet envelope
  - 500,000 lb = 226,737 KG max. payload
  - No. of mass-limited launches required = 327 FLTS MIN.
  - Average number of flts/day = 2.54 FLTS/DAY
- Consequences
  - Solar Array Blankets
    - Ship 15m wide blankets on end rather than flat (the preferred orientation).

    or
    - Redesign to narrower (11m) width
  - Antenna Subarrays
    - Assemble subarrays on-orbit—previous (unpublished) analyses of on-orbit subarray assembly found that this is feasible but it will require a detailed trade study to evaluate its costs.

TABLE 5-7 (Continued)

Consequences (Continued)

- o Antenna Secondary Structures
  - o Assemble this structure on-orbit rather than using a deployable area structure
- o Carriages
  - o Assemble on-orbit
- o Slip Ring
  - o Assemble on-orbit
- o Crew Modules
  - o Redesign to fit the smaller payload bay dimensions and mass limit
- o EOTV Thruster Panel
  - o Ship in fractional pieces rather than whole panel
- o POTV and EOTV Propellant
  - o Would have to ship less than 1/2 the required propellant/pallet. This would require dedicated tankers, on-orbit propellant storage and transfer, etc.

TABLE 5-7 (Continued)

- Conclusions

  - Will require a detailed trade study to evaluate the relative cost of this additional on-orbit assembly operations (additional crew, machinery, crew modules, risk, etc.) and increased number of vehicle stages, launch facilities, etc.

  - The additional risk involved in the on-orbit assembly of subarrays and slip rings may not be worth the price.

4.0 SUMMARY

The cargo packaging analysis is summarized in Table 5-8.

The recommendations that have resulted from this analysis are given in Table 5-9.

TABLE 5-8
TASK 45305 CARGO PACKAGING ANALYSIS
SUMMARY

- The integrated cargo handling operational flow cycle has been described from the time components are packaged at the factories to the time that components are utilized by construction equipment.
- Cargo pallet functional requirements identified.
- Component rack functional requirements identified.
- SPS and EOTV component comsumption rate, packaging, and shipping schedule data has been created for over 60 components (includes propellants).
- Integrated packaging concepts analyzed.
    - Payload sets based on component consumption schedule requires
        - 232 flights @ average of 270+MT/FLT.
    - Payloads sets based on mass-limited launches requires
        - 176 flights @ average of 345+MT/FLT.
    - Theoretically optimized mass-limited launches requires
        - 170 flights @ average of 400 MT/FLT.

TABLE 5-9

TASK 45305 CARGO PACKAGING ANALYSIS
RECOMMENDATIONS

- Configure the HLLV to accept a 17.5x17.5x21 m, 400 MT payload pallet.
- Ship some components in units (racks) that can be utilized as dispensing magazines on construction equipment.
- Combine components into payload sets that can come close to achieving a 400 MT mass-limit.
- Configure the pallets to be easily re-configured to accept multiple combinations of primary and secondary payloads.
- Assemble carriages on-orbit rather than delivering them preassembled.
- Reassess on-orbit assembly of subarrays and antenna secondary structure.
- Use 400 HLLV flights per year as the maximum flight schedule to size the HLLV fleet size and launch/recovery site.
- Create a cargo packaging analysis computer model.

SECTION 6

LAUNCH AND RECOVERY SITE FACILITIES AND OPERATIONS

		Page
1.0	Descriptions of Launch and Recovery Site Facilities and Operations	6-1
WBS 1.3.7	Ground Support Facilities	6-1
WBS 1.3.7.1	Launch Facilities	6-4
WBS 1.3.7.1.1	HLLV Launch Facilities	6-4
WBS 1.3.7.1.2	PLV Launch Facilities	6-17
WBS 1.3.7.2	Recovery Facilities	6-18
WBS 1.3.7.2.1	Landing Site	6-19
WBS 1.3.7.2.2	HLLV Booster Processing Facility	6-19
WBS 1.3.7.2.3	HLLV Booster Processing Facility	6-23
WBS 1.3.7.2.4	Engine Maintenance Facility	6-25
WBS 1.3.7.2.5	Hypergolic Maintenance Facility	6-25
WBS 1.3.7.2.6	Passenger Offloading Facility	6-25
WBS 1.3.7.2.7	PLV Booster Processing Facility	6-26
WBS 1.3.7.2.8	PLV Orbiter Processing Facility	6-27
WBS 1.3.7.2.9	Vertical Assembly Building	6-27
WBS 1.3.7.2.10	Mobile Launcher Platform	6-28
WBS 1.3.7.3	Fuel Facilities	6-28
WBS 1.3.7.4	Logistic Support	6-29
WBS 1.3.7.5	Operations	6-30

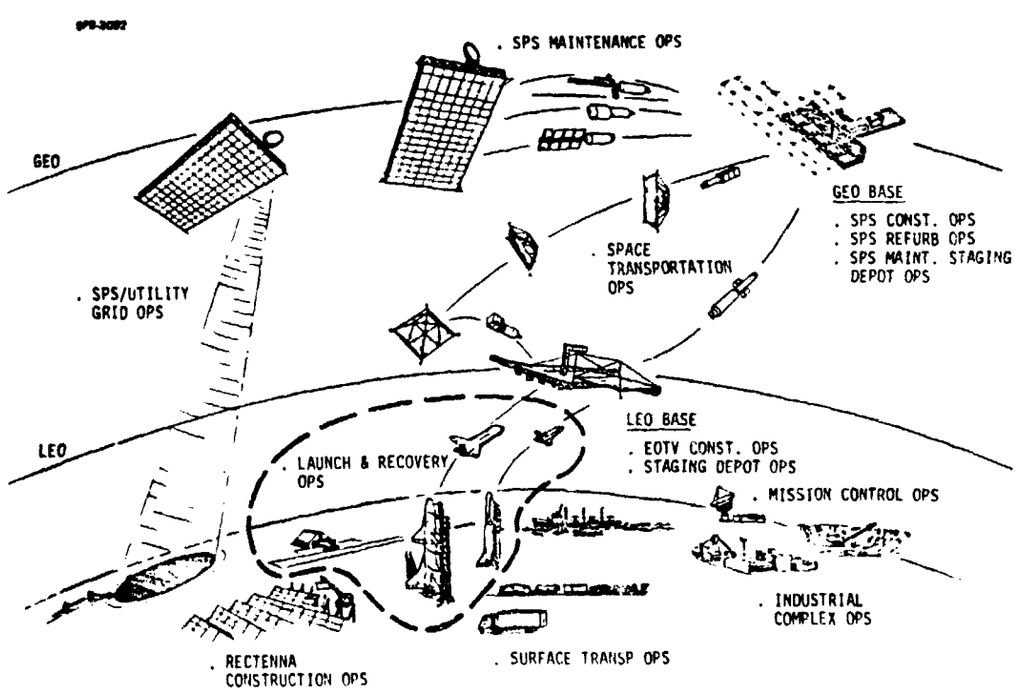

1.0 DESCRIPTIONS OF THE LAUNCH AND RECOVERY SITE FACILITIES AND OPERATIONS

This section contains detailed descriptions of the various SPS launch and recovery facilities and the operations conducted at these facilities. Kennedy Space Center is the reference location for these facilities. The descriptions would be applicable to any other land-based site. There would be some differences if a sea-based site were selected.

These descriptions are presented by WBS number sequence.

WBS 1.3.7 Ground Support Facilities

WBS Dictionary

This element includes all land, buildings, roads, shops, etc. required to support the cargo handling, launching, recovering, refurbishment and operations of the space transportation system.

Element Description

Figure 6-1 shows the various ground support facilities that have been identified and their functional interfaces. Each of these elements are described in following subsections.

The reference launch and recovery site is the Kennedy Space Center. Maps of the SPS space transportation ground support facilities at this location are shown in Figures 6-2, -3, and -4.

The landing site (WBS 1.3.7.2.1) is common to both the HLLV and PLV ground support operations.

The HLLV facilities will be new.

The PLV facilities will be shared with the Space Transportation System (STS) Shuttle-Growth vehicle ground facilities.

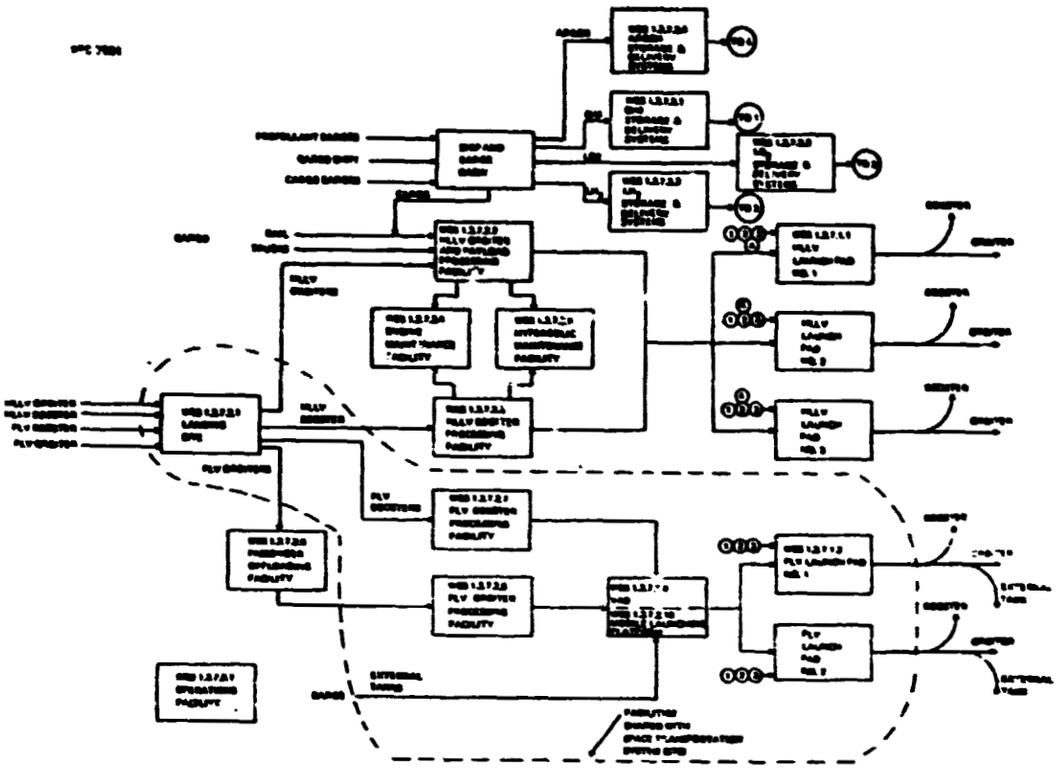

Figure 6-1. Ground Support Facilities

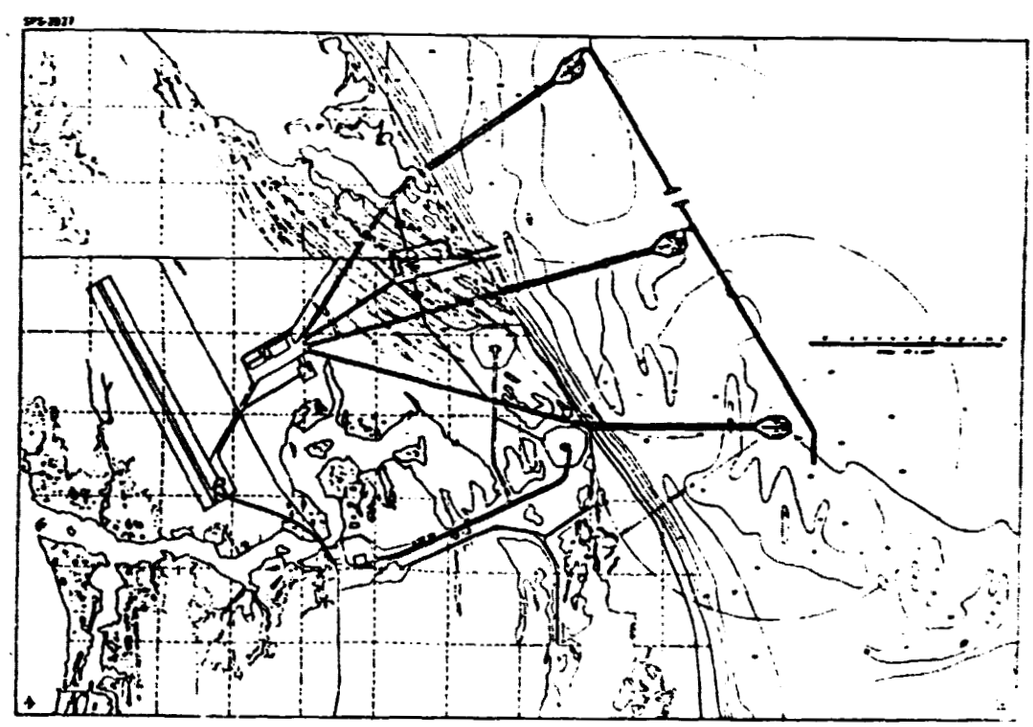

Figure 6-2. Overlay of HLLV Pads on KSC Map

REPRODUCIBILITY OF THE ORIGINAL PAGE IS POOR

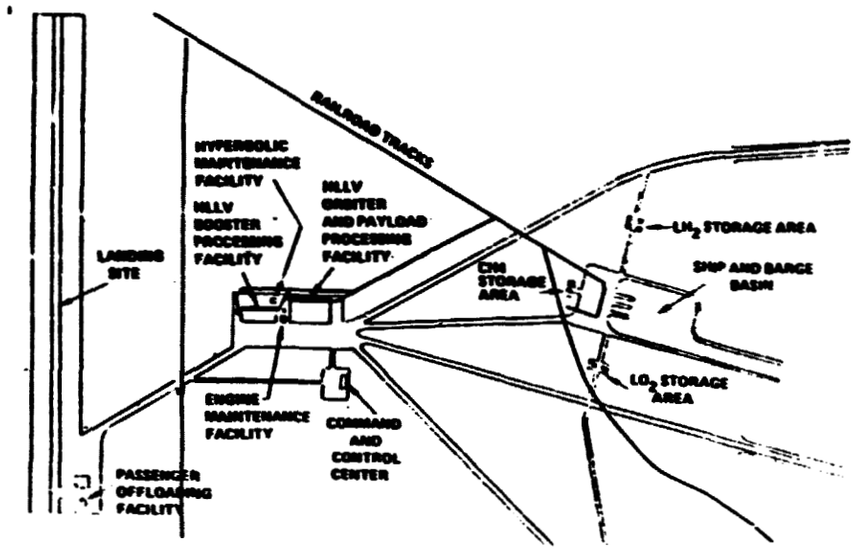

Figure 6-3. SPS Ground Support Facilities

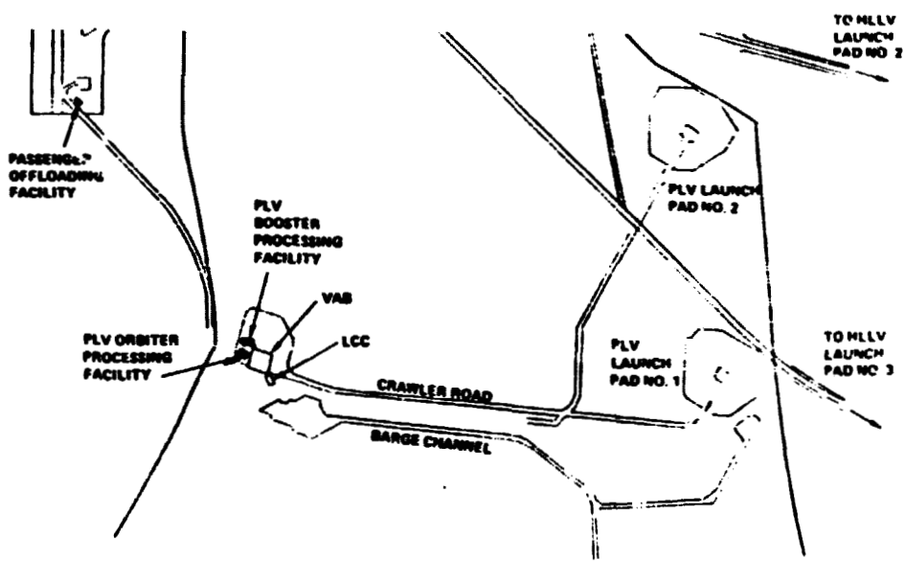

Figure 6-4. SPS Ground Support Facilities Shared with the Space Transportation System

Table 6-1 shows the estimated total annual man hours required at KSC to operate the SPS ground support facilities.

WBS 1.3.7.1 Launch Facilities and Operations

WBS Dictionary

This element includes the design and construction of the actual launch facility and its associated equipment and the launch operations.

Element Description

This element includes both the HLLV and the PLV launch facilities, systems, and operations. Each of these are discussed in following sections.

WBS 1.3.7.1.1 HLLV Launch Facilities and Operations

WBS Dictionary

This element includes the HLLV launcher/erection, its associated subsystems and operations.

Element Description

The reference HLLV launcher/erector concept is illustrated in Figure 6-5. Three HLLV launch facilities are required. The operational timeline for the launch pad operations is shown in Figure 6-6. The booster is backed onto the launcher/erector first. The orbiter is then backed onto the launcher/erector and the two stages are united. The vehicle then goes through the necessary prelaunch checks after which it is rotated to the vertical. Further prelaunch checks are conducted and then the vehicle is fueled. If the orbiter contains an EOTV or POTV propellant pallet, the LO_2, LH_2, and/or argon are pumped into the pallet tanks at this time. The vehicle is then launched.

Figure 6-7 illustrates the integrated operational timelines for the 3 HLLV launch pads. This timeline is based on launching 400 HLLV's per year. A 7 day/week, 2

TABLE 6-1
SPS GROUND SUPPORT FACILITIES TOTAL ANNUAL MAN-HOURS

1.3.4	Ground Support Facilities					(5,174,532)			(7,676,714)
1.3.7.1	Launch Facilities								
1.3.7.1.1	HLLV Launch Facilities					(476,800)			(862,500)
		Booster and Orbiter Installation on Launcher/ Erector	400	30	1	96,000			
		Integration Testing with	400	15	1	48,000			
		Access Equipment Handling	400	20	2	128,000			
		Launch Site Installation and Checkout							
		o Make Up Interfaces Prep. for Launch, Support Testing	400	12	1	38,400			
		o Pre. for Fueling and Countdown	400	12	1	38,400			
		o Launch Area Maintenance	365				14	3	122,640
		Launcher/Erector							
		o Turn Around Processing	400	20	2	128,000			

TABLE 6-1 (Con't)

		o LRU Maintenance, Umbilical Plates Removal/Replace, Holdown Arms/Supports and Propellant, Pneu-Matic, and Electrical Interfaces	400				10	10	320,000
		o Semi Annual (6 Mos.) Periodic Structural Inspection and Maintenance							
		o Inspections	6				70	50	168,000
		o Maintenance Repairs	6				105	50	252,000
1.3.7.1.2	PLV Launch Facilities					(79,296)			(133,616)
		Booster and Orbiter Installation on MLP	56	30	1	13,440			
		Integration Testing with	56	15	1	6,720			
		Access Equipment Handling	56	20	2	17,920			
		Launch Site Installation and Checkout							
		o Make Up Interfaces Prepare for Launch, Support Testing	56	12	1	17,920			
		o Prepare for Fueling	56	12	1	5,376			
		o Launch Area Maint.	56				14	3	18,816

TABLE 6-1 (Con't)

		MLP							
		o Turnaround Processing	56	20	2	17,920			
		o LRU Maintenance, Umbilical Plates Removal/Replace, Holdown Arms/Supports and Propellants, Pneumatic, and Electrical Interfaces	56				10	10	44,800
		o Semi-Annual Periodic Structural Inspection and Maintenance							
		o Inspections	1				70	50	28,000
		o Maint Repairs	1				105	50	42,000
1.3.7.2	Recovery Facilities								
1.3.7.2.1	Landing Site					(145,920)			(218,880)
		HLLV Booster Landing OPS	400	20	1	64,000			
		HLLV Orbiter Landing OPS	400	20	1	64,000			
		PLV Booster Landing OPS	56	20	1	8,900			
		PLV Orbiter Landing OPS	56	20	1	8,960			
		Maintenance and Sustaining of Facilities/Equipment (1.5 to 1)	912				30	1	218,880

TABLE 6-1 (Con't)

1.3.7.2.2	HLLV Orbiter and Payload Processing Facility					(906,400)	(1,359,600)
		HLLV Orbiter Processing					
		o Periodic Inspections					
		"A" Check (Ea. Cycle)	320	25	2	128,000	
		"B" Check (Every 5th Cycle)	80	50	2	64,000	
		"C" Check (Once in 50 Launches)	8	62.5	13	52,000	
		o Inspection Pickups & Maintenance Actions from Inspections					
		"A" Check (Factor 1.5 to 1.0)	320	37.5	2	192,000	
		"B" Check (Factor 2.0 to 1.0)	80	100	2	128,000	
		"C" Check (Factor 1.0 to 1.0)	8	62.5	13	52,000	
		Payload Processing					
		o Pallet Refurb & Reconfiguration	400	12	1 1/2	57,600	
		o Payload Installation & Checkout	400	12	1 1/2	57,600	
		o Cargo Receiving/ Storage/Distribution	365	20	3	175,200	
		o Maintenance and Sustaining of Facilities and Equipment (1.5 to 1) 1.5 to 1.0)					1,359,600

TABLE 6-1 (Con't)

1.3.7.2.3	HLLV Booster Processing Facility					(492,800	(739,200)
		Periodic Inspections					
		"A" Check (Ea. Cycle)	320	20	2	102,400	
		"B" Check (Every 5th Cycle)	80	40	2	51,200	
		"C" Check (Once in 50 Launches)	8	50	13	41,600	
		Inspection Pickups & Maintenance Actions from Inspections					
		"A" Check (Factor 1.5 to 1.0)	320	30	2	153,600	
		"B" Check (Factor 2.0 to 1.0)	80	80	2	102,400	
		"C" Check (Factor 1.0 to 1.0)	8	50	13	41,600	
		Maintenance and Sustaining of Facilities and Equipment (1.5 to 1)					739,200
1.3.7.2.4	Engine Maintenance	(Tasks and Manning Accounted for in the "B" and "C" Check Maintenance Actions in WBS 1.3.7.2.2 and 1.3.7.2.3)					

TABLE 6-1 (Con't)

1.3.7.2.5	Hypergolic Maintenance Facility	(Tasks and Manning Accounted for in the "B" and "C" Check Maintenance Actions in WBS 1.3.7.2.2 and 1.3.7.2.3)					
1.3.7.2.6	Passenger Offloading Facility						
		PLV Safing, Passenger Placement, Passenger Offloading	56	5	(2240) 1		(3360)
		Maintenance and Sustaining of Facilities and Equipment (1.5 to 1)					3360
1.3.7.2.7	PLV Booster Processing Facility						
		Periodic Inspections				(67520)	(101,280)
		"A" Check (Ea. Cycle)	45	20	2	14400	
		"B" Check (Every 5th Cycle)	11	40	2	7040	
		"C" Check (Once in 50 Launches)	1	50	13	5200	

TABLE 6-1 (Con't)

		Inspection Pickups and Maintenance Actions From Inspections					
		"A" Check (Factor 1.5 to 1.0)	45	30	2	21600	
		"B" Check (Factor 2.0 to 1.0)	11	80	2	14080	
		"C" Check (Factor 1.0 to 1.0)	1	50	13	5200	
		Maintenance and Sustaining of Facilities and Equipment (1.5 to 1)					101,280
1.3.7.2.8	PLV Orbiter Processing Facility					(75656)	(1,134,948)
		PLV Orbiter Periodic Inspections					
		"A" Check (Ea. Cycle)	45	20	2	14400	
		"B" Check (Every 5th Cycle)	11	40	2	7040	
		"C" Check (Once in 50 Launches)	1	50	13	5200	
		Inspection Pickups and Maintenance Actions from Inspections					

TABLE 6-1 (Con't)

1.3.7.2.8 (Con't)	PLV Orbiter Processing Facility	"A" Check (Factor 1.5 to 1.0)	45	30	2	21,600	
		"B" Check (Factor 2.0 to 1.0)	11	80	2	14,080	
		"C" Check (Factor 1.0 to to 1.0)	1	50	13	5,200	
		Passenger Module				(8,136)	
		"A" Check (Ea. Cycle)	45	5	1	1,800	
		"B" Check (Every 5th Cycle)	11	10	1	880	
		"C" Check (Once in 50 flights)	1	12	6	576	
		Inspection Pickups and Maintenance Actions From Inspections					
		"A" Check (Factor 1.5 1.0)	45	8	1	2,880	
		"B" Check (Factor 2.0 1.0)	11	20	1	1,760	
		"C" Check (Factor 1.0 1.0)	1	5	6	240	
		Maintenance and Sustaining of Facilities and Equipment (1.5 to 1)					1,134,984
1.3.7.29	Vertical Assembly					(35,840)	(36,854)
		High Bay No. 1	28	20	2	8,960	
		High Bay No. 2	28	20	2	8,960	

TABLE 6-1 (Con't)

1.3.7.2.9 (Con't)	Vertical Assembly Building	Maintenance Support	260				8	2	33,280
		Test Station Support	56	8	2	7,168			
		PLV Booster C/O Consoles	56	6	2	5,376			
		PLV Orbiter C/O Consoles	56	6	2	5,376			
		Maintenance Planning	56				4	2	3,584
1.3.7.2.10	Mobile Launcher Platform	(See 1.3.7.1.2)							
1.3.7.3	Fuel Facilities	Operational Support				727,080			823,440
		LO_2 (3 Units)	365	18	3	157,680			
		LO_2 (3 Units)	365	27	3	236,520			
		LCH_4 (3 Units)	365	9	3	78,840			
		Maintenance Support to System							
		LO_2	365				27	3	236,520
		LH_2	365				41	3	359,160
		LCH_4 (4 Units)	365				14	3	122,640
		Gas Storage & Distribution (GN_2, GO_2, GH_e)	365	9	3	78,840	9	3	78,840
		Fueling Area							
		Stage Fueling Operations	365	20	3	175,200			
		Fueling Area Maintenance	365		3		30	3	26,280

TABLE 6-1 (Con't)

1.3.7.4	Logistic Support					(1,314,000)				(1,971,000)
		Surface Transp. Support	365	50	3	43,000				
		Railroad Transp. Support	365	50	3	438,000				
		Ship/Barge Transp. Support	365	50	3	438,000				
		Maint. Support (1.5 to 1.0)	365				225	3		197,100
1.3.7.5	Operations					(851,280)				(292,000)
		Command and Control Launch and Recovery Site Command Center	365	20	3	175,200				
		Landing Site C&C Group	365	10	1	29,200				
		Payload Processing C&C Group	365	10	3	87,600				
		HLLV Processing C&C Group	365	10	3	87,600				
		PLV Processing C&C Group	365	10	2	58,400				
		Launch C&C Group								
		Launch Site "A" Consoles	365	10	2	58,400				
		Launch Site "B" Consoles	365	10	2	58,400				

TABLE 6-1 (Con't)

1.3.7.5 (Con't)	Operations	Launch Site "C" Consoles	365	10	2	58,400			
		Console Equipment Maint.	365				20	2	116,800
		LPS System Support Including Data Reduction	365	20	2	116,800			
		LPS Maintenance & Sustaining	365				30	2	175,200
		Propellant C&C Group	365	10	3	87,600			
		Space Crew Support C&C Group	56	10	1	4,480			
		Facility Services C&C Group	365	10	3	87,600			

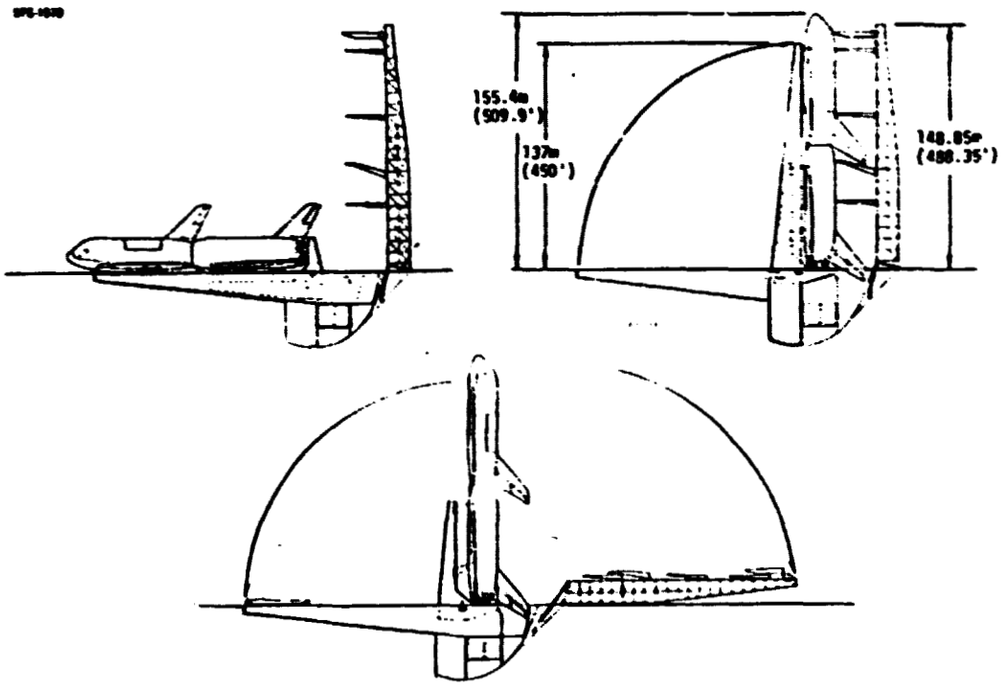

Figure 6-5. Launcher/Erector Concept

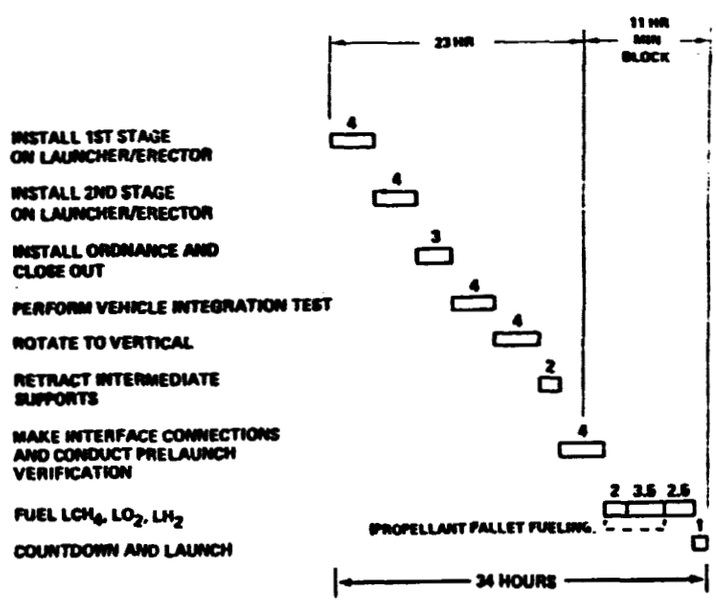

Figure 6-6. Integrated Vehicle Operations Timelines

REPRODUCIBILITY OF THE
ORIGINAL PAGE IS POOR

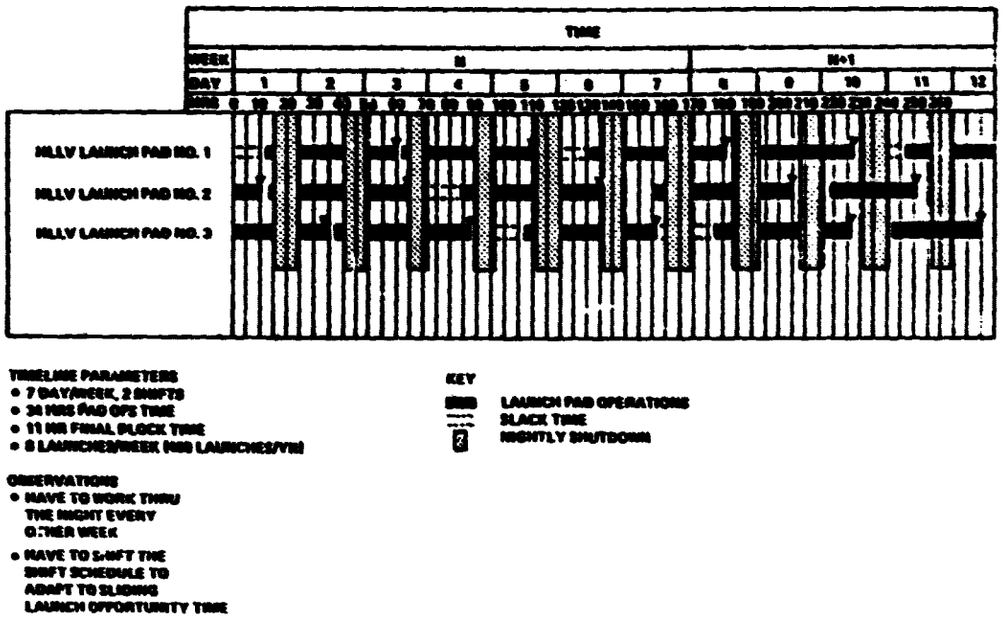

Figure 6-7. HLLV Launch Pad Operations

shifts/day schedule is the preferred schedule. Other schedules, such as 5 days/week — 2 shifts and 5 days/week — 3 shifts, were also considered. The selected schedule provides for the most efficient use of the launch pads (minimal slack time) while allowing sufficient time available (the 8 hours/day shutdown) to make up lost time. This available time could also be utilized to support a higher launch rate or to keep the space construction on schedule if one of the three launch pads become inoperative (for example, because of a vehicle explosion on the pad).

WBS 1.3.7.1.2 PLV Launch Facilities and Operations

WBS Dictionary

This element includes the PLV launch pad, its associated subsystems, and operations. The Mobile Launcher Platform is not included.

Element Description

The reference PLV launching pads are considered to be those that would be built for a Shuttle-growth vehicle. The KSC pads 39A and 39B are the candidate locations for these facilities. The Shuttle-growth launch pad configuration has not been defined.

The major PLV-specific provision that will have to be included at these launch pads will be a means for boarding the 75 passengers into the Passenger Module that will be located within the Shuttle cargo bay.

WBS 1.3.7.2 Recovery Facilities

WBS Dictionary

This element includes the design and construction of the recovery facilities and their associated operations.

Element Description

There are eleven sub-elements that have been identified:

WBS 1.3.7.2.1	Landing Site
WBS 1.3.7.2.2	HLLV Orbiter and Payload Processing Facility
WBS 1.3.7.2.3	HLLV Booster Processing Facility
WBS 1.3.7.2.4	Engine Maintenance Facility
WBS 1.3.7.2.5	Hypergolic Maintenance Facility
WBS 1.3.7.2.6	Passenger Offloading Facility
WBS 1.3.7.2.7	PLV booster Processing Facility
WBS 1.3.7.2.8	PLV Orbiter Processing Facility
WBS 1.3.7.2.9	External Tank Processing Facility
WBS 1.3.7.2.10	Vertical Assembly Building
WBS 1.3.7.2.11	Mobile Launcher Platform

WBS 1.3.7.2.1 Landing Facilities

WBS Dictionary

This element includes the design and construction of the landing strip, the contral tower and other landing site facilities, and the operations associated with these.

Element Description

The landing strip provided for the STS will have to be widened from 300 feet to 600 feet to adapt to the HLLV booster and orbiter landing and taxi requirements.

The control tower, navigational aides, fire/rescue facilities, and ground support equipment required for the STS will be used for the HLLV vehicle landing support operations.

WBS 1.3.7.2.2 HLLV Orbiter and Payload Processing Facility and Operations

WBS Dictionary

This element includes the design and construction of the HLLV orbiter and payload processing facilities and its equipment and operation.

Element Description

The HLLV Orbiter and Payload Processing Facility (HOPPF) is shown in Figure 6-8.

The HLLV Orbiter is backed into a vacant bay by the towing vehicle. The vehicle will be parked in a precise location and it will be leveled by leveling jacks as required. The vehicle will be transferred to facility power and services by connecting one or more umbilicals. Service platforms will be moved into position around the vehicle and the cargo bay doors are opened.

Payload Processing Systems and Operations - The 500MT crane will be equipped with a pallet handling fixture. This fixture interfaces with handling points on the pallets. The pallet is removed from the cargo bay and transferred to one of two pallet processing stands located aft of the vehicle maintenance shop area.

Once the pallet is installed on the pallet stand, the overhead crane moves away to attend to other tasks. A pallet refurbishment crew descends upon the pallet.

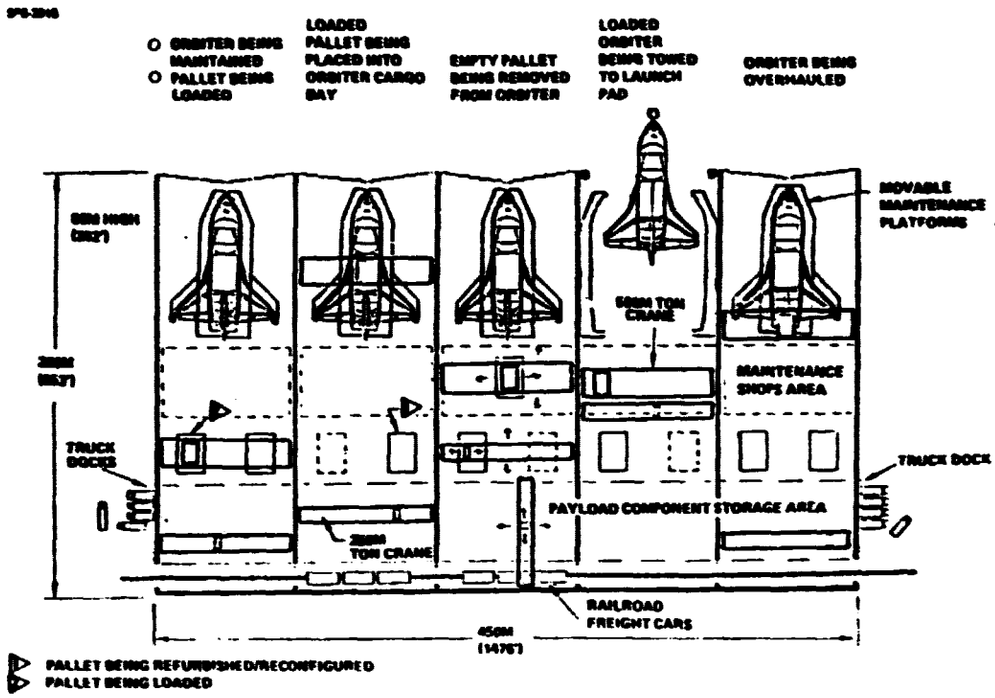

Figure 6-8. HLLV Orbiter and Payload Processing Facility

Using hand tools and cherrypicker cranes, this crew will reconfigure the cargo pallet to adapt it to its next payload. There will be several internal component rack tie-down mechanisms to be repositioned.

Once the pallet is reconfigured, it is ready to be loaded with the collection of components called for by the payload manifest.

Cargo is delivered to this facility via rail car and trucks. The cargo is distributed to the storage areas in the bays based on the payload manifests for the pallets. An overhead crane that can traverse orthogonally to the bays is used to move very large items.

Most of the components will be moved by fork lift trucks or by the 250MT cranes located in each bay.

After the pallet is loaded, it is picked up by the 500M tone crane and moved to the orbiter. The pallet is installed in the orbiter cargo bay and then the cargo bay doors are closed.

REPRODUCIBILITY OF THE ORIGINAL PAGE IS POOR

HLLV Orbiter Maintenance Systems and Operations - Figure 6-9 shows a vehicle maintenance operational flow diagram. These operations would be typical of those required for the HLLV Orbiter, HLLV Booster, and the PLV vehicle stages.

Integrated Operations - Figure 6-10 shows the processing operations timeline for a single HLLV Orbiter. Figure 6-11 shows the integrated processing operation for 7 HLLV Orbiters.

It was found that a 7 day/week, 3 shifts/day schedule was the most efficient schedule as well as leading to a requirement for fewer Orbiters than would be required by other schedules. The selected schedule was based on 400 launches per year. As this timeline shows, only 4 of the 5 bays would be occupied at any time. The additional bay would be used to perform major overhauls that would require the vehicle to be removed from the operational cycle.

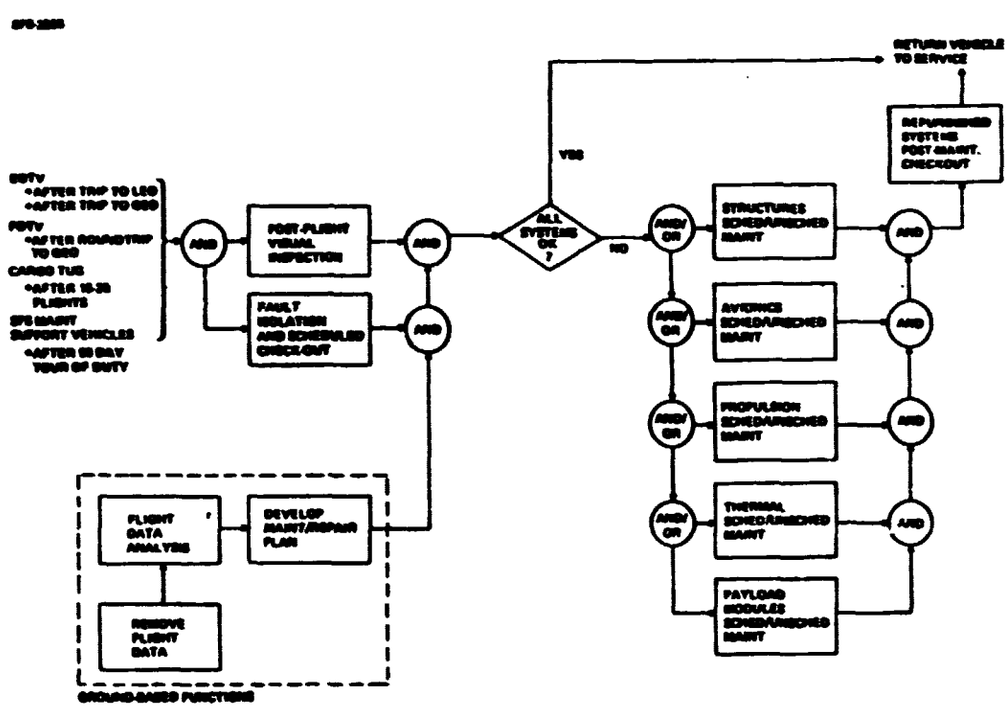

Figure 6-9. Space Vehicle Maintenance Functional Flow

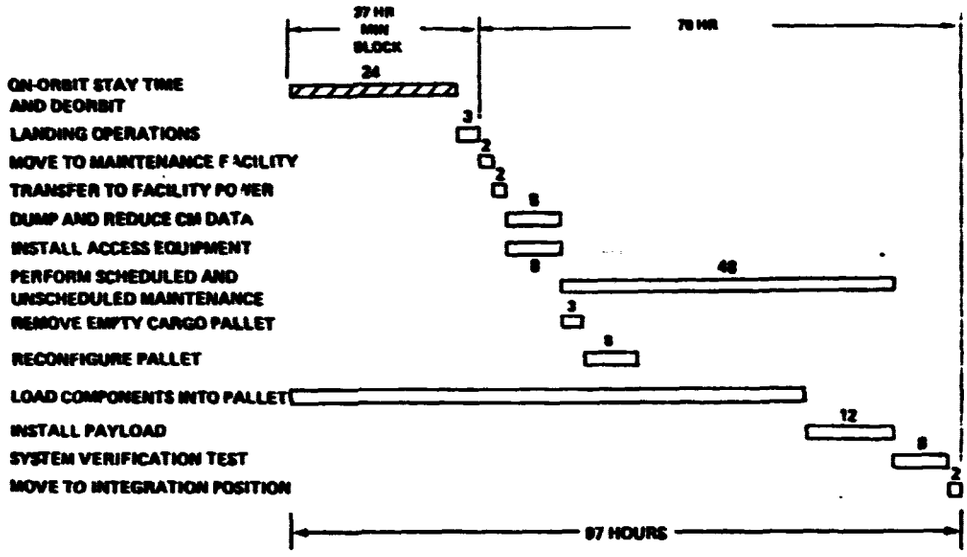

Figure 6-10. HLLV Orbiter Processing Timeline

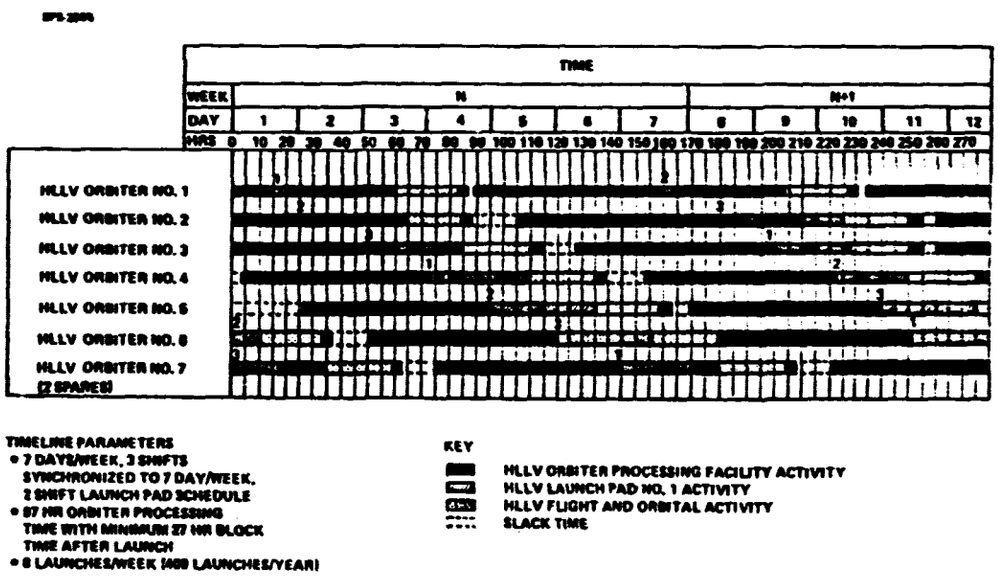

Figure 6-11. HLLV Orbiter Processing Operations

WBS 1.3.7.2.3HLLV Booster Processing Facility and Operations

WBS Dictionary

This element includes the design and construction of the HLLV Booster Processing Facility and its equipment and operations.

Element Description

The HLLV Booster Processing Facility (HBPF) is shown in Figure 6-12.

The HLLV booster is backed into a vacant bay by the towing vehicle. The vehicle will be parked in a precise location and it will be leveled by leveling jacks as required. The vehicle will be transferred to facility power and services by connecting one or more umbilicals. Service platforms will then be moved into position around the vehicle.

The general maintenance cycle was shown in Figure 6-9.

The processing operations timeline for a single HLLV booster is shown in Figure 6-13. The integrated timeline for 6 boosters is shown in Figure 6-14. A 7 day per week, 3 shifts per day schedule is selected.

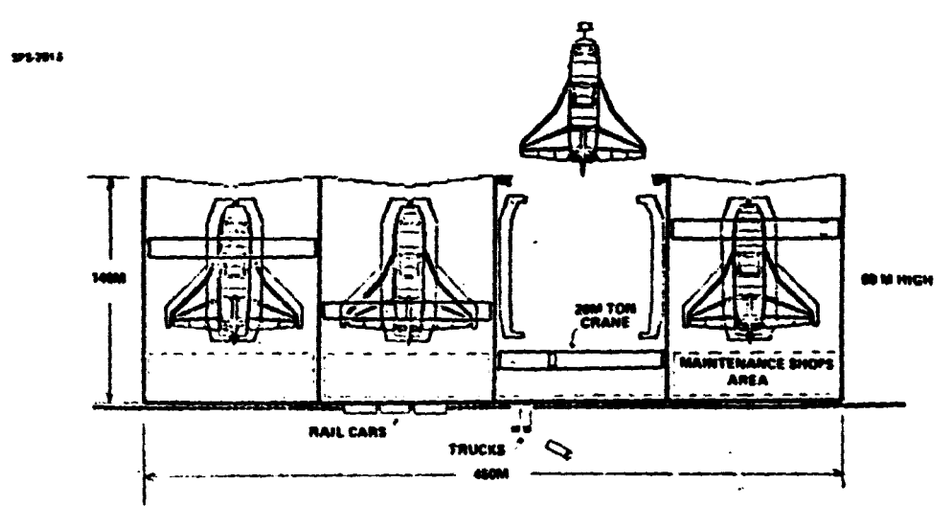

Figure 6-12. HLLV Booster Processing Facility

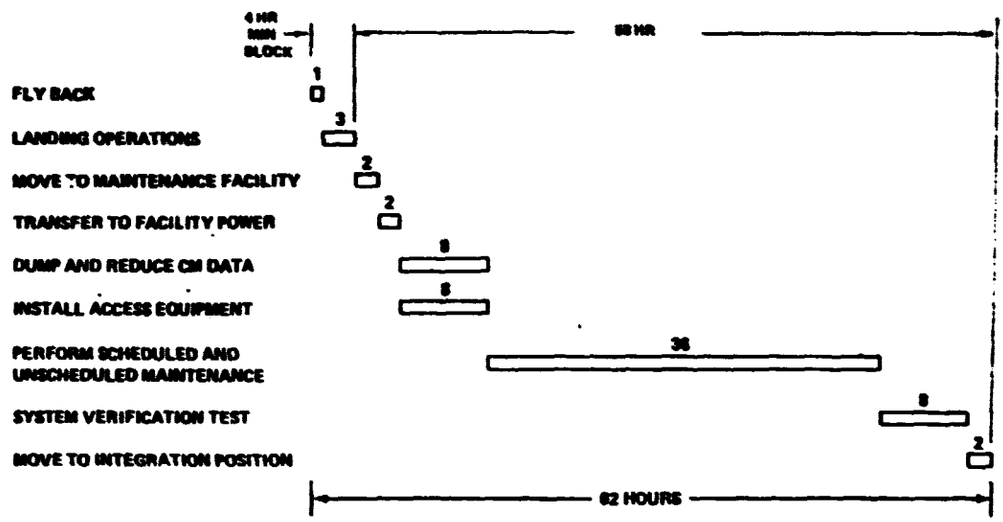

Figure 6-13. HLLV Booster Processing Timelines

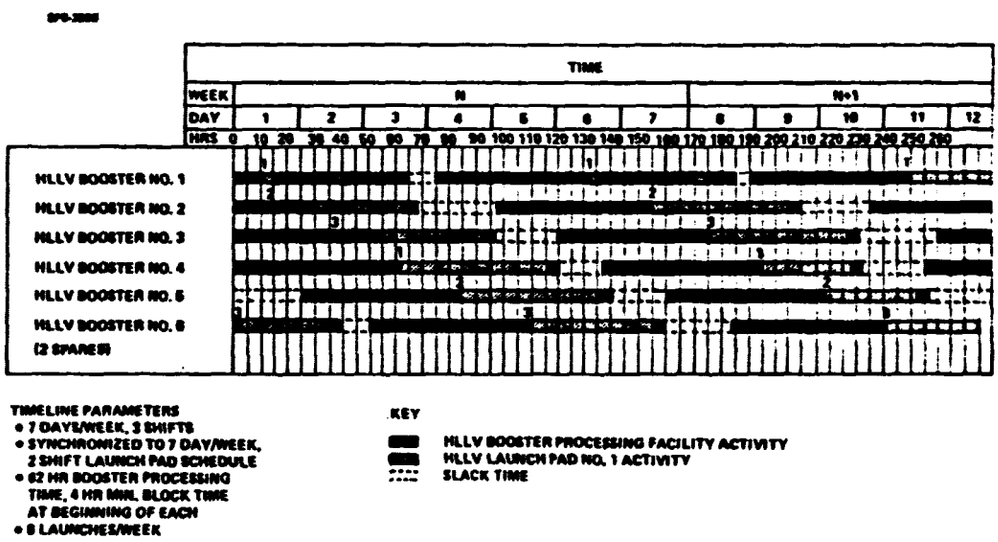

Figure 6-14. HLLV Booster Processing Operations

WBS 1.3.7.2.4 Engine Maintenance Facility

WBS Dictionary

This element includes the design and construction of the engine maintenance facility, its equipment and operations.

Element Description

The HLLV booster and orbiter main engines will be overhauled in this facility. There will be separate work areas for each engine type.

This facility has not been sized.

WBS 1.3.7.2.5 Hypergolic Maintenance Facility

WBS Dictionary

This element includes the design and construction of the facilities used to maintain the hypergolic propulsion system and the equipment and operations associated with this facility.

Element Description

This facility has not been configured.

WBS 1.3.7.2.6 Passenger Offloading Facility

WBS Dictionary

This element includes the design and construction of the PLV Passenger Offloading Facility, its equipment and operations.

Element Description

A facility, such as shown in Figure 6-15, will be required adjacent to the landing field. This facility is used to offload the 75 passengers carried within the passenger module in the PLV Orbiter cargo bay.

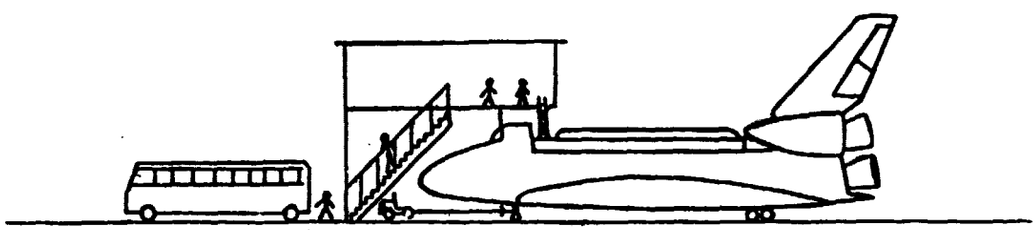

Figure 6-15. Passenger Offloading Facility

WBS 1.3.7.2.7 PLV Booster Processing Facility and Operations

WBS Dictionary

This element includes the design and construction of the PLV Booster Processing Facility and its equipment and operations.

Element Description

It is assumed that the PLV will be the Shuttle-Growth vehicle. Therefore, the PLV Booster Processing Facility will be the Shuttle-Growth Booster Processing Facility.

The Shuttle-Growth Booster Processing Facility will be sized to accommodate 1) 2 vehicles dedicated to the PLV mission, 2) N vehicles dedicated to other missions, and 3) at least 1 vehicle undergoing major overhaul. It will be assumed that this processing facility will contain 5 bays and will be 340m long, 100m wide, and 50m high. This facility will be equipped with 5 20m ton cranes.

The PLV Booster processing operations will be similar to those described for the HLLV Booster (WBS 1.3.7.2.3). It has been assumed that the total turnaround time for the PLV is 10 days. A large percentage of this time will be devoted to the Booster processing operations. A detailed timeline has not been developed.

WBS 1.3.7.2.8 PLV Orbiter Processing Facility and Operations

WBS Dictionary

This element includes the design and construction of the space Shuttle Orbiter Processing Facility (OPF) and its equipment and operations that are dedicated to the PLV mission.

Element Description

It is assumed that the PLV orbiter will be a Shuttle Orbiter. Therefore, the PLV Orbiter Processing Facility will be the Shuttle Orbiter Processing Facility (OPF).

The OPF will have to be enlarged to accommodate 2 Orbiters dedicated to the PLV mission in addition to those required for other missions.

The Orbiter processing operations are detailed in several Space Shuttle program documents.

WBS 1.3.7.2.9 Vertical Assembly Building

WBS Dictionary

This element includes the design and construction of the Vertical Assembly Building (VAB) and its equipment and operations dedicated to the PLV mission.

Element Description

The PLV will be assembled in the VAB on the Mobile Launcher Platform (WBS 1.3.7.2.10). The Shuttle-growth booster will be towed from its processing facility

to the VAB where it will be hoisted to its tail-down orientation and then attached to the MLP. The Orbiter will be towed to the VAB from the OPF and it will be hoisted to its mating position on top of the Booster.

No PLV dedicated modifications to the VAB have been identified.

WBS 1.3.7.2.10 Mobile Launcher Platform

WBS Dictionary

This element includes the design and construction of the Mobile Launcher Platform (MLP) and its equipment and operations dedicated to the PLV mission.

Element Description

It is assumed that the MLP will be modified to accommodate the Shuttle-growth vehicle. No PLV-dedicated changes have been identified.

WBS 1.3.7.3 Fuel Facilities

WBS Dictionary

This element includes fuel production, facilities, storage and handling facilities, transportation, delivery and safety facilities for both the fuel and the oxidizer. Also included are the facilities for fuels used in the various orbital transfer facilities.

Element Description

The fuel facilities, storage, handling, transportation, etc. has not been examined in detail. The general concept is identified in the following paragraphs.

Fuel Production Facilities -- No on-site fuel production facilities are planned.

Fuel Storage and Handling Facilities -- Tank farms and reliquification plants for LO_2, LH_2, and Liquid Argon will be required. A tank farm for LCH_4 will also be required.

Fuel Transportation Systems -- The fuel and oxidizers will be delivered to KSC via ship, barge, tank cars, and pipelines.

Fuel Delivery Systems -- The various propellants will be delivered to the launch pads via pipelines from the various tank farms. The propellants (Liquid Argon, LO_2, LH_2) to be loaded into the POTV and EOTV Propellant Pallets will be delivered to the HLLV launch pads via pipeline. The propellants will be pumped into the pallets via umbilical fluid lines from the launch servicing tower.

WBS 1.3.7.4 Logistic Support

WBS Dictionary

This element includes the land, buildings and handling equipment for the receiving, inspection, storage and packaging of all payloads to be launched except for fuels and oxidizers.

Element Description

The SPS and EOTV construction components will be delivered to KSC via truck, rail, and sea. The truck and rail deliveries go directly to the HLLV Orbiter and Payload Processing Facility (WBS 1.3.7.2.2). At this time, no intermediate storage or processing facilities have been identified. Payloads too large for truck or rail delivery (e.g., slipring assembly, antenna subarrays, etc.) will be delivered to KSC via ships or barges. These vessels will be docked at a ship and barge basin to be constructed near the launch pad areas (see Figure 6-3). Some storage facilities may be located adjacent to the basin. The cargo would be delivered from the ship basin to the HLLV Orbiter and Payload Processing Facility via the railroad system or via surface roads using large wheeled or crawler-type vehicles.

WBS 1.3.7.5 Operations

WBS Dictionary

This element includes all land, buildings and equipment required to support the various crews. It also includes the required control centers and administrative facilities.

Element Description

A Launch and Recovery Site Operations Facility (LRSOF) will be required. This facility will house the equipment and personnel required to manage all of the SPS operations at the base.

Table 6-2 lists the launch and recovery site command and control tasks. Figure 6-16 shows a tentative command and control functional organization. Each of the sub-functional groups are described below.

Launch and Recovery Site Command Center -- This is the top-level C&C organization. It will be composed of the SPS Base Director and his staff. This organization is responsible for coordinating and integrating the activities of the second-level C&C groups.

Landing Site C&C Group -- This group is responsible for conducting all of the SPS vehicle landing site operations. Figure 6-17 shows the C&C interfaces required by this group.

Payload Processing C&C Group -- This group is responsible for all operations associated with receiving, storing, distributing, and packaging the cargo destined for the orbital bases. Figure 6-18 shows the C&C interfaces required by this group.

HLLV Processing C&C Group -- This group is responsible for all operations associated with maintaining the HLLV Orbiters and HLLV Boosters. Figure 6-19 shows the C&C interfaces required by this group.

TABLE 6-2

COMMAND AND CONTROL TASKS

LOCATION/OPERATION: LAUNCH AND RECOVERY SITE

FUNCTION/TASKS	COMMAND AND CONTROL TASKS	INTERFACE INTERNAL	INTERFACE EXTERNAL
o Provide coordination and planning of SPS ground support operations	o Receive status reports from sub-functional C & C groups	*	
	o Receive SPS program constraints and master schedule from top-level C & C group		*
	o Coordinate sub-functional C & C group activities	*	
	o Coordinate SPS ground support operations with non-SPS launch and recovery site operations	*	
	o Coordinate SPS ground support operations with external SPS C & C operations		*
	o Provide SPS ground support operations status reports to top level C & C group		*
o Provide Landing Site C & C	o Receive vehicle flight schedules	*	
	o Receive vehicle status reports	*	
	o Coordinate SPS vehicle landing operations with launch and recovery site landing site C & C group.		*

Page 1 of 7

TABLE 6-2 (Cont.)

FUNCTION/TASKS	COMMAND AND CONTROL TASKS	INTERFACE INTERNAL	INTERFACE EXTERNAL
	o Monitor and control the Passenger Offloading Facility o availability o maintenance o operations	*	
	o Coordinate ground transportation for returning space crews		*
o Provide HLLV Payload Processing C & C	o Receive vehicle specific payload manifests and schedules		*
	o Receive cargo shipping schedule		*
	o Provide payloads status reports to upper-level C & C group		*
	o Monitor cargo delivery status	*	
	o Provide inventory control	*	
	o Coordinate inter-base carge transportation requirement	*	

TABLE 6-2 (Cont.)

FUNCTION/TASKS	COMMAND AND CONTROL TASKS	INTERFACE INTERNAL	INTERFACE EXTERNAL
	o Monitor/control cargo pallet refurbishment/reconfiguration operations		
	o Monitory/control cargo pallet loading operations		
	o Monitor/control cargo storage & cargo handling equipment o availability o scheduleing/dispatching o crew		
	o Monitor/control cargo handling personnel * o assignments o scheduling o training		
	o Provide cargo handling facilities, equpment, and personnel status reports to upper level C & C group		
o Provide HLLV Processing C & C	o Receive HLLV master schedule		*
	o Receive HLLV maintenance plans		*

Page 3 of 7

TABLE 6-2 (Cont.)

FUNCTION/TASKS	COMMAND AND CONTROL TASKS	INTERFACE INTERNAL	INTERFACE EXTERNAL
	o Provide HLLV status reports to upper level C & C group		*
	o Coordinate intra-base HLLV stages transportation requirements	*	
	o Monitor/control HLLV Booster Processing Facility, HLLV orbiter Processing Facility, Engine Maintenance Facility, and Hyprgolic Maintenance Facility o Facility utilities o status o requirements o Facility equipment o status o availability o maintenance o consumable o scheduling o Facility personnel o scheduling o training o assignments o Facility operations	*	
o Provide PLV Processing C & C	o Receive PLV master schedule		*
	o Receive PLV maintenance plans		*

TABLE 6-2 (Cont.)

FUNCTION/TASKS	COMMAND AND CONTROL TASKS	INTERFACE INTERNAL	INTERFACE EXTERNAL
	o Receive PLV status reports		* to upper level C & C group
	o Coordinate intra-base PLV stages transportation requirements	*	
	o Coordenate PLV processing requirements with the STS		*
	o Monitor/control PLV passenger module processing o maintenance o consumables o availability o scheduling	*	
o Provide HLLV Launch C & C	o Receive HLLV launch master schedule		*
	o Provide HLLV launch status reports to upper level C & C groups		*
	o Coordinate HLLV stage delivery schedule with processing facilities and surface transportation groups		*
	o Monitor/control HLLV launch pads o Maintenance o Utilities o Crews	*	

Page 5 of 7

TABLE 6-2 (Cont.)

FUNCTION/TASKS	COMMAND AND CONTROL TASKS	INTERFACE INTERNAL	INTERFACE EXTERNAL
	o Provide HLLV launch C & C o Integration o Site support sources (EGS, IWS, Primary Power) o Range safety o Site mechanical (Saving arm, TSM, hydraulics, etc.) o Cyrogenics o Non-cyrogenics o Instrumentation, communications, tracking o GN&C, Power o Payloads o LPS Master	*	
o Provide Propellant Handling Systems C & C	o Receive, propellant requirements, receiving, and delivery schedule		*
	o Provide propellant handling systems status reports to upper level C & C group		*
	o Monitor propellant incoming delivery status		*
	o Monitor/Control propellant receiving storage, and reliquification facilities, and propellant delivery systems o availability o maintenance o inventory	*	

Page 6 of 7

TABLE 6-2 (Cont.)

FUNCTION/TASKS	COMMAND AND CONTROL TASKS	INTERFACE INTERNAL	INTERFACE EXTERNAL
o Provide Space Crews Services C & C	o Receive master schedule		*
	o Report space crew status to upperlevel C & C group		*
	o Monitor/control	*	
	o Temporary housing		
	o Medical services		
	o Crew transportation		
	o Crew safety		
	o crew supplies		

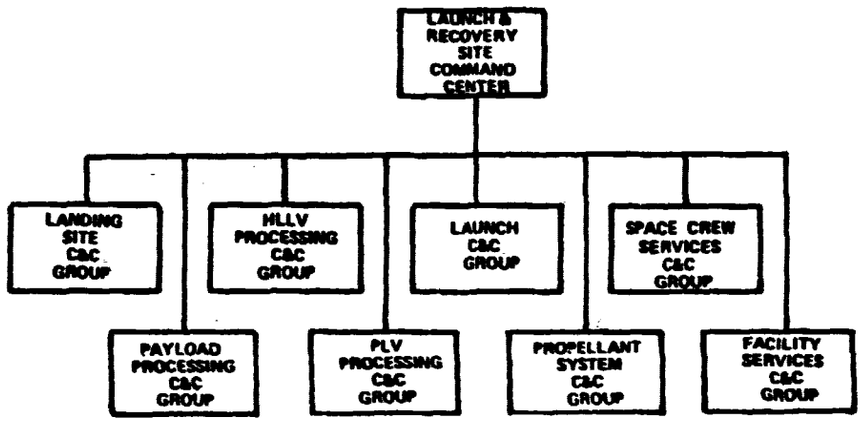

Figure 6-16. Launch and Recovery Site Command and Control Functional Organization

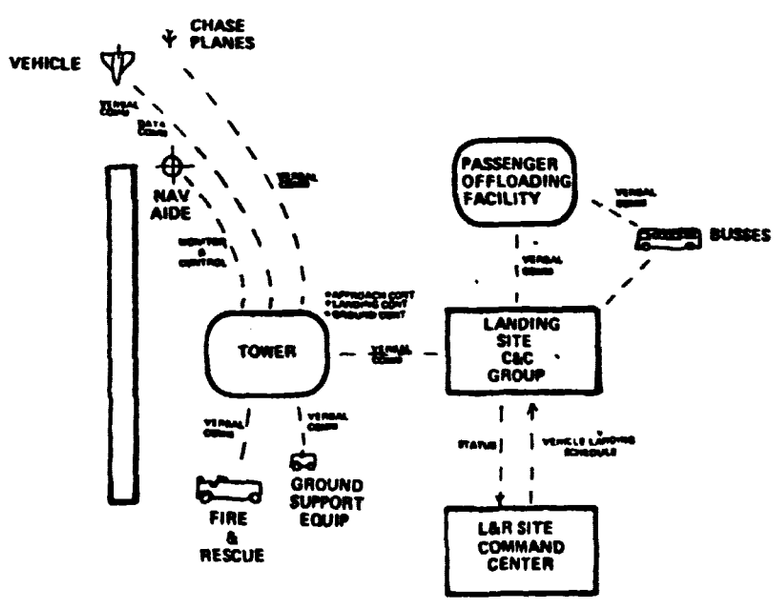

Figure 6-17. Landing Site Command and Control Group Interfaces

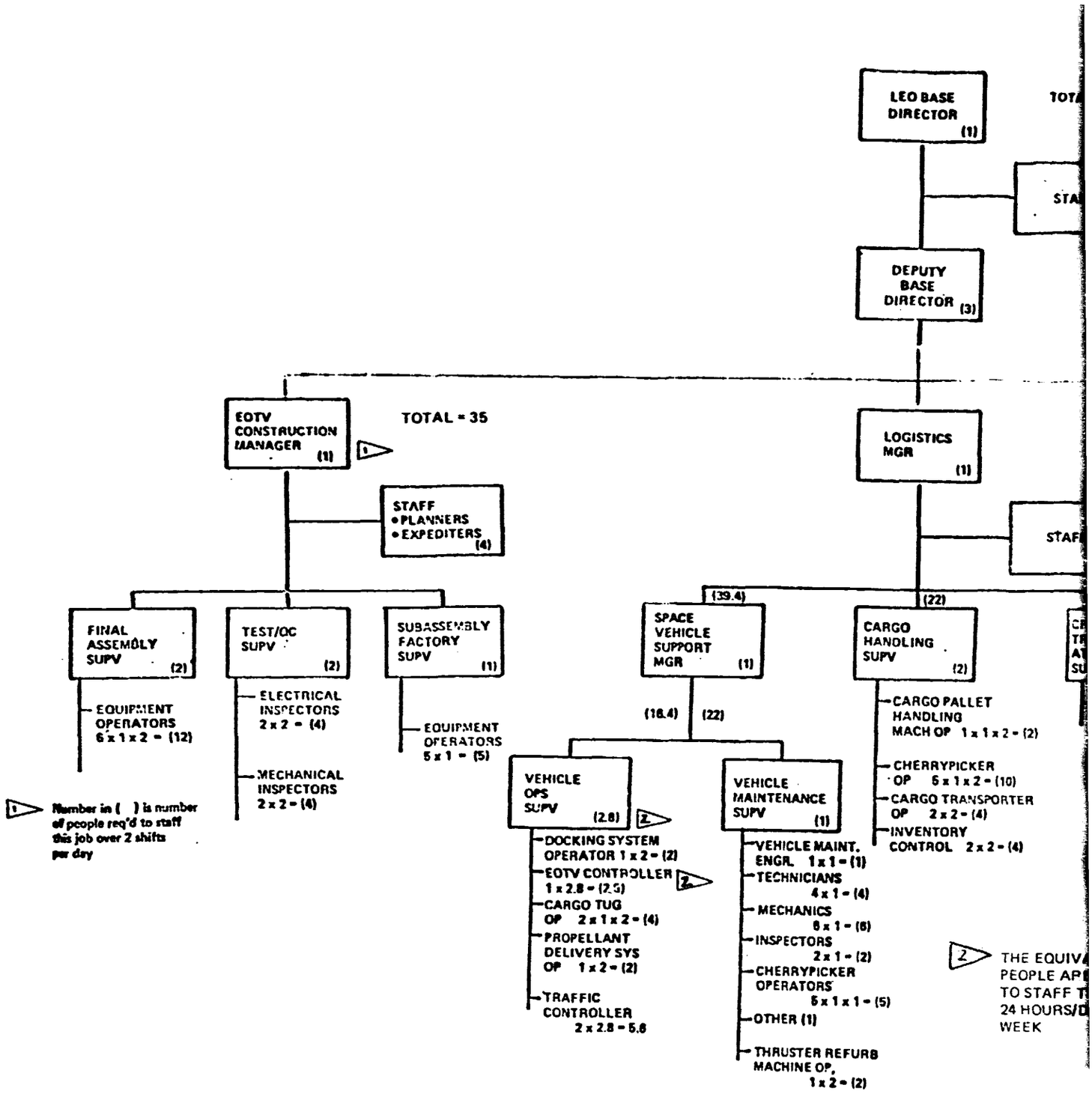

FOLDOUT FRAME 1

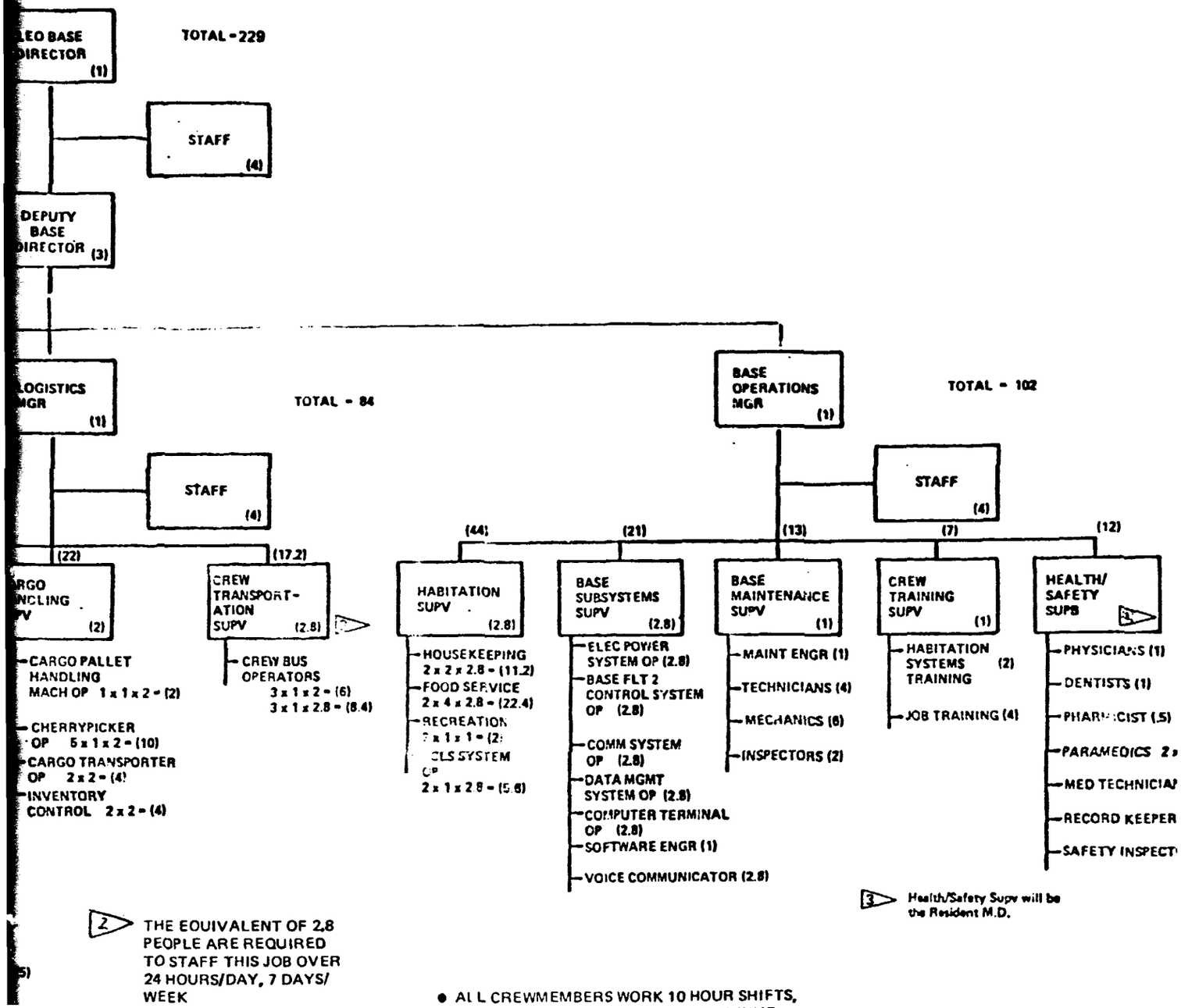

- ALL CREWMEMBERS WORK 10 HOUR SHIFTS, 6 DAYS ON/1 DAY OFF, 90 DAY STAYTIME
- AN EQUIVALENT CREW SIZE IS ON EARTH RECEIVING TRAINING, ON LEAVE, ETC.

FOLDOUT FRAME 2

Figure 9-40. LEO Base Crew Size and Organizatio

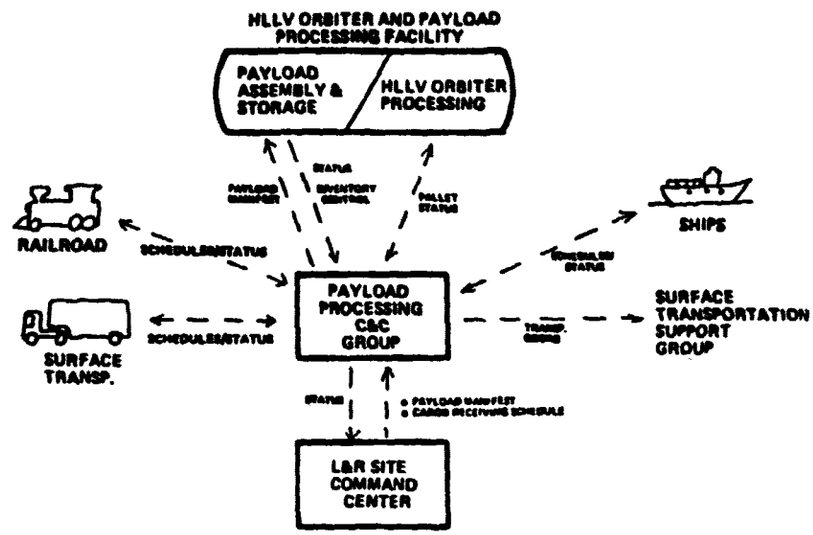

Figure 6-18. Payload Processing Command and Control Group Interfaces

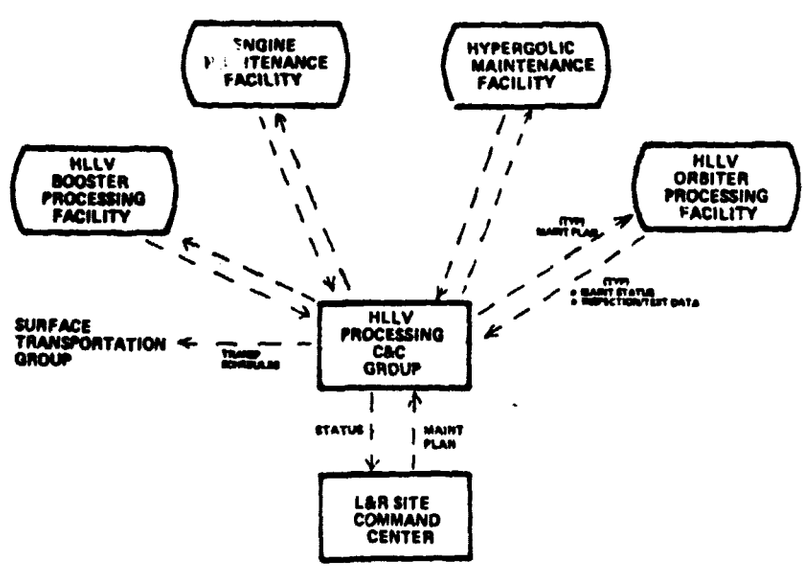

Figure 6-19. HLLV Processing Command and Control Group Interfaces

PLV Processing C&C Group -- This group is responsible for coordinating the PLV turnaround operations. This will require an interface with the STS groups responsible for maintaining and assembling the Shuttle-Growth vehicle. Figure 6-20 shows the command and control interfaces required by this group.

Launch C&C Group -- This group is responsible for all of the HLLV launch operations and for coordinating the PLV launch operations with the STS launch center. Figure 6-21 shows the command and control interfaces required by this group. Figure 6-22 shows a conceptual layout of the HLLV Launch Control Room.

Propellant Systems C&C Group -- This group is responsible for all of the propellant receiving, storage, conditioning, and delivery operations associated with the HLLV operations. This includes the propellants required by the POTV, EOTV, and Cargo Tugs that will be delivered by the HLLV. The group will have an interface with the STS propellant systems group to coordinate PLV propellant requirements. The command and control interfaces required by this group are shown in Figure 6-23.

Space Crew Services C&C Group -- This group is responsible for managing all of the space crew service operations at the base. This includes coordination of crew schedules, PLV schedules, pre-flight and post-flight medical services, crew safety operations, etc. The command and control interfaces for this group are shown in Figure 6-24.

Facility Services C&C Group -- This group is responsible for coordinating and implementing SPS facilities services within the framework of the KSC facilities services. Typical operations include surface transportation and building maintenance.

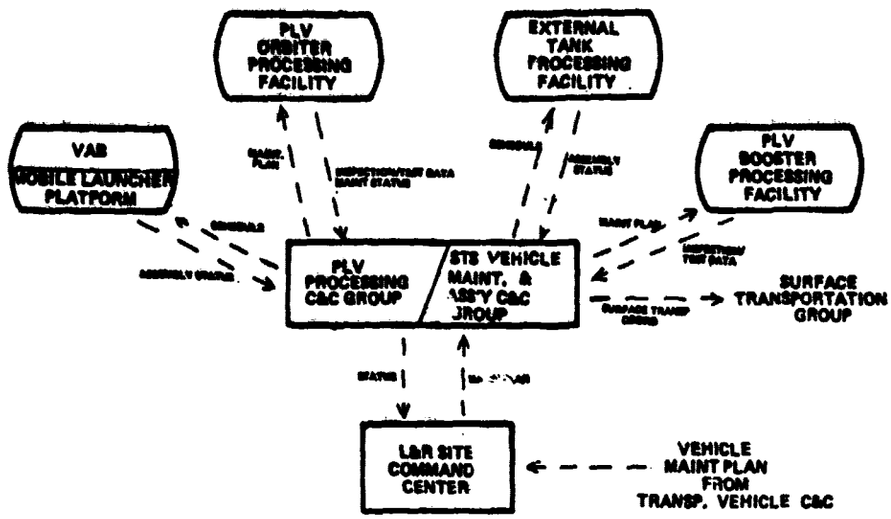

Figure 6-20. PLV Processing Command and Control Group Interfaces

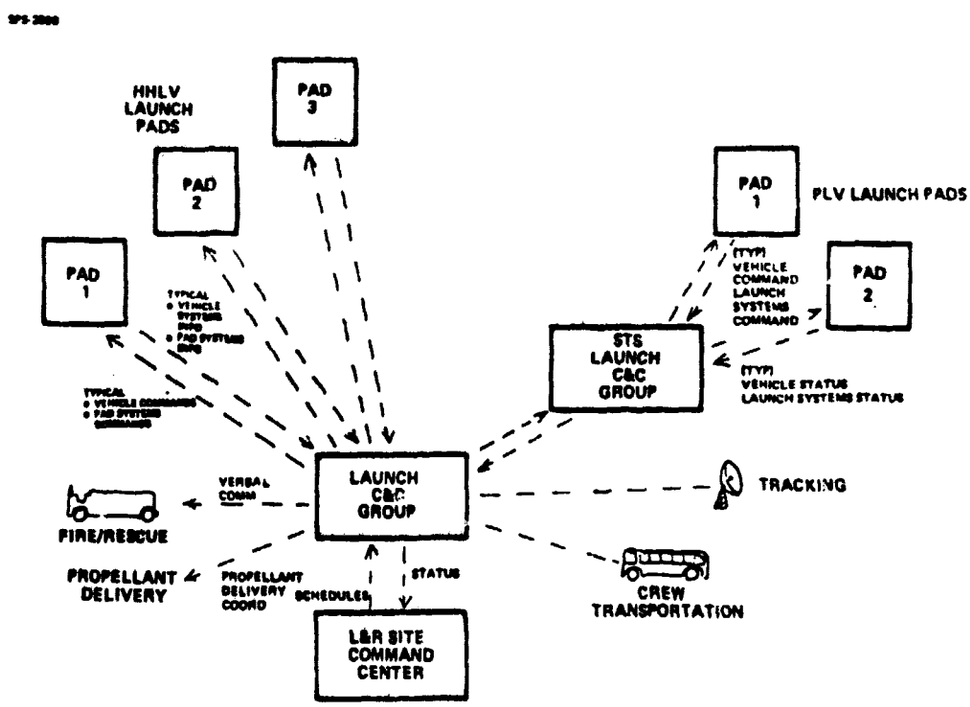

Figure 6-21. Launch Command and Control Group Interfaces

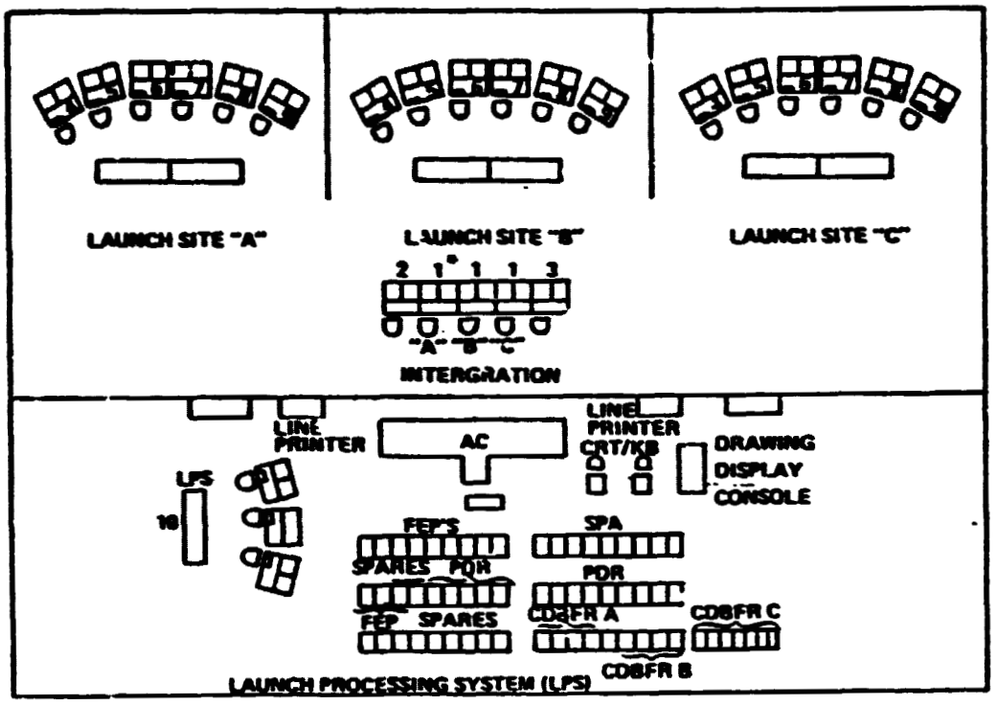

LEGEND

CDBFR	COMMON DATA BUFFER
SPA	SHARED PERIPHERAL
FEP	FRONT END PROCESSOR
PDR	PROCESS DATA RECORDER
AC	AIR CONDITIONER
RDR	RAW DATA RECORDER

1. INTEGRATION
2. SITE SUPPORT SOURCES (EGS, IWS, PRI. PWR.)
3. RANGE SAFETY
4. SITE MECHANICAL (SWING ARM, TSM, HYDRAULICS)
5. CRYOGENICS, LH_2/RP-1
6. CRYOGENICS, LO_2
7. INSTR., COMM., TRACKING
8. GN & C, PWR
9. PAYLOADS
10. LPS MASTER

Figure 6-22. HLLV Launch Control Center

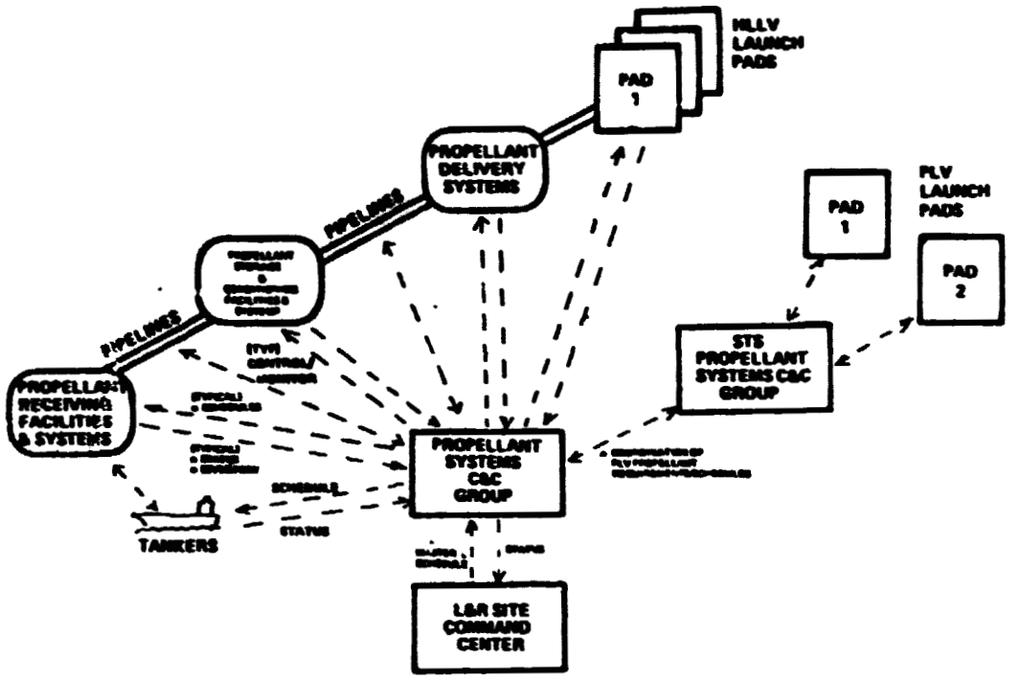

Figure 6-23. Propellant Systems Command and Control Group Interfaces

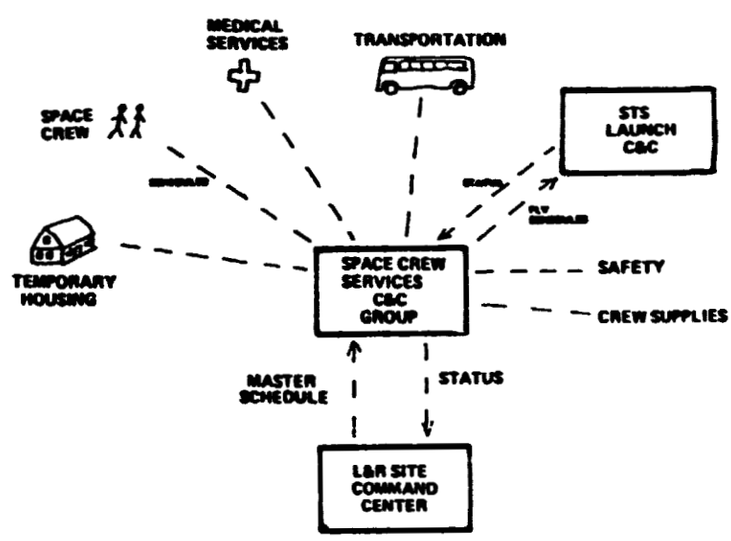

Figure 6-24. Space Crew Services Command and Control Group Interfaces

SECTION 7
PERSONNEL TRANSPORTATION OPERATIONS

		Page
1.0	Introduction	7-1
2.0	Requirements	7-1
2.1	Personnel Transportation Requirements	7-1
2.2	Supply Transportation Requirements	7-1
3.0	Personnel Transportation System Elements	7-2
3.1	Personnel Launch Vehicle (PLV)	7-2
3.2	Personnel Orbital Transfer Vehicle (POTV)	7-3
3.3	Crew Busses	7-4
4.0	Personnel Transportation Support Systems and Operations	7-5
4.1	Launch and Recovery Site Systems and Operations	7-5
4.2	Orbital Bases Systems and Operations	7-6
4.3	Command and Control Systems and Operations	7-10

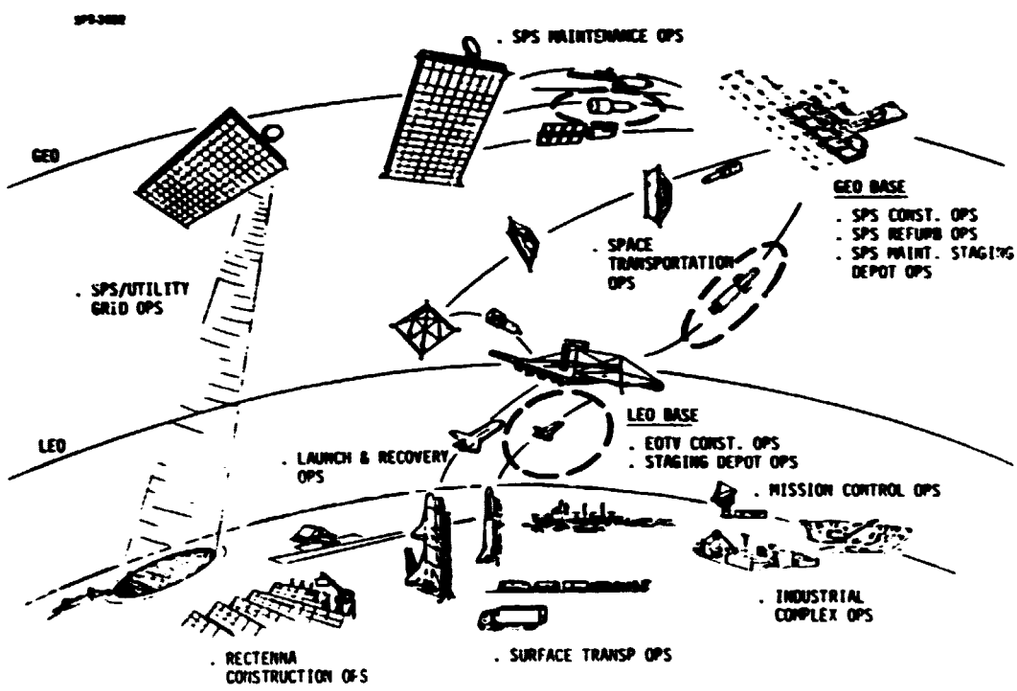

SECTION 7
PERSONNEL TRANSPORTATION OPERATIONS

1.0 INTRODUCTION

This section will discuss the personnel transportation systems and operations. The personnel and crew supplies transportation requirements are identified first. The transportation vehicles are then described. This is followed with a discussion of the personnel and crew supplies handling operations commencing with the ground operations. The orbital operations and the command and control operations are then discussed.

2.0 REQUIREMENTS

2.1 PERSONNEL TRANSPORTATION REQUIREMENTS

During the 12th year of commercial operations, there will be approximately 1000 crewmembers in space. This total crew size is changed out four times each year. The regular LEO Base crew size is 200 with 35 additional people required during EOTV construction operations. (Refer to Section 9.0 for derivation of the LEO Base crew size.) The GEO Base crew size remains constant at 444 after the 2 satellites per year construction rate is achieved early in the program. (Refer to Section 12.0 for derivation of GEO Base crew size). The maintenance crew is composed of approximately 385 people. (Refer to Section 13.0 for definition of crew size requirements.)

2.2 CREW SUPPLIES TRANSPORTATION REQUIREMENTS

For bookkeeping purposes, the crew-related supplies were placed into two categories: 1) food and personal effects, and 2) everything else--ECLS gases, water, ECLS and other subsystem spares, clothing, and all other non-perishable crew supply items. This split was created as the food will be transported to GEO by the most expeditious transportation vehicle while the non-perishable items can be transported in bulk by the slower, more economical cargo vehicles.

The food and personal effects mass per man year was computed to be 1.7 MT/year per man. (See Section 12 of this book for the analysis leading to this number.)

The LEO Base crew facilities and work facilities supplies requirements is 400 MT/yr (see WBS 1.3). The GEO Base crew facilities, work facilities, and supplies requirement is 1251 MT/year. (See WBS 1.3)

The crew and work facilities supplies required for the SPS maintenance operations is 206 MT/year (see WBS 1.3) when 20 satellites are operational.

3.0 PERSONNEL TRANSPORTATION SYSTEM ELEMENTS

3.1 PERSONNEL LAUNCH VEHICLE (PLV) (WBS 1.3.3)

The PLV, shown in Figure 7-1, is used to transport personnel between the Earth and the LEO Base. This vehicle is derived from the current space shuttle system. The orbiter carries a 75-man passenger module. The modified external tank is an expendable element. Both the booster and the orbiter are flyback vehicles.

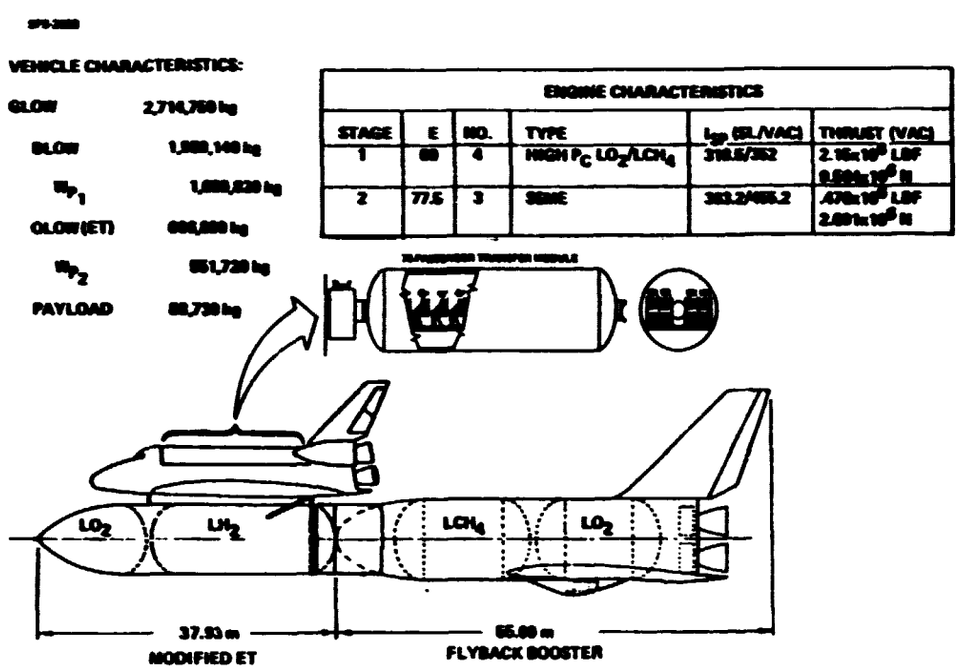

Figure 7-1. Shuttle Derived PLV

3.2 PERSONNEL ORBITAL TRANSFER VEHICLE (POTV) (WBS 1.3.4 AND 1.3.5)

The POTV, shown in Figure 7-2 is used to transfer personnel and crew supplies between the LEO and GEO bases. This vehicle is composed of an OTV booster (see WBS 1.3.4), a 75-man passenger module (see Figure 7-3), and a crew supply module, (see Figure 7-4. This vehicle is refueled at both bases - i.e., it makes a one-way trip between refuelings

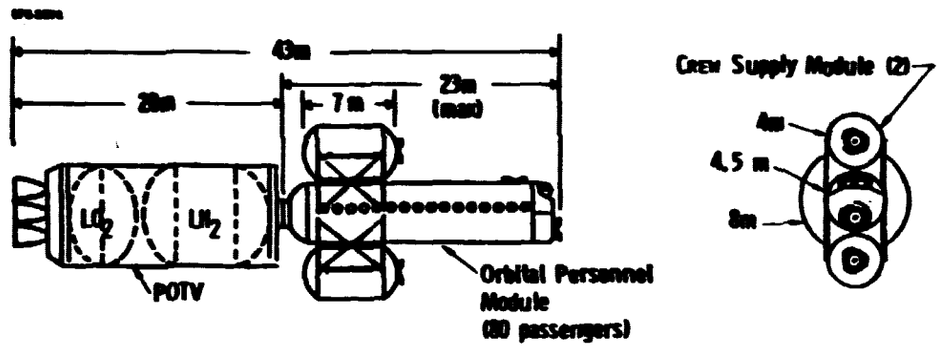

Figure 7-2. Personal Orbital Transfer Vehicle (POTV)

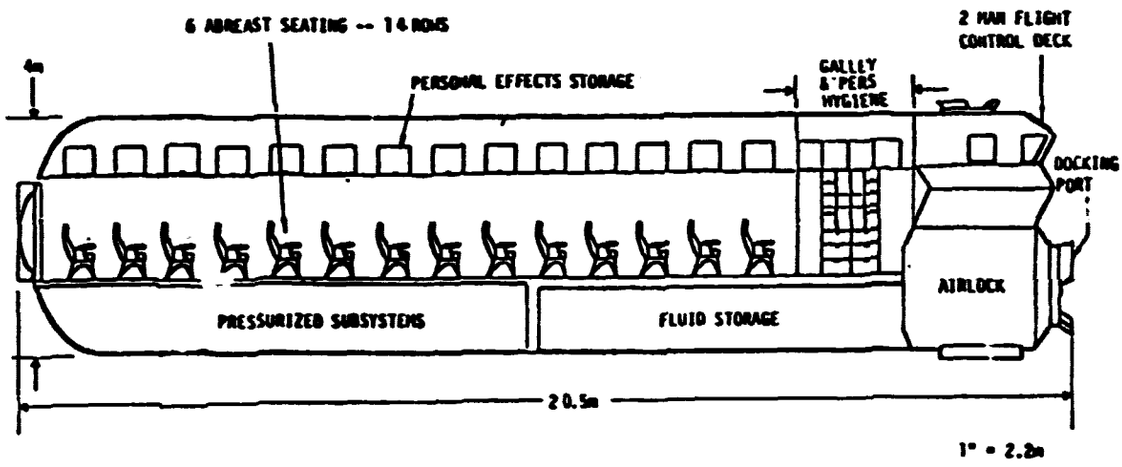

Figure 7-3. Orbital Personnel Module

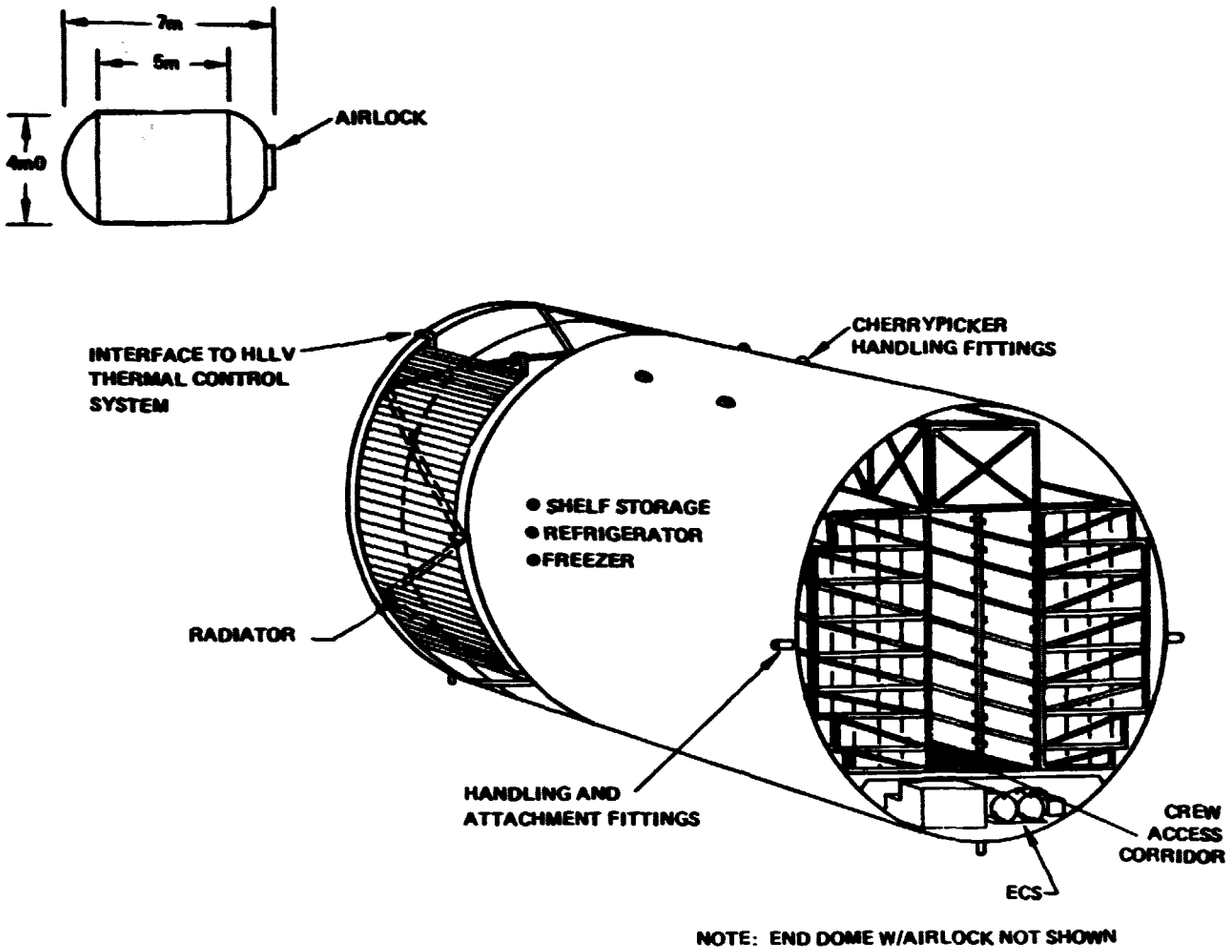

Figure 7-4. Supply Module

3.3 CREW BUSSES

The crewmembers at the LEO and GEO Bases and at the satellites are transported on rail-mounted crew busses. Two sizes of crew busses have been defined—a 24-man bus and a 10-man bus. Figure 7-5 illustrates a crew bus concept. This bus is equipped with a transfer capsule that is used to transfer crewmen between the bus and equipment control cabins that cannot interface directly with the crew bus main access airlock.

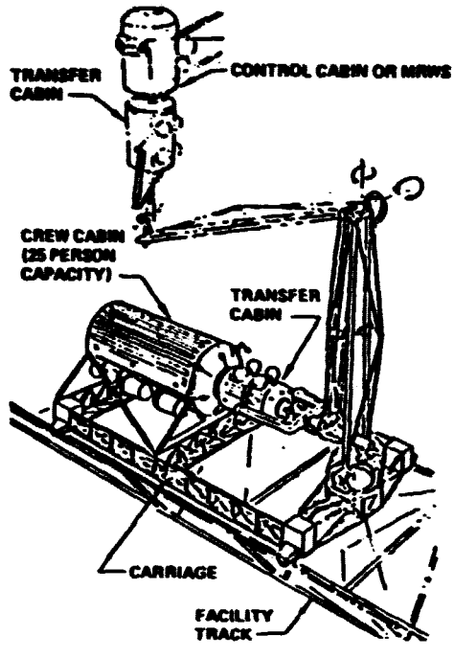

Figure 7-5. WBS 1.2.1.1.3.7 Crew Bus

4.0 PERSONNEL TRANSPORTATION SUPPORT SYSTEMS AND OPERATION

4.1 LAUNCH AND RECOVERY SITE SYSTEMS AND OPERATIONS

Every orbital crewmember will be assigned a specific PLV flight. The 75 people designated for a specific flight would be marshalled at the launch site at least a day in advance for processing. On the day of their launch, the crewmembers would report to a Crew Transportation Center where they would be loaded onto busses for the trip to the PLV launch pad. At the pad, see Figure 7-6, they disembark the busses and take an elevator to the passenger loading level of the service gantry. The crewmembers move to their designated seat in the passenger Module located within the payload bay of a shuttle orbiter.

The PLV then goes through the remainder of its prelaunch countdown operations. The vehicle is launched, the booster separates and flies back to the recovery site, and the Shuttle/External Tank continues onward. Prior to reaching orbit, the external tank is jettisoned. The orbiter continues on to the LEO Base.

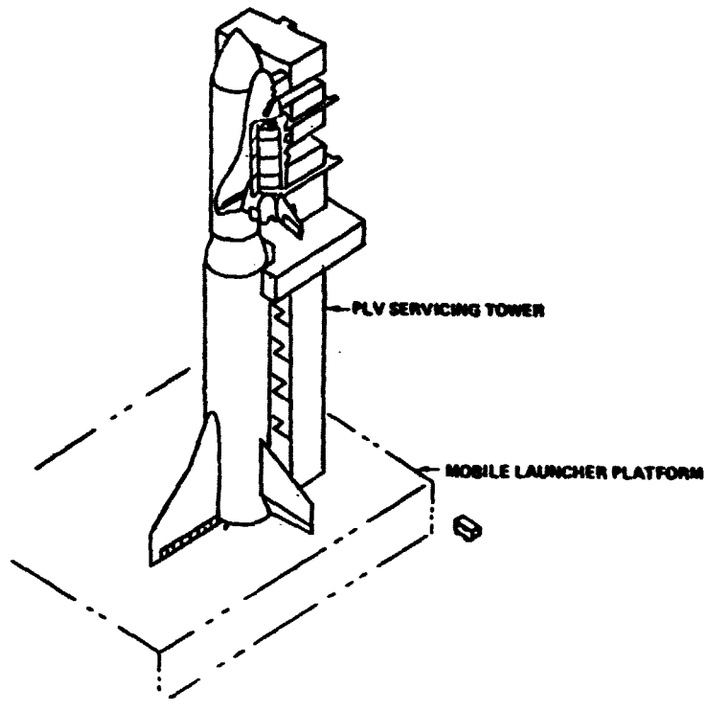

Figure 7-6. PLv Launch Pad

On the return trip, 75 passengers are brought back to Earth. After the flyback landing of the Shuttle the passengers are disembarked from the Passenger Module at a dedicated facility, see Figure 7-7. The crewmembers are returned by bus to the Crew Transportation Center where they are processed for their release for a 90 day R&R and retraining period.

The supply modules are loaded with food and priority cargo (see Figure 7-8) at the HLLV Orbiter and Payload Processing Facility (WBS 1.3.7.2.2). These modules are then integrated into HLLV cargo pallets for delivery to the LEO Base.

4.2 ORBITAL BASE SYSTEMS AND OPERATIONS

There are four major personnel transportation support sytems at the LEO Base: 1) the PLV docking system, 2) the POTV docking and launching system, 3) the crew busses, and 4) the transient crew quarters.

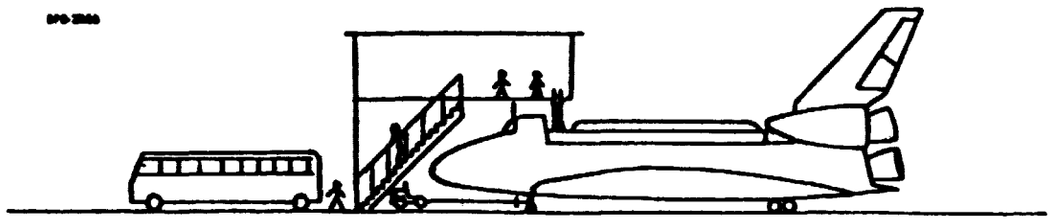

Figure 7-7. Passenger Offlanding Facility

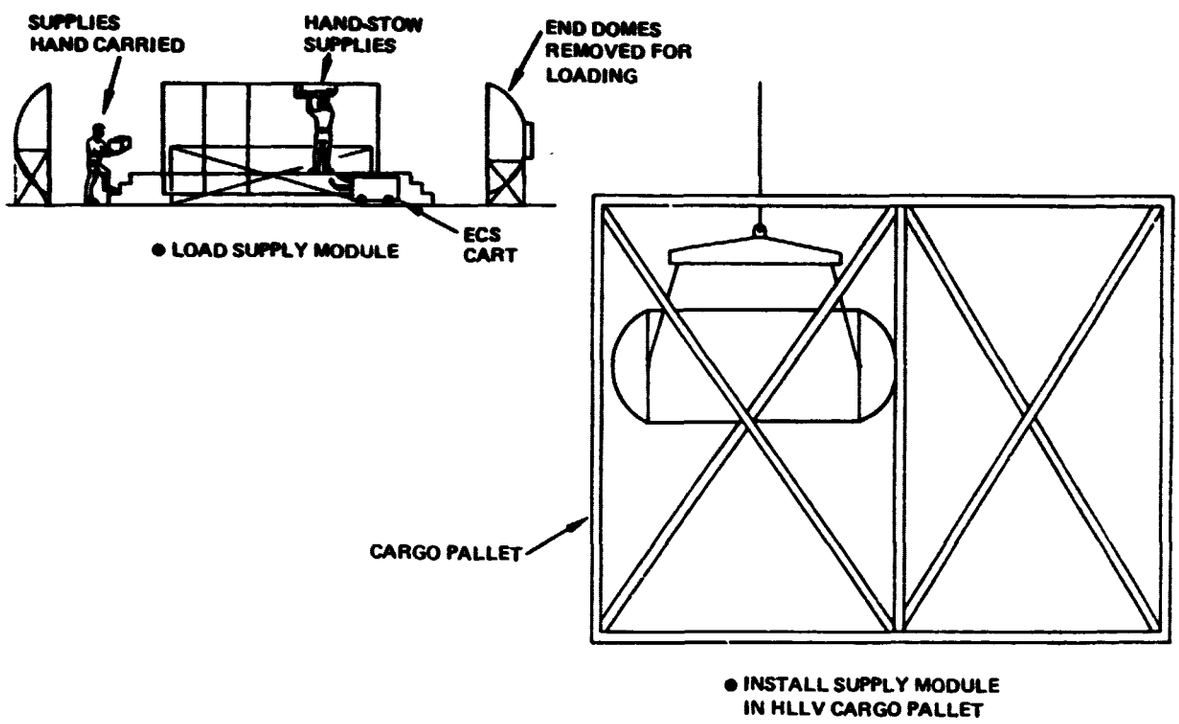

Figure 7-8. Supply Module Loading at Launch Site

The PLV docking system (WBS 1.2.2.1.6) is shown in Figure 7-9. The system is composed of a framework on which is attached a primary docking boom, two secondary docking booms, and a crew transfer tunnel. The figure describes the operational sequence that is used to achieve docking of the PLV.

The PLV passengers are transferred to a crew bus via the crew transfer tunnel system shown in Figure 7-10. The crew busses transport the passengers to LEO Base crew habitats (if they are LEO Base crewmembers) or to a transient crew quarters module (if they are GEO Base crewmembers).

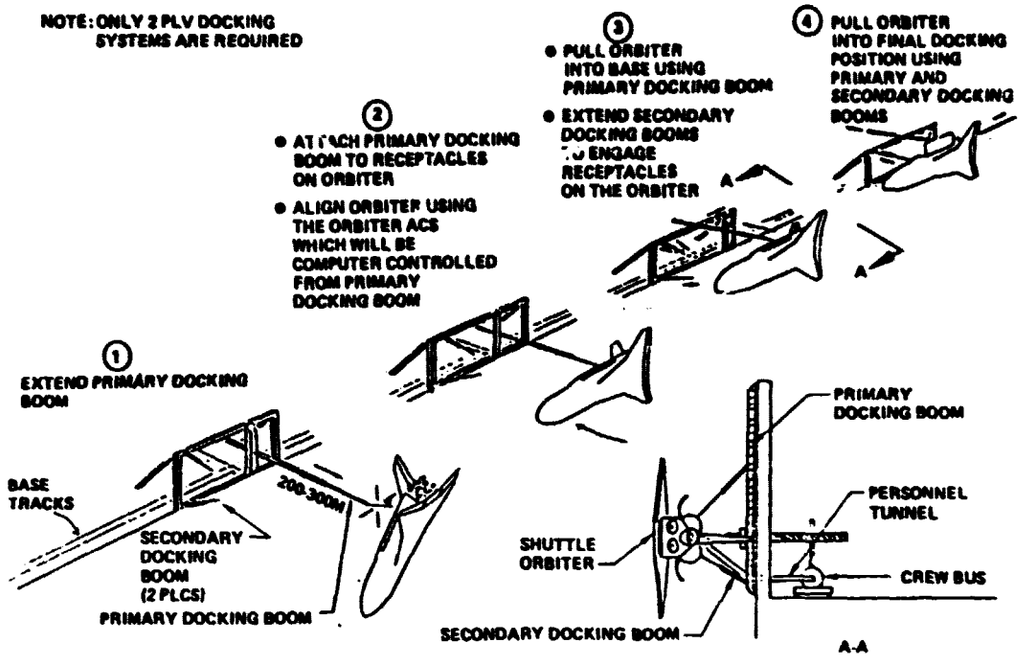

Figure 7-9. PLV Docking Systems and Operations

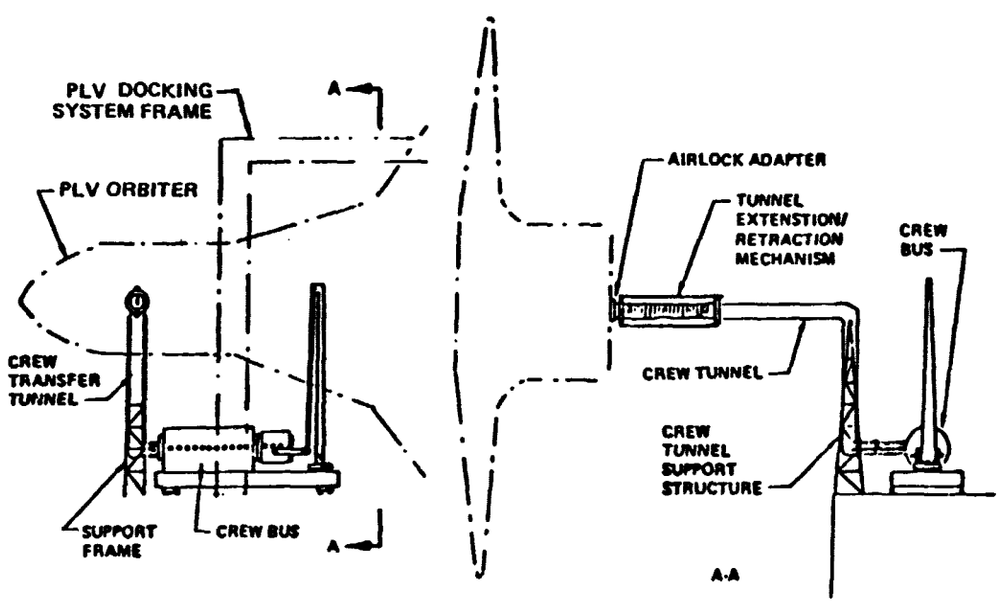

Figure 7-10. PLV Crew Transfer Tunnel System

The GEO Base crewmembers are delivered to a POTV at the OTV operations area. Figure 7-11 shows the POTV being loaded with supply modules and passengers. The supply modules were removed from HLLV cargo pallets and delivered to the POTV location. Two supply modules and 75 passengers are loaded onto each POTV.

Figure 7-12 illustrates how supply modules are delivered to the crew habitats. These modules are offloaded by hand. Empty supply modules are reloaded with compacted waste for return to Earth.

After the passengers and supply modules are loaded, the POTV is launched and flies to the GEO Base. This trip takes a few hours. There is an onboard flight crew that controls the flight.

When the POTV arrives at the GEO Base and has docked, the passengers are disembarked and the supply modules are offloaded as was described for the LEO Base. The POTV is refueled and supply modules (loaded with waste products) are attached. After a 1-day turnaround time, the down-trip passengers are boarded and the vehicle returns to the LEO Base.

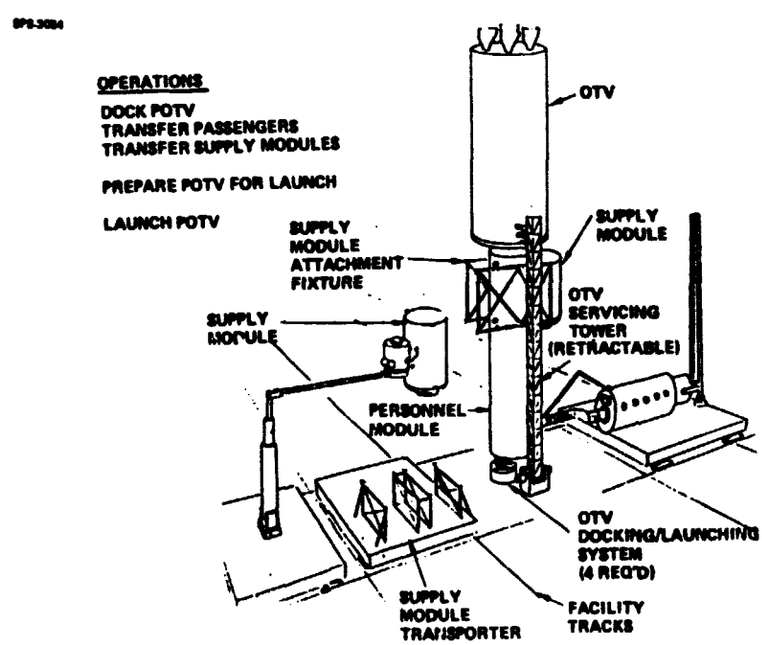

Figure 7-11. POTV Docking and Servicing Systems and Equipment

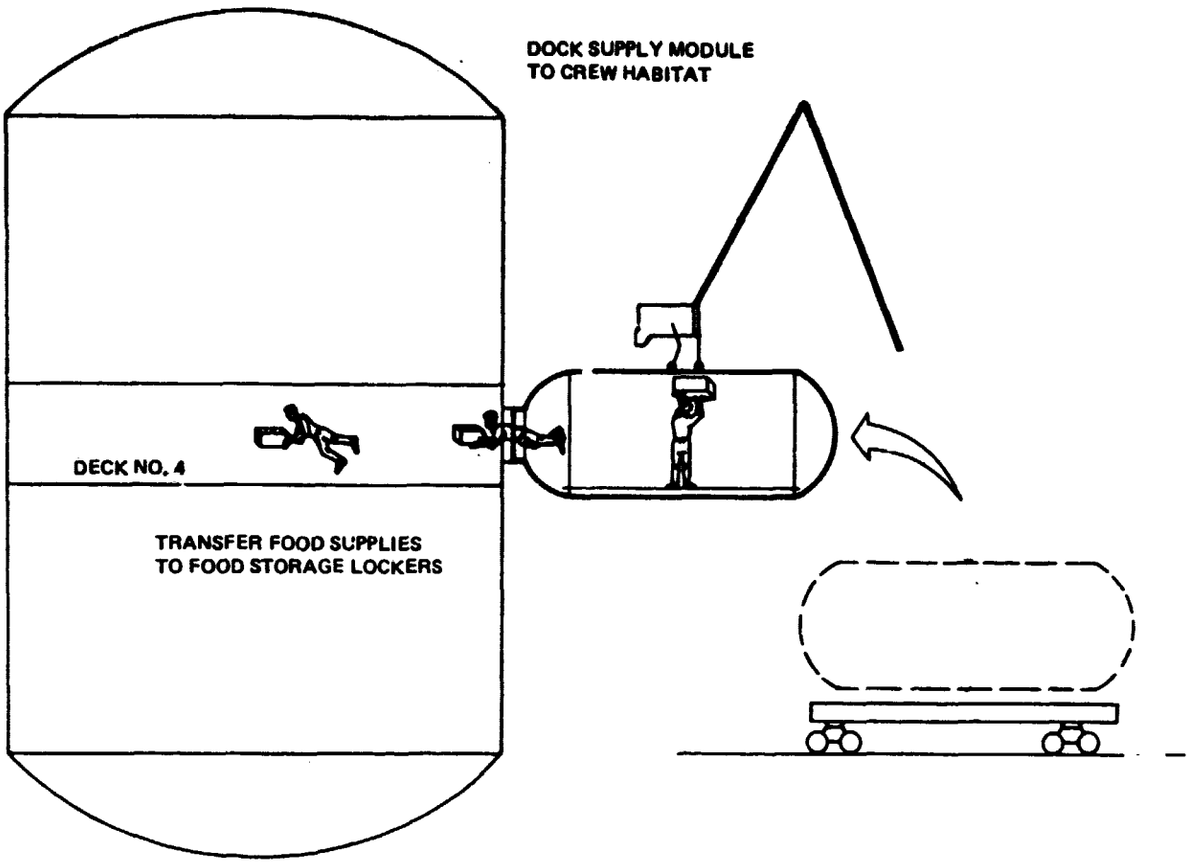

Figure 7-12. Supply Modules are Docked to Crew Habitats for Offloading of Contents

The maintenance sortie crew boards a mobile crew habitat. This habitat becomes their living quarters as well as transportation vehicle during their 90-day tour of 20 satellites. Supply modules are attached to the mobile habitat at the GEO Base prior to departure. At the satellites, the crewmen are transported about the base via crew busses.

4.3 COMMAND AND CONTROL SYSTEMS AND OPERATIONS

The command and control tasks required for the personnel transportation operations are identified in Table 7-1. The integrated command and control system elements used to support the personnel transportation operations are shown in Figure 7-13.

TABLE 7-1. COMMAND AND CONTROL TASKS

LOCATION/OPERATION: Personnel Transportation Operations

FUNCTION/TASKS	COMMAND & CONTROL TASKS	INTERFACE INTERNAL	INTERFACE EXTERNAL
o Ground-based Personnel Transportation C&C	o Receive SPS program constraints and master schedules		X
	o Create personnel transportation schedules	X	
	o Transmit personnel transportation schedules to PLV and POTV groups		X
	o Coordinate personnel transportation schedule with Space Traffic Control		X
	o Receive PLV status from Launch and Recovery Site and from LEO Base		X
	o Receive POTV status from LEO and GEO Bases		X
	o Coordinate PLV and POTV maintenance plans with vehicle maintenance groups		X
	o Coordinate crew suplies transportation requirements with PLV and HLLV groups		X
	o Plan personnel transportation vehicles and support systems requirements	X	
	o Receive orbital bases crew buses [illegible] transfer systems, and transient crew qua[illegible]		X
	o Coordinate POTV propellant deliv[illegible]ements		X
	o Provide PLV and POTV mid-course flight control		

TABLE 7-1. COMMAND AND CONTROL TASKS (Continued)

LOCATION/OPERATION: Personnel Transportation Operations

FUNCTION/TASKS	COMMAND & CONTROL TASKS	INTERFACE INTERNAL	INTERFACE EXTERNAL
o Launch and Recovery Site PLV Operations (See this section under the Launch and Recovery Site C&C Ops)			
o LEO Base Personnel Transportation Operations	o Receive personnel transportation schedule		X
	o Monitor/control PLV docking systems and personnel transfer systems o availability o maintenance o consummables o crew	X	
	o Monitor/control POTV docking/refueling and personnel transfer systems	X	
	o Coordinate PLV and POTV flight schedule with LEO Base Traffic Control	X	
	o Monitor crew buses status o availability o maintenance o consummables o crew	X	
	o Monitor transient crew quarters status o availabilty o occupancy o maintenance o consummables	X	

TABLE 7-1. COMMAND AND CONTROL TASKS (Continued)

LOCATION/OPERATION: Personnel Transportation Operations

FUNCTION/TASKS	COMMAND & CONTROL TASKS	INTERFACE INTERNAL	INTERFACE EXTERNAL
o LEO Base Personnel Transportation Operations (Continued)	o Transient status of PLV, POTV, docking systems crew buses transient crew quarters to Earth		X
	o Coordinate passenger list for each PLV		
o GEO Base Personnel Transportation Operations	o Receive personnel transportation schedule		X
	o Monitor/control POTV dicking systems and personnel transfer ssytems o availability o maintenance o consummables o crew	X	
	o Monitor/control mobile maintenance crew habitat docking systems and personnel transfer system o availability o maintenance o consummables o crew	X	
	o Coordinate POTV and Mobile Crew Habitat flight schedule with GEO Base Traffic Controller	X	
	o Maintain crew buses status o availability o maintenance o consummables o crew		

TABLE 7-1. COMMAND AND CONTROL TASKS (Continued)

LOCATION/OPERATION: Personnel Transportation Operations

FUNCTION/TASKS	COMMAND & CONTROL TASKS	INTERFACE INTERNAL	INTERFACE EXTERNAL
o GEO Base Personnel Transportation Operations	o Monitor transient crew quarters status o availability o maintenance o occupancy o consummabies	X	
	o Coordinate passenter list for each POTV	X	
	o Transmit status of POTV, Mobile Crew Habitat, transient crew quarters, docking system to Earth		X

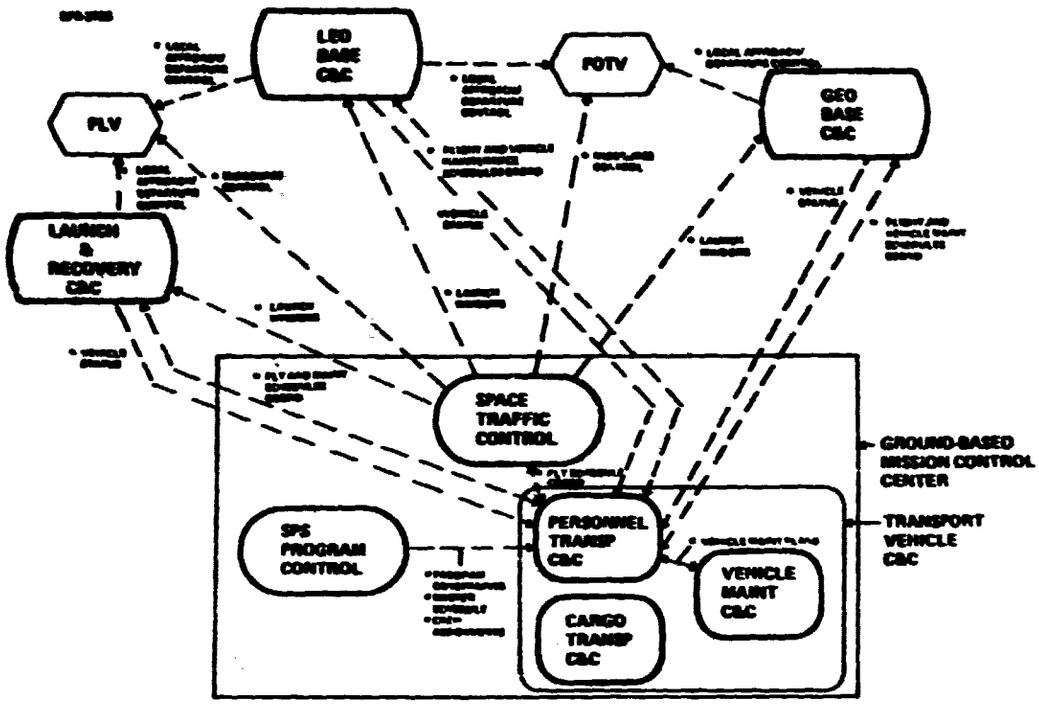

Figure 7-13. Personnel Transportation System Command and Control

The Personnel Transportation Command and Control group is a subfunctional group within the Transport Vehicle Command and Control Center. This group is responsible for integrating the crew transportation operations into the total program operations. This will involve keeping abreast of the personnel vehicles status, scheduling the vehicle flights and vehicle maintenance, coordinating launch window assignments with the Space Traffic Control C&C (the personnel flights have to be integrated with cargo vehicle flights, orbital base maneuvers, etc.) and so on.

The vehicle preparation, passenger operations, and vehicle approach/departure operations are managed by command and control elements located at the Launch/Recovery Site and at the orbital bases.

All of the personnel transportation vehicles have onboard flight crews. Preparation for launch will require a coordinated effort between the local transportation vehicle command and control center and the vehicle flight crew. After departure, the flight crew would perform a large share of the vehicle C&C.

SECTION 8

EARTH-TO-LEO CARGO TRANSPORTATION OPERATIONS

	Page
1.0 INTRODUCTION	8-1
2.0 EARTH-TO-LEO CARGO VEHICLE	8-1
3.0 EARTH-TO-LEO CARGO TRANSPORTATION SUPPORT SYSTEMS AND OPERATIONS	8-2
3.1 LEO Base Earth-to-LEO Cargo Transportation Support Systems and Operations	8-2
3.2 Earth-to-LEO Cargo Transportation Command and Control Operations	8-6

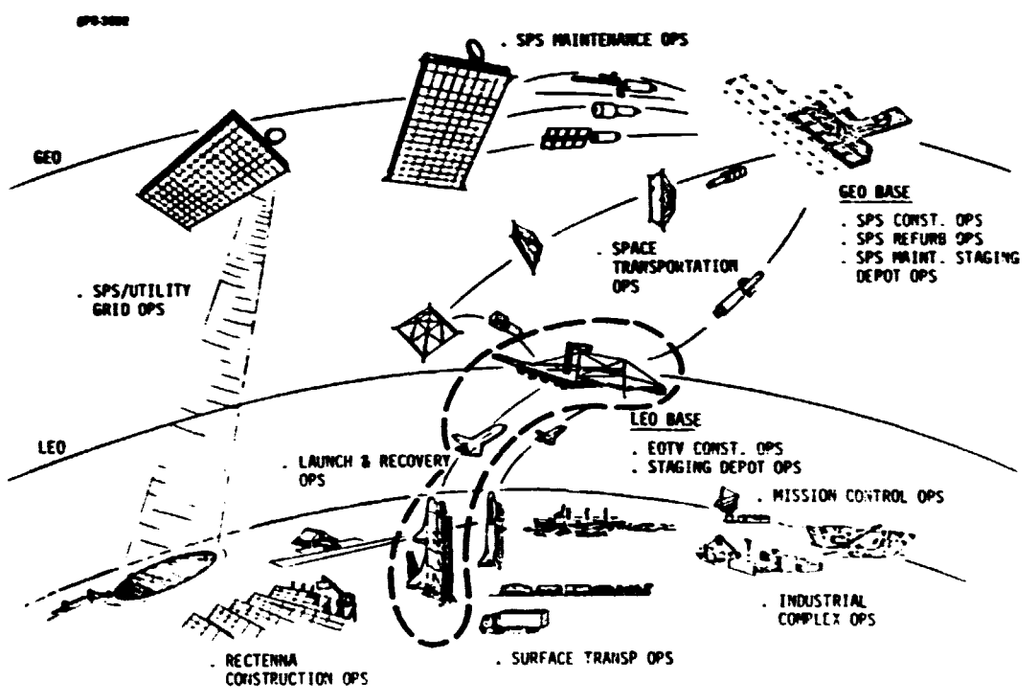

REPRODUCIBILITY OF THE ORIGINAL PAGE IS POOR

SECTION 8

EARTH-TO-LEO CARGO TRANSPORTATION OPERATIONS ANALYSIS

1.0 INTRODUCTION

This report describes the LEO Base systems and operations that are required to interface with the Earth-to-LEO cargo transportation system (the heavy lift launch vehicle, HLLV). The Launch and Recovery Site interface with the HLLV's is described in Section 6.0.

2.0 EARTH-TO-LEO CARGO VEHICLE

The reference SPS cargo vehicle is the two-stage, fully reusable heavy lift launch vehicle (HLLV) shown in Figure 8-1. Refer to WBS 1.3.1 for a detailed description of the HLLV. The net delivered payload is 424,000 kg. A return payload of 15% (63,500 kg) of the delivered payload was assumed.

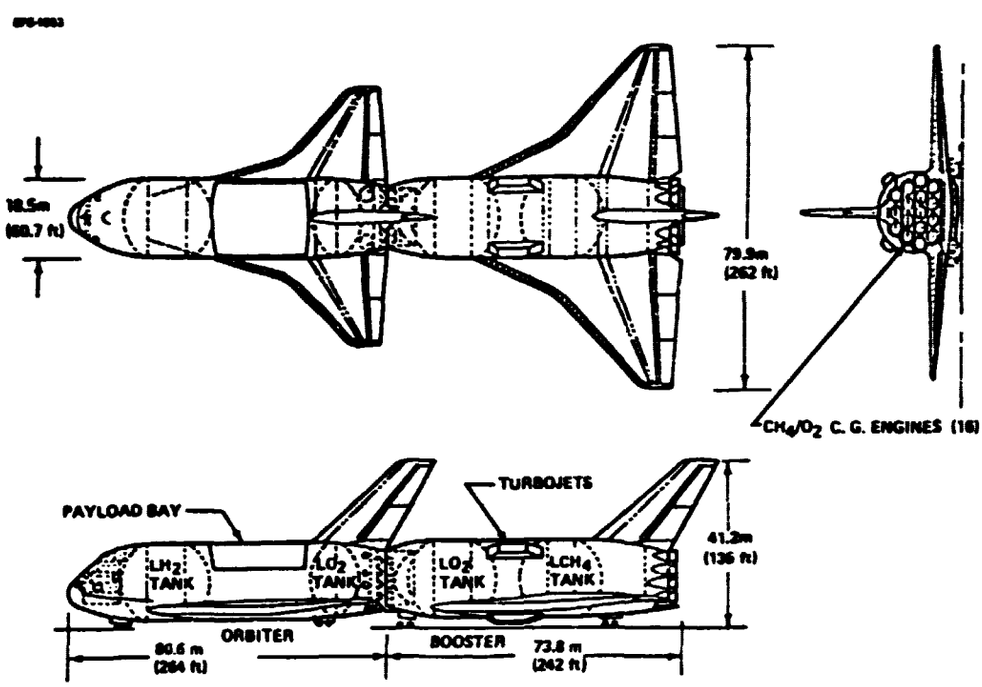

Figure 8-1. Two-Stage Winged SPS Launch Vehicle (Fully Reusable Cargo Carrier)

3.0 EARTH-TO-LEO CARGO TRANSPORTATION SUPPORT SYSTEMS AND OPERATIONS

3.1 LEO BASE EARTH-TO-LEO CARGO TRANSPORTATION SUPPORT SYSTEM AND OPERATIONS

There are two HLLV support systems at the LEO Base: 1) A set of HLLV Docking Systems, and 2) Cargo Pallet Handling Machines.

3.1.1 HLLV Docking System (WBS 1.2.2.1.6.1)

The cargo packaging analysis (Section 5) defined the requirement for an average of 8 HLLV flights per week. The Launch and Recovery Site operations analysis shows a launch schedule of 2/1/2/1/2 HLLV launches per day each week. It is, therefore, necessary to provide docking facilities for 2 HLLV's at the LEO Base at one time. An additional docking facility is required as a spare bringing the total to 3 HLLV docking facilities.

Figure 8-2 illustrates the HLLV Docking Facility concept. This facility is composed of a "window frame" structure on which is attached a primary docking boom and 2 secondary docking booms. Figure 8-3 illustrates how these docking booms are employed to attach to the HLLV orbiter and to pull the vehicle into a docked position. These docking booms are operated from a control cab located at the lower center of each of the docking facilities.

It will be assumed that it will take 1 hour to perform the HLLV docking operations depicted in Figure 8-3.

3.1.2 Cargo Pallet Handling Machine (WBS 1.2.2.1.3.1)

A cargo pallet handling machine, such as shown in Figure 8-4, will be located at each of the 2 HLLV docking facilities. This machine reaches into the HLLV cargo bay and extracts the cargo pallet. Figure 8-5 shows a cargo pallet being removed from the HLLV. The machine backs up, a cargo transporter is driven into a loading position, and the machine lowers the pallet onto the transporter. The transporter is driven to a cargo handling and storage area where the cargo will be processed. The processing of the cargo will be detailed in Sections 9 and 10.

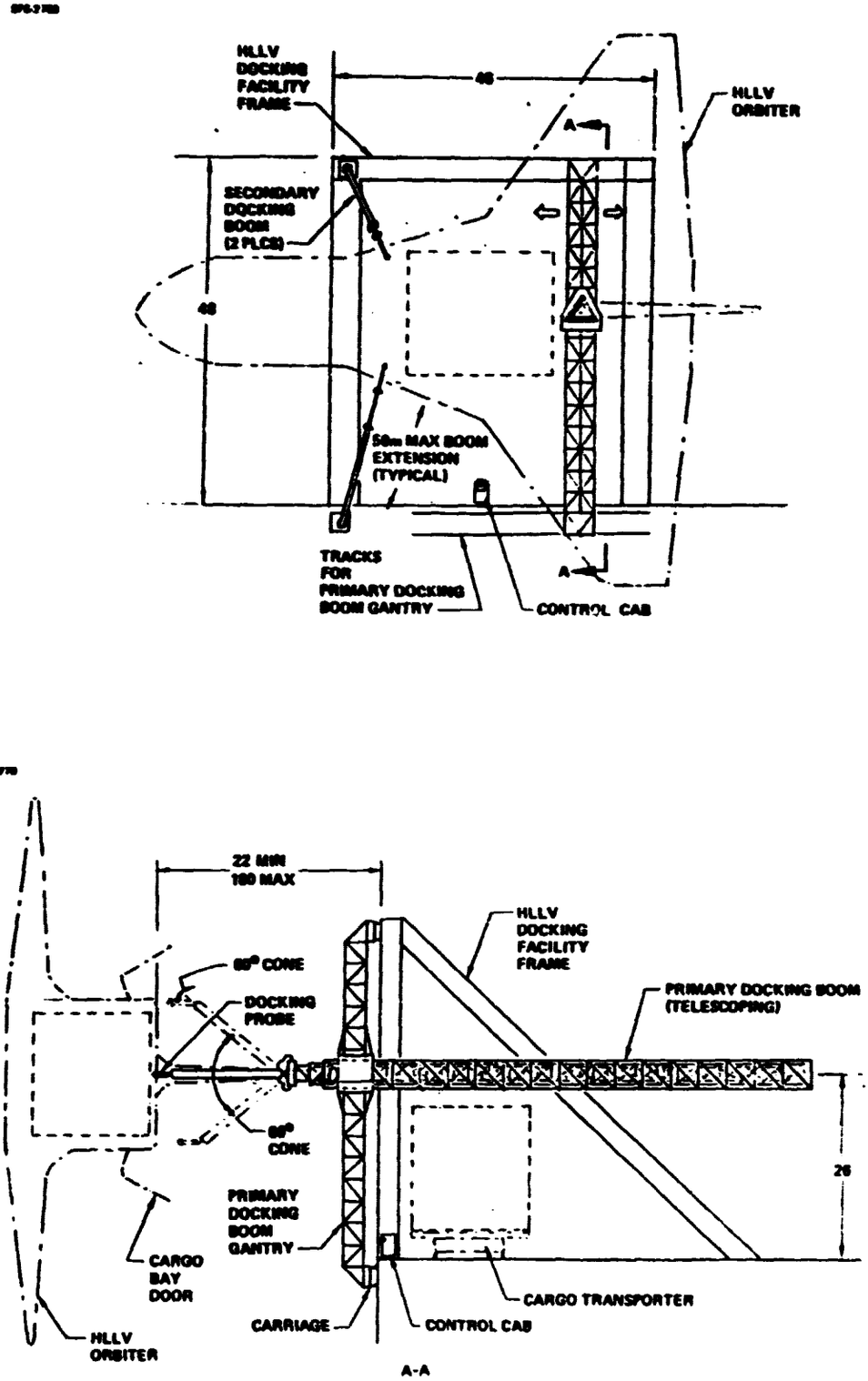

Figure 8-2. HLLV Docking Facility (WBS 1.2.2.1.6.1)

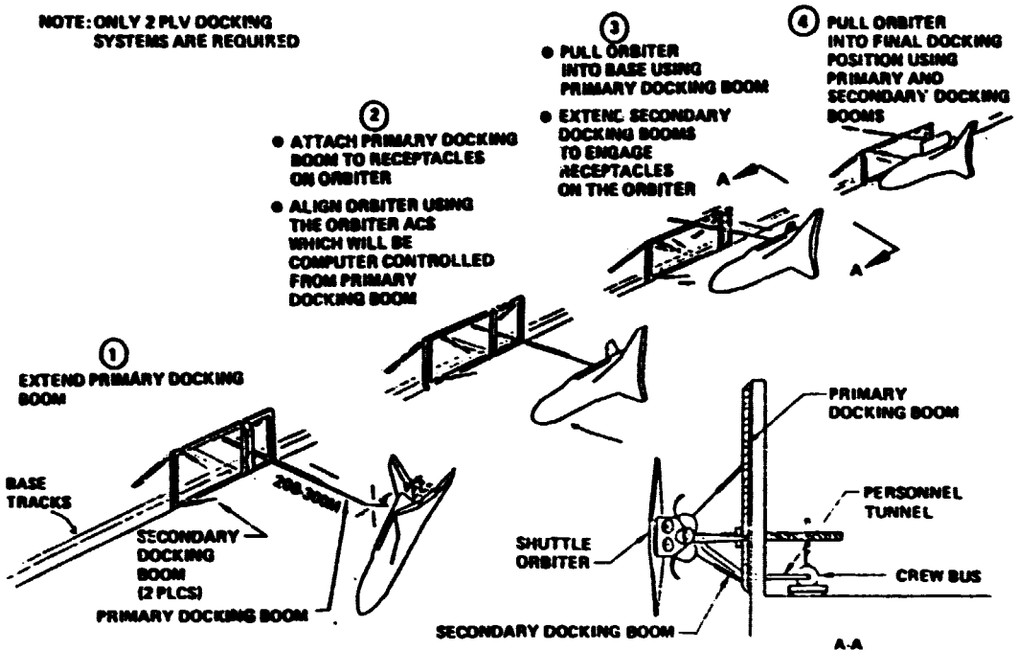

Figure 8-3. HLLV Docking Systems on the LEO Base

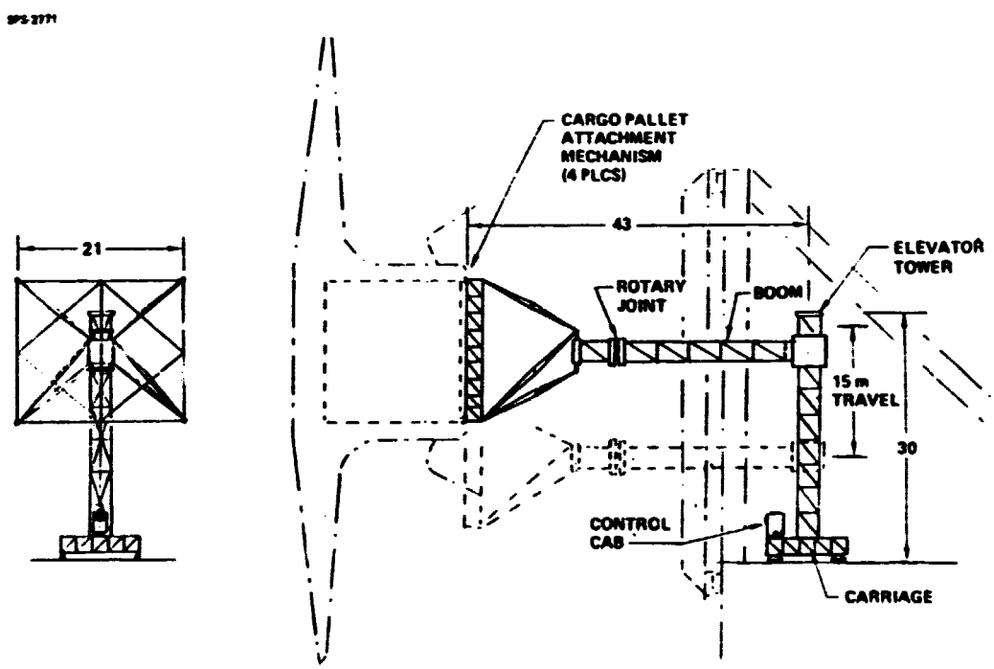

Figure 8-4. Cargo Pallet Handling Machine (WBS 1.2.2.1.3.1)

REPRODUCIBILITY OF THE ORIGINAL PAGE IS POOR

REPRODUCIBILITY OF THE
ORIGINAL PAGE IS POOR

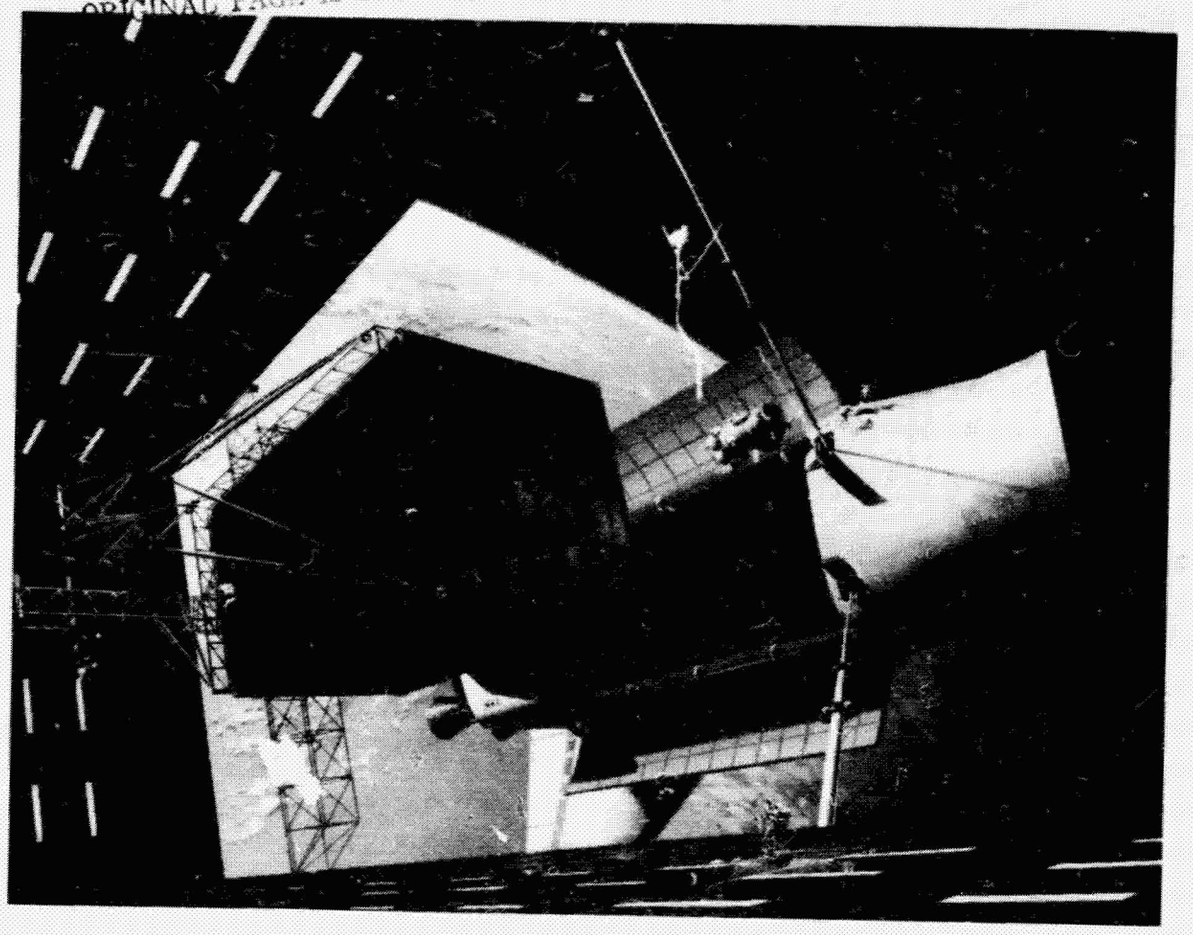

Figure 8-5. Cargo Pallet Being Offloaded from a HLLV at the LEO Base

3.1.3 HLLV Crew Transfer Tunnel System

It is necessary to provide a means for transferring the HLLV flight crew out of the HLLV flight deck and into a crew bus at the LEO Base. Figure 8-6 illustrates a dedicated HLLV crew transfer tunnel system that would be located adjacent to each of the HLLV docking facilities.

3.1.4 LEO Base LEO-to-GEO Cargo Transportation Support Systems and Crew Size Summary

The systems and crew associated with the HLLV operations at the LEO Base are summarized in Table 8-1.

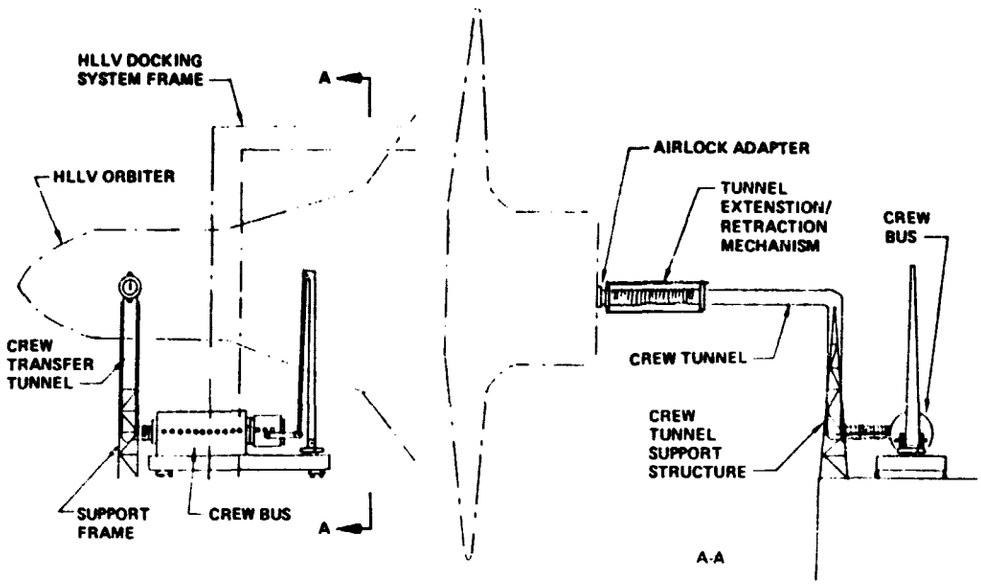

Figure 8-6. HLLV Crew Transfer Tunnel System

3.2 EARTH-TO-LEO CARGO TRANSPORTATION COMMAND AND CONTROL OPERATIONS

The command and control tasks associated with the Earth-to-LEO cargo transportation system are listed in Table 8-2.

TABLE 8-1 LEO BASE HLLV SUPPORT SYSTEMS AND CREW SIZE SUMMARY

HLLV Support Systems	
o HLLV Docking Facilities (WBS 1.2.2.1.6.1	3 Req'd [2]
o Frame	
o Primary Docking Boom	
o Secondary Docking Booms (2 req'd)	
o Control Cab (1 man)	
o Cargo Pallet Handling Machine (WBS 1.2.2.1.3.1)	3 Req'd [2]
o Cargo Transporters (WBS 1.2.2.1.3.2)	3 Req'd [2]
o Crew Transfer Tunnel System	3 Req'd [2]
Crew Size [1]	
o HLLV Docking Facility Operator	
(2 facilities) X (1 per shift) X (2 shifts) =	4 operators
o Cargo Pallet Machine Operator	
(2 machines) X (1 per shift) X (2 shifts) =	4 operators
o HLLV Facility Supervisor	
(1 per shift) X (2 shifts) =	2 supervisors
TOTAL	10 People

[1] Does not include command and control personnel

[2] Includes 1 spare

TABLE 8-2

COMMAND AND CONTROL TASKS

LOCATION/OPERATION: EARTH-TO-LEO CARGO TRANSPORTATION

Function/Tasks	Command and Control Tasks	Interface Internal	Interface External
o Launch Site Cargo Transp. Ops (Refer to Launch and Recovery Site C&C Ops - Task 4.3)			
o LEO Base HLLV Operators	o Coordinate HLLV approach and departure schedule with Base Traffic Control	*	
	o Monitor HLLV status while at LEO Base	*	
	o Transmit HLLV status to Earth		*
	o Coordinate unscheduled HLLV maintenance plans		*
	o Receive launch window assignments		*
	o Monitor HLLV docking and cargo handling and cargo handling systems and equipment status o availability o maintenance o crew o consummables	*	
	o Monitor/control HLLV docking system operations	*	

TABLE 8-2 (cont.)

COMMAND AND CONTROL TASKS

LOCATION/OPERATION: EARTH-TO-LEO CARGO TRANSPORTATION

Function/Tasks	Command and Control Tasks	Interface Internal	Interface External
	o Monitor/control HLLV cargo loading/ offloading operations	*	
	o Coordinate intra-base transportation requirements	*	
	o Conduct HLLV crew ops o assignments o schedules o training o crew rotation	*	
	o Monitor HLLV flight crew o transportation o schedules o temporary housing	*	

SECTION 9

LEO BASE OPERATIONS

			Page
1.0	Integrated LEO Base Operations Description		9-1
2.0	EOTV Construction Operations		9-3
	2.1	Construction Approach	9-3
	2.2	Block 1.1 - Assemble Bay No. 1 (Typical of all bays)	9-8
		Block 1.1.1 - Fabricate and Assemble Structure	9-10
		Equipment Utilization	9-10
		Block 1.1.2 - Deploy Solar Array	9-15
		Block 1.1.3 - Install Power Distribution System	9-15
		Block 1.1.4 - Install Attitude Control System	9-15
		Block 1.1.5 - Install Other Subsystems	9-19
		Block 1.1.6 - Assemble and Install Annealing Machine	9-19
	2.3	Block 1.5 - Assemble Cargo Platform	9-20
3.0	Logistics Operations		9-21
	3.1	Space Vehicle Support Operations	9-21
		3.1.1 Vehicle Docking Operations	9-21
		3.1.2 Space Vehicle In-Space Maintenance	9-23
		3.1.3 Vehicle Refueling Operations	9-26
		3.1.4 Vehicle Launching Operations	9-29
	3.2	Cargo Handling/Distribution Operations	9-29
	3.3	Crew/Crew Supplies Intra-base Transportation Operations	9-33
		3.3.1 Intra-base Crew Transportation	9-33
		3.3.2 PLV Crew Transfer Operations	9-33
		3.3.3 POTV Crew Transfer Operations	9-34
		3.3.4 Crew Supply Module Transfer Operations	9-34
	3.4	Crew Requirements	9-34

SECTION 9

LEO BASE OPERATIONS (continued)

			Page
4.0	Base Operations		9-35
	4.1	Habitation Operations	9-35
	4.2	Electrical Power Supply System Operations	9-35
	4.3	Base Attitude Control/Stationkeeping System Operations	9-35
	4.4	Base Maintenance Operations	9-35
	4.5	Crew Training Operations	9-35
	4.6	Crew Health and Safety Operations	9-36
	4.7	Communication Systems Operations	9-36
	4.8	Data Management System Operations	9-36
	4.9	Crew Requirements	9-36
	4.10	Command and Control Tasks	9-36

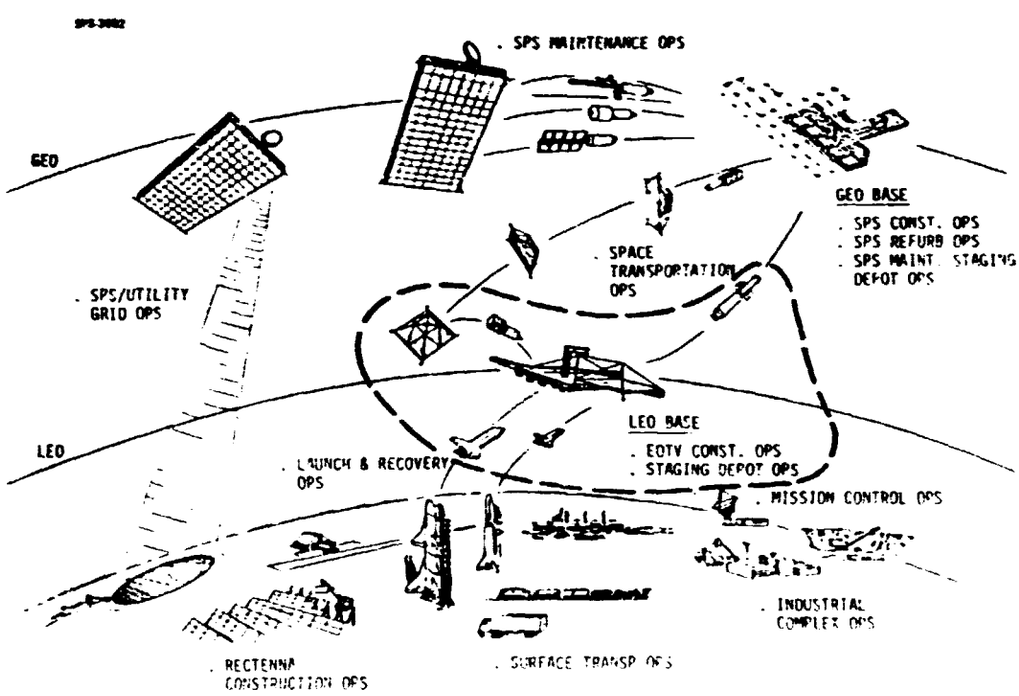

SECTION 9
LEO BASE OPERATIONS

1.0 INTEGRATED LEO BASE OPERATIONS

The LEO Base, shown in Figure 9-1, has two major operational functions: 1) It is used to construct the electric orbital transfer vehicles (EOTV's), and 2) it is used as a staging base for cargo and personnel going between the Earth and the GEO Base. In order to implement these two operational functions, it is necessary to conduct what will be called "Base Operations." These are the operations associated with the base attitude control, power supply system control, crew habitat, housekeeping, etc.

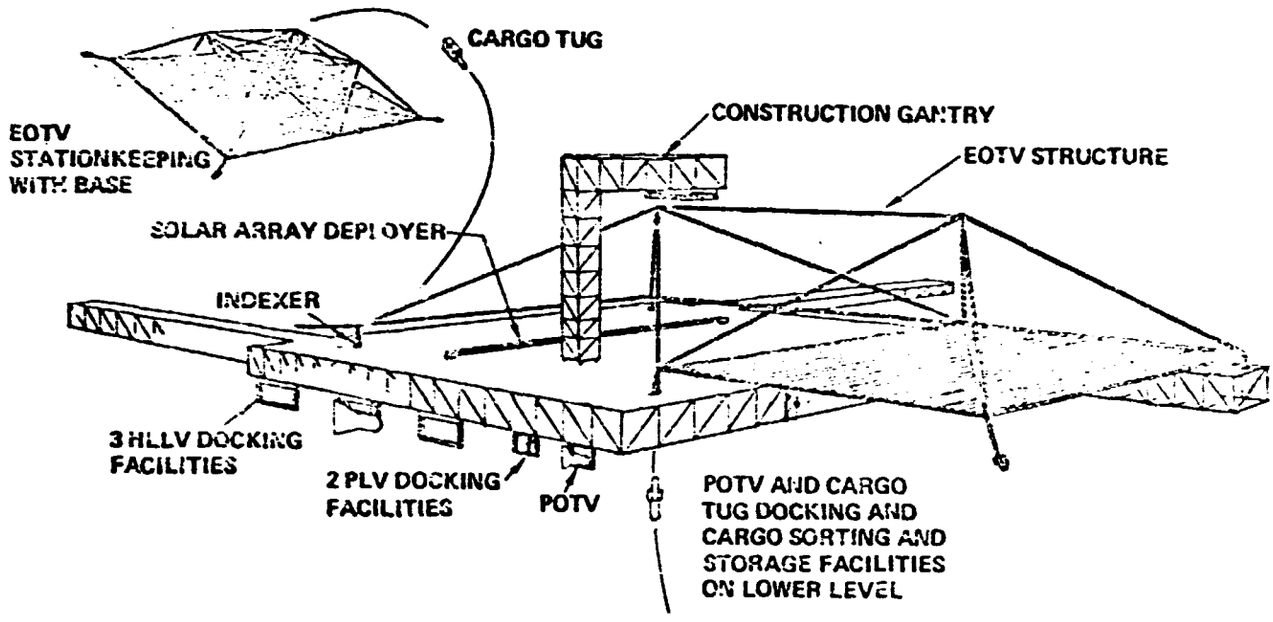

Figure 9-1. LEO Base

The EOTV construction operations are conducted intermittently during the SPS construction program. Figure 9-2 shows how an initial fleet of 23 EOTV's is constructed during years 1 through 4. The EOTV construction operations are then terminated until year 10 when a replacement EOTV fleet will be constructed at the rate of 8 units per year. A construction crew of 35 people is required.

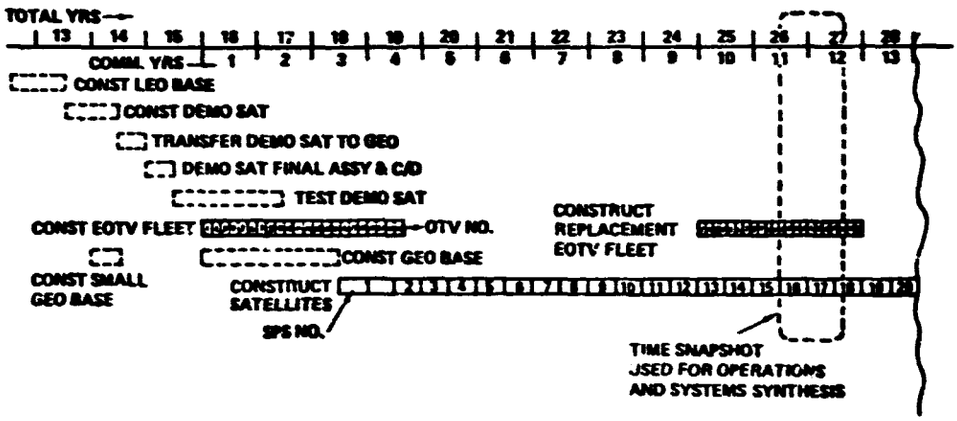

Figure 9-2. SPS Demonstration and Commercialization Schedule

The staging depot operations are conducted continuously throughout the life of the SPS program. Both SPS construction and maintenance crews and materials are transhipped through the LEO Base. The SPS construction cargo that is delivered to LEO by the heavy life launch vehicles (HLLV's) is transferred to the EOTV's which stationkeep with the LEO Base during the transfer operations. Cargo tugs are used to move the cargo pallets. The GEO Base crews arrive at the LEO Base on the personnel launch vehicles (PLV's) and are moved by crew busses to transient crew quarters. When their personnel orbital transfer vehicle (POTV) is ready, the crews are taken to the POTV's passenger module. Crew supplies modules are attached to the POTV. Empty cargo pallets and crews returning from GEO are also transhipped through the LEO Base. A crew of 84 people is required for these logistics operations.

The so-called "base operations" include habitation operations (housekeeping, food service, etc.), base subsystem operations (electrical power, flight control, computers, etc.), base maintenance operations, crew training operations, and health/safety operations. Most of these require 24-hour-per-day, 7-day-per-week operations. A crew of 102 people is required for these functions.

Figure 9-3 shows the top-level crew organization for the total LEO Base crew size of 230 people.

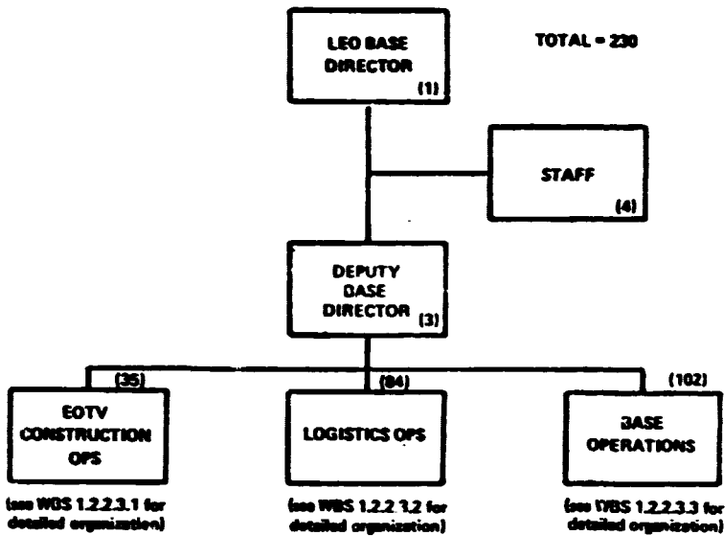

Figure 9-3. LEO Base

2.0 EOTV CONSTRUCTION OPERATIONS

2.1 Construction Approach

The EOTV construction system is designed to construct EOTV's at the rate of 1 EOTV every 45 days (8 EOTV's per year). Figure 9-4 shows the construction functional flow. Figure 9-5 illustrates the construction sequence. Figure 9-6 shows the corresponding timeline.

The EOTV's are constructed on a bay-by-bay build-up basis wherein each of the 4 EOTV bays are assembled in 10 days each. Figure 9-7 shows the functional flow chart and Figure 9-8 shows the timeline for the assembly operatons.

While the solar array and structure are being assembled, the cargo platform is assembled on the construction gantry. Figure 9-9 shows the functional flow diagram. The cargo platform is installed after Bay 3 is completed.

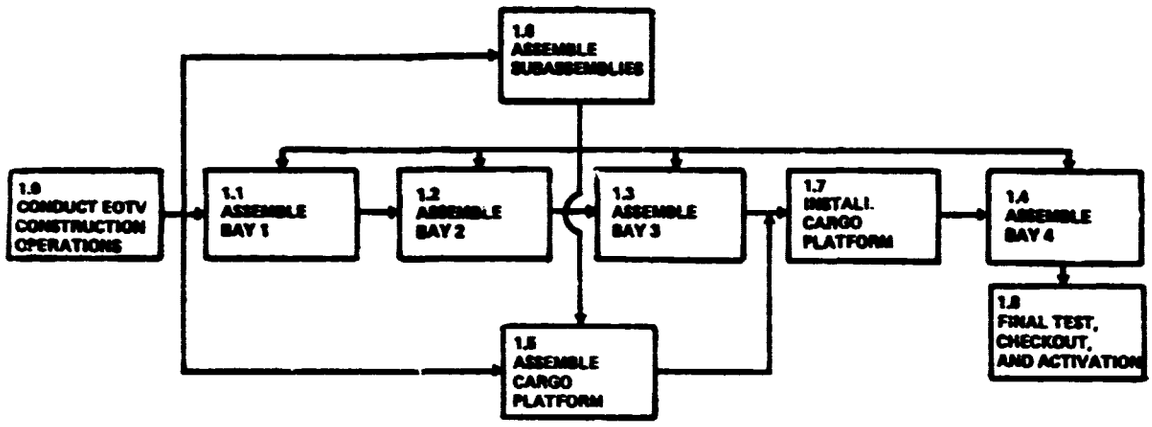

Figure 9-4. EOTV Construction Operations

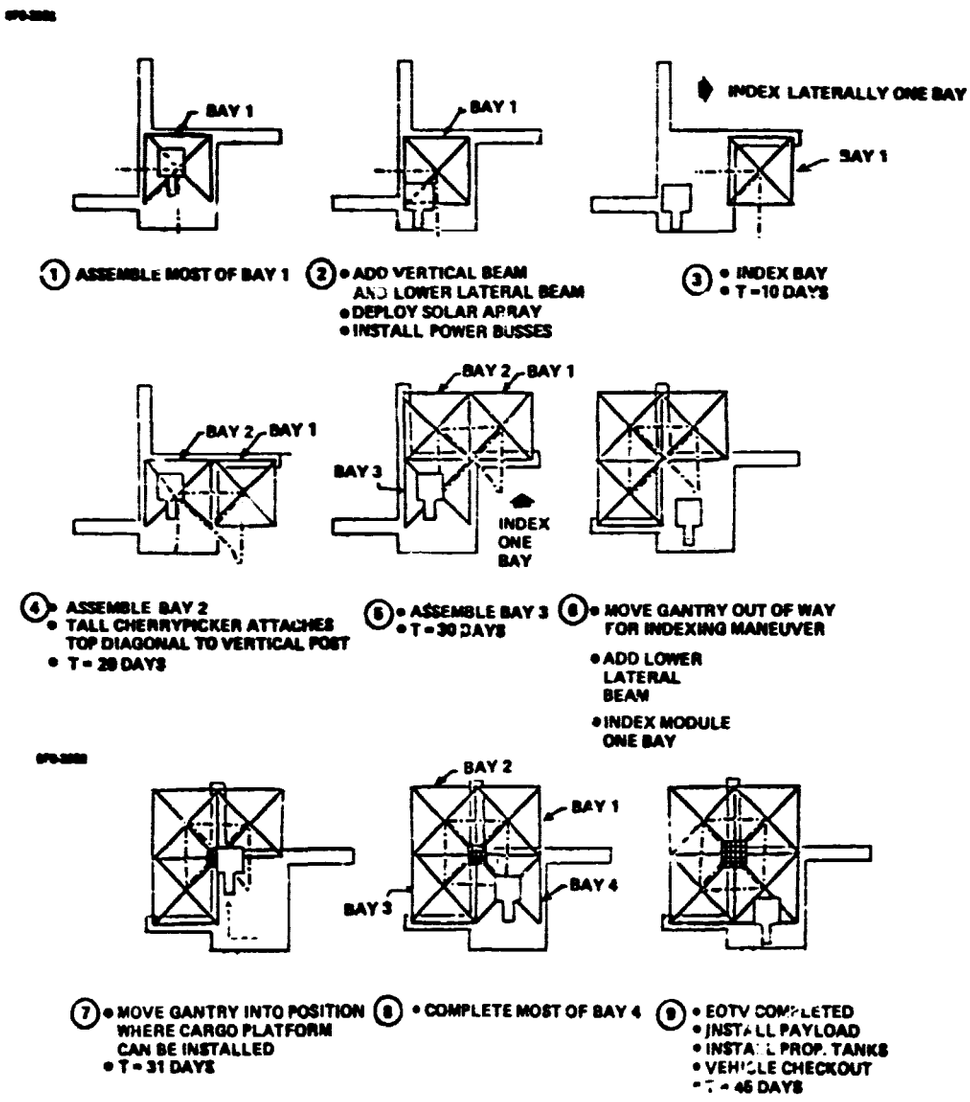

Figure 9-5. EOTV Construction Sequence

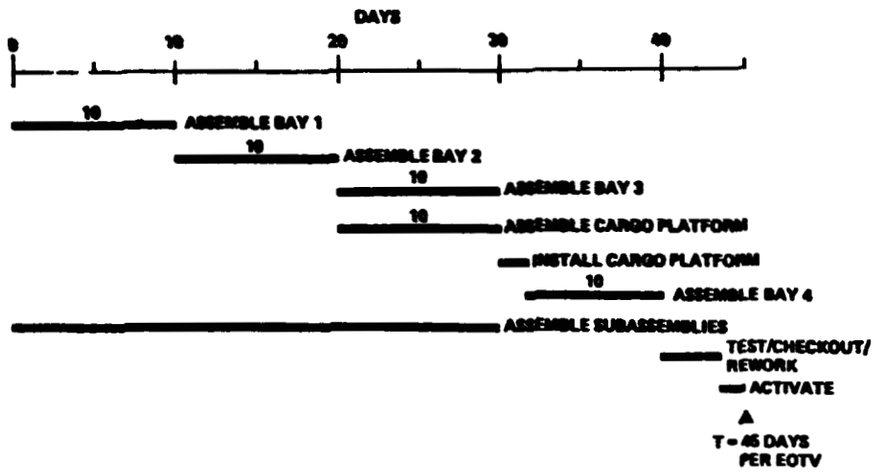

Figure 9-6. EOTV Construction Timeline

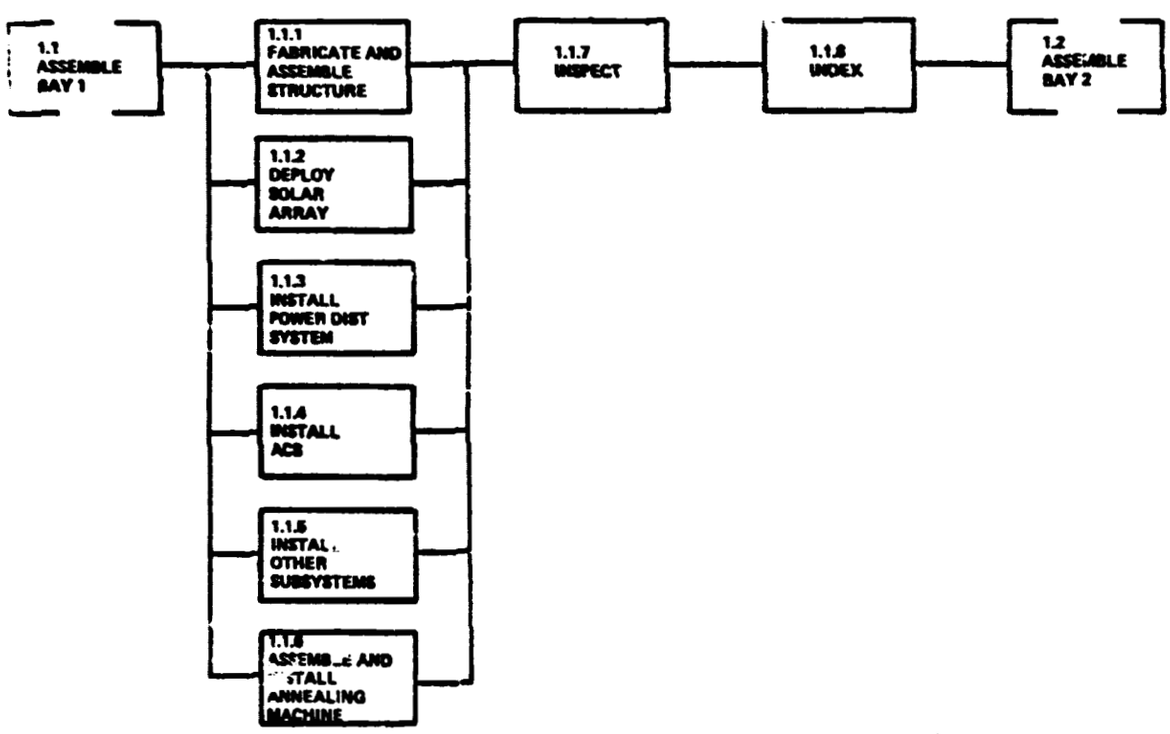

Figure 9-7. Functional Flow Diagram for Construction of Each EOTV Bay

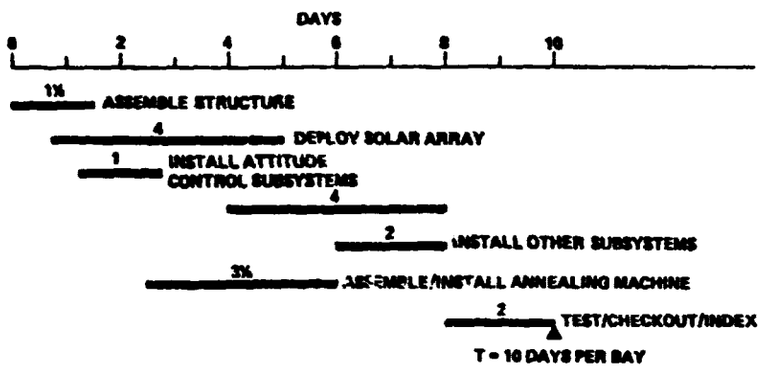

Figure 9-8. Typical Construction Timeline for Each EOTV Bay

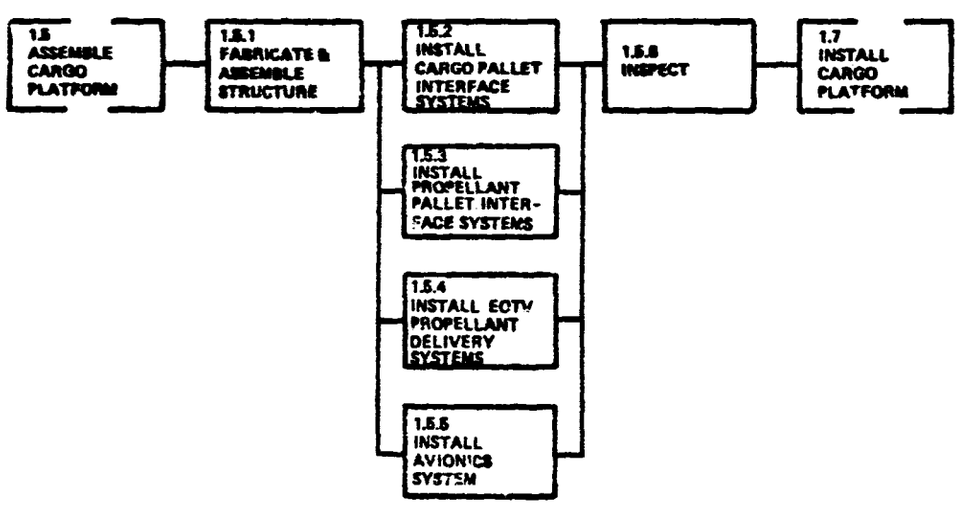

Figure 9-9. Cargo Platform Assembly Operations

The subassembly operations proceed in parallel with the assembly of Bays 1, 2, and 3. (WBS 1.2.2.1.4 describes the subassemblies). Figure 9-10 shows the subassembly operations functional flow.

Figure 9-11 shows the final test/checkout/activation functional flow chart.

The EOTV construction crew size and organization are shown in Figure 9-12.

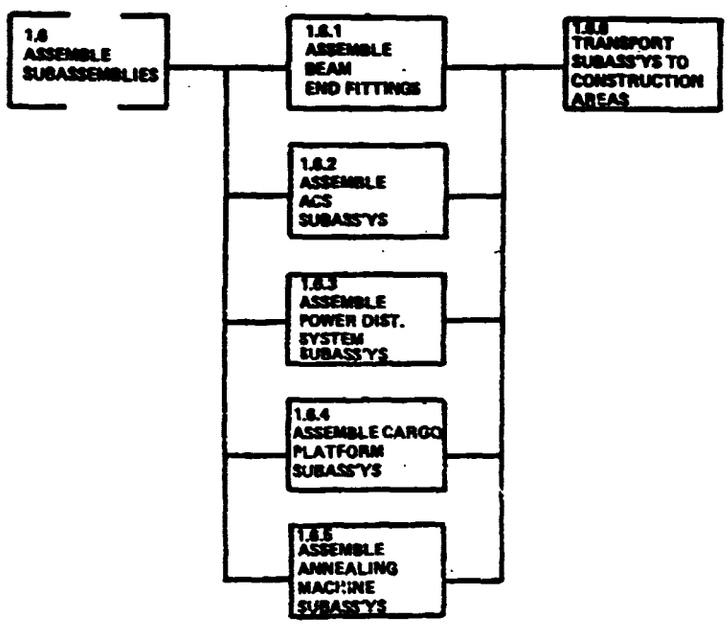

Figure 9-10. Subassembly Factory Operations

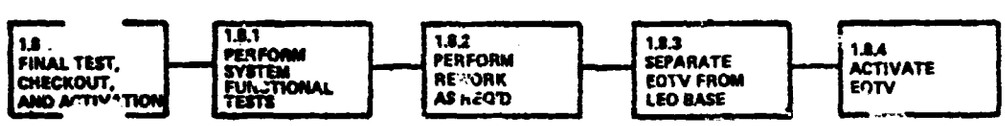

Figure 9-11. Final Test, Checkout and Activation Operations

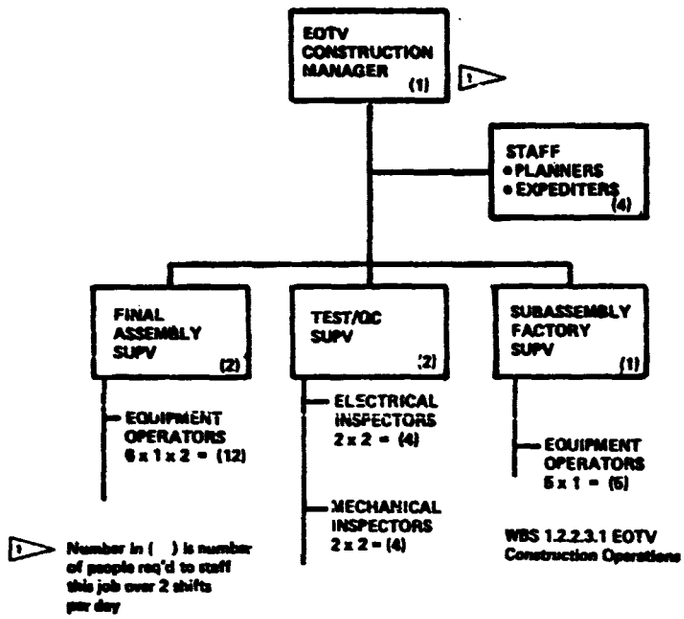

Figure 9-12. EOTV Construction Crew

2.2 Block 1.1 Assemble Bay No. 1 (typical of all bays)

The EOTV has 4 power collection bays. Figure 9-13 shows the configuration of Bay No. 1, which is typical of the other 3 bays except where noted.

The assembly of each of these bays is accomplished in 10 days as was shown in the timeline in Figure 9-8. (The timelines for assembling Bays 2, 3, and 4 are assumed to be essentially the same even though they have fewer beams to fabricate and install. As the non-structural assembly operations dominate the 5 day timeline, it was deemed reasonable to ignore the slight differences due to the varying numbers of beams to be fabricated.) The assembly operational sequence is shown in Figure 9-7. The assembly operations will require the collection of construction equipment shown in Figure 9-14.

Some, but not all, of the construction operations shown in Figure 9-8 will be detailed in the following subsections.

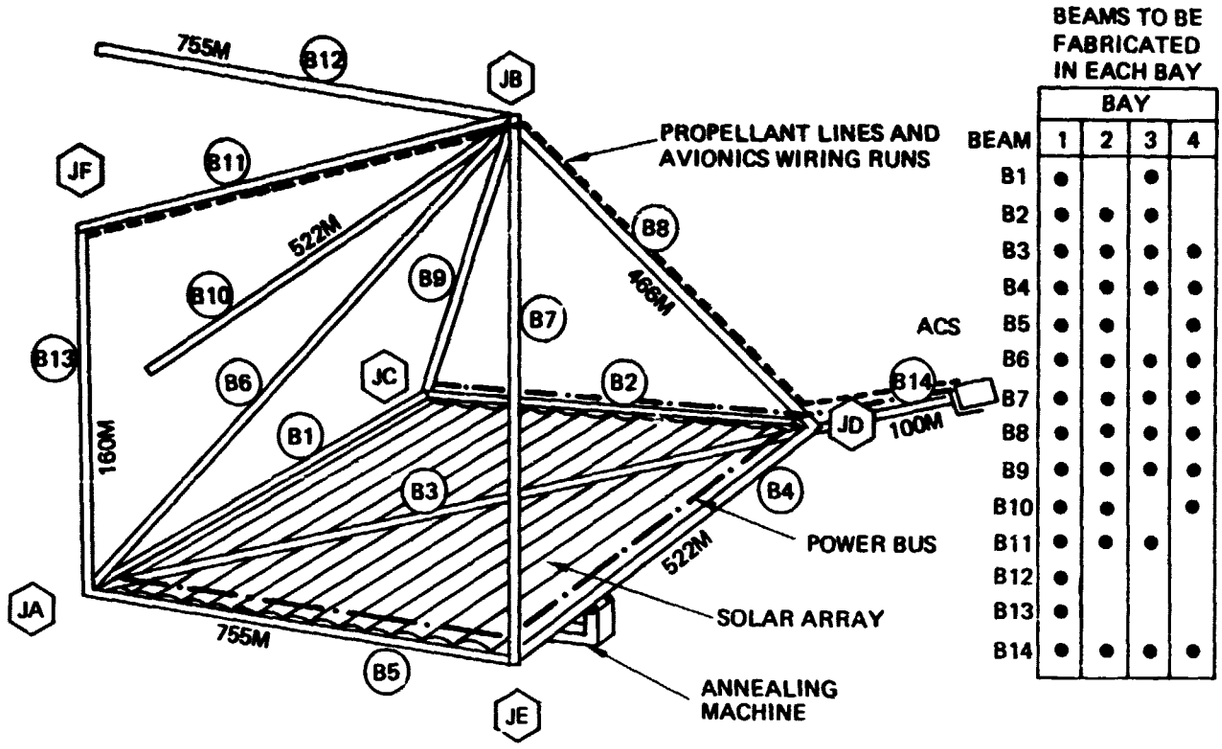

Figure 9-13. Bay No. 1 Configuration

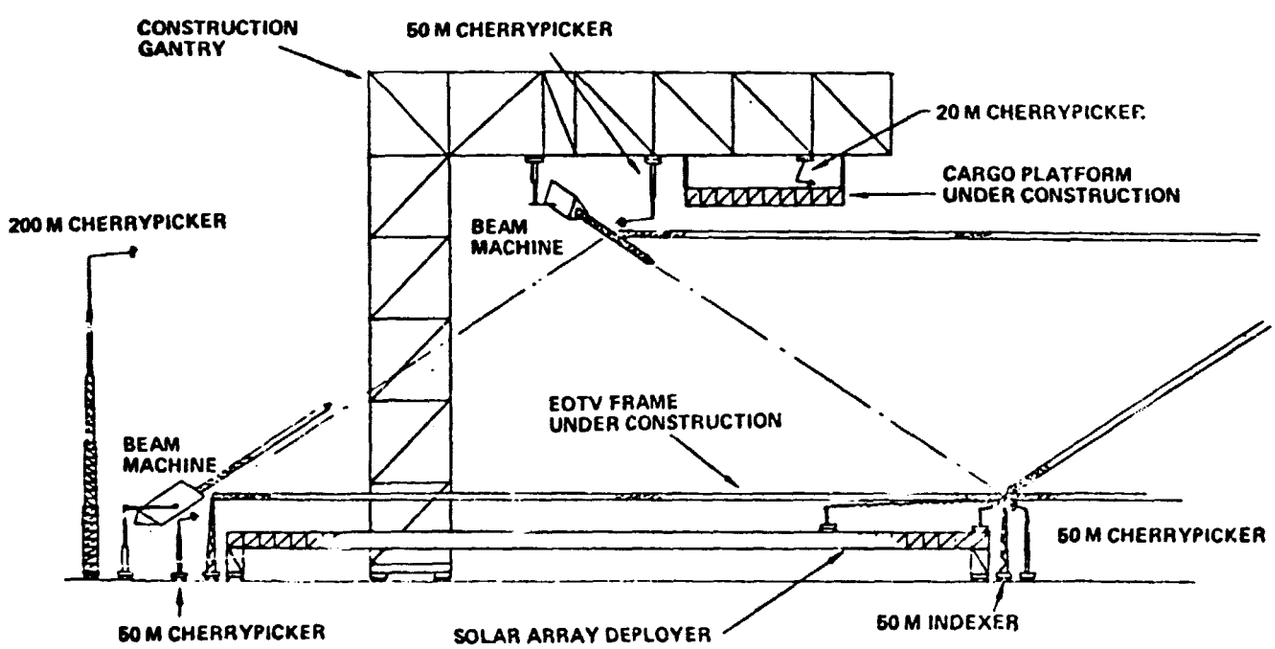

Figure 9-14. EOTV Construction Equipment

Block 1.1.1 Fabricate and Assemble Structure

The functional flow sequence for the structural assembly operation is shown in Figure 9-15. This operation requires 2 beam machines (WBS 1.2.2.1.8.1) (BM1 operates from the main deck and BM2 operates from the construction gantry) and 4 of the 50m cherrypickers (WBS 1.2.2.1.2.2) (CP1 and CP2 operate from the main deck and CP3 and CP4 operate from the construction gantry).

Equipment Utilization

The timeline shown in Figure 9-16 shows the equipment duty cycles for the structural assembly equipment. This timeline points out several important factors:

1. Beam Machine No. 1 - This beam machine is the pacing equipment item. It will be necessary to have a spare beam machine standing by to take over if BM1 has a failure.

2. Beam Machine No. 2 - This beam machine will be finished about 2/3 of the way through day 1. The crew can then be liberated to work elsewhere.

3. Cherrypickers - Due to the very low duty time on the structural assembly operations, it will be feasible to send these cherrypickers to other locations to participate in other construction tasks, e.g., subassembly, annealing machine assembly, etc.

4. Start-up of Other Construction Operations - In the assumptions on machine and operator productivity, a 75% efficiency factor was allocated. Applying this factor to the time prior to construction gantry indexing (16.48 hours) results in a "ready-to-index-time" of 21.9 hours. It could be reasonably assumed that the structural assembly second shift could work overtime in order to have the structure completed to the point where the construction gantry could be indexed between shifts. Therefore, the other construction operations (solar array deployment, bus installation, etc.) could begin at the start of first shift on day 2. The remainder of structure fabrication and assembly would be completed during first shift on day 2.

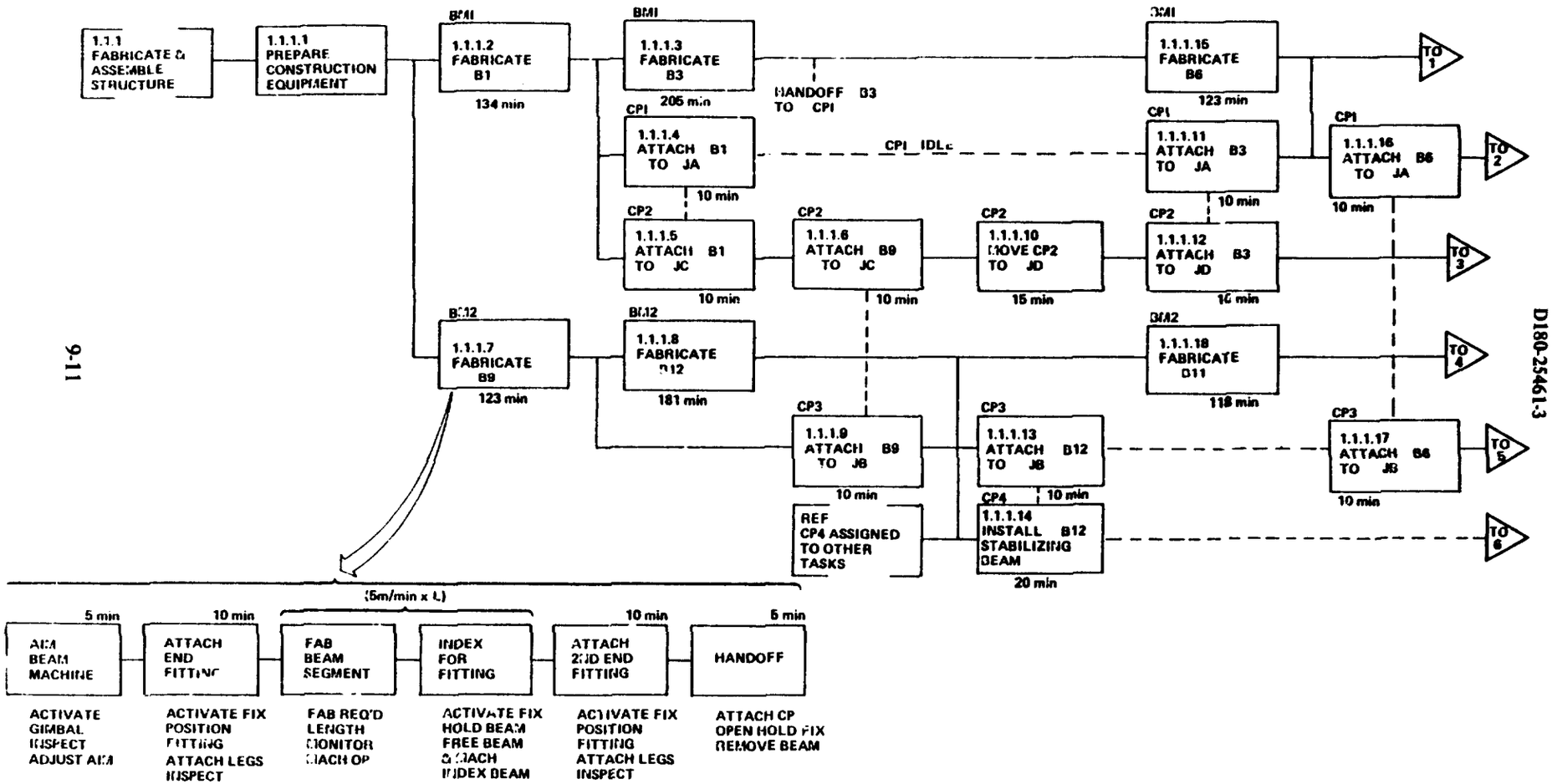

Figure 9-15. Block 1.1.1—Fabricate and Assemble Structure—4th Level Functional Flow

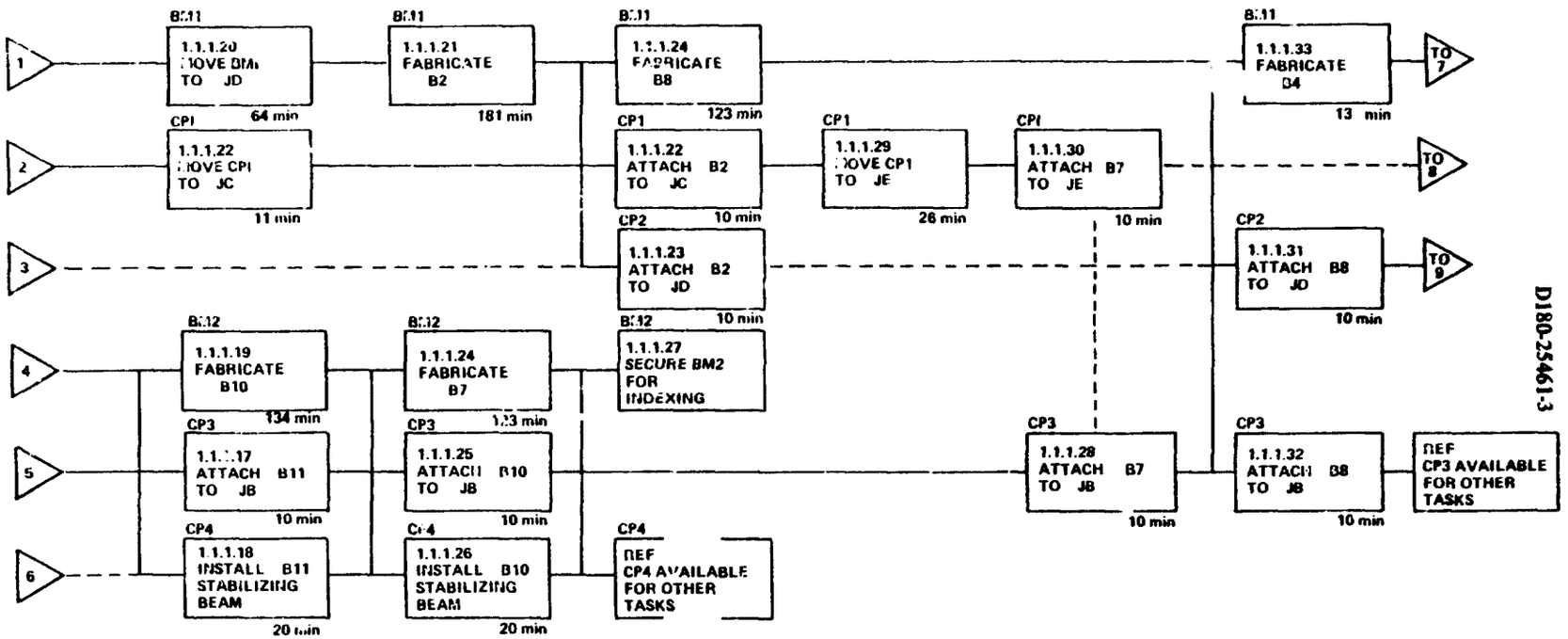

Figure 9-15. Bl... 1.1.1—Fabricate and Assemble Structure—4th Level Functional Flow

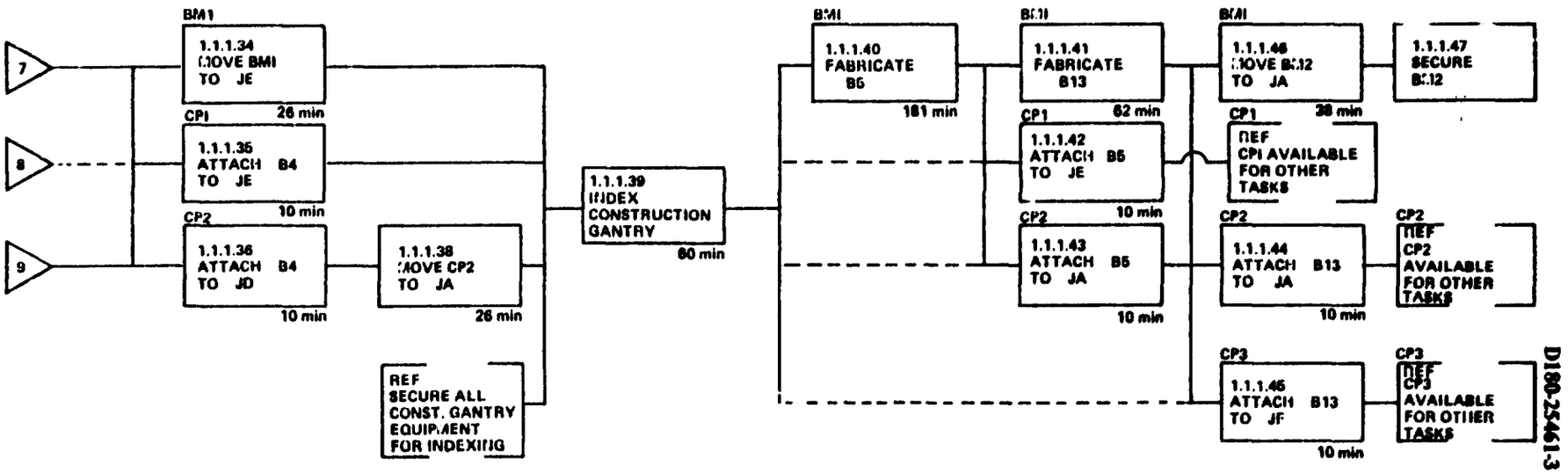

Figure 9-15. Block 1.1.1—Fabricate and Assemble Structure—4th Level Functional Flow

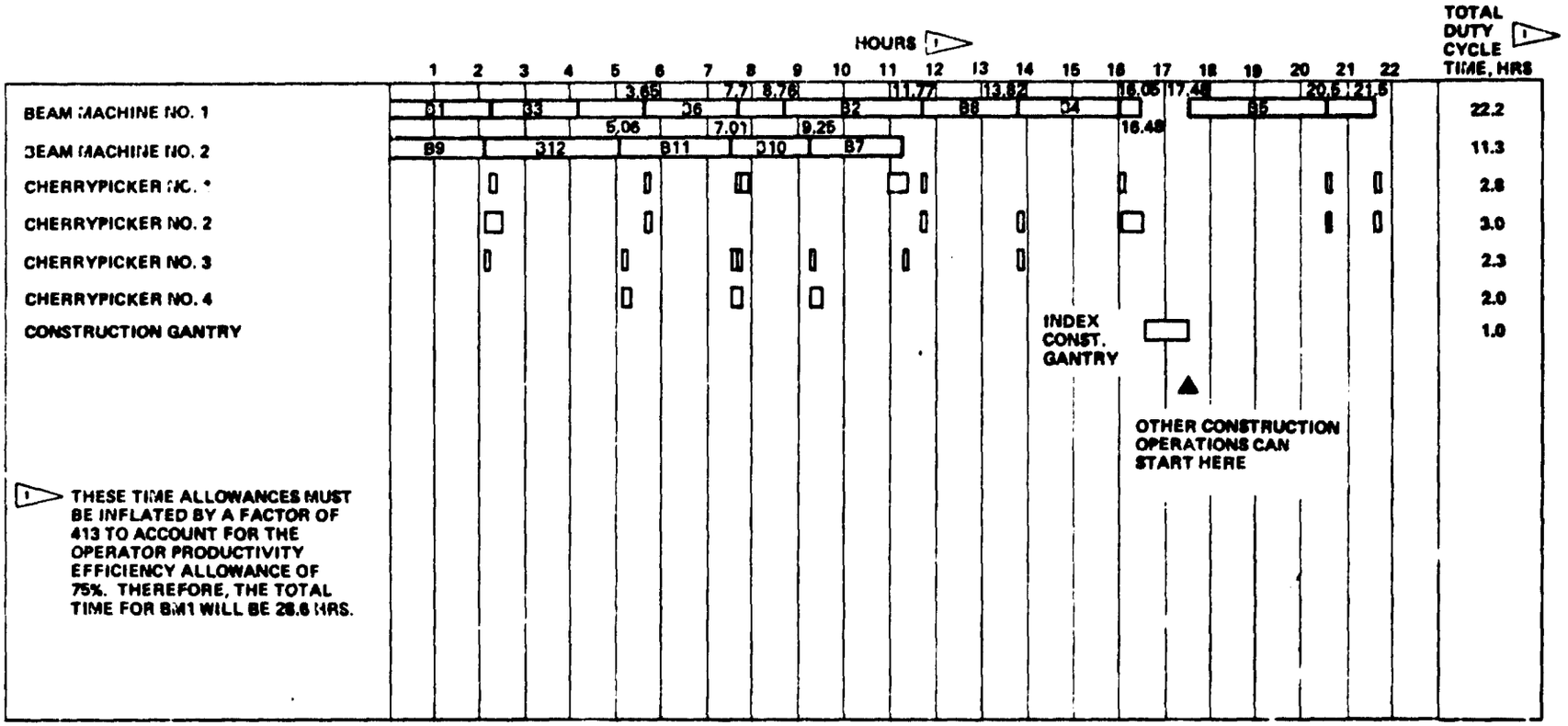

Figure 9-16. Block 1.1.1—Fabricate and Assemble Structure—Equipment Duty Cycles

Block 1.1.2 Deploy Solar Array

The functional flow sequence for the solar array deployment operation is shown in Figure 9-17. This operation requires the set of solar array deployment equipment described in WBS 1.2.2.1.2.5. The set is composed of 1) a solar array deployer gantry with some attached machines, and 2) a distal end installer machine. These equipment items are shown in Figure 9-18 and 9-19. The two sets of deployment equipment move into their respective starting positions immediately after the construction gantry has been indexed off to the side (Block 1.1.1.39). It will take 4 days to deploy 54 solar array blankets in each bay.

Block 1.1.3 Install Power Distribution System

The power distribution system installation operations being on day 4 of the 10-day construction time per bay (see Figure 9-7). Figure 9-20 shows the functional sequence for these operations.

A pair of 50m cherrypickers is employed to install the power bus support bracket subassemblies (WBS 1.3.2.2) and the switch gear subassemblies (WBS 1.3.2.2). These subassemblies are delivered to the installation areas from the subassembly factory (WBS 1.2.2.1.4) via cargo transporters (WBS 1.2.2.1.3.2).

After these subassemblies are installed, the power bus deployer machine (WBS 1.2.2.1.2.3) is used to deploy the sheet metal busses.

The power bus system installation operations take a total of 4 days and require 2 crewmembers each shift.

Block 1.1.4 Install Attitude Control System

The installation of the attitude control system (ACS) begins during day 2 of the 10 day construction time for each bay (see Figure 9-7). Figure 9-21 shows the functional sequence for these operations.

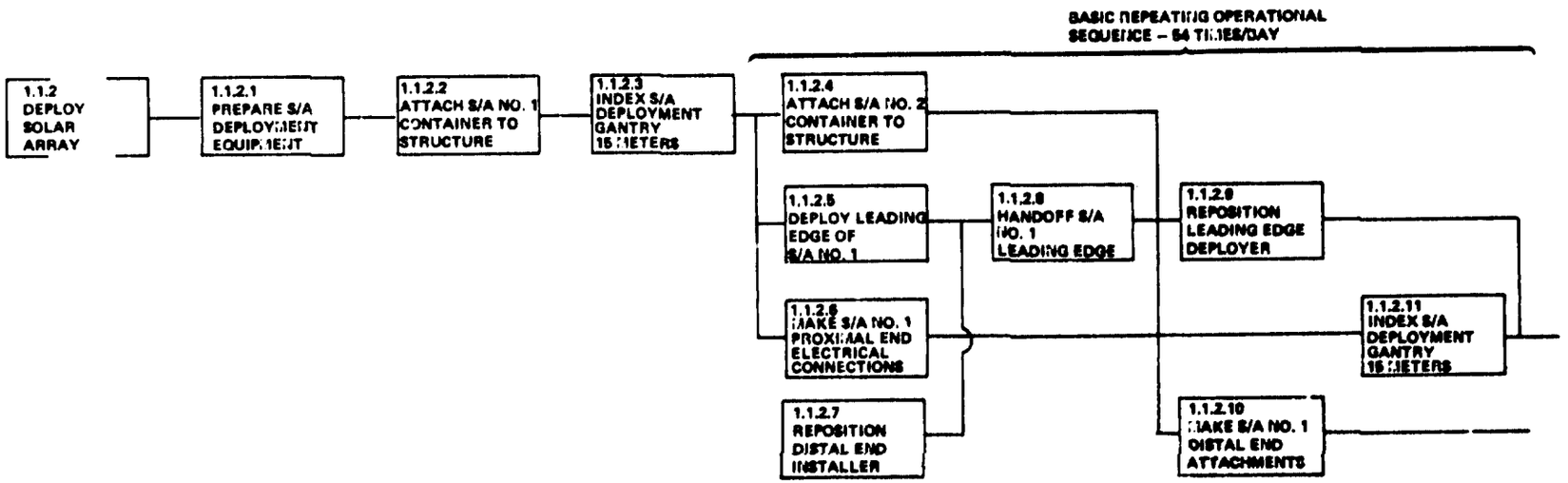

Figure 9-17. Block 1.1.2 Deploy Solar Array—4th Level Functional Flow

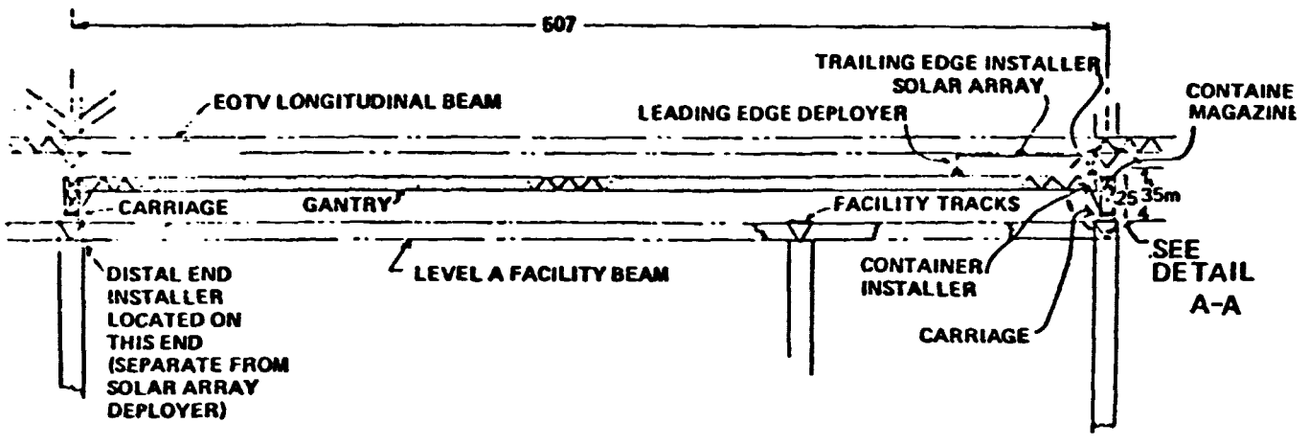

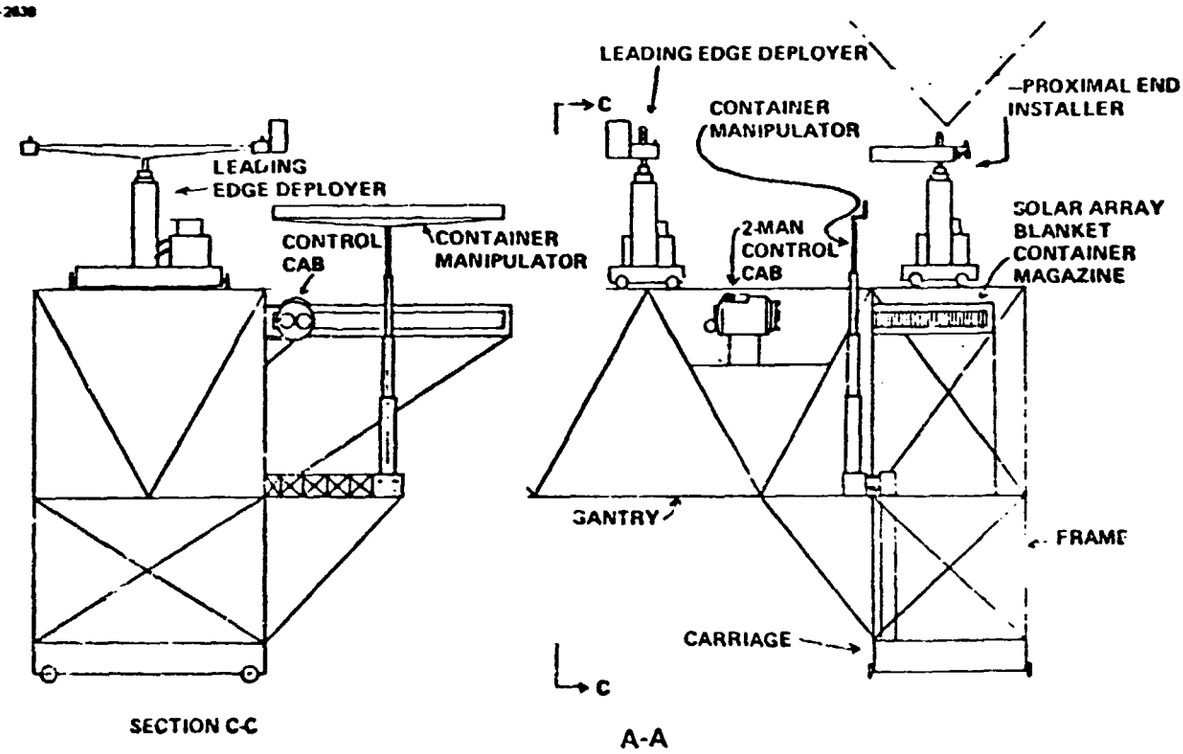

Figure 9-18. Solar Array Deployer

REPRODUCIBILITY OF THE
ORIGINAL PAGE IS POOR

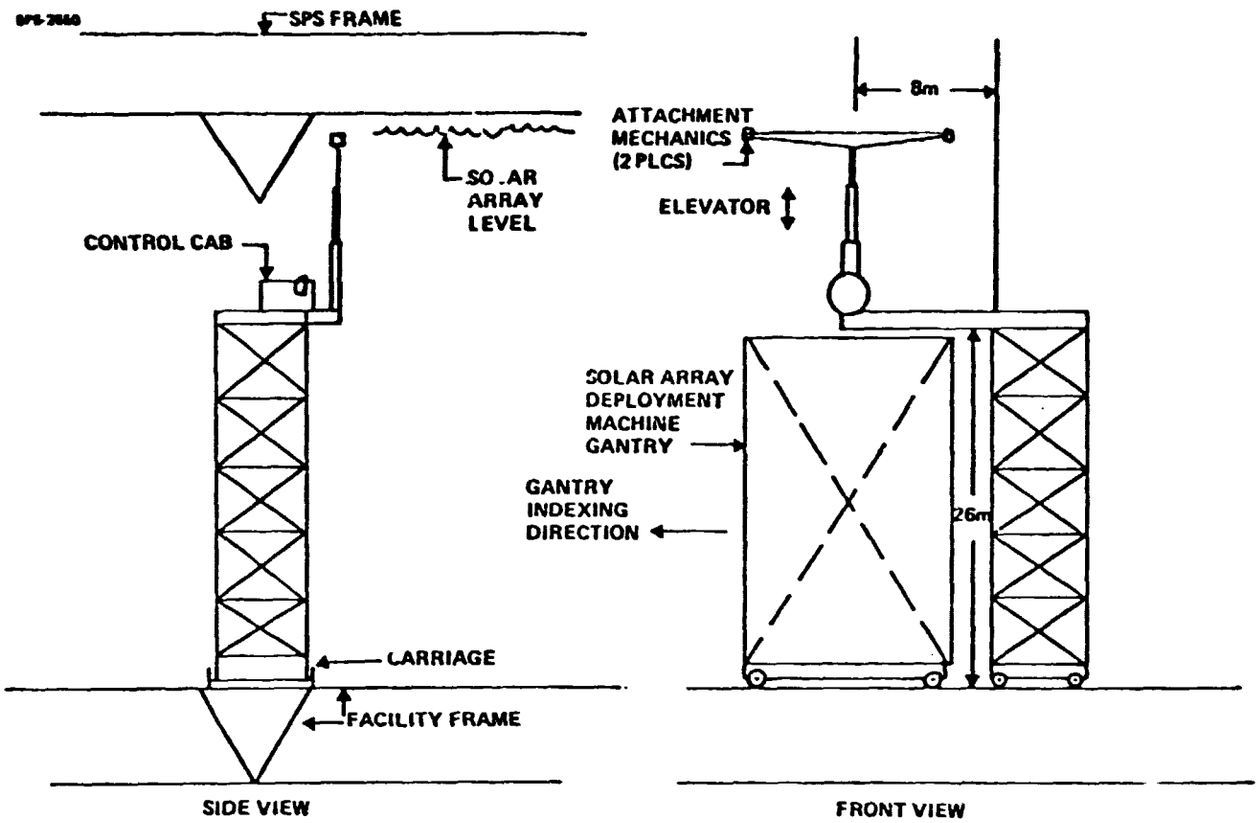

Figure 9-19. Distal End Installer

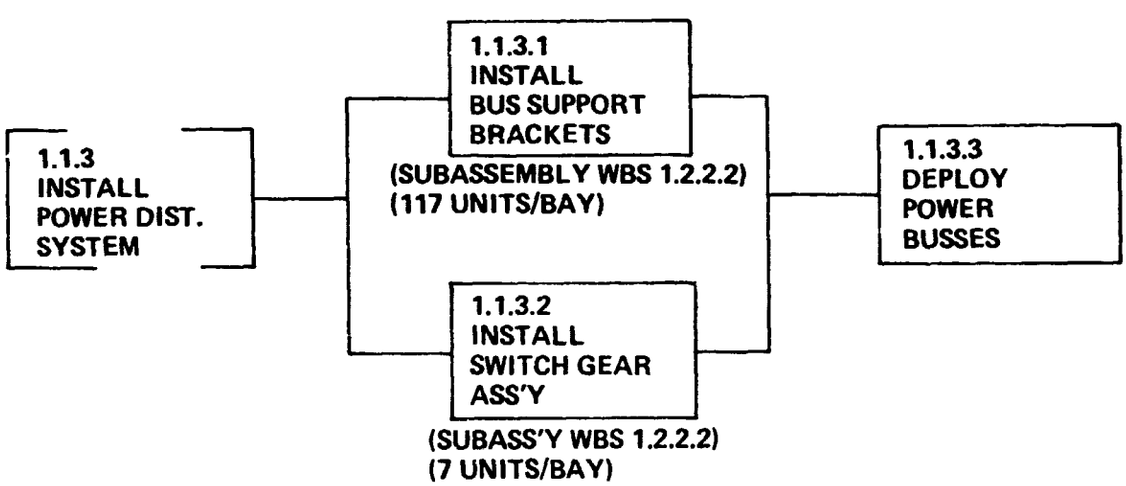

Figure 9-20. Block 1.1.3 – Install Power Distribution System (4th Level Functional Flow Chart)

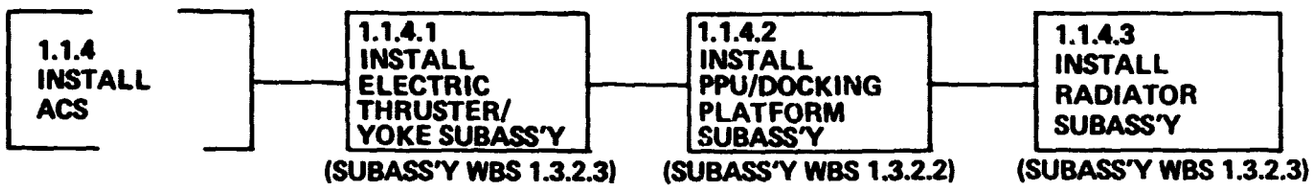

Figure 9-21. Block 1.1.4—ACS Installation Operations

A pair of 50m cherrypickers is employed to install the electric thruster/yoke subassembly (WBS 1.3.2.3), the PPU/docking platform subassembly (WBS 1.3.2.2), and the radiator subassembly (WBS 1.3.2.3). These subassemblies are delivered to the installation area from the subassembly factory (WBS 1.2.2.1.4) via cargo transporters (WBS 1.2.2.1.3.2).

The installation of the attitude control system takes 1 day and requires 2 crewmembers each shift.

Block 1.1.5 Install Other Subsystems

The "other" subsystems include the propellant delivery lines (cargo platform-to-ACS), avionics (computers, sensors, controls, etc.), control circuitry, etc. These items are installed over a 2-day period starting on day 6. These installation operations will require the 50m cherrypicker on the construction gantry, the 250m cherrypicker, and the 50m cherrypickers on Level A. These operations will require 2-4 crewmembers per shift.

Block 1.1.6 Assemble and Install Annealing Machines

The assembly and installation of the annealing machine starts during day 3 (see Figure 9-7). Figure 9-22 shows the functional flow.

The Level A beam machine fabricates the gantry beam (Block 1.1.6.2). A pair of cherrypickers assemble and install the various components. Subassemblies are delivered to the work site as required.

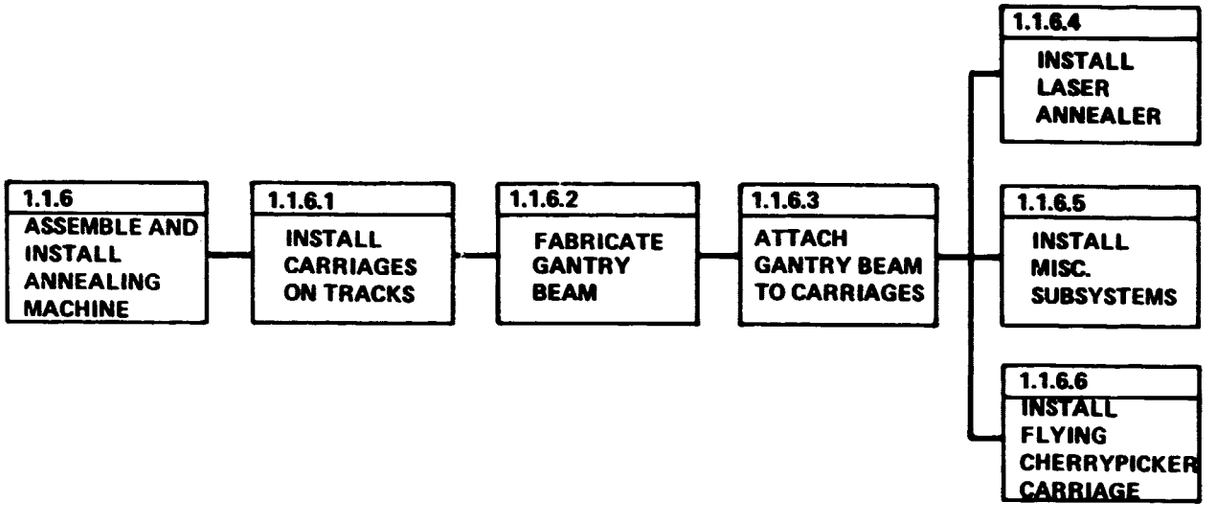

Figure 9-22. Block 1.1.6 – Assembly and Installation of the Annealing Machine

The annealing machine assembly requires 3-1/2 days and will require at least 2 crewmembers per shift.

2.3 Block 1.5 Assemble Cargo Platform

The cargo platform is assembled over a 10-day period concurrently with the assembly of Bay 3 (see Figure 9-6). The operational functional flow is shown in Figure 9-23.

The cargo platform is assembled under the overhead of the construction gantry. The platform structure will probably be a deployable area structure. This structure is attached to the 4 assembly/installation fixtures affixed to the construction gantry. After all of the subsystems are attached to the structure, the assembly is lowered onto the EOTV frame by the telescoping assembly/installation fixtures.

The cargo pallet assembly will require at least 2 of the 20m cherrypickers and 2 crewmembers each shift.

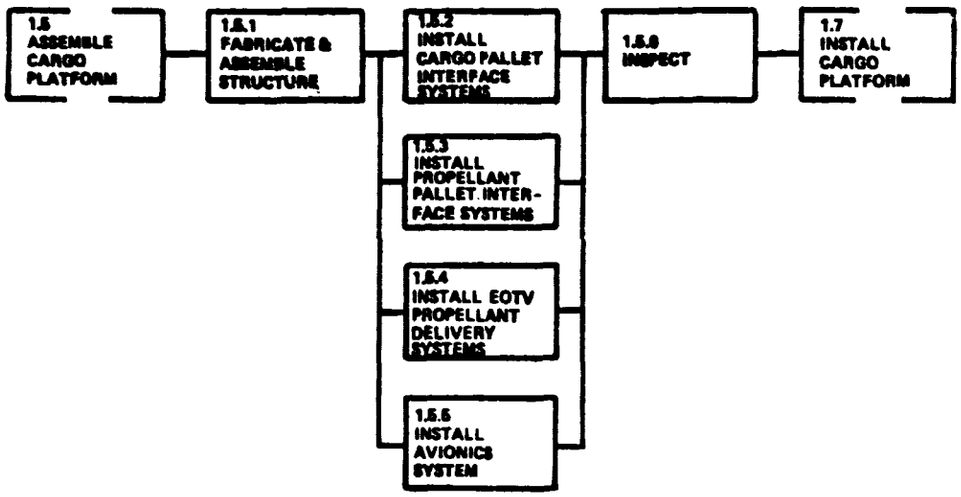

Figure 9-23. Cargo Platform Assembly Functional Flow

3.0 LOGISTICS OPERATIONS

The three major logistics operations categorized are shown in Figure 9-24. These operations and their subelement operations are described below.

3.1 SPACE VEHICLE SUPPORT OPERATIONS

The four major suboperational categories are shown in Figure 9-25.

3.1.1 Vehicle Docking Operations—(Refer to Sections 7, 8, and 10 of this document for additional details.)

The space vehicle traffic schedule is shown in Figure 9-26.

The HLLV and PLV docking operations are depicted in Figure 9-27. The docking systems (WBS 1.2.2.1.6.1.1) are operated from a control station at each docking area. There will be 1 or 2 HLLV's arriving each day of the week (8 per week). There will be 1 PLV arrivals per week. The rendezvous traffic control is provided by an operator at the LEO Base operations center.

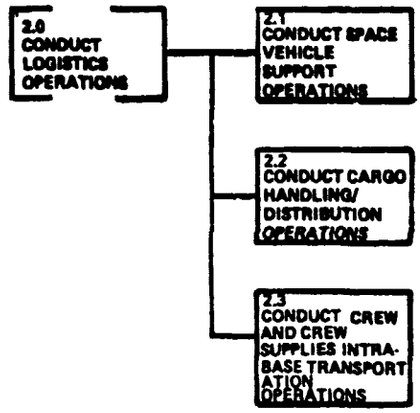

Figure 9-24. Logistics Operations

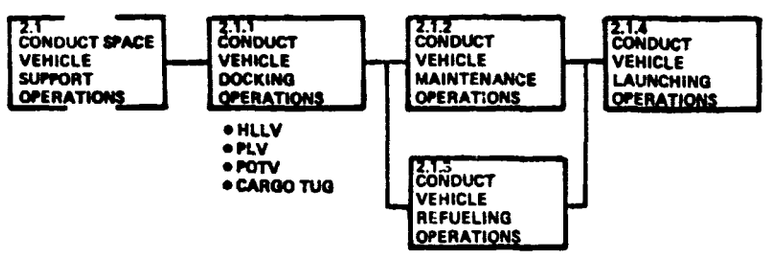

Figure 9-25. Space Vehicle Support Operations

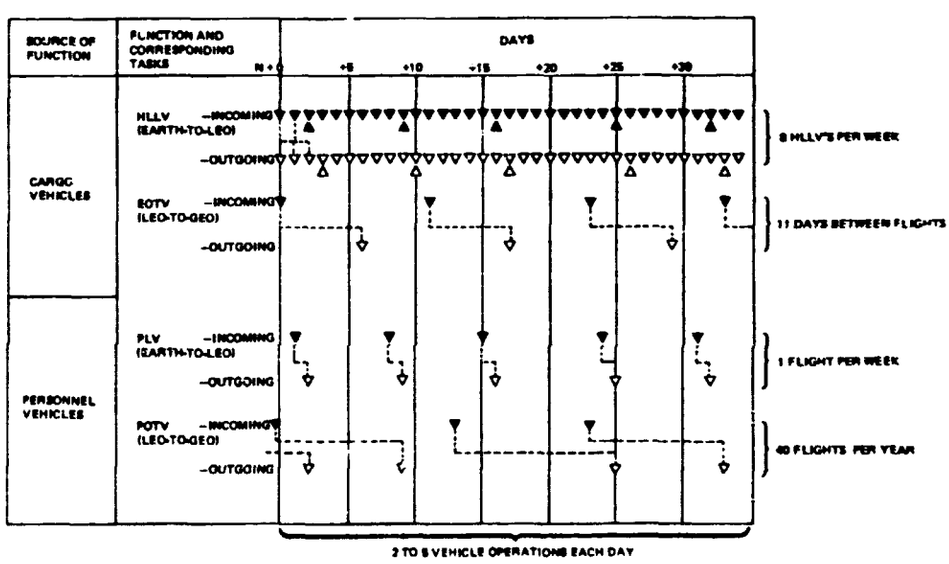

Figure 9-26. LEO Base Space Vehicle Traffic Schedule

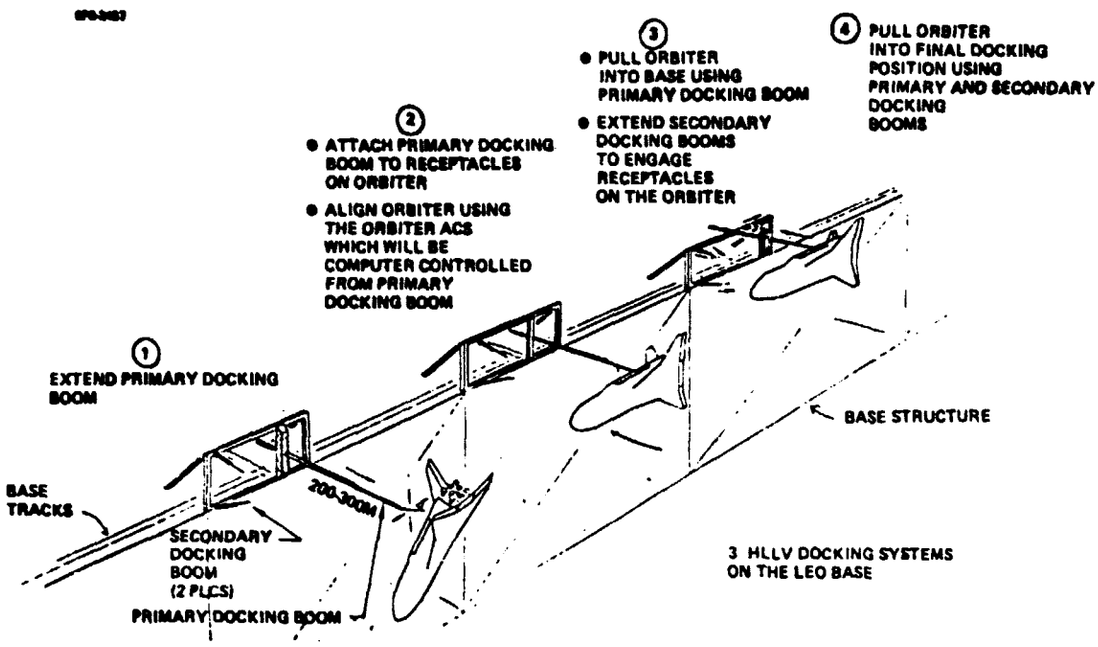

Figure 9-27. HLLV and PLV Docking Operations

There will be 1 POTV flight per week. The POTV flies into a nose-first docking. Figure 9-28 shows the POTV docked to the base. The on-board POTV flight crew controls the docking maneuvers.

The cargo tug also is flown into a nose-first docking, see Figure 9-29, under control of the on-board pilot.

The EOTV does not dock to the LEO Base. It is placed into a stationkeeping attitude 1 or 2 km away from the base. The EOTV stationkeeping is remotely controlled from the LEO Base operations center.

3.1.2 Space Vehicle In-Space Maintenance—(Refer to Section 11 of this document for additional details.)

The transportation vehicles that will be maintained in space include the EOTV, POTV, cargo tug, and SPS maintenance support vehicles (see Figure 9-30). The fleet sizes the base(s) where the various vehicles are to be maintained, and their

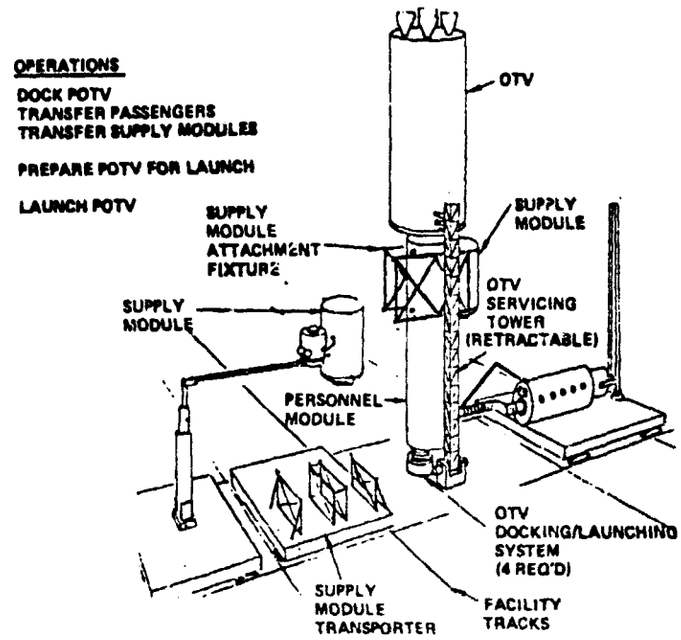

Figure 9-28. POTV Docking and Servicing Provisions

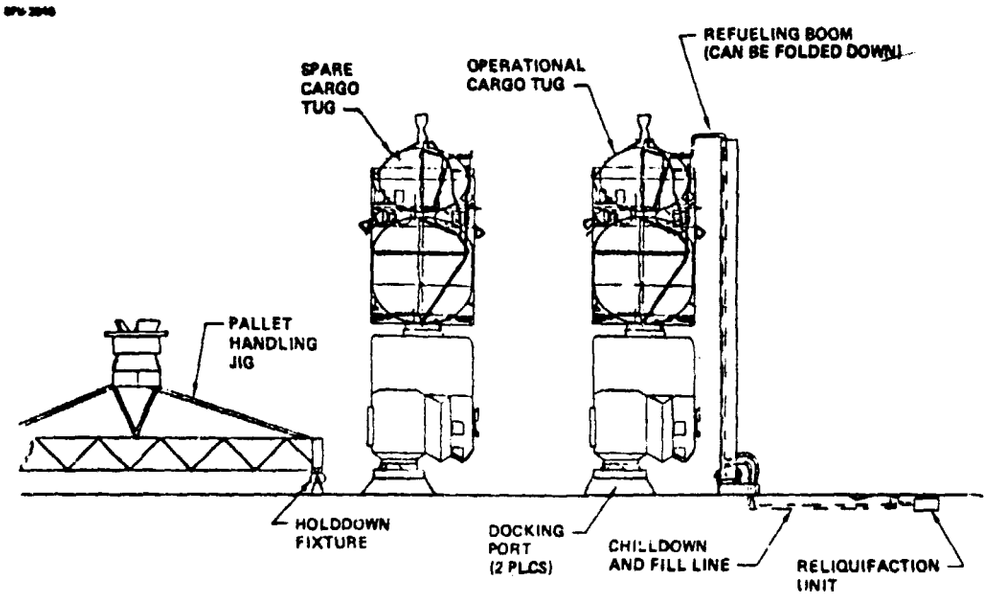

Figure 9-29. Cargo Tug Docking and Propellant Loading Provisions

VEHICLE	EOTV	POTV	CARGO TUG	SPS MAINT SUPPORT VEHICLES
	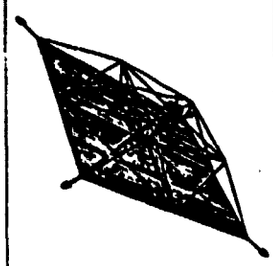	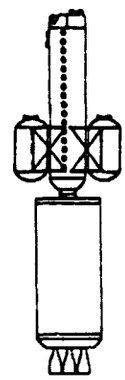	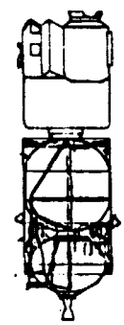	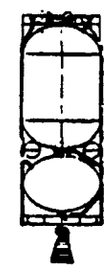
NO. OF VEHICLES IN FLEET	• 23	• 2 (1 + 1 SPARE)	• 2 AT LEO BASE • 2 AT GEO BASE	• 5 (4 + 1 SPARE)
WHERE MAINTAINED	• SOLAR ARRAY ANNEALED AT GEO BASE • EVERYTHING ELSE MAINTAINED AT LEO BASE	• LEO BASE	• LEO BASE • GEO BASE	• GEO BASE
MAINT FREQUENCY	• AT LEO BASE EVERY TRIP • AT GEO BASE EVERY TRIP	• AFTER EVERY ROUNDTRIP	• AFTER 15-20 FLTS	• AFTER 90 DAYS TOUR OF DUTY

THE HLLV AND PLV ORBITERS ARE MAINTAINED ON EARTH-NO IN-SPACE MAINTENANCE IS PLANNED

Figure 9-30. Space Vehicles and In-Space Maintenance Locations

maintenance frequencies are shown in the figure. Note that the HLLV and PLV orbiters are not to be maintained in space except for unplanned emergency repairs.

In general, the vehicles will be subject to "on-condition" or "condition monitored" maintenance. On-condition maintenance relies on the determination of the condition of a component or subsystem at specified intervals via measurement or test without removal or disassembly. Condition monitored maintenance relies on the maintenance requirements being determined by the monitoring of operational flight instrumentation, analysis of in-flight data for trends, and the detection of statistically significant recurring problems on a fleet-wide basis. These two concepts are oriented towards detecting existing or incipient failures using the least amount of test and checkout. Actual operational experience would be used to provide the functional check or measurement of performance. This maintenance approach is contingent on the existence of necessary instrumentation for obtaining maintenance significant data.

Figure 9-31 shows the general maintenance functional flow. After the specified number of flights, the vehicles receive a visual inspection and fault isolation checkout. The preprocessed flight data is telemetered back to Earth and analyzed. From these inputs, it will be possible to determine whether or not the vehicle can be immediately returned to service. If there is some maintenance required, a detailed maintenance plan is prepared by the Transport Vehicle Maintenance Group in the Transportation Vehicle Command and Control Center on Earth and this plan is then transmitted to the orbital base.

Vehicle maintenance crews stationed at each of the bases will perform the necessary maintenance. If the required maintenance jobs require more manpower, maintenance technicians and mechanics can be borrowed from other maintenance crews at the base (e.g., from the base systems maintenance crew). If the problem is very complex, specialists will be sent to the base from Earth. With the exception of the EOTV, the vehicle stages could be slipped back to Earth for major refurbishment if it becomes unfeasible to repair it in space.

The vehicle maintenance support equipment has been identified in WBS 1.2.2.1.6.4. This set of equipment would be required at each base. In addition to this equipment, at the LEO Base two flying cherrypickers and four thruster refurbishment machines are required.

With the exception of the EOTV, maintenance will be performed on the vehicles at their launch and docking pads so no dedicated working area is required. Adequate working area must be provided on the launching and docking area for the maintenance operations. Components that can be removed for refurbishment will be taken to the Maintenance Module located at each base.

3.1.3 Vehicle Refueling Operations

The vehicles to be refueled at the LEO Base are the cargo tug, EOTV's and POTV's.

The EOTV must be resupplied with propellant while at the LEO Base. A total of 469 MT of argon, 39.4 MT of LO_2, and 6.6 MT of LH_2 must be resupplied. It was ground ruled that each of the propellants be packaged in two tanks to provide

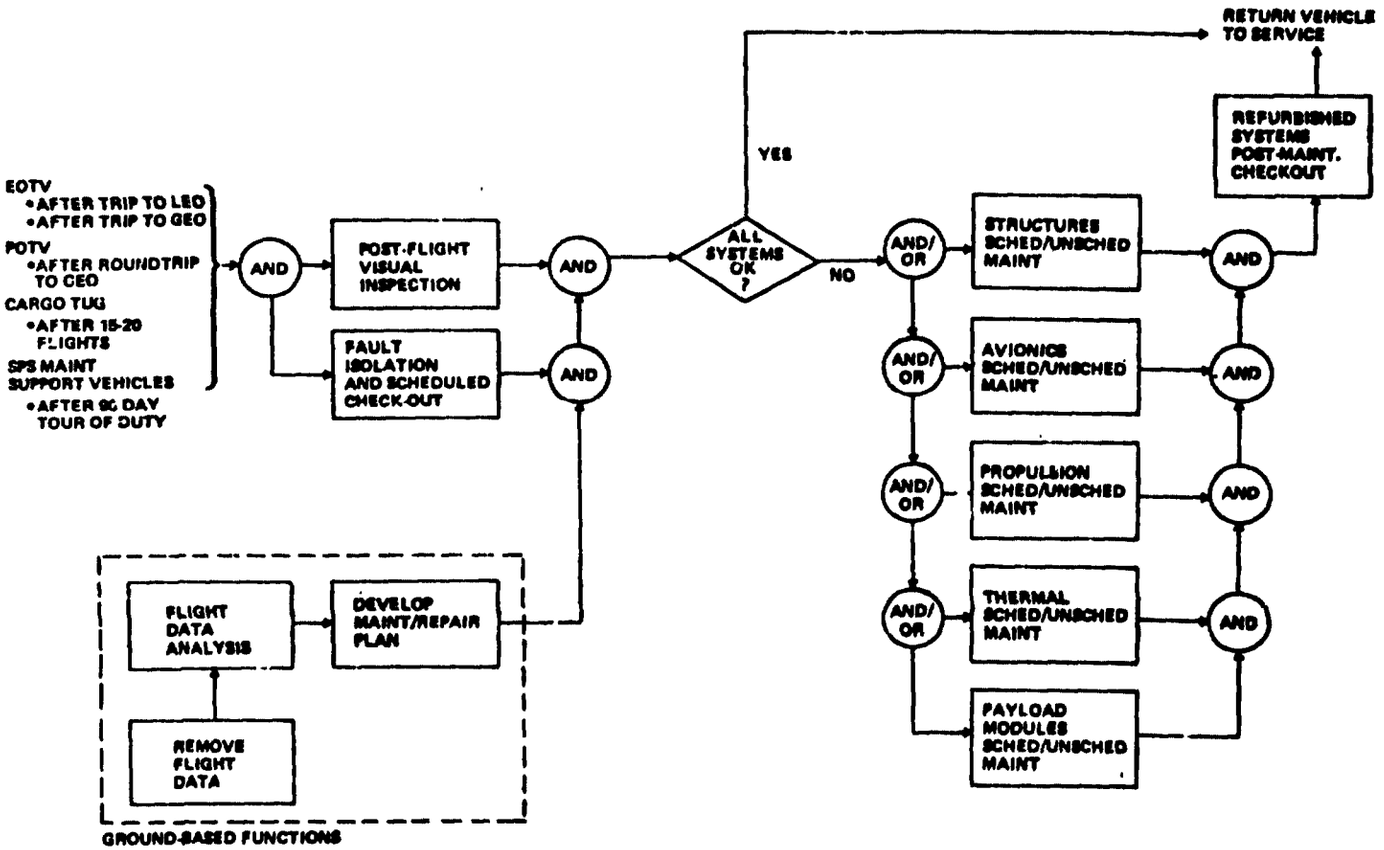

Figure 9-31. Space Vehicle Maintenance Flow

redundancy. The concept calls for placing the three loaded propellant tanks into a pallet that would be carried within the HLLV cargo pallet. At the LEO Base, the propellant pallet would be extracted from the cargo pallet and placed onto a cargo transporter. Figure 9-32 illustrates how this pallet is picked up by the cargo tug and flown to the EOTV. Note that an empty propellant pallet is returned from the EOTV first. Figure 9-33 illustrates how the propellant pallet is installed on the EOTV cargo platform. It takes two roundtrips to changeout the propellant pallets.

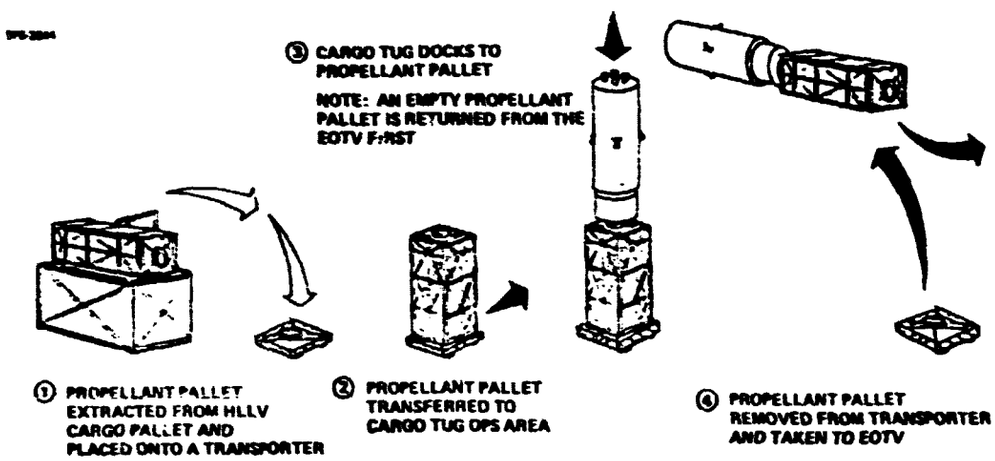

Figure 9-32. EOTV Propellant Pallet Handling Operations at the LEO Base

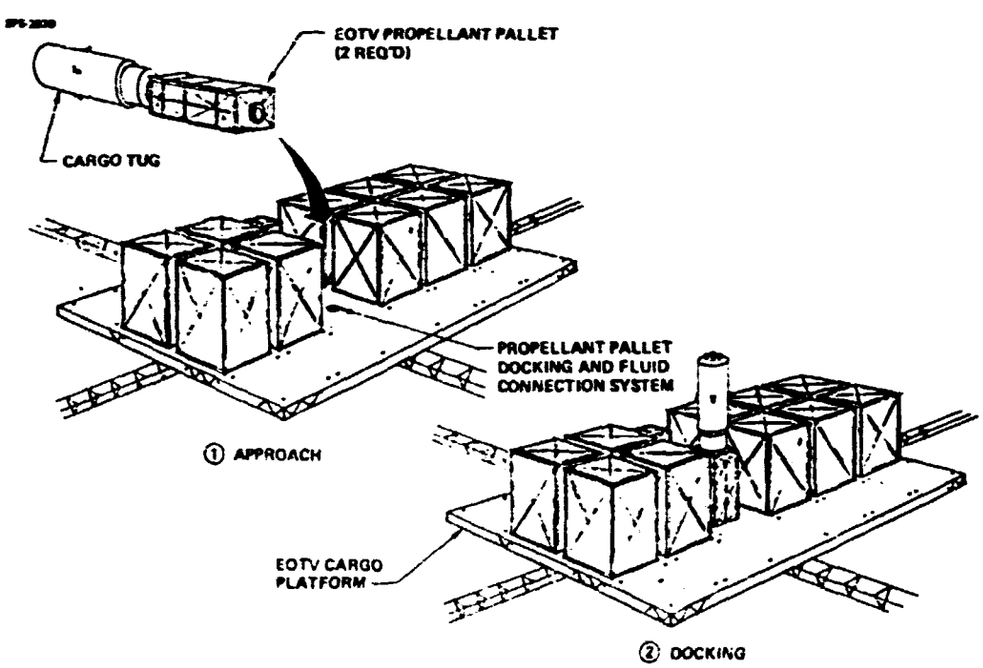

Figure 9-33. EOTV Propellant Pallet Docking Operations at the EOTV

The cargo tugs and POTV's are refueled from a central propellant storage and delivery system. The propellants are delivered to the base by HLLV tankers. The propellants are pumped from the tankers into storage tanks. The propellants are then conditioned and transmitted to the cargo tug and POTV docking systems for delivery to the vehicles.

3.1.4 Vehicle Launching Operations

The HLLV and PLV are launched away from the LEO Base using a reverse of the docking operations shown in Figure 9-27.

The POTV and cargo tug back away from the docking fixture using on-board retro-thrusters and/or by a "push-away" by the docking fixture.

3.2 CARGO HANDLING/DISTRIBUTION OPERATIONS

The functional flow of the cargo handling/distribution operations at the LEO Base are shown in Figure 9-34.

The HLLV is offloaded/reloaded by the pallet handling machine (described in WBS 1.2.2.1.3.1) and loaded onto cargo transporters (WBS 1.2.2.1.3.2). If the cargo within the pallet is to be used at the LEO Base, it is transported to the cargo sorting/storage area for processing (see WBS 1.2.2.1.3.3 and .4). The components are then delivered to construction equipment, subassembly factories, the POTV's, or to the crew modules.

If the pallets are destined for GEO, the cargo handling operations are as described below.

Figure 9-36 illustrates the overall EOTV cargo transportation systems and operations.

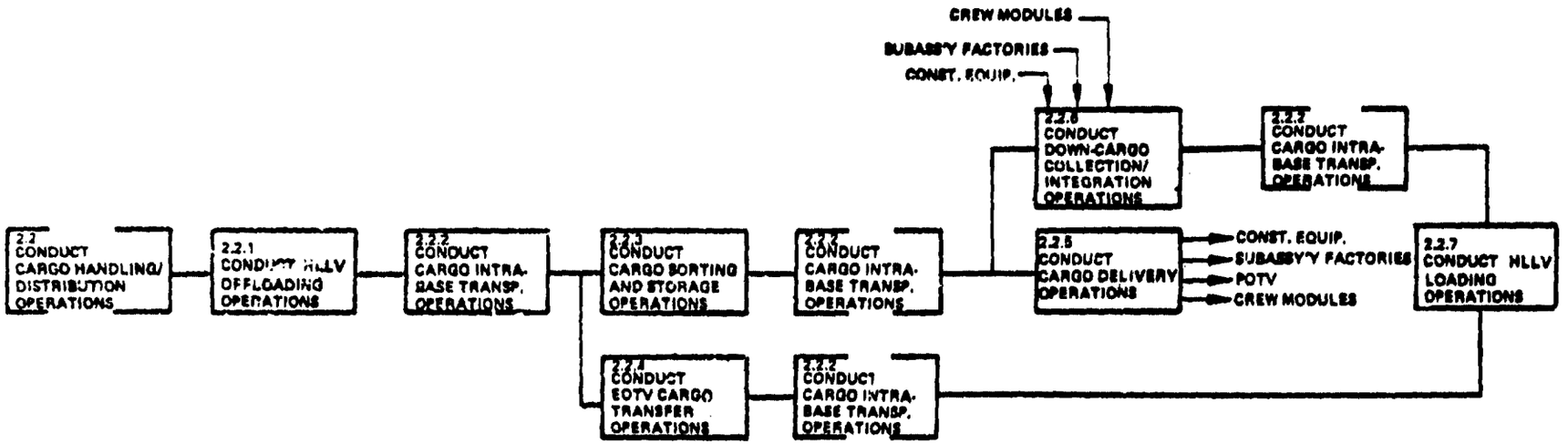

Figure 9-34. Cargo Handling/Distribution Operations

REPRODUCIBILITY OF THE
ORIGINAL PAGE IS POOR

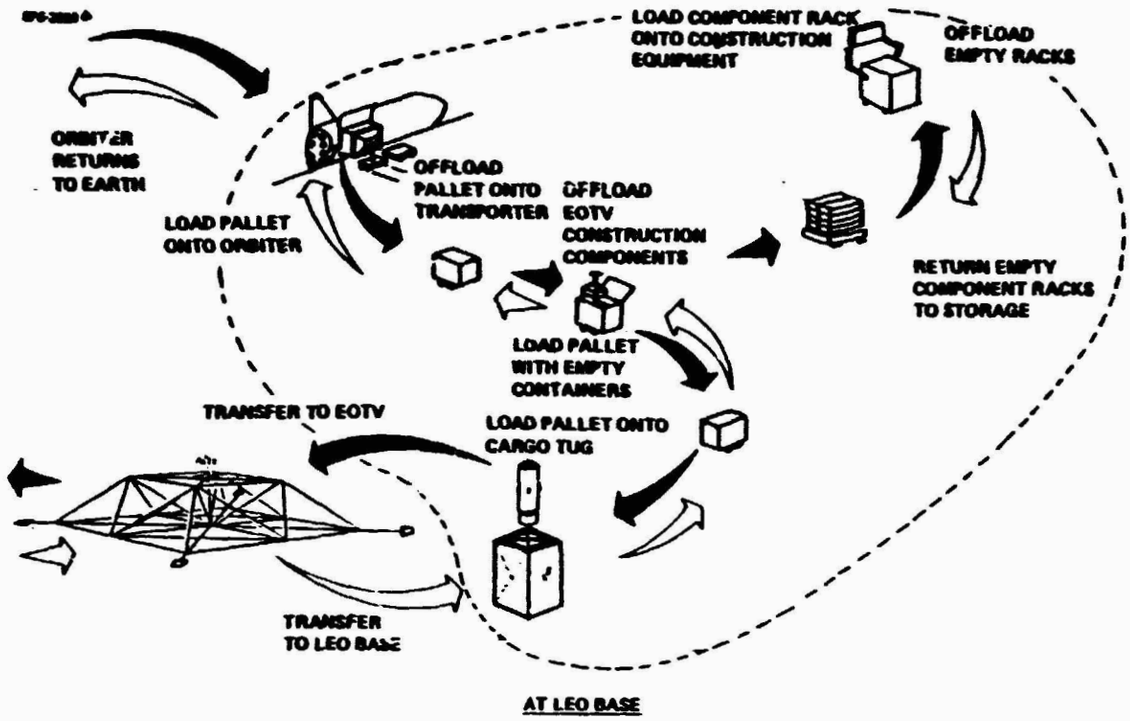

Figure 9-35. Cargo Handling Operational Flow Cycle

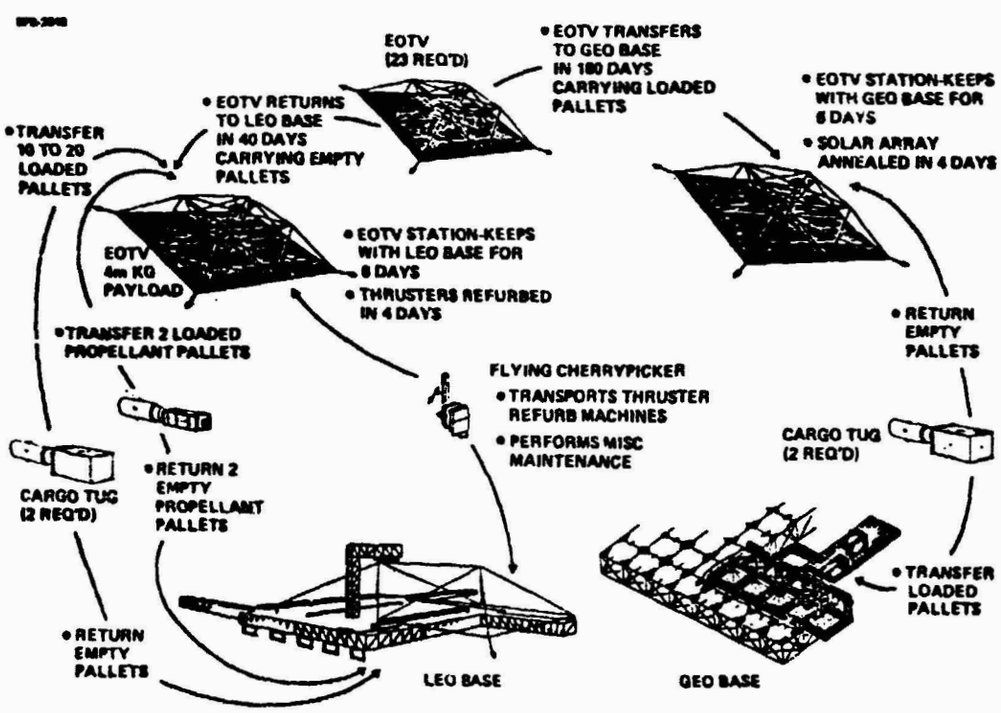

Figure 9-36. LEO-to-GEO Cargo Transportation Systems and Operations

At the LEO Base, an EOTV that has just returned from GEO is placed into a stationkeeping position approximately 1 km away from the base. A cargo tug flies over to the EOTV and picks up an empty cargo pallet and returns it to the LEO Base. (These empty pallets will eventually be returned to Earth on an HLLV.) A loaded cargo pallet is picked up at the base and transported to the EOTV by the cargo tug. This shuttling back and forth with empty and loaded cargo pallets continues until 10-20 cargo pallets are loaded onto the EOTV.

After the cargo pallets are loaded, the cargo tug picks up empty EOTV propellant pallets and returns them to the base. Two loaded propellant pallets will have been delivered to the LEO Base within HLLV cargo pallets. These two loaded propellant pallets are installed on the EOTV.

Figure 9-37 shows the timeline for the EOTV operations conducted at the LEO Base.

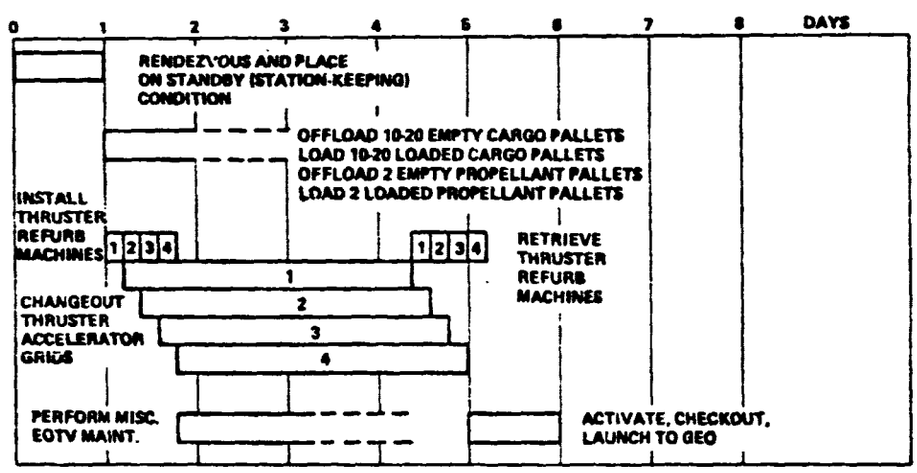

Figure 9-37. EOTV Operations at LEO

A total of 33 EOTV flights are required during a one year period in order to deliver the satellite components necessary to construct two 5 gw satellites per year. This requires that an EOTV be launched to GEO every 11 days. A total of 22 vehicles are required to maintain the required deliveries per year when taking into account EOTV performance due to solar array degradation. One additional vehicle is added to the fleet as a spare giving a total of 23 vehicles.

Additional cargo handling operations details are found in Sections 5, 8, and 10 of this document.

3.3 CREW/CREW SUPPLIES INTRABASE TRANSPORTATION OPERATIONS

The subfunctions of this operational category are shown in Figure 9.38. (Additional details are found in Section 7 of this document.

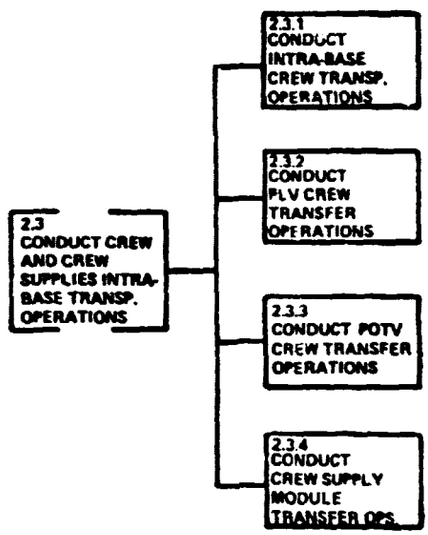

Figure 9-38. Crew and Crew Supplies Intrabase Transportation Operations

3.3.1 Intrabase Crew Transportation

The crews travel between habitable facilities/equipment/vehicles via either 10-man or 24-man crew busses (WBS 1.2.2.1.2.6.2). These vehicles are driven by an on-board driver. They are equipped with a hatch on one end that interfaces directly with a crew habitat airlock port. The other end of the crew bus is equipped with a manipulator/transfer capsule. This is used to transfer one or two crewmembers to construction equipment control cabs that cannot interface with the main crew bus access hatch.

3.3.2 PLV Crew Transfer Operations

The PLV passengers are transferred to the crew busses via a crew transfer tunnel system (WBS 1.2.2.1.2.6.1) located at each PLV docking system.

3.3.3 POTV Crew Transfer Operations

Figure 9-28 shows how the POTV passengers are transferred between the POTV and crew bus via a crew transfer tunnel attached to the crew bus.

3.3.4 Crew Supply Module Transfer Operations

The crew supply modules are transported to the LEO Base as an element within a cargo pallet. The crew supply module is processed as described in a previous section. When it is delivered to the POTV, it is removed from the transporter and moved to its attachment fixture on the POTV via a cherrypicker, see Figure 9-28.

3.4 CREW REQUIREMENTS

The logistics operations crew and crew organization are shown in Figure 9-39. A total of 84 people are required for these operations.

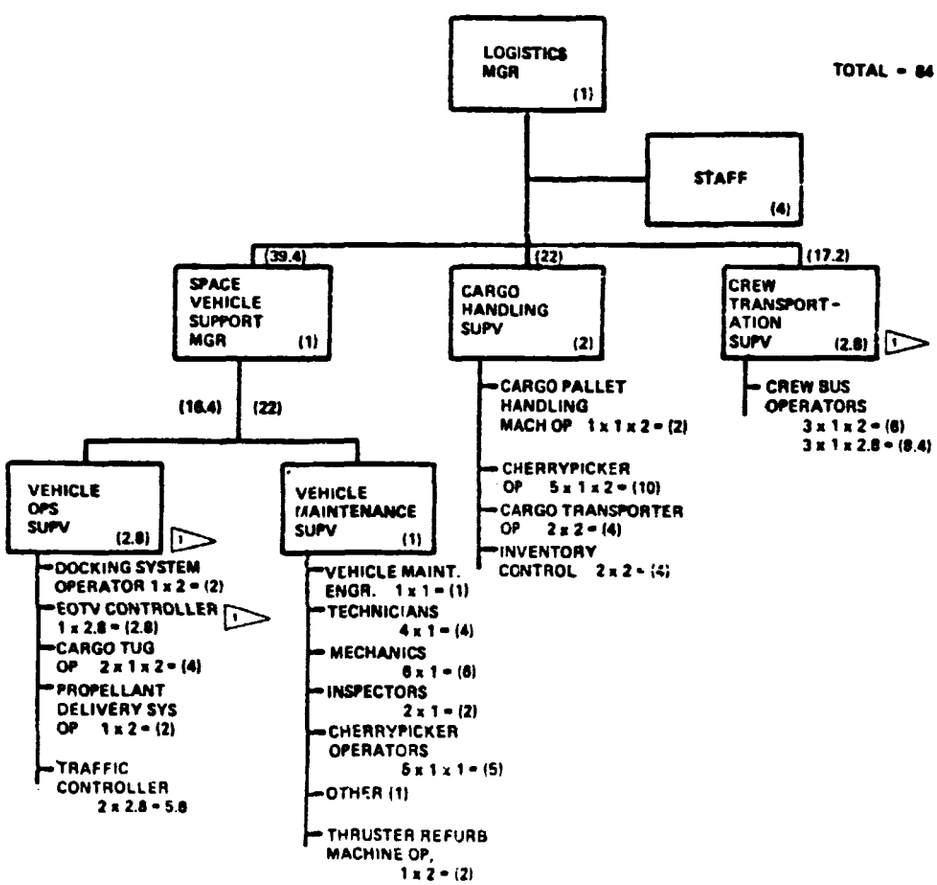

Figure 9-39. Logistics Operations Crew

4.0 BASE OPERATIONS

4.1 HABITATION OPERATIONS

The habitation operations include operation of the environmental control/life support and food service systems and conduction of the housekeeping and recreation provisions. These operations are conducted 24 hr/day, 7 days/week. At each crew habitat, including transient crew quarters when occupied.

4.2 ELECTRICAL POWER SUPPLY SYSTEM OPERATIONS

The base electrical power supply system (WBS 1.2.2.1.8.1) is controlled/monitored 24 hr/day, 7 days/week.

4.3 BASE ATTITUDE CONTROL/STATIONKEEPING SYSTEM OPERATIONS

The LEO Base flight control system (WBS 1.2.2.1.8.2) is controlled/monitored 24 hr/day, 7 days/week.

4.4 BASE MAINTENANCE OPERATIONS

The maintenance operations include maintenance of everything at the LEO Base except for space vehicles (maintenance for these were included in WBS 1.2.2.3.2). Most elements are maintained in place. Components that can be refurbished will be taken to the maintenance module for processing, maintenance will be scheduled during equipment idle times. Major maintenance requiring extended downtime will require spare equipment or redundant systems to be brought on-line.

4.5 CREW TRAINING OPERATIONS

The LEO Base will be used extensively as a zero-G training base for all of the GEO Base as well as LEO Base crewmembers. This training will include training for construction tasks, habitation tasks, operations tasks, and maintenance tasks. The training operations have not been defined in any detail.

4.6 CREW HEALTH AND SAFETY OPERATIONS

These operations will include the operation of the following: clinics, surgical facilities, X-ray equipment, dental facilities, medical laboratory, pharmacy, paramedic equipment, health monitoring systems, environmental safety hazard monitoring equipment, etc.

4.7 COMMUNICATION SYSTEMS OPERATIONS

The voice, video, and data communication systems will be operated 24 hours per day, 7 days per week.

4.8 DATA MANAGEMENT SYSTEM OPERATIONS

The LEO Base computer system will be operated 24 hours per day, 7 days per week so that base flight control and critical subsystems can be continuously monitored and controlled. Other data management system users will impose intermittent, scheduled demands.

4.9 CREW REQUIREMENTS

The crew size and organization required to perform the base operations are shown in Figure 9-40 integrated with all of the other crew identified in previous sections. A total of 229 people are required.

4.10 COMMAND AND CONTROL TASKS

The command and control tasks that have been identified for the LEO Base operations are listed in Table 9-1.

TABLE 9-1.

COMMAND AND CONTROL TASKS

LOCATION/OPERATION: LEO Base Operations

FUNCTION/TASKS	COMMAND & CONTROL TASKS	INTERFACE	
		INTERNAL	EXTERNAL
EOTV CONSTRUCTION OPS	. Receive EOTV construction management directives (schedule changes, priorities, work-around strategies, etc.) from ground-based EOTV construction C&C group.		*
	. Manage day-to-day EOTV construction activities (status monitoring schedule adjustment, work-arounds, equipment allocations, personnel assignments, etc.)	*	
	. Provide EOTV construction status reports.		*
	. Coordinate EOTV construction operations with other LEO Base Ops. (EOTV indexing maneuvers, gantry indexing maneuvers, vehicle docking, cargo delivery, etc.)	*	
	. Monitor/control construction equipment maintenance operations.	*	
	. Coordinate EOTV activation with transportation C&C		*

PRECEDING PAGE BLANK NOT FILMED

TABLE 9-1.

COMMAND AND CONTROL TASKS

LOCATION/OPERATION: LEO Base Operations

FUNCTION/TASKS	COMMAND & CONTROL TASKS	INTERFACE	
		INTERNAL	EXTERNAL
SPACE VEHICLE SUPPORT OPS			
. HLLV Ops. (See Earth-to-LEO Cargo Transportation System Ops data)			
. PLV Ops. (See Personnel Transportation System Ops Data)			
. POTV Ops (See Personnel Transportation System Ops data)			
. EOTV Ops (See LEO-to-GEO Cargo Transportation Ops data)			
. Cargo Tug Ops (See LEO-to-GEO Cargo Transportation Ops data)			
. Propellant Storage & Distribution Ops (See Ops data referenced for each vehicle type).			
. Vehicle Maintenance Ops (See Space Vehicle In-Space Maintenance Ops data).			

TABLE 9-1.

COMMAND AND CONTROL TASKS

LOCATION/OPERATION: LEO Base Operations

FUNCTION/TASKS	COMMAND & CONTROL TASKS	INTERFACE	
		INTERNAL	EXTERNAL
SPACE VEHICLE SUPPORT OPS - Cont.			
. External Vehicle Traffic Control	. Receive vehicle arrival/departure schedules.		*
	. Monitor vehicle traffic in vicinity of LEO Base	*	
	. Issue vehicle approach/departure vectoring commands		*
	. Receive vehicle status reports		*
	. Provide traffic control status reports.		*
CARGO HANDLING/DISTRIBUTION OPS			
. HLLV Loading/Unloading Ops (See Earth-to-LEO Cargo Transportation Ops data)			
. EOTV Landing/Unloading Ops (See LEO-to-GEO Cargo Transportation Ops data)			
. POTV Cargo Loading/Unloading Ops (See Personnel Transportation System Ops data)			

TABLE 9-1.

COMMAND AND CONTROL TASKS

LOCATION/OPERATION: LEO Base Operations

FUNCTION/TASKS	COMMAND & CONTROL TASKS	INTERFACE	
		INTERNAL	EXTERNAL
CARGO HANDLING/DISTRIBUTION OPS - Cont.			
. Cargo Intra-Base Transportation Ops	. Monitor status of all cargo transporters (20-30 units). (availability, location, destination, etc.)	*	
	. Control movement of all cargo transporters (activate, deactivate, control movement, switching, etc.)	*	
	. Coordinate cargo transporter maintenance reqm'ts with Base equipment maintenance group.	*	
. Cargo Sorting & Storage Ops	. Receive cargo manifest		*
	. Receive cargo storage location roadmap		*
	. Record storage locations of each component	*	
	. Receive cargo distribution instructions		*
	. Record removal of components from storage	*	
	. Maintain inventory control records	*	

TABLE 9-1.

COMMAND AND CONTROL TASKS

LOCATION/OPERATION: LEO Base Operations

FUNCTION/TASKS	COMMAND & CONTROL TASKS	INTERFACE	
		INTERNAL	EXTERNAL
. Cargo Distribution Ops	. Receive user equipment component delivery requirements		*
	. Integrate cargo delivery requests	*	
	. Issue cargo distribution instructions to warehouse.	*	
	. Monitor cargo delivery operations including machine loading.	*	
	. Coordinate support equipment usage requests	*	
	. Maintain records	*	
BASE EQUIPMENT MAINTENANCE OPS	. Receive base equip. maint. plan from ground-based control group		*
	. Receive equipment maintenance requests	*	
	. Coordinate, monitor, control base equipment maint. ops.	*	
	. Report status of base equipment maintenance.		*

TABLE 9-1.
COMMAND AND CONTROL TASKS

LOCATION/OPERATION: LEO Base Operations

FUNCTION/TASKS	COMMAND & CONTROL TASKS	INTERFACE	
		INTERNAL	EXTERNAL
BASE SUBSYSTEMS OPS			
. Electrical Power System	. Issue maintenance requests		*
	. Report status of base electrical power system.		*
. Flight Control System	. Receive base orbit-keeping and attitude control maneuver parameters from ground-based tracking		*
	. Issue maintenance requests		*
	. Report status of base flight control system.		
COMMUNICATIONS OPS	. Issue maintenance requests		*
	. Report status of system		*
DATA PROCESSING OPS	. Issue maintenance requests		*
	. Report status of system		*

TABLE 9-1.
COMMAND AND CONTROL TASKS

LOCATION/OPERATION: LEO Base Operations

FUNCTION/TASKS	COMMAND & CONTROL TASKS	INTERFACE	
		INTERNAL	EXTERNAL
CREW SUPPORT OPS	. Issue habitat systems maintenance requests		*
	. Report status of habitat systems and consummables		*
	. Report status of base personnel		*
	. Schedule hotel ops	*	

SECTION 10

LEO-TO-GEO CARGO TRANSPORTATION SYSTEM OPERATIONS

		Page
1.0	Integrated LEO-to-GEO Cargo Transportation System Operations.	10-1
2.0	LEO-to-GEO Cargo Transportation Vehicles.	10-6
3.0	LEO-to-GEO Cargo Transportation Support System and Operations.	10-11
3.1	LEO Base LEO-to-GEO Cargo Transportation Support Systems and Operations.	10-11
3.2	GEO Base LEO-to-GEO Cargo Transportation Support Systems and Operations.	10-18
3.3	LEO-to-GEO Cargo Transportation Command and Control Systems and Operations.	10-20

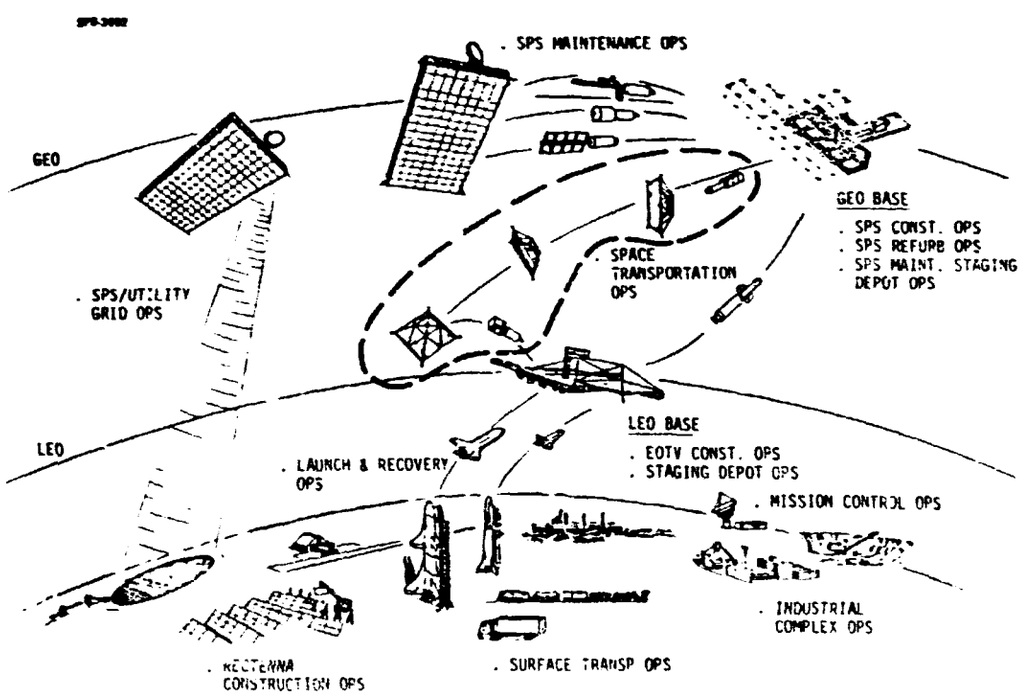

SECTION 10

LEO-to-GEO Cargo Transportation System Operations

1.0 INTEGRATED LEO-TO-GEO CARGO TRANSPORTATION SYSTEM OPERATIONS

Figure 10-1 illustrates the overall LEO-to-GEO cargo transportation systems and operations.

At the LEO Base, an Electric Orbital Transfer Vehicle (EOTV) that has just returned from GEO is placed into a station keeping position approximately 1 km away from the base. A cargo tug flies over to the EOTV and picks up an empty cargo pallet and returns it to the LEO Base. (These empty pallets will eventually be returned to Earth on an HLLV). A loaded cargo pallet is picked up at athe base and transported to the EOTV by the cargo tug. This shuttling back and forth with empty and loaded cargo pallets continues until 10-20 cargo pallets are loaded onto the EOTV.

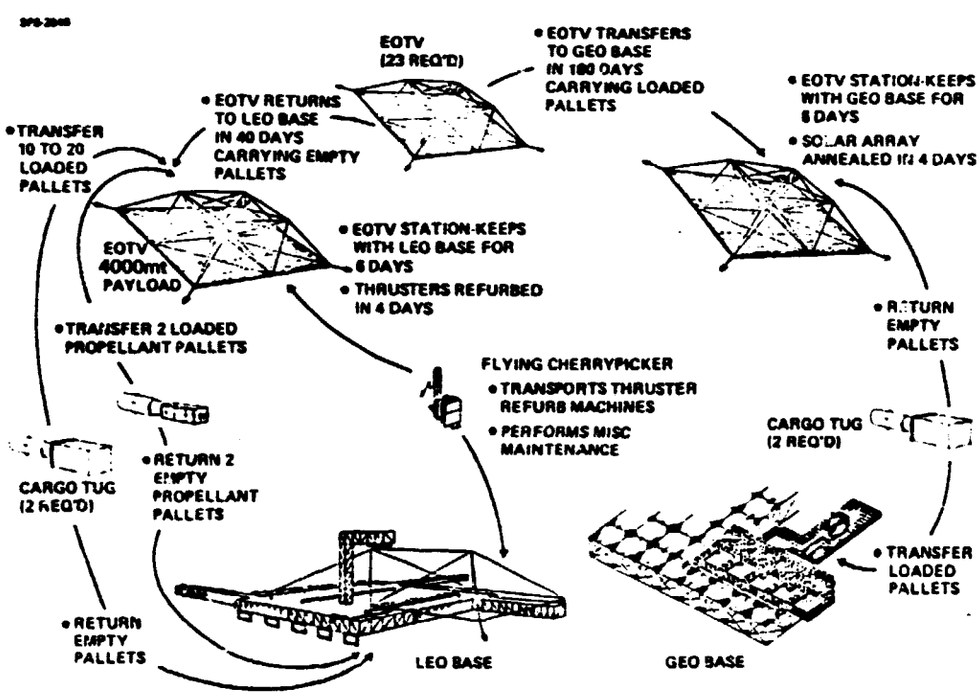

Figure 10-1. LEO-to-GEO Cargo Transportation Systems and Operations

After the cargo pallets are loaded, the cargo tug picks up empty EOTV propellant pallets and returns them to the base. Two loaded propellant pallets will have been delivered to the LEO Base within HLLV cargo pallets. These 2 loaded propellant pallets are installed on the EOTV.

While the cargo and propellant resupply operations are underway, a Flying Cherrypicker transports 4 thruster refurbishment machines to the EOTV. These machines are installed onto the EOTV attitude control system electric thruster yokes. The machines are used to changeout the thruster accellerator grids. The flying cherrypicker is also used to attend to miscellaneous maintenance tasks while the thruster refurb machines automatically perform their operations. After 4 days, the thruster refurb machines are retrieved and returned to the LEO Base. The defective components are processed at the Maintenance Module to recondition them for reuse. Table 10-1 summarizes the EOTV maintenance support systems at the LEO Base.

TABLE 10-1.

EOTV MAINTENANCE SUPPORT SYSTEM AND CREW SIZE AT THE LEO BASE

- o COMPONENTS TO BE REFURBISHED
  - o ION THRUSTER ACCELERATOR GRIDS
    - o 1036 PER EOTV (259 Per Thruster Ass'y)
    - o APPROX. 80 UNITS PER DAY TO BE REFURBED
  - o MISC. EOTV COMPONENTS
    - o PPU's, PUMPS, SWITCH GEAR, ETC.
    - o VERY FEW OF THESE
- o USE LEO BASE MAINTENANCE MODULE
- o EOTV MAINTENANCE SUPPORT EQUIPMENT
  - o 2 FLYING CHERRYPICKERS (1 Operational & 1 spare)
  - o 4 THRUSTER REFURB MACHINES
- o EOTV MAINTENANCE CREW

o FLYING CHERRYPICKER OPERATOR	2 per shift	= 4
o THRUSTER REFURB MACHINE OPERATOR	1 per shift	= 2
o COMPONENT REFURB	4 per shift	= 8
o EOTV MAINT. SUPV.	1 per shift	= 2
		16 Total

Figure 10-2 shows the timeline for the EOTV operations conducted at the LEO Base. Table 10-2 summarizes the support systems and crew.

At the GEO Base, an EOTV that has just arrived from LEO is placed into a station keeping position approximately 1 km from the base. A cargo tug transfers the loaded cargo pallets to the base and empty cargo pallets to the EOTV in the same fashion as was done at the LEO Base.

While the cargo pallet transfer operations are conducted, the annealing machines (that are permanently installed on the EOTV) are remotely activated. Over a four day period, the EOTV solar array is annealed.

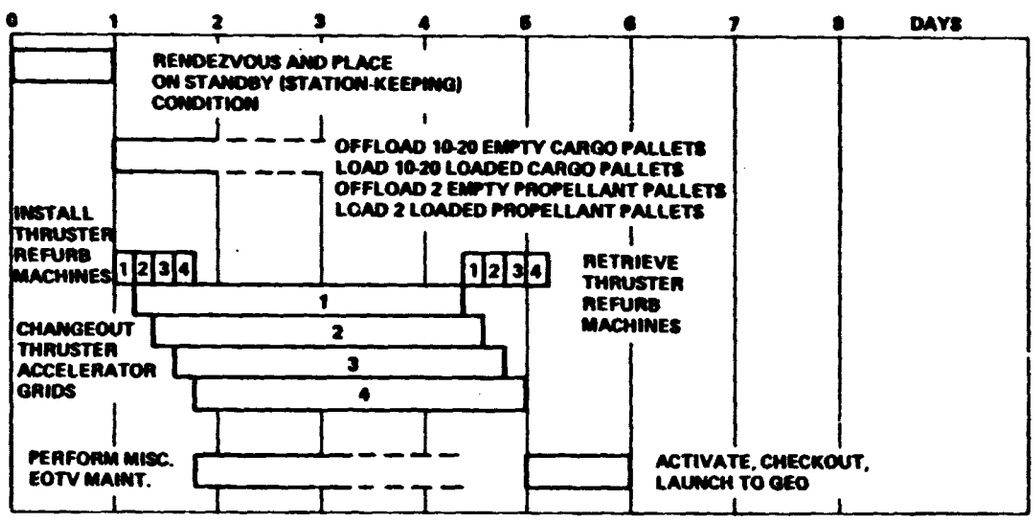

Figure 10-2. EOTV Operations of LEO

Figure 10-3 shows the timeline for the EOTV operations conducted at the GEO Base. Table 10-3 summarizes the support systems and crew.

Figure 10-4 shows the integrated EOTV flight schedule. A total of 33 EOTV flights are required during a one year period in order to deliver the satellite components, maintenance components, propellants, and non-perishable crew supplies. This requires that an EOTV be launched to GEO every 11 days. A total of 22 vehicles are required to maintain an average of 33 deliveries per year when taking into account EOTV performance due to solar array degredation. One additional vehicle is added to the fleet as a spare giving a total of 23 vehicles.

TABLE 10-2. LEO BASE EOTV OPERATIONS SUPPORT SYSTEMS AND CREW SIZE

VEHICLES (excludes maintenance vehicles - see Table 1)

2 Cargo Tugs (1 operational & 1 spare)

20 Cargo Pallet Transporters

3 Propellant Pallet Transporters

VEHICLE DOCKING PROVISIONS

2 Cargo Tug Docking Ports With Propellant Transfer System

2 Flying Cherrypicker Docking Ports

SUPPORT EQUIPMENT

- o 2 Cargo Pallet Handling Fixtures

LEO-to-GEO CARGO TRANSPORTATION SUPPORT CREW AT THE LEO BASE

o	Cargo Tug Operator	2 per shift = 4	
o	EOTV Controller	1 per shift = 2	
o	Traffic Controller	1 per shift = 2	(shared with the HLLV, PLV, and POTV functions)

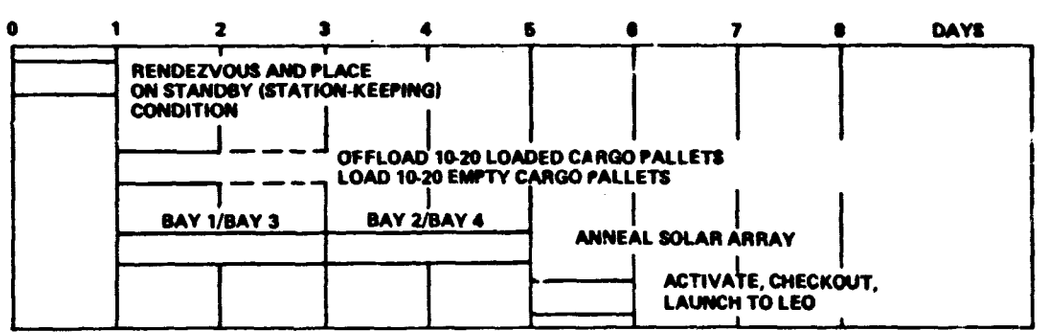

Figure 10-3. EOTV Operations at GEO

TABLE 10-3. GEO BASE EOTV OPERATIONS SUPPORT SYSTEMS AND CREW SIZE

VEHICLES

- o 2 Cargo Tugs (1 operational & 1 spare)
- o 20 Cargo Pallet Transporters

VEHICLE DOCKING PROVISIONS

- o 2 Cargo Tug Docking Ports With Propellant Transfer System

SUPPORT EQUIPMENT

- o 2 Cargo Pallet Handling Fixtures

LEO-to-GEO CARGO TRANSPORTATION SUPPORT CREW AT THE GEO BASE

o	Cargo Tug Operator	2 per shift = 4
o	Annealing Machine Operator	1 per shift = 2
o	EOTV Controller	1 per shift = 2

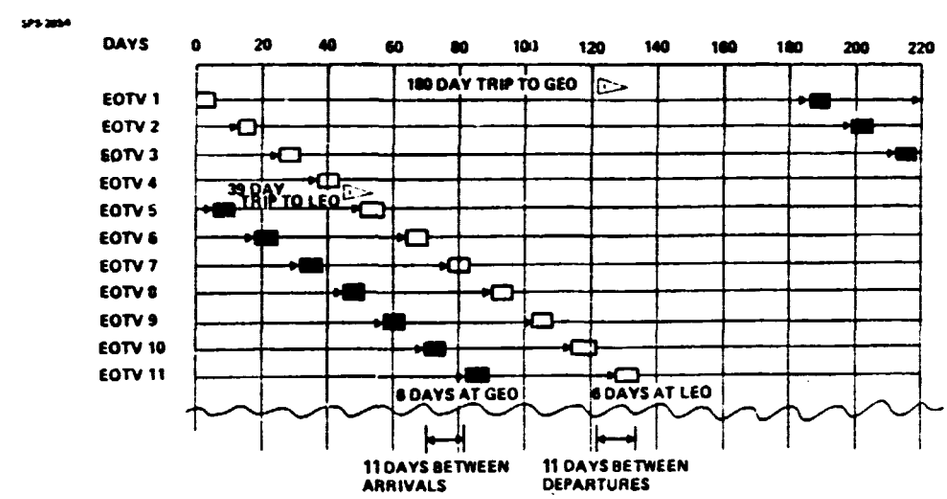

THE 180 DAY AND 39 DAY TRIP TIMES ARE THE EOTV "FIRST TRIP" PERFORMANCE CHARACTERISTICS. SUBSEQUENT FLIGHTS WILL TAKE LONGER, DUE TO SOLAR ARRAY DEGRADATION

Figure 10-4. EOTV Flight Schedule

2.0 LEO-TO-GEO CARGO TRANSPORTATION VEHICLES

2.1 EOTV—The reference EOTV is shown in Figures 10-5 and 10-6. Refer to WBS 1.3.2 for a detailed description of this vehicle.

The cargo platform that is located on the top of the EOTV is shown in Figure 10-7. This platform has holdown provisions for up to 20 cargo pallets and 2 propellant pallets. Each pallet holdown fixture has a corner reflector adjacent to it. These reflectors are used to reflect laser beams that are used to provide guidance information during the docking of the cargo tug and its attached payload (see sec. 2.2).

Twenty-three EOTV's are required (22 operational vehicles plus 1 spare).

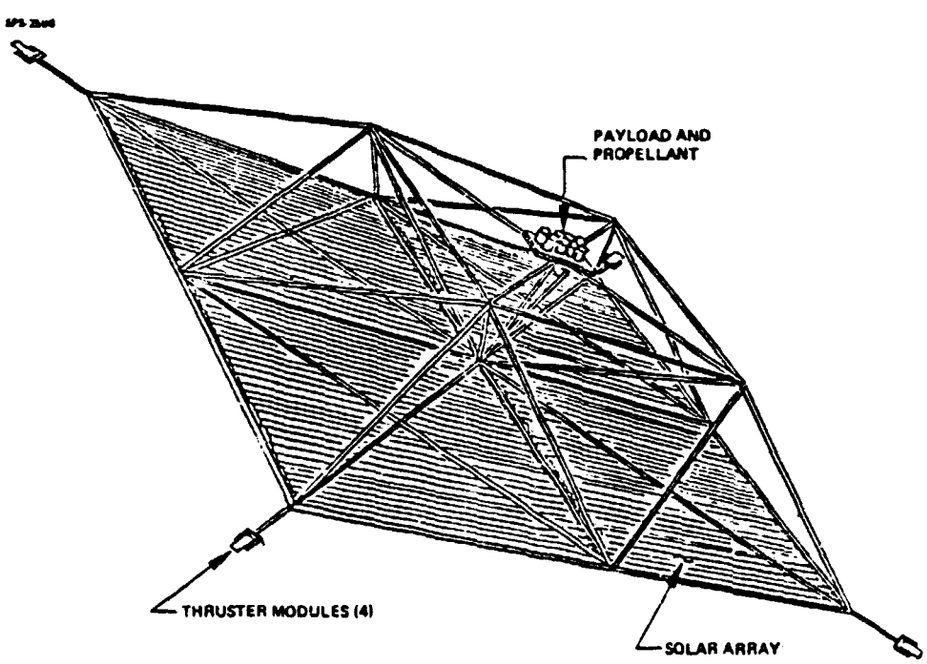

Figure 10-5. EOTV Configuration Concept

REPRODUCIBILITY OF THE
ORIGINAL PAGE IS POOR

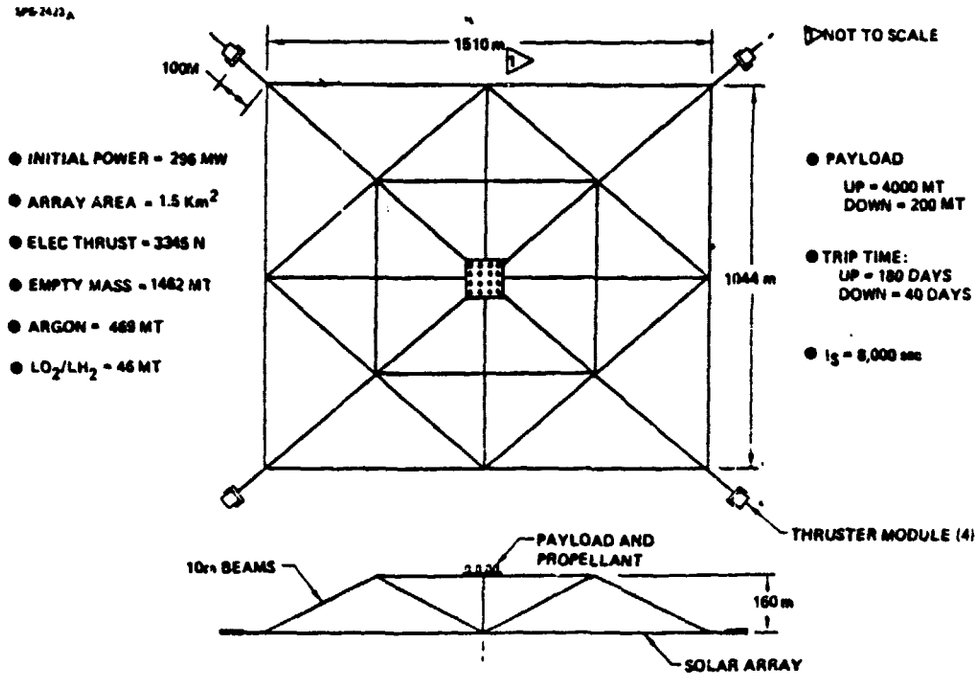

Figure 10-6. Electric OTV Configuration

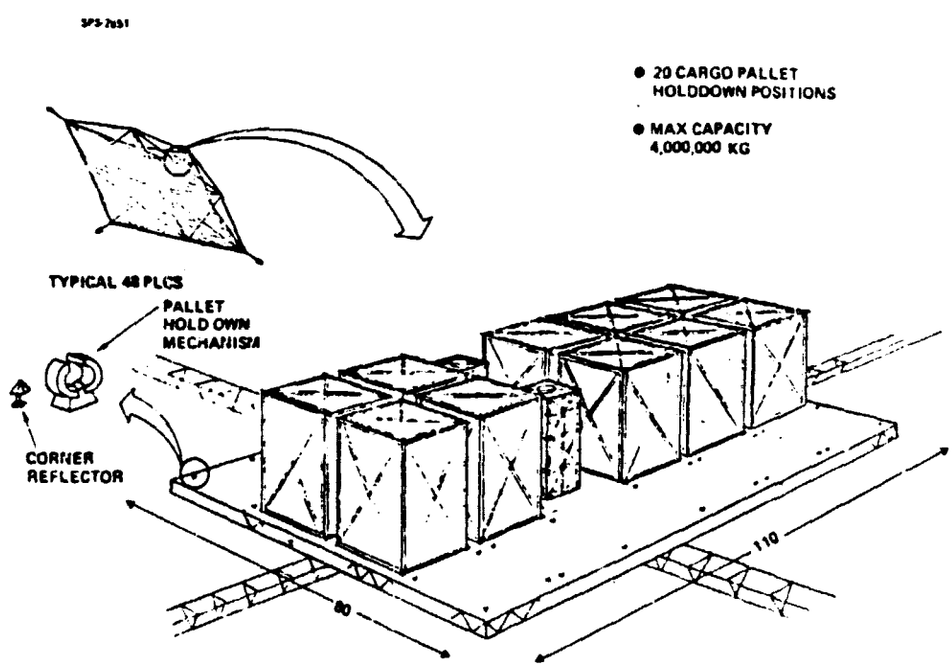

Figure 10-7. EOTV Cargo Platform

2.2 CARGO TUG—The conceptual configuration of the cargo tug is shown in Figure 10-8.

This vehicle is used to 1) transport cargo pallets and 2) to transport EOTV propellant pallets. The functional requirements for this vehicle are listed in Table 10-4. Two cargo tugs are required at each base (1 operational plus 1 spare).

Figure 10-9 shows the conceptual configuration of the cargo pallet handling fixture. This fixture has 4 pallet attachment mechanisms that latch onto the pallets holdown fixtures (the same ones that are used to attach the pallet to the HLLV cargo bay). Guidance laser radars are located at each corner of the handling fixture. They produce laser beams that would be reflected from corner reflectors located on the EOTV cargo platform. A microprocessor would resolve the laser radar guidance data to produce vehicle guidance commands that will allow the vehicle to precisely dock the cargo pallets into their holdown mechanisms.

Figure 10-10 shows the cargo tug docking and propellant loading provisions that would be required at each base. Docking provisions for 2 cargo tugs are required at each base.

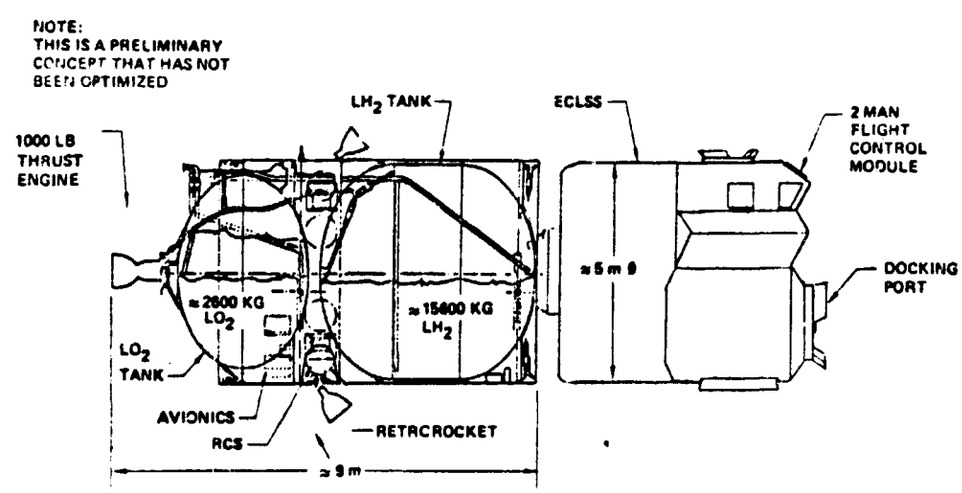

REFERENCE: BOEING AEROSPACE COMPANY OTV PROPOSAL, APRIL 1979

Figure 10-8. Cargo Tug

TABLE 10-4. CARGO TUG FUNCTIONAL REQUIREMENTS

Provide the following

1. 2-man flight control cabin

2. Docking fixture on the nose of the crew cabin (mates with the pallet handling fixture, the propellant pallet, and to a docking port at the bases)

3. Electrical connector incorporated into the docking fixture that provides an interface with the crew cabin controls and displays used for these systems:

   a. Cargo pallet handling fixture gimbol
   b. Cargo pallet handling fixture attachment mechanisms
   c. Laser guidance system
   d. EOTV pallet holdown mechanisms
   e. Propellant tank fluid coupling mating mechanism

4. Must be able to back up TBD meters carrying a full load

5. Vehicle sizing criteria

   - 400,000 Kg payload (Max)
   - 1 km trips
   - Refuel after 12 round trips
   - Transit time 5 to 30 minutes

6. Refueled from a propellant transfer system colocated with the docking port on the LEO and GEO bases.

   - Propellants delivered on a pallet carried within a cargo pallet.

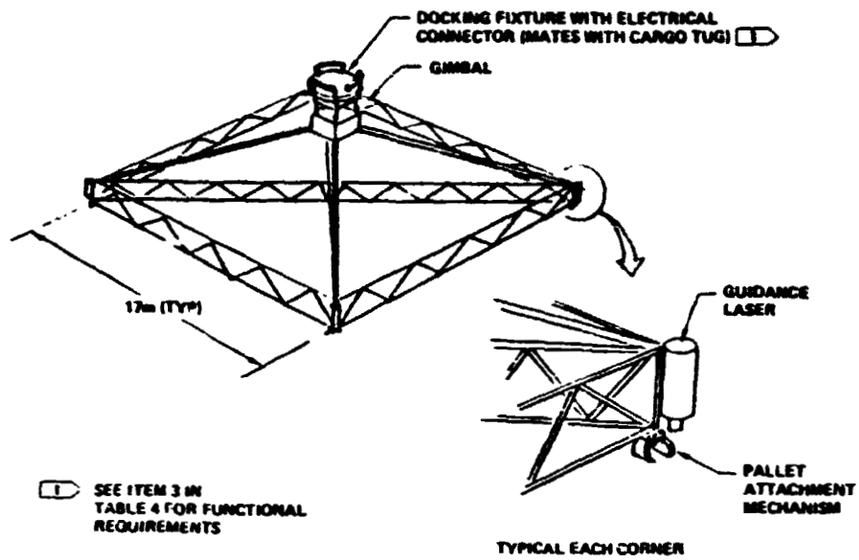

Figure 10-9. Cargo Pallet Handling Fixture

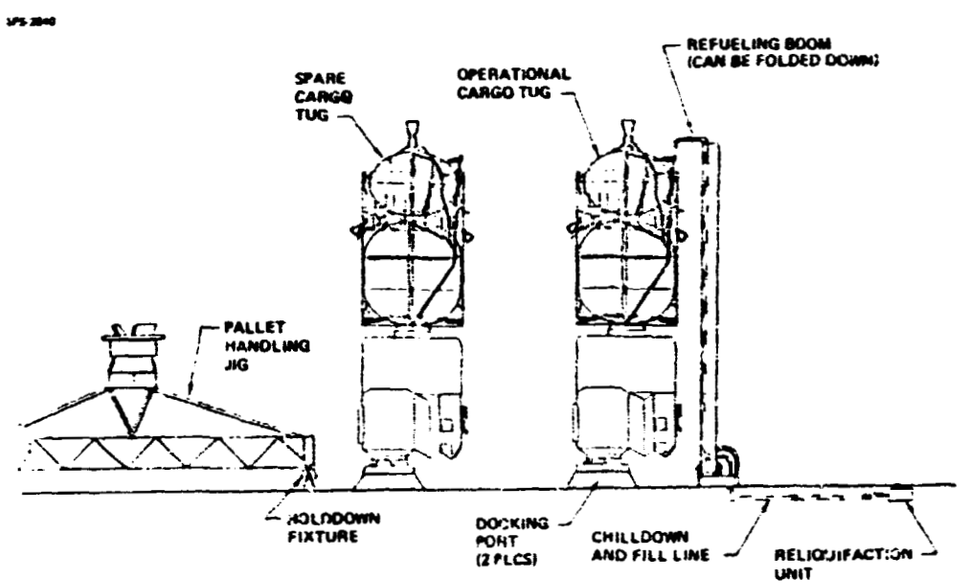

Figure 10-10. Cargo Tug Docking and Propellant Loading Provisions

3.0 LEO-TO-GEO CARGO TRANSPORTATION SUPPORT SYSTEM, AND OPERATIONS

3.1 LEO BASE LEO-TO-GEO CARGO TRANSPORTATION SUPPORT SYSTEMS AND OPERATIONS—There are four operational functions to be accomplished at the LEO Base:

- o EOTV Approach/Departure and Stationkeeping Command and Control Operations
- o EOTV Cargo Pallet Handling Operations
- o EOTV Propellant Handling Operations
- o EOTV Maintenance Operations

The command and control operations will be discussed in Sec. 3.3. The other operations are detailed below:

3.1.1 EOTV Cargo Pallet Handling Operations

Figure 10-11 illustrates the cargo pallet handling operations at the LEO Base. Empty cargo pallets are transported from the EOTV to a cargo transporter at the base. The cargo tug docks the cargo pallet onto the transporter and then backs away. It then moves over and docks to a loaded cargo pallet which is sitting on a cargo transporter. This loaded cargo pallet was previously transported from HLLV docking and cargo handling/storage area and placed into position awaiting a cargo tug. The pallet is removed from the transporter and is then transported to the EOTV.

Figure 10-12 illustrates how the cargo pallets are removed/loaded at the EOTV.

The transfer of empty cargo pallets and loaded cargo pallets can be accomplished well within the 4 days required to refurbish the EOTV thrusters (see Sec. 3.1.3).

3.1.2 EOTV Propellant Handling Operations

The EOTV must be resupplied with propellant while at the LEO Base. A total of 469 MT of argon, 39.4 MT of LO_2 must be resupplied. It was ground ruled that

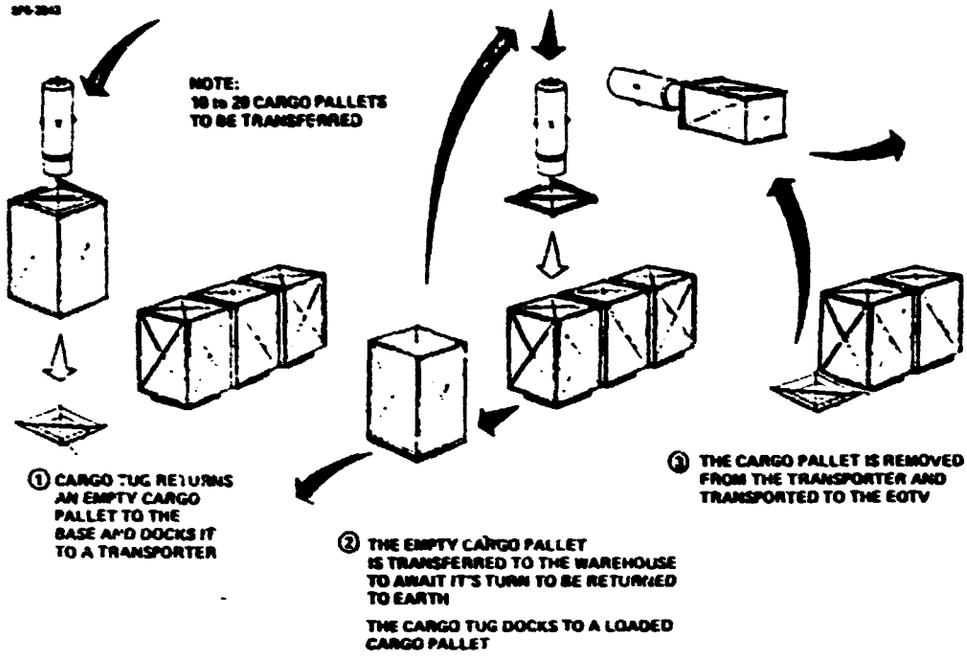

Figure 10-11. Cargo Pallet Handling Operations of the LEO Base

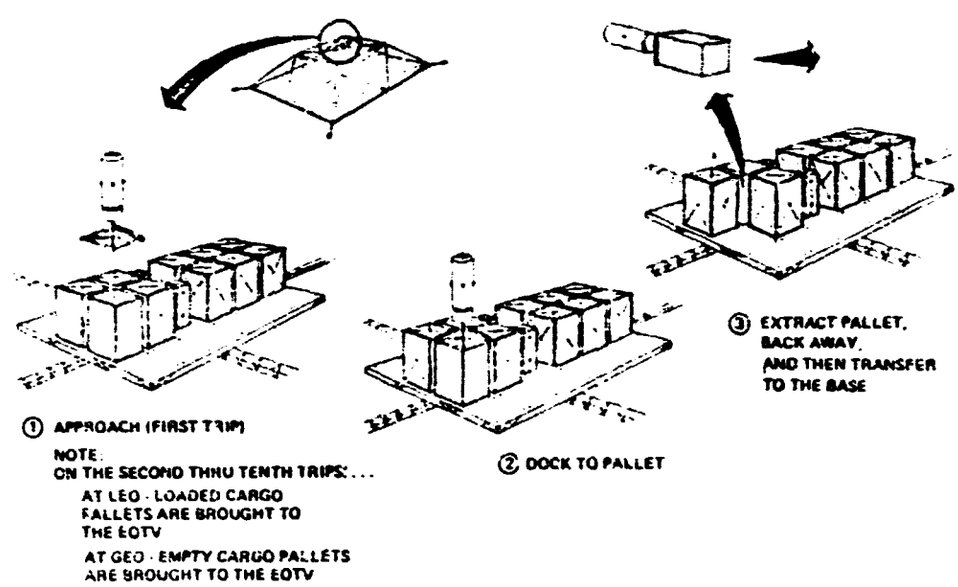

Figure 10-12. Cargo Tug Operations at the EOTV

each of the propellants be packaged in 2 tanks to provide redundancy. Given this constraint and the quantities of propellants to be delivered for each EOTV, the EOTV propellant pallet concept shown in Figure 10-13 was derived.

The concept calls for placing the 3 loaded propellant tanks into a pallet that would be carried within a HLLV cargo pallet. The propellant pallet would be extracted from the cargo pallet and placed onto a cargo transporter. Figure 10-14 illustrates how this pallet is picked up by the cargo tug and flown to the EOTV. Note that an empty propellant pallet is returned from the EOTV first. Figure 10-15 illustrates how the propellant pallet is installed on the EOTV cargo platform. It takes 2 roundtrips to changeout the propellant pallets.

3.1.3 EOTV Maintenance Operations

3.1.3.1 EOTV Components to be Maintained

In the Part I study, it was shown that the primary EOTV maintenance problem will be to replace all of the ion thruster accelerator grids after each roundtrip. There are 269 X 4 = 1036 ion thrusters per EOTV. The accelerator grids will be designed so that each grid can be changed out in 10 minutes.

There will be infrequent cathode failures that would require an entire ion thruster to be changed out.

There will be infrequent failures of the other EOTV components, such as cell string blocking diodes, switchgear, power processors, power buses, etc.

3.1.3.2 Maintenance Access System, Vehicles, Support Equipment, and Operations

In the SPS maintenance analysis (Task 4.2.3) a requirement for a flying cherry-picker was established, see Figure 10-16. This vehicle concept will be applied to the EOTV maintenance.

Figure 10-17 shows that a flying cherrypicker carriage will be located on each of the four annealing machine gantries on each of the EOTV's. The flying cherry-picker will attach itself to an appropriate carriage and the gantry will be moved to

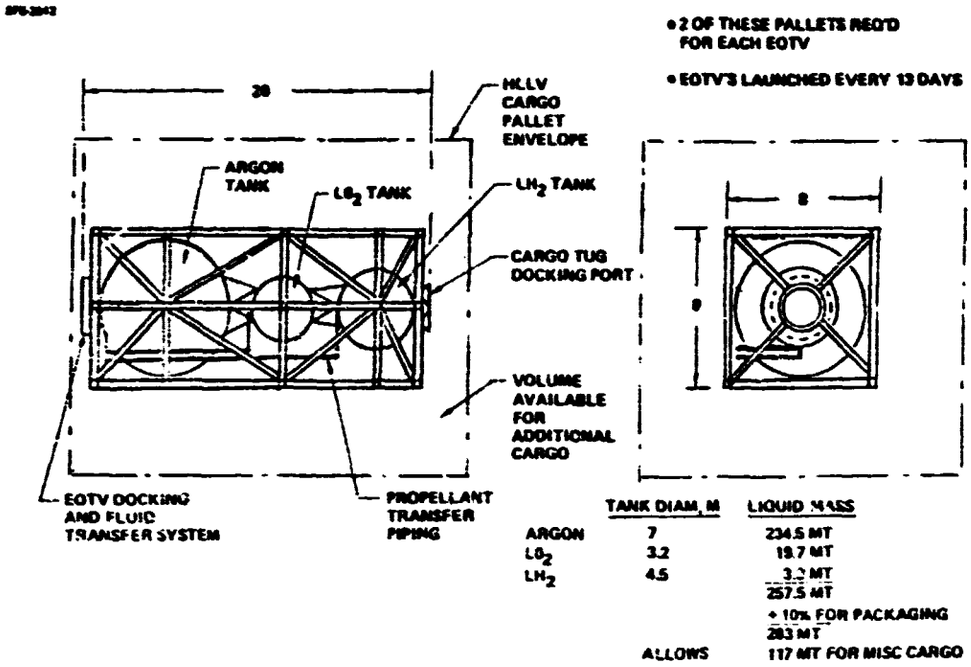

Figure 10-13. EOTV Propellant Pallet Concept

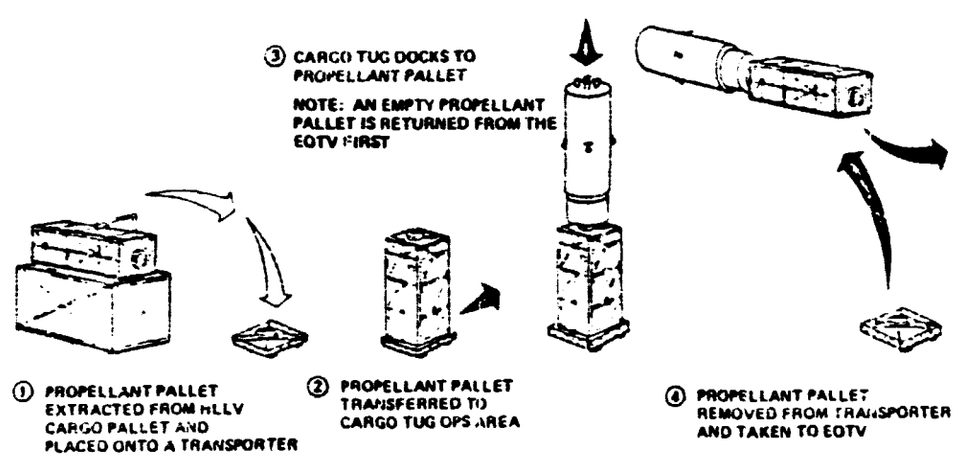

Figure 10-14. EOTV Propellant Pallet Handling Operations at the LEO Base

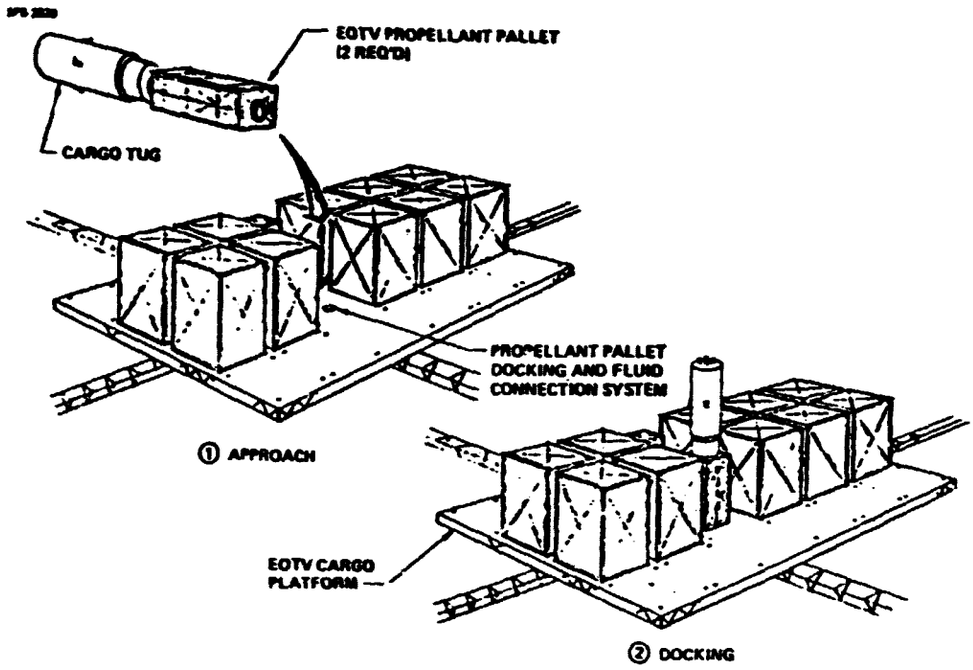

Figure 10-15. EOTV Propellant Pallet Docking Opea Operations at the EOTV

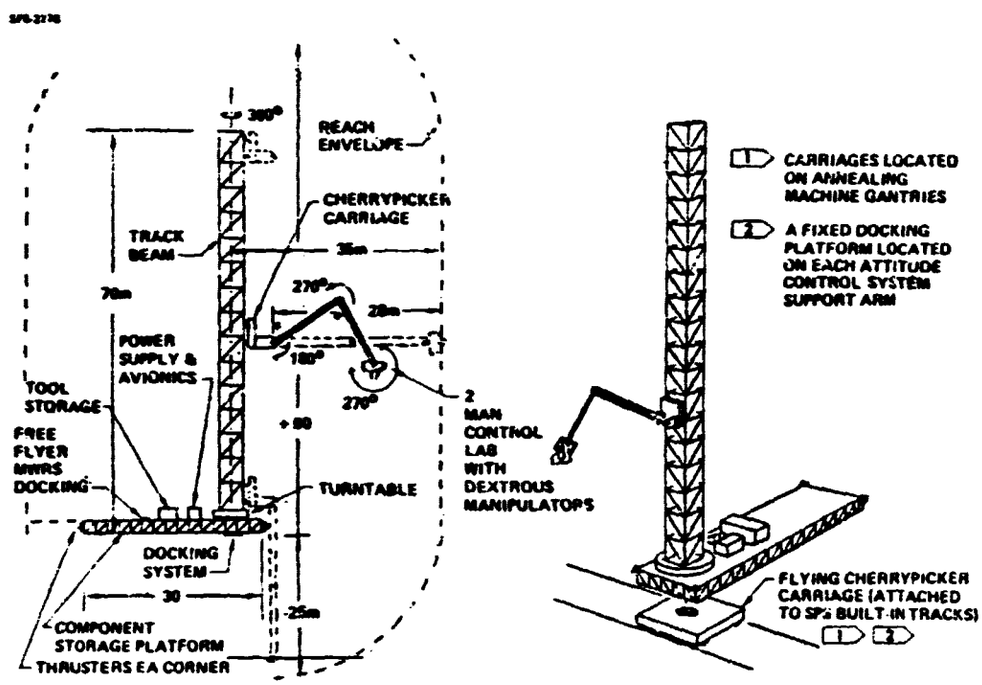

Figure 10-16. Flying Cherrypicker

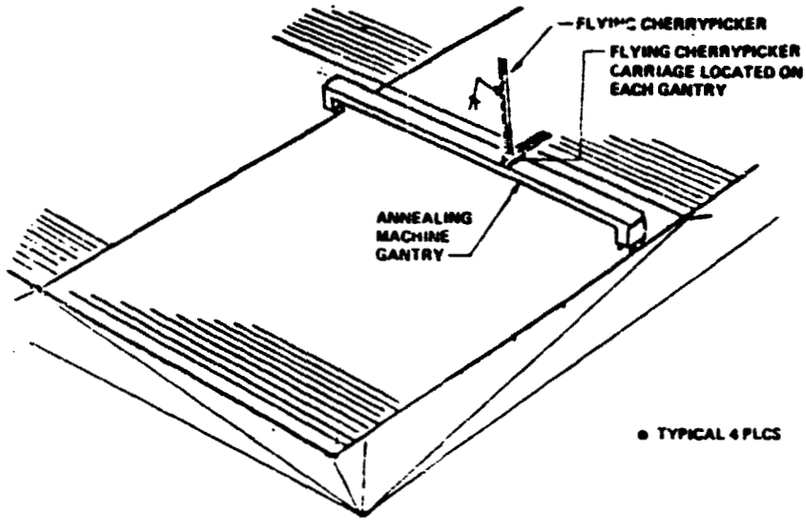

Figure 10-17. Power Collection System Maintenance Access

locations where PPU's, solar array tensioning devices, switch gear, power buses, etc., can be accessed for replacement/repair.

Figure 10-18 shows a flying cherrypicker docking platform located on each of the EOTV attitude control system (ACS) support arms. Figure 10-19 shows a flying cherrypicker docked on the platform. From this position, it can reach the various elements of the ACS. It is also in a position where it can install/retrieve frame a thruster refurbishment machine.

The thruster refurbishment machine is shown in Figure 10-20. Four of these machines are required. This machine incorporates a magazine where replacement accelerator grids are stored and dispensed and where defective grids are stored after removal. The magazine is loaded at the LEO Base Maintenance Module and then is mounted into the refurb machine. The flying cherrypicker transports the machines over to the EOTV and mounts them onto the ACS yokes. An operator in the LEO Base command center would then remotely activate the machines. These thruster refurbishment machines will changeout an accelerator grid in 10 minutes. After approximately 4 days, the flying cherrypicker will retrieve the machines and return them to the LEO Base.

Figure 10-2 showed the EOTV maintenance timeline. Table 10-1 summarized the maintenance support systems and crew size.

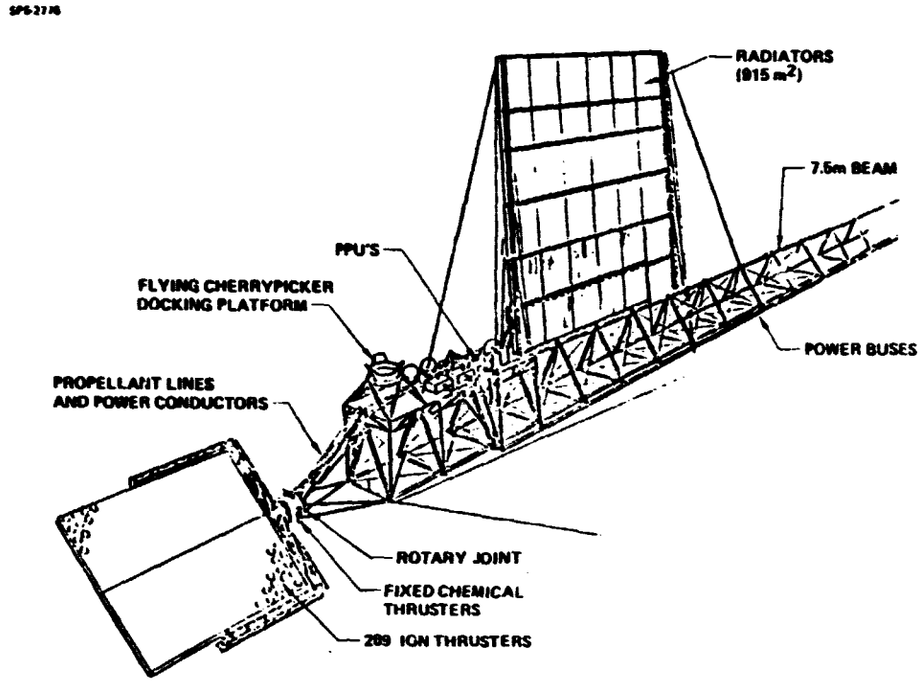

Figure 10-18. EOTV Attitude Control System

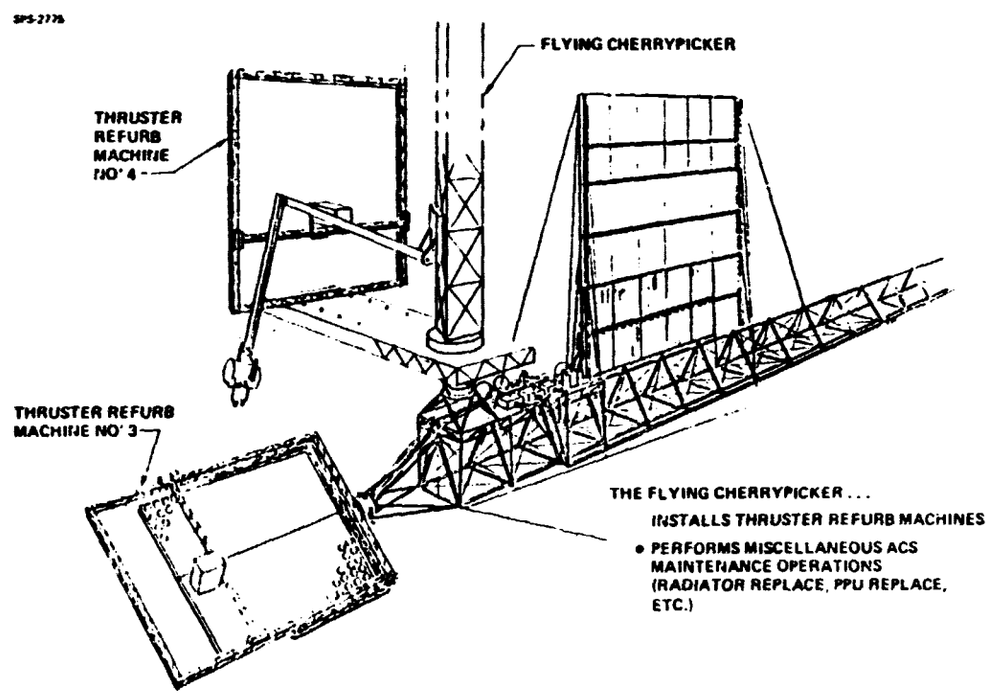

Figure 10-19. EOTV Attitude Control System Maintenance Equipment

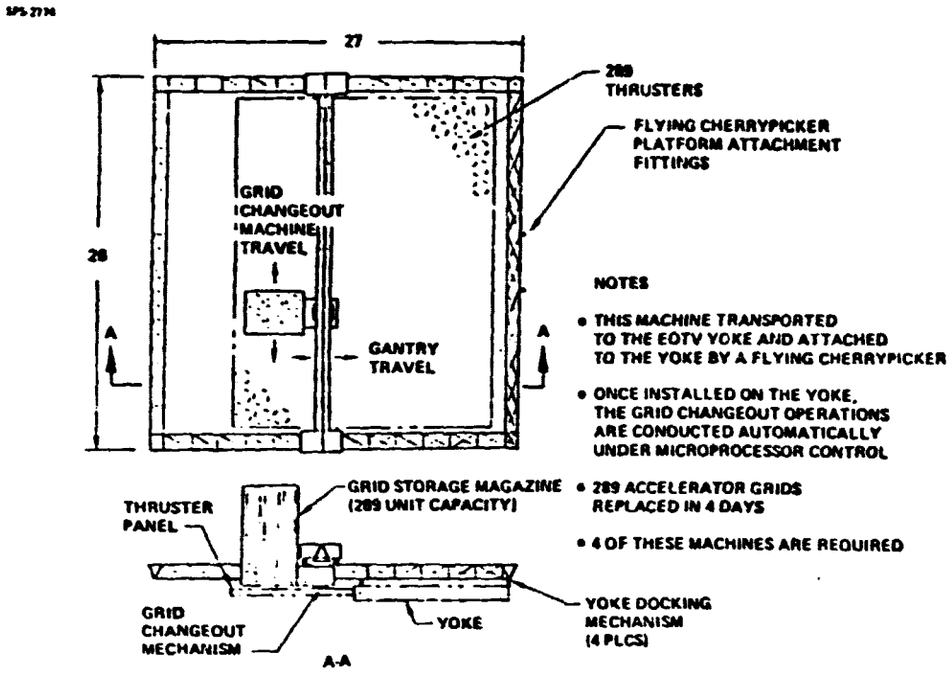

Figure 10-20. EOTV Electric Thruster Refurbishment Machine

3.2 GEO BASE LEO-TO-GEO CARGO TRANSPORTATION

SUPPORT SYSTEMS AND OPERATIONS—There are three operational functions to be accomplished at the GEO Base:

- o EOTV Approach/Departure and Stationkeeping Command and Control Operations
- o EOTV Cargo Pallet Handling Operations
- o EOTV Maintenance Operations

The command and control operations are discussed in Section 3.3. The other operations are described below.

3.2.3 EOTV Cargo Pallet Handling Operations

The cargo pallets are handled at the GEO Base using the same types of systems and operations described for the LEO Base in Section 3.1.1.

3.2.2 EOTV Maintenance Operations

The only planned EOTV maintenance operations to be conducted at GEO is the annealing of the solar arrays.

The method of annealing the EOTV solar array is essentially the same as that employed by the operational satellite. The major operations associated with the EOTV annealing operations are shown in Figure 10-21. In general, the method consists of CO_2 laser systems attached to a gantry that can move across each bay. Each gantry system anneals a 15 m strip the entire width of the bay. For EOTV application, 2.5 hours is required per strip with continuous power requirement of 8.7 MW. The reference system will use four annealing gantries, thus resulting in an annealing time of approximately four days. When using four gantries, two are placed in each of two bays so that power can be drawn from the other two bays to operate the annealing systems. When a given bay has been completely annealed, the gantries will move to a bay that has not been annealed and repeat the annealing operation.

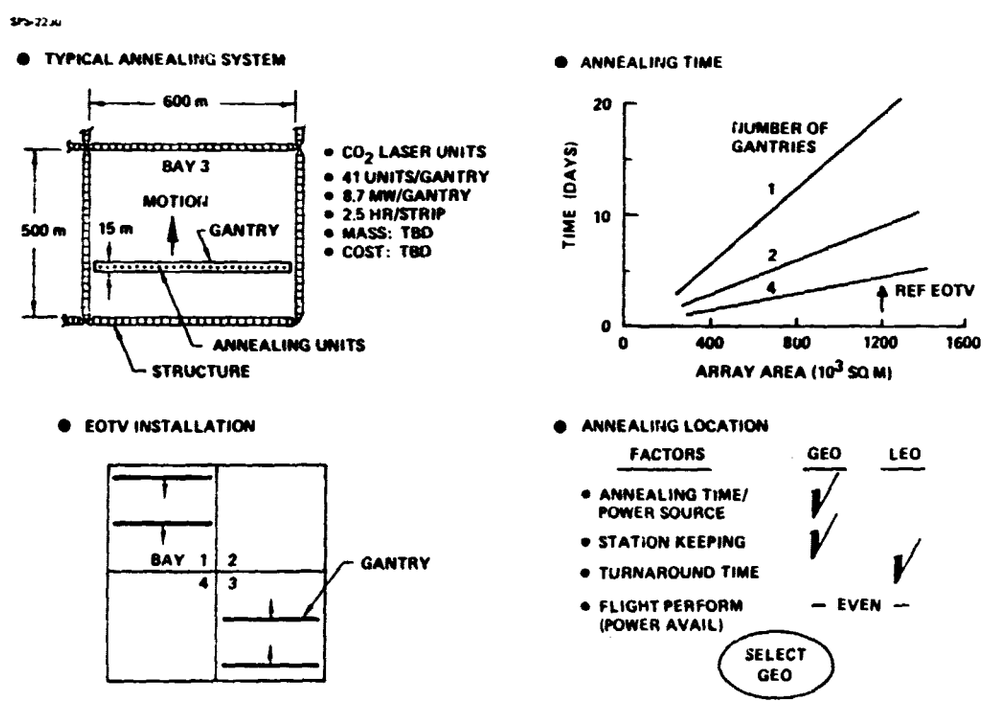

Figure 10-21. EOTV Annealing Operations

The annealing operations will be remotely controlled/monitored from the GEO Base Command and Control Center. Annealing can be performed at either LEO or GEO, however, such factors as continuous sunlight to generate power and minimum orbit keeping propellant suggests annealing at GEO will be slightly better than if the operation was performed at LEO.

3.3 LEO-TO-GEO-TRANSPORTATION COMMAND AND CONTROL SYSTEMS AND OPERATIONS

The command and control tasks identified for LEO-to-GEO cargo transportation operations are listed in Table 10-5.

A C&C group is responsible for integrating the cargo transportation operations into the total program operations. This will involve keeping abreast of the cargo vehicle's status, scheduling of vehicle flights and vehicle maintenance, coordinating launch window assignments with the Space Traffic Control C&C, and so on.

The Space Traffic Control C&C will specify EOTV launch windows and will provide midcourse guidance and tracking as well as vehicle status monitoring during the transit.

The LEO Base Command Center will have systems and personnel assigned to provide the following LEO-to-GEO cargo transportation command and control functions:

1) Coordination of EOTV Operations with Space Traffic Control—As an incoming EOTV is nearing the LEO Base, the Space Traffic Control Center (STCC) will hand-off control of the vehicle to an EOTV controller located at the LEO Base. this controller will control the final approach maneuvering and will place the EOTV into a stationkeeping position approximately 1 km away from the base. When the vehicle is ready for launching to GEO, the EOTV controller will establish contact with the STCC and will receive a launch window assignment. As the vehicle departs, the EOTV controller will hand off control of the vehicle to the STCC.

TABLE 10-5. COMMAND AND CONTROL TASKS

LOCATION/OPERATION: LEO-TO-GEO CARGO TRANSPORTATION

FUNCTION/TASKS	COMMAND AND CONTROL TASKS	INTERFACE INTERNAL	INTERFACE EXTERNAL
LEO-to-GEO Cargo Transportation Planning	. Receive SPS program constraints, master schedule		x
	. Receive EOTV and cargo tug maintenance status reports		x
	. Receive EOTV status reports		x
	. Receive EOTV and cargo tug maintenance plans		x
	. Coordinate EOTV launch window assignments with Space Traffic Control		x
	. Prepare EOTV manifest	x	
	. Coordinate EOTV propellant delivery requirements		x
	. Transmit EOTV cargo manifest		x
LEO Base EOTV Operations	. Receive cargo manifest		x
	. Monitor cargo tug status . availability . status . consumables . crew	x	
	. Monitor/control EOTV stationkeeping operations	x	

TABLE 10-5. COMMAND AND CONTROL TASKS(continued)

LOCATION/OPERATION: LEO-TO-GEO CARGO TRANSPORTATION

FUNCTION/TASKS	COMMAND AND CONTROL TASKS	INTERFACE INTERNAL	INTERFACE EXTERNAL
	. Monitor/control cargo tug flight operations	x	
	. Coordinate cargo tug and EOTV maneuvering with LEO Base Traffic Control	x	
	. Coordinate intrabase cargo transportation requirements	x	
	. Monitor/control EOTV refueling operations	x	
	. Coordinate EOTV maintenance operations (ref. Space Vehicle In-Space Maintenance Operations)	x	
	. Transmit EOTV and cargo tug status to ground		x
	. Coordinate crew operations . training . requirements . scheduling	x	
GEO Base EOTV Operations	(same as LEO Base EOTV Operations, except delete refueling operations)		

2) EOTV Stationkeeping Control—the EOTV Controller at the LEO Base will monitor the status and orbital location of the EOTV. He is responsible for keeping the vehicle in its relative location during daily orbit trim maneuvers that the LEO Base must perform daily. The controller also maintains contact with the Cargo Transportation C&C Center advising them of the vehicle's operational status, maintenance status, etc.

3) Local Trafic Control—A Traffic Controller located at the LEO Base will be responsible for coordinating the movements of the cargo tug and flying cherrypicker with the EOTV, HLLV, FLV, and POTV traffic.

4) EOTV Maintenance Command and Control—A thruster refurbishment machine controller will be stationed in the LEO Base Comman Center. He will remotely activate and monitor the four refurb machines.

The GEO Base Command Center will have system and personnel assigned to provide the following LEO-to-GEO cargo transportation command and control functions:

1) Coordination of EOTV Operations with Space Traffic Control—Same as described above for the LEO Base.

2) EOTV Stationkeeping Control—Same as described above for the LEO Base.

3) Local Traffic Control—Same as described above for the LEO Base.

4) EOTV Maintenance Control—An annealing machine controller will be located in the GEO Base Command Center. He will remotely activate and monitor the four solar array annealing machines.

SECTION 11
SPACE VEHICLE IN-SPACE MAINTENANCE

		Page
1.0	Introduction	11-1
2.0	Space Vehicle In-Space Maintenance Plans	11-5
2.1	Heavy Lift Launch Vehicle (HLLV) In-Space Maintenance Plan	11-5
2.2	Personnel Launch Vehicle (PLV) In-Space Maintenance Plan	11-6
2.3	Electric Orbital Transfer Vehicles (EOTV) In-Space Maintenance Plan	11-6
2.4	Personnel Orbital Transfer Vehicle (POTV) In-Space Maintenance Plan	11-13
2.5	Cargo Tug In-Space Maintenance Plan	11-31
2.6	SPS Maintenance Support Transportation Vehicle In-Space Maintenance Plan	11-32
2.7	Space Vehicle In-Space Maintenance Command and Control	11-32
3.0	Integrated Space Vehicle In-Space Maintenance Plan	11-36

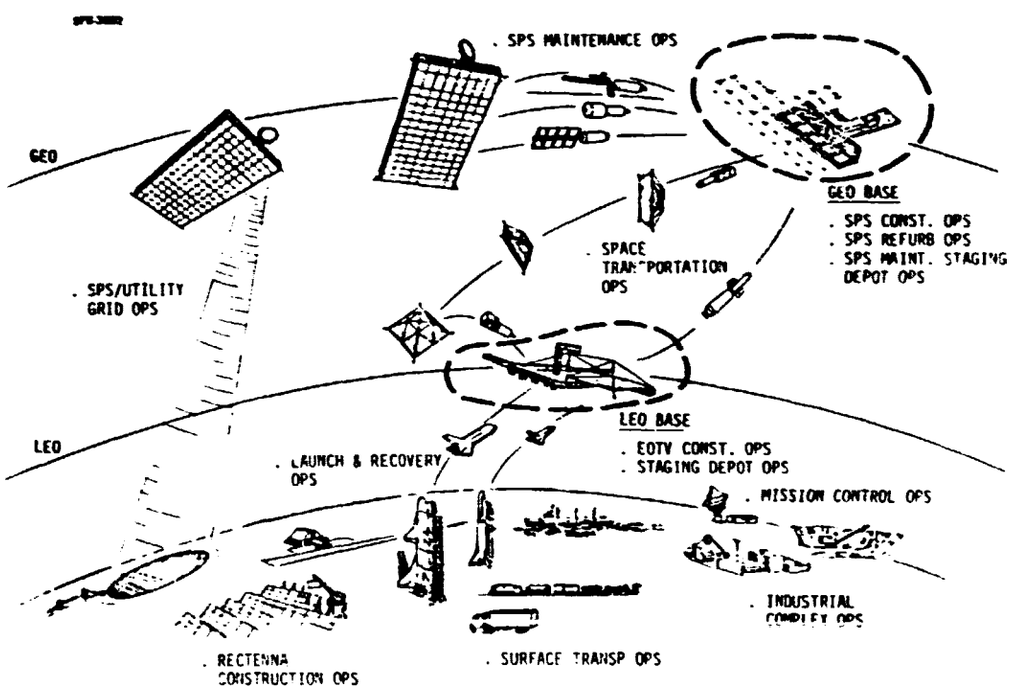

SECTION 11
SPACE VEHICLE IN-SPACE MAINTENANCE

1.0 INTRODUCTION

The in-space maintenance operations and systems associated with the HLLV, PLV, EOTV, POTV, Cargo Tug, and the vehicles used by the traveling SPS maintenance crews are discussed in this report. The in-space maintenance plans for each of these vehicles is given in Section 2. These plans are then integrated into a composite in-space maintenance plan in Section 3.

Before detailing the maintenance plans for the vehicles, the general maintenance philosophy that was applied is described.[1]

Maintenance Concepts

The three possible maintenance concepts are:

a. Fixed-schedule Maintenance

This concept utilizes set limits, in terms of hours, cycles, flights, calendar time, or other measures of elapsed time, at which a component, subsystem, or whatever, is subjected to maintenance. repair, or replacement. The schedules are initially established through analysis of development data and reliability estimates, and are updated subsequently through operational experience. This approach is best suited to systems whose failures are dominated by predictable wearout.

b. On-condition Maintenance

This concept relies on the determination of the condition of a component, subsystem, or whatever, at specified intervals via measurement, test, or other means, without removal or disassembly. Removal or repair is initiated by detection of a fault or failure, or trend data indicating a significant degradation and incipient failure. This approach is suited to systems whose failures are non-catastrophic, and for those failures that are difficult to predict far enough in advance to employ scheduled maintenance.

---

1. Reference: Baseline Space Tug Ground Operations: Verification, Analysis, and Processing, Marshall Space Flight Center, Report No. 68M00039-4, July 15, 1974.

c. Condition Monitored Maintenance

Maintenance requirements under this concept are determined by the monitoring of operational flight instrumentation, analysis of in-flight data for trends, and detection of statistically significant recurring problems on a fleet-wide basis. More stringent control can be established to temper this method by requiring pre-flight integrated systems testing. If the condition monitoring systems are adequately reliable predictors, this approach can be applied to any system.

The last two maintenance concepts are favored for most systems. They are, for example, used by commercial airlines. Implied in these two is the requirement that condition assessment provides sufficient information concerning the vehicle's condition to ensure a confidence as to its reliability for the next flight.

Airline maintenance experience on complex vehicles and aerospace reliability analysis programs over the past decade have established that complex items exhibit random failure characteristics with constant or decreasing failure rates, with respect to time, commencing with use or overhaul. In contrast, fixed-schedule maintenance assumes an average component operational limit and failure rate based on a nominal reliability. The fixed-schedule maintenance concept is not primarily oriented to detecting incipient failure or preventing failure, and can occasionally cause failure. It is not cost effective in terms of applying maintenance support to actual maintenance requirements, except in the case of predictable wearout modes of failure such as exhibited by ion thruster accelerator grids.

In comparison, on-condition and condition monitored maintenance concepts are oriented towards detecting existing or incipent failures and maintenance demanding conditions. Furthermore, condition monitored maintenance assumes the least amount of test and checkout requirements, on the basis that actual operation provides the best functional check or measurement of performance. This is contingent on the existence of necessary instrumentation or other means of obtaining maintenance significant information.

The SPS space vehicles are similar in overall complexity to current commercial airplanes. In addition, the SPS program goal is to have vehicles capable of an extended life (50 or more missions), with refurbishment, in comparison to previous space flight vehicles. The vehicle monitoring and control instrumentation is anticipated to be sufficient to support effective analysis of in-flight data for maintenance requirements. Coupled with the objective of minimum overall program cost, on-condition and condition monitored maintenance concepts become the most feasible.

Levels of Maintenance

In conjunction with the above maintenance concepts, levels of maintenance action are identified. They are:

a. Level I Maintenance

This covers all maintenance activities performed directly on installed hardware. This included on-vehicle fault detection, isolation, correction and prevention through such functions as inspection, checkout, calibration, adjustment, in-place repair, removal and replacement of line replaceable units (LRU), servicing, etc.

b. Level II Maintenance

This involves activities performed in direct support of Level I maintenance, consisting of repair and/or dispositioning of hardware removed during Level I. In addition, further maintenance actions involving more extensive in-place repair or replacement, up to the extent of complete overhaul, could be performed in the maintenance support shops located at the orbital bases. The extent of maintenance capability at the orbital bases will be established based on economic tradeoffs as to location and extent.

c. Level III Maintenance

This level consists of those activities which will be performed on vehicles that have been returned to Earth where the required skills, equipment, and/or facilities are available. These activities, performed in support of Level I and II maintenance, are usually of a unique, infrequent, or complex nature, such as major overhaul.

These three levels of maintenance cover the span of maintenance activities anticipated during the SPS program's operational phase.

Types of Maintenance

Scheduled maintenance consists of activities which are performed at specific, periodic intervals, the objective of which is to maintain or restore the vehicle to an acceptable level of reliability or performance for flight. These activities can take the form of inspection, flight data analysis, checkout, calibration, adjustment, servicing, in-place repair, or LRU replacement. Unscheduled maintenance is primarily corrective action resulting from fault detection, failure, or trend detection during condition monitoring or scheduled maintenance tasks. It is comprised of essentially the same activities as scheduled maintenance, with the emphasis on restoring degraded equipment to an acceptable level of reliability.

For the various space vehicles, it is assumed that:

a. The primary method of accomplishing unscheduled maintenance will be through replacement of faulty LRU's.

b. Unscheduled maintenance will be performed in parallel with scheduled maintenance whenever practicable.

c. Maintenance will be performed concurrently on all systems to the maximum extent practicable.

Maintenance Planning

As a consequence of the above maintenance concepts preferences and conditions, a maintenance planning activity must be established and functioning during the operational phase. Since each vehicle will unlikely have different maintenance requirements from other vehicles and, for that matter, from itself for any particular maintenance cycle, a program of condition assessment and data analysis must be conducted. Results from inspection, checkout, flight data analysis, and fleet data analysis must be compared with facility, manpower, and space availability, and vehicle mission schedules to establish optimum, cost effective maintenance schedules for each vehicle.

2.0 SPACE VEHICLE IN-SPACE MAINTENANCE PLANS

2.1 (HLLV) IN-SPACE MAINTENANCE PLAN

The reference HLLV is shown in Figure 11-1. The HLLV Orbiter is the only portion of this vehicle to be considered here.

No in-space maintenance of the HLLV orbiter is planned. It is anticipated that the vehicle will be designed with enough redundant systems so that it will be capable of returning safely to Earth if one or more system failures are encountered during the boost to the LEO Base. Therefore, no HLLV orbiter-dedicated LEO Base facilities, maintenance support equipment, or maintenance personnel are required. It is assumed that maintenance capabilities established at the LEO Base for other vehicles could be adapted to any emergency situations that might arise for the HLLV.

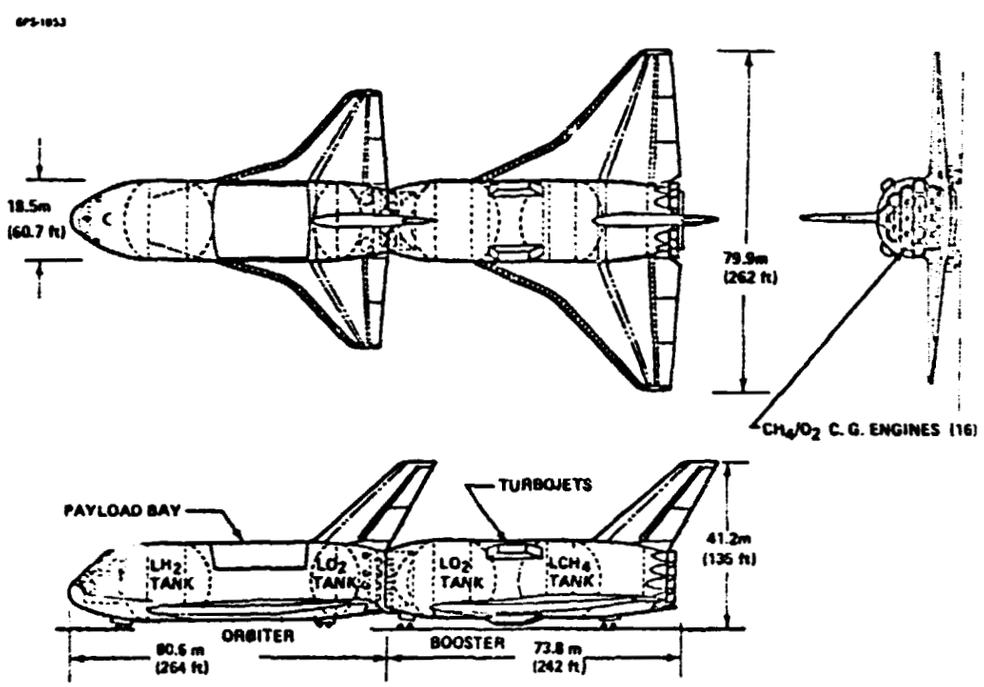

Figure 11-1. Heavy Lift Launch Vehicle

2.2 PERSONNEL LAUNCH VEHICLE (PLV) IN-SPACE MAINTENANCE PLAN

The reference PLV is shown in Figure 11-2. the shuttle orbiter is the only portion of this vehicle that is to be considered here.

As for the HLLV orbiter, no in-space maintenance of the PLV orbiter is planned.

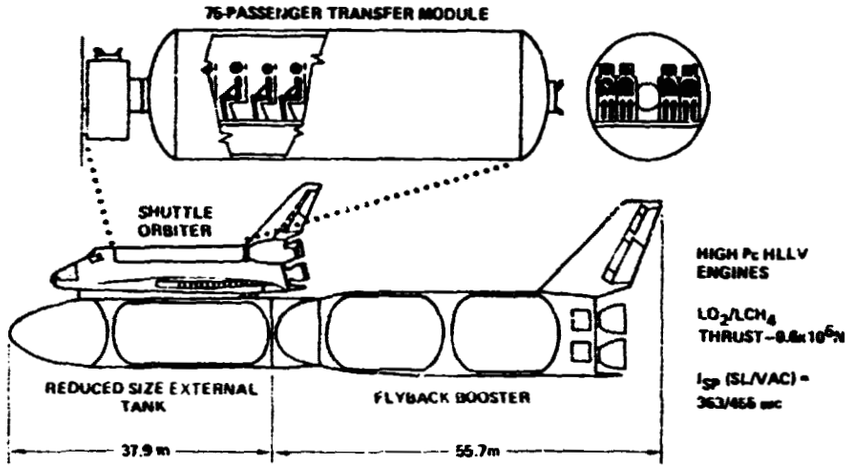

Figure 11-2. Personnel Launch Vehicle

2.3 ELECTRIC ORBIT TRANSFER VEHICLE (EOTV) IN-SPACE MAINTENANCE PLAN

The reference EOTV is shown in Figure 11-3.

EOTV Components to be Maintained

In the Phase I study, it was shown that the primary EOTV hardware replacement requirement will be to replace all of the ion thruster accelerator grids after each roundtrip (a routine scheduled maintenance operation). The failures mode here is predictable wearout. Grids will have a design life of one trip plus adequate margins. There are 1036 ion thrusters per EOTV. The accelerator grids will be designed so that each grid can be removed and replaced in 10 minutes.

There will be infrequent cathode failures that would require an entire ion thruster to be removed and replaced. This would be an on-condition maintenance task.

REPRODUCIBILITY OF THE
ORIGINAL PAGE IS POOR

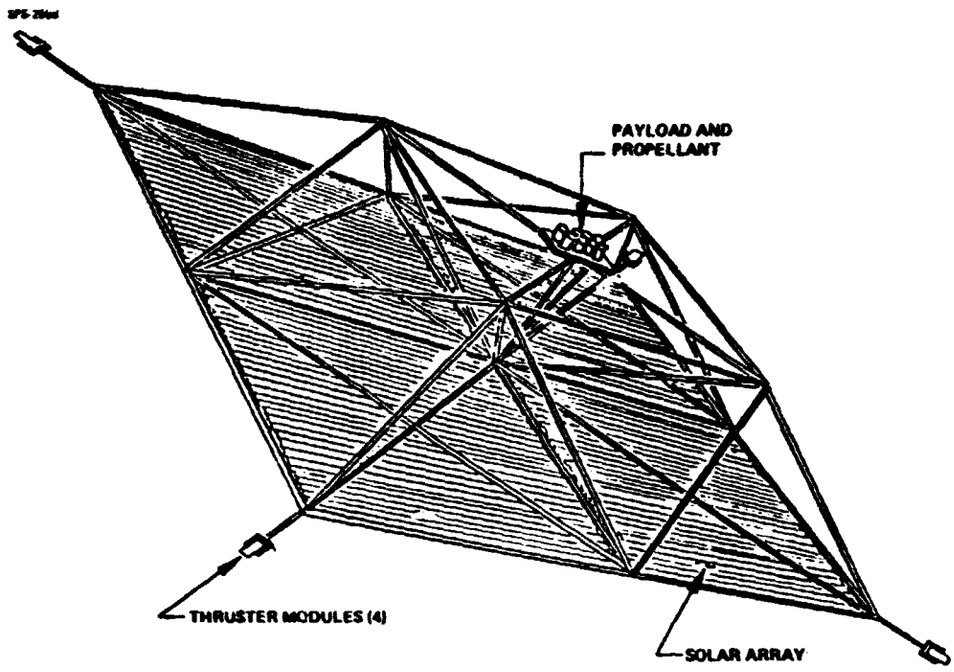

Figure 11-3. EOTV Configuration Concept

Maintenance Access System, Vehicles, Support Equipment, and Operations

In the SPS maintenance analysis a requirement for a flying cherry-picker was established. The vehicle concept is shown in Figure 11-4. This vehicle concept will be applied to the EOTV maintenance.

Figure 11-5 shows that a flying cherrypicker carriage will be located on each of the four annealing machine gantries on each of the EOTV's. The flying cherry-picker will attach itself to an appropriate carriage and the gantry will be moved to locations where PPU's, solar array tensioning devices, switch gear, power buses, etc., can be accessed for replacement/repair.

Figure 11-6 shows a flying cherrypicker docking platform located on each of the EOTV attitude control system (ACS) support arms. Figure 11-7 shows a flying cherrypicker docked on the platform. From this position, it can reach the various elements of the ACS. It is also in a position where it can install/retrieve a thruster refurbishment machine.

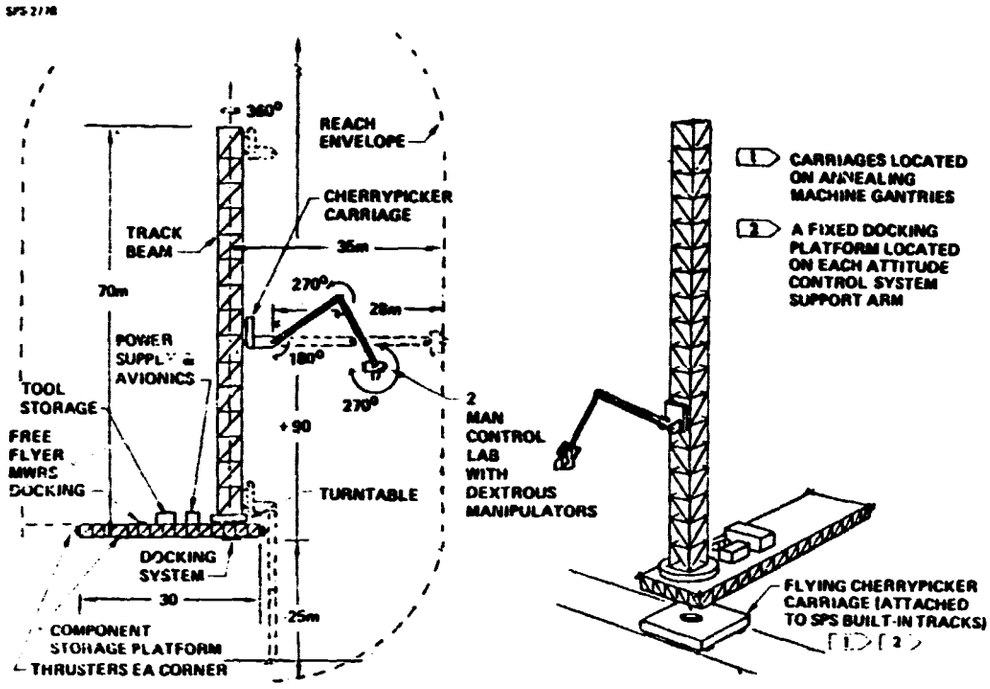

Figure 11-4. Flying Cherrypicker

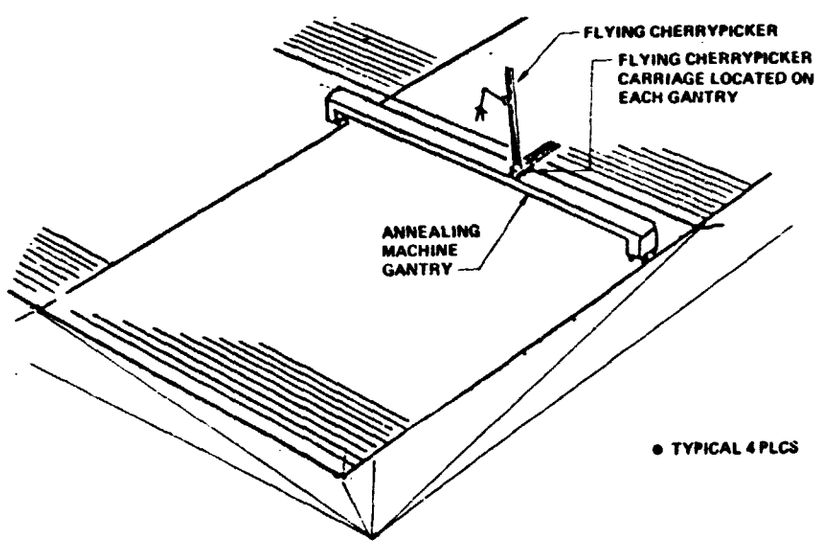

Figure 11-5. Power Collection System Maintenance Access

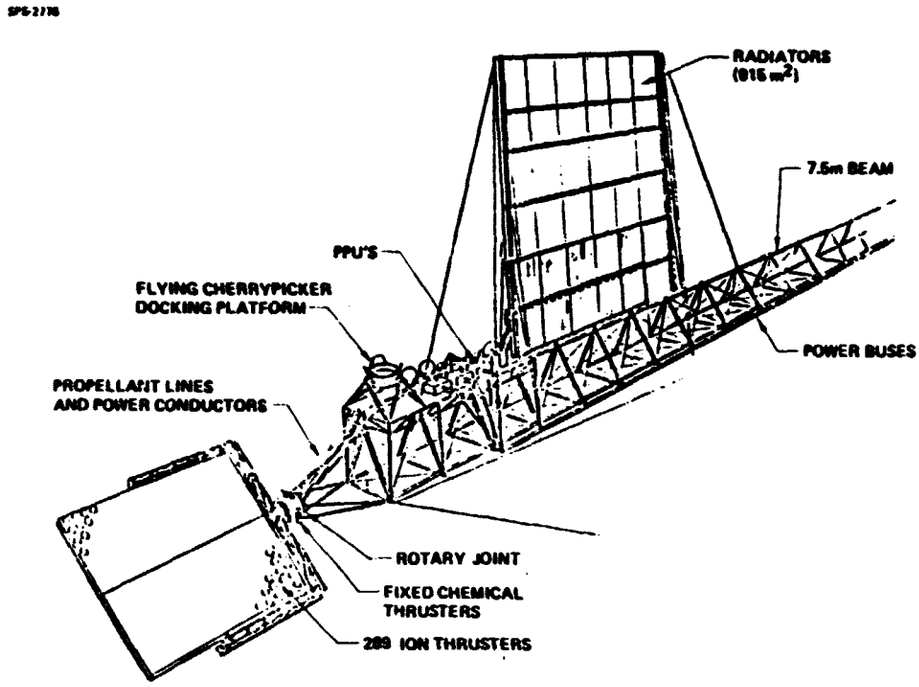

Figure 11-6. EOTV Attitude Control System

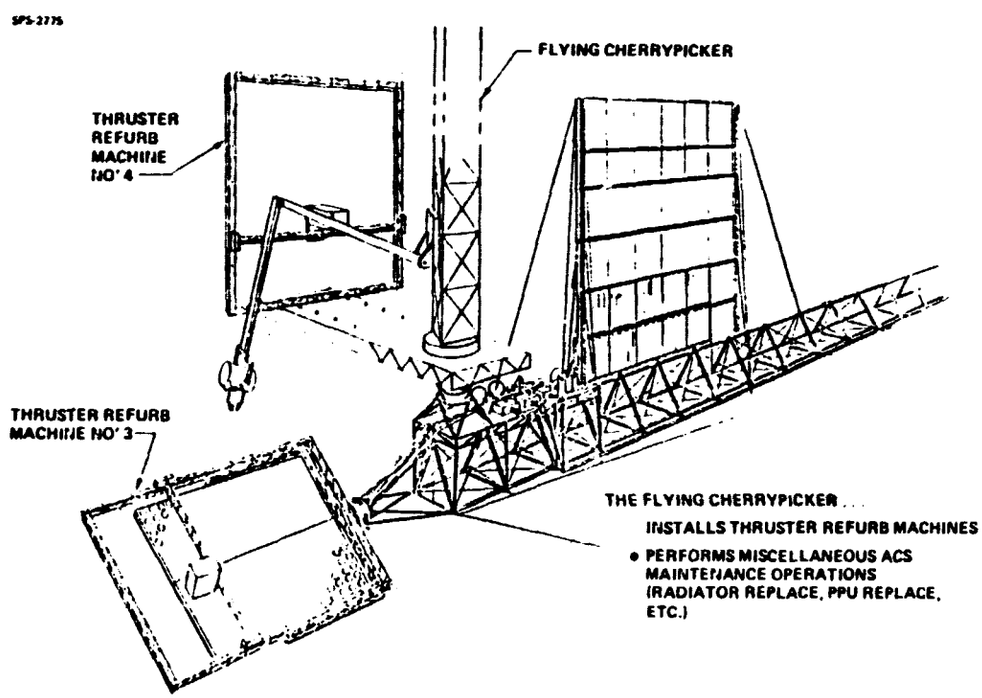

Figure 11-7. EOTV Attitude Control System Maintenance Equipment

The thruster refurbishment machine is shown in Figure 11-8. Four of these machines are required. This machine incorporates a magazine where replacement accelerator grids are stored and dispensed and where defective grids are stored after removal. The magazine is loaded at the LEO Base Maintenance Module and then is mounted into the refurb machine. The flying cherrypicker transports the machines over to the EOTV and mounts them onto the ACS yokes. An operator in the LEO Base command center would then remotely activate the machines. These thruster refurbishment machines will changeout an accelerator grid in 10 minutes. All grids are replaced after every EOTV round trip. After approximately 4 days, the flying cherrypicker will retrieve the machines and return them to the LEO Base.

Figure 11-9 shows the EOTV maintenance timeline at the LEO Base. Table 11-1 summarizes the maintenance support systems and crew size at the LEO Base.

The only planned EOTV maintenance operations to be conducted at GEO is the annealing of the solar arrays. This is a predictable degradation failure mode. Analyses indicate that restoration after each trip is the best approach.

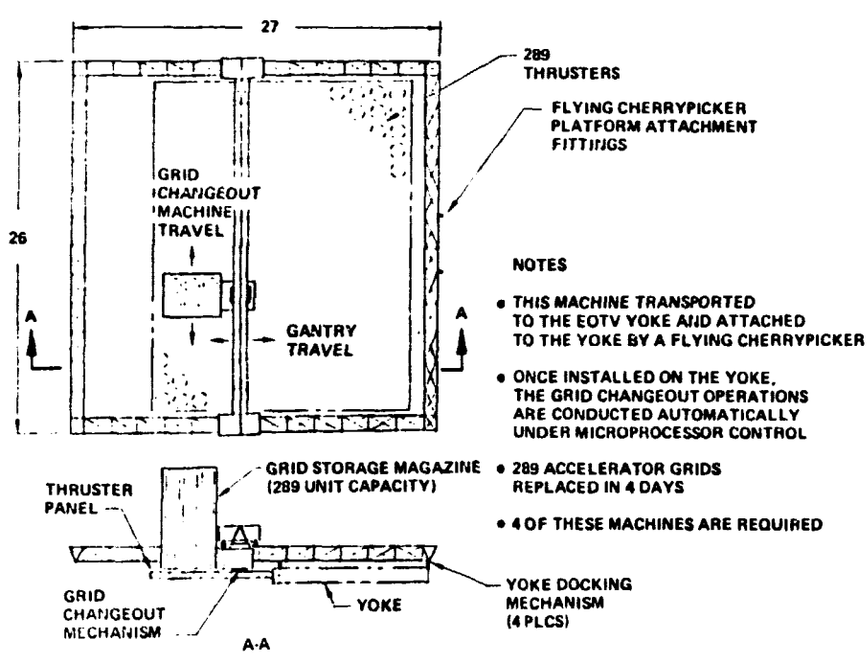

Figure 11-8. EOTV Electric Thruster Refurbishment Machine

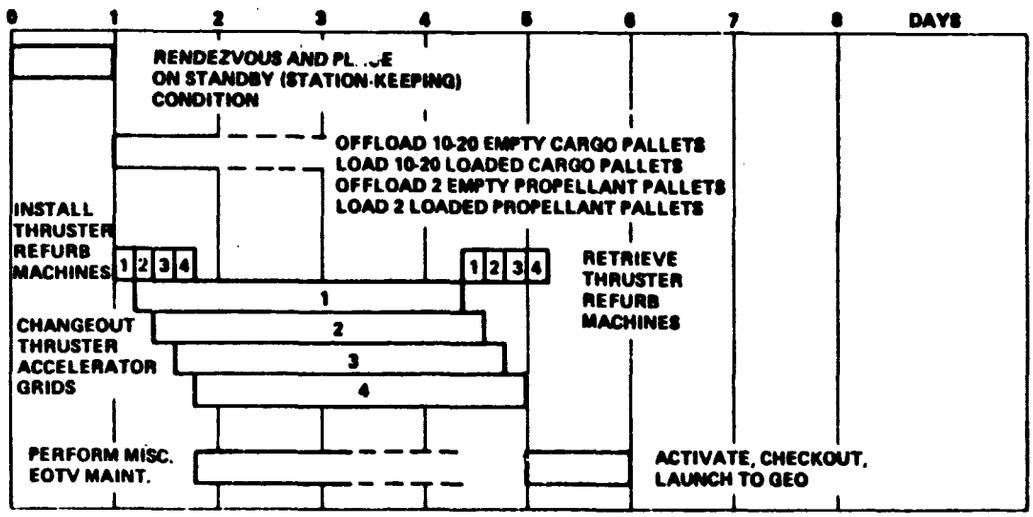

Figure 11-9. EOTV Operation at LEO

TABLE 11-1

EOTV MAINTENANCE SUPPORT SYSTEM AND CREW SIZE AT THE LEO BASE

COMPONENTS TO BE REFURBISHED

- o ION THRUSTER ACCELERATOR GRIDS
  - o 1036 PER EOTV (259 Per Thruster Ass'y)
  - o APPROX. 80 UNITS PER DAY TO BE REFURBED
- o MISC. EOTV COMPONENTS
  - o PPU's, PUMPS, SWITCH GEAR, ETC.
  - o VERY FEW OF THESE

o USE LEO BASE MAINTENANCE MODULE

o EOTV MAINTENANCE SUPPORT EQUIPMENT

- o 2 FLYING CHERRYPICKERS (1 Operational & 1 Spare)
- o 4 THRUSTER REFURB MACHINES

o EOTV MAINTENANCE CREW

o FLYING CHERRYPICKER OPERATOR	2 per shift = 4
o THRUSTER REFURB MACHINE OPERATOR	1 per shift = 2
o COMPONENT REFURB	4 per shift = 8
o EOTV MAINT. SUPV.	1 per shift = 2
	=16 Total

The method of annealing the EOTV solar array is essentially the same as that employed by the operational satellite. The major operations associated with the EOTV annealing operations are shown in Figure 11-10. In general, the method consists of CO_2 laser systems attached to a gantry that can move across each bay. Each gantry system anneals a 15 m strip the entire width of the bay. For EOTV application, 2.5 hours is required per strip with a continuous power requirement of 8.7 MW. This power will be drawn from EOTV bays not being annealed. The reference system will use four annealing gantries, thus resulting in an annealing time of approximately four days. When using four gantries, two are placed in each of two bays so that power can be drawn from the other two bays to operate the annealing systems. When a given bay has been completely annealed, the gantries will move to a bay that has not been annealed and repeat the annealing operation. Figure 11-11 shows the EOTV maintenance timeline at the GEO Base.

The annealing operations will be remotely controlled/monitored from the GEO Base Command and Control Center. Annealing can be performed at either LEO or GEO; however, such factors as continuous sunlight to generate power and minimum orbit keeping propellant suggest annealing at GEO will be slightly better than if the operation was performed at LEO.

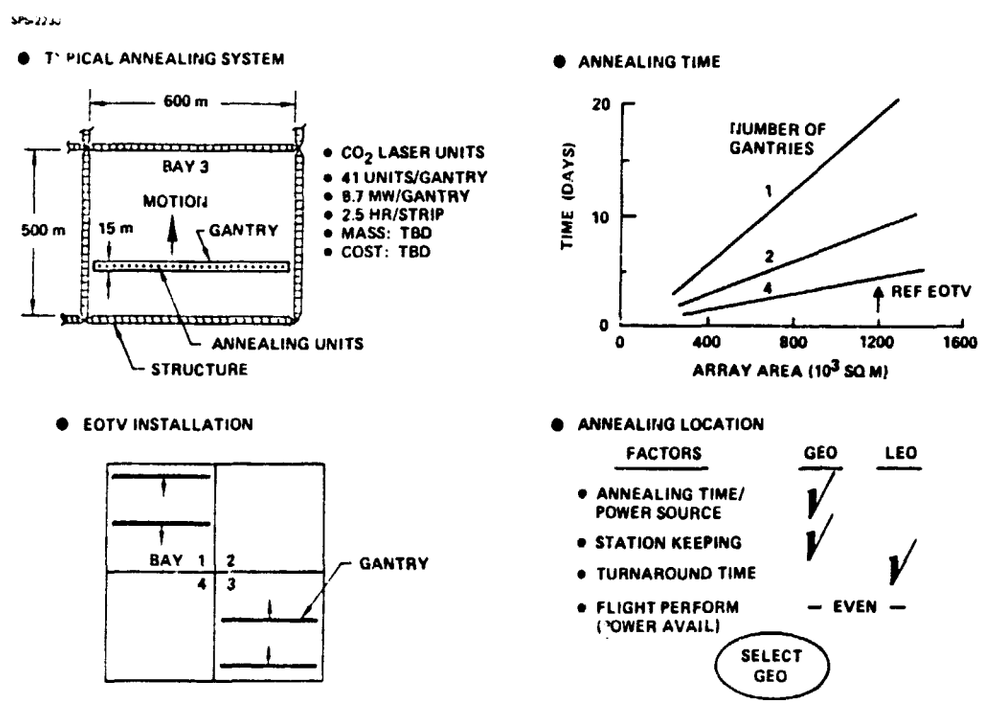

Figure 11-10. EOTV Annealing Operations

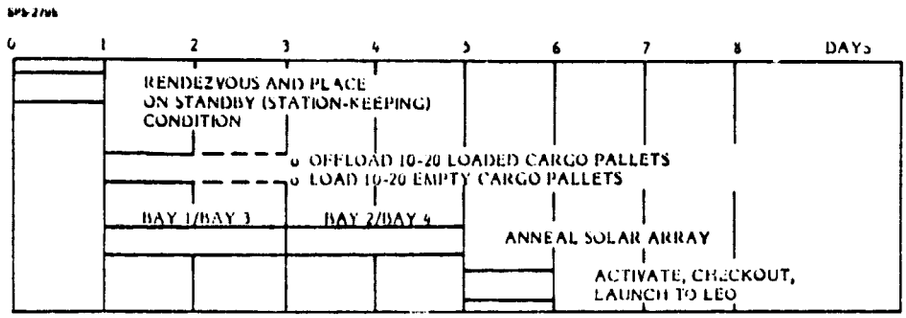

Figure 11-11. EOTV Operations at GEO

2.4 PERSONNEL ORBIT TRANSFER VEHICLE (POTV) IN-SPACE MAINTENANCE PLAN

The reference POTV is shown in Figure 11-12. All modules of this vehicle will be maintained at the LEO Base. Figure 11-13 shows the maintenance functional flow plan.[1]

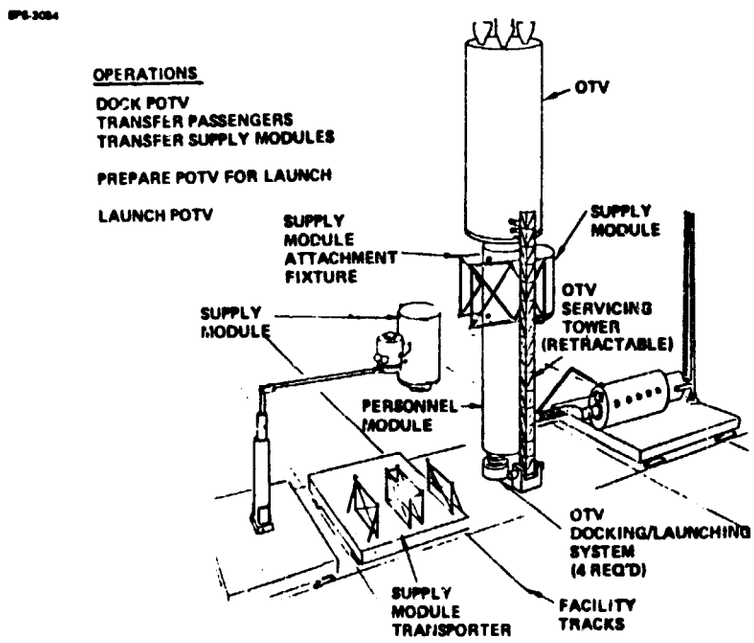

11-12. Personnel Orbital Transfer Vehicle (POTV)

1. This maintenance functional flow and maintenance data that follows was adapted from the Reference cited in Section 1.0.

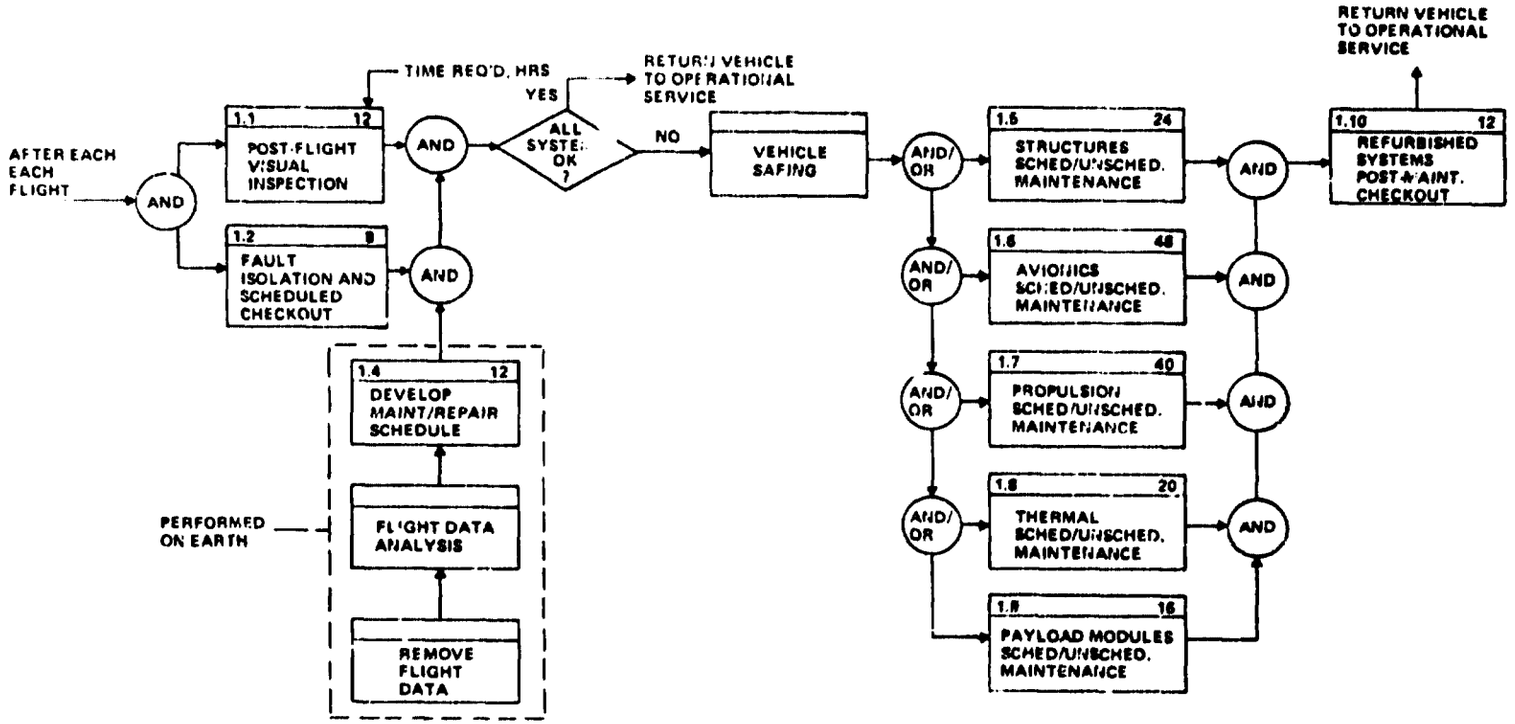

Figure 11-13. POTV Maintenance Functional Flow

Following each flight, the POTV is subjected to a detailed visual inspection to assess the following:

a. Vehicle structure condition
b. Verification of proper subsystem installation
c. Containment of fluids
d. General condition of the vehicle
e. General cleanliness of the vehicle

Inspection of spaces not readily accessible, and the non-destructive evaluation of structural and mechanical equipment, will be completed on a periodic basis depending on the number of missions completed and total flight hours. (Inspections will be performed throughout the maintenance and checkout cycle on a progressive basis to ensure vehicle integrity.)

Fault isolation and scheduled checkout of subsystems are conducted to determine subsystem functional integrity, to locate anomalies, and to assist in the determination of the vehicle's maintenance requirements. During the performance of the above activities, trend analysis of in-flight data is conducted to determine requirements for unscheduled maintenance plan. The plan for scheduled and unscheduled maintenance utilizes and correlates data from inspection, fault isolation and scheduled checkout, and flight data analysis.

If the vehicle receives a clean bill of health and scheduled maintenance is not required, it is readied for the next flight. If not, following the preceding activities, scheduled and unscheduled maintenance will be performed on the required subsystems as identified in the vehicle maintenance plan in order to restore the vehicle to a flight ready condition. If major work is required, additional maintenance crew will be borrowed from other LEO Base maintenance teams and/or crews will be sent up from Earth, depending upon the severity of the problems. Maintenance and repair actions will be initially verified by conducting a post maintenance checkout of the refurbished subsystems.

A detailed plan for each of the maintenance functions shown in Figure 11-13 are given in Tables 11-2 through 11-11. The support equipment items called out in the maintenance plans are described in Table 11-12. The personnel called out one identified in Table 11-13. The facilities identified are called out in Table 11-14.

FUNCTIONAL FLOW BLOCK NO. 1.1	FUNCTION TITLE Post-Flight Visual Inspection	TIME DURATION IN: (WKHRS) 12

GENERAL DESCRIPTION:

All accessible areas of the OTV will be visually inspected in order to assess the overall status of the vehicle.

SUBACTIVITY SEQUENCE & DESCRIPTION:

1.1.1 Inspect structure (3.5 hrs)
1.1.2 Inspect sub-system installation (3.5 hrs)
1.1.3 Verify cleanliness and safety of propellant systems (2.0 hrs)
1.1.4 Inspect exterior of all stages and payload modules for damage (3.0 hrs)
1.1.5 Inspect spacecraft adapter for damage

SUPPORT REQUIREMENTS: (P=Personnel, G=GSE, F=Facilities)

SUB-ACTIVITY SEQUENCE NO.	G A-001	P 004-01	P 004-03														
1.1.1	x	1	1														
1.1.2	x	1	1														
1.1.3	x	1	1														
1.1.4	x	1	1														
1.1.5	x	1	1														

OFF-LINE ACTIVITIES & SUPPORT REQUIREMENTS:

Table 11-2. Post-Flight Visual Inspection

FUNCTIONAL FLOW BLOCK NO. 1.2	FUNCTION TITLE Fault Isolation and Scheduled Checkout	TIME DURATION IN: (WKHRS) 8

GENERAL DESCRIPTION:

Systems testing will be accomplished to determine system status and provide data for maintenance scheduling.

SUBACTIVITY SEQUENCE & DESCRIPTION:

1.2.1 Apply power (0.5 hr)
1.2.2 Perform electrical/avionics systems test (2.0 hrs)
1.2.3 Perform propulsion systems test (2.0 hrs)
1.2.4 Review data (2.0 hrs)
1.2.5 Identify faults (1.5 hrs)

SUPPORT REQUIREMENTS: (P=Personnel, G=GSE, F=Facilities)

SUB-ACTIVITY SEQUENCE NO.	G A-001	G E-002	G E-003	G E-007	G E-008	G E-009	G E-010	G E-011	G S-005	G S-006	G S-007	G S-008	G X-001	P 001	P 002-01	P 002-02	P 002-03	P 003-01	P 003-02	P 003-03	P 004-03
1.2.1	x	x																1			1
1.2.2	x	x	x	x	x	x	x	x					x			1	1	1			1
1.2.3	x								x	x	x	x	x	1	1				1	1	1
1.2.4														1							1
1.2.5														1							1

OFF-LINE ACTIVITIES & SUPPORT REQUIREMENTS:

Table 11-3. Fault Isolation and Scheduled Checkout

FUNCTIONAL FLOW BLOCK NO. 1.3	FUNCTION TITLE Flight Data Analysis	TIME DURATION IN: (WKHRS) 12

GENERAL DESCRIPTION:

Flight data obtained from the POTV by telemetry will be evaluated to determine required maintenance actions.

SUBACTIVITY SEQUENCE & DESCRIPTION:

1.3.1 Review flight crew logs (4.0 hrs)

1.3.2 Decode and/or print flight recorder tapes and telemetry data (3.0 hrs)

1.3.3 Review tape and telemetry data to determine required maintenance actions (5.0 hrs)

SUPPORT REQUIREMENTS: (P=Personnel, G=GSE, F=Facilities)

SUB-ACTIVITY SEQUENCE NO.	F 002-02	F 002-04	P 008															
1.3.1	x	x	1															
1.3.2	x	x	1															
1.3.3	x	x	1															

OFF-LINE ACTIVITIES & SUPPORT REQUIREMENTS:

- o Requires computer operators and data analysts
- o Much of this function would be performed on Earth at the Mission Control Center

Table 11-4. Flight Data Analysis

FUNCTIONAL FLOW BLOCK NO. 1.4	FUNCTION TITLE Develop Maintenance Repair Schedule	TIME DURATION IN: (WKHRS) 12

GENERAL DESCRIPTION:

Based on the flight data results and post-flight inspection, a maintenance/repair schedule incorporating unscheduled items will be prepared.

SUBACTIVITY SEQUENCE & DESCRIPTION:

1.4.1 Compare post-flight checkout data with prior data (4.0 hrs)
1.4.2 Identify unscheduled maintenance action (2.0 hrs)
1.4.3 Review scheduled maintenance plan (2.0 hrs)
1.4.4 Integrate scheduled and unscheduled maintenance actions into final maintenance schedule (4.0 hrs)

SUPPORT REQUIREMENTS: (P=Personnel, G=GSE, F=Facilities)

SUB-ACTIVITY SEQUENCE NO.																		

OFF-LINE ACTIVITIES & SUPPORT REQUIREMENTS:

Data will be evaluated by maintenance and logistics engineering at the Space Vehicle Maintenance Command and Control Center on Earth

Table 11-5. Develop Maintenance Repair Schedule

FUNCTIONAL FLOW BLOCK NO. 1.5	FUNCTION TITLE Structures Scheduled/Unscheduled Maintenance	TIME DURATION IN: (WKHRS) 24

GENERAL DESCRIPTION:

Perform scheduled and unscheduled maintenance operations on structures system.

SUBACTIVITY SEQUENCE & DESCRIPTION:

1.5.1 Review maintenance schedule (2.0 hrs)

1.5.2 Perform scheduled maintenance (TBD)

1.5.3 Perform unscheduled maintenance (TBD)

Note: Scheduled and unscheduled maintenance not to exceed 22 hours.

SUPPORT REQUIREMENTS: (P=Personnel, G=GSE, F=Facilities)

SUB-ACTIVITY SEQUENCE NO.	G A-001	P 001	P 002-03	P 003-02	P 004-03	P 006	F 001-02	F 001-04	F 001-05									
1.5.1		1	2		1													
1.5.2	x	1	2	2	1	1	x	x	x									
1.5.3	x	1	2	2	1	1	x	x	x									

OFF-LINE ACTIVITIES & SUPPORT REQUIREMENTS:

Table 11-6. Structures Scheduled/Unscheduled Maintenance

FUNCTIONAL FLOW BLOCK NO. 1.6	FUNCTION TITLE Avionics Scheduled/Unscheduled Maintenance	TIME DURATION IN: (WKHRS) 48

GENERAL DESCRIPTION:

Perform scheduled and unscheduled maintenance operations on avionics system.

SUBACTIVITY SEQUENCE & DESCRIPTION:

1.6.1 Review maintenance schedule (2.0 hrs)

1.6.2 Perform scheduled maintenance (TBD)

1.6.3 Perform unscheduled maintenance (TBD)

Note: Scheduled and unscheduled maintenance not to exceed 46 hours.

SUPPORT REQUIREMENTS: (P=Personnel, G=GSE, F=Facilities)

SUB-ACTIVITY SEQUENCE NO.	G A-001	G E-007	G E-008	G E-009	G E-010	G E-011	G E-012	G X-001	G X-006	P 001	P 002-02	P 003-01	P 004-03	F 001-02	F 001-04	F 001-05	
1.6.1										1			1				
1.6.2	x	x	x	x	x	x	x	x	x	1	1	1	1	x	x	x	
1.6.3	x	x	x	x	x	x	x	x	x	1	1	1	1	x	x	x	

OFF-LINE ACTIVITIES & SUPPORT REQUIREMENTS:

Table 11-7. Avionics Scheduled/Unscheduled Maintenance

FUNCTIONAL FLOW BLOCK NO. 1.7	FUNCTION TITLE Propulsion Scheduled/Unscheduled Maintenance	TIME DURATION IN: (WKHRS) 40

GENERAL DESCRIPTION:

Perform scheduled and unscheduled maintenance operations on propulsion system.

SUBACTIVITY SEQUENCE & DESCRIPTION:

1.7.1 Review maintenance schedule (2.0 hrs)

1.7.2 Perform scheduled maintenance (TBD)

1.7.3 Perform unscheduled maintenance (TBD)

Note: Total of scheduled and unscheduled maintenance not to exceed 18 hours.

SUPPORT REQUIREMENTS: (P=Personnel, G=GSE, F=Facilities)

SUB-ACTIVITY SEQUENCE NO.	G A-001	G H-001	G F-002	G F-003	G F-004	P 001	P 002-01	P 003-03	P 004-03	F 001-02	F 001-04	F 001-05						
1.7.1						1		2	1									
1.7.2	x	x	x	x	x	1	2	2	1	x	x	x						
1.7.3	x	x	x	x	x	1	2	2	1	x	x	x						

OFF-LINE ACTIVITIES & SUPPORT REQUIREMENTS:

Major overhaul would be performed on the vehicle after it would be returned to Earth.

Table 11-8. Propulsion Scheduled/Unscheduled Maintenance

FUNCTIONAL FLOW BLOCK NO. 1.8	FUNCTION TITLE Thermal Scheduled/Unscheduled Maintenance	TIME DURATION IN: (WKHRS) 20

GENERAL DESCRIPTION:

Perform scheduled and unscheduled maintenance operations on thermal system.

SUBACTIVITY SEQUENCE & DESCRIPTION:

1.8.1 Review maintenance schedule (2.0 hrs)

1.8.2 Perform scheduled maintenance (TBD)

1.8.3 Perform unscheduled maintenance (TBD)

Note: Total of s duled and unscheduled maintenance not to exceed 18 hours.

SUPPORT REQUIREMENTS: (P=Personnel, G=GSE, F=Facilities)

SUB-ACTIVITY SEQUENCE NO.	G A-001	G H-008	P 001	P 002-03	P 002-04	P 003-02	P 003-03	P 004-03	P 006	F 001-02	F 001-04	F 001-05						
1.8.1			1					1										
1.8.2	x	x	1	1	1	2	2	1	1	x	x	x						
1.8.3	x	x	1	1	1	2	2	1	1	x	x	x						

OFF-LINE ACTIVITIES & SUPPORT REQUIREMENTS:

Table 11-9. Thermal Scheduled/Unscheduled Maintenance

FUNCTIONAL FLOW BLOCK NO. 1.9	FUNCTION TITLE Payload Modules Scheduled/Unscheduled Maintenance	TIME DURATION IN: (WKHRS) 16

GENERAL DESCRIPTION:

Perform scheduled and unscheduled maintenance on the flight control module, passenger module, and crew supplies module.

SUBACTIVITY SEQUENCE & DESCRIPTION:

1.9.1 Review maintenance schedule (2.0 hrs)

1.9.2 Perform scheduled maintenance (TBD)

1.9.3 Perform unscheduled maintenance (TBD)

Note: Total of scheduled and unscheduled maintenance not to exceed 14 hours.

SUPPORT REQUIREMENTS: (P=Personnel, G=GSE, F=Facilities)

SUB-ACTIVITY SEQUENCE NO.	G A-001	F 001	P 002-02	P 002-03	F 002-04	P 003-02	P 004-03	P 006	F 001-02	F 001-04	F 001-05							
1.9.1		1	1	1	1		1											
1.9.2	x	1	1	1	1	2	1	1	x	x	x							
1.9.3	x	1	1	1	1	2	1	1	x	x	x							

OFF-LINE ACTIVITIES & SUPPORT REQUIREMENTS:

Table 11-10. Payload Modules Scheduled/Unscheduled Maintenance

FUNCTIONAL FLOW BLOCK NO. 1.10	FUNCTION TITLE Refurbished Systems Post Maintenance c/o	TIME DURATION IN: (WKHRS) 12

GENERAL DESCRIPTION:

Perform sub-system testing and inspection to verify integrity of maintenance operations.

SUBACTIVITY SEQUENCE & DESCRIPTION:

1.10.1 Apply power (1.0 hr)
1.10.2 Perform required electrical/avionics systems test (4.0 hrs)
1.10.3 Perform required propulsion system tests (4.0 hrs)
1.10.4 Review data (2.0 hrs)
1.10.5 Identify any additional maintenance action (1.0 hr)

SUPPORT REQUIREMENTS: (P=Personnel, G=GSE, F=Facilities)

SUB-ACTIVITY SEQUENCE NO.	G A-001	G E-002	G E-003	G E-007	G E-008	G E-009	G E-016	G E-011	G S-005	G S-006	G S-007	G S-008	G X-001	P 001	P 002-01	P 002-02	P 002-03	P 002-04	P 003-01	P 003-02	P 003-03	P 004-03
1.10.1	x	x															1		1			1
1.10.2	x												x			1	1	1	1			1
1.10.3	x	x	x	x	x	x	x	x	x	x	x	x	x	1	1					1	1	1
1.10.4														1								1
1.10.5														1								1

OFF-LINE ACTIVITIES & SUPPORT REQUIREMENTS:

Table 11-11. Refurbished Systems Post Maintenance C/O

TABLE 11-12

MAINTENANCE SUPPORT EQUIPMENT

A-001 90M Cherrypicker

This cherrypicker is used to stack the various stages and modules. It is also used in inspection and maintenance tasks.

E-002 Electrical Power Test Set

The electrical power test set provides external stimuli, measurement, and recording capabilities to test components and subassemblies of the electrical power system. The test set includes current switching, dummy loads, power source, circuit isolation, overload protection, and the capability to interface with external recording or monitoring equipment.

E-003 Electrical Load Banks

The electrical load banks consist of fixed and variable resistors, and are used, in conjunction with the electrical power test set, to simulate electrical loads during power distribution tests.

E-007 Communications Test & Checkout Equipment

The communications test and checkout equipment verifies the internal operation of the communications system and its capability to receive, transmit, and respond to external stimuli upon command.

E-008 Guidance & Navigation Test & Checkout Equipment

The guidance and navigation test and checkout equipment verifies the internal operation of the guidance, navigation and control system and its ability to track, make course corrections, and accept external stimuli upon command.

E-009 Control and Data Acquisition Console

This console is to be used by the test conductor. The displays will present real-time data and provide for call-back of prior results. The controls shall be able to activate, sequence, and terminate the testing as necessary. The control encompasses the system under test and is the origin of the pre-programmed test sequences. The interface shall be with the on-board data management systems.

The console will include a count clock system to provide count time and real time. Displays will include digital and video presentations. Switching and other hand controls shall provide convenient, accurate activation, sequencing, and termination of the test operation.

E-010 EMI Test Equipment

This EMI test equipment will be used to verify that no radiated energy from the vehicle components is present that could cause an undesirable response

TABLE 11-12 (con't)

from the vehicle systems; that the vehicle is not susceptible to normal RF power density expected; that no conducted type interference is present that would cause an undesirable response from vehicle systems during EMI testing; and that a safety margin exists on critical circuits.

The EMI test equipment will consist of three systems - an Automatic Receiving and Measurement System (ARMS), an Automatic Transient Detection System (ATDS), and a Radiated Simulation System (RSS).

The ARMS would be used during electromagnetic compatibility check-out to detect radio frequency energy.

The ATDS would be used to verify vehicle systems and circuit integrity during EMI, electrical, and integrated systems testing. The capability for high speed recording of all power bus currents shall be included.

The RSS would be used to simulate the transmitters in performing RF power density measurement tests.

E-011 Memory Load & Verify Unit

This unit will be used to load and verify the Flight Program. It will also be used during initial memory loads. It should have the capability to load and verify the memory from mass storage. A buffering unit should be included to provide the necessary isolation and buffering for interface compatibility.

E-012 Electronics Calibration Equipment

The electronics calibration equipment is used to calibrate the communications and guidance and navigation electronics following maintenance and refurbishment and during checkout.

H-001 Engine Handling Kit

The engine handling kit consists of a stationary engine mounting fixture equipped with lifting lugs, a protective cover for the engine, and a wire rope assembly with spreader bars.

H-002 Engine Alignment Fixture

The engine alignment fixture, which is used to determine the axis of the engine and align it with the stage, consists of dial indicators and mounting hardware, a nozzle exit plane spider device, and a throat centering device.

H-003 Engine Actuator Support Fixture

The engine actuator adjustment kit includes a gauging tool, adapters, torque wrenches, and a set of wrenches. These tools are used to install, adjust, and remove the engine actuators.

TABLE 11-12 (con't)

H-008 Insulation Handling Kit

The insulation handling kit will be used to transport and assist in the installation and removal of the insulation.

S-006 APS Pressure Instrumentation Kit

The APS pressure instrumentation kit consists of two suitcases containing control valves, gauges, and hose assemblies. One suitcase is for fuel and the other is for oxidizer. The kit is used to control and monitor the differential pressure across the propellant tank bladder during checkout and purging operations. The two units supplied are:

S-006-01 APS Fuel Unit
S-006-02 APS Oxidizer Unit

S-007 Main Propulsion System Checkout Accessories Kit

The main propulsion system checkout accessories kit is used to provide regulation, readouts, controls, hoses and adapters required for test and checkout. The kit includes regulator-gauge assemblies with integral control valves, calibration valves, filters, hoses, adapters, quick disconnect fittings, check valves and a suitcase housing.

S-008 APS Checkout Accessories Kit

The APS checkout accessories kit is used to functionally and leak check the APS. It consists of regulators, gauges, hose assemblies, nozzle closures, fitting adapters, quick disconnects, and suitcases. Two units will be supplied as follows:

S-008-01 Fuel Unit
S-008-02 Oxidizer Unit

X-001 Inspection Equipment Kit

The inspection equipment kit is used to perform special types of tests which are required for the vehicle. These items will be packaged in suitcases and identified as follows:

X-001-01 Ultrasonic Scan Unit
X-001-02 Radiography Unit
X-001-03 Mass Spectrometer Leak Detection Unit
X-001-04 Acoustic Leak Detection Unit
X-001-05 Borescope and Fibre Optics
X-001-06 Theodolite

X-006 Servicing Umbilical Set

The servicing umbilical set includes a carrier for alignment and support of cables, connectors, hoses and quick disconnects to provide essential functions for the vehicle. It is used to provide electrical and fluid functions to the vehicle for test and checkout.

TABLE 11-13
MAINTENANCE PERSONNEL

CODE	JOB TITLE	NO. REQ'D[1]
P-001	Vehicle Maintenance Engineer	1
P-002	Technician, Vehicle Maintenance	
-01	Propulsion and Cryogenics	1
-02	Electrical/Electronic Systems	1
-03	Mechanical/Structural Systems	1
P-003	Mechanic	
-01	Electrical	2
-02	Mechanical/Structural	2
-03	Vacuum/Gas/Fluid/Cryogenic System	2
P-004	Inspector	
-01	Safety	1
-02	Quality Control	1
P-006	Cherrypicker Operator	1
P-008	Other	1

1. Additional personnel would be borrowed from other maintenance staffs at the base or they would be delivered to LEO upon demand when POTV is removed from service for major work.

TABLE 11-14

MAINTENANCE FACILITIES

F-001-02 POTV Service Area

The POTV service area will be located at the POTV launching/docking facilities. Floor space and support for performing maintenance assembly, repair, and testing on a POTV flight article, with direct access to support areas will be provided. Consideration must be given to the POTV's size and mass in providing adequate work space, lighting, maneuvering, and physical support. Facility power, fluids, and gases will be provided. A floor space of TBD square feet is required.

F-001-04 Subsystems Support Shops

In support of the POTV subsystems, specialty areas are needed for the following:

- o Hydraulics and pneumatics
- o Fuel cell/battery maintenance
- o Electrical/electronics
- o Metal working/welding

These specialty areas assist with work which cannot be accomplished directly on the vehicle and provide specialists for on-vehicle tasks requiring special tools and knowledge. Standard facility utilities will be provided. These areas will be located within the Maintenance Module.

F-001-05 General Support Services

The following general support services provide assistance as required:

- o Cleaning room
- o Plastics and MLI area
- o Vehicle maintenance support equipment

Standard facility utilities will be provided. These areas will be located within the Maintenance Module.

F-002-02 Computer and Data Processing Room

The computer and data processing room provides storage and computational capability for mission support and test and checkout support. The computer may be programmed for closed loop command and control. This facility will be located in the Command Operations Module.

F-002-04 Operations Analysis Area

The operations analysis area serves as a working area for systems specialists for resolution of operational problems and for fault analysis. This facility area will be located in the Maintenance Module.

2.5 CARGO TUG IN-SPACE MAINTENANCE PLAN

The reference cargo tug is shown in Figure 11-14. Two of these vehicles are located at each of the orbital bases. This vehicle will be maintained at each of the bases.

The cargo tug is very similar to the POTV. Therefore, the maintenance functional flow and detailed maintenance function plans described in Section 2.4 are applicable.

At the LEO Base, the maintenance support equipment, personnel, and facilities used to maintain the POTV's will also be used to maintain the cargo tug.

At GEO, there will be a set of maintenance support equipment, personnel, and facilities that will be used to maintain the cargo tugs and the vehicles used by the traveling SPS maintenance crews. The maintenance functional flow, support equipment, personnel, and facilities identified in Section 2.4 will also be used.

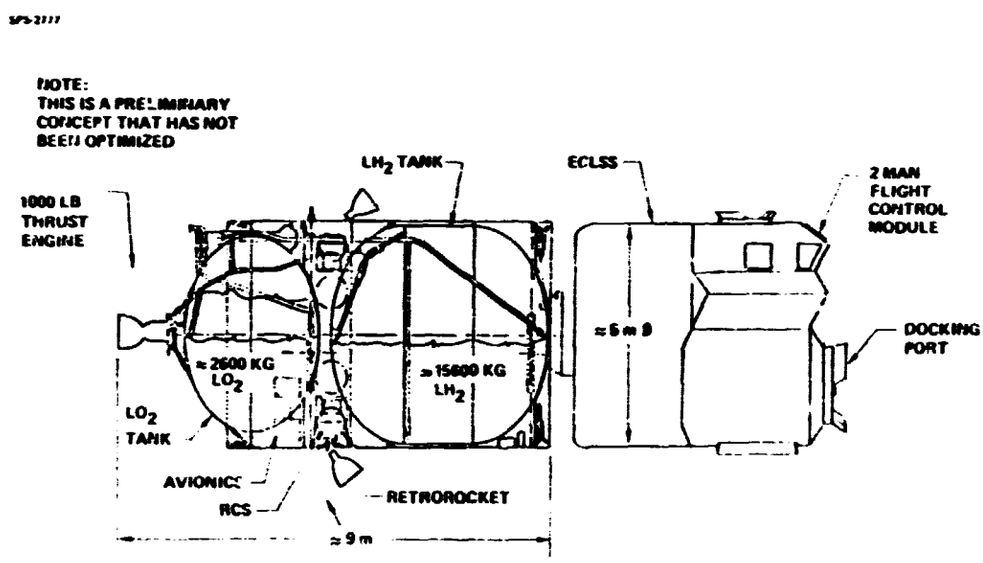

REFERENCE: BOEING AEROSPACE COMPANY OTV PROPOSAL, APRIL 1979

Figure 11-14. Cargo Tug

2.6 SPS MAINTENANCE SUPPORT TRANSPORTATION VEHICLES IN-SPACE MAINTENANCE PLAN

The vehicles associated with the traveling SPS maintenance crew are shown in Figure 11-15.

These vehicles will be maintained at the GEO Base. The maintenance functional flow, detailed maintenance plans, support equipment, personnel, and facilities identified in Section 2.4 will also be applied here. This collection is also used to maintain the 2 cargo tugs stationed at the GEO Base.

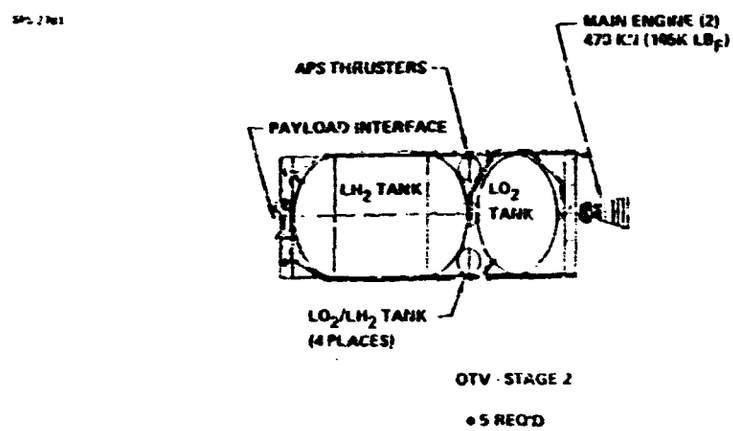

Figure 11-15. SPS Maintenance Support Transportation Vehicle

2.7 SPACE VEHICLE IN-SPACE MAINTENANCE COMMAND AND CONTROL

The command and control tasks that have been identified for the vehicle maintenance operations are listed in Table 11-15.

Recorded flight data from every vehicle is preprocessed and telemetered back to Earth. This data is accessed by the maintenance group who will then process the data. They will be looking for fault annunciations and performance data. The latter is examined to detect performance degradation trends.

Periodically, each vehicle is taken off-line and subjected to a visual inspection and a fault isolation checkout. The results of these inspections are relayed back to the vehicle maintenance group on Earth. This group correlates the inspection data and flight data and makes the judgment as to whether or not scheduled or unscheduled maintenance is required.

TABLE 11-15

COMMAND AND CONTROL TASKS

LOCATION/OPERATION: Space Vehicle In-Space Maintenance

FUNCTION/TASKS	COMMAND & CONTROL TASKS	INTERFACE INTERNAL	INTERFACE EXTERNAL
o Space Vehicle In-Space Maintenance Planning	o Receive SPS program constraints, master schedule		X
	o Receive space vehicle performance data		X
	o Receive space vehicle fault annunciation reports		X
	o Receive vehicle inspection, fault isolation test data		X
	o Receive vehicle maintenance status reports		X
	o Diagnose fault conditions	X	
	o Create vehicle maintenance plans o define list of replacement parts required o prepare detailed time-line maintenance schedule	X	
	o Transmit vehicle maintenance plans to orbital bases		X
	o Order replacement parts		X
	o Coordinate component transportation requirements		X
	o Coordinate vehicle maintenance schedules with user groups		X

TABLE 11-15

COMMAND AND CONTROL TASKS (cont.)

LOCATION/OPERATION: Space Vehicle In-Space Maintenance

FUNCTION/TASKS	COMMAND & CONTROL TASKS	INTERFACE INTERNAL	INTERFACE EXTERNAL
o Space Vehicle Maintenance Crew Operations	o Define crew skills & training requirements	X	
	o Create crew assignments	X	
	o Coordinate borrowing of maintenance crew from other groups		X
	o Schedule crew transportation		X
o LEO Base Vehicle Maintenance Operations	o Transmit vehicle maintenance status reports		X
	o Receive vehicle maintenance plans		X
	o Inventory control	X	
	o Order replacement ports		X
	o Coordinate vehicle intra-base transportation requirements	X	
	o Monitor vehicle maintenance equipment and facilities status o availability o maintenance o replacement equipment o consummables	X	

TABLE 11-15

COMMAND AND CONTROL TASKS (cont.)

LOCATION/OPERATION: Space Vehicle In-Space Maintenance

FUNCTION/TASKS	COMMAND & CONTROL TASKS	INTERFACE INTERNAL	INTERFACE EXTERNAL
o LEO Base Vehicle Maintenance Operations (Continued)	o Control crew operations o assignments o training o scheduling o crew rotation	X	
	o Coordinate vehicle maintenance plan and status with ground-based support group		X
	o Monitor and control vehicle maintenance operations	X	
	o Remotely control/monitor the EOTV Thruster Refurbishment Machines	X	
	o Coordinate maintenance vehicle (flying cherrypicker) maneuvering between LEO Base and the EOTV		X
	o Control/monitor flying cherrypicker	X	
o GEO Base Vehicle Maintenance Operations	o (Same items as LEO Base except delete Item A)		
	o Remotely control/monitor EOTV solar array annealing machines	X	

If the vehicle requires maintenance, the vehicle command and control centers are advised and a maintenance schedule is coordinated. The maintenance group will be responsible for creating a detailed maintenance plan. This plan is transmitted to a maintenance engineer at the base who will then implement the plan.

For particularly difficult maintenance jobs, it may be necessary to borrow maintenance people from the other maintenance crews located at the base. If so, the request for support is coordinated with the LEO or GEO Base C&C groups.

If it is necessary to ship replacement parts to LEO or GEO, the maintenance group coordinates their shipping needs with a cargo transportation C&C group.

If it is necessary to deliver maintenance specialists from Earth to a base, the maintenance group will coordinate their needs with a personnel transportation C&C group.

If it is necessary to ship a vehicle stage back to Earth for major overhaul, the transportation needs are coordinated with the cargo transportation C&C group.

3.0 INTEGRATED SPACE VEHICLE IN-SPACE MAINTENANCE PLAN

The transportation vehicles that will be maintained in space include the EOTV, POTV, Cargo Tug, and SPS Maintenance Support Vehicles (see Figure 11-16). The fleet sizes the base(s) where the various vehicles are to be maintained, and their maintenance frequencies are shown in the figure. Note that the HLLV and PLV orbiters are not to be maintained in-space.

Vehicle maintenance crews stationed at each of the bases, see Table 11-16, will perform the necessary maintenance. If the required maintenance jobs require more manpower, maintenance technicians and mechanics can be borrowed from other maintenance crews at the base (e.g., from the base systems maintenance crew). If the problem is very complex, specialists will be sent to the base from Earth. With the exception of the EOTV, the vehicle stages could be shipped back to Earth for major refurbishment if it becomes infeasible to repair it in-space.

VEHICLE	EOTV	POTV	CARGO TUG	SPS MAINT SUPPORT VEHICLES
	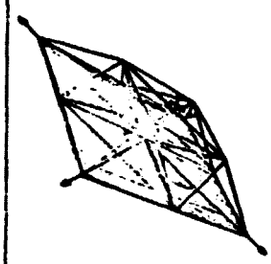			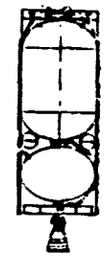
NO. OF VEHICLES IN FLEET	• 23	• 2 (1 + 1 SPARE)	• 2 AT LEO BASE • 2 AT GEO BASE	• 5 (4 + 1 SPARE)
WHERE MAINTAINED	• SOLAR ARRAY ANNEALED AT GEO BASE • EVERYTHING ELSE MAINTAINED AT LEO BASE	• LEO BASE	• LEO BASE • GEO BASE	• GEO BASE
MAINT FREQUENCY	• AT LEO BASE EVERY TRIP • AT GEO BASE EVERY TRIP	• AFTER EVERY ROUNDTRIP	• AFTER 15-20 FLTS	• AFTER 90 DAYS TOUR OF DUTY

1 THE HLLV AND PLV ORBITERS ARE MAINTAINED ON EARTH-NO IN-SPACE MAINTENANCE IS PLANNED

Figure 11-16. Space Vehicles and In-Space Maintenance Locations

TABLE 11-16

SPACE VEHICLE IN-SPACE MAINTENANCE CREW

JOB TITLE	NUMBER REQ'S [1] LEO BASE	GEO BASE
Vehicle Maintenance Supervisor [4]	1	1
Vehicle Maintenance Engineer [4]	1	1
Vehicle Maintenance Technicians [4]		
o Propulsion and Cryogenics	1	1
o Electrical/Electronic Systems	1	1
o Mechanical/Structural Systems	1	1
o Environmental Control Life Support Systems	1	1
Vehicle Maintenance Mechanics [4]		
o Electrical Systems	2	1
o Mechanical/Structural Systems	2	1
o Vacuum/Gas/Fluid/Cryo System	2	1
Inspectors [4]		
o Safety	1	1
o Quality Control	1	1
Cherrypicker Operator	5 [2]	5 [2]
Thruster Refurbishment Machine Operator	2	-
Component Refurbishment Mechanics and Technicians	[3]	[3]
Annealing Machine Operator	-	2
Other	1	1
TOTAL	22	19

[1] Number listed is the number of people required to staff the position over 2 shifts
[2] Includes flying cherrypicker operators
[3] Technicians and mechanics perform the refurbishment tasks between the times when they work at the vehicles
[4] These crew members will be EVA qualified.

Section 12
GEO BASE OPERATIONS

CONTENTS

Subsection		Page
1	INTRODUCTION	12-1
2	GEO BASE OPERATIONS REQUIREMENTS	12-3
	2.1 Base Operations and Control	12-3
	2.1.1 SPS GEO Base Operational Interfaces	12-4
	2.1.2 GEO Base Operations Control	12-6
	2.2 Crew Operations	12-6
	2.2.1 GEO Base Personnel	12-12
	2.2.2 Radiation Exposure and Protection	12-13
	2.3 Base/Satellite Construction Attitude	12-19
	2.3.1 Candidate GEO Construction Attitudes	12-21
	2.3.2 Sun Illumination on Base/SPS	12-22
	2.3.3 EOTV Cargo Unloading Considerations	12-23
	2.3.4 GEO Base Flight Control Requirements	12-23
3	SATELLITE CONSTRUCTION OPERATIONS	12-27
	3.1 General Construction Approach	12-27
	3.1.1 Construction Analysis Emphasis	12-31
	3.1.2 4 Bay End Builder Timeline	12-31
	3.1.3 Ground Rules and Assumptions	12-34
	3.1.4 Construction Equipment	12-38
	3.2 Energy Conversion System Assembly	12-45
	3.2.1 Fabricate and Assemble Structure	12-53
	3.2.2 Install Solar Array Blanket Strings	12-95
	3.2.3 Install Power Distribution Network	12-108
	3.2.4 Install Attitude Control System	12-120
	3.2.5 Other Subsystems	12-123
	3.2.6 Inspection Operations	12-123
	3.3 Power Transmission System Assembly	12-125
	3.3.1 Assembly Structure	12-128
	3.3.2 Install Power Bus	12-132
	3.3.3 Install Phase Control	12-132
	3.3.4 Install Subarrays	12-132

CONTENTS (contd)

Subsection		Page
	3.4 Subassembly Factories	12-134
	3.5 Interface Assembly and Systems Mating	12-134
	3.5.1 Installation Requirements	12-134
	3.5.2 Interface Assembly Approach	12-138
	3.5.3 Yoke Rotary Joint Assembly	12-138
	3.5.4 Final System Mating	12-142
	3.6 Final Test and Checkout	12-143
4	SATELLITE MAINTENANCE OPERATIONS SUPPORT	12-145
5	EOTV MAINTENANCE SUPPORT	12-149
6	INTRA BASE LOGISTICS	12-153
	6.1 Cargo Handling and Distribution Flow	12-155
	6.2 Level J Logistic Operations	12-155
	6.2.1 Level J Cargo Docking/Unloading Sorting/ Center	12-159
	6.2.2 Cargo Staging and Distribution System	12-159
	6.2.3 GEO Base Personnel Distribution and Transfer	12-166
	6.2.4 Crew Quarters/Operations Center	12-166

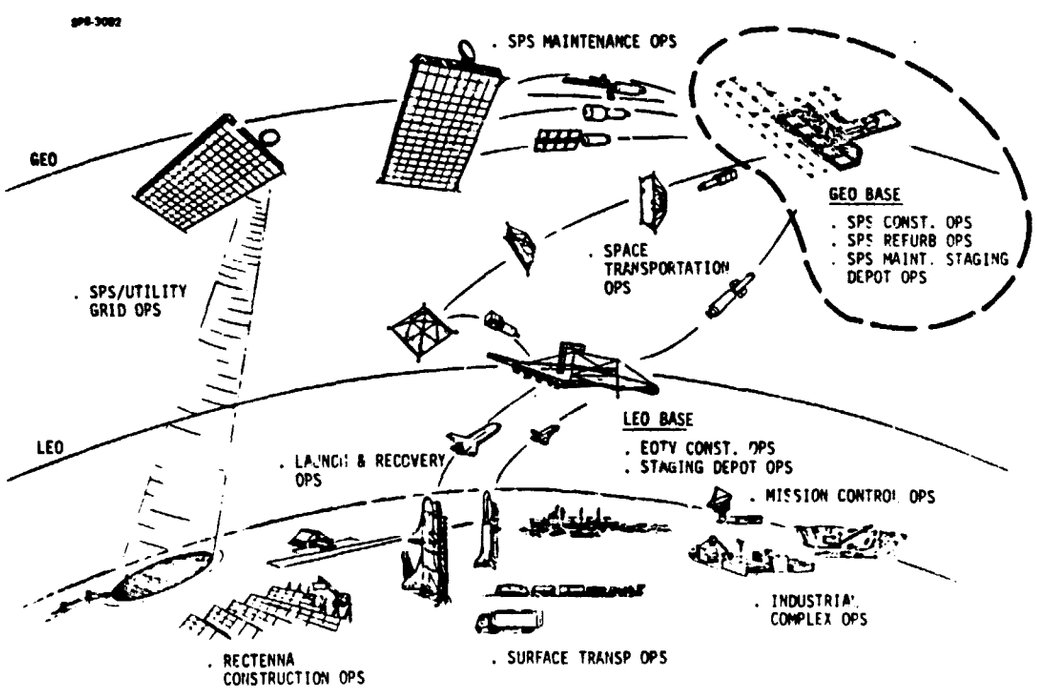

Section 12

GEO BASE OPERATIONS

1 - INTRODUCTION

Construction of the 5000 MW reference satellite takes place in GEO. Consequently, the personnel needed to activate the 4 Bay End Builder Construction Base must travel first by means of the Shuttle to LEO and finally by means of an orbital transfer vehicle (OTV) which operates from the LEO base.

The 4 bay end builder assembles the SPS satellite in two successive passes as shown by the construction sequence illustrated in Figure 12-1. During the first pass, the GEO construction base builds a 4 bay wide strip by 16 bays long. Construction of the satellite antenna is performed in parallel. When one-half of the satellite energy conversion system has been assembled, the base is indexed to the side and then back along the edge of the satellite. The base is realigned with the end frame of the satellite to start the second construction pass. The remaining 4 bay wide strip is attached directly to the assembled satellite systems as the base moves toward the other end. Large electric orbital transfer vehicles (EOTV) will deliver SPS materials and components throughout the assembly process. GEO base crews will also be rotated as needed. The satellite antenna is completed in parallel with the construction of the 8 x 16 bay energy conversion system. At the end of the second pass, the base is indexed sideward to mate the antenna with the centerline of the energy conversion system Following the satellite final test and checkout, the base will be separated from the satellite and transferred to the next SPS GEO construction location.

Requirements for GEO base operations, satellite construction operations, satellite maintenance operations support, EOTV maintenance support and intrabase logistics are discussed subsequently. This section includes Grumman's work on SPS construction base operations and Boeings work related to antenna assembly and EOTV/SPS maintenance support operations.

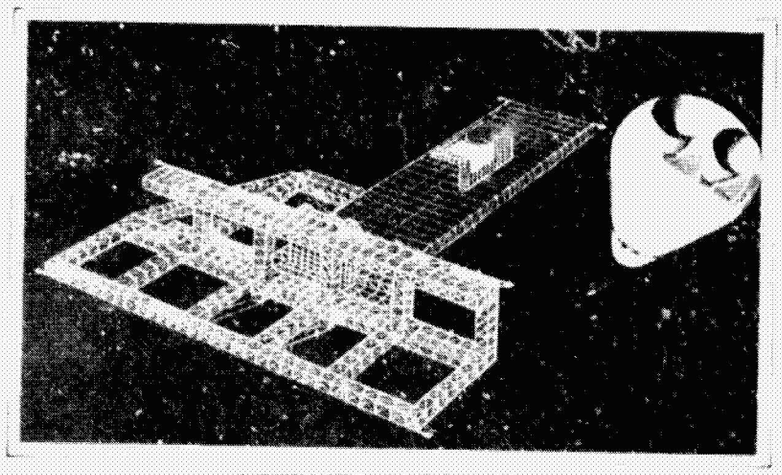

ACTIVATE GEO BASE

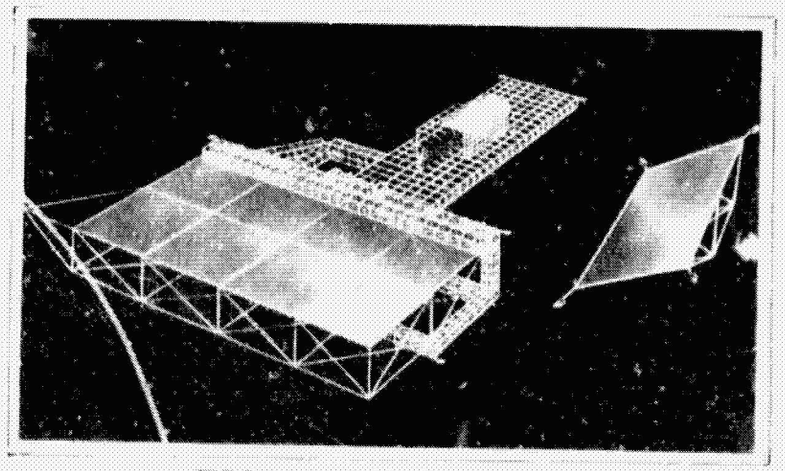

FIRST CONSTRUCTION PASS

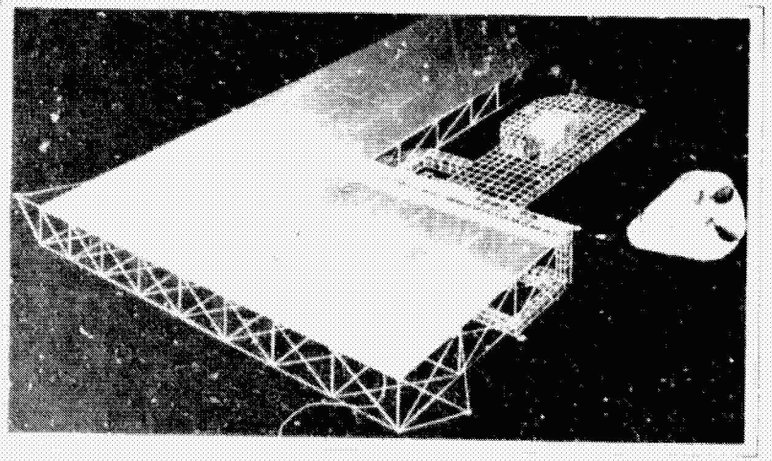

SECOND CONSTRUCTION PASS

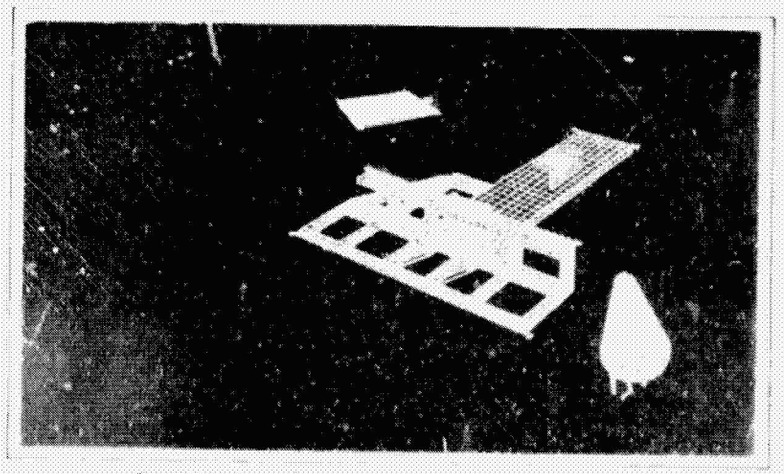

CHECKOUT SPS & TRANSFER BASE

Figure 12-1 SPS – 4 Bay End Builder Construction

REPRODUCIBILITY OF THE ORIGINAL PAGE IS POOR

2 - GEO BASE OPERATIONS REQUIREMENTS

The SPS GEO construction base is used to build and commission two 5 GW reference satellites per year for 30 years. The GEO base is also required to support the maintenance activities on operational Solar Power Satellites and to service supporting elements of the SPS space transportation system (i.e., OTVs and EOTVs). The crew jobs and organizations for constructing and maintaining the SPS in GEO are defined in the Phase I Final Report Reference System Description (Volume III, D180-25037-3) and the Phase II Second Monthly Report (April 1979), respectively. The GEO construction facility includes many functions related to the operation of construction equipment, operation of base systems, and the support of crew operations. As the SPS reference system matures, all aspects of GEO base operations must be examined to verify system feasibility and identify areas needing further development. Several technology issues related to GEO base operations are listed in Figure 12-2. While most of these issues are beyond the scope of this study, they include further analysis of required base functions, degree of automation, related crew functions and type of organization needed. Control of the diverse base functions is addressed below but it requires further study to size and cost preliminary command and control systems. Other areas which require further study include: the impact of frquent crew rotation and related training requirements to maintain high productivity; crew habitability requirements for zero gravity versus artificial gravity plus related health, safety and rescue operational requirements for SPS construction; and operational limitations for IVA and EVA with required protection from ionizing radiation and other GEO environmental effects. In addition, base attitude control and required operational interfaces need further study.

The following paragraphs describe the major aspects of base operations, interfaces and control, crew operations, radiation protection and satellite construction attitude.

2.1 BASE OPERATIONS & CONTROL

The GEO Base performs three main functions:

- Construct solar power satellites (SPS)
- Service and maintain operational SPS
- Service flight logistic vehicles.

- CONSTRUCT TWO 5GW SATELLITES PER YEAR FOR 30 YEARS
- SUPPORT OPERATIONAL SATELLITE MAINTENANCE
- SERVICE FLIGHT TRANSPORTATION VEHICLES
- GEO BASE PHASE 1 CREW JOBS & ORGANIZATION (D180-25037-3)
- SPS MAINTENANCE ORGANIZATION (APR '79 MPR NO. 2)
- GEO BASE OPERATIONS ISSUES
  - CREW FUNCTIONS & ORGANIZATION
  - COMMAND & CONTROL CONCEPT
  - CREW ROTATION & TRAINING POLICY
  - CREW HABITABILITY & HEALTH
  - CREW SAFETY & RESCUE
  - RADIATION PROTECTION & OTHER ENVIROMENTAL CONSTRAINTS
  - BASE ATTITUDE CONTROL
  - OPERATIONAL INTERFACES

1775-060W

Figure 12-2 SPS GEO Base Operations Requirements & Issues

In order to accomplish these functions a number of others are imposed, as defined in Figure 12-3. The base must be capable of docking transportation vehicles, unloading them and then transporting supplies and personnel via a railroad system to work areas. Space workers require habitats that function in a manner similar to hotels, as well as pressurized enclosures that consist of control centers, cherry pickers and transportation vehicles. The construction and base equipment must be maintained and personnel health services must be provided. Because SPS construction will continue for many years, requirements exist for a continuing supply of new space workers. Therefore, training facilities must be provided. All of these functions are to be integrated into the GEO base Command and Control Organization. The operational interfaces and control requirements of the GEO base are discussed subsequently.

2.1.1 SPS GEO Base Operational Interfaces

The major operational interfaces of the GEO Base are shown in Figure 12-4. Earth mission control coordinates all aspects of SPS construction and operation. This includes all the ground and orbital elements. Construction progress, material and personnel needs are reported daily to earth mission control.

The GEO Base receives construction material via Electric Orbit Transfer Vehicles (EOTV). These vehicles are loaded at the LEO base, rendezvous with the GEO Base, and stationkeep while Cargo Tugs transfer material pallets. EOTV terminal rendezvous is coordinated by the GEO base. Cargo Tugs require docking stations, cargo handling equipment and distribution/warehouses. Service & maintenance crews transfer to the EOTV to perform solar array annealing operations.

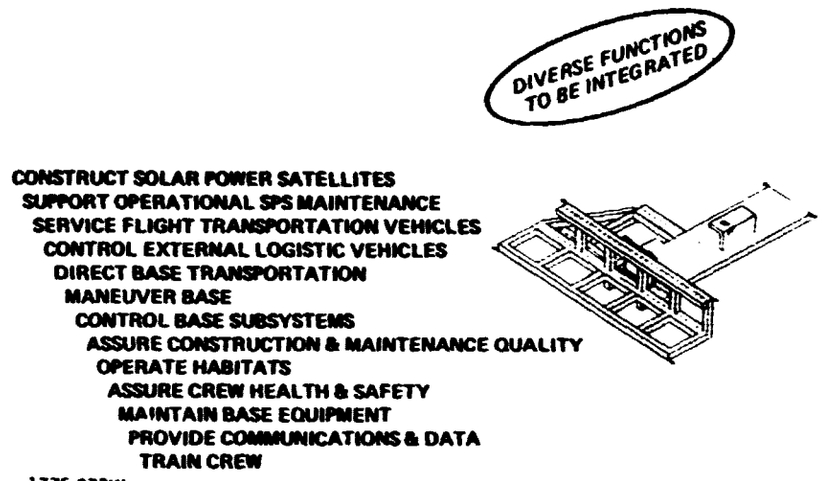

Figure 12-3 GEO Base Operational Functions

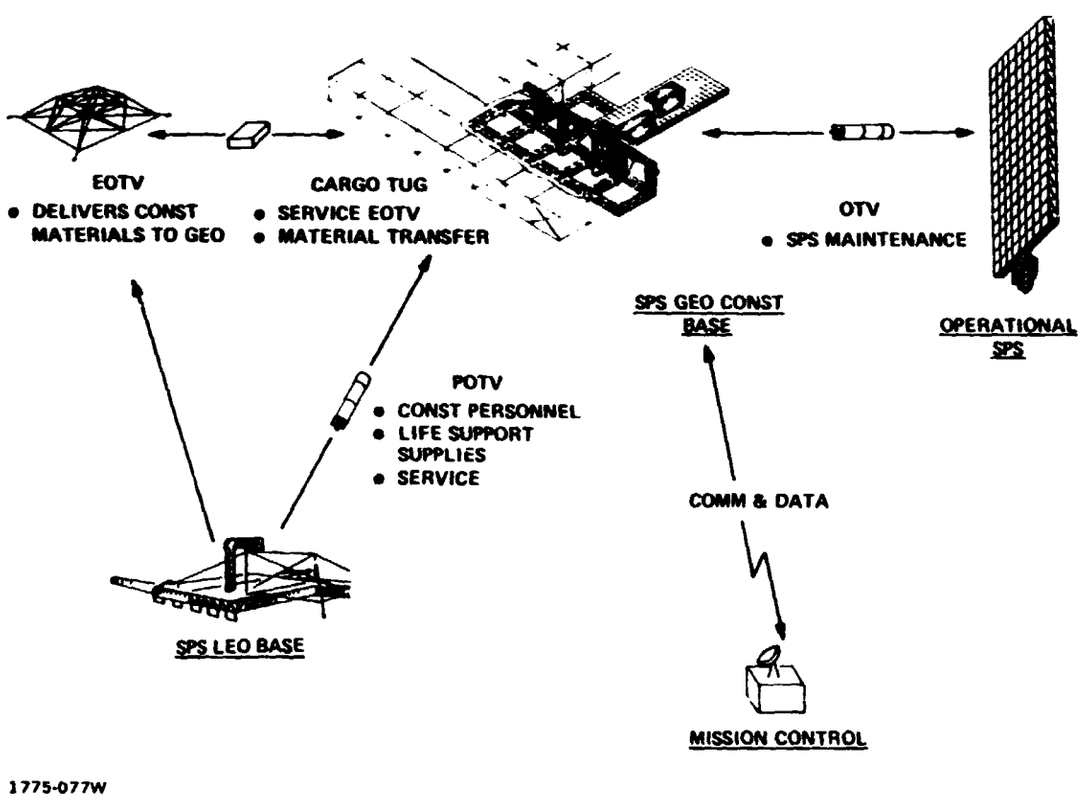

Figure 12-4 SPS GEO Base Operational Interfaces

Personnel and life support supplies are also shipped from the LEO Base utilizing Personnel Orbit Transfer Vehicles (POTV). These vehicles dock to the GEO Base, then crew transportation modules are attached for personnel unloading. Unloading equipment removes life support supplies and the POTV is serviced for return to LEO Base.

The GEO Base also prepares Orbit Transfer Vehicles (OTV) for the trip to service operational SPS. The GEO Base control center directs OTV departures and when the OTV's return, terminal control & docking are also coordinated by the GEO base. Base loading and unloading equipment, plus the necessary transportation/warehousing facilities, are required.

2.1.2 GEO Base Operations Control

The daily command and control of the base is implemented by a number of control centers, as shown in Figure 12-5.

The Base Central Control is where the Base Director, Construction Manager, Base Operation Manager and Base Support Manager are located. They direct and control all related GEO base operations and are supported by staff personnel who assist in planning, scheduling and monitoring base functions. Certain functions such as orbital control of the base, control of external and internal traffic, communications, data and base subsystems are handled directly from the Central Control Center. Other operational functions receive directions from the Central Control Center, but the interface for these functions (construction, habitat, base maintenance, SPS maintenance and flight transportation maintenance) could be performed at other locations.

The medical center is required for personnel well-being and is available should accidents or sickness occur. It is shown reporting directly to the Base Central Control and illustrated in broken lines as it is not primary for daily operations.

Training functions are also not required for day-to-day operations but are necessary for the base long term continuous operation.

Requirements for GEO base internal and external command and control responsibilities are defined and included in Table 12-1.

2.2 CREW OPERATIONS

The SPS Program fosters a new vocation, that of space worker, which will be open to men and women of the U.S., and to a lesser extent, other nationalities in the near future. In some respects it will be similar to the life of a sailor, travelling for ap-

proximately three (3) months then home for about the same length of time. This type of employment could continue for years, with upward advancement in the organization expected, paralleling terrestrial enterprizes.

Current projections are in excess of 450 people involved in the construction and maintenance of the Solar Power Satellite (SPS). This imposes the requirement, as shown in Figure 12-6, for a comprehensive training program that includes a spectrum of construction and support activities. Training facilities will be needed early in the SPS program. A continuing need for SPS training facilities equipment and instructors is expected as the demand for space workers increases with time. Training schedules must meet the needs of crew rotation requirements. Although most training can be accomplished in terrestrial simulators, verification of space adaptation to perform tasks is required in an orbital facility. A training facility in low earth orbit may be a practical solution because a staging depot will likely exist and minimizes travel distance for instructors and supporting personnel. A close-in facility makes sense if students were to be exposed to the space environment prior to completion of training.

GEO base staffing requirements and crew radiation protection requirements are discussed in Subsections 2.2.1 and 2.2.2.

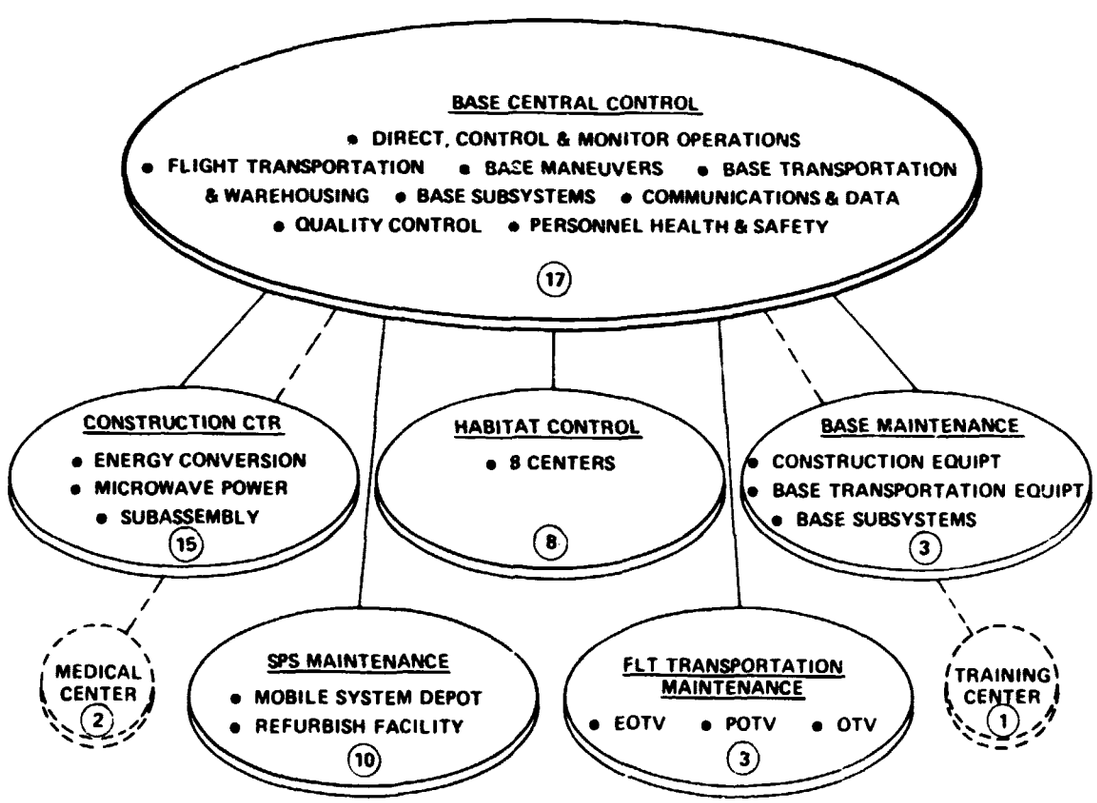

Figure 12-5 GEO Base Operations Control

Table 12-1 GEO Base Operational Tasks – Definition/Responsibility (Sheet 1 of 4)

BASE OPERATIONS FUNCTIONS	COMMAND & CONTROL TASKS	INTERFACE	
		INTERNAL	EXTERNAL
o CONSTRUCT SOLAR POWER SATELLITES	o MANAGE SATELLITE CONSTRUCTION FACILITIES	X	
	- Solar Collector Assembly Facility - Antenna Assembly Facility - Rotary Joint/Yoke Assembly Facility - Subassembly Facility - Remote Work Stations - Construction Equipment & Personnel		
	o PROVIDE CONSTRUCTION STATUS REPORTS		X
	o MAINTAIN CONSTRUCTION MATERIAL INVENTORY CONTROL	X	
	o COORDINATE CONSTRUCTION MATERIAL AND SUPPLY REQUIREMENTS		X
	o COORDINATE CONSTRUCTION PERSONNEL REQUIREMENTS	X	X
	o MONITOR/CONTROL 1st & 2nd PASS ENERGY CONVERSION SYSTEM ASSEMBLY	X	
	o MONITOR/CONTROL POWER TRANSMISSION SYSTEM ASSEMBLY	X	
	o MONITOR/CONTROL INTERFACE SYSTEM ASSEMBLY	X	
	o MONITOR/CONTROL SATELLITE SYSTEM MATING, FINAL TEST & CHECKOUT	X	
	o COORDINATE BASE - SATELLITE SEPARATION SCHEDULE		X
	o COORDINATE/MONITOR INITIAL SATELLITE-GROUND POWER BUILD-UP	X	X
o SUPPORT OPERATIONAL SPS MAINTENANCE	o MANAGE SATELLITE MAINTENANCE DEPOT	X	
	- Component refurbishment facilities - Klystron Tube refurbishment facility - Reconditioned Component storage - Defective Component storage - Maintenance pallet loading/unloading - Equipment and crews at GEO base - Mobile maintenance crews equipment & vehicle fleet		
	o PROVIDE SATELLITE MAINTENANCE SUPPORT STATUS REPORTS		X
	o MAINTAIN MAINTENANCE MATERIAL INVENTORY CONTROL	X	
	o COORDINATE SPS MAINTENANCE MATERIAL & SUPPLY REQUIREMENTS		X
	o COORDINATE SPS MAINTENANCE PERSONNEL REQUIREMENTS		X
	o COORDINATE/MONITOR REMOTE SATELLITE MAINTENANCE		X
	o MONITOR/CONTROL COMPONENT REPAIR OPERATIONS	X	
o SERVICE FLIGHT TRANSPORTATION VEHICLES	o PROVIDE FLIGHT VEHICLE STATUS REPORTS		X
	- EOTV Annealing - GEO based OTV - Cargo Tugs		
	o COORDINATE EOTV ANNEALING SCHEDULE		X
	o MONITOR/CONTROL EOTV ANNEALING	X	
	o COORDINATE OTV AND CARGO TUG PROPELLANT AND SUPPLIES DELIVERY REQUIREMENTS		X
	o MONITOR/CONTROL GEO BASED FLIGHT VEHICLE FUELING	X	
	o MONITOR/CONTROL GEO BASED FLIGHT VEHICLE MAINTENANCE	X	
1775-061W (1/4)			

Table 12-1 GEO Base Operational Tasks (Cont'd) (Sheet 2 of 4)

BASE OPERATIONS FUNCTIONS	COMMAND & CONTROL TASKS	INTERFACE	
		INTERNAL	EXTERNAL
o CONTROL EXTERNAL LOGISTIC VEHICLES	o COORDINATE EOTV LEO-GEO ARRIVAL/DEPARTURE SCHEDULES & CARGO LISTING		X
	o MONITOR EOTV RENDEZVOUS/DE-ORBIT MANEUVERS	X	X
	o MONITOR/CONTROL EOTV STATION-KEEPING AT GEO BASE	X	
	o COORDINATE PERSONNEL OTV LEO-GEO ARRIVAL/DEPARTURE SCHEDULES & PASSENGER LISTINGS		X
	o COORDINATE SATELLITE MAINTENANCE CARGO OTV GEO-GEO ARRIVAL/DEPARTURE SCHEDULES		X
	o COORDINATE MAINTENANCE PERSONNEL OTV GEO-GEO ARRIVAL/DEPARTURE SCHEDULES		X
	o MONITOR OTV RENDEZVOUS/DE-ORBIT MANEUVERS	X	
	o ISSUE OTV DOCKING/DEPARTURE INSTRUCTIONS	X	
	o MONITOR/CONTROL OTV DOCKING AND UNDOCKING OPERATIONS	X	
	o MONITOR/CONTROL OTV LOADING AND UNLOADING OPERATIONS	X	
	o MONITOR/CONTROL CARGO TUG PAYLOAD PALLET REMOVAL/DELIVERY AT EOTV	X	
	o MONITOR/CONTROL CARGO TUG MANEUVERS BETWEEN EOTV & BASE	X	
	o MONITOR/CONTROL CARGO TUG PAYLOAD PALLET DELIVERY/REMOVAL AT BASE	X	
o DIRECT BASE TRANSPORTATION	o MONITOR INTRA-BASE LOGISTIC VEHICLE STATUS	X	
	o COORDINATE BASE LOGISTIC VEHICLE SUPPLY REQUIREMENTS		X
	o MONITOR/CONTROL RAILED CREW TRANSPORT	X	
	o MAINTAIN CARGO WAREHOUSING & DISTRIBUTION CONTROL	X	
	o MONITOR/CONTROL RAILED CARGO TRANSPORT	X	
	o MONITOR/CONTROL BASE FREE FLYERS (MRWS, EVA/MMU, ETC.)	X	
o MANEUVER GEO BASE	o MAINTAIN BASE ATTITUDE CONTROL	X	
	o MAINTAIN BASE EPHEMERIS	X	
	o CONTROL BASE CONSTRUCTION INDEXING	X	
	o COORDINATE BASE CONSTRUCTION INDEXING OPERATIONS SCHEDULE		X
	o CONTROL BASE SATELLITE SEPARATION	X	
	o COORDINATE BASE GEO-GEO MANEUVER SCHEDULE		X
	o CONTROL BASE GEO-GEO TRANSFER MANEUVER	X	
o CONTROL BASE SUBSYSTEMS	o PROVIDE BASE SUBSYSTEM STATUS - Electrical Power - Attitude - Propulsion - Guidance Navigation & Control		X
	o COORDINATE BASE SUBSYSTEM CONSUMABLE AND SUPPLY REQUIREMENTS		X
	o MONITOR/CONTROL BASE SUBSYSTEMS	X	
1775-061W (2/4)			

Table 12-1 GEO Base Operational Tasks (Cont'd) (Sheet 3 of 4)

BASE OPERATIONS FUNCTIONS	COMMAND & CONTROL TASKS	INTERFACE	
		INTERNAL	EXTERNAL
o ASSURE CONSTRUCTION AND MAINTENANCE QUALITY	o PROVIDE CONSTRUCTION QUALITY CONTROL STATUS		X
	o PROVIDE SATELLITE MAINTENANCE QUALITY CONTROL STATUS		X
	o CONTROL SATELLITE CONSTRUCTION INSPECTION AND TEST	X	
	- Subassembly operations - Energy conversion assembly ops - Power Transmission assy ops - Rotary joint & yoke assy ops - System mating operations - Final test and checkout		
	o COORDINATE CONSTRUCTION ARTICLE INSPECTION AND TEST SCHEDULES		X
	o COORDINATE/MONITOR REMOTE SATELLITE MAINTENANCE INSPECTION		X
	o MONITOR/CONTROL RECONDITIONED COMPONENT INSPECTION & TEST	X	
o OPERATE HABITATS	o MONITOR MODULE SUBSYSTEM STATUS	X	
	- Environmental Control/Life support - Food storage & preparation - Dining areas - Crew Quarters - Crew provisions/gear - Housekeeping equipment/supplies - Housekeeping waste - Furnishings - Off Duty/On Duty facilities - Passageways & Mobility aids - Lighting & intercoms - Emergency Power - Flare warning system - Storm shelter		
	o MANAGE CONSTRUCTION AND SATELLITE MAINTENANCE CREW CENTERS	X	
	o COORDINATE MODULE CONSUMABLE AND SUPPLY REQUIREMENTS		X
	o COORDINATE PERSONNEL ROTATION SCHEDULES		X
	o MANAGE TRANSIENT CREW QUARTERS	X	
o ASSURE CREW HEALTH AND SAFETY	o MONITOR PERSONNEL HEALTH STATUS	X	
	o MANAGE BASE MEDICAL ACTIVITIES	X	
	o COORDINATE MEDICAL SUPPLY REQUIREMENTS		X
	o COORDINATE CREW MEDICAL TRANSFER/ROTATION SCHEDULES		X
	o MONITOR/CONTROL BASE OPERATIONS SAFETY	X	
	- Construction personnel & equipment - Maintenance personnel & equipment - Flight personnel and equipment - EVA personnel and equipment		
	o PROVIDE BASE SAFETY STATUS		X
	o COORDINATE BASE SAFETY REQUIREMENTS		X
o MAINTAIN BASE EQUIPMENT	o PROVIDE BASE SUBSYSTEM AND EQUIPMENT MAINTENANCE STATUS	X	X
	- Electrical Power - Attitude Control - Propulsion - GN&C - Comm/Data - ECLS - Other module subsystems - Beam Builders		
1775-061W (3/4)			

Table 12-1 GEO Base Operational Tasks (Cont'd) (Sheet 4 of 4)

BASE OPERATIONS FUNCTIONS	COMMAND & CONTROL TASKS	INTERFACE	
		INTERNAL	EXTERNAL
	- Bus deployers - Cherry Pickers - Other construction equipment - Base logistic equipment		
	o MANAGE BASE MAINTENANCE OPERATIONS	X	
	o MAINTAIN BASE MAINTENANCE SPARES INVENTORY CONTROL	X	
	o COORDINATE BASE MAINTENANCE SPARES REQUIREMENTS		X
o PROVIDE COMMUNICATIONS & DATA	o MANAGE INTRA-BASE COMMUNICATIONS	X	
	- Crew habitats - Base control Center - Maintenance Center - Medical Center - Construction Centers - Maintenance Centers - Training Center - Remote Work Stations - Base Logistic Vehicles - Free Flyers		
	o PROVIDE EXTERNAL BASE COMMUNICATIONS STATUS	X	X
	- Voice links - Telemetry links - Video (color) links - Tracking beacons		
	o MANAGE EXTERNAL COMMUNICATIONS AND DATA	X	
	- External logistic vehicle operations - LEO base coordination - Earth based mission control		
o TRAIN CREW	o RECEIVE CREW TRAINING PROGRAM		X
	o MANAGE GEO CREW TRAINING OPERATIONS	X	
	- Construction tasks - Habitation tasks - Operations tasks - Maintenance tasks		
	o PROVIDE CREW TRAINING STATUS		X
1775-061W (4/4)			

REPRODUCIBILITY OF THE
ORIGINAL PAGE IS POOR

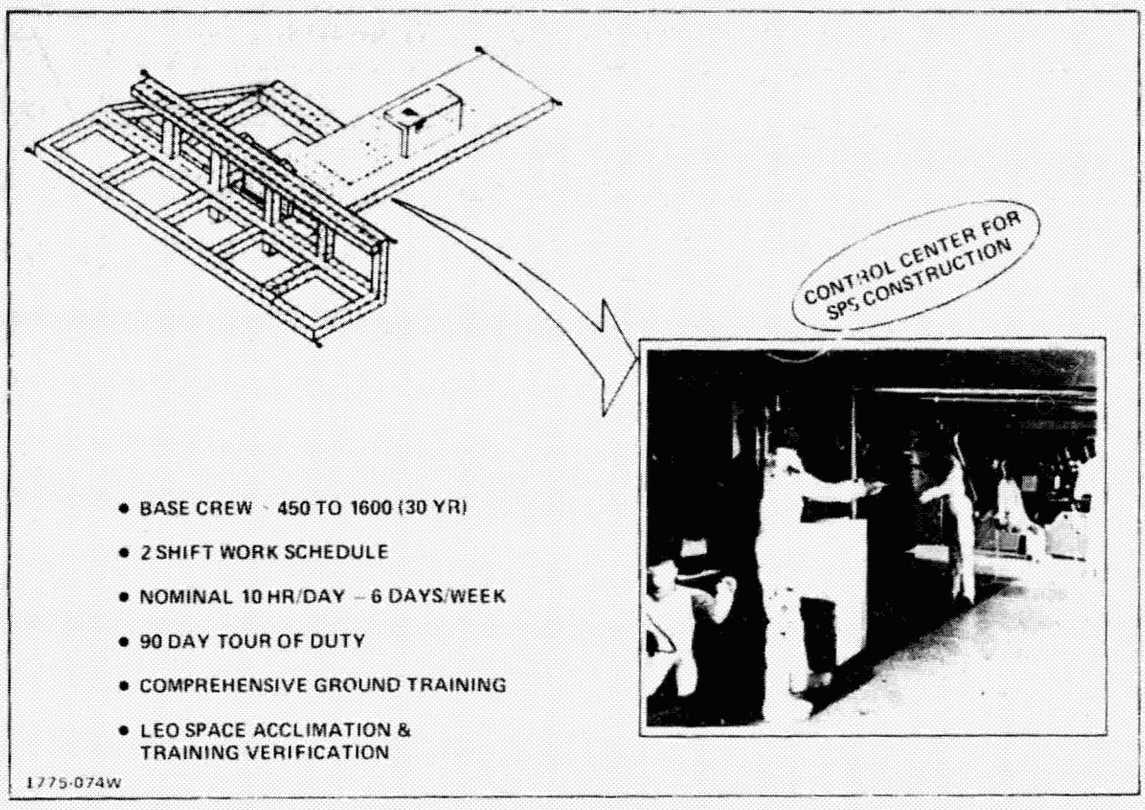

Figure 12-6 GEO Base Crew Operations

2.2.1 GEO Base Personnel

The GEO base is staffed with 444 people, as shown in Figure 12-7, to assemble and checkout one 5GW reference satellite every six months. The construction base operates on two 10 hour shifts per day for six days each week. Assembly of the energy conversion system is timed for simultaneous completion and mating with the power transmission system. Approximately 131 people are required to perform the construction activities on each shift. In addition to construction, other personnel are needed to perform base support system operations, maintain operations safety, provide flight transportation maintenance support, and implement base management. Up to 213 people may work on a single shift; multishift coverage is also provided around-the-clock for mission safety functions. The GEO base crew organization shown in Figure 12-8 has been updated for multishift operations and vehicle support functions.

When SPS operational maintenance support is included, the GEO base crew complement will be increased to perform satellite component refurbishment and related crew support services. The number of personnel required for SPS maintenance and

repair varies with the size of the operational fleet and the maintenance schedule adopted. It is presently planned that scheduled maintenance will be performed on each satellite twice a year, during the fall and spring seasons. When 20 to 60 satellites are being maintained, the total personnel complement varies from 827 to 1593 people. As shown in Figure 12-7, the maximum number of personnel on one shift has been totaled at 648. There are times when the personnel on duty could be considerably less, i.e., during the construction crew's time off.

DISCIPLINE	TOTAL CREW	ONE SHIFT CREW
SPS CONSTRUCTION	(417)	(199)
BASE MANAGEMENT	17	17
CONSTRUCTION	262	131
BASE SUPPORT & OPERATIONS	120	45
OPERATIONS SAFETY	18	6
FLIGHT TRANSPORTATION MAINT	(27)	(14)
EOTV SUPPORT	8	4
OTV SERVICING	19	10
SUBTOTAL	444	213
SPS MAINTENANCE (20 TO 60 SATELLITES)	(383 TO 1149)	(145 TO 435)
REPAIR EQUIPMENT	260 TO 780	130 TO 390
MOBILE MAINTENANCE	83 TO 249	NA
CREW SUPPORT	40 TO 120	15 TO 45
1775-078W TOTALS	827 TO 1593	358 TO 648

Figure 12-7 Number of Base Personnel

2.2.2 Radiation Exposure & Protection

Figure 12-9 shows the earth magnetosphere and the radiation sources to which SPS systems and the GEO assembly and maintenance crew will be subjected. The major sources of radiation at GEO are the geomagnetically trapped electrons and protons, galactic cosmic rays and solar flare event particles. At geostationary orbital altitudes the trapped radiation particles undergo large temporal fluctuations (diurnal and during magnetic storm activity). The types of ionizing radiation important to SPS operations include:

- Electrons and secondary radiation: bremsstrahlung (with variation of factor of two due to parking longitude location)
- Protons (flux from solar flare protons dominates) and secondary radiation protons, neutrons
- Heavy ions (HZE), secondary radiation: protons, neutrons and lighter nuclei.

Other sources of induced radiation environment should also be considered. For example, ionizing radiation due to onboard nuclear powered payloads and equipment, X-Ray equipment, and possible nuclear weapon detonations.

Allowable crew radiation exposure criteria and radiation protections techniques for the GEO base are discussed below.

2.2.2.1 Radiation Exposure Limits - Figure 12-10 lists the current astronaut radiation exposure limits as defined by the National Academy of Science/Radiobiological Advisory Panel/Committee on Space Medicine in 1970. These astronaut radiation exposure limits are based upon a 5-year career and are presently included in the STS Payload Safety Guidelines Handbook. These limits are, of course, intended to cover all forms of ionizing radiation (natural and induced). Comparable radiation exposure limits are also shown for industrial workers, as defined by the Department of Labor OSHA regulations. The low OSHA limits are also contrasted with the maximum radiation limit allowed for each Apollo mission.

It is interesting to note that the average skin dose experienced by the Apollo astronauts was very low (about 1 rem), since no solar event occurred. Nevertheless the maximum limit for Apollo was established for a program of national importance that included less than one hundred volunteer astronauts. The OSHA standards, of course, apply to millions of industrial workers. The SPS construction base is presently estimated to have approximately 800 workers on board, which equates to a 10,000 man work force over a 30-year period. Hence, allowable SPS radiation limits may have to be established with respect to societal considerations.

2.2.2.2 Shielding for GEO Trapped Electrons - The average REMs that a crew member will experience each day in geosynchronous orbit is plotted as a function of equivalent aluminum cabin wall thickness, as shown in Figure 12-11. In order to reduce the skin dose to 1.11 REMs per day for the maximum quarterly exposure limit (i.e., 105 REMs less 5 REMs for OTV LEO/GEO transit) at least 10 mm of aluminum should be provided. Aluminum is not a very effective shield for this level of radiation due to Bremsstrahlung (secondary radiation) effects. However, by adding a thin inner layer of tantalum, the cabin radiation level can be lowered to provide a margin for other unscheduled radiation conditions (e.g., x-ray inspection, etc.). The use of compound wall design techniques is an effective way of coping with Bremsstrahlung which provides increased radiation protection for minimum shield thickness and weight. Practical shielding designs that can reduce the daily dose rate to OSHA levels require further study and remain as a technology issue.

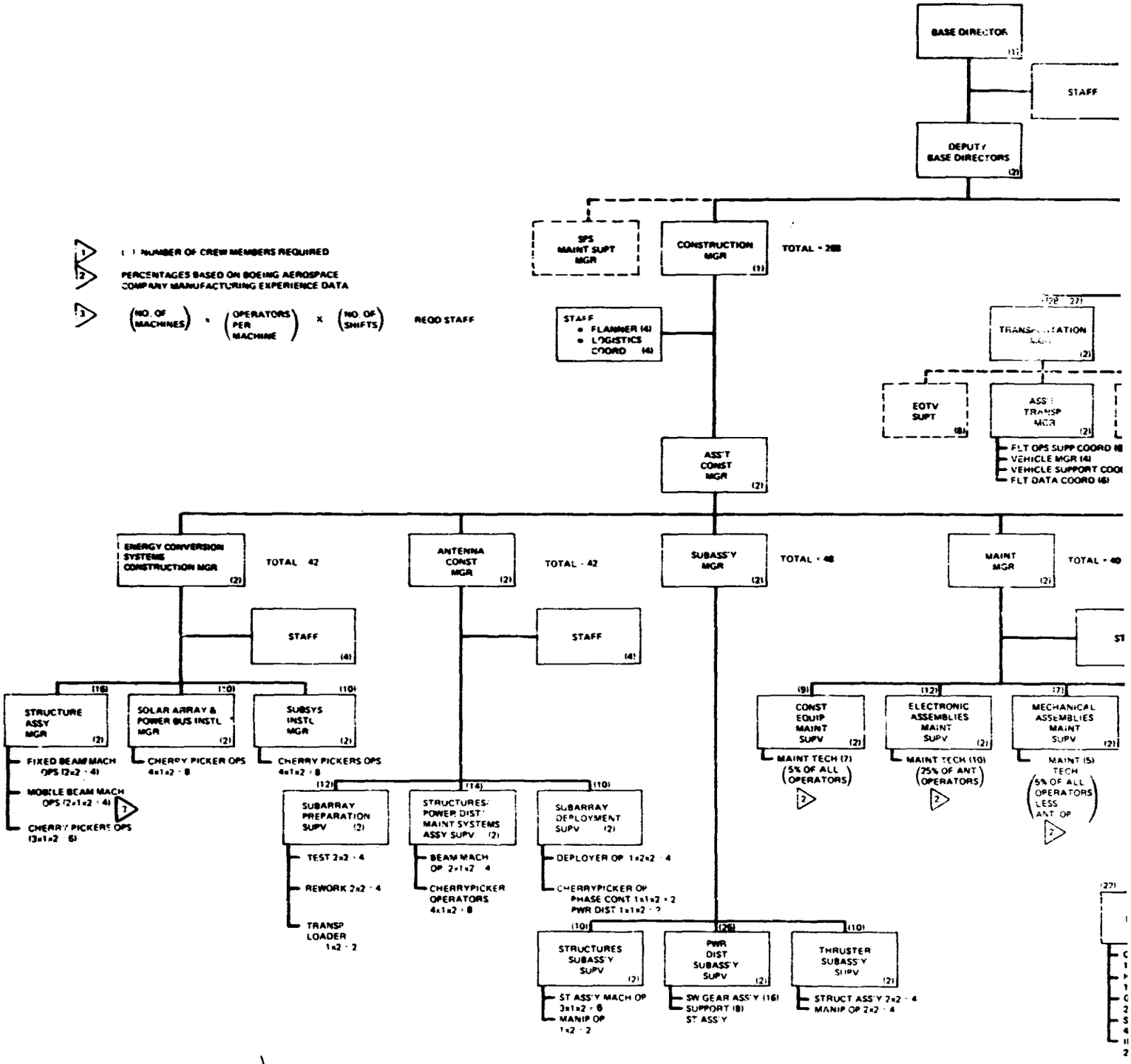

1775-50W

FOLDOUT FRAME

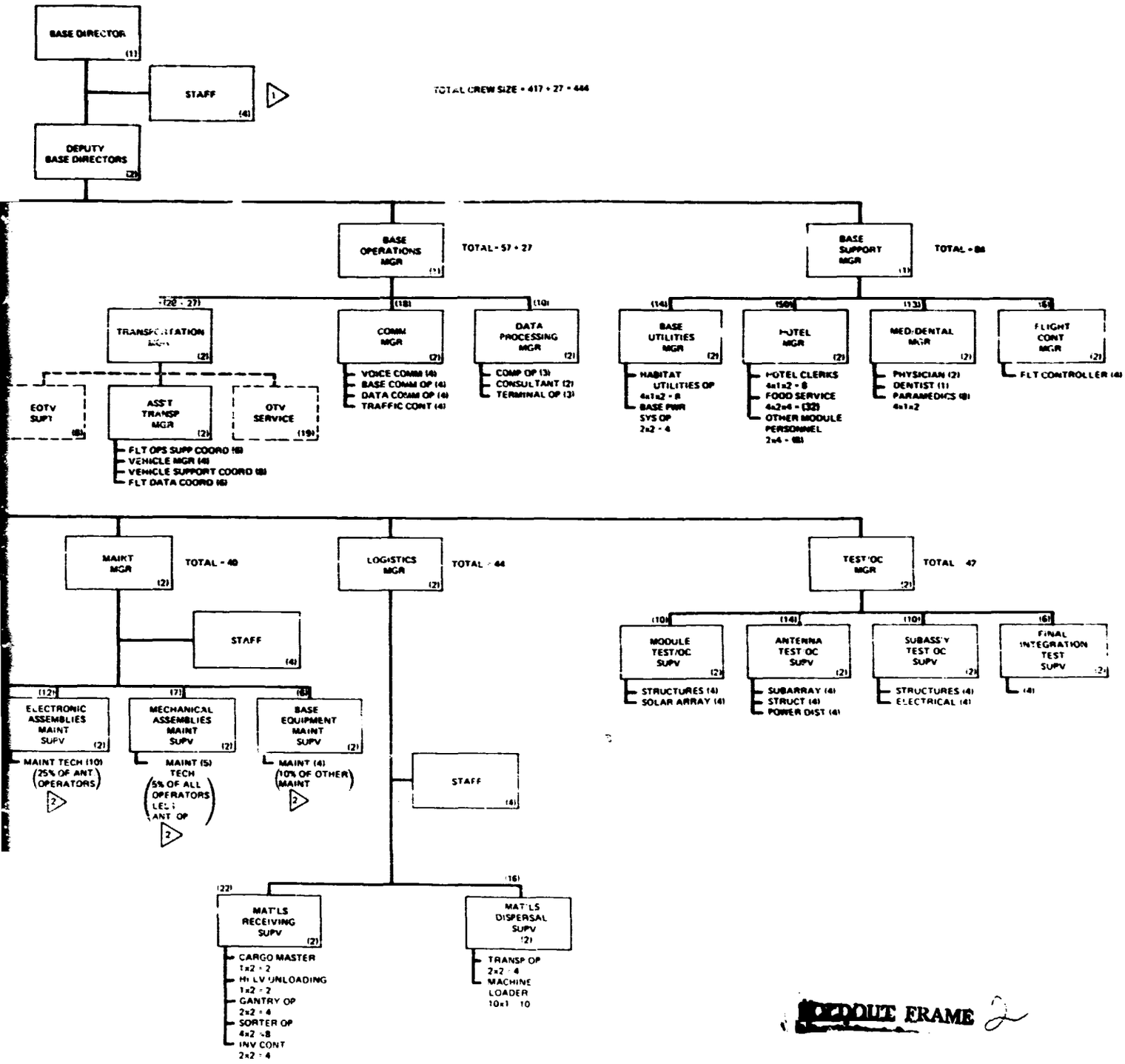

FOLDOUT FRAME 2

Figure 12-8 GEO Base Organization and Crew Jc

REPRODUCIBILITY OF THE ORIGINAL PAGE IS POOR

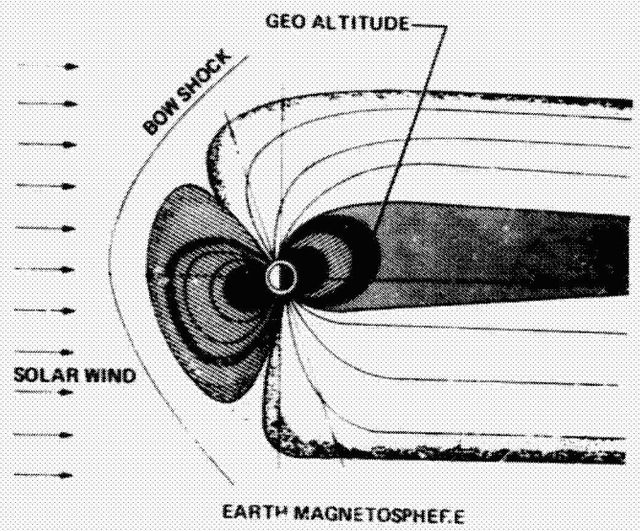

- TRAPPED ELECTRONS & PROTONS
- GALACTIC COSMIC PARTICLES
- SOLAR FLARES
- OTHER SOURCES

1775-063W

Figure 12-9 SPS GEO Radiation Sources

SHOULD INDUSTRIAL LIMITS APPLY TO SPS GEO SPACE WORK FORCE

	ASTRONAUT*			INDUSTRIAL WORKER**	APOLLO MAX LIMIT
	SKIN (0.1mm)	EYES (3mm)	BONE MARROW (5cm)	BFO & EYES	BFO & SKIN
1 YR AVG DAILY RATE	.6	.3	.2		
30-DAY MAXIMUM	75	37	25		65 & 520*** PER MISSION
QUARTERLY MAXIMUM	105	52	35	3	
YEARLY MAXIMUM	225	112	75	5	
CAREER	1200 (5 yr)	600	400	235 (@ 65)	

* SPACE TRANSPORTATION SYSTEM PAYLOAD SAFETY GUIDELINES HDBK NASA/JSC - JSC 11123, JULY 1976

** FEDERAL REGULATIONS - LABOR PART 1910 OSHA - 1 JULY 1978

***APOLLO MISSIONS 7 TO 17 ONLY HAD - 1 REM AVG SKIN CREW DOSE SINCE NO MAJOR SOLAR PARTICLE EVENTS OCCURRED

1775-064W

Figure 12-10 Radiation Exposure Limits & Constraints (REMS)

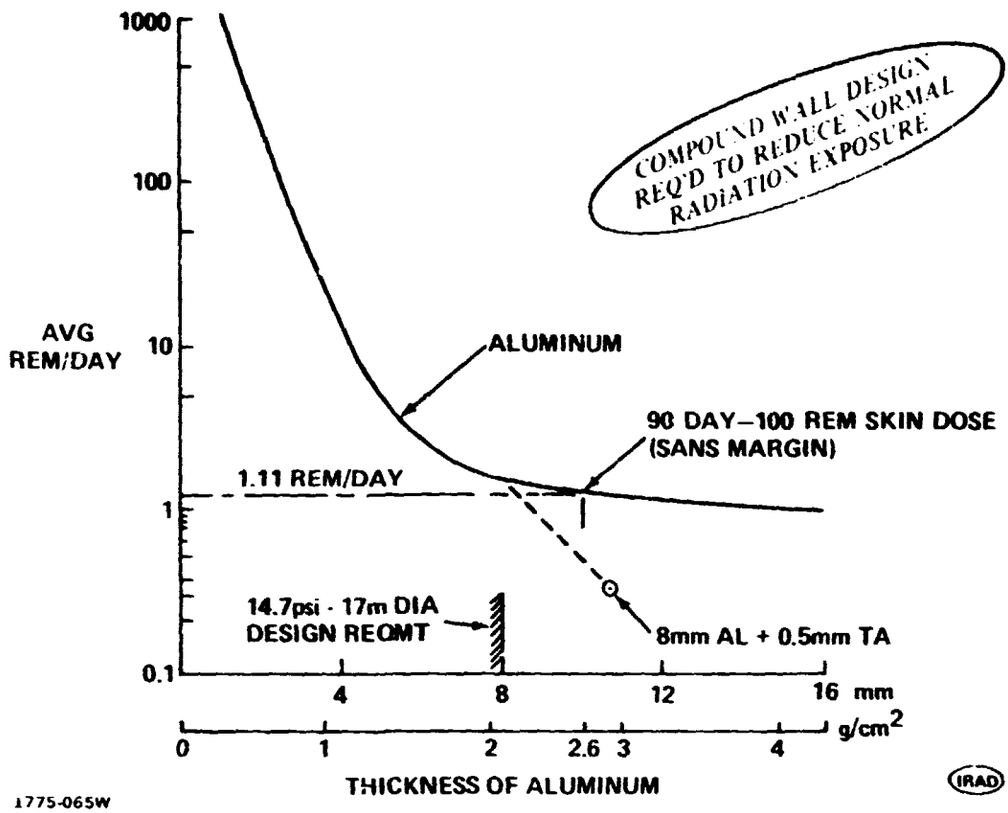

Figure 12-11 Shielding Thickness for GEO Trapped Electrons Plus Bremsstrahlung (270° East Longitude)

2.2.2.3 Solar Flare Radiation Protection - The GEO base solar flare radiation protection system must be able to provide timely warning of a high energy solar event, so that the crew can safely reach a radiation shelter to ride out the storm. The characteristics of a typical solar event are shown in Figure 12-12, together with related data on the severity and duration of prior solar events. Minimum aluminum shielding thickness requirements are provided.

Once a solar flare is observed, a 20 to 30 minute delay occurs in particle propagation before an increase in the background energy level is detected. From the onset of increased radiation, the maximum flux level may be attained within 15 minutes to a few hours according to J. Wilson et al (NASA TND 8290, 1976). However, recent communication with G. Heckman at the Boulder NOAA, Space Environment Laboratory indicates that maximum flux rise time occurs less rapidly, from 2 to 100 hours. The corresponding time delay for the first particle to arrive is about 1/3 to 1/2 of the time to reach peak intensity. The peak intensity, in turn, may last only intermittently or for a few hours and the subsequent decay period may be over in a matter of hours or days. Data

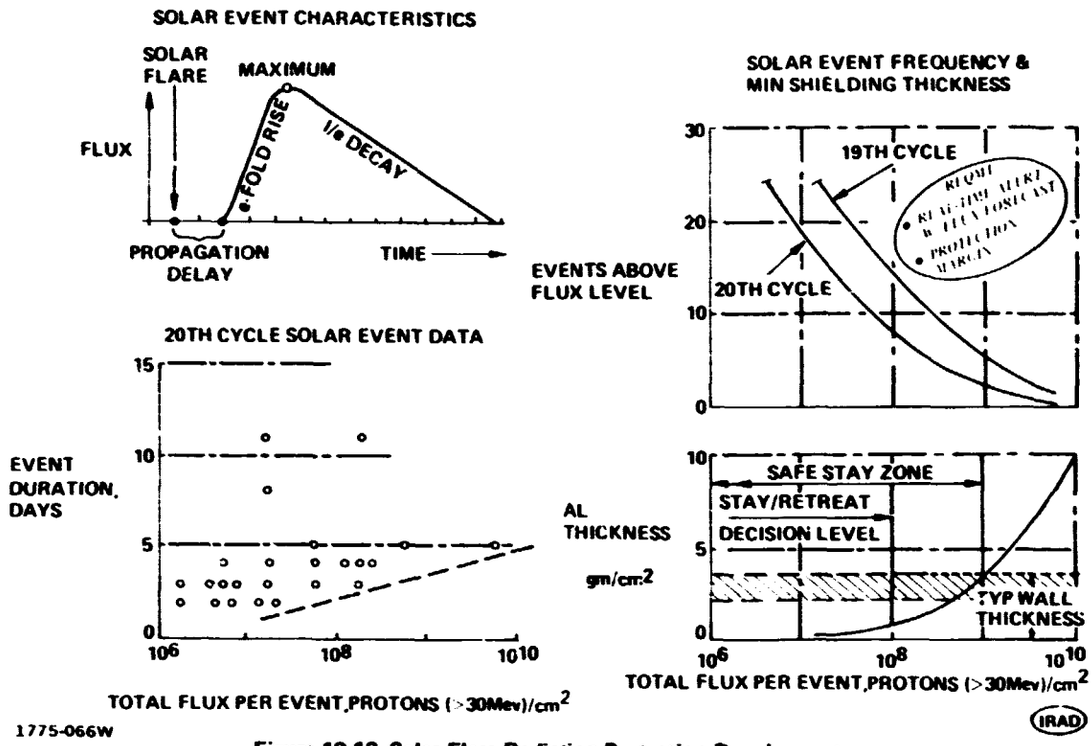

Figure 12-12 Solar Flare Radiation Protection Requirements

from the 20th solar cycle shows that the highest energy event recorded lasted for five days and that a few lower energy events lasted 10 days. Hence, the radiation storm shelter must be able to support the crew life support functions for several days.

In the upper right part of Figure 12-12, the frequency of solar events is plotted as a function of the severity of the event (protons/cm^2). Smoothed historical data are shown for the two most recent solar cycles. Cycle 21 is now underway and resembles cycle 19 rather than cycle 20. The lower right-hand part of the figure shows the cabin wall thickness necessary to protect against this range of event sizes. A typical cabin wall thickness needed for shielding trapped electrons in GEO is also shown at 2.6 to 4 gm/cm^2 (i.e. 1.0 to 1.5 cm of aluminum). A 4 gm/cm^2 shield gives protection for any event up to 1 x 10^9 p/cm^2 flux, however, a minimum thickness of 10 gm/cm^2 is needed for a major solar event (Aug 1972) provided the crew is also equipped with personal shielding for the eyes and testes during peak exposure. Development of a real time solar flare alert system with flux forecast is needed. If the alert system can be triggered at predetermined energy levels below the nominal wall radiation protection level, then a built-in margin for error in forecasting accuracy could be achieved.

2.2.2.4 SPS GEO Base Radiation Design Considerations - The allowable crew dose for the SPS GEO construction base remains to be established. Total accumulated dose limits are required for the entire mission profile, that is, time in LEO, LEO/GEO transit and the GEO base. How much margin should be provided for unscheduled exposure and whether the astronaut allowed radiation levels are applicable to SPS are areas for further study, as indicated in Figure 12-13.

Protection against trapped electron flux in geosynchronous orbit must be factored in all aspects of GEO base operations and design, which include IVA assignments in remote work stations, free fliers, crew buses and crew habitation modules. A multilayered cabin wall of 2.6 gm/cm^2 aluminum equivalent is recommended for the crew module as shown in the figure. The other IVA crew stations could be designed with lighter shielding provided that the total allowable dose is not exceeded. In addition, if EVA operations are needed they should be conducted near local midnight to minimize normal belt radiation exposure. However, EVA should be avoided during large scale fluctuations due to geomagnetic disturbances. The present SPS suit must be upgraded to provide added protection for GEO EVA (i.e., between 1.5 and 4 mm equivalent aluminum.)

Protection against solar flares requires an adequate flare alert warning system that will allow all GEO base workers on remote IVA or EVA assignments to retreat to the nearest storm shelter. Means for protecting stranded workers at these remote locations need to be considered together with the systems required to implement their rescue. The storm shelter is provided with 20 gm/cm^2 of multilayered aluminum equivalent thickness. Additional shielding benefits can be attained by placing internal equipment arrangements against the outer wall.

Protection against high energy heavy ions (HZE) requires further study. Although the dose from these HZE particles is small it is important because of possible biological effects.

2.3 BASE/SATELLITE CONSTRUCTION ATTITUDE

During the 6 month construction cycle, the GEO base will undergo a significant increase in mass and/or a significant shift in center of pressure and center of gravity, as shown in Figure 12-14. Hence, the flight attitude selected for the GEO base is impacted by SPS construction requirements and the orbital mechanics environment.

Figure 12-15 lists the major requirements that must be considered when selecting the GEO base/satellite construction attitude. Only two of the nine requirements listed

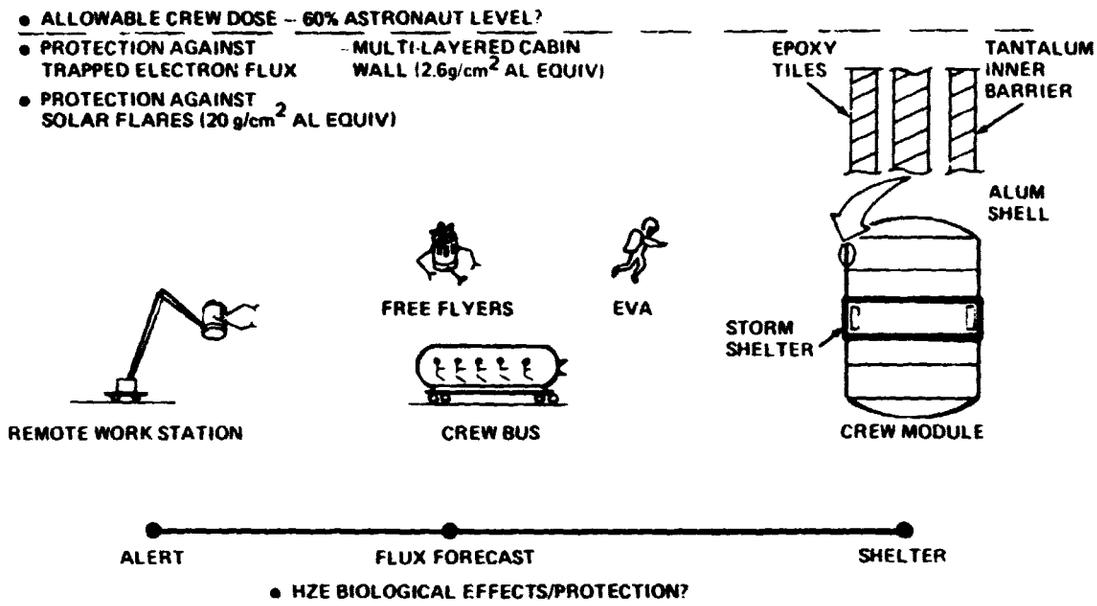

1775-067W

Figure 12-13 SPS GEO Base Radition Design Considerations

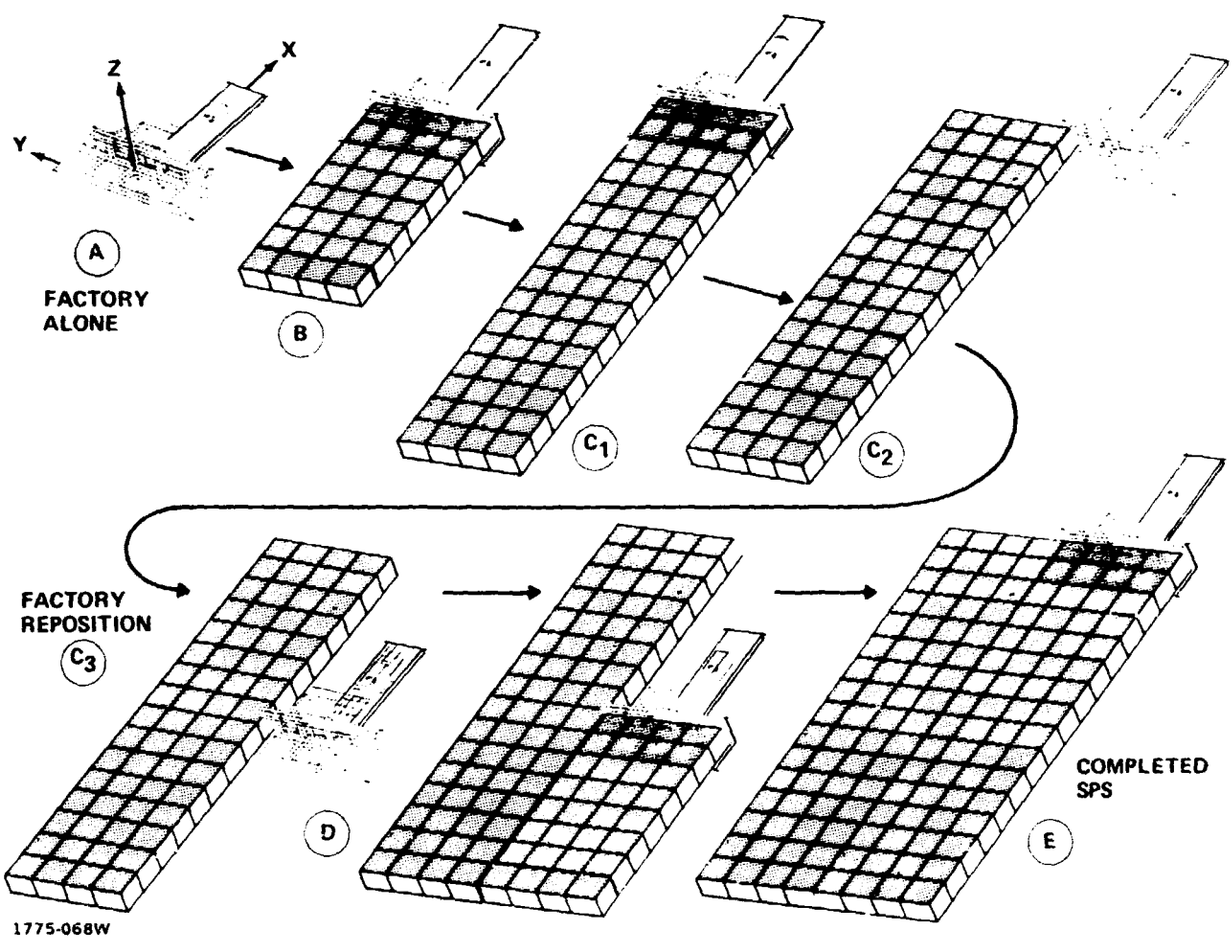

1775-068W

Figure 12-14 SPS Construction Phases

- BASE ATTITUDE CONTROL (GRAVITY & SOLAR PRESS TORQUE)
- √ SUN ANGLE – CONSTRUCTION LIGHTING
  – SPS SOLAR ARRAY DEPLOYMENT
  – BASE SOLAR ARRAY
- SPS OPERATIONAL ATTITUDE
- BASE MANEUVERS TO NEXT CONSTRUCTION SITE
- BASE STABILITY FOR DOCKING
- √ EOTV UNLOADING LOCATION
- COMMUNICATION ANTENNA LOCATION
- STRUCTURAL LOADING
- ORBITKEEPING

1775-069W

Figure 12-15 Base Satellite Construction Attitude Requirements

appear to be significant when selecting the most desirable orbital attitude for the GEO Base. These are sun angle and EOTV unloading location, which are discussed further below.

Previouse SPS studies by Grumman for ECON have shown that the propulsion system penalty for attitude control in GEO is small. The structural loading due to mass offset during construction appears lower than baseline design limits. Since maneuver capability is required for the base, SPS operational attitude and orbitkeeping do not affect construction attitude. Base stability for docking presents no problem since the GEO orbital rate is low. Location of communication antennas does not constrain attitude, as they can easily be located on the base open structure once other attitude requirements are imposed.

2.3.1 Candidate GEO Construction Attitudes

If the SPS solar arrays are deployed in sunlight, high voltage is generated as the solar arrays are exposed to sunlight. Shorting cables could be used to terminate the solar array output, however, the method of handling these and the safety issues involved require study. Another approach to solving the problem is to orient the active side of the solar array away from the sun. This issue also affects maintenance on an operational SPS.

Two GEO base construction attitudes, shown in Figure 12-16, can provide the off-sun attitude during construction and then revert to on-sun attitude for final checkout and separation. The SPS solar arrays can be positioned with its longitudinal axis perpendicular to the orbit plane (POP), as the operational SPS, or be positioned in an

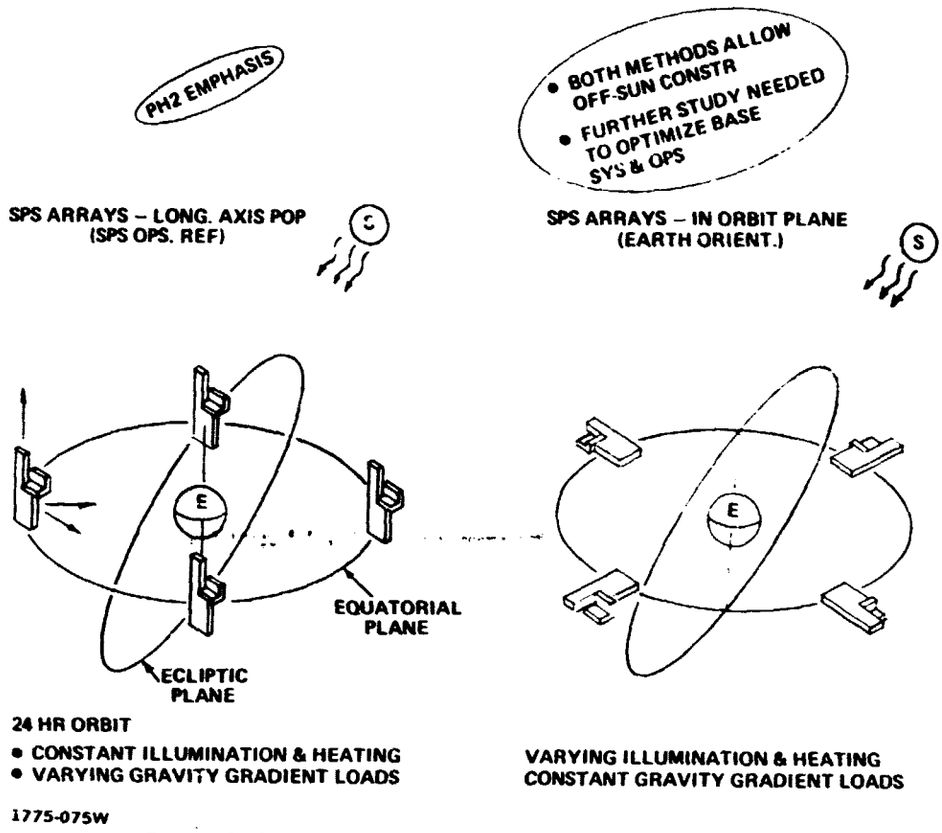

Figure 12-16 Candidate GEO Base/SPS Construction Attitudes

earth pointed mode. Both attitudes minimize light impingement during construction and rely on longitudinal roll maneuvers to acquire on-sun conditions. Other variations of the two attitudes shown opposite do not appear to offer any advantage.

2.3.2 Sun Illumination on Base/SPS

The direction of sun illumination affects crew visibility during daily operations and placement of solar arrays on the Base.

The crew should not face the sun during construction or docking operations. Over-the-shoulder illumination is best. Construction operations require at least 2 MW of electrical power. Fixed solar arrays are less complicated than gimbal type.

The left-hand illustration in Figure 12-17 shows the Base/SPS inertial reference to sun, simplifying the selected location of fixed solar arrays, docking approach and construction illumination constraints. The right-hand illustration shows a more complex illumination situation as the sunlight direction varies on the gravity-reference Base/SPS. These factors are pertinent to the selection of the GEO Base construction attitude.

2.3.3 EOTV Cargo Unloading Considerations

EOTV cargo unloading and transfer to the GEO base occurs while the 1.5 Km X 1 Km inertially oriented EOTV station keeps 1 Km away.

The EOTV location as it stationkeeps with the Base affects the flight path of Cargo Tugs (CT) as they unload the EOTV, the distance the CTs must travel to docking ports, and EOTV stationkeeping propulsion requirements. If the EOTV is not in the same orbital path as the GEO base then propulsion requirements are increased. Ideally, the EOTV should be located alongside of the dock ports at minimum distance consistent with safety requirements. Attitude requirements of the Base and EOTV and orbital mechanics may dictate a changing relationship between these two vehicles in GEO orbit and separation distances greater than 1 km.

The baseline operational attitude for the SPS is a candidate for construction operations. The illustration in Figure 12-18 shows this attitude with the EOTV stationkeeping during a 24 hour period. Both spacecraft are in the same orbital path with their solar arrays perpendicular to the sun. Note that the change in relative attitudes of the two vehicles during an orbit makes it appear that the EOTV is circling the Base/SPS. If this is the operating condition, then the two vehicles are separated by approximately 4 km at times and the CT flight paths are continually changing - an obvious impact on CT propulsion and control requirements. One solution is to maneuver between the two vehicles only when they are in the most favorable geometric location.

If the Base is earth gravity stabilized as shown, then the relative location of the Base and the EOTV remains fixed. The EOTV, however, rotates 360° every 24 hours with respect to the Base. Hence, CT flight paths will also be constrained to the most favorable geometric arrangement.

2.3.4 GEO Base Flight Control Requirements

Figure 12-19 lists the basic requirements for the GEO base flight control system. The POP mode was emphasized for the SPS off-sun solar array construction requirements during the Phase 2 effort, since previous SPS feasibility studies show low propellant requirements for all GEO flight attitudes. The POP attitude permits base solar arrays to be fixed on the structure and also allows construction operations to be conducted under constant lighting and solar heating conditions. Further study is recommended on other flight attitudes, including the impact on base logistic operations, satellite construction constraints and base power design penalties.

The major environmental disturbances to be considered for attitude control and station keeping functions are also listed in Figure 12-19.

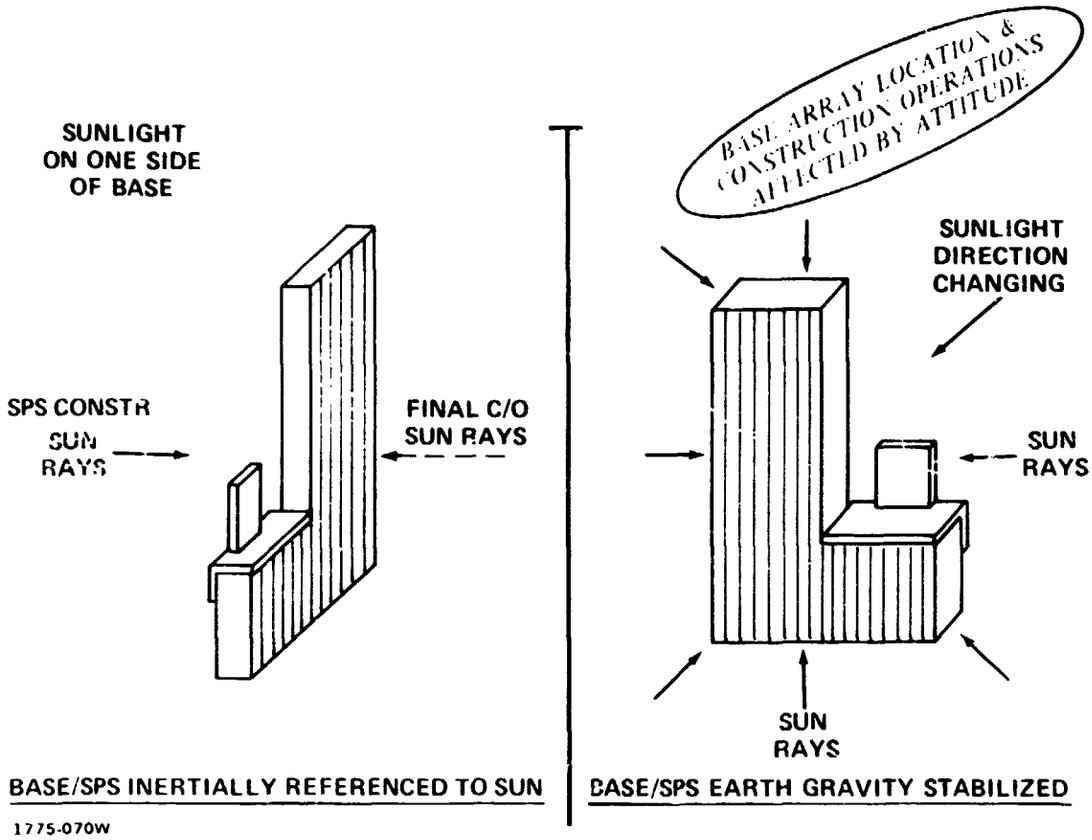

Figure 12-17 Sun Illumination on Base/SPS

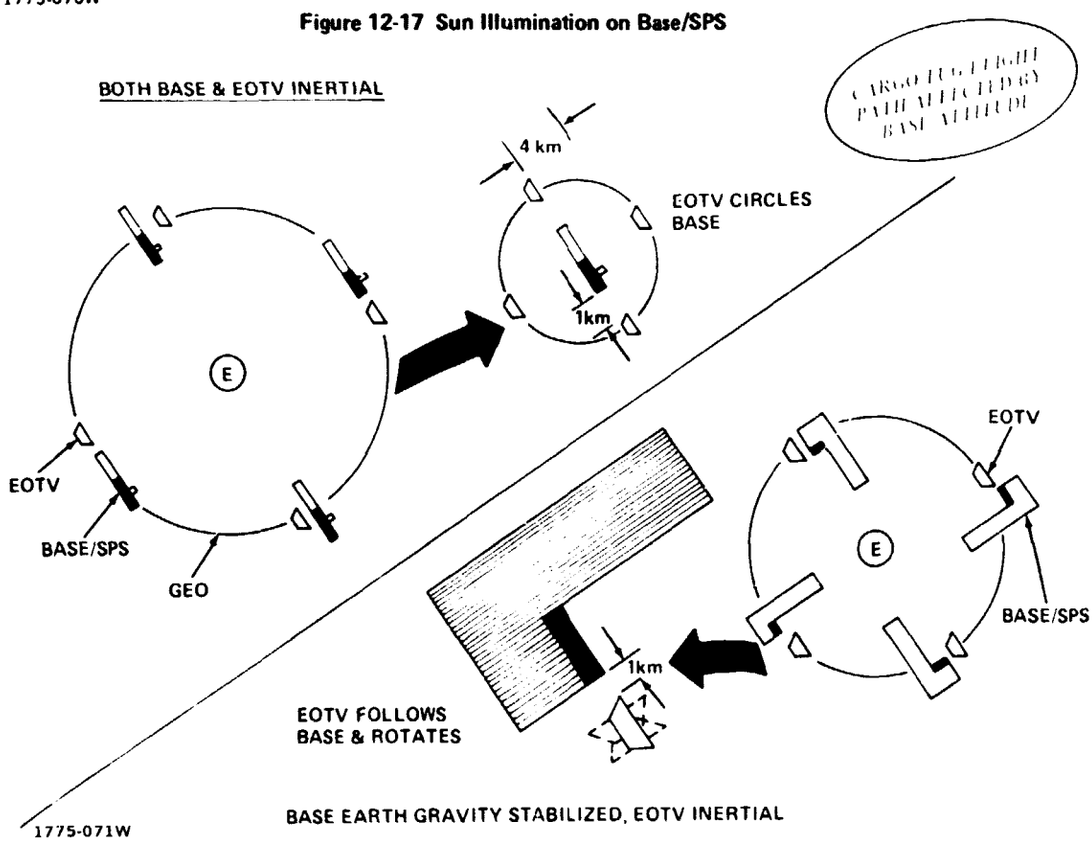

Figure 12-18 EOTV Cargo Unloading Considerations

REQUIREMENTS

- CONSTRUCT SPS ARRAYS OFF-SUN (POP)
- FINAL SPS C/O IN POP ATTITUDE (ON-SUN)
- MAINTAIN SPS/BASE AT DESIRED ORBITAL POSITION WITHIN ± 1
- SEPARATE SPS/BASE AT DESIRED GEO LONGITUDE (I.E. 90°W TO 150°W)
- TRANSFER BASE TO NEXT ORBITAL CONSTRUCTION SITE (~ 10°)
- PROVIDE BASE ONLY THRUSTER CONTROL

ENVIRONMENTAL DISTURBANCES

- ATTITUDE CONTROL FORCES
  - GRAVITY GRADIENT
  - SOLAR PRESSURE
- STATIONKEEPING FORCES
  - SUN & MOON GRAVITATIONAL INFLUENCE
  - SOLAR PRESSURE
  - ELLIPTICITY OF EARTH EQUATORIAL PLANE

1775-072W

Figure 12-19 GEO Base Flight Control Requirements & Environmental Disturbances

SATELLITE CONSTRUCTION OPERATIONS

The 5000 MW reference solar power satellite is to be constructed entirely in GEO and is to be fully assembled in 6 months. The reference satellite has a single antenna located at one end of a large photovoltaic energy conversion system as shown in Figure 12-20. The 8 x 16 bay energy conversion system features a hexahedral braced structure, longitudinal solar array blanket installation and multiple power buses. The satellite construction approach includes the 2 pass longitudinal buildup of the energy conversion system as depicted in Figure 12-21 and the 16 row lateral buildup of the power transmission antenna as defined in Boeing's Phase I final report (Volume III, D180-25037-3). The GEO construction operation is to rely upon normal IVA assembly methods. A broad range of technology issues (many of which are beyond the scope of this study) must be addressed to cover all aspects of the SPS construction process. As the reference system matures, the satellite construction approach must be reexamined for the energy conversion, power transmission and interface systems. In addition the structural assembly methods should be well understood to the level of beam fabrication, handling and joining. Techniques for installing the major subsystems (i.e., solar arrays, buses and subarrays) must be further developed and the requirements for construction equipments need further refinement. In addition, the structural dynamic, thermodynamic and control interactions between the base and the satellite should be investigated and defined. Other areas to be examined include methods for berthing or mating of large system elements, techniques for in-process inspection and repair, and concepts for implementing satellite final test and checkout.

The following subsections define general construction approach and the methods used to assemble, mate and checkout the satellite energy conversion system, power transmission system and interface system elements.

3.1 GENERAL CONSTRUCTION APPROACH

The GEO base structure supports the emerging satellite during all phases of construction. The SPS energy conversion system is assembled during two successive passes by the L-shaped framework shown in Figure 12-22. The width of this framework (3.44 km) encompasses a 5-bay segment of the energy conversion structure to provide a one bay overlap for lateral and longitudinal indexing operations. The 700 m high

- ASSEMBLE BASELINE 5 GW SATELLITE IN 6 MONTHS

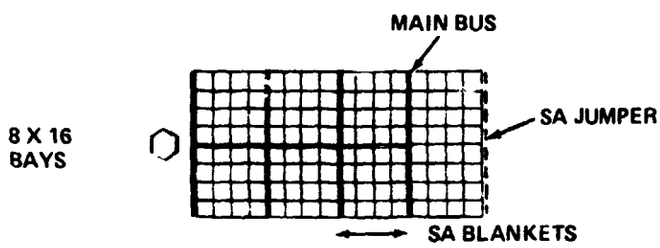

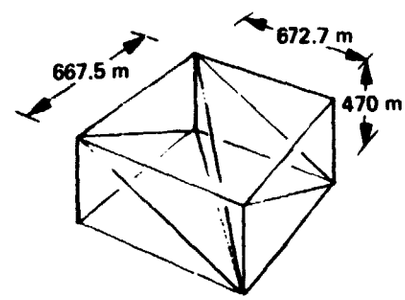

- 4 BAY END BUILDER (PH-1, REF S/S DESC D180-25037-3)
  - 2 PASS LONG. ENERGY CONV ASSY
  - 11 ROW LATERAL ANTENNA ASSY
- IVA ASSEMBLY METHODS - EVA EMERGENCY LIMITED
- SPS CONSTRUCTION ISSUES
  - SATELLITE CONSTRUCTION APPROACH
  - STRUCTURAL ASSEMBLY METHODS
  - SUBSYSTEM INSTALLATION TECHNIQUES
  - CONSTRUCTION EQUIPMENT REQMTS
  - SATELLITE SUPPORT & BASE INTERACTIONS
  - HANDLING & MATING LARGE SYSTEM ELEMENTS
  - IN PROCESS INSPECTION & REPAIR
  - FINAL TEST & CHECKOUT

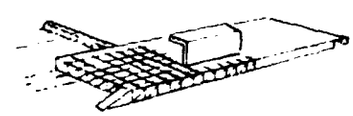

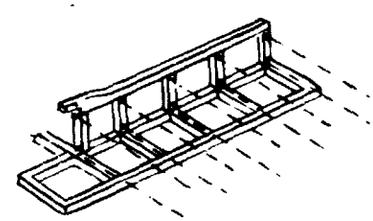

1775-1

Figure 12-20 SPS Phase 2 Construction Requirements & Issues

REPRODUCIBILITY OF THE ORIGINAL PAGE IS POOR

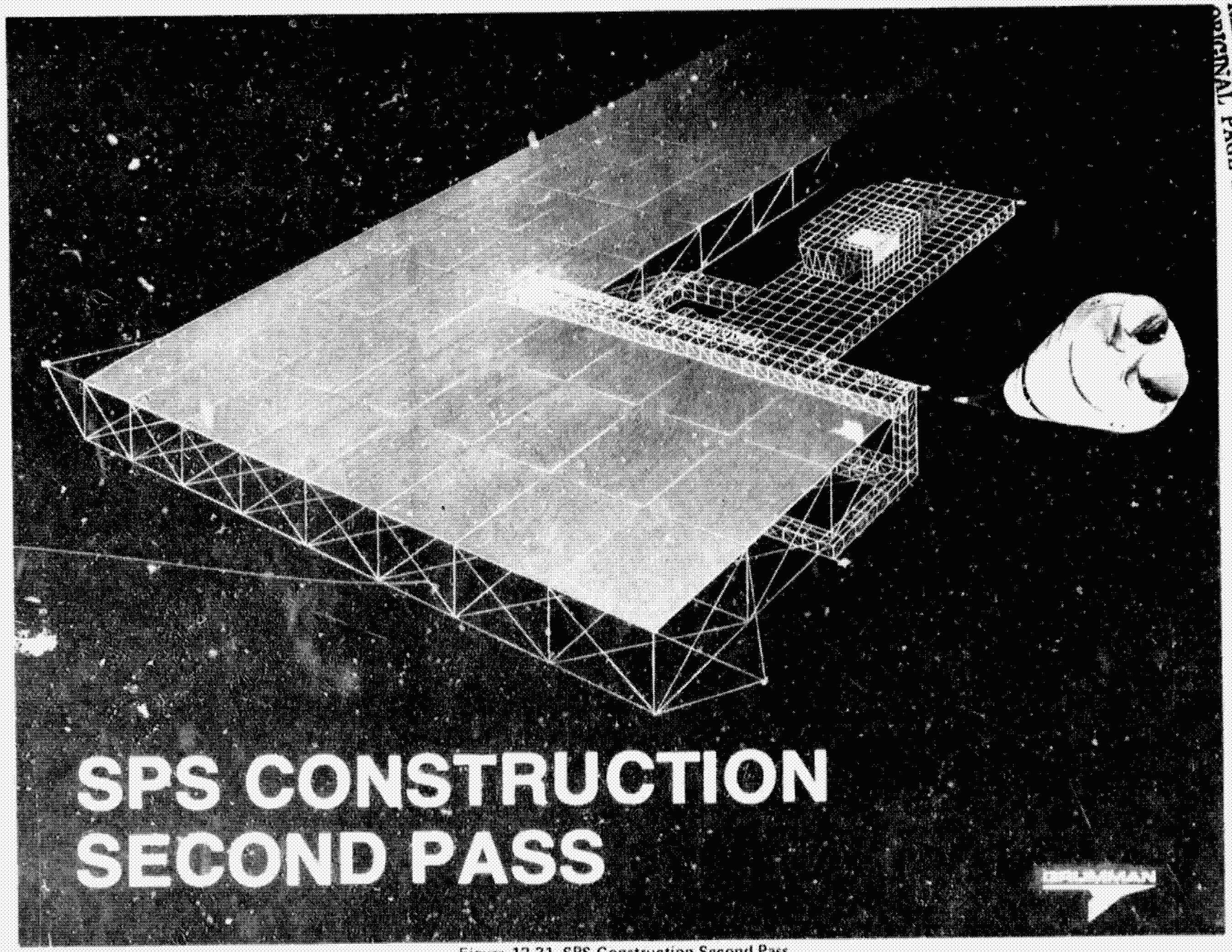

Figure 12-21 SPS Construction Second Pass

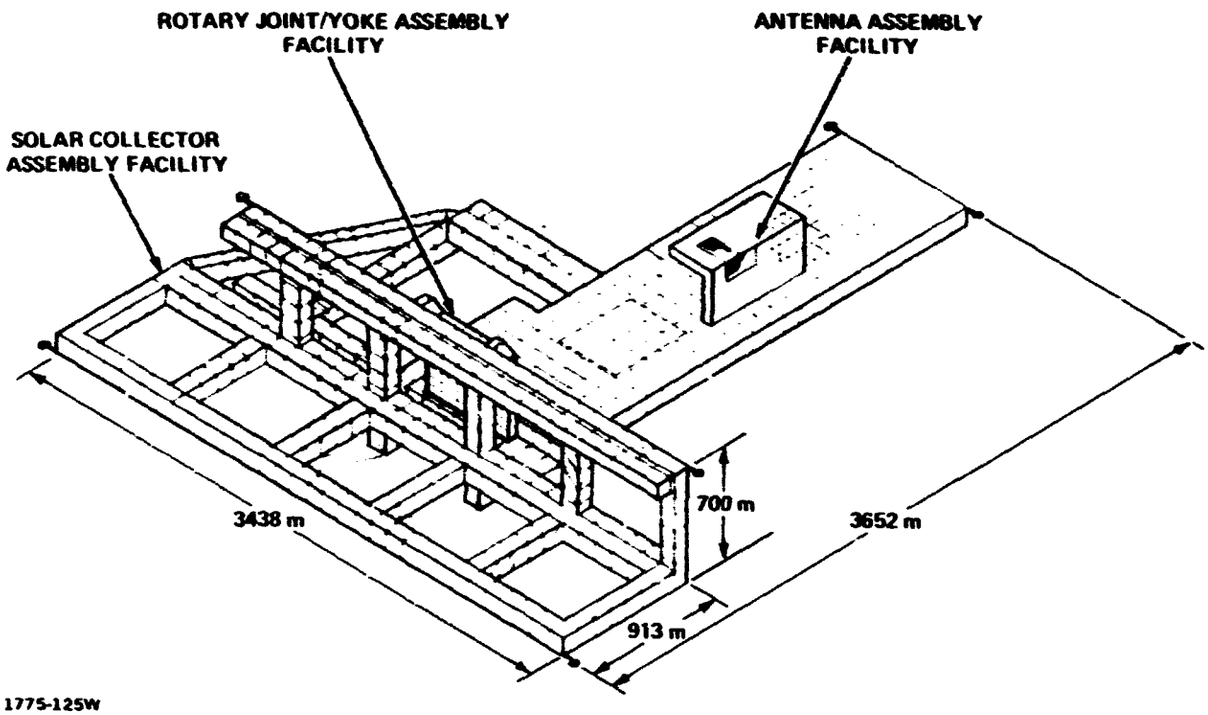

Figure 12-22 4 Bay End Builder Construction Base – Update

open truss structure houses beam fabrication stations, solar blanket installation equipment, bus installation mechanisms, crew facilities, docking, storage, intra-base transport, etc. The other leg of the facility (913 m long) guides and supports the satellite until all systems are mated and checked out. The antenna assembly platform, which is located at the rear of the base, is arranged to facilitate the construction and attachment of the antenna and rotary joint interface. This open truss platform (2.74 km x 1.65 km) also supports the antenna/yoke assembly during the final lateral index and mating operations with the assembled 8 x 16 bay energy conversion system. The framework provided for the rotary joint/yoke assembly facility and antenna assembly facility is sufficient to house the required construction equipment as shown in Figure 12-23.

3.1.1 Construction Analysis Emphasis

Once the GEO base is built and operating in orbit, the construction of Solar Power Satellites will become its primary mission function. Each satellite is constructed and placed in the required orbital location by the GEO base. Hence, after each construction cycle the base transfers to another orbital site where it builds the next SPS. The base will also support operational satellite maintenance, when needed.

During Phase 2, SPS construction operations were analyzed from the top down, by defining the required steps at each level of the construction sequence. Figure 12-24 shows the top level operations of the GEO base and a first level breakdown of the construction operations flow. Construction of the reference satellite system includes parallel assembly of energy conversion, power transmission and interface elements. When these system elements are fully assembled, they are mated and integrated to form the complete solar power satellite. The construction cycle ends with final test and check out of SPS systems.

Similar construction techniques are used to assemble the three major SPS elements. Thus, during Phase 2 the energy conversion system has been analyzed to a greater depth to ensure that key technology issues are identified.

3.1.2 4 Bay End Builder Timeline

SPS assembly operations commence with the construction of the energy conversion system, as shown in Figure 12-25. Assembly of the energy conversion system is timed for simultaneous completion and mating with the interface system and power transmission system. The 5GW monolithic satellite is constructed and checked out in GEO in six months.

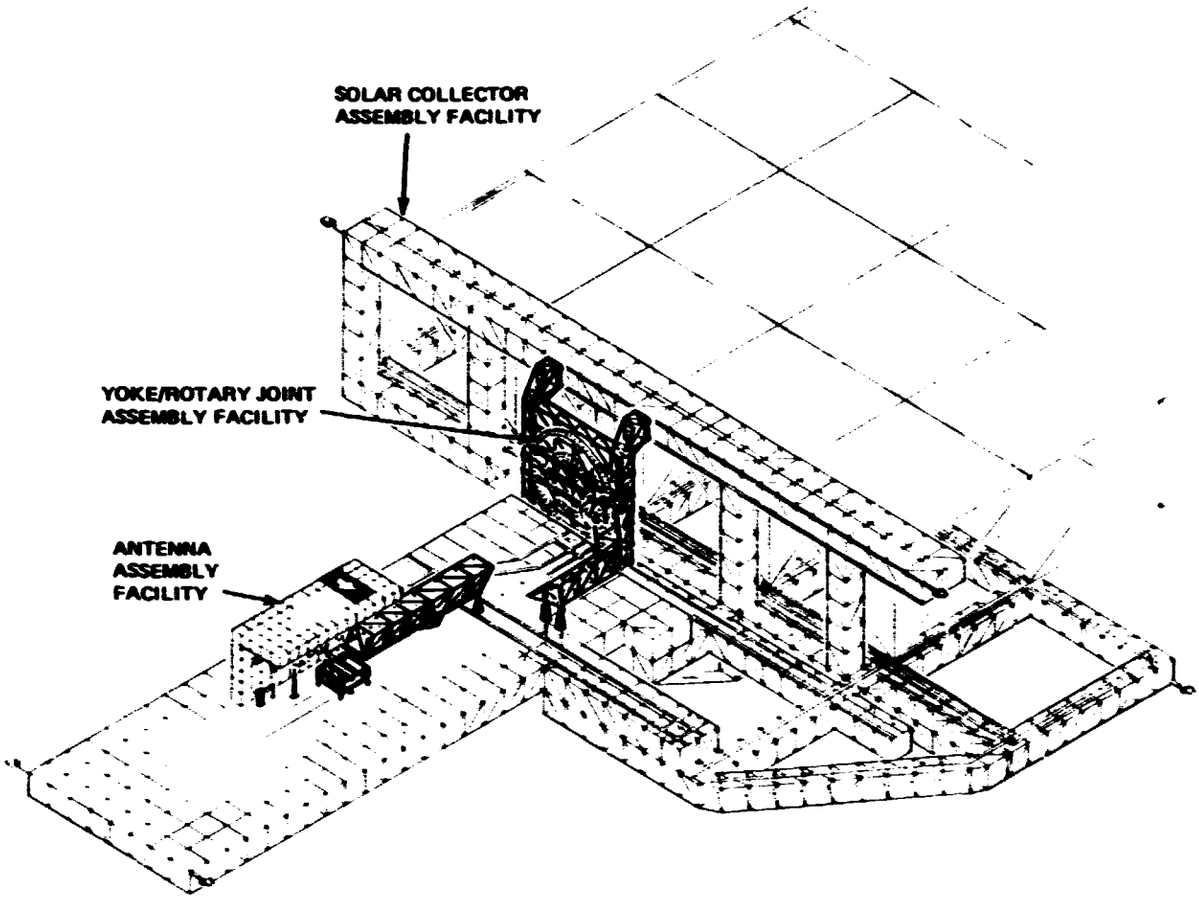

1775-126W

Figure 12-23 4 Bay End Builder – Initial Construction

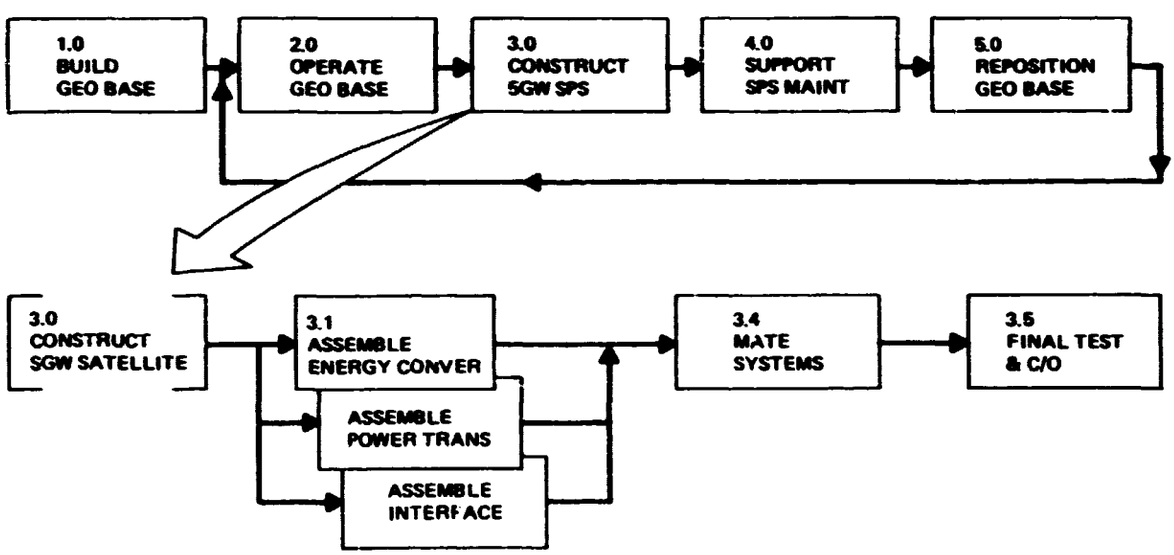

1775-120W

Figure 12-24 4 Bay End Builder Operations Flow

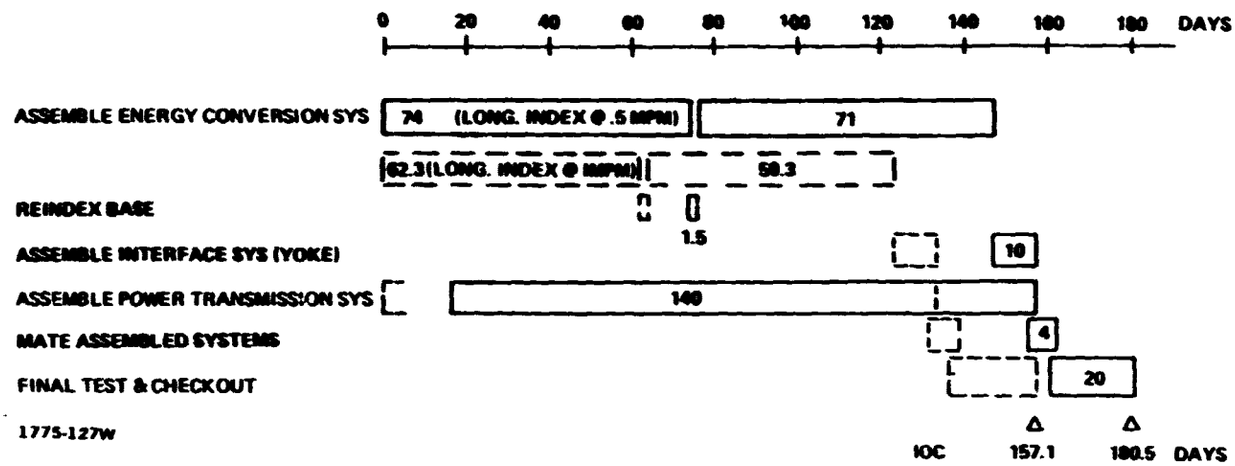

Figure 12-25 4 Bay End Builder Timeline

The 4 bay end builder uses two passes to construct the 8 x 16 bay energy conversion system; each pass provides a 4 x 16 bay module which contains the appropriate subsystems (i.e., structure, solar blanket; power distribution and control, attitude control, etc.). The main power bus is installed during the first pass in parallel with the fabrication of continuous longitudinal beams. The second construction pass is somewhat shorter since one side of the structure is already built, and therefore less vertical and diagonal support beams are required. The energy conversion assembly process can be accelerated, if necessary, by increasing the rate of continuous longitudinal beam fabrication.

The interface system is constructed separately and then joined to the power transmission system. The satellite is fully assembled, when these systems are mated with the energy conversion system.

The overall construction sequence is illustrated in Figure 12-26.

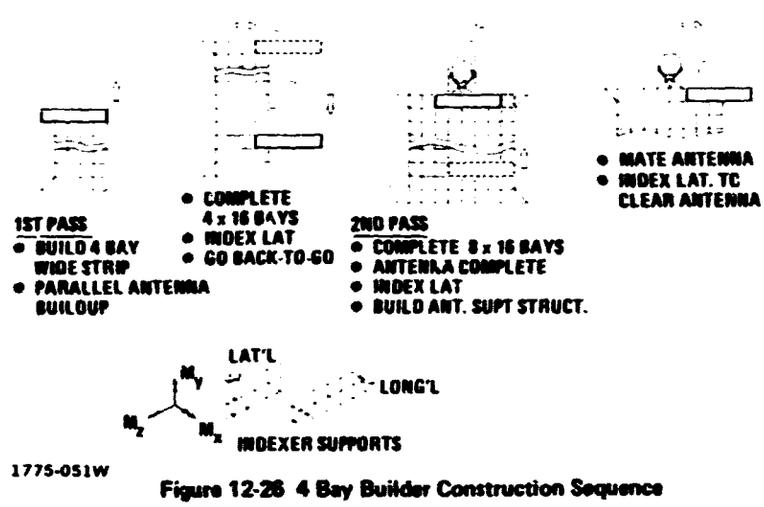

Figure 12-26 4 Bay Builder Construction Sequence

3.1.3 Ground Rules & Assumptions

The Phase 2 SPS construction analysis is keyed to the 5GW reference satellite concept (i.e. silicon solar cells and a concentration ratio of 1.0) as defined by Boeing's Phase 1 SPS Reference System Description Document (D180-25037-3). The following list of ground rules and assumptions was developed during Phase 1 and expanded during the Phase 2 analysis of energy conversion system assembly operations:

- Construction of the Solar Power Satellite is to be accomplished at GEO
- Assemble one 5GW satellite in 180 days ± 5%
- Free-flying assembly or construction equipment is to be avoided
- EVA construction tasks should not be required, except for infrequent maintenance and inspection tasks
- The energy conversion system structure is to be composed of a repeating hexahedral truss arrangement 8 bays wide and 16 bays long. These bays are 667.5 m wide and 672.7 m long, giving a 5.4 km x 10.8 km structure, when completed.
- A 4-bay end builder construction facility is to be used to construct the energy conversion system structure in two passes. Each pass through the end builder produces a 4 x 16 bay structural module.
- The end builder construction base concept relys upon semi-stationary beam machines in synchronous operation to produce continuous longitudinal members (10,776 m) for the energy conversion system
- Mobile beam builders operating autonomously are to be used to produce the various lateral, vertical and diagonal beams as needed to complete the structure in each bay
- Structural beam segments are to be transported and installed by two cherry pickers, one at each end. These cherry pickers are:
  - controlled by one operator in the MRWS
  - self propelled by onboard power supply
  - Operated from a rail track system on the energy conversion system construction facility.
- Construction operations will be performed during 2 ten hour shifts per day and at 75% efficiency

- Concurrent with the construction of the energy conversion system structure, other non-structural elements of the energy conversion system are to be assembled and installed as follows:
  - Solar Array
  - Power Distribution
  - Attitude Control
  - Other Subsystems.
- The solar array blankets will be attached to 12.7 m upper lateral beams and will be deployed longitudinally concurrent with the fabrication of the longitudinal beams
- The GEO construction base interfaces with the energy conversion system structure via indexing/support machines that provide the capability to index in lateral and longitudinal directions. Those indexers are:
  - Mobile towers with mechanisms for attachment to hard points on the energy conversion system structure.
  - Self powered with onboard power supply
  - Remotely controlled/monitored from base command & control center and can be slaved
  - Operated from a rail track system on the energy conversion system construction facility.
- Construction equipment rates ranging from 0.5 to 20 mpm, shown in Table 12-2, are assumed to be reasonable. Low equipment utilization should be avoided.
- All construction equipment is modularized for ease of maintenance
- Forty-four solar array blankets, 14.9 m wide and 660 m long, will be installed in each structural bay.
- The blankets will be deployed longitudinally between the 12.7m lateral beams and electrically connected to interbay jumpers, jumper buses and acquisition buses, as required to, assemble 8 blanket strings.
- The interbay jumpers, jumper buses and acquisition buses are automatically mounted on the 12.7 m upper lateral beams as an integral part of the beam fabrication process.

TABLE 12-2 EQUIPMENT OPERATING TIMES & RATES

BEAM BUILDER SUBSTATIONS	
• AIM BEAM MACHINE – ROTATE IN YAW 90° – ELEVATE 45° OR 90°	5 min
• AVERAGE BEAM FABRICATION RATE	
– LONGITUDINAL BEAMS	0.5 m/min
– LATERAL, VERTICAL, OR DIAGONAL BEAMS	5 m/min
• INSTALL END FITTINGS	10 min
• HANDOFF	5 min
• TRAVEL	20 m/min
CHERRY PICKERS	
• INSTALL BEAM	10 min
• TRAVEL	50 m/min
INDEXER/SUPPORT	
• ATTACH	10 m/min
• INDEX/TRAVEL	10 m/min
• SUPPORT/TRAVEL	AS REQUIRED
BUS DISPENSING STATION	
• TRAVEL	AS REQUIRED
• BUS DISPENSING RATE	@ LEAST 5 m/min

1775-122W

- Prior to installation operations, solar array blankets will be inspected and checked out at storage locations.
- A unmanned transporter will be used to deliver the blanket containers to the appropriate installation locations.
- A pair of cherry pickers, performing coordinated activities, is required for the installation of a solar array blanket.
- A total of 4 cherry pickers is allocated for installing the blankets and assembling the blanket strings.
- A breaking capability must be provided, which will allow the simultaneous longitudinal beam fabrication/solar array deployment to stop when required, without detrimental effects on the solar array blankets.
- The satellite structure is to be divorced from the cumulative affect of the thermal variations of the power distribution buses.
- The natural frequency of the power distribution buses is to be greater than that of the satellite.
- Major satellite elements are to be supported by the base during all phases of construction
- The indexers should be located as far from each other as possible, to enhance stability.
- Indexer supports are to be attached to the satellite structure at nodal points (e.g., space frames on the continuous longitudinal beams at the bottom of the energy conversion system structure).
- The indexers can be independently operated, while traveling about the GEO construction base, but during indexing operations they will be operated under synchronized control.
- SPS quality assurance activities are to be performed concurrent with SPS construction operations
- Automated construction operations are to be continuously monitored and inspected. For example, mechanical attachments will be inspected for structural integrity and electrical connections will be subjected to continuity tests before acceptance

- Satellite inspection will be performed at each level of system build up to assure integrity of construction.

3.1.4 Construction Equipment

Figure 12-27 illustrates typical construction equipment used by the major construction facilities of the GEO base. SPS construction equipment includes automatic machinery for fabricating large structural beams in space. These beam machines build three sided open truss beams from tightly rolled strips of composite material to avoid the higher costs incurred in transporting low density structures to GEO. General purpose manned cherry pickers, provided with dextrous manipulators, are used to assemble these light weight beams and install the required subsystem components in the energy conversion and power transmission systems. During construction, the major elements of the satellite are supported by indexers which can be moved across the base as needed. Additional equipment is also provided to facilitate the deployment of large sheet metal power buses, anchoring solar array blanket containers, and installing antenna systems.

Table 12-3 provides a summary listing of the major equipment types and where they are used on the base.

The solar collector beam builder substations and power bus dispenser station are discussed further below.

3.1.4.1 Energy Conversion Beam Builder Requirements - Four different types of beam builders are required to construct the energy conversion system as shown in Table 12-4. Two types of beam builders are synchronized for continuous longitudinal beam fabrication, while the remaining two beam builders are employed to fabricate lateral, vertical, and diagonal bracing members. The 7.5 m synchronized and 12.7 m autonomous beam builders, which operate at the solar array level, are required to install solar array maintenance track during beam fabrication. The longitudinal beam builders must also be able to install attachment frames for joining other beams. All segmented beams, in turn, must be fabricated with suitable end attachments:

7.5 m Beam Builder Substations - The 7.5 m synchronized substation illustrated in Figure 12-28, includes a beam machine equipped with frame-making features. Frame segment supply canisters are mounted at each beam face at cross member attaching stations. Since current maintenance track concepts call for supports at each cross member, track

TABLE 12-3 CONSTRUCTION EQUIPMENT SUMMARY

ITEM	QTY*				MASS.(10^3 kg)	
	M	A	Y	TE	EA.	SUB TOTAL
WBS 1.2.1.1.2.1 BEAM MACHINES						
• 7.5 m SYNCH TRAVEL	10			10	11	110
• 7.5 m GIM. MOBILE, MANNED	2	2	2	6	15	90
• 12.7 m GIM. MOBILE, MANNED	1			1	21	21
WBS 1.2.1.1.2.2 CHERRY PICKERS						
• 30 m	8		2	10	2.5	25
• 90 m	4	2		6	5	30
• 120 m		2	1	3	7	21
• 250 m		1		1	9	9
WBS 1.2.1.1.2.3 INDEXERS						
• 15-45 m	5			5	1.3	6.5
• 130 m		6	8	14	3.0	42
• 230 m		2		2	5.5	11
WBS 1.2.1.1.2.4 BUS DEPLOYER						
• 90 m (ALSO 80 m)	1	1	1	3	8.0	24
WBS 1.2.1.1.2.5 SOLAR ARRAY DEPLOYMENT EQUIPMENT						
• PROXIMAL ANCHORS	176			176	TBD	TBD
WBS 1.2.1.1.2.6 ANTENNA DEPLOYMENT PLATFORM		1		1	28	28
ADD 10% ALLOWANCE FOR UNDEFINED EQUIPMENT						42
*USED ON M-SOLAR ARRAY SYSTEM A-ANTENNA Y-YOKE & ROTARY JOINT T-TOTAL 1775-121W						

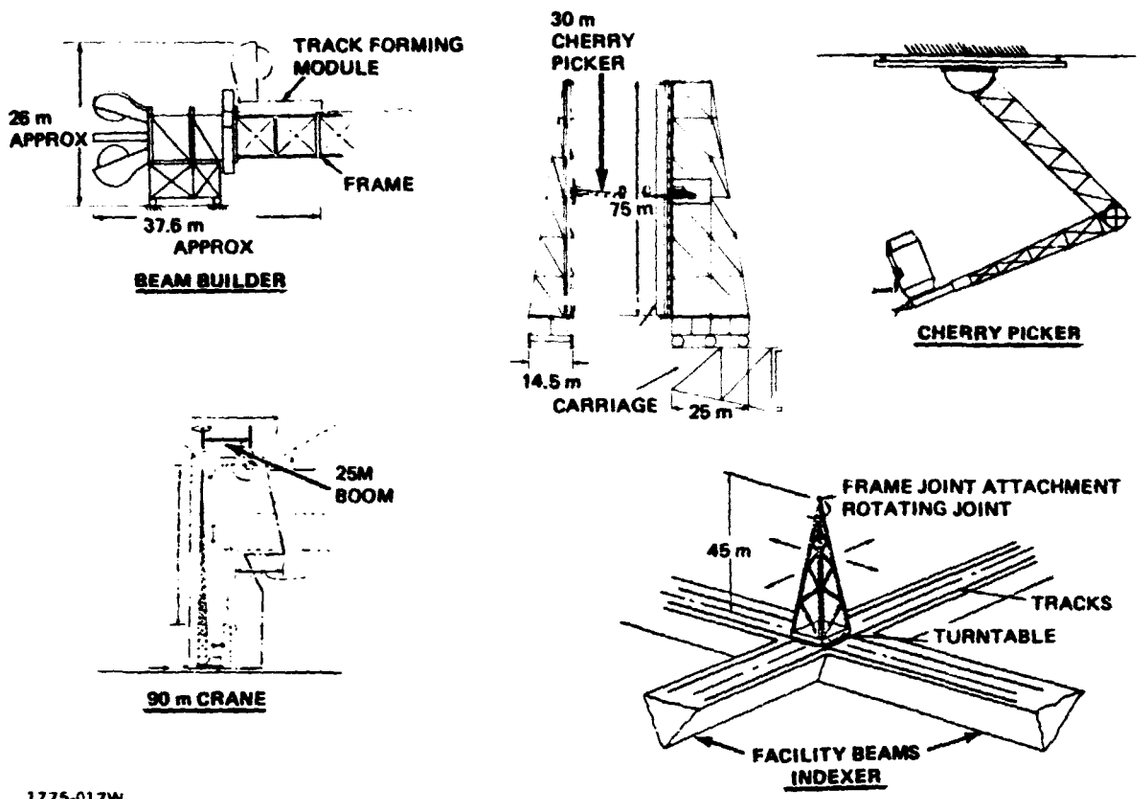

1775-017W

Fig. 12-27 Typical Construction Equipment

TABLE 12-4 ENERGY CONVERSION BEAM BUILDER SUBSTATION REQUIREMENTS

TYPE MACHINE	7.5 m SYNCHRONIZED W TRACK	7.5 m SYNCHRONIZED W/O TRACK	12.7 m AUTONOMOUS W TRACK	7.5 m AUTONOMOUS W/O TRACK
USE	UPPER (SOLAR ARRAY) LONGITUDINALS	LOWER LONG BEAMS	UPPER (SOLAR ARRAY) LATERALS	ALL OTHER BEAMS
FUNCTIONS	• FAB 7.5 m CONTINUOUS BEAM W FRAMES & TRK • NOMINAL FIXED • REMOTE CTL	• FAB 7.5 m CONTINUOUS BEAM W/FRAMES • NOMINAL FIXED • REMOTE CTL	• FAB 12.7 m BEAM W/END FITTINGS & TRACKS • ATTACH ACQ BUS & JUMPERS • MOBILE & GIMBALED • ON BD OPER	• FAB 7.5 m BEAM (VARIOUS LENGTHS) W/END FITTINGS • MOBILE & GIMBALED • ON BD OPER
MACHINES	5	5	1	2
FAB RATE	3.5 m/min	3.5 m/min	5 m/min	5 m min
BEAM MATL CAPACITY	10,800 m	10,800 m	10,700 m	10,200 m
GIMBAL CAPACITY	TBD	TBD	YAW ± 90°	YAW ± 90°PITCH 90
TRAVEL	3.5 m/min	3.5 m/min	20 m/min	20 m/min

1775-123W

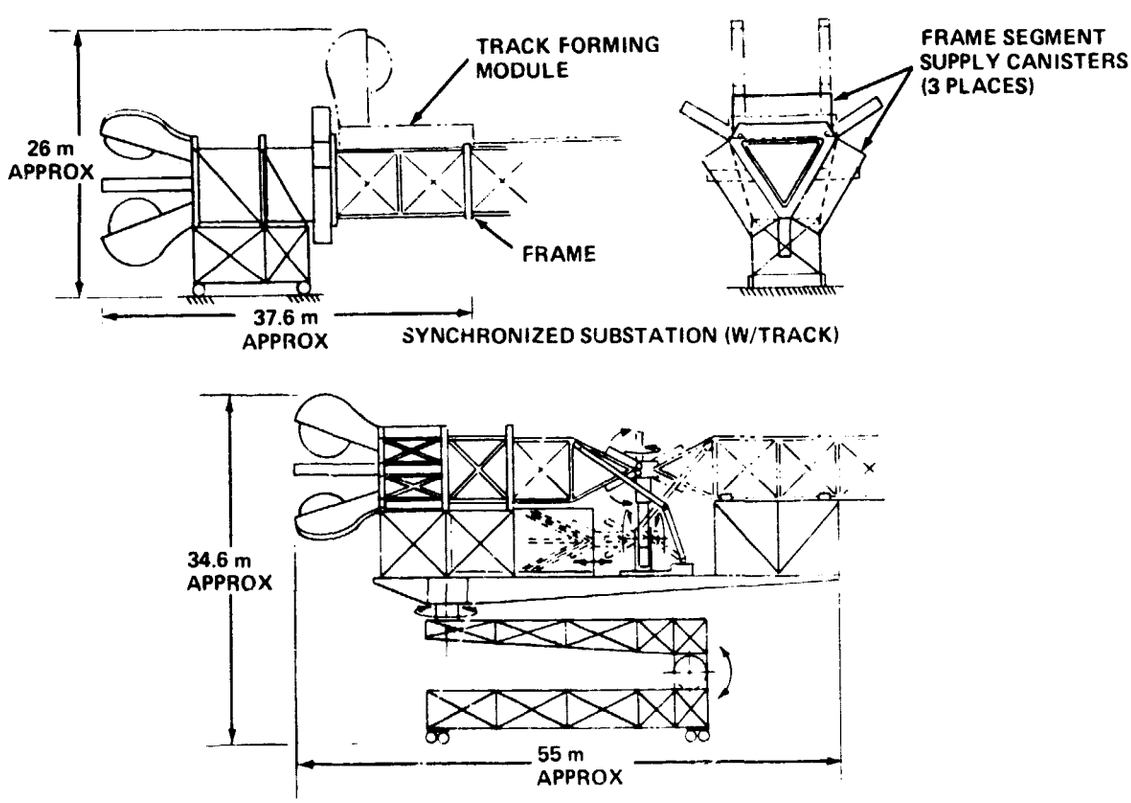

7.5 m MOBILE SUBSTATION

IRAD

1775-128W

Figure 12-28 7.5 m Beam Builder Substations

attachment will occur after the completed cross members emerge from the beam machine. This requirement dictates the location of the track forming module as shown.

The 7.5 m mobile substation illustrated in the lower part of the figure, uses a beam machine provided with end fitting attachment features. A column mounted end fitting support fixture with movable gripping fingers can rotate to place fittings on either end of a beam. The column swings down as required to clear the emerging beam or pick up an end fitting from the supply canister. The grip is capable of extending to secure and withdraw a fitting from the supply canister. An automatic arm attaches the end fittings to the beam on either end as required. An accessory platform is equpped with holding devices which index the completed beam and position it for installation of the end fitting after it has emerged from the beam machine. The entire platform with beam machine and accessories is capable of 360° swiveling and can be rotated perpendicular to the carriage to provide any required orientation.

12.7 m Beam Builder/Acquisition Bus Substation - The 12.7 m beam builder concept shown in Figure 12-29 has multiple functions in addition to the basic beam fabrication:

- The entire sub-station platform can be oriented to direct the fabricated beam as required.
- Maintenance tracks are installed on the top and side of the beam during fabrication.
- An end fitting fixture can take pre-fabbed end fittings from a supply canister and install them on either end of the beam with the aid of the end fitting installer.
- Acquisition and jumper buses are installed during beam fabrication as needed.
- Catenary attach fittings and S/A interbay jumpers are installed during beam fabrication.
- A support platform equipped with indexers holds the beam to maintain alignment during fabrication and end fitting installation and aids in positioning the completed beam.

3.1.4.2 Mobile Power Bus Dispensing Station - The power bus dispensing station, shown in Figure 12-30, dispenses both main and feeder buses and installs the bus support cables. Individual bus strips are supplied by specific supply canisters mounted at the back of the dispensing unit. The support cables are supplied by

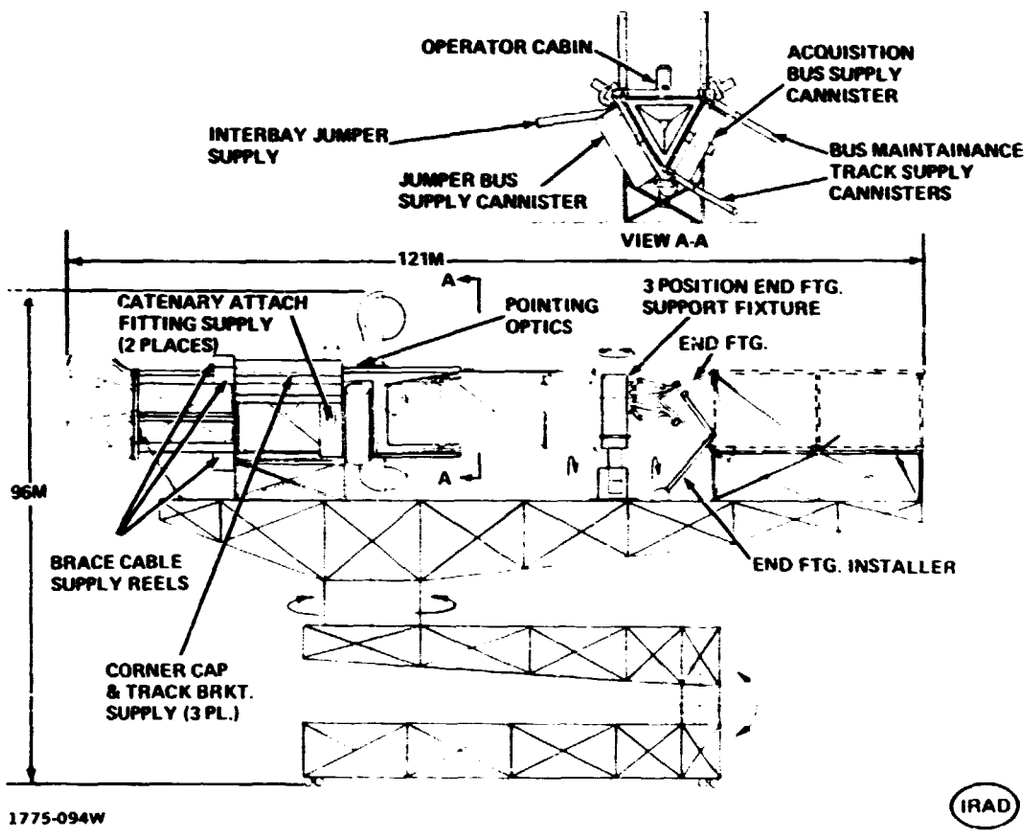

Figure 12-29 12.7 m Beam Builder/Acquisition Bus Substation

REQUIREMENTS

- DISPENSE MAIN & FEEDER BUSES IN SEQUENCE
- CUT AND SPLICE BUS MATERIAL
- INSTALL STIFFENERS & STRONGBACKS
- INSTALL AND PRELOAD CABLES

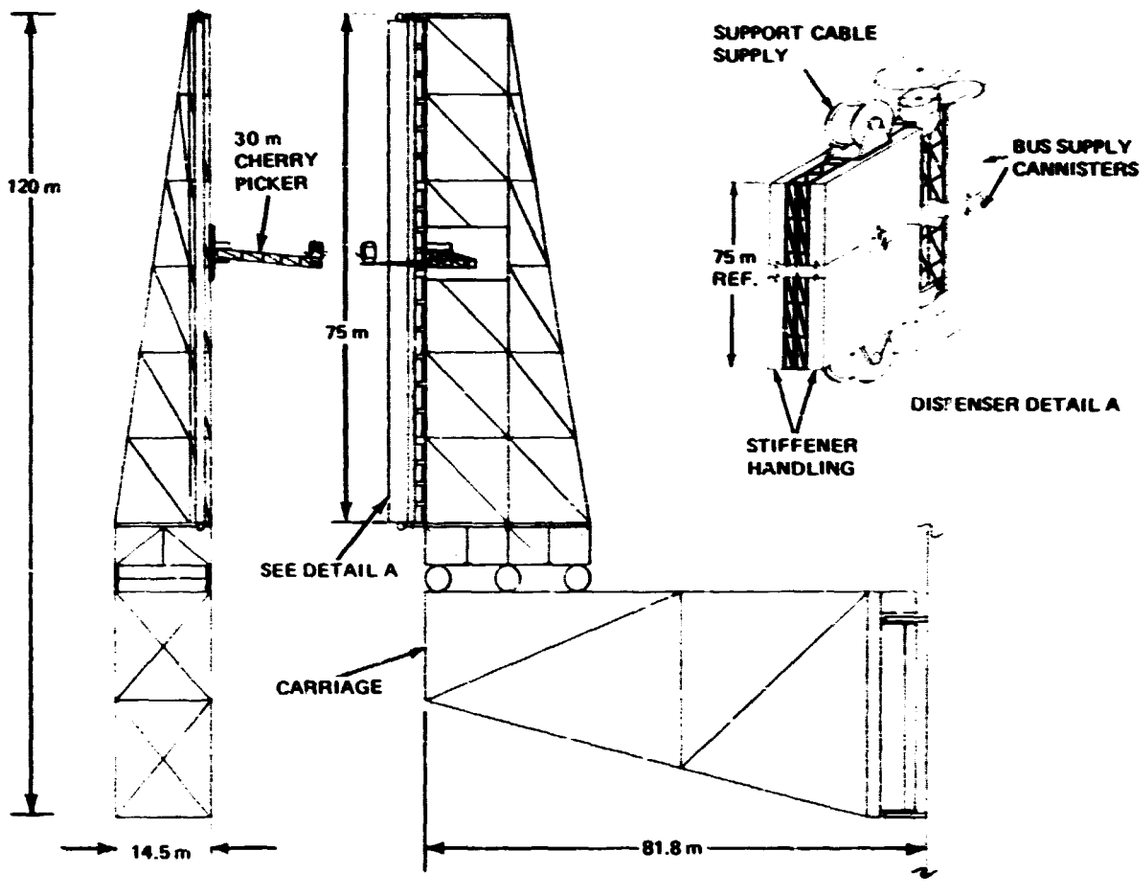

1775-101W

IRAD

Figure 12-30 Mobile Power Bus Dispensing Station

drums mounted on the top and bottom of the dispensing unit. The entire dispensing module pivots to dispense either feeder or main bus as required. The dispensing unit is supported on a base which travels on the main carriage. The main carriage moves the entire assembly from one end of the construction base to the other during feeder bus dispensing.

Aided by a dedicated, mobile cherry picker, the bus dispensing station installs and preloads the support cables on the array as part of the dispensing operation. The support strongbacks and intermediate stiffeners are installed while the bus array is still secured by the dispensor. The dispensing station provides the correct mix of bus array elements to meet main and feeder bus requirements in the correct sequence in the construction process. The dispensing station can cut and splice bus material as required.

During main bus dispensing operations, the dispensing station is positioned at one end of the construction base.

3.2 ENERGY CONVERSION SYSTEM ASSEMBLY

A breakdown of the assembly operations for the energy conversion system is shown by the abbreviated flow shown in Figure 12-31. This assembly activity includes the fabrication and assembly of the structure for the first construction pass (3.1.1) and the parallel installation and inspection of required subsystems (e.g. solar array blankets, power distribution, etc.) When the first half of the satellite energy conversion system has been constructed, the base will be indexed back along the side of the satellite structure to a position adjacent to the first frame (3.1.7). The second construction pass begins from that point and includes the fabrication and assembly of the remaining structure together with the parallel installation of other subsystems.

- End Builder Assembly Sequence - The end builder construction system is tailored to the structural cross section of the satellite and uses ten (10) dedicated semi-fixed beam machines to automatically fabricate continuous longitudinal members. Lateral and diagonal members of the structural assembly are fabricated by three (3) mobile beam machines. The assembly sequence as illustrated in Figure 12-32, begins with Step 1, the assembly of the first frame and its attachment to the longitudinal members. The structural members of the frame are fabricated by three mobile beam machines that travel from one position to the next. The upper lateral beam is fabricated and then positioned for assembly. As this member is being joined, the mobile beam

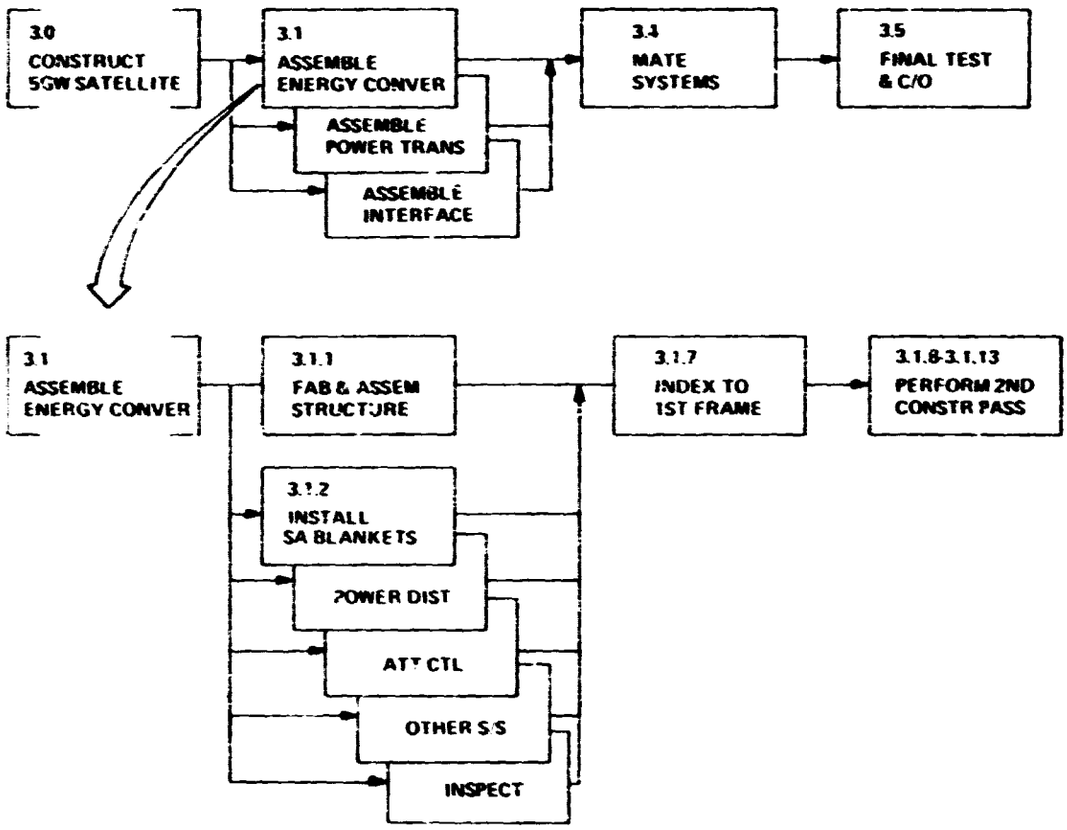

Figure 12-31 Satellite Construction Operations Analysis

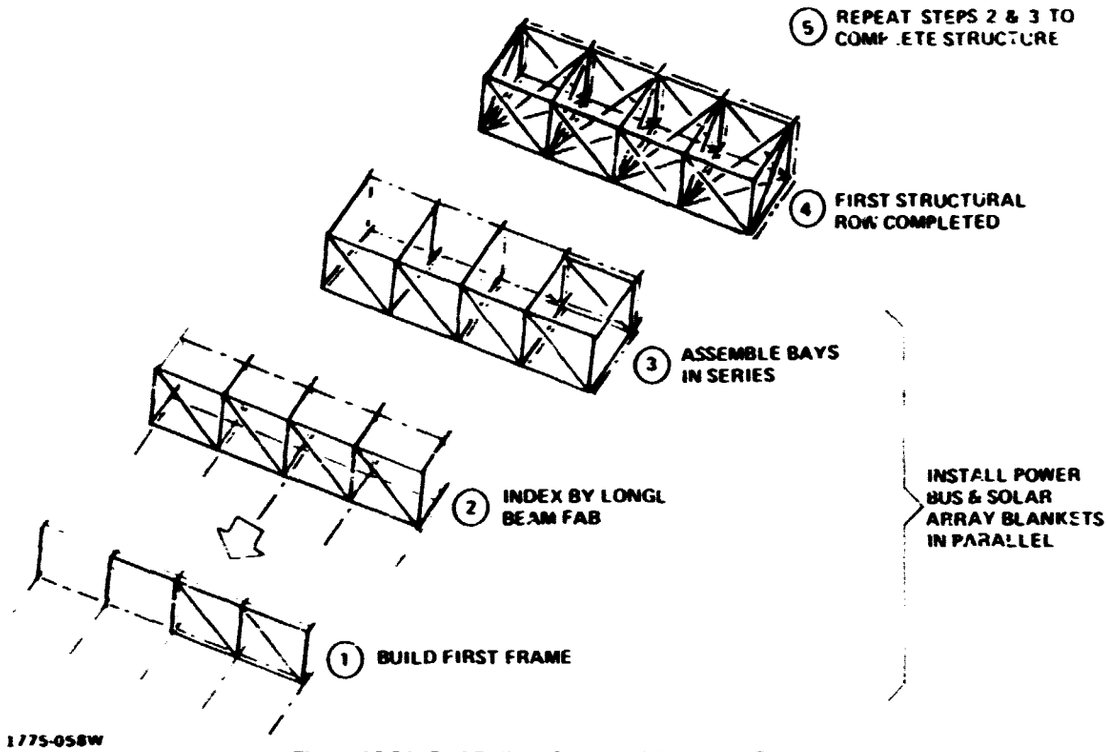

Figure 12-32 End Builder Structural Assembly Sequence

machines fabricate the other members of the frame needed to complete the assembly. Step 2 indexes the frame for one bay length by fabricating the continuous longitudinal beams from the dedicated beam machines. In Step 3, the next frame is built as in Step 1. During these three steps, power busses and solar array blankets are installed in parallel. The solar array blankets are deployed in the direction of build, are attached to the upper lateral beams and are fed out of canisters as the structure indexes. Longitudinal busses are installed "on the fly" as the structure is indexed; lateral busses are installed before a bay is indexed. In Step 4 the bay structure diagonal beams are fabricated and assembled to complete the bay. This bay is then indexed, as in Step 2, and the entire sequence repeated until the energy conversion structure is built.

The end builder concept couples similar functions for installing each subsystem to related operations for assembling the energy conversion structure. As shown in

Figure 12-33 this provides two avenues for attaining increased production performance .....operate automated construction equipment faster or add equipment.

- SPS Assembly Operations - The rendering in Figure 12-34 depicts the construction activities at levels F, G and H of the energy conversion construction facility. These levels are utilized in the construction of the upper surface of the energy conversion module. Shown nestled in the facility structure is the 7.5 m longitudinal beam machine (semi-fixed), and operating from a horizontally mounted track system are two mobile beam machines. One beam machine is shown fabricating the 7.5 m bracing beam and the other, a 12.7 m lateral (solar array support) beam. Located overhead on the facility overhang and operating from a track system, cherrypickers are used to maneuver and attach the completed beams. The complex operations of these two cherrypickers in the maneuvering, handing-off and installation of beam lengths of approximately 600 to 1000 meters requires further study.

  Solar array blanket deployment and installation is coupled with the end builder structural assembly sequence. Shown are the blanket installers operating from a track system mounted on the facility overhang. The solar array blankets are deployed from canisters mounted on the overhang. Replacement canisters are shown being moved into place and installed at their deployment station by a mobile flatbed cherrypicker.

The arrangement of major construction equipment at levels F, G, and H is also shown in Figure 12-35. The level G 7.5 m longitudinal beam builder substation is provided with 60 m travel distance to permit on-line maintenance and repair for continuity of construction operations. This provides about 1 hour for the repair and replacement of beam builder components while the shutdown beam builder tracks along at the same rate as the indexing structure. The figure also shows the bus dispensing station in relation to the other beam builders and the solar array anchor at level H.

The timeline for assembling the first two rows of the energy conversion system is shown in Figure 12-36.

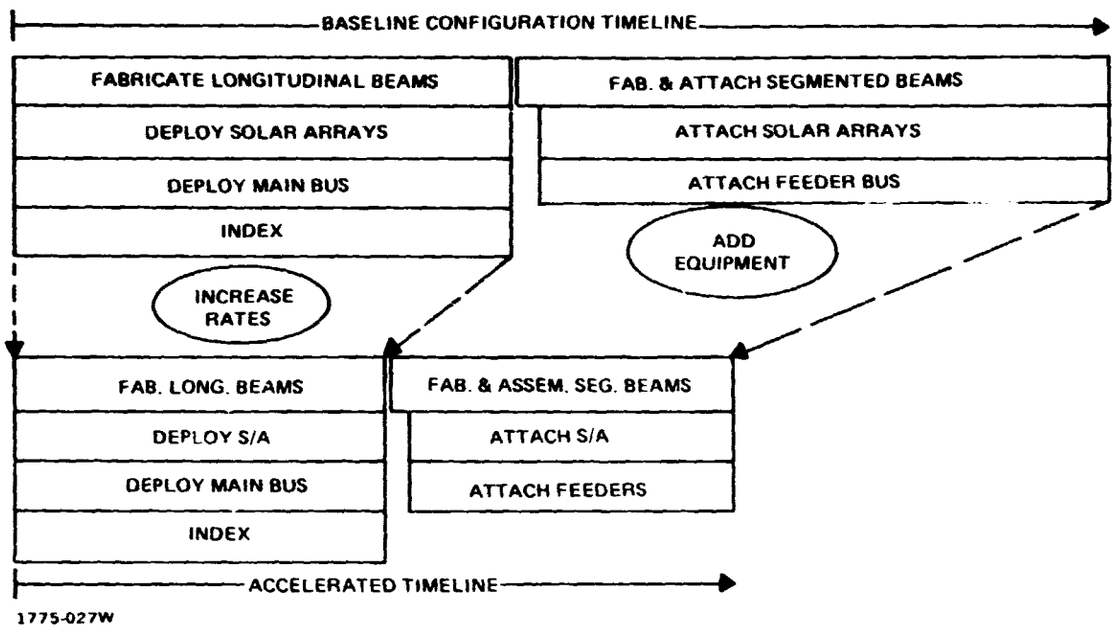

Figure 12-33 End Builder Coupled Assembly Operations

REPRODUCIBILITY OF THE ORIGINAL PAGE IS POOR

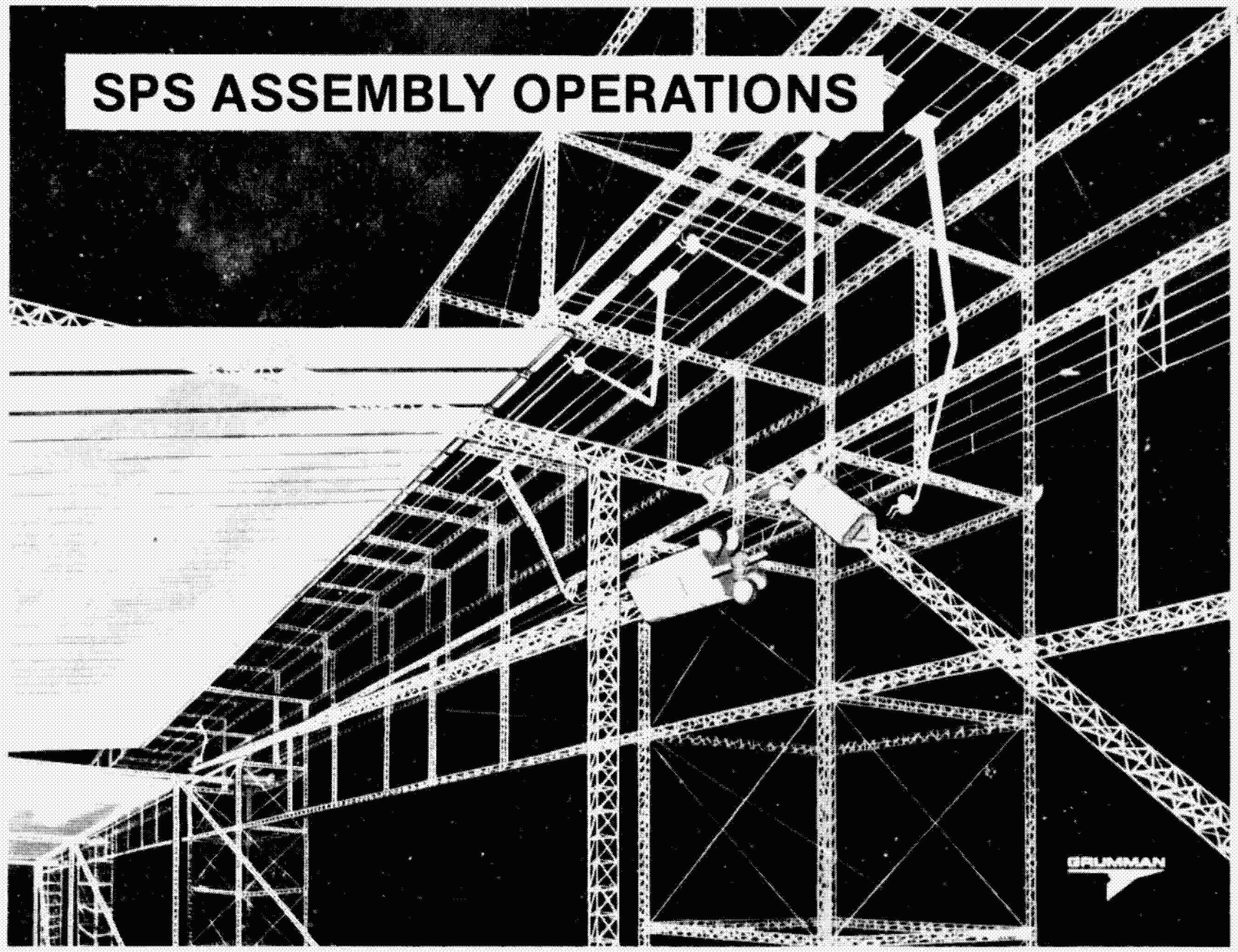

Figure 12-34 SPS Assembly Operations

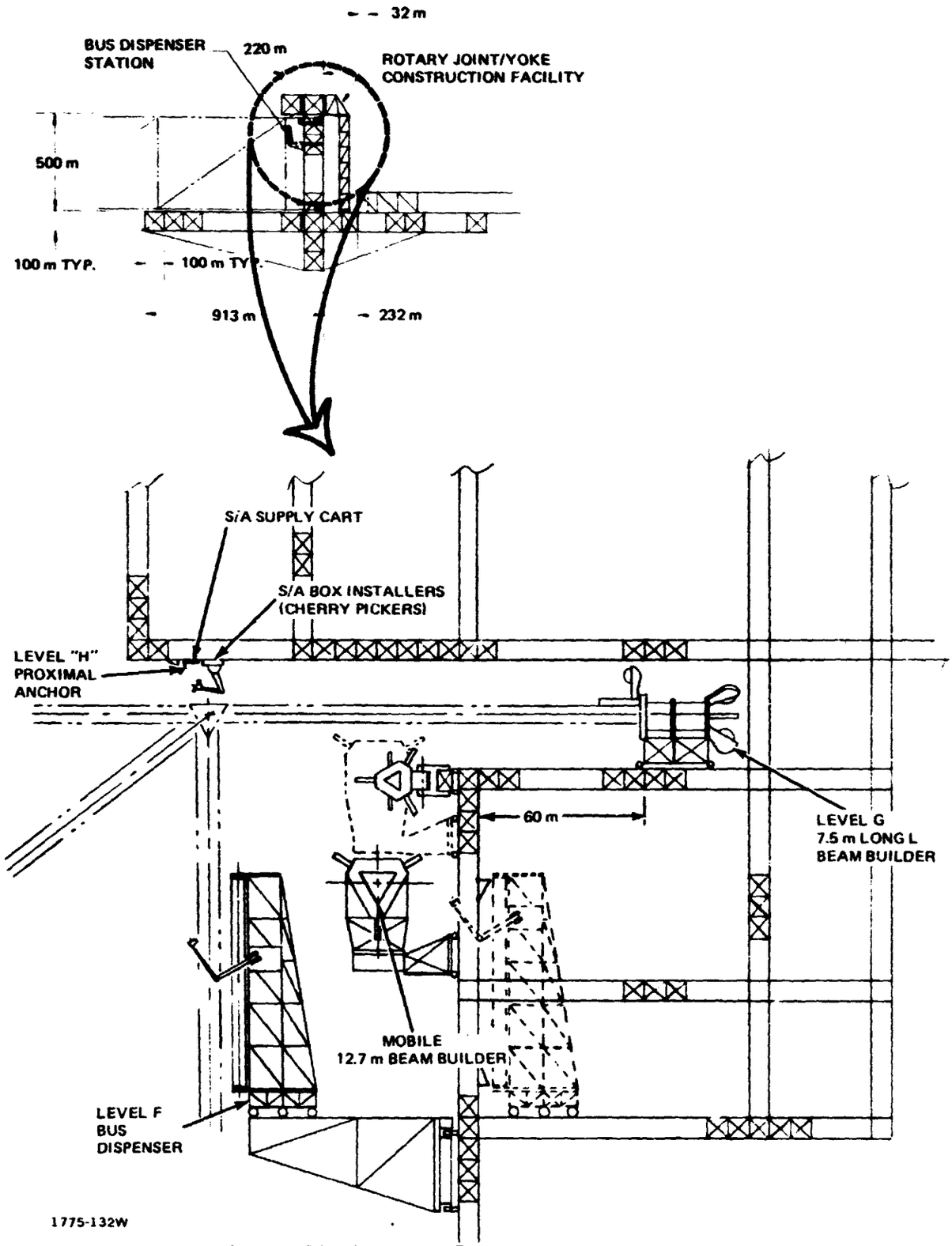

Figure 12-35 Solar Collector Facility – Construction System

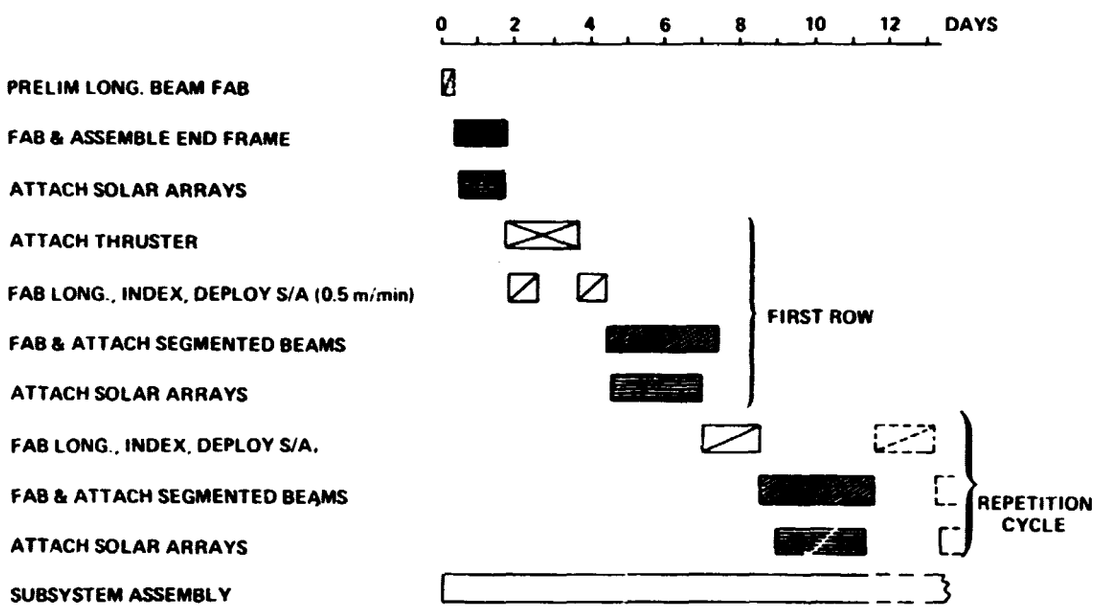

Figure 12-36 Energy Conversion System Assembly Timeline-Update

3.2.1 Fabricate and Assemble Structure

Figure 12-37 illustrates the generic sequence used for the fabrication and assembly of the Energy Conversion System Structure, which provides support for the Solar Array Blankets, Power Distribution System, Attitude Control System, and other subsystems that are all part of the Energy Conversion System. It also interfaces with the antenna yoke.

3.2.1.1 Installation Requirements - As shown in Figure 12-38 the Energy Conversion System Structure is designed with a hexahedral (box) truss arrangement 8 bays wide and 16 bays long, which includes two sizes of graphite composite tribeams. The heavier 12.7m beams are used at all other locations. In addition, 7.5m beams are used for structural support of the attitude control thrusters at each corner of the structure. Figure 12-39 shows the two types of beams. Type A beams are fabricated by a 12.7m mobile beam machine and are used only on the upper level of the structure to support the solar arrays. Type B beams are used for the rest of the structure. Ten Type B beams (without end fittings, but with the space frames shown in Figure 12-45) are fabricated by semi-stationary beam machines to provide the 16-bay long continuous longitudinal beams. Type B beams with end fittings are fabricated for all other structural members by two 7.5m mobile beam machines.

In addition to the structural configuration previously described, the top surface of the energy conversion system structural framework includes a maintenance track to accommodate solar array annealing operations. This track imposes additional requirements on the energy conversion system structural arrangement and on the beam machines. The upper surface continuous longitudinal beams are required to be oriented with a flat side up, as shown in Figure 12-40, to provide for the mounting of the track system. The tracks are supported by the beam with fittings attached at each beam batten.

3.2.1.2 Energy Conversion System Structure Construction Approach - The construction approach for the fabrication and assembly of the structure for the energy conversion system is described in detail in the End Builder Assembly Sequence in Subsection 3.2.

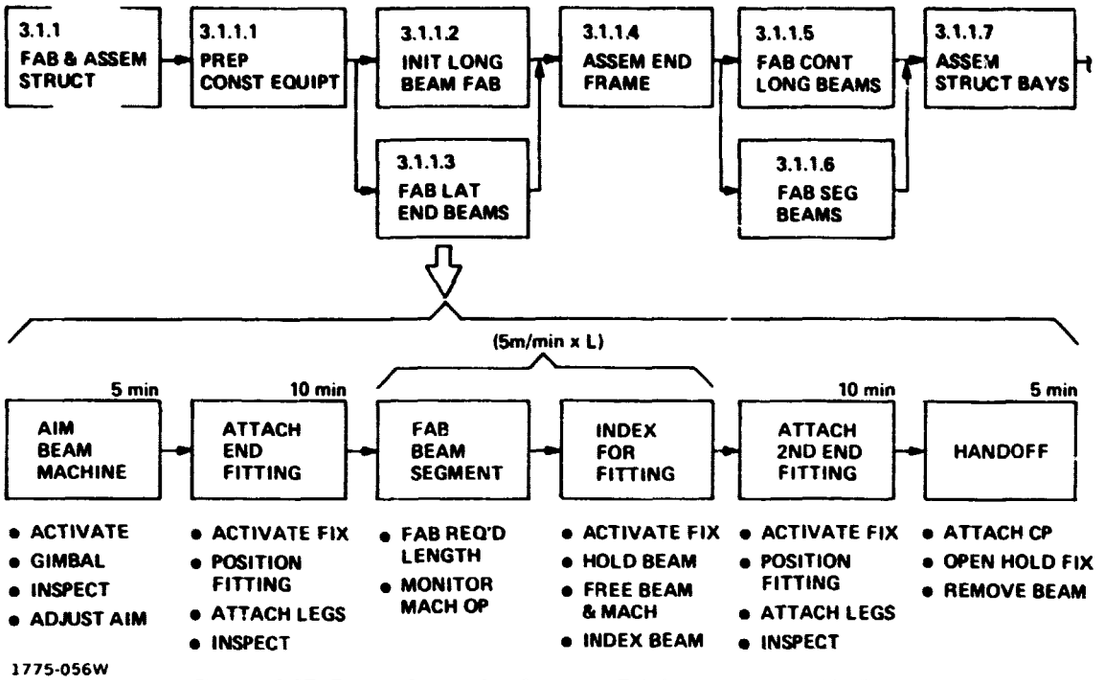

Figure 12-37 Energy Conversion Structure Fabrication & Assembly Flow

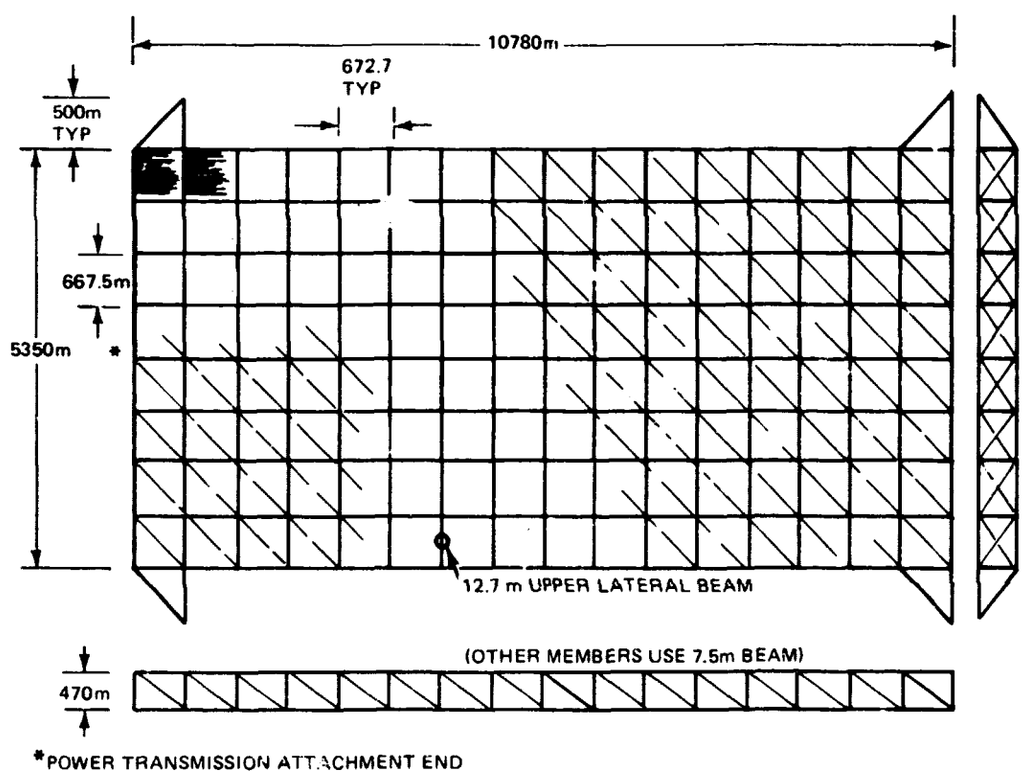

Figure 12-38 5 GW SPS Energy Conversion System Structure

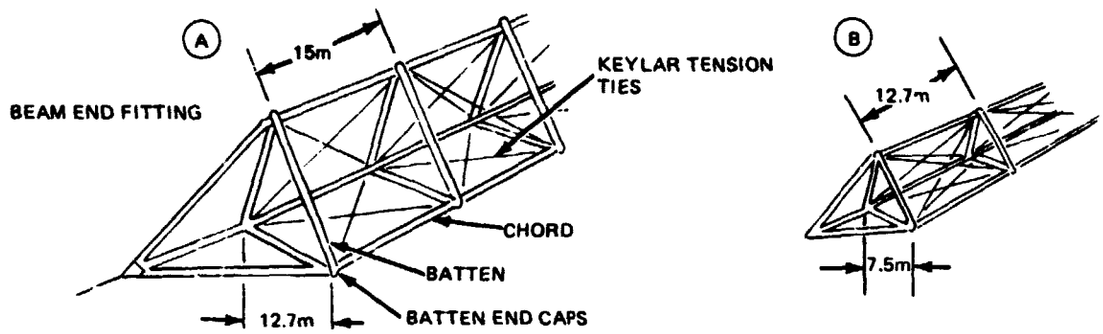

ITEM	TYPE A UPPER SURFACE LATERAL BEAM	TYPE B BEAM USED IN ALL OTHER LOCATIONS
SECTION (CHORD) MAT'L THICKNESS (t)	(1) 0.86mm	(2) 0.71 mm
EI_x	3.39E8 N/cm	1.80E8 N/cm^2
BATTEN	(2)	(2)
BATTEN SPACING	15.0m	12.7m
BEAM WIDTH	12.7m	7.5m
MASS/LENGTH	7.48 Kg/m	4.11 Kg/m

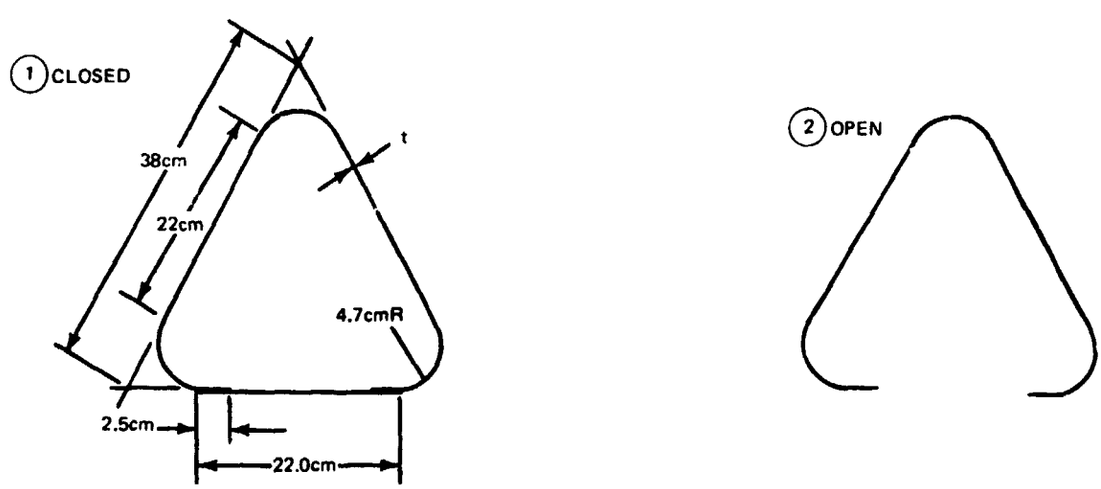

1775-026W

Figure 12-39 Energy Conversion Structural Configurations

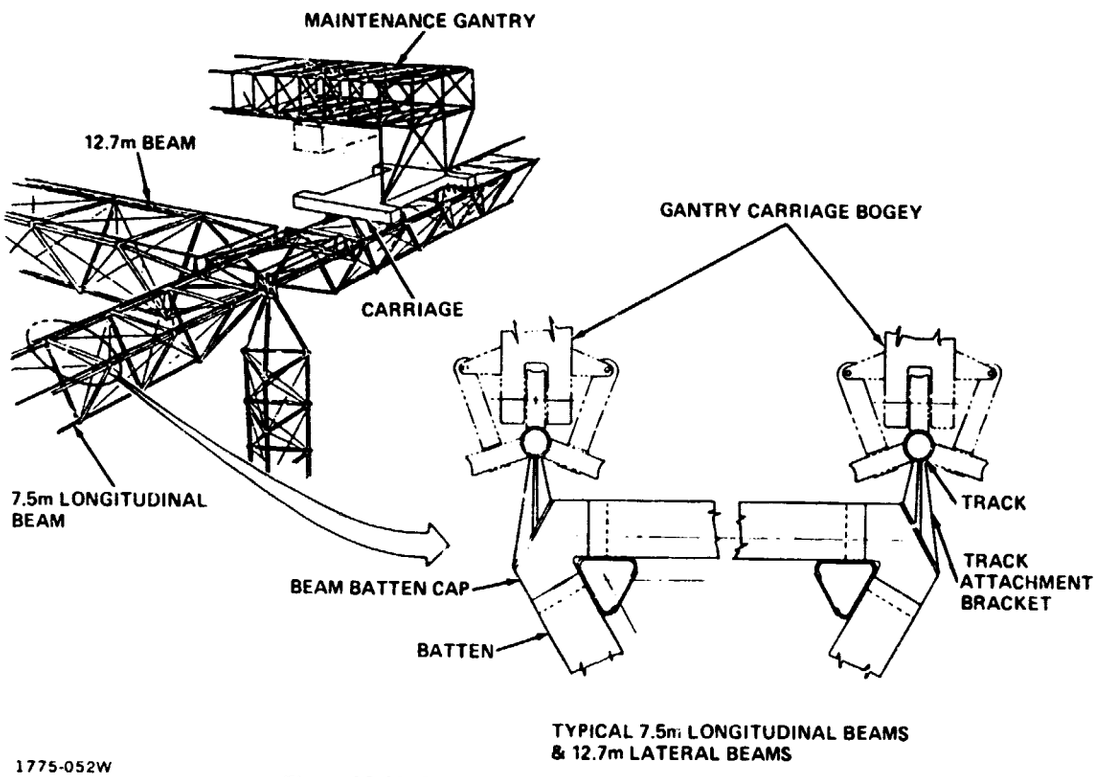

1775-052W

Figure 12-40 Satellite Maintenance Track Requirement

3.2.1.3 Structural Fabrication & Assembly Operations (Bays 1 to 4) - In Figure 12-37, the fabrication and assembly flow for the energy conversion system structure includes the preparation of the required construction equipment (Block 3.1.1.1), the fabrication and assembly of the end frame (Blocks 3.1.1.2 to 3.1.1.4) and successive fabrication and assembly of 16 rows of the structure (Blocks 3.1.1.5 to 3.1.1.7). Block 3.1.1.8 describes the operations performed to secure for the indexing operation, which brings the construction base to its starting position for second pass construction operations. These functional blocks are further broken down into operational sequences, shown in Tables 12-5 through 12-12.

- Prepare Construction Equipment (3.1.1.1) - The sequence of preconstruction functions performed in preparation for building the structure of the energy conversion system is depicted in Figure 12-41 and a detailed breakdown is given in Table 12-5. Preconstruction operations begin with the verification of the availability of the required number of the necessary types of equipment in operating condition. Then it is necessary to verify the availability of an adequate supply of construction material. The material must be loaded on the applicable equipment or stored in facilities near the installation locations. These verification functions can be performed significantly prior to commencement of construction, if desirable. Shortly before operations begin, the equipments will be manned and moved to the proper operating stations, if they are not already there.

  Each construction facility or local construction area supporting the assembly of the energy conversion system must operate on a tightly controlled logistics plan to avoid interruptions of the coordinated construction schedule. For example, at least 55 m of structural material must be delivered to and installed on each 7.5 m mobile beam machine every 4 days.

- Initiate Longitudinal Beam Fabrication (3.1.1.2) - As shown in Figure 12-42, the normal operating location of the longitudinal beam machines is set back from the position where the end frame is assembled. That provides an opportunity to initiate the operation of the beam machines independently and to monitor the operations of each machine to verify its proper functioning before tieing it into the longitudinal beam machine synchronization system.

  The initiation of the longitudinal beam machine operations begins, as shown in Figure 12-43 and Table 12-6, with the sequential activation of all 10 beam machines. The five upper beams will be made with track for solar array

TABLE 12-5 PREPARE CONSTRUCTION EQUIPMENT (3.1.1.1)

OPERATIONS	TIME (MIN)	REMARKS
• VERIFY EQUIPMENT AVAILABILITY	TBD	
1 12.7 M MOBILE BEAM MACHINE		WITH TRACK FAB. CAPABILITY
5 7.5 M LONG. BEAM MACHINES (UPPER)		WITH TRACK FAB. CAPABILITY
5 7.5 M LONG. BEAM MACHINES (LOWER)		
2 7.5 M MOBILE BEAM MACHINES		
3 30 M CHERRY PICKERS		
• VERIFY EQUIPMENT READINESS	TBD	
PRE-OPERATION MAINTENANCE		
CHECK POWER SUPPLY		
C. O. LIFE SUPPORT SYSTEM		
C. O. EQUIP. SUBSYSTEMS		
• VERIFY CONST. MATERIAL AVAILABILITY	TBD	
BEAM FABRICATION		
CAPS		
BATTENS		
SPACE FRAMES		
TRACKS		
TRACK ATT. BRACKETS		
CABLE REELS		
END FITTING ASSYS.		
• LOAD EQUIPMENT	TBD	AS ABOVE
• MAIN EQUIPMENT		
DOCK		
CHECK PRESSURE SEALS		
OPEN HATCHES	5	CREW TRANSFER OPERATION
TRANSFER		
CLOSE HATCHES		
CHECK PRESSURE SEALS		
DEPART		
ACTIVATE & C. O. COMM. SYS.	2	
ACTIVATE & C. O. OTHER SUBSYS.	10	
• POSITION EQUIPMENT		
5 7.5 M BEAM MACHINES	<20	G LEVEL SETBACK STATION
5 7.5 M BEAM MACHINES	<20	D LEVEL SETBACK STATION
1 7.5 M BEAM MACHINE	<136	G LEVEL TRACK
1 7.5 M BEAM MACHINE	<136	D LEVEL TRACK
1 12.7 M BEAM MACHINE	<68	F LEVEL TRACK

1775-106W

TABLE 12-6 INITIATE LONGITUDINAL BEAM FABRICATION (3.1.1.2)

OPERATIONS	DIST M	TIME @ 5 MPM	REMARKS
• ACTIVATE LONG. BEAM MACHINES			ALL 10 BEAM MACHINES
• FAB. SHORT LENGTH WITH FRAME START CAP, BATTEN & TRACK FAB ATTACH CABLES ATTACH BATTENS ATTACH TRACKS FAB. TO MIDPOINT TENSION & ATTACH CABLES ATTACH SPACE FRAME FAB TO END TENSION & ATTACH CABLES ATTACH BATTENS ATTACH TRACKS	12.7	25.4	INDEPENDENT OPERATIONS ON UPPER BEAMS ONLY ON UPPER BEAMS ONLY
• INSPECT			REJECT & REPEAT IF NECESSARY
• SYNC & FAB INITIAL BEAM LENGTH TRANSFER TO SYNC. CONTROL FAB INTER BATTEN SPACING TENSION & ATTACH CABLES ATTACH BATTENS ATTACH TRACKS	152.2	304.4	SYNCHRONIZED OPERATIONS ONE-BY-ONE CONTINUOUS MONITORING ON UPPER BEAMS ONLY
• SHIFT TO QUIESCENT MODE			
TOTAL	164.9	329.8	

1775-107W

TABLE 12-7. ENERGY CONVERSION SYSTEM STRUCTURAL BEAMS

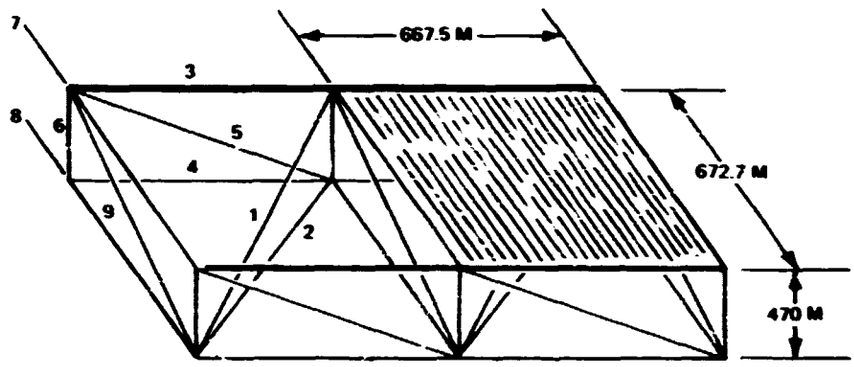

MEMBER	BEAM SIZE	BEAM LENGTH	BEAMS PER SPS	TOTAL LENGTH	BEAM MACHINE TYPE
1 – BODY DIAGONAL	7.5 M	1057.8 M	128	135,400 M	UPPER MOBILE
2 – CROSS-BAY DIAGONAL	7.5 M	947.7 M	128	121,300 M	LOWER MOBILE
3 – UPPER (SOLAR ARRAY) LATERAL	12.7 M	667.5 M	136	90,780 M	DEDICATED MOBILE
4 – LOWER LATERAL	7.5 M	667.5 M	136	90,780 M	LOWER MOBILE
5 – LATERAL DIAGONAL	7.5 M	816.4 M	136	111,000 M	LOWER MOBILE
6 – CORNER POST	7.5 M	470 M	153	71,900 M	UPPER MOBILE
7 – UPPER LONGITUDINAL	7.5 M	10,775.9 M*	9	96,870 M	10 FIXED
8 – LOWER LONGITUDINAL	7.5 M	10,775.9 M*	9	96,870 M	
9 – LONGITUDINAL DIAGONAL	7.5 M	820.6 M	144	118,200 M	UPPER MOBILE

1775-108W

* CONTINUOUS LONGITUDINAL BEAM LENGTH = 672.7 M/BAY x 16 BAYS + 7.5 M = 10,775.9 M

TABLE 12-8. FABRICATE END FRAME BEAMS (3.1.1.3)

OPERATIONS	TIME (MIN)	REMARKS
• AIM BEAM MACHINE ACTIVATE GIMBAL MECHANISM GIMBAL IN YAW CHECK AIMING ADJUST IN YAW & PITCH DEACTIVATE GIMBAL MECHANISM	5	BASE LINE TIME 90° CAPABILITY REQUIRED WITHIN TBD TOLERANCES? MINOR ADJUSTMENT
• ATTACH 1ST END FITTING ACTIVATE END FITTING FIXTURE POSITION END FITTING SWIVEL FIXTURE PICK UP FITTING ELEVATE FIXTURE ALIGN FITTING W/CAPS ATTACH FITTING TO CAPS INSERT LEGS IN CAPS INSERT PINS THROUGH CAPS INSERT CLIPS INSPECT LOWER FIXTURE & DEACTIVATE	10	FIXTURE IS ON BEAM MACHINE END FITTING FIXTURE OPERATIONS STRUCTURAL INTEGRITY
• FABRICATE BEAM SEGMENT ACTIVATE BEAM FABRICATOR FABRICATE BEAM LENGTH MONITOR CONTINUOUSLY DIRECTION LENGTH OF CAPS INTEGRITY OF BEAMS DEACTIVATE FABRICATOR	AS SHOWN	NO. / M / MIN 3 / 667.6 / 134 4 / 667.5 / 134 5 / 816.4 / 164 6 / 470 / 94 @ 5 M/MIN
• INDEX BEAM IN HOLDER ACTIVATE HOLDER CONTROLS CLAMP BEAM & CHECK GRIP SEVER BEAM INDEX BEAM DEACTIVATE INDEXER CONTROLS INSPECT	—	INCLUDED IN BEAM FAB TIME HOLDER PART OF BEAM MACHINE CUTTER PART OF BEAM MACHINE BEAM STRAIGHTNESS
• ATTACH 2ND END FITTING	10	SAME AS 1ST FITTING
• HANDOFF BEAM SIGNAL READINESS TO CP's CP's GRASP BEAM SIGNAL READINESS TO ABM OPEN HOLDER SIGNAL FIXTURE OPEN REMOVE BEAM FROM HOLDER SIGNAL BEAM CLEAR OF HOLDER DEACTIVATE HOLDER CONTROL 1775-109W	5	BASELINE TIME IF APPLICABLE

TABLE 12-9 BEAM INSTALLATION

OPERATIONS	TIME (MIN)	NO. 1 CP	NO. 2 CP	REMARKS
• HANDOFF	–	P	P	SEE TABLE 5
• TRANSPORT BEAM	1			LESS THAN 50M
SIGNAL READINESS			P	
SLAVE NO. 2 CP		P	S	
XPORT 1 END TO APPROX LOC		P	S	
SIGNAL ARRIVAL		P		
SWING 2ND END TO APPROX LOC			P	
SIGNAL ARRIVAL			P	
• ROLL BEAM (IF NECESSARY)	–			PERFORMED DURING TRANSPORT
SIGNAL INTENT		P		
ROLL BEAM		P	S	LESS THAN 30°
SIGNAL COMPLETION		P		
• CONNECT 1ST END	4			
ALIGN BEAM		P		
UNLATCH ATTACH. FITTING		P		
INSERT BEAM END		P	S	
LATCH & LOCK ATTACH. FITTING		P		
TEST CONNECTION		P		
RELEASE BEAM		P		
SIGNAL COMPLETION		P		CAN DEPART IF DESIRABLE
• CONNECT 2ND END	5			
ALIGN BEAM			P	
UNLOCK ADJUSTMENT FITTING			P	
UNLATCH NODAL FITTING			P	
ALIGN BEAM			P	
INSERT BEAM BY ADJ. FITT. LENGTH			P	
LATCH & LOCK NODAL FITTING			P	
LOCK ADJUSTMENT FITTING			P	
TEST CONNECTION			P	DEPART
TOTAL	10			P = PRIMARY OPERATION S = SECONDARY ROLE

1775-110W

TABLE 12-10. ASSEMBLE END FRAME (3.1.1.4)

OPERATIONS	TIME (MIN)	REMARKS
• POSITION EQUIPMENT	–	AS REQUIRED
• ASSEMBLE BAY 1 ATTACH BEAM 6 ATTACH BEAM 3 BEGIN S/A ATTACHMENT ATTACH BEAM 4 ATTACH BEAM 5 END S/A ATTACHMENT ATTACH BEAM 6	417	 D LEVEL 7.5 M BEAM MACHINE 12.7 M BEAM MACHINE D LEVEL 7.5 M BEAM MACHINE G LEVEL 7.5 M BEAM MACHINE D LEVEL 7.5 M BEAM MACHINE
• REPOSITION BEAM MACHINES GIMBAL 12.7 M BEAM MACHINE RELOCATE BOTH 7.5 BEAM MACHINE	 (5) (34)	 180° IN YAW 1 BAY
• ASSEMBLE BAY 2 ATTACH BEAM 3 BEGIN S/A ATTACHMENT ATTACH BEAM 5 ATTACH BEAM 4 ATTACH BEAM 6 END S/A ATTACHMENT	350	 12.7 M BEAM MACHINE G LEVEL BEAM MACHINE D LEVEL BEAM MACHINE D LEVEL BEAM MACHINE
• RELOCATE BEAM MACHINES 7.5 M BEAM MACHINE 12.7 M BEAM MACHINE	 (34) (68)	 1 BAY 2 BAYS
• ASSEMBLE BAY 3	274	SAME AS BAY 1
• REPOSITION BEAM MACHINES GIMBAL 12.7 M BEAM MACHINES RELOCATE BOTH 7.5 M BEAM MACHINES		 180° IN YAW 1 BAY AT 20 MPM
• ASSEMBLE BAY 4	360	SAME AS BAY2
• ATTACH 2 INDEXERS POSITION ROTATE ATTACHMENT FITTING OPEN FITTING ELEVATE FITTING CLOSE FITTING TEST ATTACHMENT SHIFT TO FREE WHEELING	TBD	
TOTAL 1775-111W	1401	DOES NOT INCLUDE INDEXER OPERATIONS

TABLE 12-11. FABRICATE CONTINUOUS LONGITUDINAL BEAMS (3.1.1.5)

OPERATION	LENGTH M	TIME AT 0.5 MPM	REMARKS
• REACTIVATE SYNC BEAM MACHINES	–	–	PARALLEL WITH FRAME ASSY.
• FAB LONG BEAMS			
FAB 39 – 12.7 m BAYS	495.3	990.6	FOR Nth ROW
FAB ADJUSTMENT BAY	12.5	25	
FAB SPACE FRAME BAY	12.7	25.4	FOR N + 1st ROW
FAB ADJUSTMENT BAY	12.5	25	
FAB 11 – 12.7 m BAYS	139.7	279.4	
• RESUME QUIESCENT MODE	–	–	PARALLEL WITH STRUCT. ROW ASSY.
TOTAL	672.7	1345.4	

1775-112W

TABLE 12-12. ASSEMBLE STRUCTURAL BAYS (3.1.1.7)

OPERATIONS	TIME (MIN)	REMARKS
• FAB. LONG. BEAMS		AS BEFORE
• ASSEMBLE BAY 1 ATTACH BEAM 3 ATTACH BEAM 9 BEGIN S/A ATTACHMENT ATTACH BEAM 5 ATTACH BEAM 1 ATTACH BEAM 2 ATTACH BEAM 6 ATTACH BEAM 4 END S/A ATTACHMENT	708	 12.7 M G LEVEL 7.5 M BEAM MACHINE D LEVEL 7.5 M BEAM MACHINE G LEVEL 7.5 M BEAM MACHINE D LEVEL 7.5 M BEAM MACHINE G LEVEL 7.5 M BEAM MACHINE D LEVEL 7.5 M BEAM MACHINE
• ATTACH INDEXER POSITION INDEXER ROTATE FITTING OPEN FITTING ELEVATE FITTING CLOSE FITTING TEST ATTACHMENT SHIFT TO FREE WHEELING	TBD	IN PARALLEL WITH BAY 2 ASSY UNDER CORNER POST (NO. 6 BEAM)
• REPOSITION BEAMBUILDERS GIMBAL 12.7 M BEAM MACHINE RELOCATE BOTH 7.5 M BEAM MACHINE		 180° IN YAW 1 BAY AT 20 M/MIN
• ASSEMBLE BAY 2	607	SAME AS BAY 1
• RELOCATE ALL 3 BEAMBUILDERS		1 BAY AT 20 M/MIN
• ASSEMBLE BAY 3	607	SAME AS BAY 1
• REPOSITION BEAMBUILDERS GIMBAL 12.7 M BEAM MACHINE RELOCATE BOTH 7.5 M BEAM MACHINES		 180° IN YAW 1 BAY AT 20 M/MIN
• ASSEMBLE BAY 4	704	LIKE BAY 1 WITH EXTRA NO. 6 & NO. 9 BEAMS
• ATTACH INDEXER	TBD	AS ABOVE
• DETACH 2 INDEXERS	TBD	FROM PREVIOUS FRAME
TOTAL 1775-113W	2626	DOES NOT INCLUDE INDEXER OPERATIONS

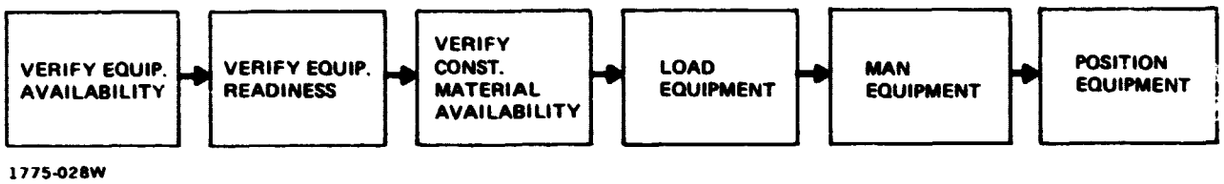

Figure 12-41 Prepare Construction Equipment (3.1.1.1)

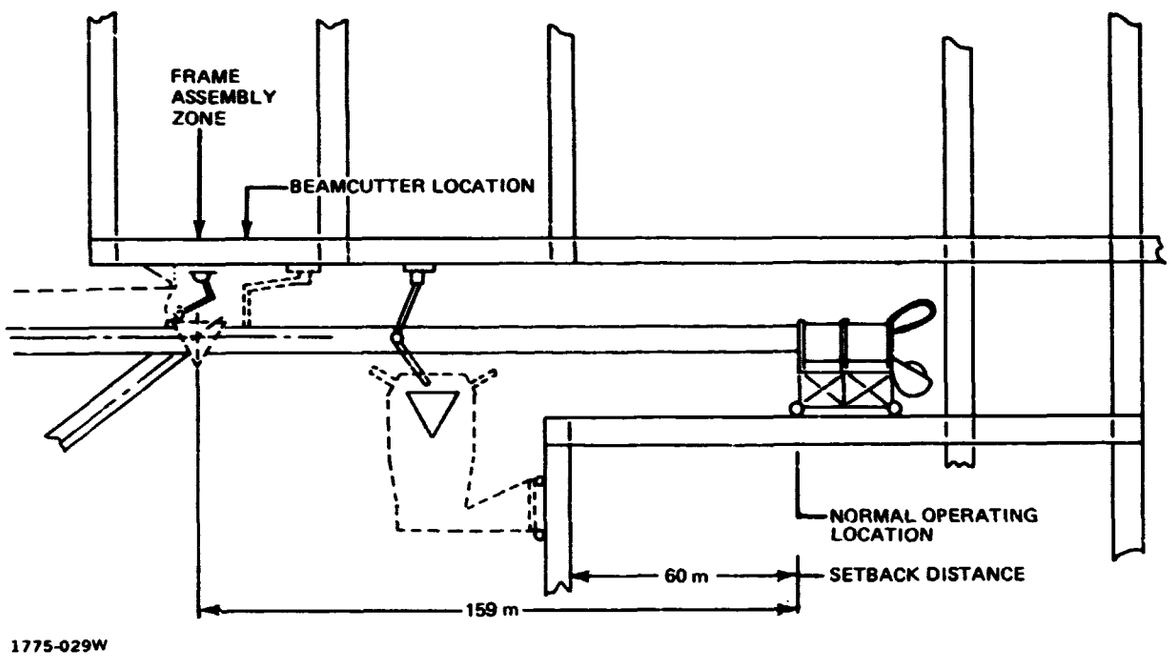

Figure 12-42 Longitudinal Beam Machine Normal Operating Location

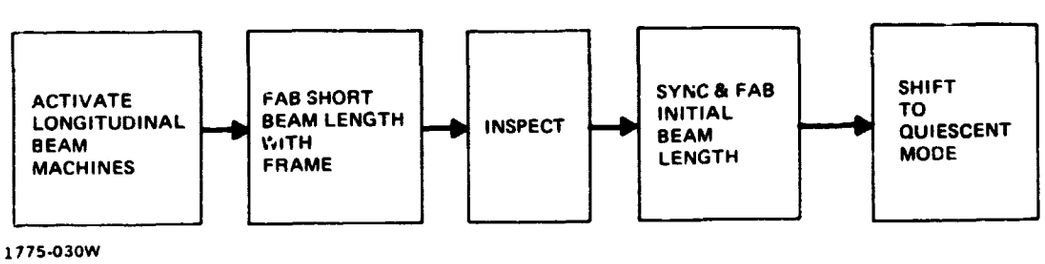

Figure 12-43 Initiate Longitudinal Beam Fabrication (3.1.1.2)

maintenance. Each beam machine independently fabricates a short length of longitudinal beam for the installation of the space frame to which the end frame structure will be attached. As shown in Figure 12-44, the space frame is automatically installed by the beam machine during the fabrication of the continuous longitudinal beams. Pickup points on the periphery of the frame provide easy access for the attachment of the lateral, vertical, and diagonal bracing beams of the end frame. These pickup points are located so that the end load in each attaching beam is aligned with the centroid of the continuous longitudinal beam, as shown in Figure 12-45. These frames are compatible with beam machine fabrication and could be space fabricated or ground fabricated in segments and space assembled. The frame segments are loaded into beam machine supply cannisters and the frame assembly becomes an integral operation of the beam machine.

After the space frame installation is completed and inspected, beam fabrication continues and, one-by-one, control of the 10 independently operating longitudinal beam machines is transferred to centralized control for synchronized operation for the remainder of the beam fabrication. At the completion of this synchronized beam fabrication operation, the longitudinal beam machines will not be used again for nearly two days, while the end frame is assembled. Therefore, they will be shifted to a quiescent mode.

During the entire sequence. the fabrication operations are controlled by a 2 man crew in a centralized control station and are monitored continuously, but specific inspections are indicated after completion of the first three bays. At any time, especially during independent operations, the beam machines can operate at an increased rate to allow more time for quality control, because they are not yet indexing a massive structure. The timeline in Figure 12-46 shows a total of 329.8 minutes for this phase, based on a fabrication rate of 0.5 mpm.

- Fabricate Lateral End Beams (3.1.1.3) - Each of the end frame beams (Nos. 3, 4, 5, and 6) defined in Table 12-7 is fabricated by the mobile beam machines according to the sequence of operations shown in Figures 12-47 and 12-48 and described in detail in Table 12-8.

  These beam segments vary in length from 470 m to 816.4 m and in mass from 3,355 kg to 4,992 kg. To minimize induced shear loads during subsequent

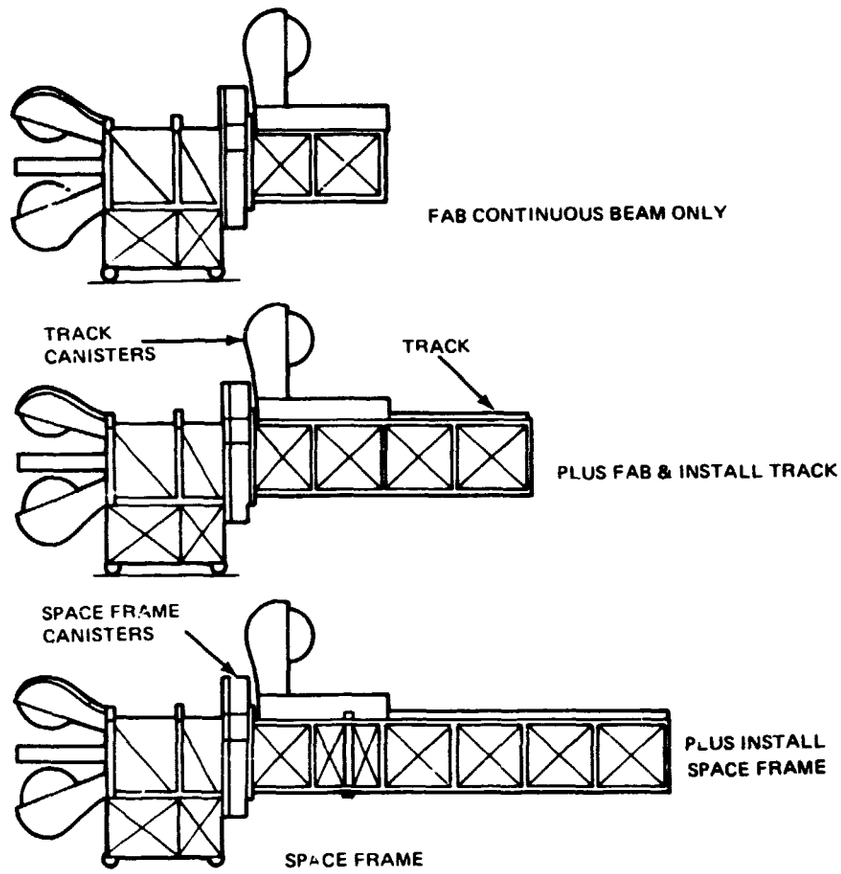

1775-031W

Figure 12-44 Longitudinal Beam Machine Fabrication Modes

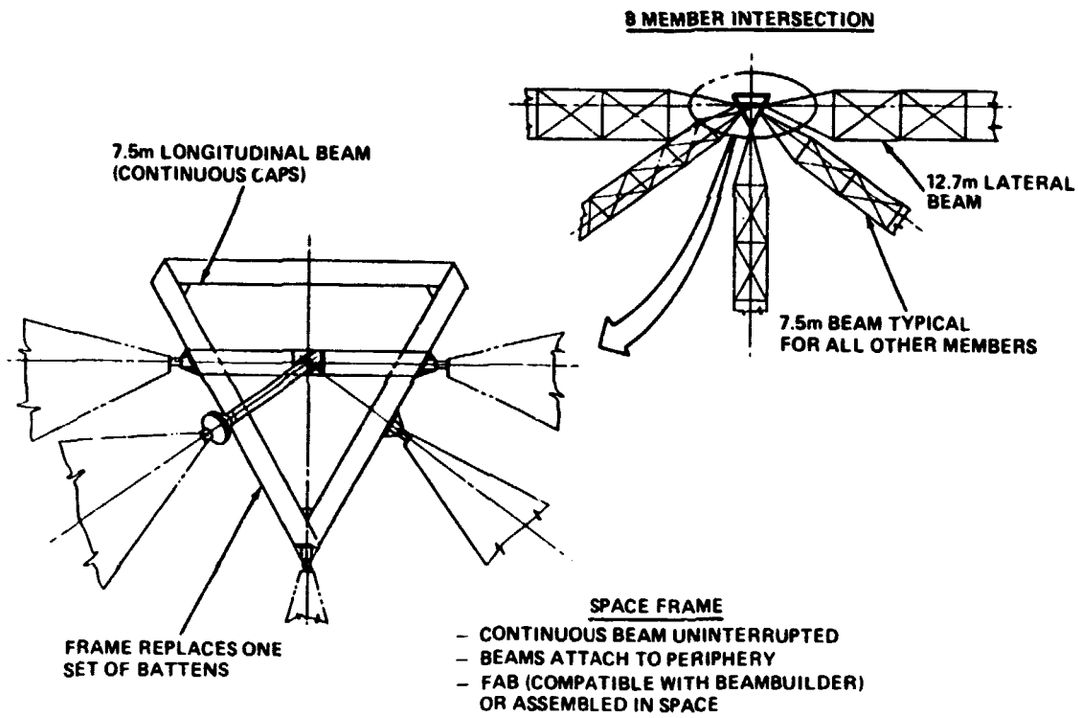

1775-054W

Figure 12-45 Structural Joint Design Compatible With Continuous Longitudinal Beam Construction

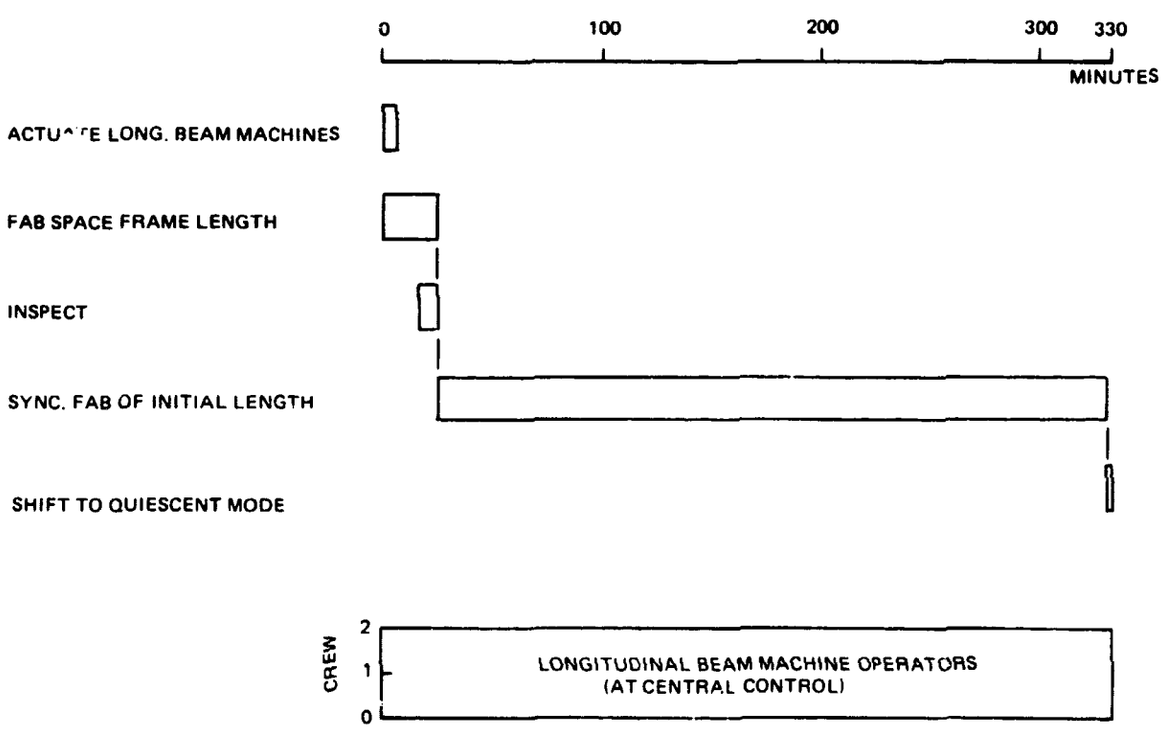

1775-032W

Figure 12-46 Initiate Longitudinal Beam Fabrication (3.1.1.2)

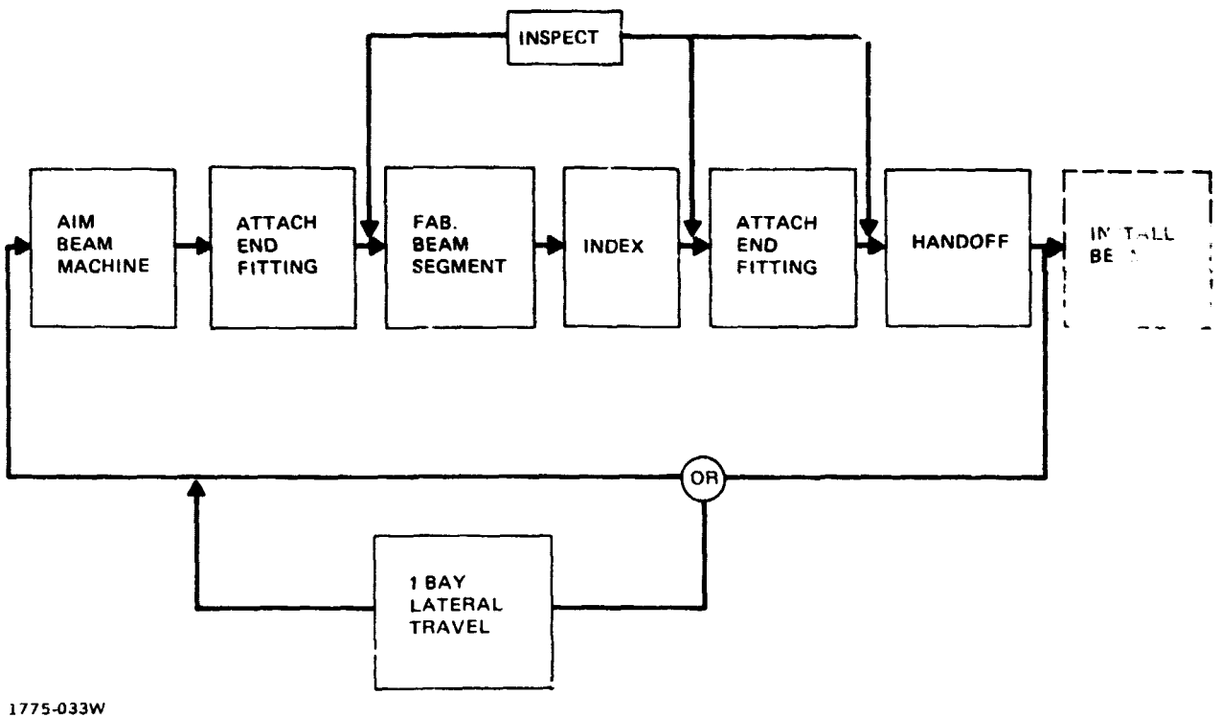

Figure 12-47 Fabricate End Frame Beams (3.1.1.3) (No. 3, 4, 5 & 6 Beams)

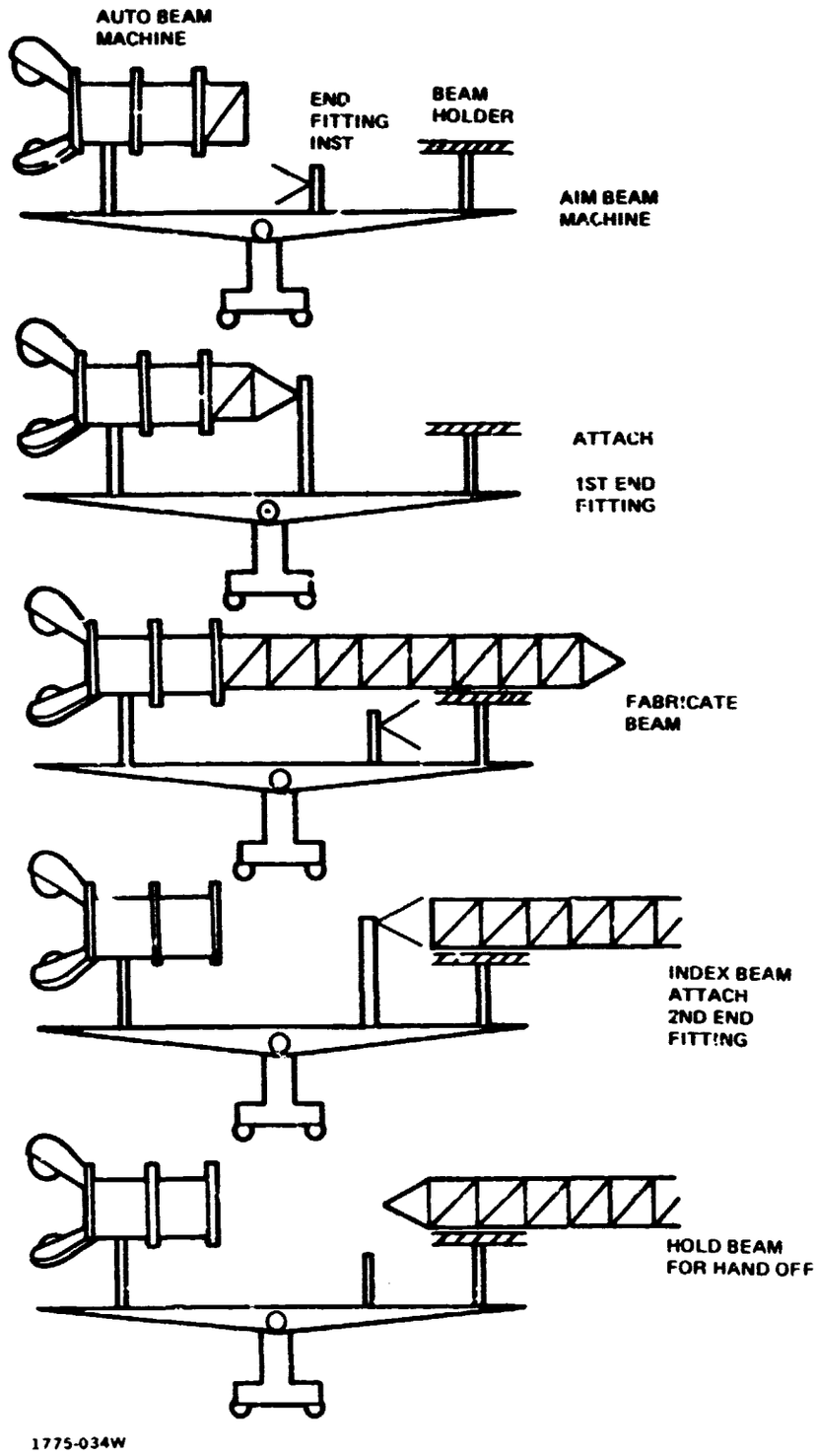

Figure 12-48 Automatic Beam Machine

beam installation operations, the initial operation in the fabrication of the beam is to aim the beam machines in the optimum direction to reduce beam handling. Aiming the beam machines is performed by gimbaling in the yaw direction, because the mobile beam machines are on tracks situated on the side of the construction base. A slight adjustment in pitch may also be required to put the far end of the beam in a favorable location to be acquired by a cherrypicker. Next the end fitting installation fixture, located on the beam machine carriage, acquires a tripodal end fitting from the storage rack, positions it and installs it on the stubs of the beam that extend from the beam fabricator. After the fitting is installed, the beam fabricator is activated and the proper length for the 3, 4, 5, or 6 beam is automatically fabricated, as an integral number of 12.5 m beam bays. Assembly of each successive bay is accomplished in a two step process. The fabrication of the caps deploys and tensions the cables. Then the tensioned cables and the battens are attached to the caps. As a part of the automation process, when beam fabrication is completed, the beam holder clamps the beam in place, the cutter severs it, and the holder indexes it a proper distance to provide clearance for the installation of the second end fitting, which is installed the same as the first. Then it is handed off to two cherrypickers and while they are installing it, the beam machine gimbals to begin operations for the fabrication of the next beam.

Although the beam segment has been continuously monitored for structural integrity during the entire process, specific inspections are indicated in Figure 12-47 and Table 12-8 for the end fitting installations and at the conclusion of indexing for beam straightness as a final determination for accepting or rejecting the beam. Based on the information supplied, repairs to the beam may be made and/or notification may be submitted to the far end cherrypicker to move to a more favorable position to acquire the beam.

- Assemble 4 Bay Wide End Frame (3.1.1.4) - The 4 bay end frame is assembled one bay at a time, as shown in Figure 12-49. The fabrication and assembly sequence for the first two bays is shown in Figure 12-50. This sequence includes the location and planned use of the three mobile beam machines, the direction of beam fabrication and the positions for cherrypicker beam handling and assembly operations (which are noted C1, C2, C3), together with their attendant route of travel between positions. To increase equipment utilization, it is assumed that the chrrrypickers used for beam installation can travel from

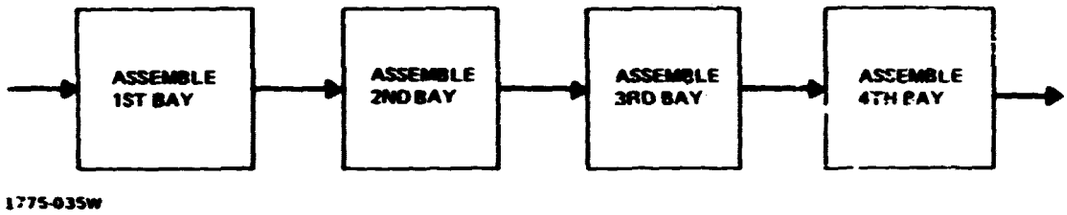

Figure 12-49 Assemble End Frame (3.1.1.4)

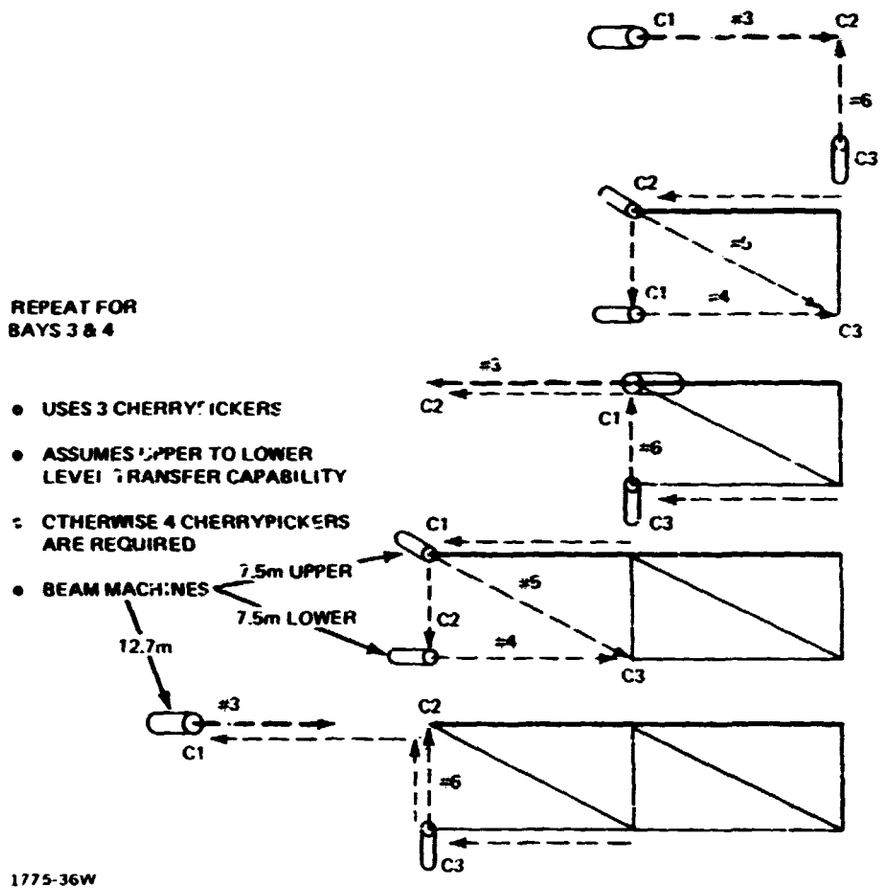

Figure 12-50 End Frame Fabrication & Assembly Sequence (2 Bays)

the upper to the lower operating levels. Lacking that capability, it will be necessary to provide an additional cherrypicker, as shown in Figure 12-61, since two are required on each level for the attachment of any lateral beam.

- Beam Installation - During the process of transporting and installing the beam segments, they will be handled so as to minimize induced shear load and bending. Two cherrypickers, one at each end of the 400 to 800 m beam segments, will be used for beam installation. Therefore, it must be a co-ordinated operation. The sequence of coordinated activities required for the installation of a beam is shown in Figure 12-51 and Table 12-9. It is assumed that the No. 1 cherrypicker will make the beam connection first and will be performing the primary (P) operation and that the No. 2 cherry-picker which is closest to the beam machine has a secondary (S) cooperative role to perform.

The cherrypickers are in the immediate vicinity of the beam installation location, when they acquire the beam. Since the cherrypicker travel rate is 50 mpm, cherrypickers will be able to transport their end of the beam the remaining distance to its designated installation location within one minute. The lead cherrypicker will go there directly, while the other proceeds in the general direction making whatever adjustments are necessary. When the lead cherrypicker has arrived, it holds its position and allows its stabilizer/grappler to swivel freely to accommodate the other cherrypicker. Then the No. 2 cherrypicker has the primary responsibility while continuing to its destination. Since the No. 1 cherrypicker is installing its end of the beam first, it will determine whether it is necessary to roll the beam around its longitudinal axis, and if so how much (up to 30°), to achieve a specified apex up or down position of the beam. The No. 2 cherrypicker will roll its end of the beam, as instructed. This can be performed during beam transport in most instances. While connecting the first end of the beam, the only activity that affects the No. 2 cherrypicker is the slight movement caused by the insertion of the beam end. That can be accommodated by putting the boom in "neutral." Connection of the second end is a one cherrypicker operation performed by the No. 2 cherrypicker. No response is needed from the No. 1 cherrypicker. It could actually be enroute to its next operating location.

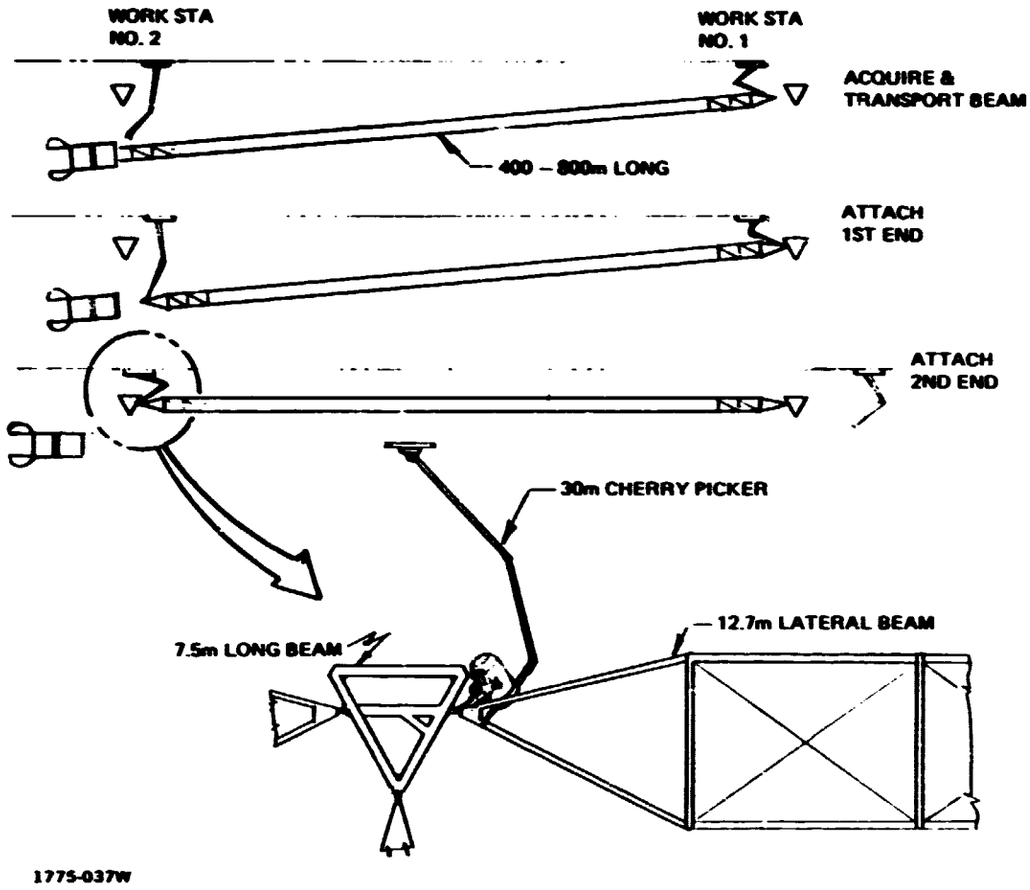

Figure 12-51 Beam Installation Sequence

As indicated previously, the fabrication and assembly of the segmented beams and the attachment of the solar array are coupled operations. Within each of the four bays of the end frame, after the solar array support beam is installed, the solar array blankets are attached to it and concurrently the other beam segments are being fabricated and attached to the longitudinal beams. The beam/solar array attachment sequence is shown in Table 12-10. The total time required for each bay, up to the completion of the attachment of the last beam or solar array, whichever takes longer, is shown for all four bays. The difference in the assembly times results from:

1. The extra No. 6 beam in the first bay.
2. The two-bay operation for the solar array support beam and the resultant beam machine and cherrypicker travel time.
3. Starting fabrication of the solar array support beam, while the solar arrays in the previous bay are still being attached.

As also shown in Table 12-10, after the end frame has been completely assembled, indexers are attached to the space frames underneath the first and fifth corner post. These indexers will be used to support the energy conversion system during the subsequent longitudinal beam fabrication phase.

- Utilization of Equipment & Crews - The utilization of the beam machines and cherrypickers and the required manpower is shown in Figure 12-52 for the assembly of the end frame. Manpower and dedicated cherrypickers used for solar array installation are also referenced. The fabrication of any beam segment and its installation by the cherrypickers is correlated by means of the beam number (3, 4, 5, or 6). As previously stated, the installation of the solar arrays commences after the solar array support beam (No. 3) is installed.

Note the effective utilization of the 7.5 m lower beam machine. It is in continuous operation fabricating No. 4 or No. 6 beams during the entire end frame assembly sequence, except for the 5 minute intervals required for beam aiming and the 34 minute intervals for traveling from one operating position to the next. Conversely, the utilization for the beam installation cherrypickers is very low, especially the No. 2 cherrypicker on the lower level. That cherrypicker is only used for 15 minutes to install each of the

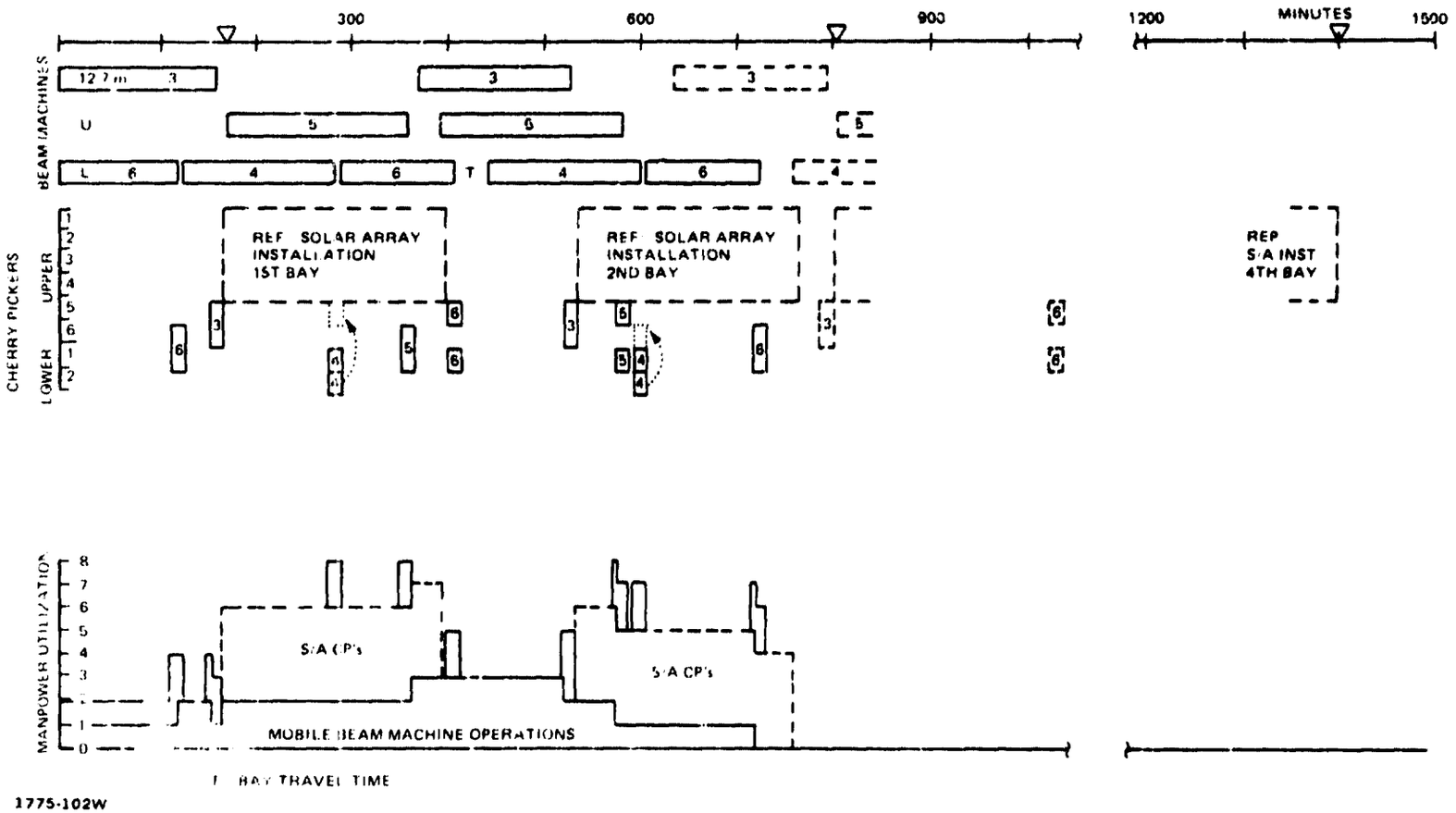

1775-102W

Figure 12-52 Fabrication & Assembly Timeline (End Frame)

No. 4 beams, which is an overall utilization of less than 4% for the entire end frame assembly.

If a cherrypicker capability to travel between the upper and the lower surfaces is provided, one of the upper cherrypickers can be used for installing the No. 4 beam (as shown by the dotted lines) and the beam installation cherrypicker crew can be reduced from 4 to 3. That will not affect the composite manpower utilization diagram at the bottom of Figure 12-52.

The first bay of the end frame is completed at T = 417 minutes with the cherrypicker operations that attach the second vertical beam. The second bay is completed at T = 767 minutes with the attachment of the solar arrays. The beginning of the third frame is shown as dashed lines. The completion of the third and fourth frames are shown only as the cherrypicker operations that install the fourth vertical beam at T = 1041 minutes and end of the solar array installation at T = 1401 minutes.

- Fabricate Continuous Longitudinal Beams (3.1.1.5) - The sequence of operations for fabricating the continuous longitudinal beams in rows 1 through 16 is shown in Figure 12-53. This sequence begins with reactivating the longitudinal beam machines for synchronized operations. When synchronized control is verified, the 10 beam machines will fabricate 672.7 meters of continuous longitudinal beam in unison, at 0.5 meters per minute. During the continuous fabrication process, space frames are automatically installed at the appropriate location in each beam. As shown in Figure 12-42, the initial longitudinal beam fabrication operation provides a 159 meter beam length due to the beam machine setback location. Hence the next space frame is installed after 513.7 meters of beam manufacture. Fabrication, however, continues for another 159 meters, which will be used for the subsequent row of structure, as shown in Figure 12-54 and Table 12-11. As before, the 5 upper longitudinal beams are also constructed with track to support the solar array maintenance requirement. When a total length of 672.7 meters is made, the synchronized beam machines are returned to the quiescent mode.

  - Longitudinal Beam Fabrication Requirements - In the end-builder construction concept, the longitudinal beam builders provide the driving force to index the satellite structure, while performing their basic function of beam-element fabrication. This end builder characteristic leads to the necessity for certain requirements, shown in Figure 12-55, regarding beam builder performance. Those requirements identified to date are:

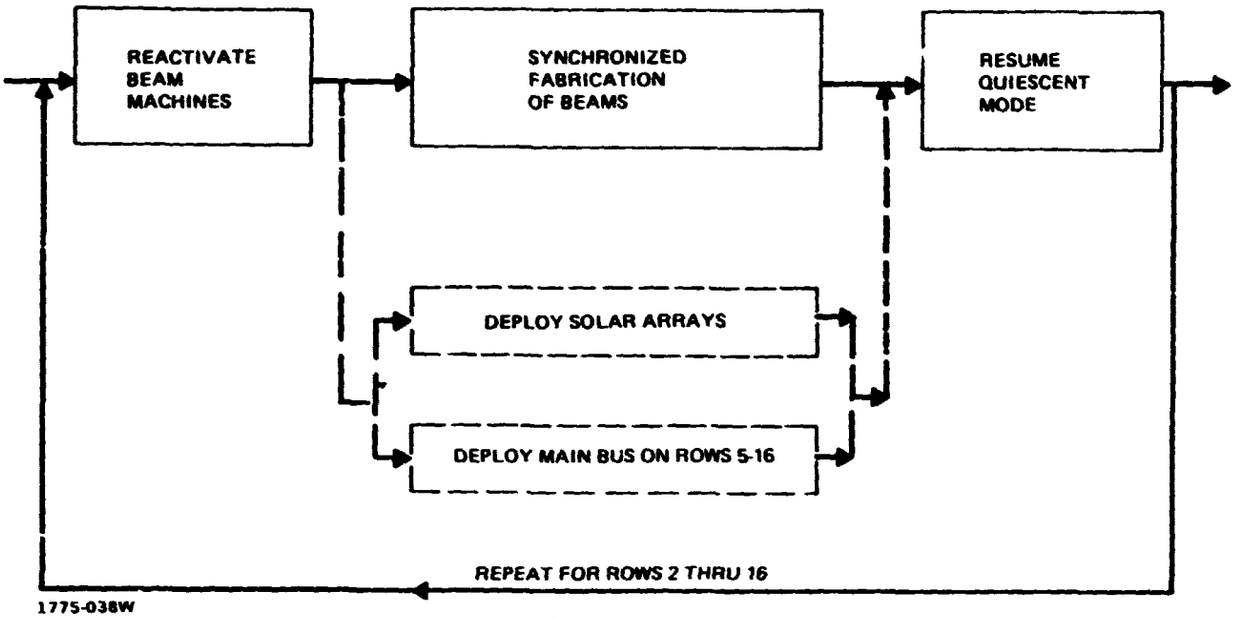

Figure 12-53 Fabricate Continuous Longitudinal Beams (3.1.1.5)

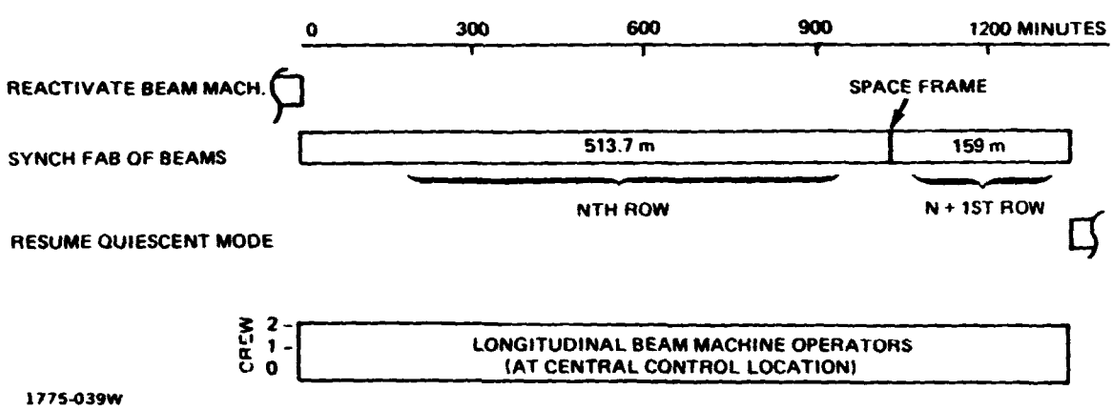

Figure 12-54 Fabricate Continuous Longitudinal Beams (3.1.1.5)

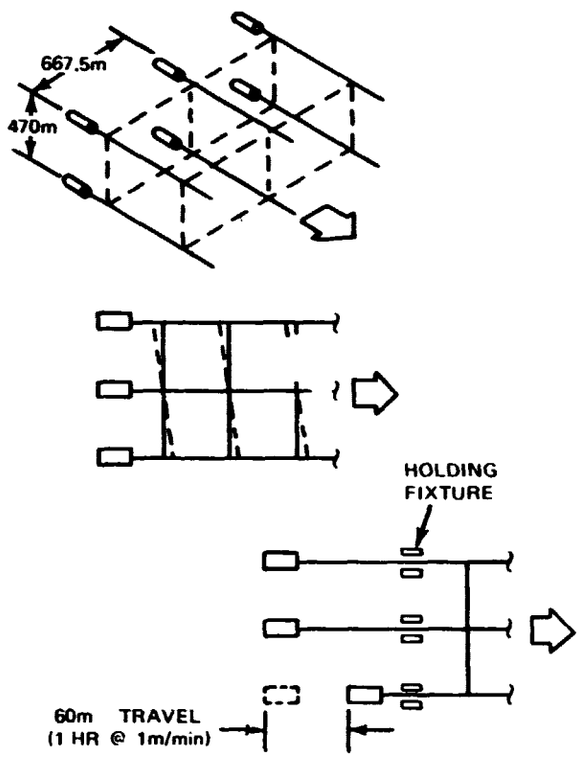

LIMIT STARTUP & SHUTDOWN ACCELERATIONS

ISSUES FOR STUDY:

- LOADING COND'S. (C.G. OFFSET, S/A TENSION, ETC)
- IMPACT OF LOADS ON:
  - BASE & SATELLITE STRUCTURE
  - BEAM-BUILDER S/S OPERATION
- CENTRALIZED CONTROL

PROVIDE FOR SYNCHRONIZED INDEXING

- CONTROL TOLERANCES GENERATE BASE-SATELLITE INTERFACE LOADS
- CENTRALIZED CONTROL

PROVIDE FOR CONTINUITY OF CONSTRUCTION OPS

- RELIABILITY/REDUNDANCY
- 60 MIN REPAIR TIME
- ON LINE/OFF LINE MAINTENANCE & REPAIR

1775-40W

Figure 12-55 Longitudinal Beam Fabrication Requirements

1. Limit startup and shutdown accelerations to insure that beam builder subsystem machinery will safely sustain forces induced during indexing. Include the effect of the progressive mass increase in the energy conversion system structure under construction.
2. Provide for synchronized indexing. Tolerances in the simultaneously operating beam builders produce variations in beam builder forces during indexing. These variations shall be limited to safe levels as determined by allowable forces not only on subsystem machinery but on the construction base and energy conversion system structure as well.
3. Design for construction continuity in the event of a beam builder failure. Emphasis shall be placed on reliability of subsystem machinery including redundant operating modes, where possible, to avoid beam builder shutdown. In addition, consideration shall be given to subsystem designs that provide repair/replacement capability within 1 hour, while the shutdown beam builder tracks along at the same rate as the indexing structure. Holding fixtures to facilitate on-line/off-line maintenance and repair shall also be considered.

It should be noted that the above requirements for limitation of accelerations and for synchronization apply to any base assembly function where simultaneity of operation is critical, including the use of multi-indexers driving simultaneously to propel the base during indexing operations. For all such functions, centralized control is necessary to limit locomotion forces to acceptable values.

- Synchronized Indexing - Control tolerances in the simultaneously operating longitudinal beam machines generate interface loads between the base and satellite as a function of the satellite's structural stiffness. If one of the beam machines has a slightly higher output rate than the rest, this rate difference can be seen as a difference in beam length and can be treated as a deflection induced on the satellite structure.

  A preliminary study of beam synchronization requirements suggests that the control technique presently used within the beam machine itself to synchronize the 3 cap rates can also be used to control multiple machines by increasing the number of feedback control loops to include all caps in those machines operating simultaneously. Assuming tolerance levels achieved to

date in the GAC/MSFC (NAS 8-32472) beam builder, estimates of beam length differences between machines are derived and shown in Figure 12-56. The induced loads shown are based on deflections imposed on an elastic structure idealized in the curve also included in the figure. (Beam properties used were E = 20,000,000 PSI and A = 3.75 in^2.) Preliminary load values computed are parametrically based on the frequency (7.5 m, 5.0 m, 2.5 m) with which recalibration checks in the control system are performed. For example, a slotted hole spacing of 7.5 m along the caps limits the accumulation of error in the encoder device to .533 cm max. This deflection produces a maximum load of 2670 newtons which, for the present, is well under the 13000 N allowable.

It should be noted that the effects of thermal gradients in the construction base, which are a necessary consideration in this kind of analyses, have not been included.

- Satellite Construction Support - Prior to longitudinal beam fabrication, two track mounted indexers were attached to the bottom of the energy conversion system structure, as shown in Step 1 of Figure 12-57. In Step 2, the fabrication of the longitudinal beams provides the necessary forces to balance any induced end loads and index the partially completed structure longitudinally while simultaneously the track mounted indexers balance any induced shear loads. When longitudinal beam fabrication is completed and the structure comes to a stop, the indexers remain attached to react any shear loads induced during the assembly of the structural row. When the structural row is completed, an additional set of indexers is attached to the structure at the inboard position, as shown in Step 3 and the outboard indexers are detached.

- End Builder Longitudinal Beam Production Capability - In order to satisfy the ground rule which limits GEO assembly of the 5GW satellite to 6 months, it was necessary to operate with skeleton crews, use minimal equipments and slow the operating rates of on-line beam machines. The impact on total satellite construction time is shown in Figure 12-58 as a function of longitudinal beam fabrication rate. As shown therein, a significant reduction in overall construction time can be realized by simply operating these on-line machines a little faster, such as at 3.5 meters per minute rather than the 0.5 meters per minute as shown at 180 days. It is not efficient to operate

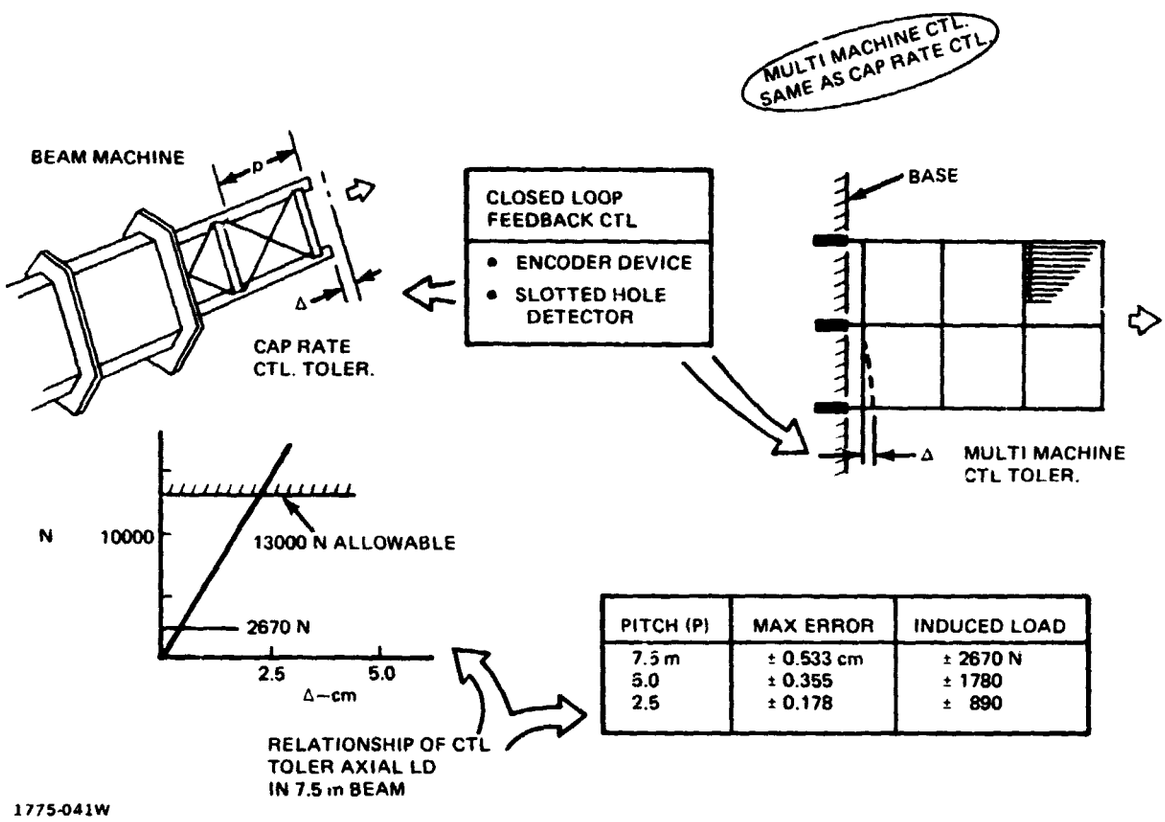

PITCH (P)	MAX ERROR	INDUCED LOAD
7.5 m	± 0.533 cm	± 2670 N
5.0	± 0.355	± 1780
2.5	± 0.178	± 890

Figure 12-56 Synchronized Indexing

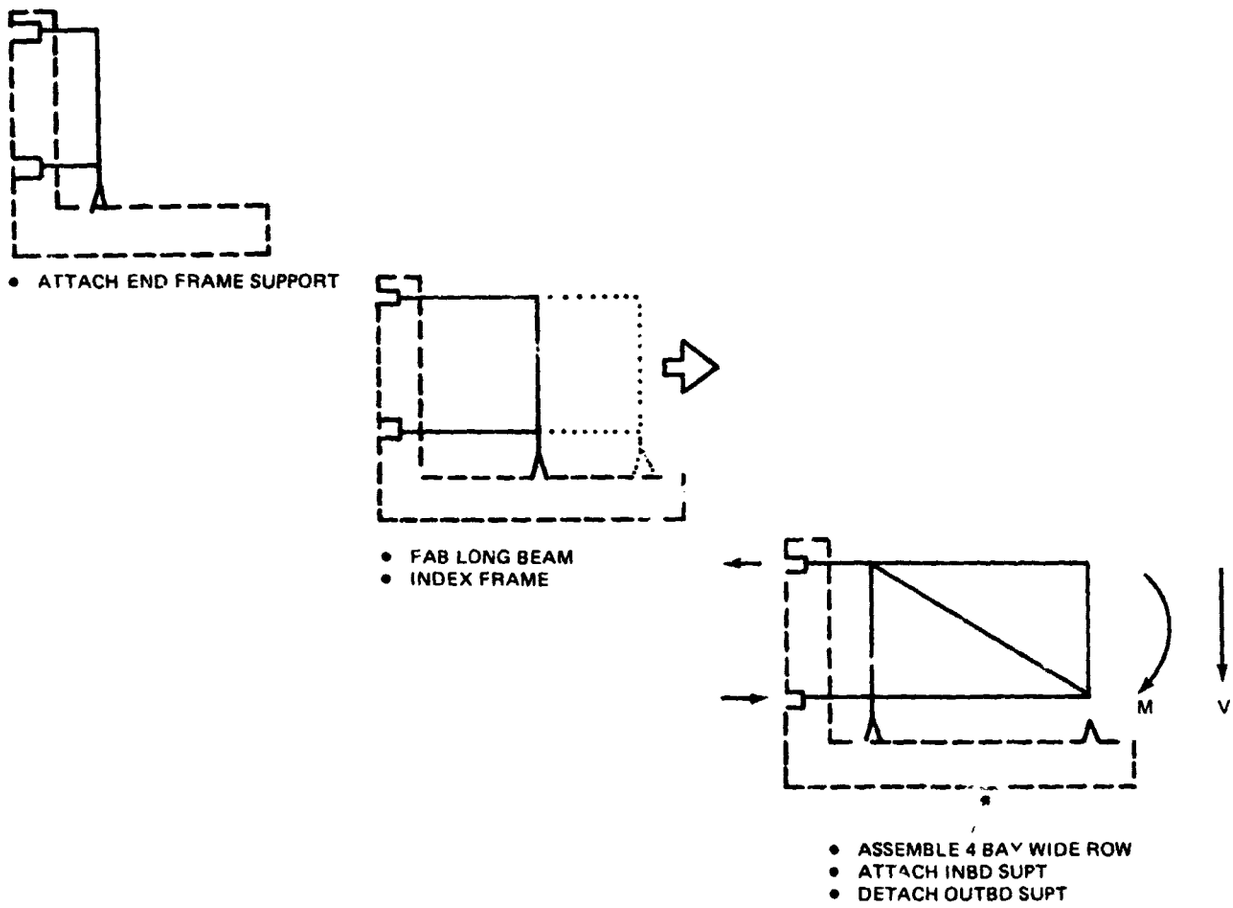

1775-042W

Figure 12-57 Satellite Support During Initial Construction

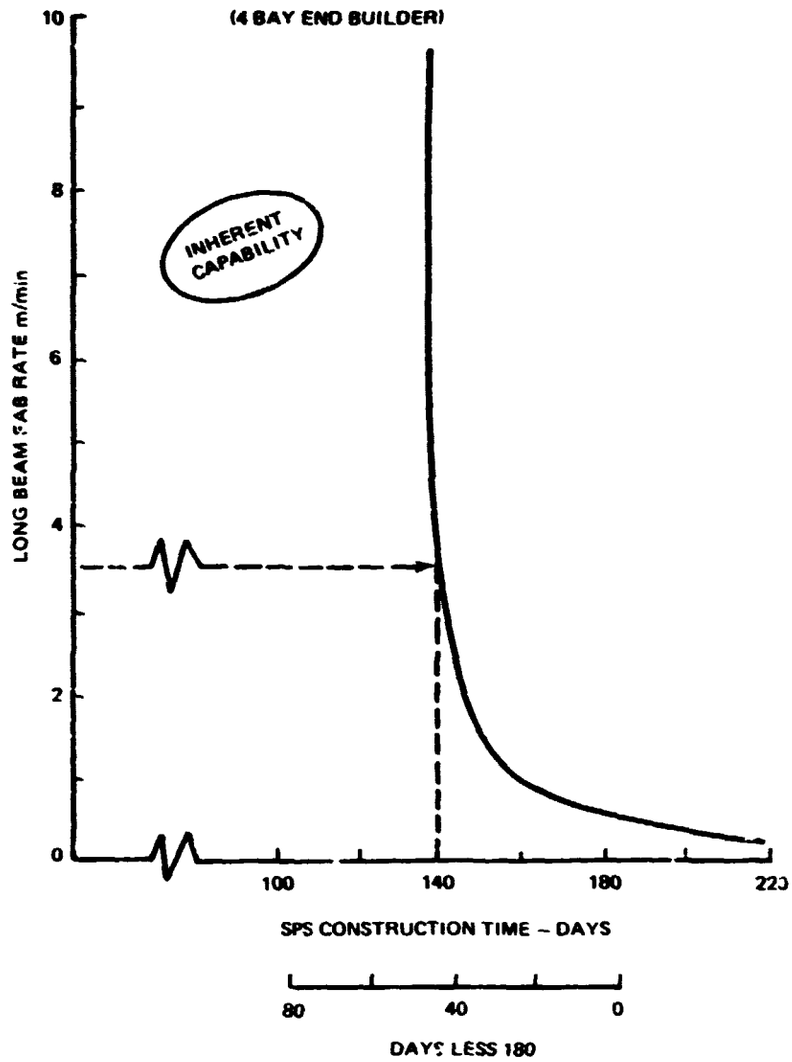

1775-043W

Figure 12-58 Long Beam Production Capability

these machines at much higher rates since other construction operations are constrained by limited crews and equipments (e.g., for solar array hook up).

- Fabricate Segmented Beams (3.1.1.6) - The fabrication of the segmented beams for the structural bays is performed according to the sequence previously shown in Figure 12-47, for the end frame beams. However, the structural bays require beams Nos. 1, 2, and 9 that are not required for the end frame, but were shown in Table 12-7. Because these beams are not in the plane of the end frame, the beam machines are required to gimbal up to 90° in pitch as well as in yaw.

- Assemble Structural Rows 1 to 16 (3.1.1.7) - As indicated by the dashed lines in Figure 12-59, before assembly of the first 4 bay row of the energy conversion system structure, it is necessary to have assembled an end frame (as previously described in Block 3.1.1.4) and fabricated longitudinal beams (as described in Block 3.1.1.5). Then, the first bay can be assembled with the beam segments fabricated in Block 3.1.1.6.

Figure 12-60 shows a portion of the energy conversion system structure. There are 306 places where the lateral, vertical, and/or diagonal beam segments are attached to the longitudinal beams. At 105 such locations, 8 beam segments are attached to the lower longitudinal beams and at 112 other locations 6 beam segments are attached to the upper longitudinal beams. Figures 12-61 and 12-62 show the location of the mobile beam machines, direction of fabrication of the beams and the paths over which the cherry pickers travel to attach the beam segments for the first bay of a 4 bay structural row. In that bay, seven beams are attached.

After assembly of the first bay, the 12.7 m beam machine gimbals 180° and the 7.5 m beam machines travel one bay laterally to attain positions for assembly of the second bay. The assembly sequence for bays 1 through 4 are given in Table 12-12. Note that times are included for the assembly of the four bays, but not for the repositioning of the beam machines. That is due to the interaction between the structure assembly and the solar array attachment, i.e., the beam machines are repositioned while the solar arrays are still being attached.

As each row of the energy conversion system is being assembled, the structure is supported by indexers under the 1st and 8th corner posts at the outboard frame station of construction base. After the row is assembled, 2

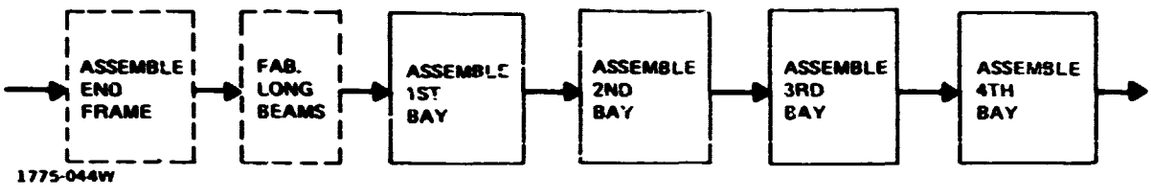

Figure 12-59 Assemble Structural Bays (Rows 1-16) (3.1.1.7)

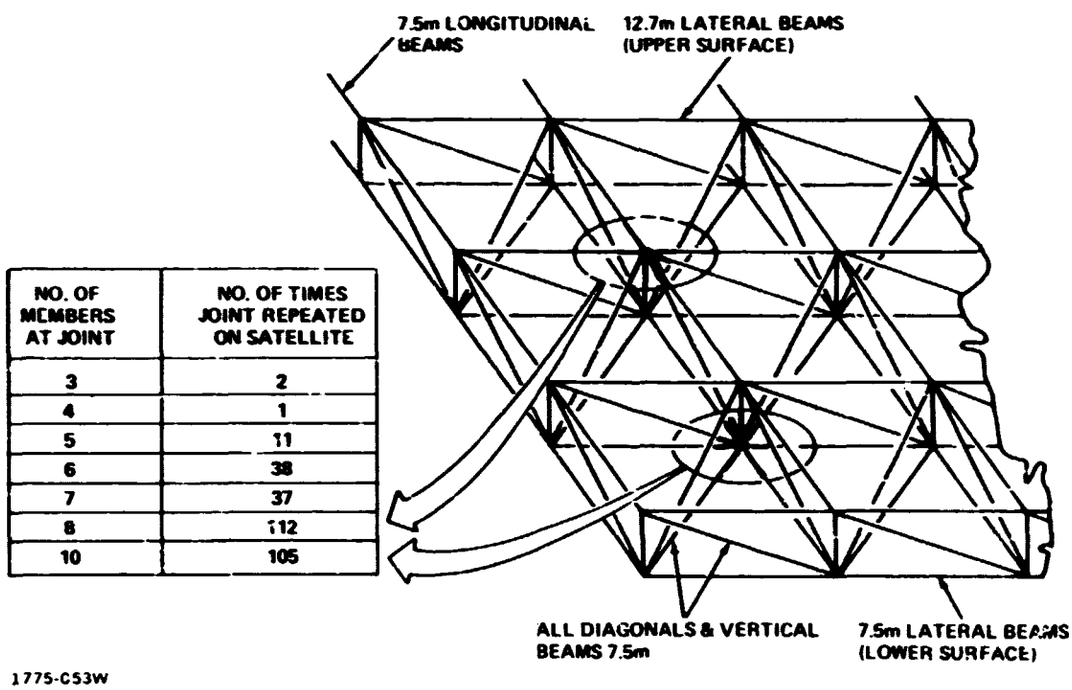

NO. OF MEMBERS AT JOINT	NO. OF TIMES JOINT REPEATED ON SATELLITE
3	2
4	1
5	11
6	38
7	37
8	112
10	105

Figure 12-60 Structural Joint Configuration

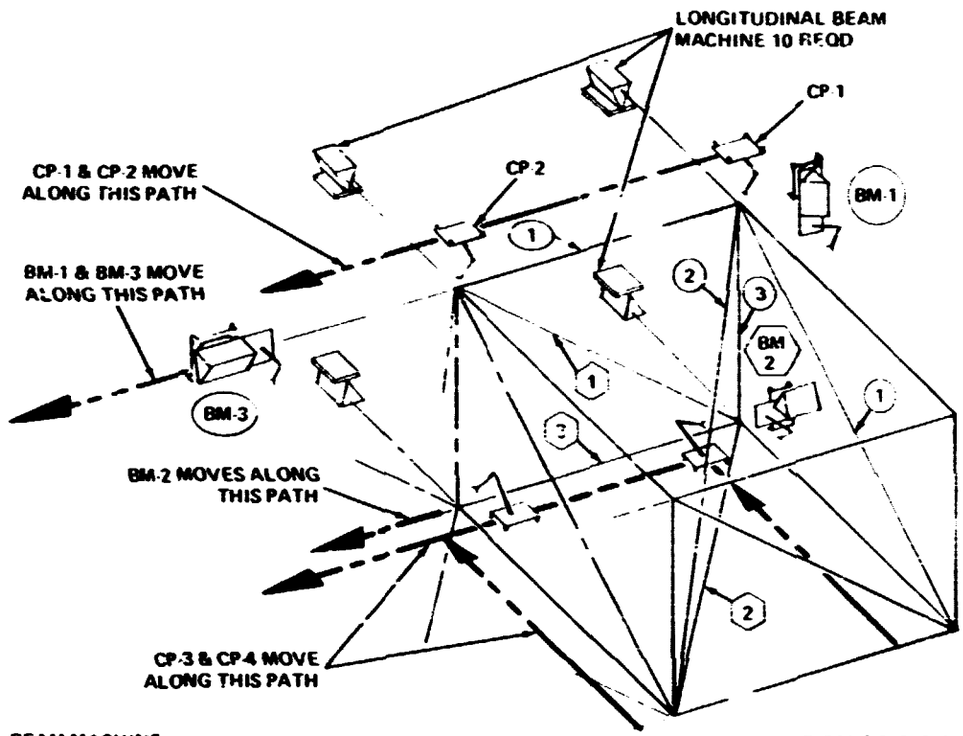

BM = BEAM MACHINE
CP = CHERRY PICKER

1775-055W

Figure 12-61 Energy Conversion Structure — Assembly Equipment & Sequence — 1st Bay

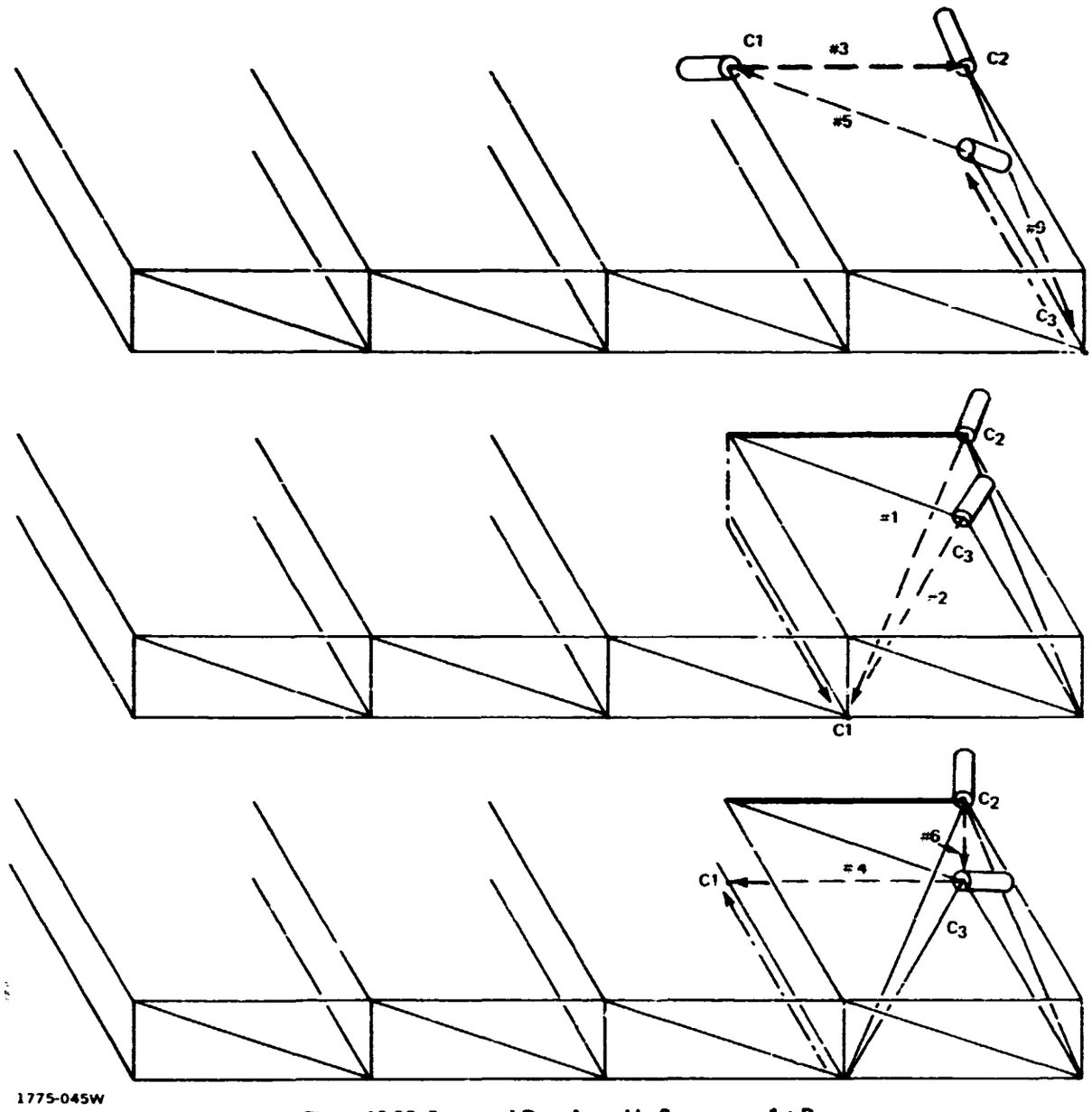

Figure 12-62 Structural Row Assembly Sequence – 1st Bay – (Repeat for Bays 2, 3 & 4)

additional indexers are positioned at the same location on the inboard frame stations, oriented for longitudinal travel, and attached to the structure to support it during subsequent longitudinal beam fabrication. Then the 2 outboard indexers are detached.

In addition to the operations for the assembly of a typical 4 bay structural row, there is also the installation of the attitude control system, which occurs concurrent with the 1st and the 16th structural rows, and the installation of feeder buses on frames 5, 9, 13, and 17.

- Utilization of Equipment & Crews - The timelines in Figure 12-63 depict the use of equipment and crews for construction of a typical 4 bay wide structural row. As in Figure 12-52 for the end frame, the use of solar array cherry picker and related manpower is also included. In addition to beams 3, 4, 5 and 6 that are required for the end frame, beams 1, 2 and 9 are also required for the structural row. For the construction of the structural rows, both 7.5 m mobile beam machines have a very high utilization rate. Aside from the 5 minutes for aiming the beam machines and the 34 minutes transfer time, the only idle time shown is the 15 minutes after transfer and before fabrication of the No. 9 beam for the second bay, by the upper 7.5 m beam machine. Conversely, the utilization of the beam installation cherry pickers is very low, especially the No. 2 cherry picker on the lower level (as was also true for the assembly of the end frame in Figure 12-52). The No. 2 cherrypicker is only used for 15 minutes to install each of the Nos. 1, 2 and 4 beams, or a total of 180 minutes during the entire 2,626 minutes for the assembly of a structural row, which provides a utilization rate of less than 8%. Here again, if the upper level cherry pickers can traverse to the lower level, the No. 2 cherry picker on the lower level can be eliminated, as can be seen by the dotted lines in Figure 12-63.

The first bay operations begin with the fabrication and assembly of the solar array lateral (beam No. 3) and end with the completion of the installation of the solar arrays at T = 708 min. Although there is an overlapping of the fabrication of the solar array lateral beam for the second bay, beginning at T = 607, as shown by the dashed lines, the second bay would end with the completion of the installation of the solar arrays at T = 1315 min. Likewise, the third bay would end at T = 1922 min. The installation of the solar arrays for the fourth bay would be completed at T = 2529 min., but an

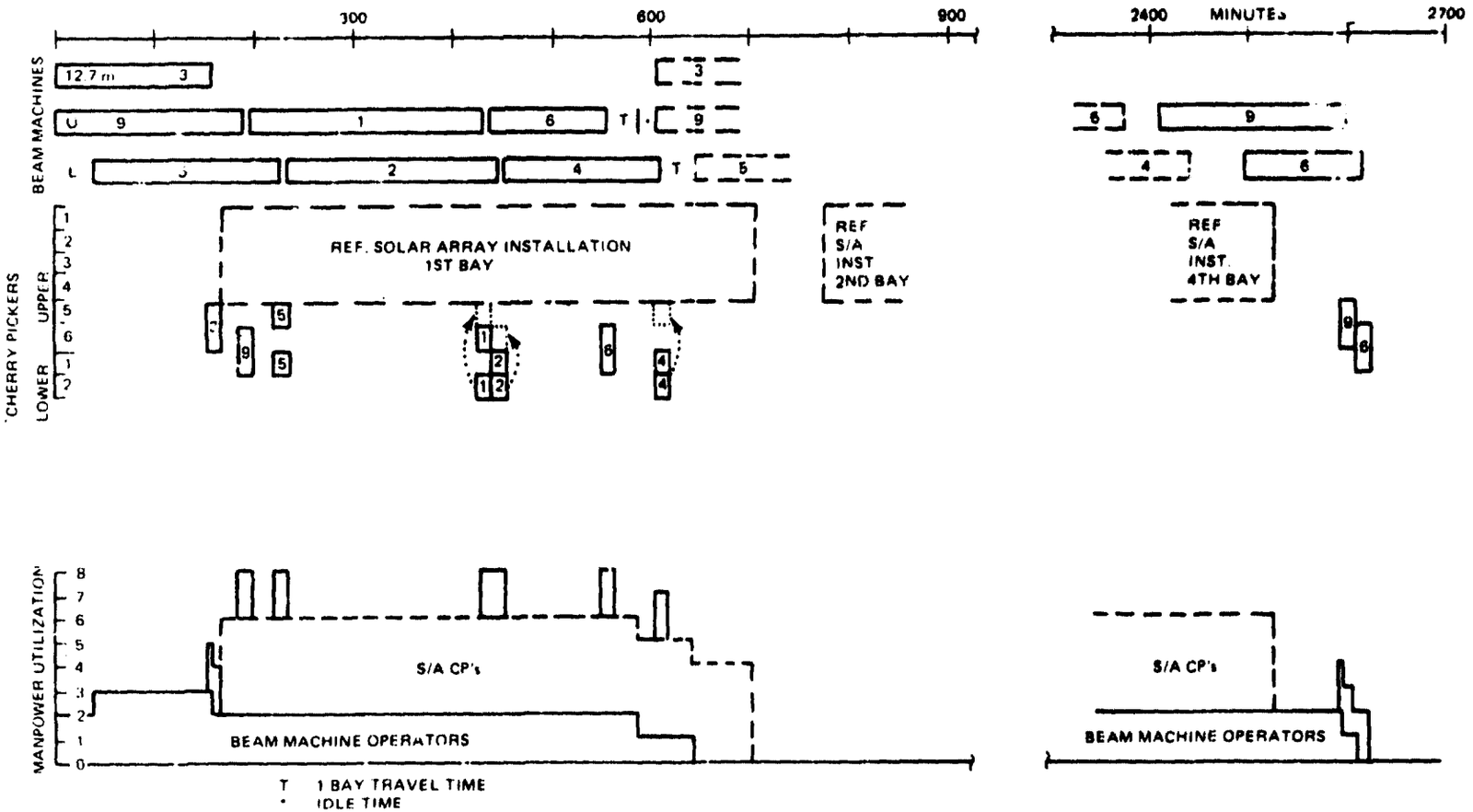

1775-103W

Figure 12-63 Fabrication & Assembly Timeline (Structural Row)

additional No. 6 and No. 9 beam are required to complete the fourth bay, as shown by solid lines at the right of the timelines. The entire four-bay row is completed at T = 2626 minutes.

- Secure for Indexing Operations (3.1.1.8) - After completing the first structural assembly pass the 4 bay wide energy conversion module must be supported for indexing and construction equipment must be removed and stowed. Construction base indexers are used to transfer the energy conversion module to its proper location for the second construction pass. In the normal sequence of assembly operations 2 indexers are attached to the bottom of each structural frame when built and the indexers attached to the preceding frame are removed. The attached indexers provide support during the longitudinal beam fabrication and the assembly operations for the next structural row. Figure 12-64 shows those indexer operations for the 16th structural row and the sequence of operations performed in preparation for indexing.

  As shown in Figure 12-65, one indexer is attached to the 17th frame, but contrary to the usual procedure the indexers on the preceding frame are not removed. When all other construction operations (solar array and bus installation, thruster attachment, etc.) are completed and verified for the last structural row each longitudinal beam is severed close to the last frame, as illustrated in Figure 12-66. Severing each beam close to the last frame instead of near the beam machine minimizes lateral index clearance requirements and reduces the initial beam fabrication operation for the second pass.

  After the longitudinal beams are severed, the attached indexers are synchronized in preparation for longitudinal indexing to provide clearance between the ends of the severed beams. While the indexers are being synchronized, two outer longitudinal beam machines are released from synchronized operations, shut down, and stowed out of the way since they are not used during second pass operations. Then they are removed from their normal operating locations to provide clearance for the indexing operations. After the indexer synchronization is completed, the 4 x 16 bay module is indexed longitudinally and other construction equipment is shut down and removed to secure locations for the duration of the indexing operations.

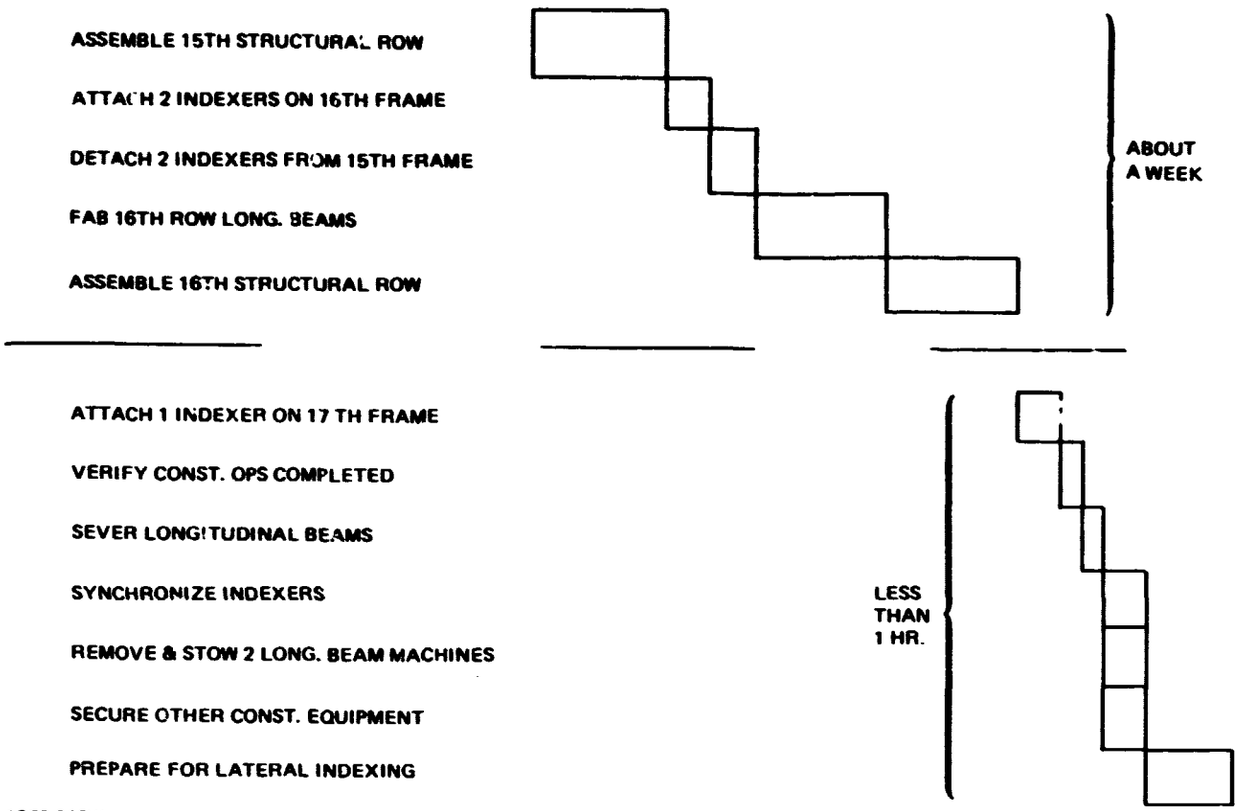

Figure 12-64 Preparation For Indexing Operations

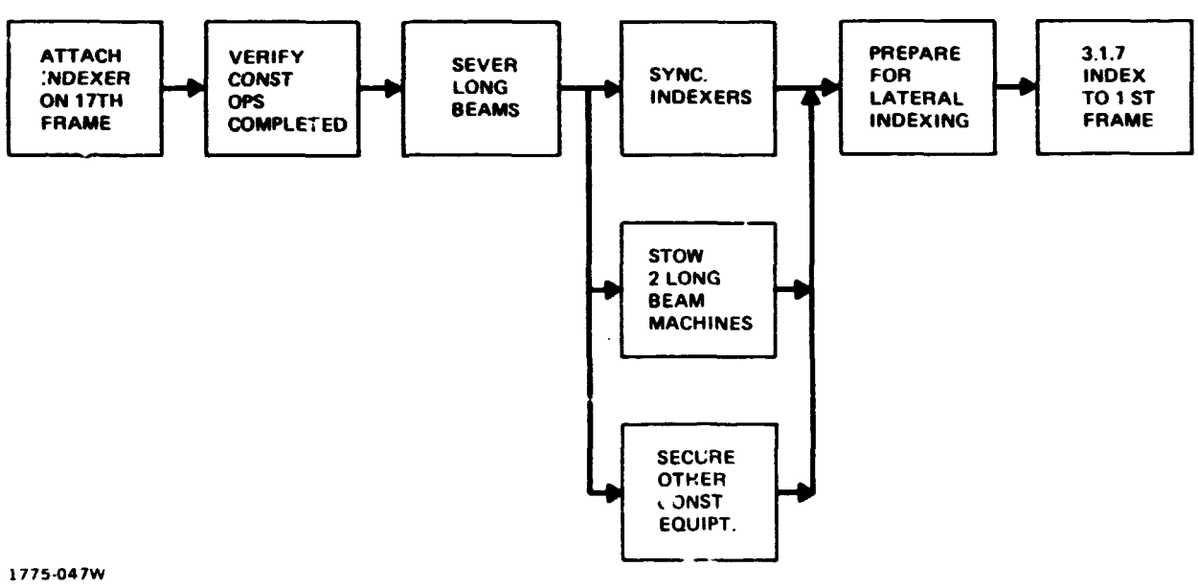

Figure 12-65 Secure for Indexing Operation (3.1.1.8)

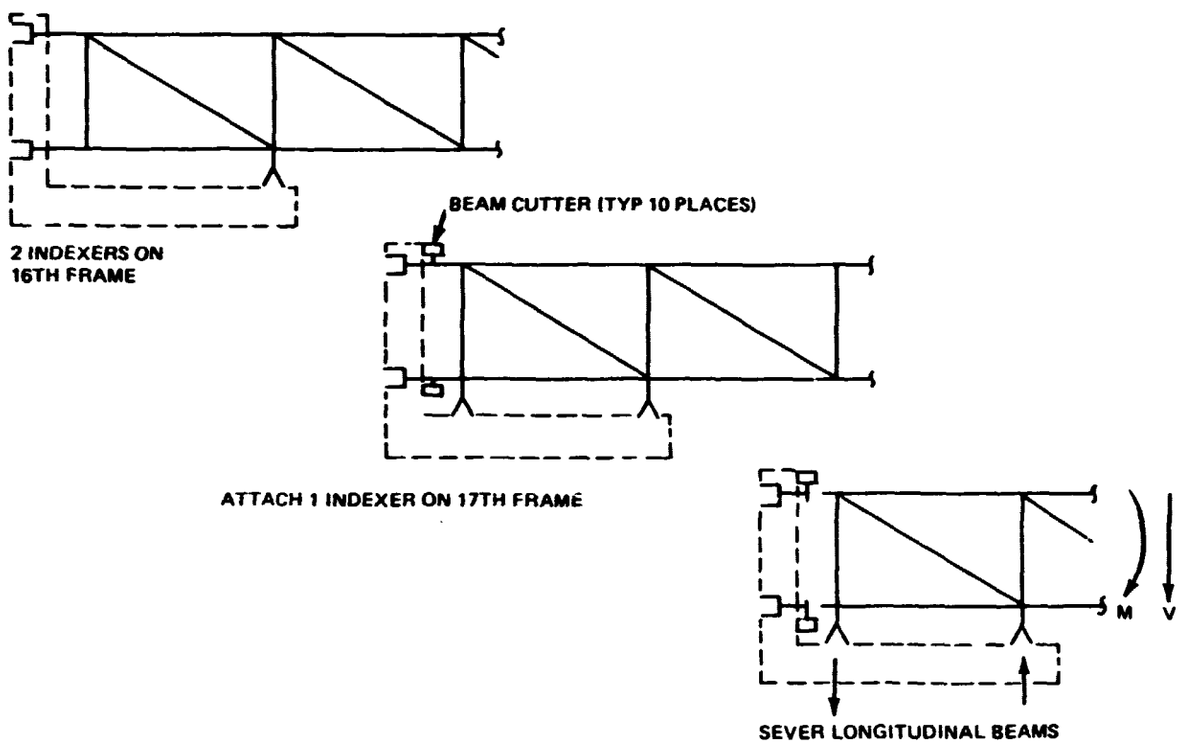

1775-048W

Figure 12-66 Beam Cutter Operations

3.2.2 Install Solar Array Blanket Strings

Figure 12-67 illustrates the generic sequence used for the assembly of the solar array blanket strings for the energy conversion system of the SPS and their integration into the structural framework and the power distribution network.

3.2.2.1 Solar Array Blanket Installation Requirements - The solar energy collectors for the 5 GW Solar Power Satellite are glass-encapsulated single-crystal silicon cells, mounted in a 14 cell by 16 cell matrix to form the 1.059m by 1.069 m solar array panels. These panels are joined together to form solar array blankets, 14 panels (14.9m) wide and 611 panels (656m) long with catenary cables on each end for attachment to the 12.7m lateral beams of the energy conversion system structure. The 611 panels of each of the 14 separate strips of the solar array blanket are electrically interconnected but isolated from the adjacent strip. Each end of the 14 strips is connected to a No. 12 aluminum wire and the 14 wires at the ends of the blanket are intertwined to form pigtails for electrical interface with other blankets or with acquisition buses.

The solar array blankets are manufactured on earth, folded like an accordion, packaged in blanket containers and installed in 22-blanket container magazines for transportation to GEO and subsequent installation on the Solar Power Satellite.

As shown in Figure 12-68, 44 blankets are installed within each bay of the energy conversion system and each blanket is preloaded to 61.5 N. The blankets are connected in series by interbay jumpers to form 4-blanket strings, mounted between the first and fifth upper lateral beams of every 4 rows. Pairs of 4-blanket strings are connected in series by jumper buses on the 1st, 5th, 9th and 13th frames to form 8-blanket strings, which are connected to positive and negative acquisition buses on the 5th, 9th, 13th, and 17th frames.

3.2.2.2 Solar Array Installation Approach - The end builder concept utilizes a two phase operations approach, which couples solar array blanket installation operations to related operations for the assembly of the energy conversion system structure. As shown in step 1 of Figure 12-69, while the structure is stationary and the lateral beam segments are being fabricated and installed, the solar array blanket containers are being mounted on the proximal anchors and the distal catenaries of the blankets are being attached to the N-th 12.7m upper lateral beam. In step 2, while the continuous longitudinal beams are being fabricated and the structure is being indexed outward, the solar array blankets are being deployed. When the longitudinal beam fabrication stops and the structure is again stationary in step 3, the proximal catenaries of the

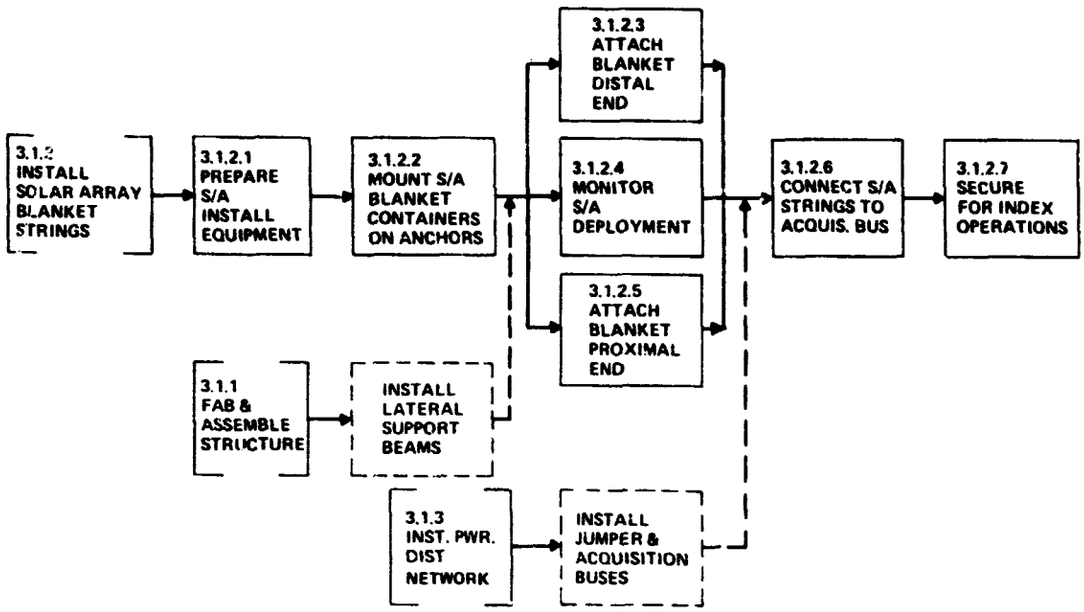

1775-082W

Figure 12-67 Energy Conversion System Solar Array Installation Flow

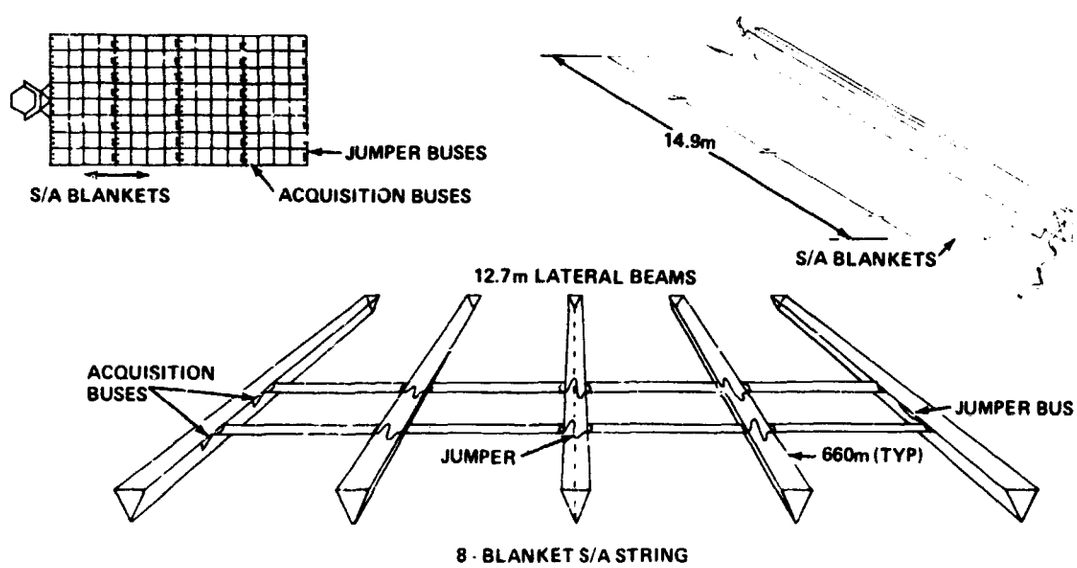

- ACCORDIAN FOLDED SOLAR ARRAY BLANKETS
  - ATTACHED CONCURRENT W/SEGMENTED BEAM FAB
  - DEPLOYED CONCURRENT W/LONG. BEAM FAB
- 44 BLANKETS/BAY, EACH TENSIONED @ 61.5N
- BLANKETS JOINED BY JUMPERS & JUMPER BUSES
- 8-BLANKET STRINGS CONNECTED TO ACQUISITION BUSES

1775-081W

Figure 12-68 Solar Array Installation Requirements

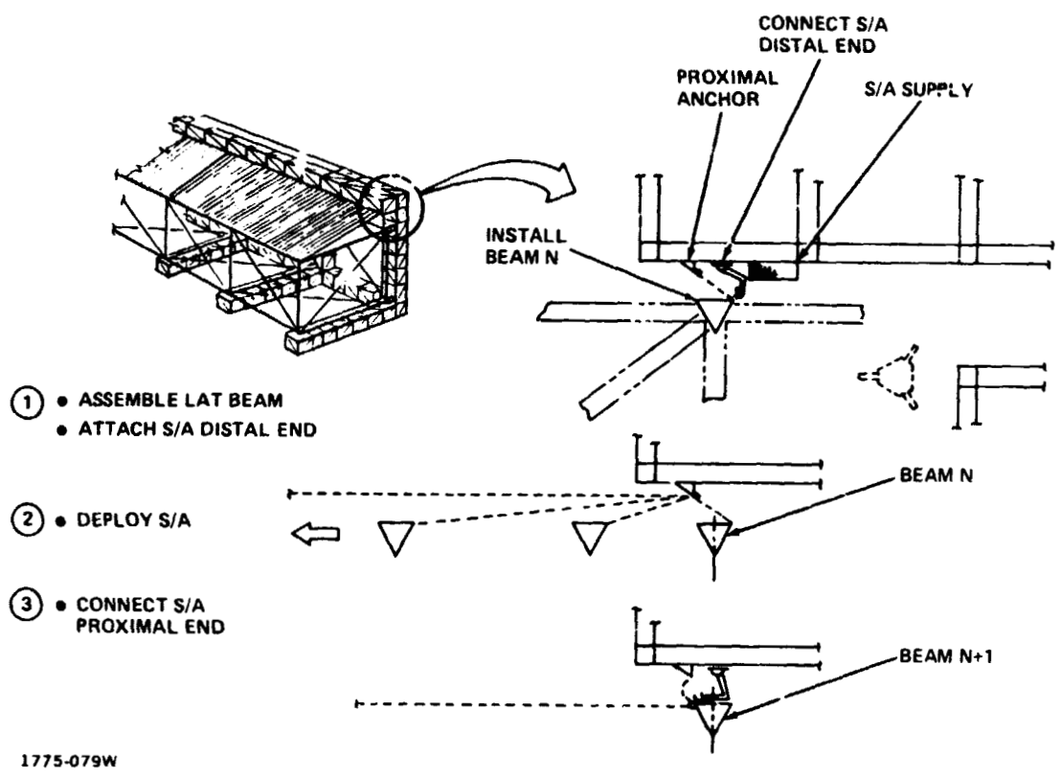

Figure 12-69 Coupled Frame Assembly/Solar Array Deployment

solar array blankets are removed from the anchor and attached to the N+1st lateral support beam.

The operations required for mounting the blanket containers and attaching the catenaries are performed by two cherry pickers. Figure 12-70 depicts the initial operations for deploying the solar array blanket from the proximal anchor on level H of the construction base. Or 14.9m wide blanket is shown deployed from level H and attached to the upper lateral beam of the satellite structure. Two carriage mounted, mobile cherry pickers are also shown beginning to deploy the next solar array blanket. The cherry pickers, located at each end of the blanket, have removed a blanket container from the supply cart and attached it to the distal anchor posts. Working in unison, they remove the distal end of the blanket from the blanket container, deploy the array down to the 12.7m beam and attach the catenary and electrical leads. Both cherry pickers will then move 15m laterally and repeat the operations for the next blanket.

In the dispensor box, panel segments are held in folded pairs by thin tapes from one end of the box to the other. The tapes, with a calibrated breaking strength, help reduce panel spillage. However, as construction proceeds, tension loads in the deployed portion of the panel increases until the load reaches the breaking point of the tape and a folded pair of panel segments is released, relieving the load. This repeated cycle causes periodic variations in panel tension. If planned or emergency factors require construction shutdown, braking loads may be sufficient to cause spillage of the stowed panel even with restraining tape. Future studies should investigate alternative dispensing concepts, for example, reel or drum mounted panels which could be controlled using established methods of braking etc.

The present 12.7m lateral beam design was sized for an earlier solar array deployment concept, which was not coupled to the fabrication of continuous longitudinal beams. Each beam was allowed to rotate about its nodal end fitting to relieve solar blanket preload bending. The rotating beam concept is not compatible with the end builder coupled solar array/structure deployment operations, since it makes solar array blanket tensioning very difficult. It is also not compatible with the installation of solar array maintenance track, particularly with respect to the lateral end members and the numerous track cross-over connections. It is recommended that further study be devoted to alternate beam design concepts with different end fixities.

A description of the sequence of operations required for installing the solar array blankets on the energy conversion system structure and for assembling the blanket strings, which interface electrically with the power distribution system, is provided in Subsection 3.2.2.3. From the data therein, the time required for installing one blanket on the end frame, frames 2 through 16 and the 17th frame has been calculated, as shown in Table 12-13. Since 44 blankets are required in each structural bay and there are two solar array installation teams, each team must install 22 blankets per bay The time required for installing the 22 blankets per bay (with 1 minute travel time between blankets) is also shown in the table.

3.2.2 3 Solar Array Blanket String Assembly Sequence - The assembly flow in Figure 12-67 includes the preparation of the solar array blanket installation equipment (Block 3.1.2.1), the installation and deployment of the solar array blankets (Blocks 3.1.2.2 through 3.1.2.5), and the connection of the solar array blanket strings to the acquisition bus (Block 3.1.2.6). The final operation is to secure the solar array installation equipment in preparation for index operations (Block 3.1.2.7).

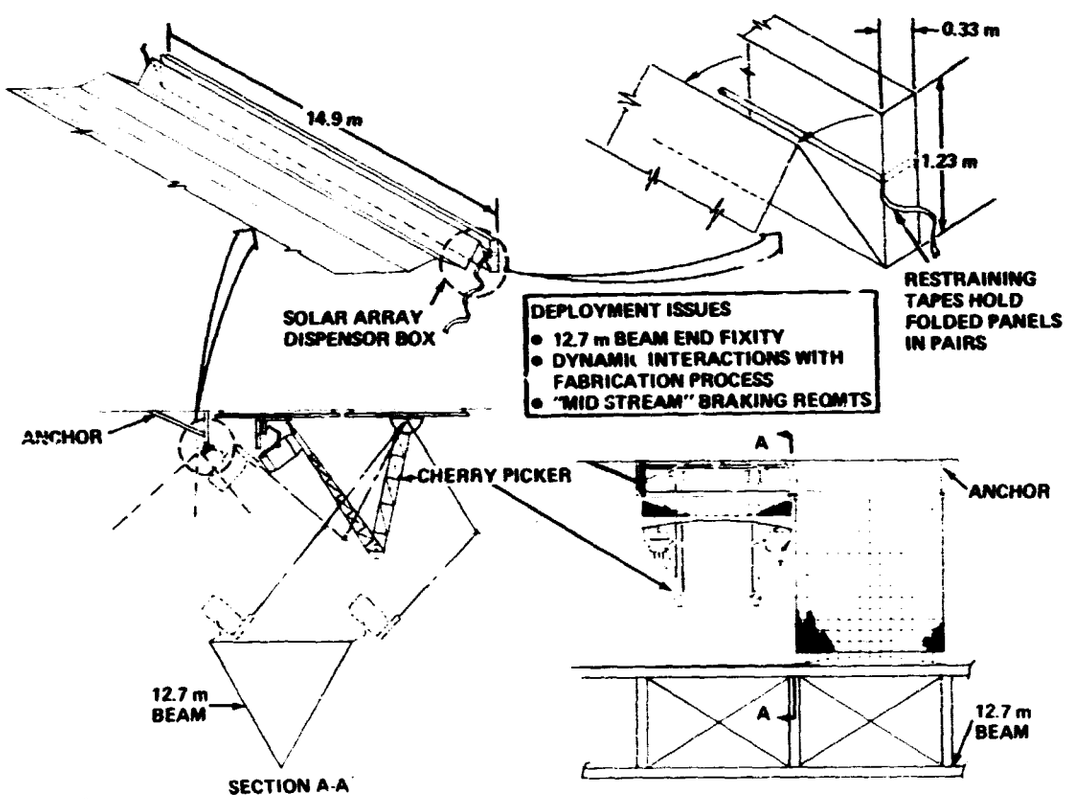

Figure 12-70 Solar Array Handling & Deployment

C-5

In performing the solar array blanket installation operations, 2 cherry pickers and an unmanned supply cart operate together as an installation team. Two installation teams operating simultaneously install the 44 solar array blankets in each of the 4 bays of any row of the energy conversion system structure. Each team installs 22 blankets in its own zone of responsibility, which consists of one-half of the 660m bay width.

TABLE 12-13. S/A BLANKET INSTALLATION TIMES

FRAME	TIME (MINUTES)	
	BLANKET	BAY *
• 1ST FRAME		
MOUNT CONTAINER ON ANCHOR	4	
ATTACH DISTAL CANTENARY	7	
TOTAL	11	263
• FRAMES 2 THROUGH 16		
ATTACH PROXIMAL CATENARY	9	
REMOVE OLD BLANKET CONTAINER	4	
MOUNT NEW BLANKET CONTAINER	4	
ATTACH DISTAL CONTAINER	7	
TOTAL	24	549
• FRAME 17		
ATTACH PROXIMAL CATENARY	9	
REMOVE BLANKET CONTAINER	4	
TOTAL	13	307

* 22 BLANKETS + 21 MINUTES FOR TRAVEL

1775-114W

- Prepare Solar Array Blanket Installation Equipment (3.1.2.1) - The preconstruction functions performed in preparation for the installation of the solar array blankets is described in detail in Table 12-14. Preconstruction operations begin with the verification of the availability and readiness of the cherry pickers and supply carts to provide two installation units. Next, the cherry pickers are manned in accordance with standard Manned Remote Work Station crew transfer operations. After the supply carts have each on-loaded a blanket container magazine of 22 blankets, each installation unit proceeds to its installation zone, removes the front panels from the containers and performs a continuity check on the blankets.

  These operations are scheduled concurrent with the fabrication of the 12.7m upper lateral beam, so as to be ready for blanket installation as soon as the beam is installed.

- Mount Solar Array Blanket Containers on Anchors (3.1.2.2) - The sequence of operations required for mounting the solar array blanket containers on the proximal anchors is described in Table 12-15. As a prerequisite to the anchoring of the containers, in addition to the Block 3.1.2.1 operations, it will be necessary to remove and stow any empty blanket containers that are on the anchors.

  Anchoring the containers on the base begins with one cherry picker at each end of the container, operating independently to remove the container from the supply cart. Then one of the cherry pickers is slaved to allow coordinated control of the transfer of the container to the anchor. When the container is properly positioned on the anchor, each of the cherry pickers independently secures its end of the container.

  At the beginning of the end-frame operations, the anchors will be empty. However, for frames 2 through 16 it will be necessary to remove and stow empty containers first. Those operations are also defined at the bottom of Table 12-15.

- Attach Blanket Distal End (3.1.2.3) - The sequence of operations involved in the attachment of the distal end of the solar array blankets is given in Table 12-16. As a prerequisite, in addition to the Block 3.1.2.2 operations, it is necessary that the 12.7m lateral beam be installed. The attachment operations begin with one cherry picker at each end of the blanket grasping the snap

TABLE 12-14. PREPARE S/A BLANKET INSTALLATION EQUIPMENT (3.1.2.1)

OPERATIONS	TIME (MINUTES)	REMARKS
• VERIFY EQUIPMENT AVAILABILITY 4 CHERRY PICKERS 2 SUPPLY CARTS	TBD	} 2 INSTALLATION UNITS
• VERIFY EQUIPMENT READINESS PRE-OPERATION MAINTENANCE CHECK POWER SUPPLY C. O. LIFE SUPPORT SYSTEM C. O. EQUIPMENT SUBSYSTEMS	TBD	} CHERRY PICKERS ONLY
• MAN CHERRY PICKERS CREW TRANSFER OPERATION ACTIVATE & C. O. COMM. SYS. ACTIVATE & C. O. OTHER SUBSYS.	 5 2 10	STANDARD MRWS OPERATION SEE TABLE 12-5
• LOAD SUPPLY CART TRAVEL TO LOADING AREA ON-LOAD BLANKET CONTAINERS SECURE CONTAINERS	TBD	22 BLANKET CONTAINERS/CART
• POSITION EQUIPMENT TRAVEL TO INSTALLATION ZONE ALIGN WITH PROXIMAL ANCHOR	TBD	@ 50 MPM
• PREPARE BLANKETS FOR INSTALLATION REMOVE FRONT PANEL PERFORM CONTINUITY CHECK 1775-115W	TBD	

TABLE 12-15. MOUNT S/A BLANKET CONTAINERS ON ANCHORS (3.1.2.2)

OPERATIONS	SINGLE CP	BOTH CPs	INDEPENDENT	COORDINATED	TIME (MINUTES)	REMARKS
• PREREQUISITE OPERATIONS					N/A	
BLOCK 3.1.2.1 OPERATIONS						
REMOVE OLD CONTAINERS						DEFINED BELOW
• ACQUIRE CONTAINER					1	
SWING MRWS TO END OF CONTAINER		√	√			LATERALLY
GRASP CONTAINER		√	√			
RELEASE CONTAINER FROM CART		√	√			
• TRANSFER CONTAINER TO ANCHOR					1	
SLAVE NO. 2 CHERRY PICKER		√		√		
SWING CONTAINER TO ANCHOR		√		√		
ALIGN CONTAINER WITH ANCHOR		√		√		LONGITUDINALLY
• ATTACH CONTAINER TO ANCHOR					2	
POSITION CONTAINER ON ANCHOR		√		√		
RELEASE NO. 2 CHERRY PICKER CONTROL		√		√		
SECURE CONTAINER ON ANCHOR		√	√			
RELEASE CONTAINER FROM CPs		√	√			
TOTAL					4	
• REMOVE & STOW EMPTY CONTAINER						FRAMES 2-16
SWING MRWS TO END OF CONTAINER						LATERALLY
GRASP CONTAINER		√	√		1	
RELEASE CONTAINER FROM ANCHOR						
SWING CONTAINER TO CART						LONGITUDINALLY
ALIGN CONTAINER WITH TIEDOWNS		√	√		1	
POSITION CONTAINER WITH TIEDOWNS						
SECURE CONTAINER ON CART		√	√		2	
RELEASE CONTAINER FROM CPs						
TOTAL					4	

1775-116W

TABLE 12-16. ATTACH BLANKET DISTAL END (3.1.2.3)

OPERATIONS	SINGLE CP	BOTH CPs	INDEPENDENT	COORDINATED	TIME (MINUTES)	REMARKS
• PREREQUISITE OPERATIONS BLOCK 3.1.1.2 OPS PERFORMED 12.7 M LATERAL BEAM INSTALLED					N/A	
• ACQUIRE DISTAL CATENARY GRASP CATENARY SNAP RINGS RELEASE CATENARY FROM CONTAINER		√ √	√ √		2	
• TRANSPORT CATENARY TO BEAM SLAVE NO. 2 CHERRY PICKER SWING CATENARY TO BEAM RELEASE NO. 2 CHERRY PICKER CONTROL		√ √ √		√ √ √	1	20 M DOWN
• ATTACH CATENARY TO BEAM ATTACH SNAP RING TO BEAM RELEASE SNAP RING FROM MRWS		√ √	√ √		1	
• ATTACH ELECTRICAL LEAD CONNECT PIGTAIL PERFORM CONTINUITY CHECK	√ √				3	TO INTERBAY JUMPER OR JUMPER BUS
TOTAL					7	

1775-117W

ring of the distal catenary and releasing the catenary from its tiedown on the blanket container. Then one of the cherry pickers is slaved to allow a coordinated transfer of the catenary to the 12.7m lateral beam be installed. The attachment operations begin with one cherry picker at each end of the blanket grasping the snap ring of the distal catenary and releasing the catenary from its tiedown on the blanket container. Then one of the cherry pickers is slaved to allow a coordinated transfer of the catenary to the 12.7m lateral beam. The cherry pickers will independently attach the snap rings to the beam and then one of the cherry pickers will connect the electrical pigtail to the interbay jumper or jumper bus, as required.

- Monitor Solar Array Deployment (3.1.2.4) - After both solar array installation teams have attached the distal ends of 22 blankets on the 12.7m lateral support beams in all 4 bays of any structural row of the Energy Conversion System in Block 3.1.2.3, solar array installation operations halt while the 10 synchronized longitudinal beam machines fabricate another 672.7m of the longitudinal beams, in accordance with Block 3.1.1.5 operations. During those fabrication operations, the longitudinal indexing of the structure causes the deployment of the attached solar array blankets. That blanket deployment must be constantly monitored to detect potentially hazardous conditions, such as excessive meandering of the blankets or excessive blanket tension. In the event such hazards occur, the blanket deployment rate will automatically be decreased, even to a complete stop if necessary, to prevent blanket damage, as shown in Table 12-17.

TABLE 12-17. MONITOR S/A DEPLOYMENT (3.1.2.4)

OPERATIONS	REMARKS
• PREREQUISITE OPERATION	
BLANKET DISTAL ENDS ATTACHED	BLOCK 3.1.2.3
S/A BLOCKETS BEING DEPLOYED	CONTROLLED BY LONG. BEAM FAB.
• WATCH FOR LATERAL DRIFT	AUTOMATIC CONTROL LOOP
OBSERVE POINTS ON FAR LATERAL BEAM	
DETECT BLANKET MEANDERING	
DECREASE BEAM FAB RATE	IF MEANDERING IS BEYOND TBD VALUE
STOP FAB IF NECESSARY	
• CONTROL TENSION ON BLANKETS	AUTOMATIC CONTROL LOOP
MONITOR TENSION GAUGES	
DECREASE BEAM FAB RATE	IF TENSION IS BEYOND TBD VALUE
1775-118W	

- Attach Blanket Proximal End (3.1.2.5) - After the solar array blankets have been fully deployed and the 12.7m beams for the next structural row have been attached, the proximal ends of the S/A blankets will be attached, as described in Table 12-18. Acting independently, each cherry picker grasps a catenary snap ring and then releases the catenary from the blanket container. Then one of the cherry pickers is slaved to allow coordinated control of the transfer of the proximal catenary to the 12.7m beam, where the snap rings are attached and the blanket is tensioned to the required value. Finally, one cherry picker connects the pigtail to the interbay jumper, or acquisition bus, as required.

- Connect S/A Strings to Acquisition Buses (3.1.2.6) - Figure 12-68 shows the mechanical interface between the solar array blankets and the energy conversion system structure and the electrical interface with the power distribution system. Mechanically, the installation of all solar array blankets is the same and 44 blankets are deployed in each structural bay. Electrically, the connection of the blankets varies, depending on what the pigtails connect to. On the end frame, the pigtails all connect to jumper buses. On frames 5, 9 and 13, proximal catenary pigtails are attached to acquisition buses and distal catenary pigtails are attached to jumper buses. On the 17th frame, the pigtails connect to acquisition buses. For all other frames, the distal and proximal pigtails are connected by means of interbay jumpers. These jumpers and buses are all installed on the 12.7m lateral beams during beam fabrication and are ready for pigtail connection as soon as the beams are installed.

  Using jumper buses on frames 1, 5, 9 and 13 permits 8-blanket strings to be connected across each 4-row section. Row 1 operations install 2 blankets that are connected via the jumper bus. Row 2 operations add 2 more blankets that are connected to the previous 2 via interbay jumpers, thus lengthening the string to 4 blankets. Row 3 operations are identical to Row 2 and lengthen the string to 6 blankets. The distal pigtails of the two blankets installed in Row 4 operations are connected via interbay jumpers to the blanket string, lengthening it to eight blankets and the proximal pigtails are connected to the acquisition buses. (Although not essential to the solar array blanket installation operations, the acquisition buses lead into lateral feeder buses which in turn lead into the main bus.)

TABLE 12-18. ATTACH BLANKET PROXIMAL END (3.1.2.5)

OPERATIONS	SINGLE CP	BOTH CPs	INDEPENDENT	COORDINATED	TIME (MINUTES)	REMARKS
• PREREQUISITE OPERATIONS S/A BLANKET FULLY DEPLOYED 12.7 M LATERAL BEAM ATTACHED					N/A	DURING LONG BEAM FAB BLOCK 3.1.1.4
• ACQUIRE BLANKET SWING MRWS TO END OF ANCHOR GRASP CATENARY SNAP RING RELEASE CATENARY FROM CONTAINER		 √ √ √	 √ √ √		2	5 M LATERALLY
• TRANSPORT CATENARY TO BEAM SLAVE NO. 2 CHERRY PICKER SWING CATENARY TO BEAM RELEASE NO. 2 CHERRY PICKER CONTROL		 √ √ √		 √ √ √	1	20 m DOWN
• ATTACH CATENARY TO BEAM ATTACH SNAP RINGS TO BEAM RELEASE SNAP RING FROM MRWS		 √ √	 √ √		1	
• TENSION CATENARY		√	√		2	TO TBD VALUE
• ATTACH ELECTRICAL LEAD CONNECT PIGTAIL PERFORM CONTINUITY CHECK	 √ √				3	TO INTERBAY JUMPER OR ACQUISITION BUS
TOTAL					9	
1775-119W						

- Secure for Index Operations (3.1.2.7) - After the full 4 bay wide, 16 row long, 1st pass Energy Conversion System module is completely assembled, the construction base is indexed to its proper location for initiating second pass operations. In preparation for the index operations, all construction operations stop and the construction equipment, such the solar array cherry pickers and supply carts, are removed to a secure area to prevent interference with the index operations.

3.2.3 Install Power Distribution Network

The generic sequence of operations for the assembly of the energy conversion system power distribution network is shown in Figure 12-71.

3.2.3.1 Power Distribution Network Installation Requirements - The power distribution network is comprised of the main and feeder buses shown in Figure 12-72 and their interface with the power collection system together with the associated maintenance track system, shown in Figure 12-73.

The main and feeder buses are supported next to the satellite vertical beams beneath any intersecting diagonal or cross bracing structure. Support of the bus arrays is achieved using cables tensioned to compensate for thermal variations and provide preload to maintain the natural frequency of the bus array above that of the satellite.

The acquisition and jumper buses are attached to opposite sides of the lateral beams just below the cap members. The switch gear assemblies are supported on platforms attached to the lower cap member and braced with additional members from the upper cap members. Connections are made from the acquisition bus to the switch gear. Installation of the switch gear assemblies takes place after the beam is completed.

The maintenance concept shown provides a separate maintenance track beam underneath the solar arrays which parallels the main and feeder bus locations. This track provides a working base for bus maintenance equipment to travel upon. The requirement for a dedicated maintenance track can be satisfied by expanding upon the updated beam builder substation concept which installs solar array maintenance track during the beam fabrication process.

3.2.3.2 Power Distribution Network Installation Approach - Bus deployment operations are coupled to related operations for the assembly of the energy conversion system structure. The main bus is deployed, while the continuous longitudinal beams are being fabricated for rows 5 through 16. The feeder buses are deployed while the structure is stationary and the lateral, vertical and diagonal beam segments are being fabricated and installed for rows 4, 8, 12 and 16.

Both main and feeder power buses are supported by non-metallic cables attached to outrigger structure on the vertical beams, as shown in Figure 12-74. Placement of the cable attach points on the outriggers is planned to support the bus arrays in a plane parallel to the vertical beams at a point low enough to avoid interference with any overhead horizontal or diagonal structural members. The bus support cables are attached to strongbacks on the bus array, which serve to distribute the support cable

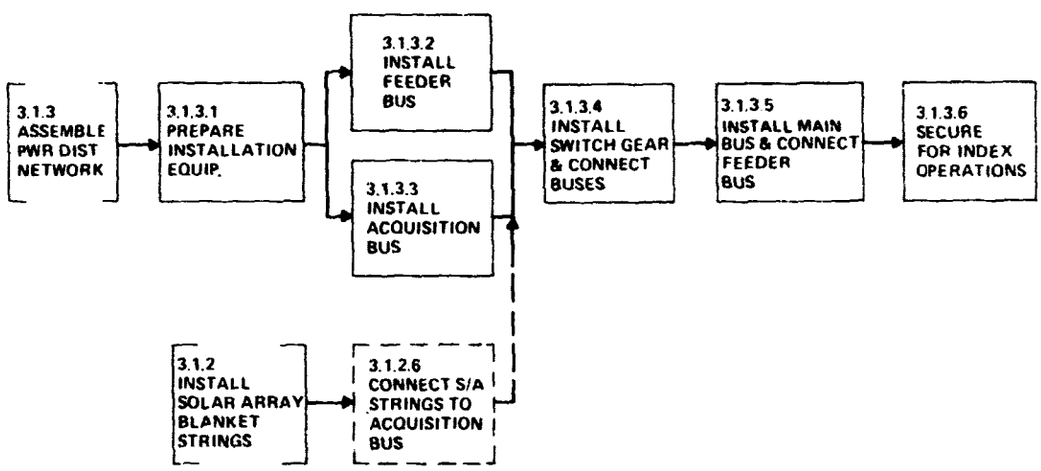

1775-083W

Figure 12-71 Energy Conversion System Power Distribution Network Assembly Flow

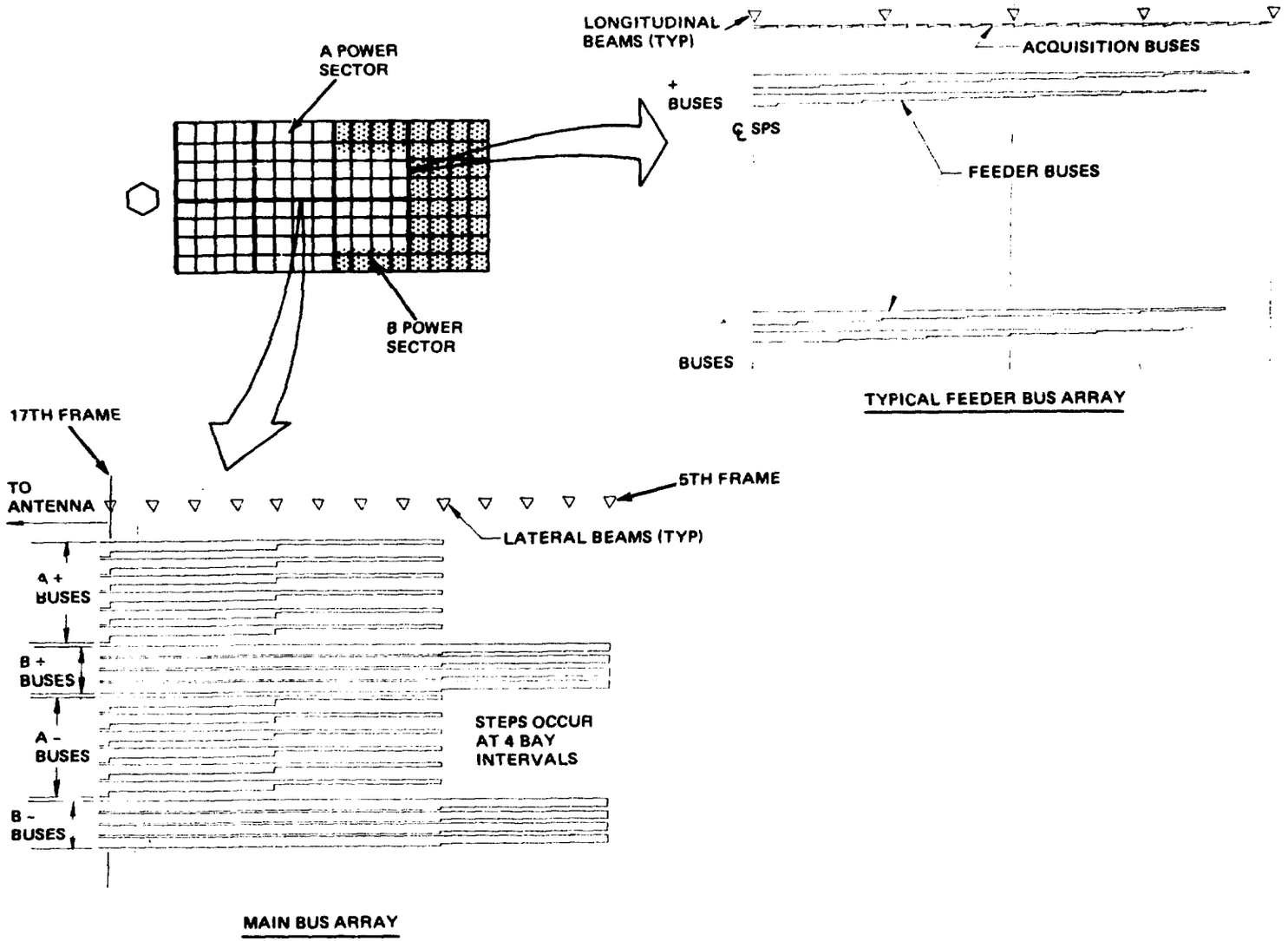

1775-104W

Figure 12-72 Power Distribution System

REPRODUCIBILITY OF THE ORIGINAL PAGE IS POOR

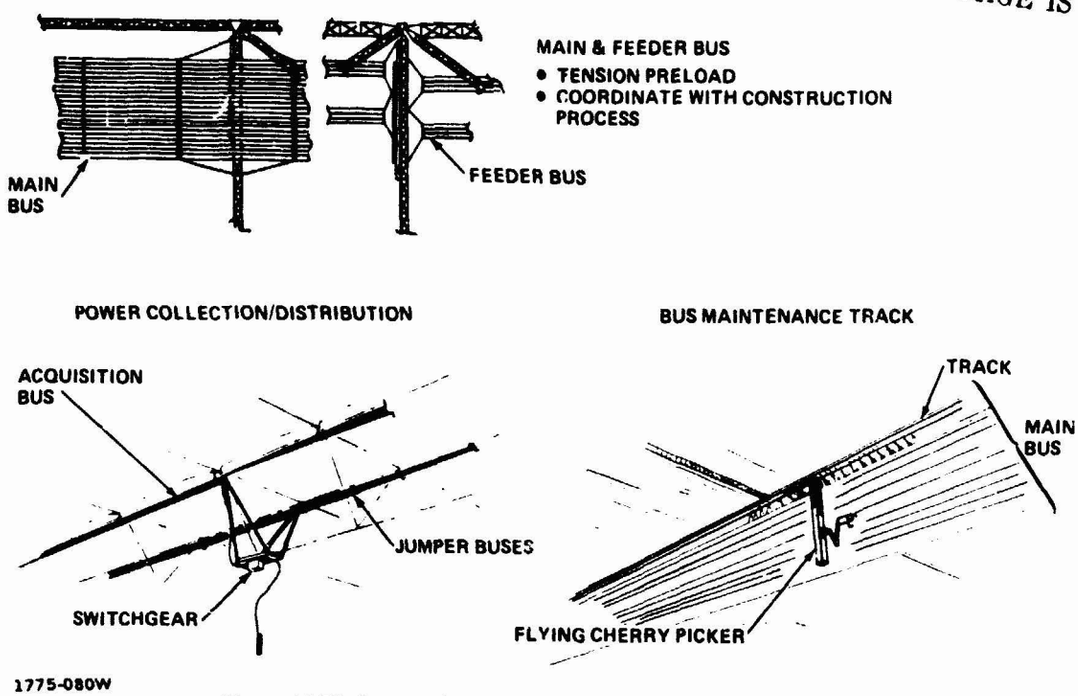

Figure 12-73 Power Distribution System Installation Requirements

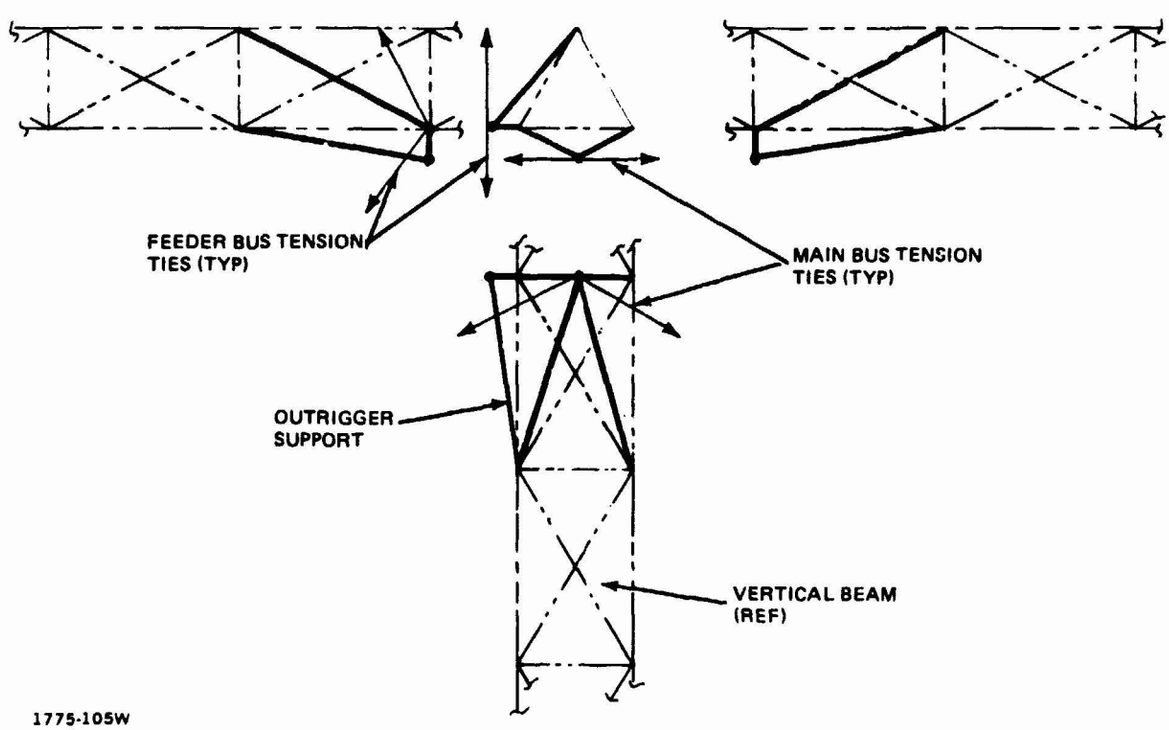

Figure 12-74 Vertical Beam With Main & Feeder Bus Supports

tension loads across the bus array so that all the component bus strips share the tension load equally. The main and feeder buses also have stiffener members across the bus strips that maintain the correct bus to bus separation, but do not provide structural support.

The feeder bus strips are supported so that an individual strip is aligned at the same level as the corresponding strip in the main bus to which it is connected. As a result, the feeder bus arrays on one side of the main bus will have a different support geometry from that of the feeder bus array on the opposite side of the main bus. An examination of feeder bus electrical requirements indicates that not all bus strips are required for the entire length of the bus array; but for structural support, each bus strip must be continuous from one strongback to the next, regardless of whether or not it is required for electrical purposes. It may also prove necessary to increase bus strip width in some instances to carry the applied tension loads between strongbacks.

In the case of the feeder buses, where relatively few bus strips are arranged at widely separated intervals, bus installations are shown with strongback support limited to groups of bus strips rather than extending across the entire array. This approach simplifies strongback handling and fabrication and is more structurally efficient. Additional outrigger supports are required to support the resulting configuration. On the side of the vertical support beam furthest from the main bus, this poses no problem as access to the beam is unrestricted. However, feeder bus access to the main bus side of the vertical member is obstructed by the main bus. In this case, access to support is provided by tension links passing from the vertical member through the main bus array in the space normally provided between bus strips. If the one-half meter space planned proves inadequate for this requirement, a larger space can be planned into the bus array as needed with negligible impact on the design. Support cables run from the tension link to the feeder bus strongback.

3.2.2.3 Power Distribution Network Assembly Flow - As shown in Figure 12-71, the assembly of the power distribution network begins with the preparation of the installation equipment in Block 3.1.3.1. The two phase coupled assembly approach used for the end builder concept requires that the acquisition and feeder buses and the switch gear be installed on the structure in Blocks 3.1.3.2 through 3.1.3.4 and be electrically connected to the solar array strings, while the lateral and diagonal structural beam segments are being fabricated and installed (Block 3.1.1.7). Conversely, the main bus is installed in Block 3.1.3.5, while the longitudinal beams are being fabricated (Block 3.1.1.5). The final operation is to secure the bus installation equipment for the indexing operations in Block 3.1.3.6.

- Prepare Bus Installation Equipment (3.1.3.1) - The preconstruction functions performed in preparation for the installation of the power distribution network are described in detail in Table 12-19. This sequence of operations begins with the verification of the availability and readiness of the construction equipment and supplies. Then the bus dispensing station is loaded and the switch gear assemblies are placed on the transporter. Prior to the completion of the installation of the first vertical beam of the 5th frame of the structure, the bus dispenser and cherrypickers are manned and positioned for deploying feeder bus.
- Install Feeder Bus (3.1.3.2) - Figure 12-72 shows a typical set of 4 feeder buses (two positive and two negative) installed on structural frames 5, 9, 13 or 17 to transmit electrical power from the acquisition buses to the main bus. There is an increase in the size of the feeder buses at six places across each of the 4 bays to compensate for the electrical power increase from the 24 acquisition buses. These feeder buses are automatically deployed by the mobile beam dispensing station and stabilized by support cables attached to the vertical beam outriggers, as described in Table 12-20.

  The feeder bus installation sequence begins with the bus dispensing station located a short distance to the side of the position at which the vertical beam for the centerline of the SPS structure is to be installed. While the vertical beam is being installed, the bus dispensing station fabricates a strongback and attaches it to the bus. After the vertical beam is installed, the strongback is connected by cables to the vertical beam outrigger. Then the bus dispensing station proceeds laterally away from the SPS centerline, while deploying the cables under tension. During subsequent bus deployment, stiffeners are fabricated and attached to the buses as required. Upon approaching the vertical beam at the end of the first bay, a second strongback is fabricated and attached to the buses. Then support cables are attached to the ends of the strongback and dispensed in parallel with the bus deployment, as the bus dispensing station continues its lateral travel. When the bus dispensing station reaches the vertical beam, the support cables are attached to the outrigger and tensioned, thus adjusting the tension on the buses. Cable/bus deployment continues as before. Shortly thereafter, another strongback is fabricated and attached to the buses. Then the bus dispensing station reverses direction, thus causing the buses to buckle and form the feeder bus flex-loop as described in

TABLE 12-19. PREPARE BUS DEPLOYERS (3.1.3.1)

OPERATIONS	TIME MINUTES	REMARKS
• VERIFY EQUIPMENT AVAILABILITY BUS DEPLOYER 2 CHERRY PICKERS 1 TRANSPORTER	TBD	
• VERIFY EQUIPMENT READINESS PRE-OPERATION MAINTENANCE CHECK POWER SUPPLY C. O. LIFE SUPPORT SYSTEM C. O. EQUIP. SUBSYSTEM	TBD	 CHERRY PICKERS
• VERIFY CONST. MATERIAL AVAILABILITY BUS STANDOFFS STIFFENERS CABLE REELS SWITCH GEAR CUT OFF SWITCHES BRACES INTERCONNECT CABLES	TBD	 BUS DISPENSER TRANSPORTER
• LOAD EQUIPMENT BUS DISPENSING STATION TRANSPORTER	TBD	AS ABOVE
• MAN CHERRY PICKERS CREW TRANSFER OPERATION ACTIVATE & C. O. COMM SYS ACTIVATE & C. O. OTHER SUBSYS	17 5 2 10	STANDARD MRWS OPERATION SEE TABLE 12-5
• POSITION EQUIPMENT		NEAR CENTERLINE OF SPS

1775-129W

TABLE 12-20. DEPLOY & INSTALL FEEDER BUS (3.1.3.2)

OPERATIONS	AUTO	C. P.	REMARKS
• PREREQUISITE OPERATIONS BLOCK 3.1.3.1 OPERATIONS VERTICAL BEAM INSTALLED			BLOCK 3.1.1.7 OPERATION
• INITIATE BUS DEPLOYMENT FAB STRONGBACK ATTACH STRONGBACK TO BUSES ATTACH CABLES TO STRONGBACK ATTACH CABLES TO OUTRIGGER SEVER CABLES FROM REELS TENSION CABLES	 √ √ √ √ 	 √ √	 DURING VERTICAL BEAM INSTALLATION BY LATERAL MOVEMENT OF DISPENSING STATION
• DISPENSE BUS W/STIFFENERS DEPLOY BUSES UNDER TENSION MONITOR BUS DEPLOYMENT FAB STIFFENERS ATTACH STIFFENERS TO BUSES	 √ √ √ √		
• ATTACH TO OUTRIGGER FAB STRONGBACK ATTACH STRONGBACK TO BUSES ATTACH CABLE TO STRONGBACK CONTINUE DEPLOYMENT ATTACH CABLES TO OUTRIGGER ADJUST TENSION ON CABLES	 √ √ √ √ 	 √ √	AFTER NEXT VERTICAL BEAM INSTALLED END OF 1ST BAY OPERATIONS
• FORM FLEX LOOP FAB STRONGBACK ATTACH STRONGBACK TO BUSES BACK-UP DISPENSING STATION FORM FLEX LOOP ATTACH CABLES TO STRONGBACK SEVER CABLES FROM REELS TENSION CABLES	 √ √ √ √ √ √ 	 √	 WHILE CONTINUING BUS DEPLOYMENT TAKE UP SLACK IN CABLES
• DISPENSE BAY 2 & 3 BUSES DISPENSE BUS W/STIFFENERS ATTACH TO OUTRIGGER FORM FLEX LOOP			} AS ABOVE
• DISPENSE BAY 4 BUSES DISPERSE BUS W/STIFFENERS FAB STRONGBACK ATTACH CABLES TO STRONGBACK SEVER BUSES FROM REELS DEPLOY CABLES ATTACH CABLES TO OUTRIGGER TENSION CABLES SEVER CABLES FROM REELS	 √ √ √ √ √ 	 √ √ √	 AS ABOVE WHILE DEPLOYING BUS
• PREPARE FOR MAIN BUS INSTALLATION 1775-130W			

Figure 12-75. When the flex-loop is properly shaped, the support cables are attached to the strongback and tensioned to retain the shape of the flex-loop. Then the process is repeated for the other three bays of the frame, except that no flex-loop is required at the end of the 4th bay.

- Install Acquisition Bus (3.1.3.3) - Present indications are that the acquision buses will be automatically installed on the 12.7m lateral beams during beam fabrication.

- Install Switch Gear & Connect Buses (3.1.3.4) - The switchgear assembly can either be assembled at a remote location on the construction base or at the installation sites. Either option will require two cherrypickers for installating it. The on-site assembly sequences is defined in Table 12-21. For this sequence all elements of the switchgear assembly are loaded onto a transporter and delivered to the installation location. The braces come in pairs with a hinged joint. Each pair has an electrical interconnect cable attached to it.

  The installation sequence begins with the cherrypickers installing the switchgear and disconnect switches to a platform, while it is still on the cart. The platform is then transported to the apex of the lateral beam and held in place by one cherrypicker while the other cherrypicker positions the braces for installation. The switch gear/acquision bus interconnect cable which is attached to one brace, is then installed. The switch gear/feeder bus interconnect cable on one of the other braces is released from the brace and installed in place. Then the assembly installation is inspected.

- Install Main Bus & Connect Feeder Bus (3.1.3.5) - The main bus configuration is shown in Figure 12-72. It begins at the 5th structural frame and increases in width at each 4 row interval. Installation of the main bus occurs concurrent with the fabrication of the longitudinal beams during first pass construction. After installation of the feeder bus on the fifth structural frame, the bus dispensing station returns to the SPS centerline, reattaches to the feeder bus and deploys the main-to-feeder bus-flex loop before deploying the main bus. After completion of the flex-loop, the main bus will be installed for row 5 in accordance with the sequence of operations shown in Figure 12-75. Note that these operations, which are similar to the operations previously described in Table 12-20 for the feeder bus, are also used for the main bus except for rows 8, 12, & 16. The installation of the main bus for those rows is shown in Figures 12-76 and 12-77. To allow for connection of the feeder bus on Frame 9,

TABLE 12-21. INSTALL SWITCH GEAR & CONNECT BUSES (3.1.3.4)

OPERATIONS	CHERRY PICKER NO. 1	CHERRY PICKER NO. 2	REMARKS
• PREREQUISITE OPERATIONS ACQUISITION BUS INSTALLED FEEDER BUS INSTALLED			
• LOAD PLATFORM SWING CP BOOM TO TRANSPORTER RELEASE TIE DOWNS TRANSPORTED PLATFORM SECURE TO PLATFORM	 √ √ √	 √ √ √	 SWITCH GEAR & DISCONNECT SWITCHES
• POSITION PLATFORM GRASP PLATFORM SWING PLATFORM TO BEAM APEX HOLD PLATFORM IN PLACE	 √ √ √		
• ATTACH SUPPORTS SWING CP BOOM TO TRANSPORTER GRASP BRACE/CABLE PACKAGE SWING PACKAGE TO INSTALL POSITION ATTACH BRACES TO LATERAL BEAM POSITION 1 BRACE AT PLATFORM ATTACH BRACE TO PLATFORM POSITION 2ND BRACE AT PLATFORM ATTACH BRACE TO PLATFORM ATTACH CABLE TO ATTACH CABLE TO DISCONNECT SWITCH	 √ √ 	 √ √ √ √ √ √ √ √	
• REPEAT SUPPORT ATTACHMENT REPEAT PREVIOUS OPERATIONS RELEASE PLATFORM	 √ √	 √ 	 WITHOUT INTERCONNECT CABLE
• ATTACH CABLE TO FEEDER BUS ATTACH CABLE TO SWITCH GEAR RELEASE CABLE FROM BRACE POSITION END OF CABLE AT FEEDER BUS ATTACH CABLE TO FEEDER BUS	 	 √ √ √ √	
• C. O. SWITCH GEAR ASSEMBLY CONTINUITY TEST ACROSS CONNECTIONS TEST DISCONNECT SWITCHES TEST SWITCH GEAR	 √ √ √	 √ √ √	AS REQUIRED

1775-131W

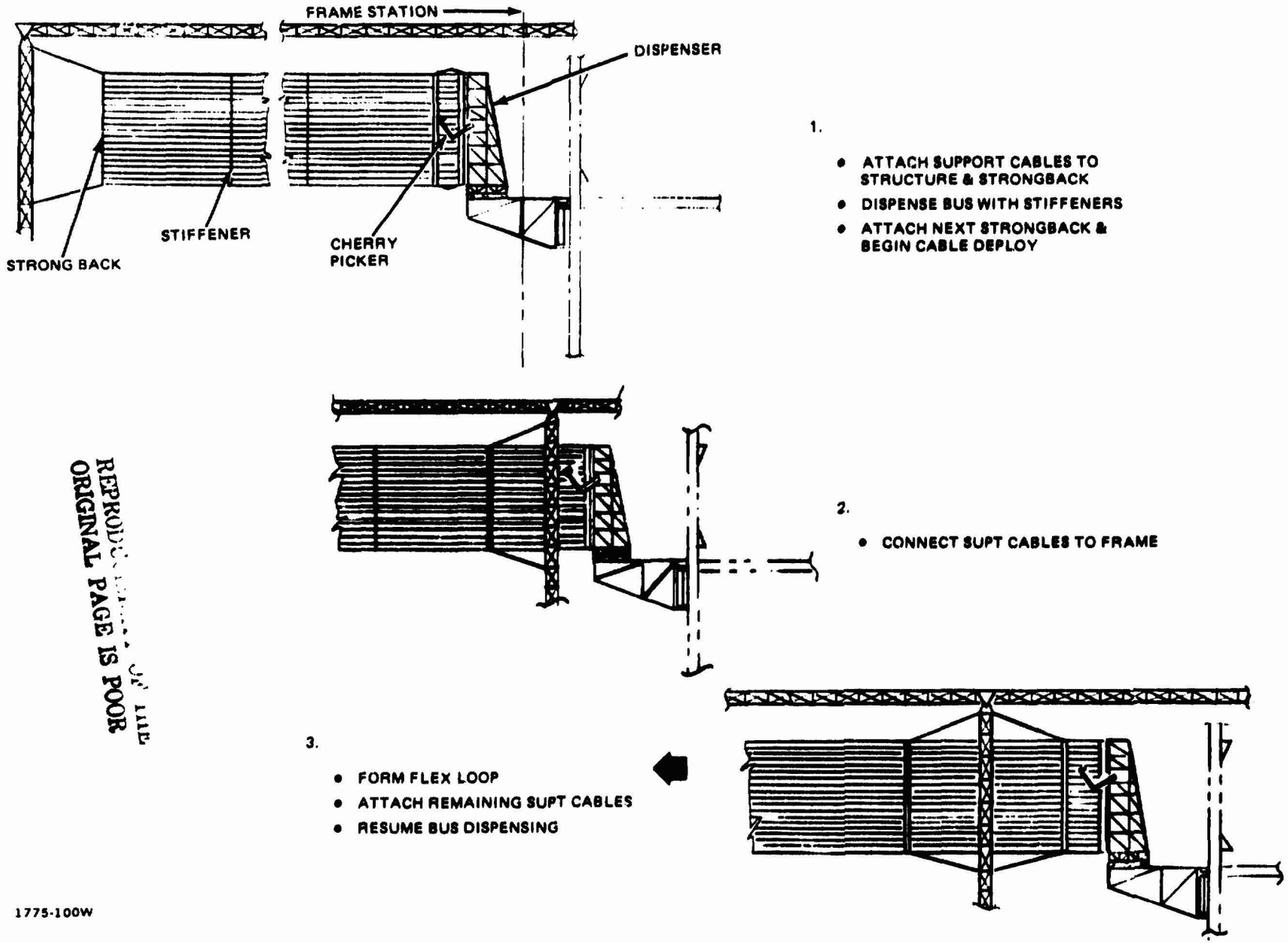

REPRODUCIBILITY OF THE ORIGINAL PAGE IS POOR

1775-100W

Figure 12-75 Initial Main Bus Installation Sequence

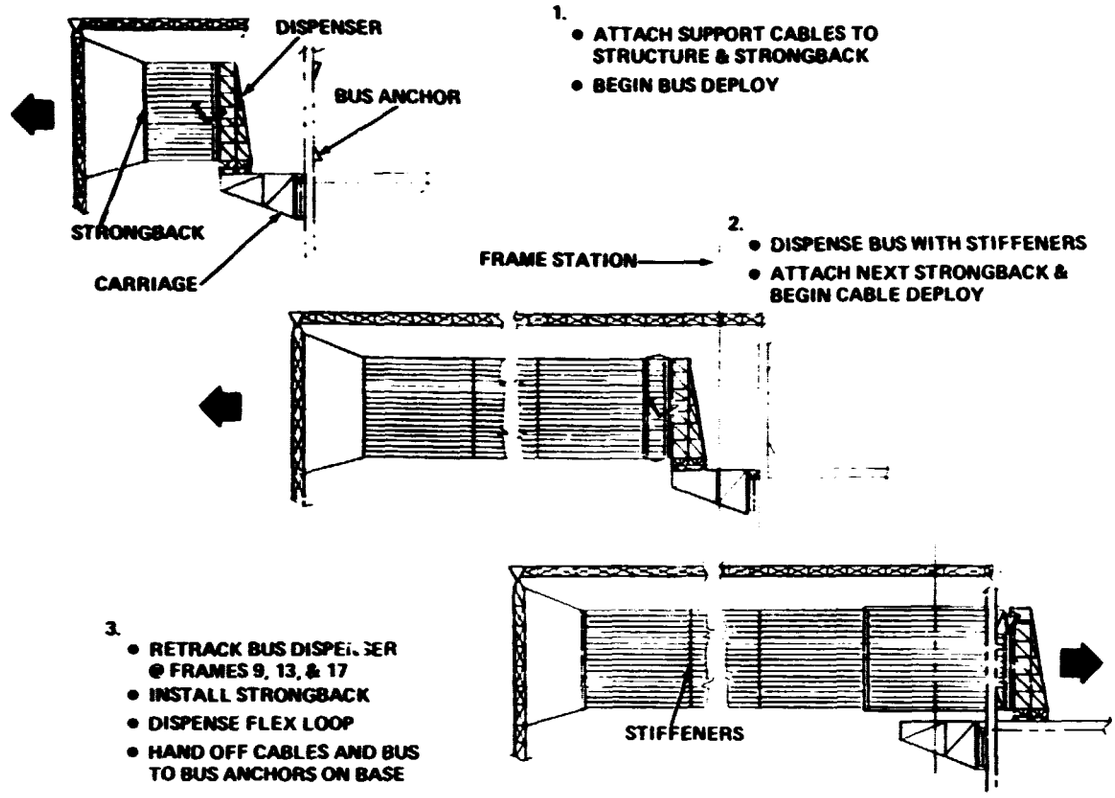

1775-095W

Figure 12-76 Main Bus Installation Sequence (Rows 8, 12 & 16)

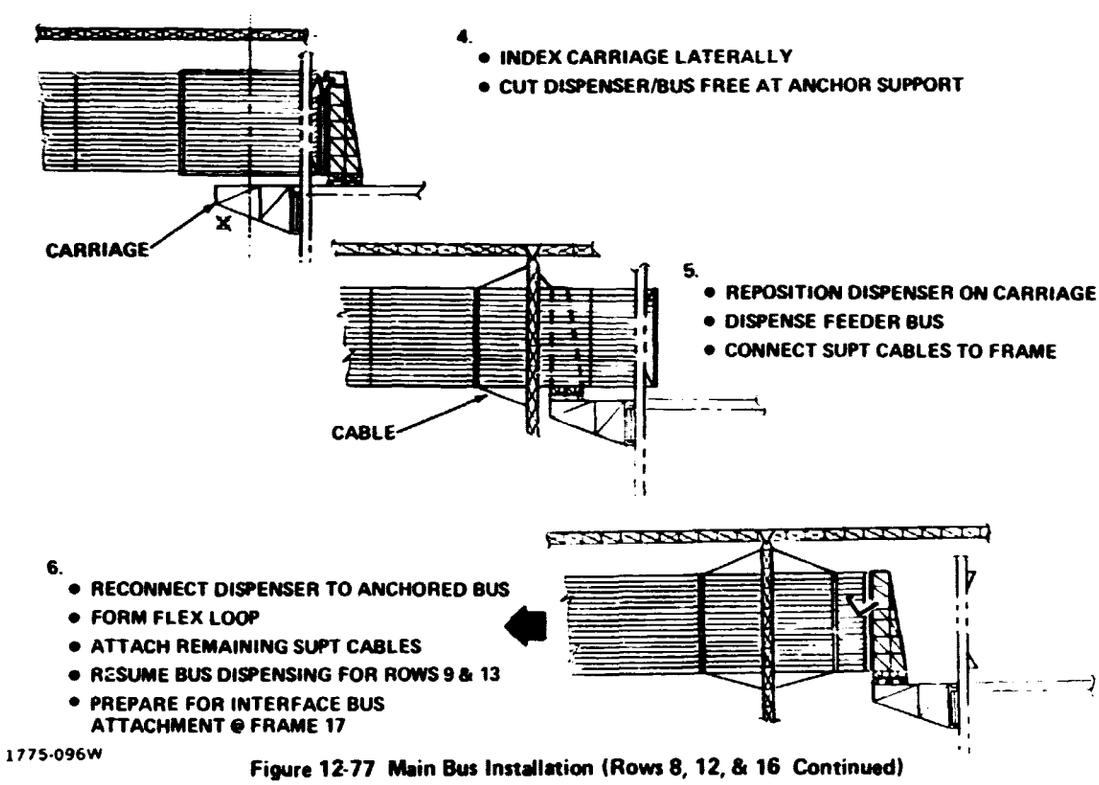

1775-096W

Figure 12-77 Main Bus Installation (Rows 8, 12, & 16 Continued)

13 & 17 the main bus is attached to anchors on the construction base, while the feeder bus is installed and then reconnected to continue main bus deployment.

- Secure for Index Operations (3.1.3.6) - The final power distribution network assembly operations for the construction of the first pass 4 bay wide, 16 bay long energy conversion system module are the nearly simultaneous installation of the switch gear for the last bay of the 17th frame and the connection of the feeder bus on the 17th frame to the main bus. After the final inspection of those connections and the checkout operations for the 1st pass energy conversion module, the bus dispensing station, switchgear transporter and cherry-pickers are removed to a secure location in preparation for the indexing operations in Block 3.1.7.

3.2.4 Install Attitude Control System

Figure 12-78 shows the construction sequence for the SPS attitude control system and illustrates its interface with the fabrication and assembly sequence for the energy conversion system structure. It also provides a detailed assembly flow for the No. 1 RCS unit, located on the first structural row.

3.2.4.1 SPS Attitude Control Installation Requirements - The attitude control system includes all operational elements and software required to establish attitude control of the operational SPS satellite upon release from the GEO construction base and to maintain proper attitude and orbit station keeping during the operational life of the satellite. As shown in Figure 12-79, this includes an ion thruster (with a chemical propulsion backup system for control during equinoctal occultation or unexpected loss of electrical power) at each corner of the satellite. Each thruster is mounted on a 500m outrigger that is positioned as an extension of a 12.7m lateral beam of the energy conversion system structure. The outrigger is supported by a 686m short brace from the lower continuous longitudinal beam and an 824m long brace located in the plane of the upper surface of the structure.

3.2.4.2 Attitude Control Thruster Assembly - Installation Approach - The braces, which support the attitude control thruster assembly, are all fabricated by the 7.5m upper mobile beam machine. As shown in Figure 12-80, fabrication begins with the beam machine facing to the rear of the construction base and fabricating the 500m outrigger. Upon completion of fabrication, the outrigger is attached to the end frame hinge. Subsequent fabrication of 350m of the continuous longitudinal beams will cause the outrigger to be indexed forward the same distance. After fabrication of the 686m

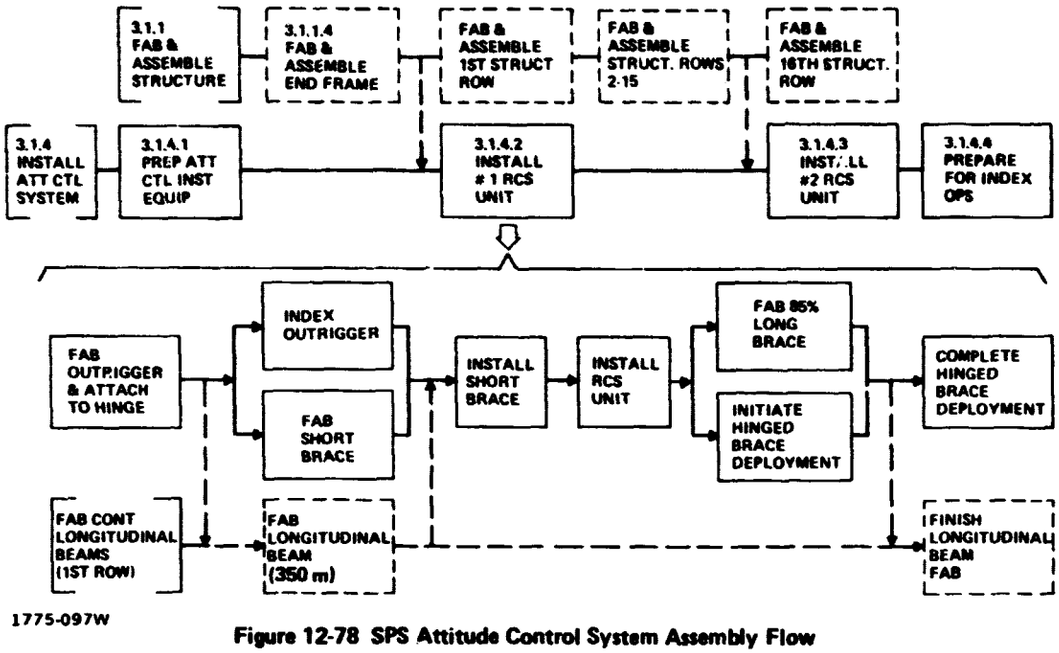

Figure 12-78 SPS Attitude Control System Assembly Flow

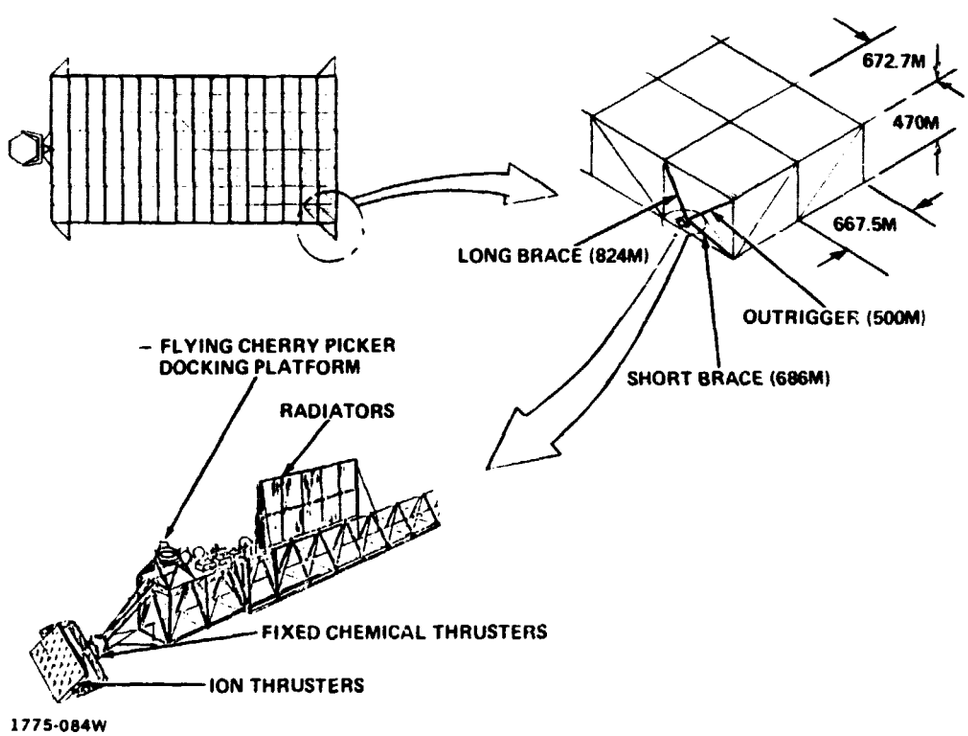

Figure 12-79 SPS Attitude Control Support Requirements

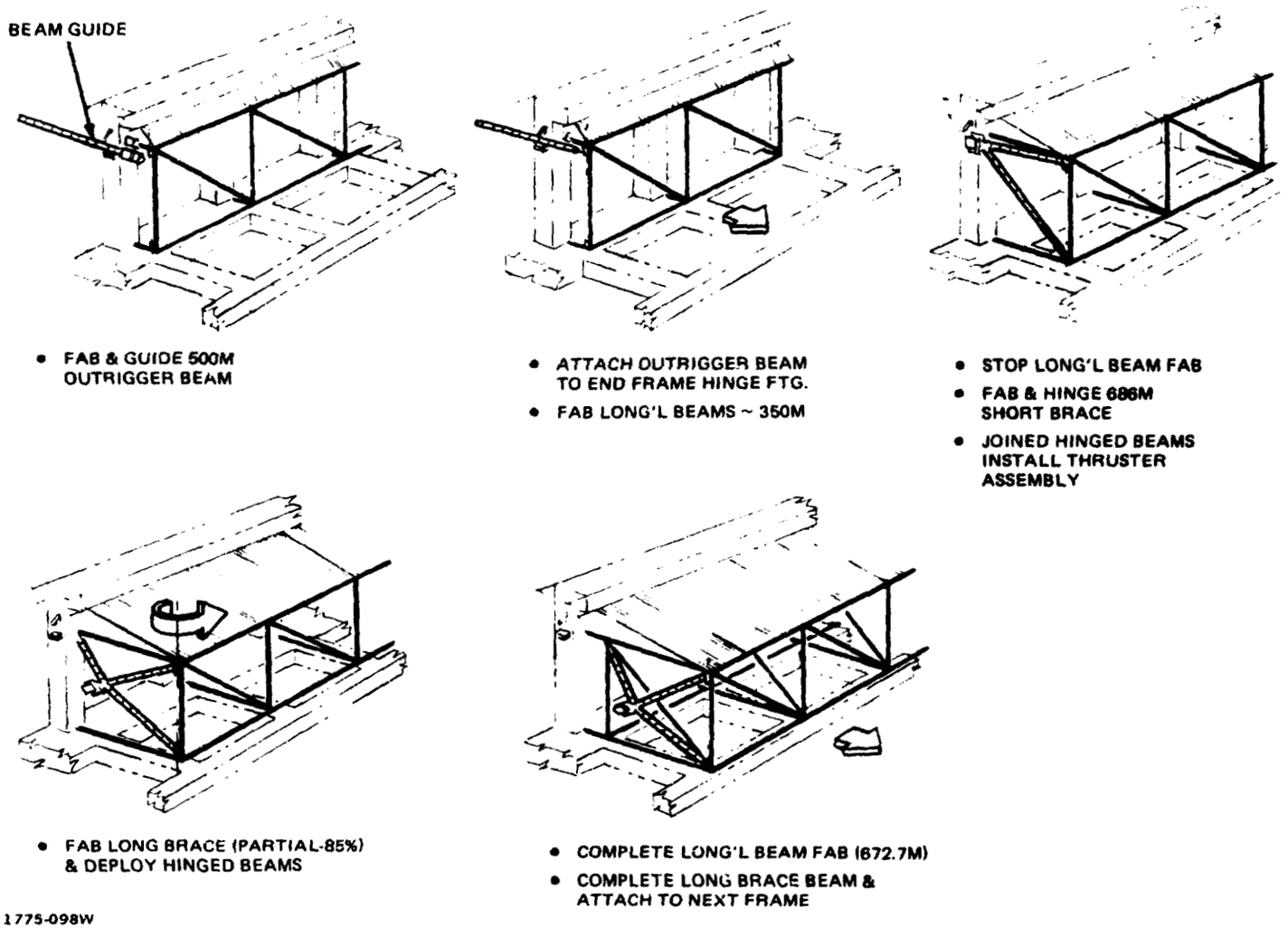

Figure 12-80 Attitude Control Thruster Assembly – Installation

short brace and its attachment to the end frame hinge and to the outrigger, the thruster assembly is installed on the rear 150m of the outrigger. After attaching the end fitting, protruding from the mobile beam machine, to the end of the outrigger, fabricating 85% of the long brace will cause the outrigger and short brace to swing outward, away from the structure. Completion of the 672.7m of the longitudinal beam fabrication and the long brace fabrication will complete the outward swing of the outrigger. The final step is to detach the long brace from the beam machine and attach it to the longitudinal beam.

3.2.4.3 Typical Thruster Assembly Sequence - Figure 12-78 shows the sequence of operations required for the assembly of the RCS thrusters installed on the corners of the SPS energy conversion system. The sequence shown therein is identical for all four thrusters. This assembly sequence is described in detail in Table 12-22. The total assembly time shown therein is 2250 minutes (2.5 days). However, it should be noted that during 1345.4 minutes of that time, longitudinal beams are being fabricated in parallel with the RCS thruster installation operations, as shown previously in Figure 12-36. Thus, the impact on the energy conversion system timeline is only about 1 day.

3.2.5 Other Subsystems

The installation operations associated with the avionics, communications data processing, and other miscellaneous SPS energy conversion subsystems have not been analyzed.

3.2.6 Inspection Operations

As previously indicated in Figure 12-31, the inspection function for the energy conversion system is performed concurrent with all other construction operations. In keeping with the overall SPS quality assurance concept and the groundrules and assumptions specified in Subsection 3.1.3, the construction operations are inspected and verified when performed. Moreover, continuous operations, such as beam fabrication solar array deployment and bus dispensing are performed under constant monitoring. This mode of operation is essential for end builder operations, since the structural rows are assembled on the GEO construction base and then indexed beyond the construction facility, where they are no longer available for re-work operations, except by means of a free-flying work module.

TABLE 12-22 THRUSTER ASSEMBLY OPERATIONS

OPERATIONS	TIME (MIN)	REMARKS
• PREREQUISITE OPERATIONS	N/A	
– ATTACH HINGES ON LONGITUDINAL BEAMS		DURING LONG. BEAM FAB
– PREPARE THRUSTER		
– ASSEMBLY END FRAME		BLOCK 3.1.1.4
• FAB & ATTACH OUTRIGGER	150	REF: TABLE 12-8
– AIM BEAM MACHINE	5	
– ATTACH END FITTING	10	
– FAB OUTRIGGER	100	500 M @ 5 MPM
– ATTACH 2ND END FITTING	10	
– HANDOFF OUTRIGGER TO GUIDE	5	
– MOVE BEAM MACHINE	–	DURING HANDOFF
– INDEX OUTRIGGER TO UPPER HINGE	15	
– ATTACH OUTRIGGER TO HINGE	5	
• FAB 350 M OF LONGITUDINAL BEAM	700	
– FAB BEAM	700	BLOCK 3.1.1.5 OPERATION
– INDEX OUTRIGGER	–	PARALLEL W/BEAM FAB
– AIM BEAM MACHINE	5	
– ATTACH END FITTING	10	
– FAB SHORT BRACE (686 M)	137	DURING BEAM FAB
– ATTACH 2ND END FITTING	10	
– HANDOFF BRACE	5	
• ATTACH BRACE & SUBSYSTEMS	55	RADIATOR, DOCK, THRUSTER
– TRANSPORT BRACE	1	
– ATTACH BRACE TO BOTTOM HINGE	4	REF. TABLE 12-9
– ATTACH BRACE TO OUTRIGGER	5	
– ATTACH SUBSYSTEMS	45	
– TEST SUBSYSTEMS	–	AS INSTALLED
• INITIATE HINGED BRACE DEPLOYMENT	700	
– AIM BEAM MACHINE	5	
– ATTACH END FITTING ON BRACE	10	DURING RCS ATTACHMENT
– CONNECT END FITTING TO OUTRIGGER	10	
– FAB 700 M OF LONG. BRACE	700	@ 1 M/MIN
– DEPLOY HINGED BRACES	–	PARALLEL WITH BRACE FAB
• FINISH LONG. BEAM FAB	645.4	
– FINISH LONG. BEAM FAB	645.4	322.7 M @ 0.5 MPM
– CONTINUE LONG. BRACE FAB	324	
– ATTACH 2ND END FITTING	10	DURING LONG. BEAM FAB
– HANDOFF BRACE	5	
– ATTACH LONG BRACE TO #2 FRAME	5	
TOTAL	2250.4	2.5 DAYS

1775-156W

3.3 POWER TRANSMISSION SYSTEM ASSEMBLY

The SPS microwave power transmission system is constructed upon the antenna construction platform shown in Figure 12-23 as a part of the construction base. The antenna construction approach is summarized below as defined by Boeing during the Phase 1 study effort (D180-25037-3).

Figure 12-81 shows a side view looking into the antenna assembly facility. This picture illustrates the relative locations of the various construction equipment. Figure 12-82 illustrates the general construction sequence. The antenna is indexed through the facility one bay at a time. When a full width of bays is completed, the antenna is indexed longitudinally out of the facility so that the next row of bays can be assembled. When the antenna is completed, it will be located at the proper position so that it can be mated to the yoke.

The integrated antenna construction timeline is shown in Figure 12-83.

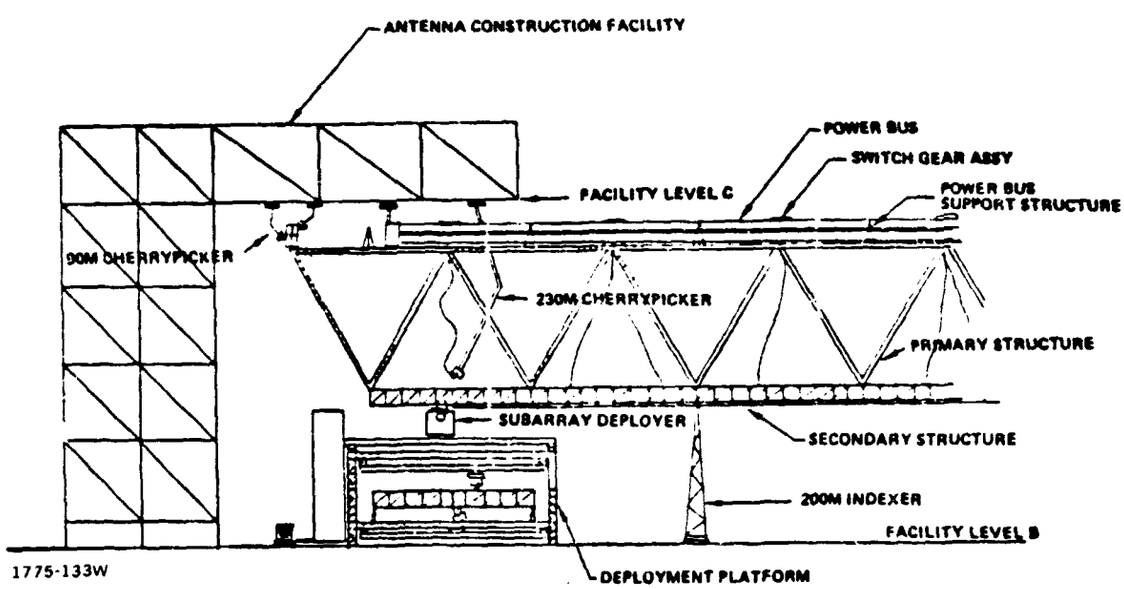

Figure 12-81 Antenna Construction Facility

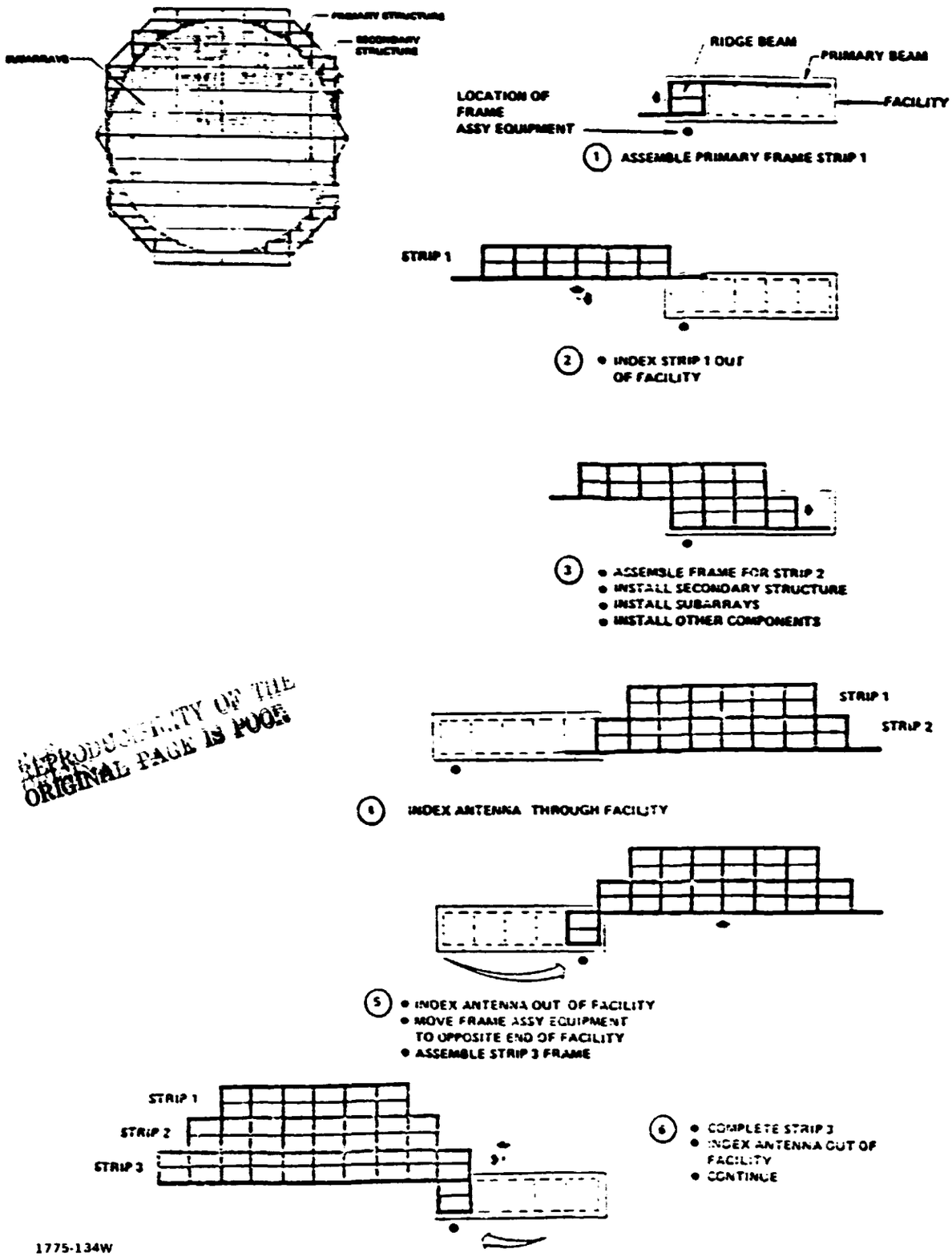

REPRODUCIBILITY OF THE ORIGINAL PAGE IS POOR

Figure 12-82 Antenna Assembly Sequence

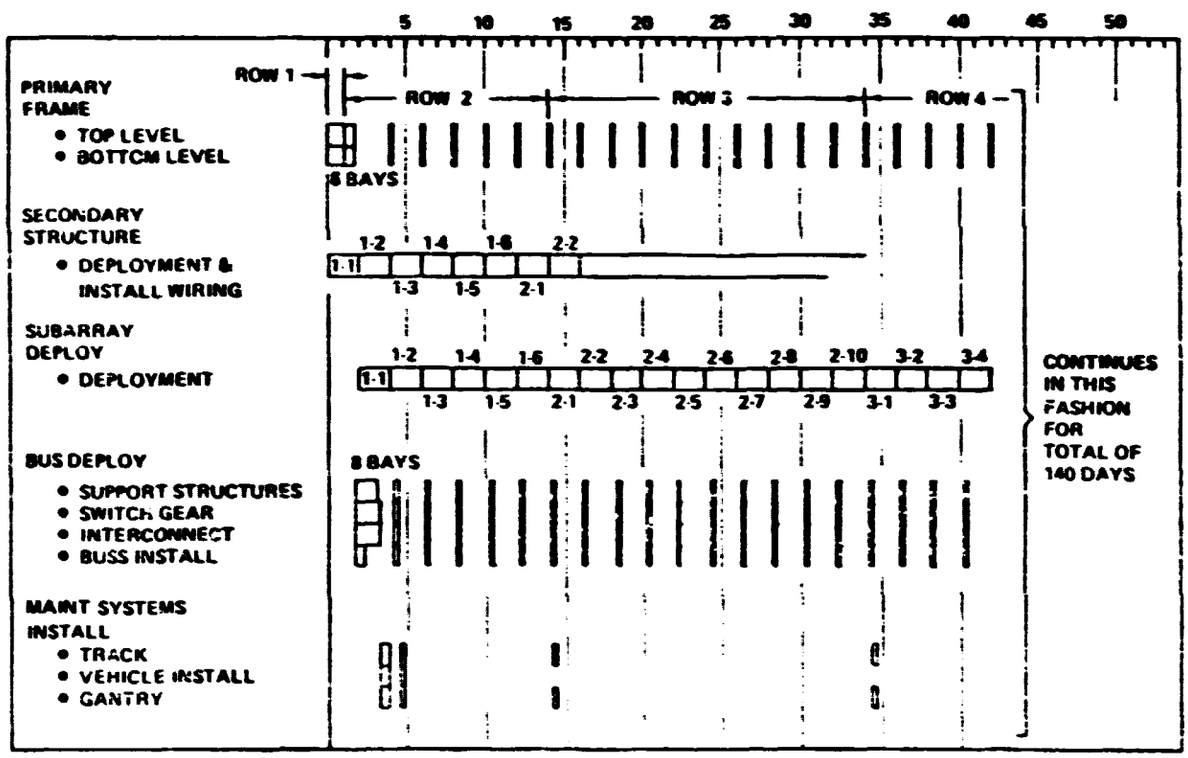

Figure 12-83 Antenna Construction Timeline

Construction of the antenna entails the following suboperations: primary frame assembly, power distribution system installation, phase control system installation, subarray installation and final test and checkout. These operations are described in the following subsections.

3.3.1 Assembly Structure

Figure 12-84 illustrates the configuration of the antenna primary structure. Figure 12-85 illustrates the frame construction sequence, the beam machine and cherrypicker locations, and time required. Figure 12-86 illustrates that both "tall" and "short" indexers are required during the frame assembly sequence. The beam end fittings and the battens are preassembled in the level K Subassembly Factory and are then delivered in sets or magazines to the antenna construction facility.

The antenna secondary structure is conceptually a preassembled deployable cubic structure. The structure is delivered as a collapsed and telescoped package. The construction task is to expand and lock the structure into a 104 x 104 meter square platform that can then be placed upon mounting points on the antenna primary structure.

The collapsed secondary structure package is delivered to the antenna deployment platform shown in Figure 12-81. This platform is the most prominent assembly of equipment on the antenna construction facility. Many pieces of equipment operate on this platform as illustrated in Figure 12-87. The equipment platform is used to deploy the secondary structure, install phase control wiring, install power distribution wiring, and to install subarrays.

After each secondary structure package arrives at the platform, it is then placed onto the secondary structure de-telescoper machine mounted on one of the gantries. The phase control system installation cherrypicker is employed to anchor one face of the secondary structure while the de-telescoper retracts to expand the structural package to its full 10m depth. A lanyard is then pulled which allows the secondary structure to expand using spring-activated hinges on the structural struts. When the secondary structure is fully expanded and self-locked into a rigid structure, the corners are attached to the secondary structure telescoping installation system. The structure is then ready to be wired. After the wiring is completed and the primary structure correctly positioned, the secondary structure is raised into contact with the primary structure by the telescoping actuators. Cherrypickers then make the necessary structural joints between the primary and secondary structures.

REPRODUCIBILITY OF THE ORIGINAL PAGE IS POOR

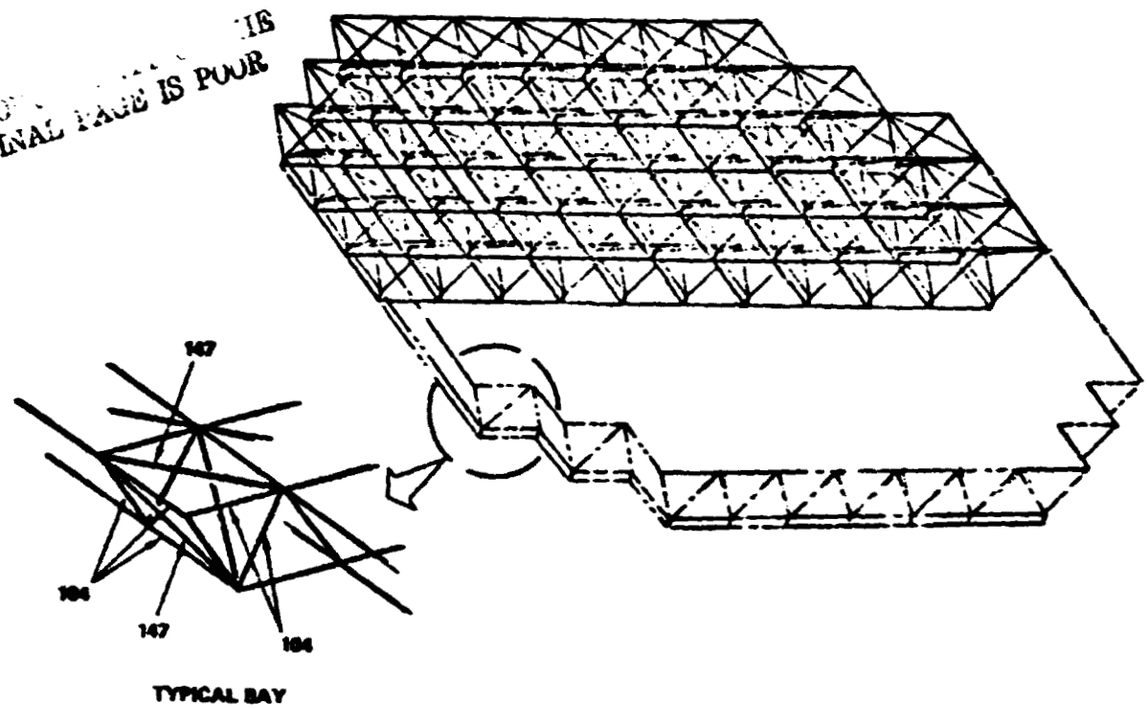

1775-136W

Figure 12-84 MPTS Primary Structure

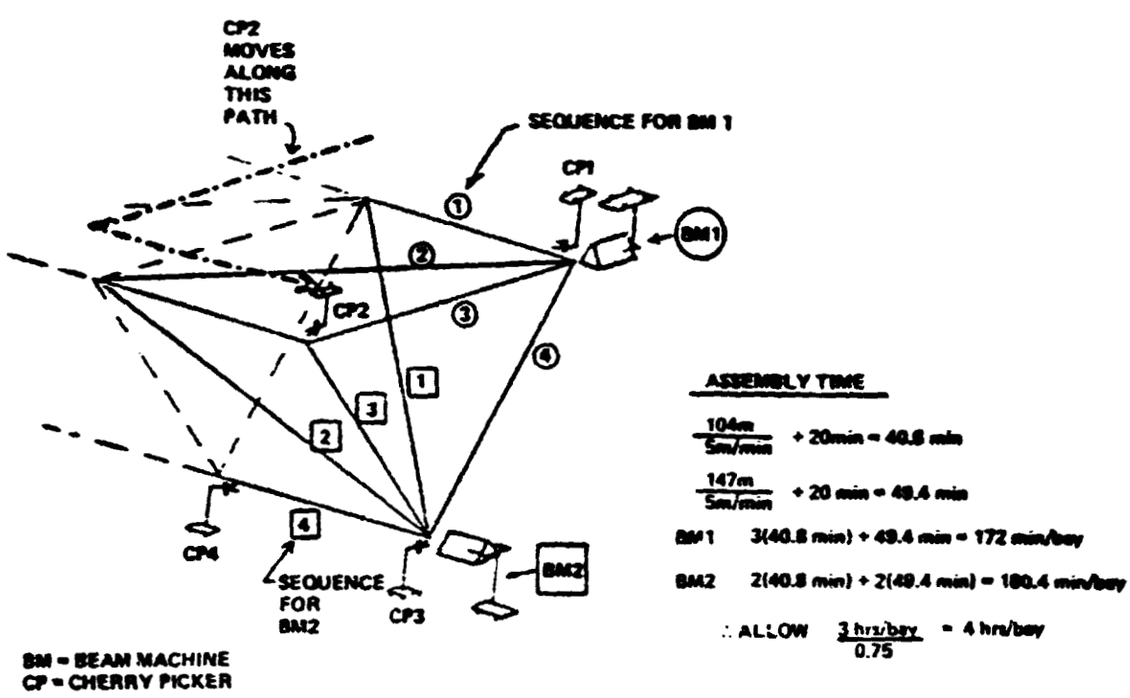

1775-137W

Figure 12-85 MPTS Primary Frame Assembly Equipment, Sequence, and Timeline

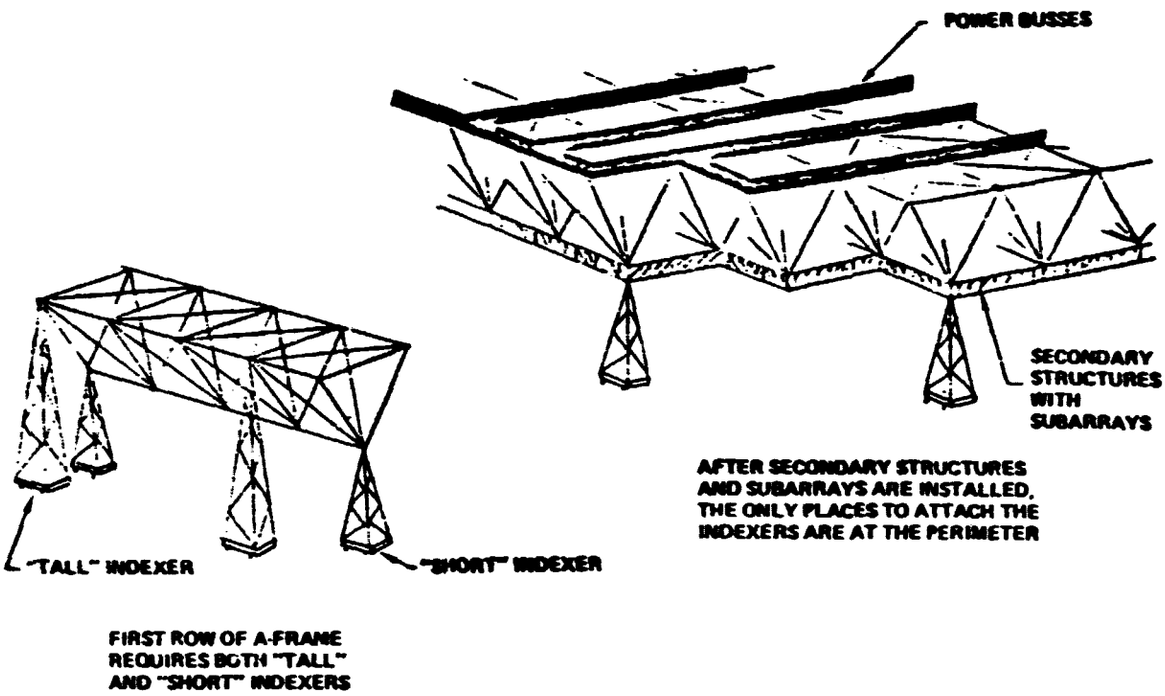

Figure 12-86 Antenna Indexers

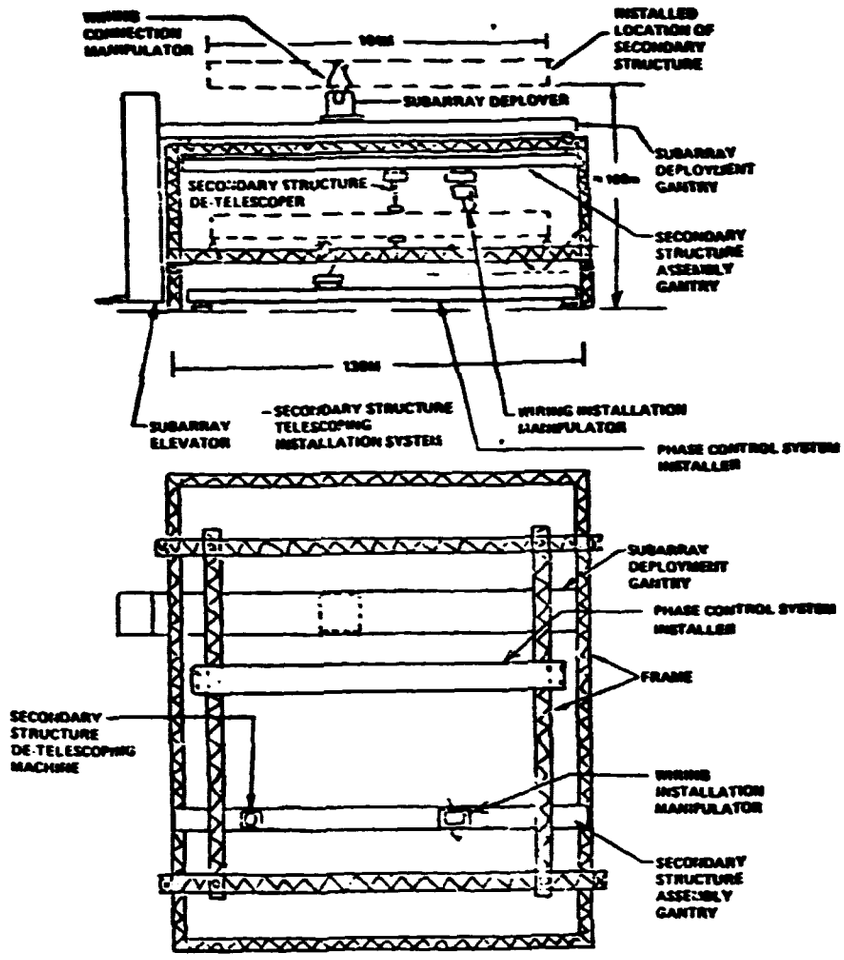

1775-139W

Figure 12-87 Antenna Deployment Platform

3.3.2 Install Power Bus

After each bay of primary structure is completed, it is then time to install the power distribution system on the surface opposite the subarrays. The first step is to install bus support subassemblies which have been preassembled in the level K Subassembly Factory. A pair of cherrypickers are employed (the same ones used to install the upper surface of the primary frame). At the nodal joints of the primary structure, it is necessary to install a preassembled antenna switch gear subassembly. After the support structures and switchgear assemblies are installed, a bus deployment machine moves into place and deploys the necessary power bussing for the bay.

It is necessary to install a power distribution wiring harness on the secondary structures. This harness goes onto the face of the secondary structure opposite where the subarrays will be installed. A gantry and cherrypicker has been incorporated into the deployment platform for this purpose.

After a secondary structure element has been installed onto the primary structure, it is necessary to run power cables between the antenna switch gear subassemblies (on the primary structure) to the power distribution wiring harness on the secondary structure. A 230m cherrypicker is employed for this operation.

3.3.3 Install Phase Control

After the secondary structure is deployed and attached to the installation telescopes, it is necessary to install a phase control wiring harness (perhaps a fiber optics harness) onto the face of the secondary structure adjacent to where the subarrays will be installed. A gantry and cherrypicker have been incorporated into the deployment platform for this purpose.

The phase control interconnect operation between the subarrays and the harness installed on the secondary structure is accomplished as a part of subarray deployment.

3.3.4 Install Subarrays

Before subarrays are delivered to the deployment area, the pallet of subarrays are delivered to a subarray test area where each subarray will be tested for mechanical and electrical integrity, see Figure 12-88. The subarrays that require refurbishment would be taken to a nearby facility for repair. The tested subarrays are loaded onto a transporter for delivery to the deployment platform.

Figure 12-89 shows how pallets of subarrays are transferred to and from the subarray deployer using an elevator. The deployment machine traverses along the gantry,

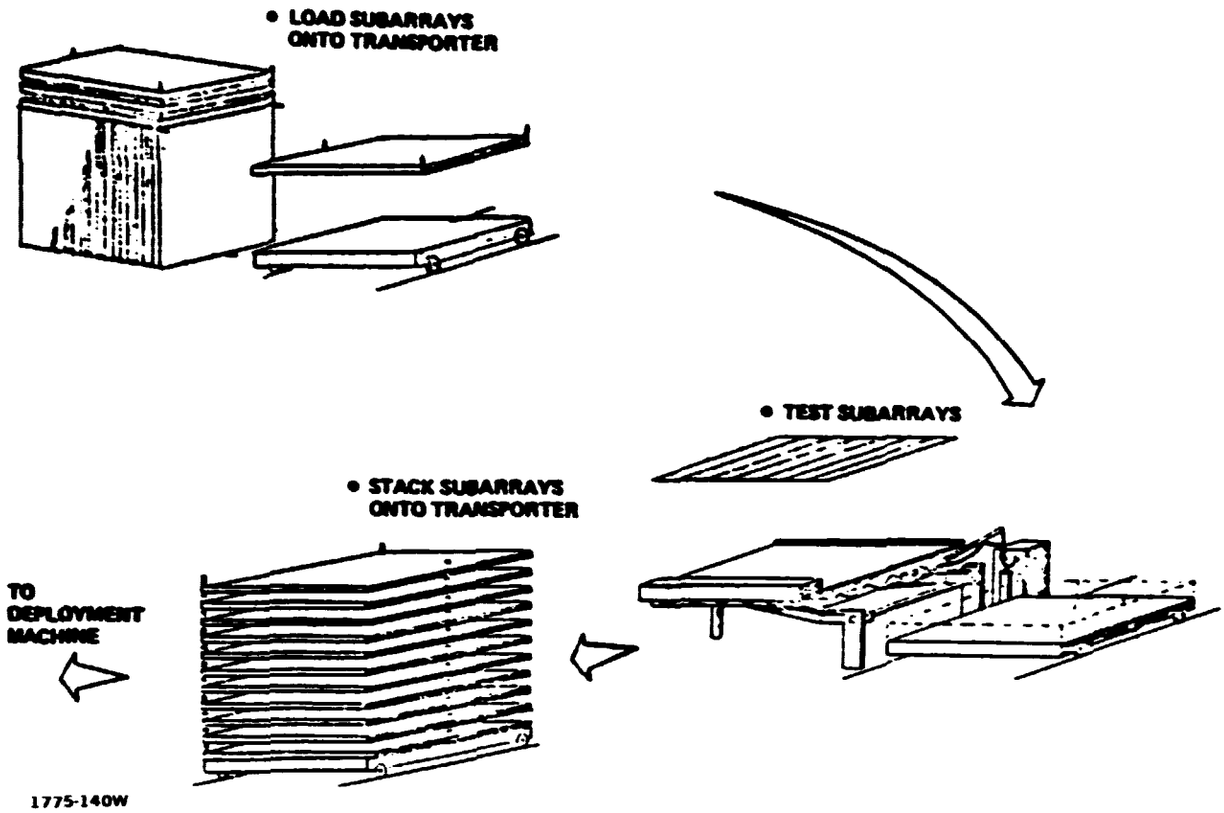

Figure 12-88 Subarray Preparation Process

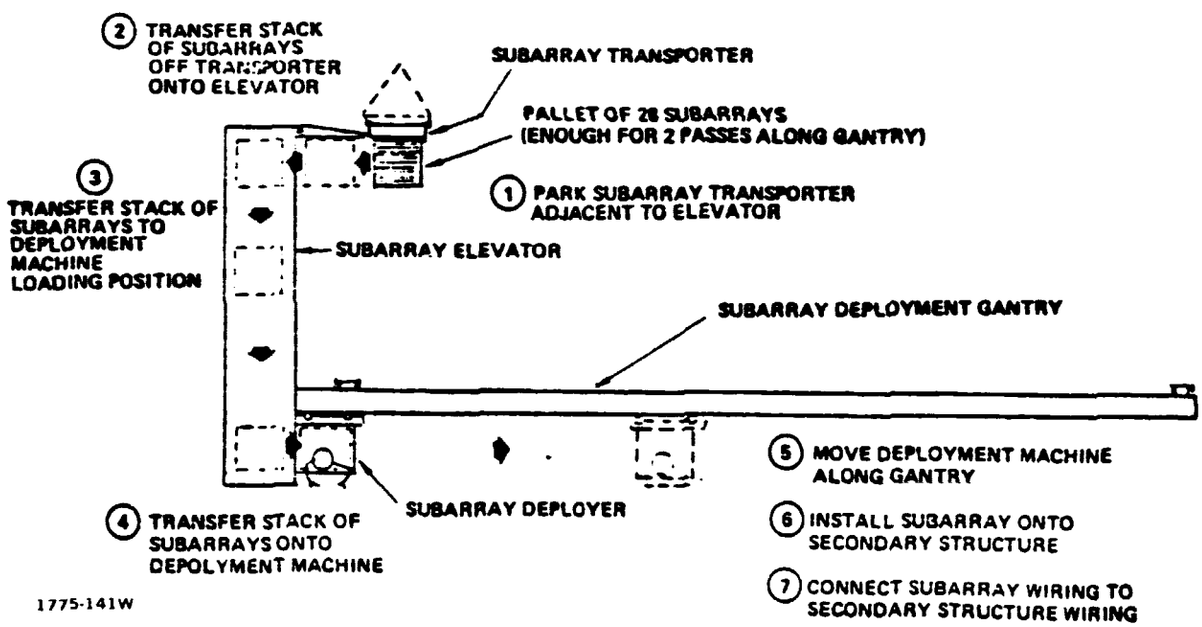

Figure 12-89 Subarray Deployment Sequence

stopping every 10.4 meters. The deployment machine mechanisms extract each subarray panel from the pallet and raise it into position where the jackscrews can be attached to hardpoints on the secondary structure. The subarray is then leveled. The cherrypicker on the side of the deployer then makes the phase control and power distribution pigtail connections to the respective harnesses previously installed onto the secondary structure.

3.4 SUBASSEMBLY FACTORIES

Subassembly factories are included on GEO base levels "K" and "J", as shown in Figure 12-90, in order to support the main assembly operations for the antenna and solar array collector, respectively. The antenna subassembly factory on level K, for example, is equipped with component storage racks, manned cherry pickers and various subassembly jigs. This factory preassembles beam end fittings, switch gear set ups and power bus support structures for the antenna and its rotary joint/yoke interface. The level J factory provides similar subassemblies which are tailored to be installed in the energy conversion system. The level J factory is also used to preassemble major components of the attitude control thrusters and major elements of required satellite maintenance equipment (e.g. solar array blanket annealing gantries).

3.5 INTERFACE ASSEMBLY & SYSTEMS MATING

A breakdown of the assembly operations for the interface system and the mating operations for the assembled systems is shown in Figure 12-91.

The assembly of the interface (Block 3.3) includes the parallel fabrication and assembly of the yoke and rotary joint in Blocks 3.3.1 and 3.3.2 and their subsequent integration by the Block 3.3.3 operations. The completed interface system is then mated to the power transmission system in Block 3.4.1 and to the energy conversion system in Blocks 3.4.2 through 3.4.4, which include the fabrication and assembly of the yoke support structure and the concurrent lateral indexing operations.

3.5.1 Installation Requirements

The interface system construction includes the antenna yoke, rotary joint and antenna support structure as shown in Figures 12-92 and 12-93. The antenna yoke and antenna support structure are assembled with the 7.5m beams baselined for SPS primary structure. The antenna support struts join to form a hexagonal interface that provide eight support points for the mechanical rotary joint circular beam. The mechanical rotary joint is composed of two segmented circular ring beams, as shown in Figure 12-94. The circular ring beams are assembled with precut 1 meter beam seg-

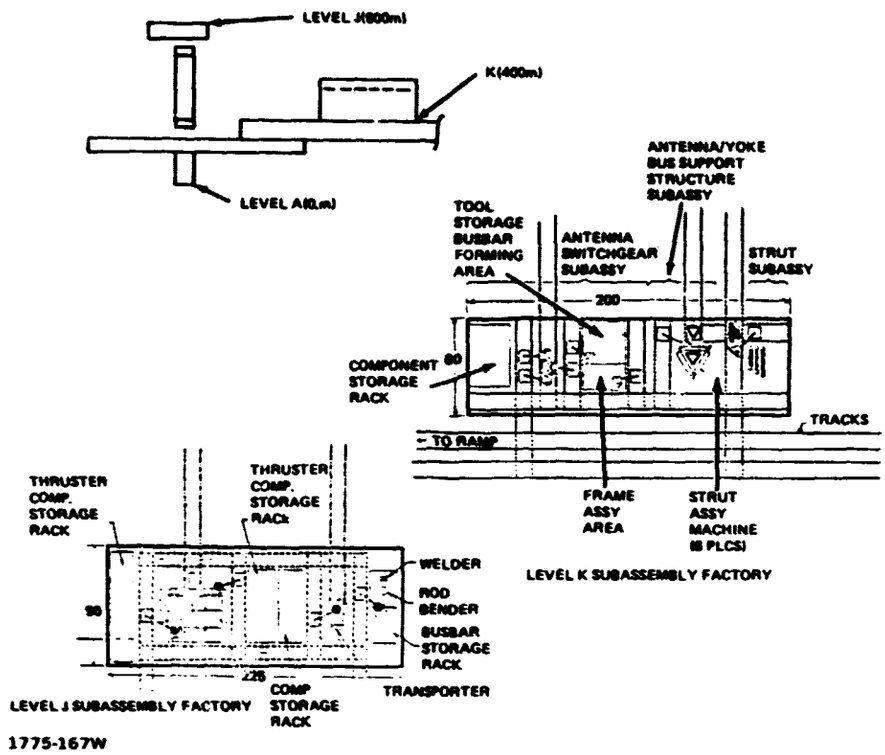

Figure 12-90 Subassembly Factories

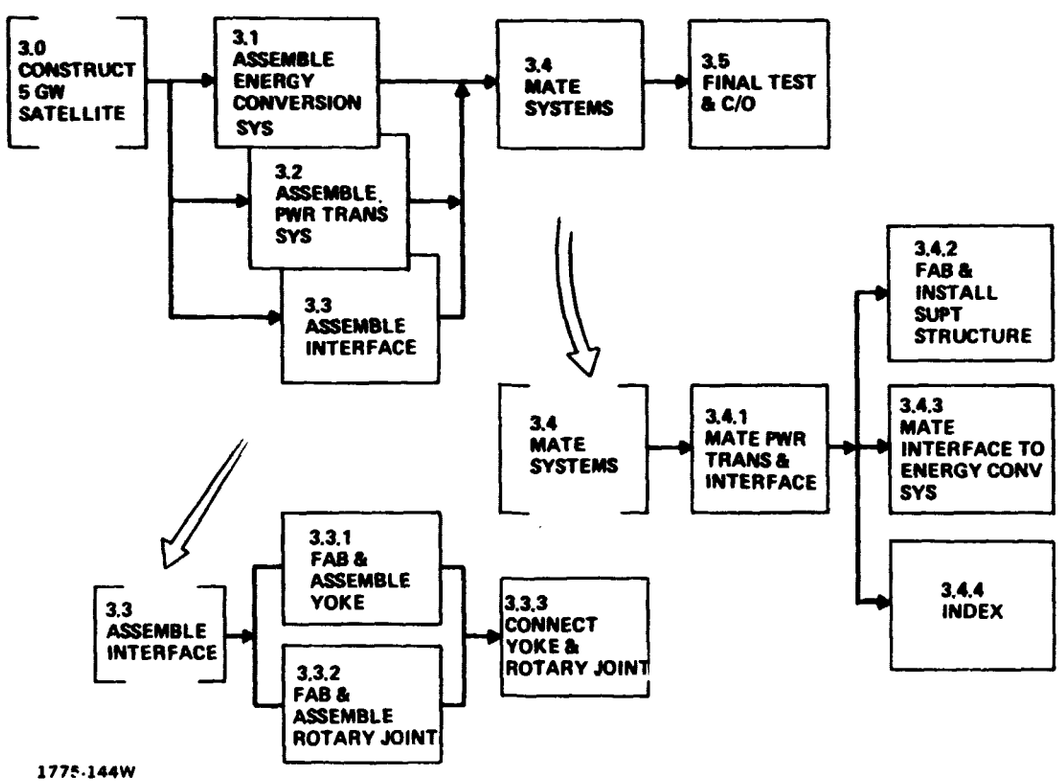

Figure 12-91 Interface Assembly & Systems Mating Flow

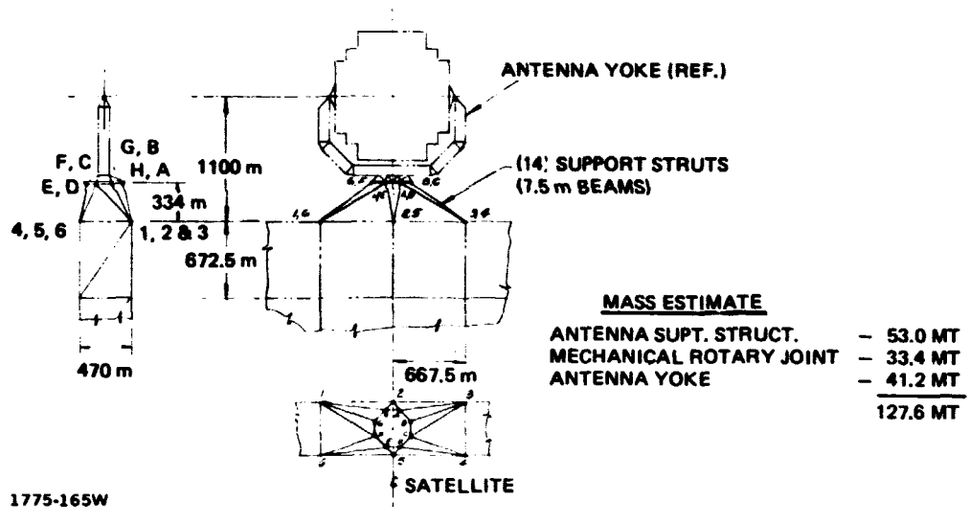

Figure 12-92 Interface Structure

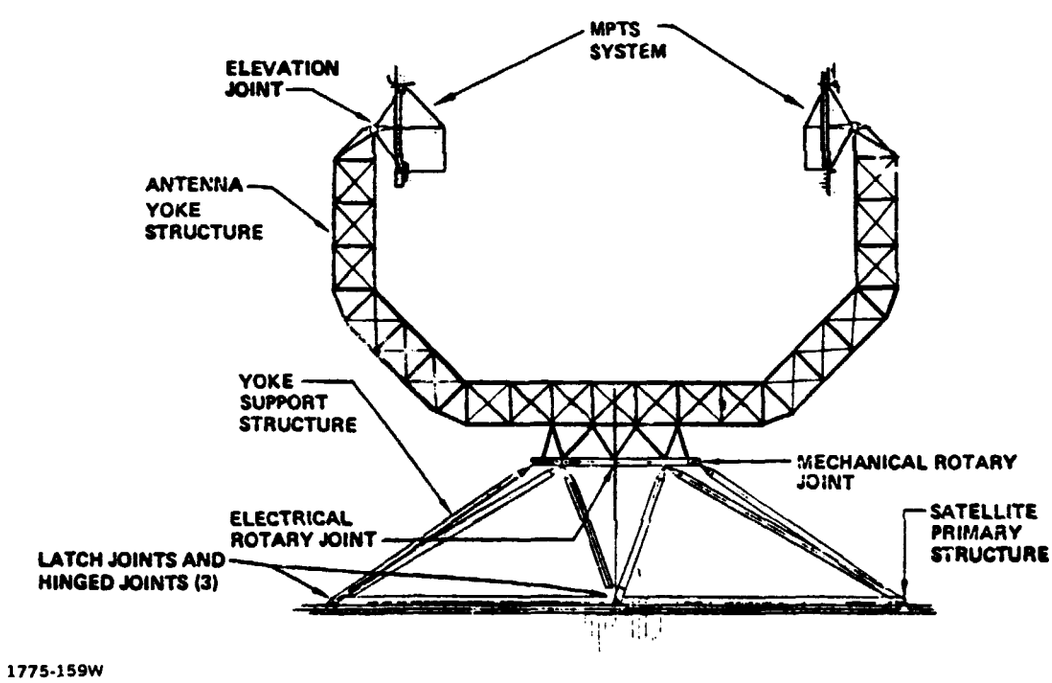

Figure 12-93 Antenna Interface

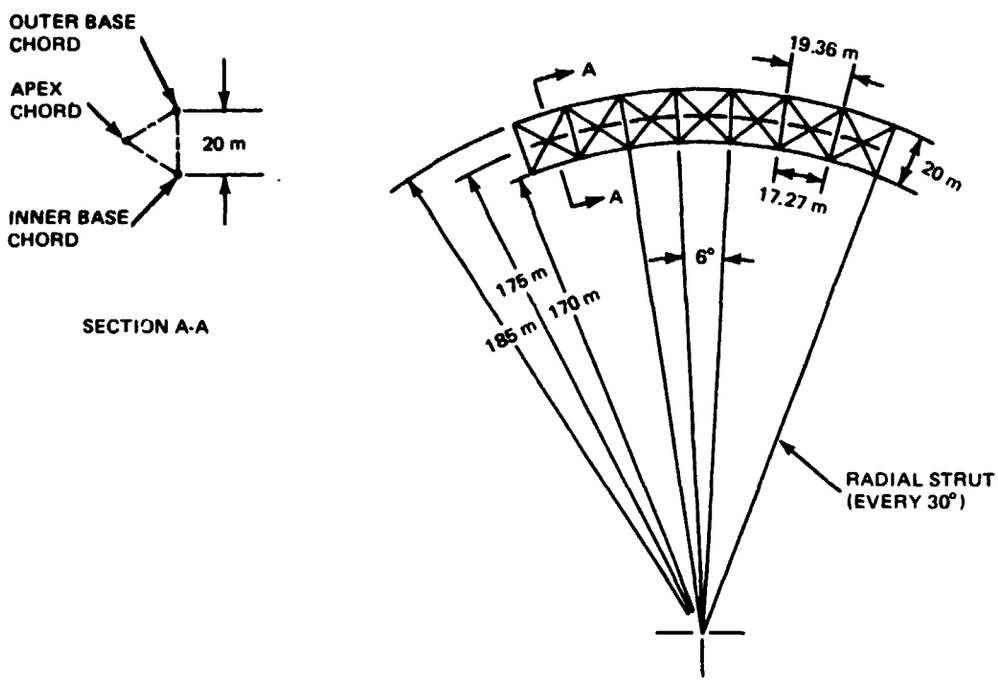

Figure 12-94 Circular Ring Beam Geometry

1775-158W

ments. Roller ring drive assemblies provide the mechanical connection between each ring beam and a central electrical rotary joint complete the interface.

3.5.2 Interface Assembly Approach

The yoke/rotary joint assembly facility is used to construct the satellite interface system and support the mating of assembled systems. The yoke/rotary joint assembly facility is illustrated in Figure 12-95. This facility moves across the back of the solar collector assembly facility; first to support parallel yoke/antenna assembly operations as shown in Figures 12-96 and 12-97, and second to facilitate final systems mating as shown in Figure 12-98.

Construction materials can be supplied to the yoke/rotary joint assembly facility directly from the top of the construction base. Required materials can be moved down the face of the facility to the construction equipment operating on its face. These operations are described further below.

Dedicated construction crews are not required for this facility operation since the interface assembly operations can be scheduled for periods when energy conversion and antenna assembly crews are idle.

3.5.3 Yoke Rotary Joint Assembly

The antenna support yoke assembly sequence is shown in Figures 12-99 and 12-100. The same construction facility used for the rotary joint is used to fabricate and position the support yoke. The entire yoke is fabricated at the final installed level using tall indexers to support the completed sections during the fabrication process. The yoke structure is fabricated using 7.5m beam builder sub-stations mounted on the face of the construction facility. The structure is composed of individual beam elements. The beam handling is accomplished using cherry pickers on the face of the construction facility and on the antenna construction levels as required.

The first view in Figure 12-99 shows the indexer supports moving the completed portion of the yoke along diagonal tracks as the first diagonal leg nears completion. The construction facility is indexed to the left and supports the yoke end where fabrication is in progress.

The second view shows the support indexers moving laterally as the construction facility moves to the right to position the completed yoke sections in their final location and fabrication of the main cross member proceeds. During this phase of fabrication, the main cross member is supported on the construction facility.

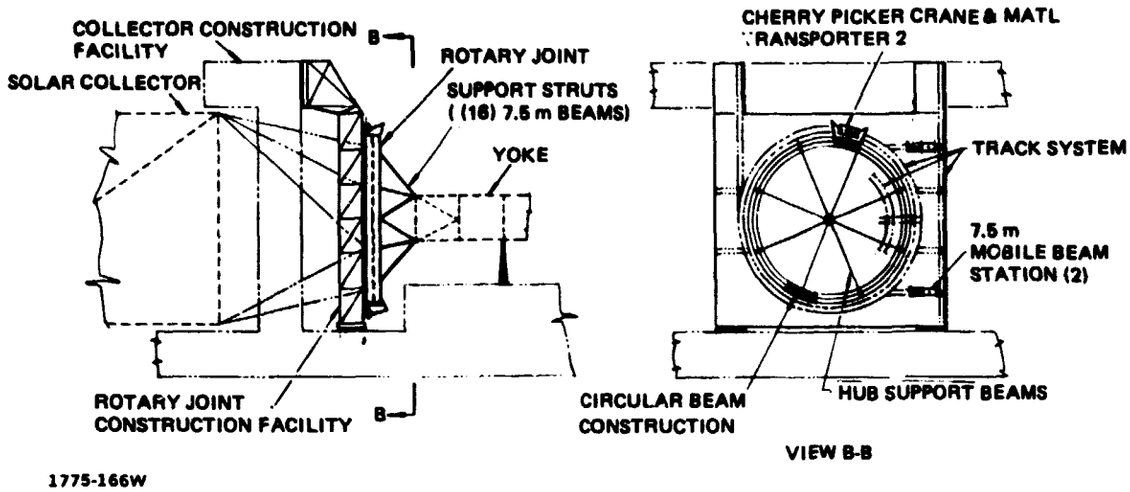

Figure 12-95 Yoke/Rotary Joint Assembly Facility

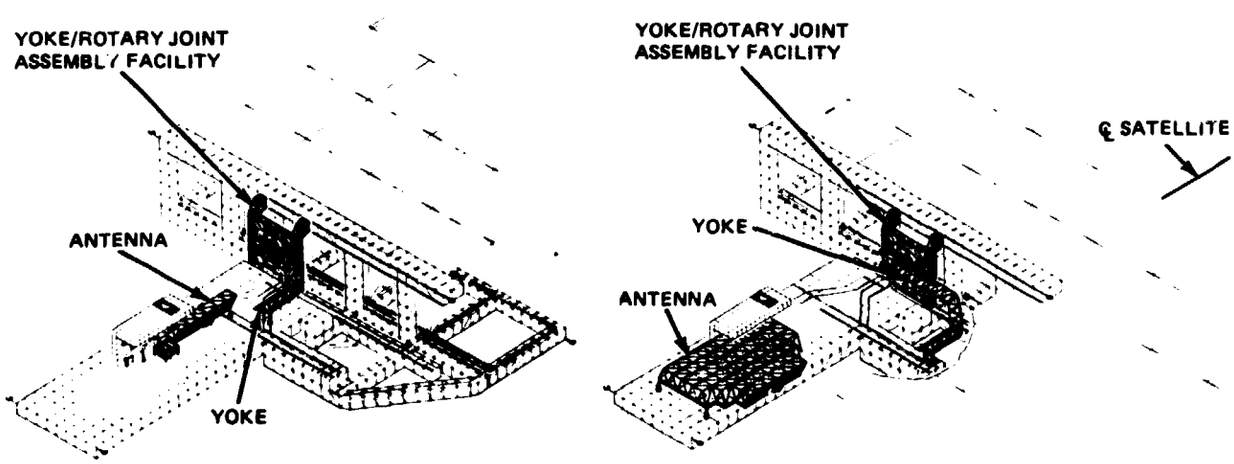

- FIRST CONSTRUCTION PASS
- LOCATE YOKE FACILITY FOR INITIAL CONSTRUCTION
- CONSTRUCT ANTENNA & YOKE IN PARALLEL

- SECOND CONSTRUCTION PASS
- RELOCATE YOKE FACILITY FOR CONT'D USE
- ANTENNA & YOKE CONSTRUCTION NEAR MID-POINT

1775-168W

Figure 12-96 Antenna/Interface Construction Sequence

REPRODUCIBILITY OF THE ORIGINAL PAGE IS POOR

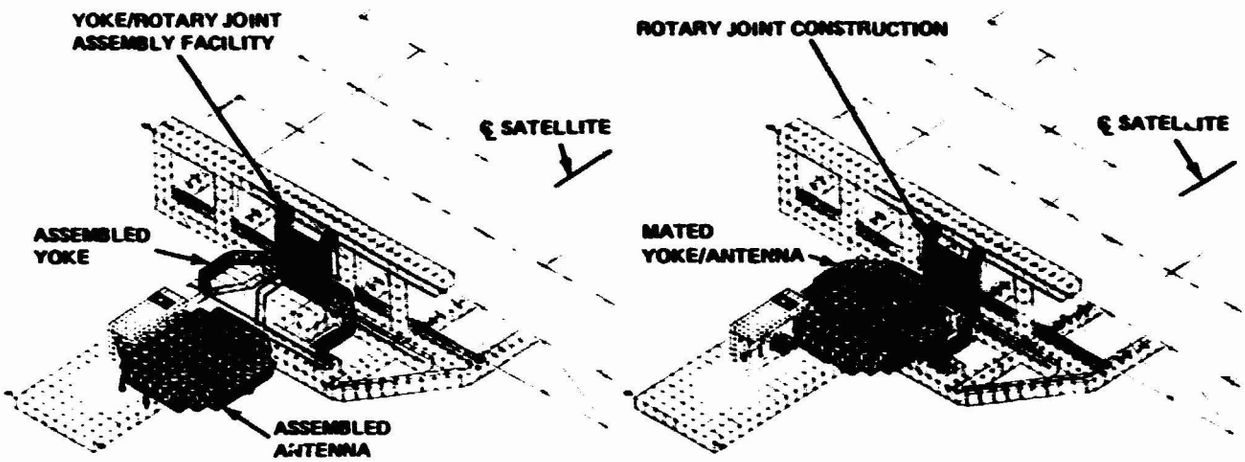

- SECOND PASS COMPLETE
- YOKE ASSEMBLY COMPLETE
- ANTENNA ASSEMBLY COMPLETE

- JOIN YOKE & ANTENNA
- CENTER YOKE/ROTARY JOINT ASSEMBLY FACILITY TO FABRICATE ROTARY JOINT
- FABRICATE & ATTACH YOKE/ROTARY JOINT STRUTS

1775-169W

Figure 12-97 Antenna/Interface Construction Sequence — Continued

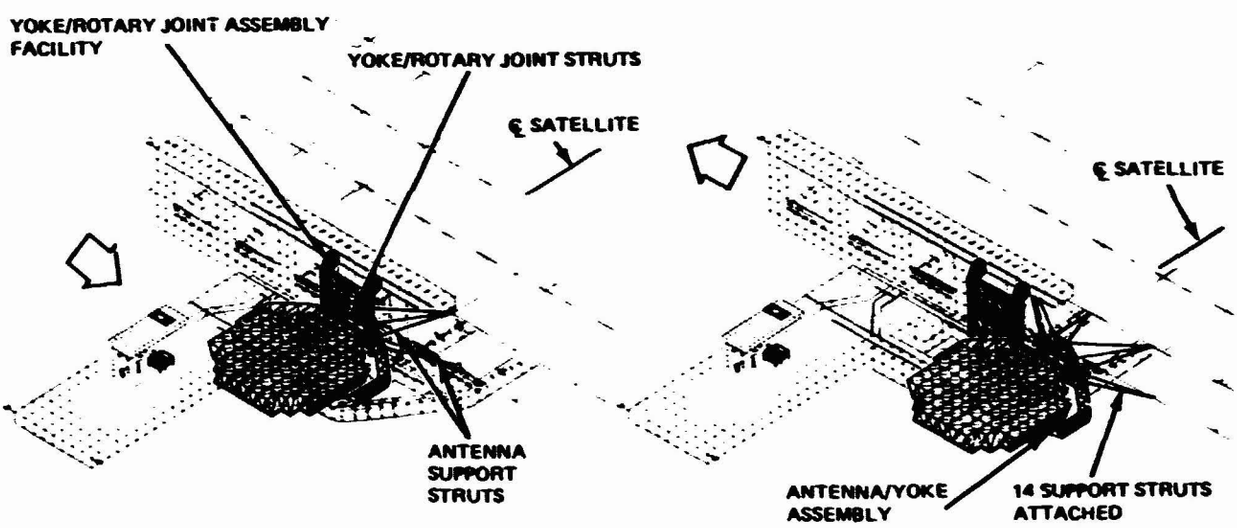

- INDEX BASE TO SOLAR COLLECTOR PICKUP
- INDEX ANTENNA TO ALIGN WITH COLLECTOR
- POSITION YOKE FACILITY TO FAB & INSTALL SUPPORT STRUTS

- RE-INDEX BASE & REPOSITION YOKE FACILITY TO FAB & INSTALL REMAINING (9) SUPT. STRUTS
- PREP FINAL C/O

1775-170W

Figure 12-98 Final Systems Mating Operation

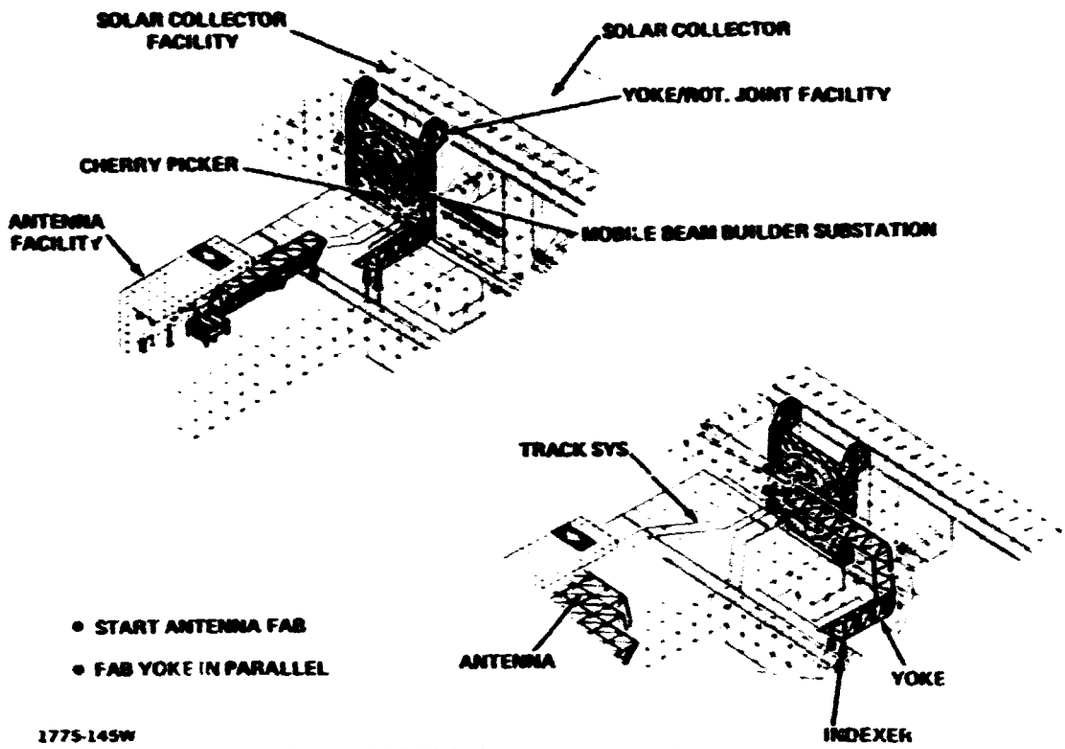

Figure 12-99 Yoke/Rotary Joint Assembly

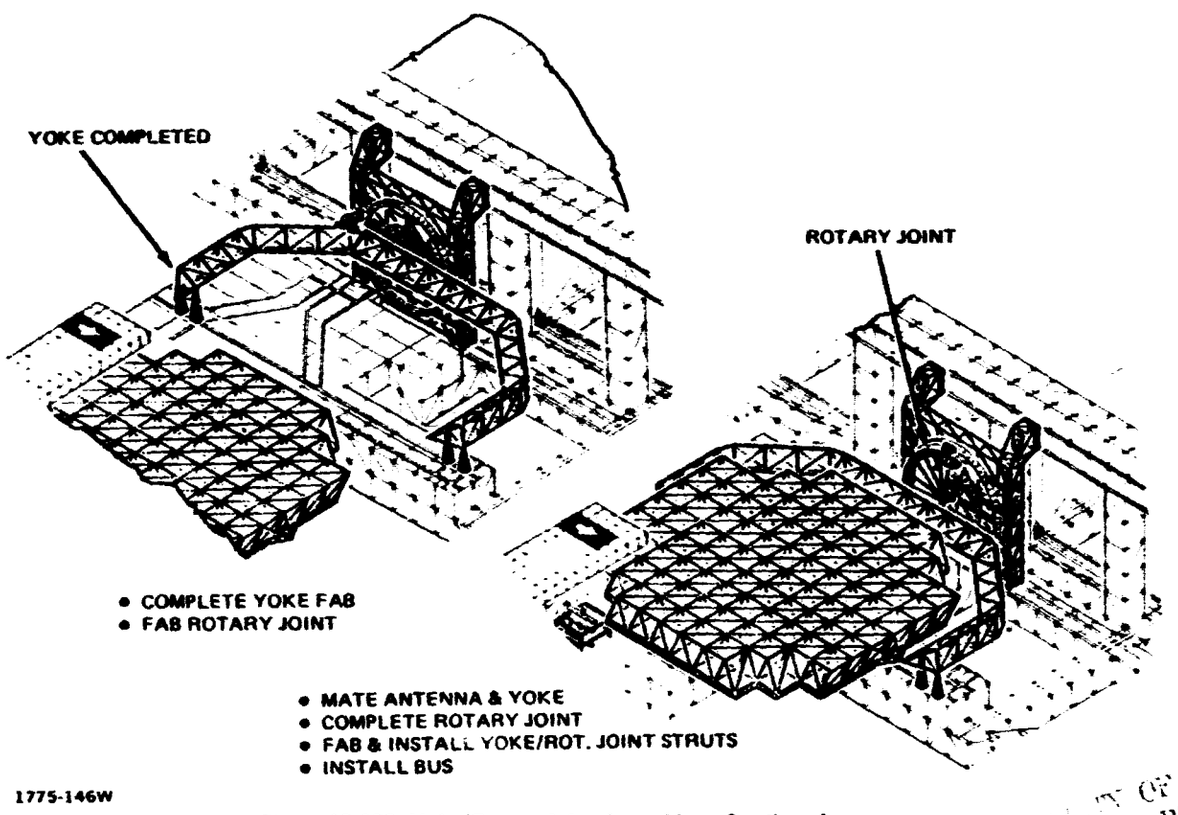

Figure 12-100 Yoke/Rotary Joint Assembly – Continued

REPRODUCIBILITY OF THE ORIGINAL PAGE IS POOR

The final stages of yoke/rotary joint construction are shown in Figure 12-100.

In the first view, the yoke is shown completed and positioned ready to receive the antenna. The construction facility was positioned to the left to complete fabrication of the remaining yoke sections.

In the second view the antenna and yoke have been mated and the yoke, supported entirely by the indexer supports has been separated from the construction facility. The facility is now free to begin fabrication of the rotary joint.

The second view in Figure 12-100 also shows the construction of the rotary joint to be well under way. Cherry picker crane material transporters are used to assemble the rotary joint as they move along circular tracks on both sides of the circular ring beam. Equipment working inside the ring is removed before the last ring segments are installed. When the rotary joint is assembled, the yoke/rotary joint assembly facility is in position to also attach the rotary joint/yoke support struts.

3.5.4 Final System Mating

With the completion of both the antenna/yoke/rotary joint assembly and solar collector assembly the final mating of antenna and collector must be made. To accomplish this mating the following operations have been established. First the base is indexed to the solar collector antenna support strut pick-ups as shown in Figure 12-101. Next the antenna assembly (antenna, yoke, rotary joint) is indexed to align with the collector, and the yoke facility is positioned. Two (2) mobile 7.5m beam builder substations mounted on the yoke facility initiate the fabrication of the out-board support struts (5). These stations align the beam fabrication with the collector-pick up point areas where cherry pickers mounted on the collector facility wait to capture and attach the fabricated struts to the collector attach fittings. The yoke facility mobile cherry pickers perform this same operation in attaching the strut end to the rotary joint pick-up fitting. This procedure is repeated until all five outboard struts are installed. Next the base is re-indexed and the yoke facility is repositioned to fabricate and install the four center line struts. After the struts have been installed, the solar collector power buses are routed along and attached to these struts and final power bus hook-up is made between antenna and collector. With the power bus installation completed, the base and yoke facility are again relocated to align with the five (5) remaining strut pickups and the operations are repeated for the fabrication and installation of these antenna support struts. The remaining operations are those for final satellite checkout.

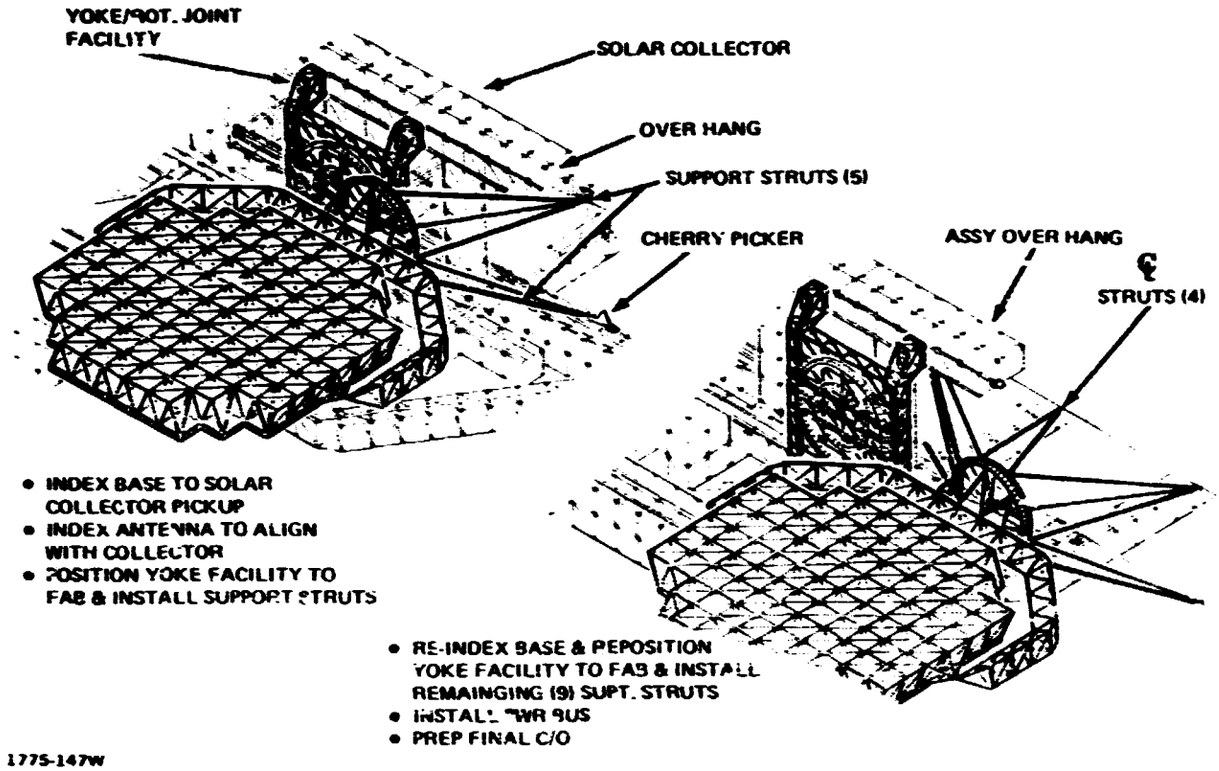

Figure 12-101 Final Systems Mating

3.6 FINAL TEST & CHECKOUT

Once the assembled systems are mated, the GEO Base flight control system will maneuver to expose the SPS solar arrays to full sunlight in the POP flight attitude. Final test and checkout will be automatically performed on the major satellite systems (e.g. attitude control, dc power distribution, and RF phase control). At the conclusion of these tests, the base will be separated from the satellite and transferred to the next SPS construction site as depicted in Figure 12-102. Subsequent satellite power buildup operations will be controlled from the ground.

Figure 12-102 SPS Checkout & Base Transfer

REPRODUCIBILITY OF THE
ORIGINAL PAGE IS POOR

4 - SATELLITE MAINTENANCE OPERATIONS SUPPORT

When SPS power transmission operations begin, the GEO construction base will also be used to support satellite maintenance operations, as previously described in Section II. The GEO base serves as a repair depot for refurbishing defective SPS components . It also serves as a staging depot for the SPS mobile maintenance crew. Figure 12-103 shows the timeline for supporting both operations, when 20 satellites are commissioned.

Figure 12-104 illustrates the maintenance support requirements at the GEO base for OTV operations, pallet loading/off loading and storage operations, and satellite component refurbishment operations. Figure 12-105 shows how the OTV service and SPS component maintenance support functions are added to level J on the GEO base.

In the OTV docking/service area (this is integral with the OTV operations area required to support the construction operations), the POTV's are docked and the crews transferred to their assigned habitat via a crew bus. During the time between the maintenance visits to the 20 SPS's, there will be four maintenance OTV's located in the OTV operations area. The vehicles include a crew module transporter OTV, a flying cherrypicker transporter OTV, and two component transporter OTV's. These vehicles and their payloads are shown in Figure 12-105. Cherrypicker cranes located in the OTV Operations Area are used to stack payloads onto vehicles and to maintain the vehicles.

In the pallet Loading/Offloading and Storage Operations Area, the replacement parts cargo pallets arriving from the EOTV cargo tug handling area, the defective components arriving from the OTV operations area, and the reconditioned components arriving from the refurbishment facilities are processed. Incoming goods are offloaded from pallets onto storage racks. These goods are eventually loaded onto transporters to be taken to the refurbishment facilities. The reconditioned components coming back from the refurbishment facilities are offloaded onto storage racks. Eventually, these components are loaded onto cargo pallets. These pallets are delivered to the OTV operations area for loading onto OTV's which will deliver the goods to the satellites being visited by the traveling maintenance crew.

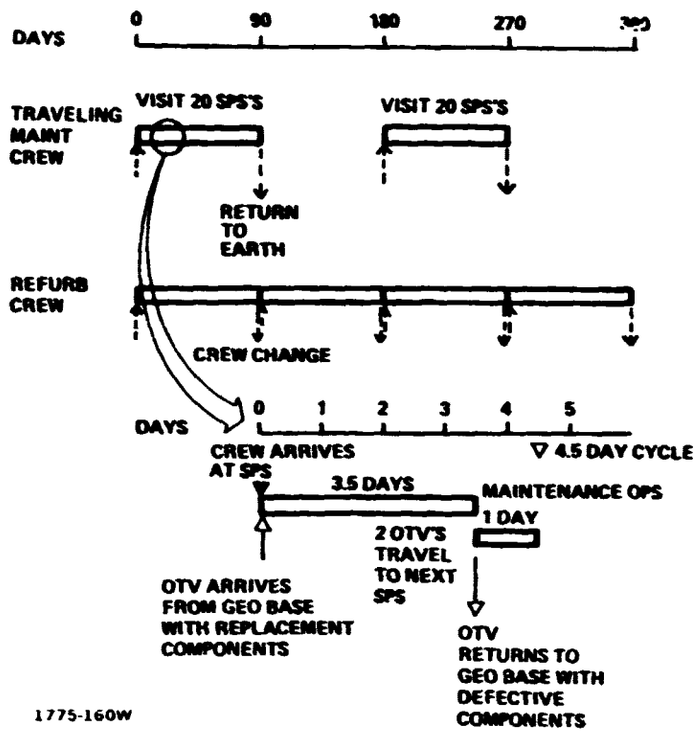

Figure 12-103 SPS Maintenance Timeline

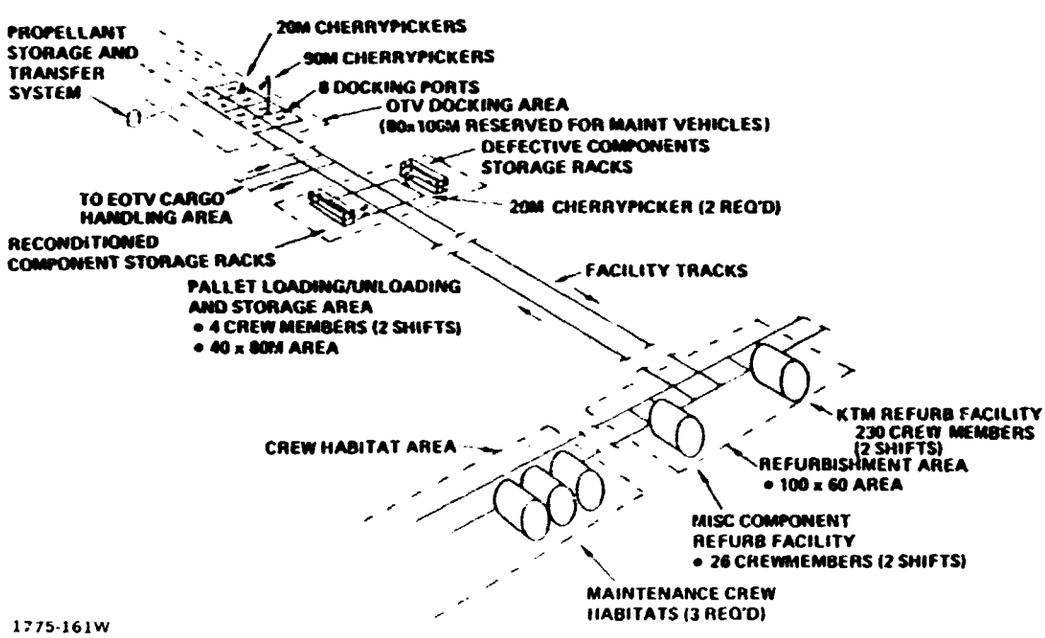

Figure 12-104 Satellite Maintenance Support Provisions at the GEO Base

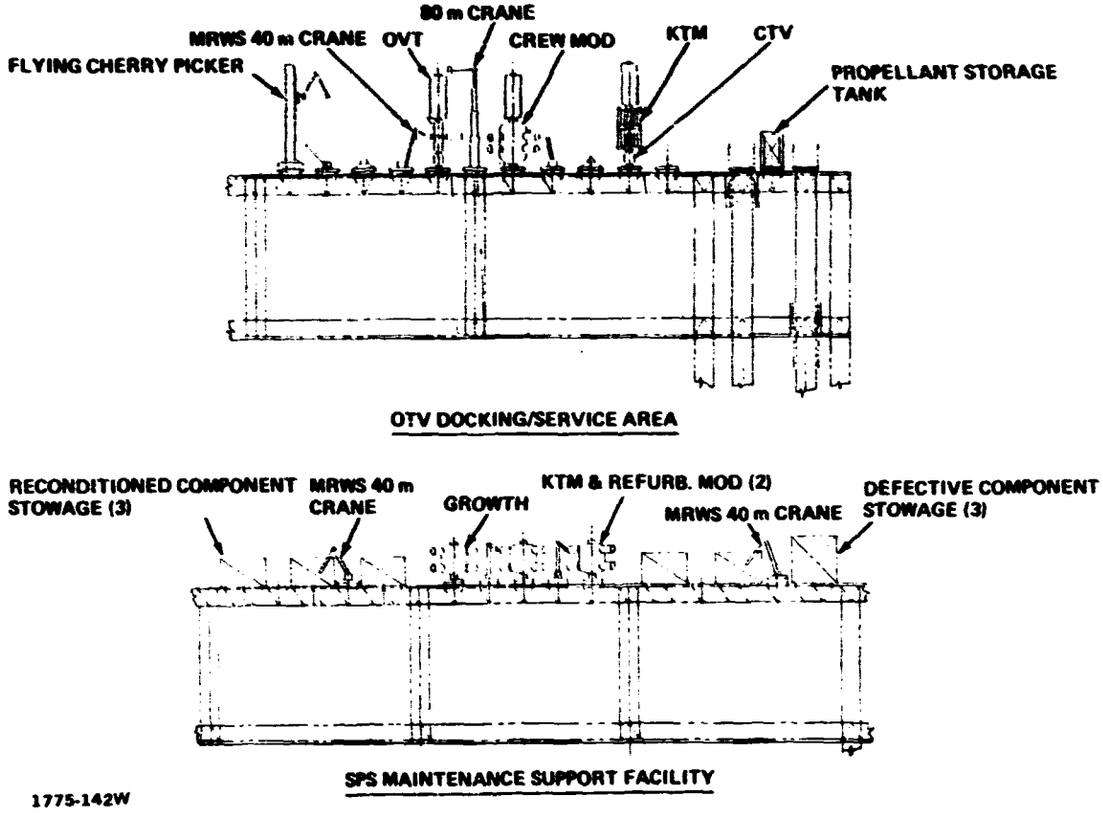

1775-142W

Figure 12-105 OTV Docking & SPS Maintenance Support

In the SPS maintenance support facility, the defective components are processed to recondition them for use. The major refurbishment operation is that associated with processing 6612 klystron tube modules (KTM's) each month. The defective KTM's are offloaded from the cargo transporters and then each one is run through a fault isolation test to diagnose its problems. The KTM's pass through a refurbishment production line where they are torn down to the extent necessary to replace the defective components. After the KTM's are repaired, each one is run through an active operational test to verify the fix. When they have passed inspection, the KTM's are loaded onto a transporter to be returned to the storage area. Other miscellaneous components (e.g., switchgear, disconnect switches, power processors, etc.) are reconditioned in a second module and then returned to storage.

The number of personnel required for SPS maintenance and repair varies with the size of the operational fleet and the maintenance schedule adopted. It is presently planned that scheduled maintenance will be performed on each satellite twice a year, during the fall and spring seasons. When a 20 SPS fleet exists 83 people will be included in the mobile maintenance crew which operates from the GEO base. Another 300 people are needed to perform year around supporting component repair operations at the base. For a 60 SPS fleet, this complement will grow to 249 people on mobile maintenance and 900 people repairing equipment at the base.

5 - EOTV MAINTENANCE SUPPORT

As previously described in Section 10, EOTV support operation at the GEO base include command and control operations for: EOTV approach, station keeping, and departure; EOTV cargo pallet handling and transfer; and EOTV solar array maintenance. The EOTV operations time line at the GEO base is shown in Figure 12-106. The EOTV support systems and required support crew is defined in Figure 12-107. EOTV cargo pallets are handled and transferred to the GEO Base by means of a cargo tug as previously described for LEO base operations. The only planned EOTV maintenance operations to be conducted at GEO is the annealing of the solar arrays.

The method of annealing the EOTV solar array is essentially the same as that employed by the operational satellite. The major operations associated with the EOTV annealing operations are shown in Figure 12-108. In general, the method consists of CO_2 laser systems attached to a gantry that can move across each bay. Each gantry system anneals a 15m strip the entire width of the bay. For EOTV application, 2.5 hours is required per strip with a continuous power requirement of 8.7 MW. The reference system will use four annealing gantries, thus resulting in an annealing time of approximately four days. When using four gantries, two are placed in each of two bays so that power can be drawn from the other two bays to operate the annealing systems. When a given bay has been completely annealed, the gantries will move to a bay that has not been annealed and repeat the annealing operation.

The annealing operations will be remotely controlled/monitored from the GEO Base Command and Control Center. Annealing can be performed at either LEO or GEO, however, such factors as continuous sunlight to generate power and minimum orbit keeping propellant suggest annealing at GEO will be slightly better than if the operation was performed at LEO.

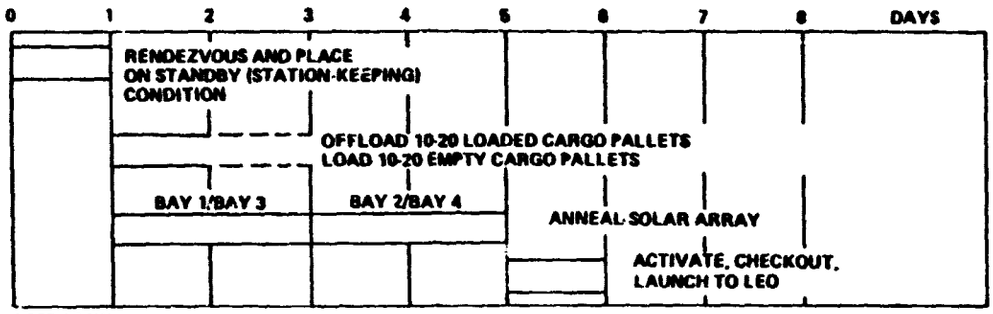

1775-162W

Figure 12-106 EOTV Operations at GEO

VEHICLES

- 2 CARGO TUGS (1 OPERATIONAL & 1 SPARE)
- 20 CARGO PALLET TRANSPORTERS

VEHICLE DOCKING PROVISIONS

- 2 CARGO TUG DOCKING PORTS WITH PROPELLANT TRANSFER SYSTEM

SUPPORT EQUIPMENT

- 2 CARGO PALLET HANDLING FIXTURES

LEO-TO-GEO CARGO TRANSPORTATION SUPPORT CREW AT THE GEO BASE

• CARGO TUG OPERATOR	2 PER SHIFT = 4
• ANNEALING MACHINE OPERATOR	1 PER SHIFT = 2
• EOTV CONTROLLER	1 PER SHIFT = 2

1775-164W

Figure 12-107 GEO Base EOTV Operations Support Systems & Crew Size

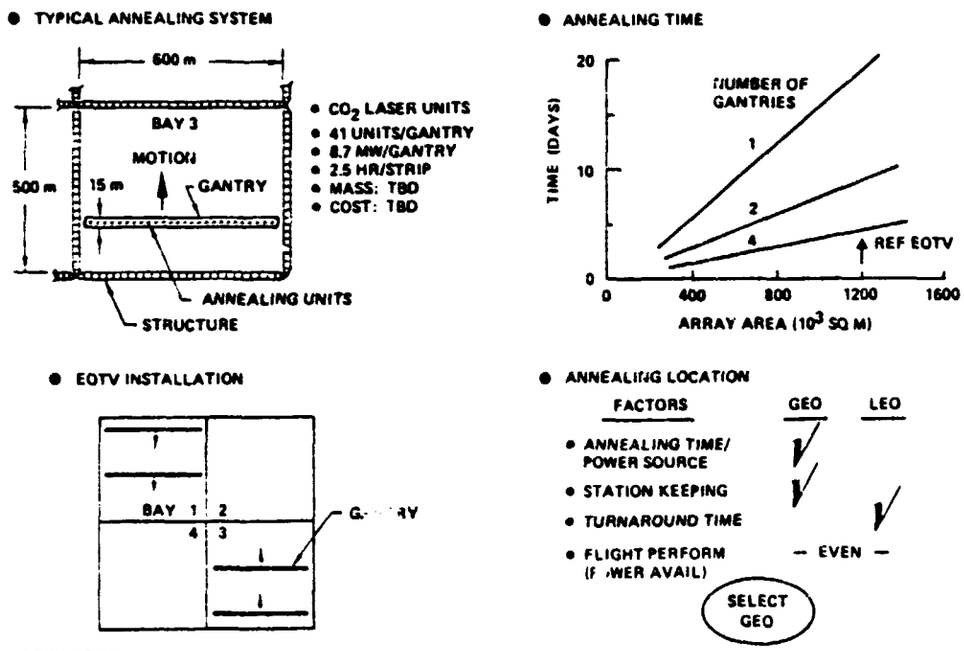

Figure 12-108 EOTV Annealing Operations

6 - INTRA BASE LOGISTICS

The GEO Base, in addition to building the SPS, must fulfill strenuous logistic support requirements as listed in Figure 12-109.

Every thirteen days an EOTV will arrive with large Cargo Pallets. Since the EOTV stationkeeps at least 1 km away as shown in Figure 12-110, a dedicated area must be available at the GEO Base to transfer this material on board in a quick and efficient manner. At the same time, empty pallets have to be removed from the base. As soon as the Cargo Pallets are landed, they have to be moved to an unloading/sorting area and processed through the construction base. To accomplish this, an efficient transport system must be available. Level J, the top deck of the base, provides 6.1 Km of main line track and 5.1 Km of connecting spur lines.

The base has to rotate the 827-man crew at planned intervals. In addition all these people have to be housed comfortably and transported to their assigned work stations each day. Each time a new crew is brought up, resupplies must also be provided.

The other function of the base is to serve as a home base for mobile service of all operational Solar Power Satellites. Defective material on the SPSs must be replaced, brought back to the base and reconditioned. The refurbished material is stored until needed as replacement parts on the next SPS maintenance visit.

- EOTV CARGO DELIVERY
  - 4000 MT UP & 200 MT DOWN/FLIGHT - EVERY 13 DAYS
  - OPERATE & SERVICE 2 CARGO TRANSFER TUGS
  - DOCK & UNLOAD 10 TO 20 CARGO PALLETS
  - PROVIDE PALLET TRANSPORTERS
- POTV GEO CREW ROTATION
  - ROTATE UP TO 75-80 PEOPLE/FLIGHT @ 15-DAY INTERVALS
  - MAINTAIN TRANSIENT CREW QUARTERS
  - DOCK 4 POTVs & PROVIDE INTRA-BASE CREW BUSES
- SPS OPERATIONAL MAINTENANCE SUPPORT (PER 20 SATELLITES)
  - LOAD/UNLOAD SPS COMPONENT RACKS @ 4½-DAY INTERVALS
  - MAINTAIN RECONDITIONED & DEFECTIVE COMPONENT STORAGE
  - DOCK & SERVICE SPS MAINT FLEET (4 OTVs & 4 PAYLOADS)
  - MAINTAIN DTM/COMPONENT REFURB FACILITIES
  - PROVIDE CREW HABITATS

1775-148W

Figure 12-109 GEO Base Logistic Support Requirements

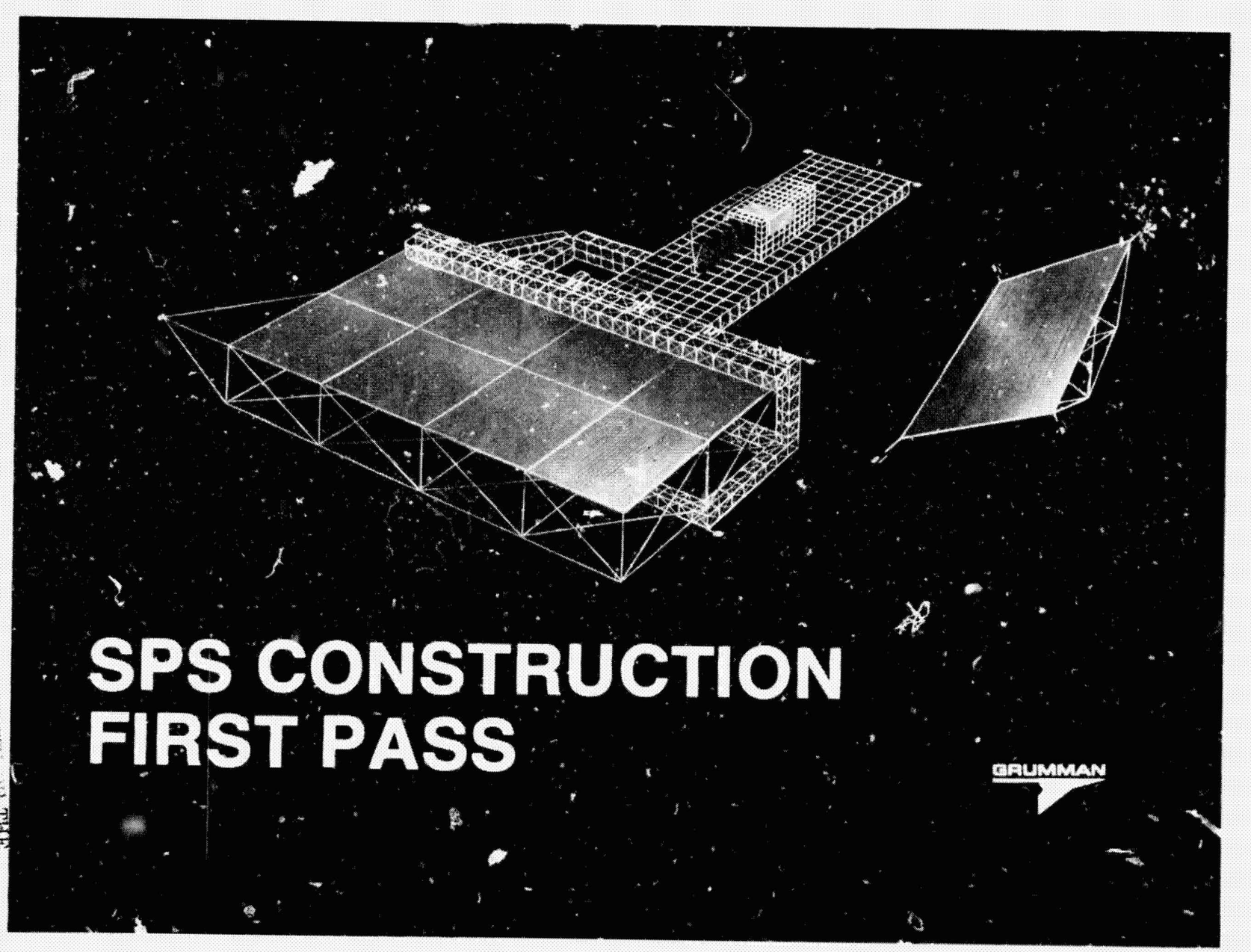

Figure 12-110 SPS Construction First Pass

REPRODUCIBILITY OF THE
ORIGINAL PAGE IS POOR

6.1 CARGO HANDLING & DISTRIBUTION FLOW

EOTV cargo is transferred to the GEO base by a dedicated cargo tug. A tug lifts a cargo or KTM pallet from the EOTV and flies it over to the base cargo docking area, as shown in Figure 12-111. Construction materials, base supplies, OTV supplies and SPS maintenance parts are unloaded onto waiting railroad flat cars adjacent to the docking area. The loaded flat cars are moved onto mainline track to one of five (5) cargo staging areas. When required, the flat car, loaded with construction materials, is moved out of the staging area onto either forward or aft facing vertical elevators. The aft elevators move down to the interface and antenna construction level, whereas the forward elevators move down to energy conversion assembly substations. Other supplies would be moved directly to the appropriate area on level J.

The docked cargo pallets are moved (on its docking pad) to the unloading area which is capable of storing 20 pallets. Mobile 40 meter MRWS cranes are located between each row of parked pallets; they are unloaded in the area onto the empty cargo pallets, and are moved back to the docking area where a tug docks to the top of the pallet. The tug lifts the empty pallet off the railroad docking pad and flies it back to the parked EOTV.

Figure 12-112 identifies eleven levels of the GEO construction base. These levels are identified with letters A through L and their elevations are given in meters from the factory reference line (FRL) at level A.

The figure also lists the total weight of material that has to be delivered to the GEO Base for construction of an SPS. It can be seen that over half of the material landed on the base has to be delivered to Level 'H' for use in assembling the energy conversion system and installing its solar blankets. Two levels were considered as docking areas for delivery of personnel and material. Based on this chart, it is apparent the logistics system is greatly simplified by using Level 'J' for the docking area.

6.2 LEVEL 'J' LOGISTIC OPERATIONS

The center of base activity occurs at the top deck, level 'J'. The material and personnel are brought to this level from the LEO base and the SPS service crew, with their materials, depart from here. In addition, numerous vetically moving transportation devices interface with supplies and personnel here for delivery to the lower levels.

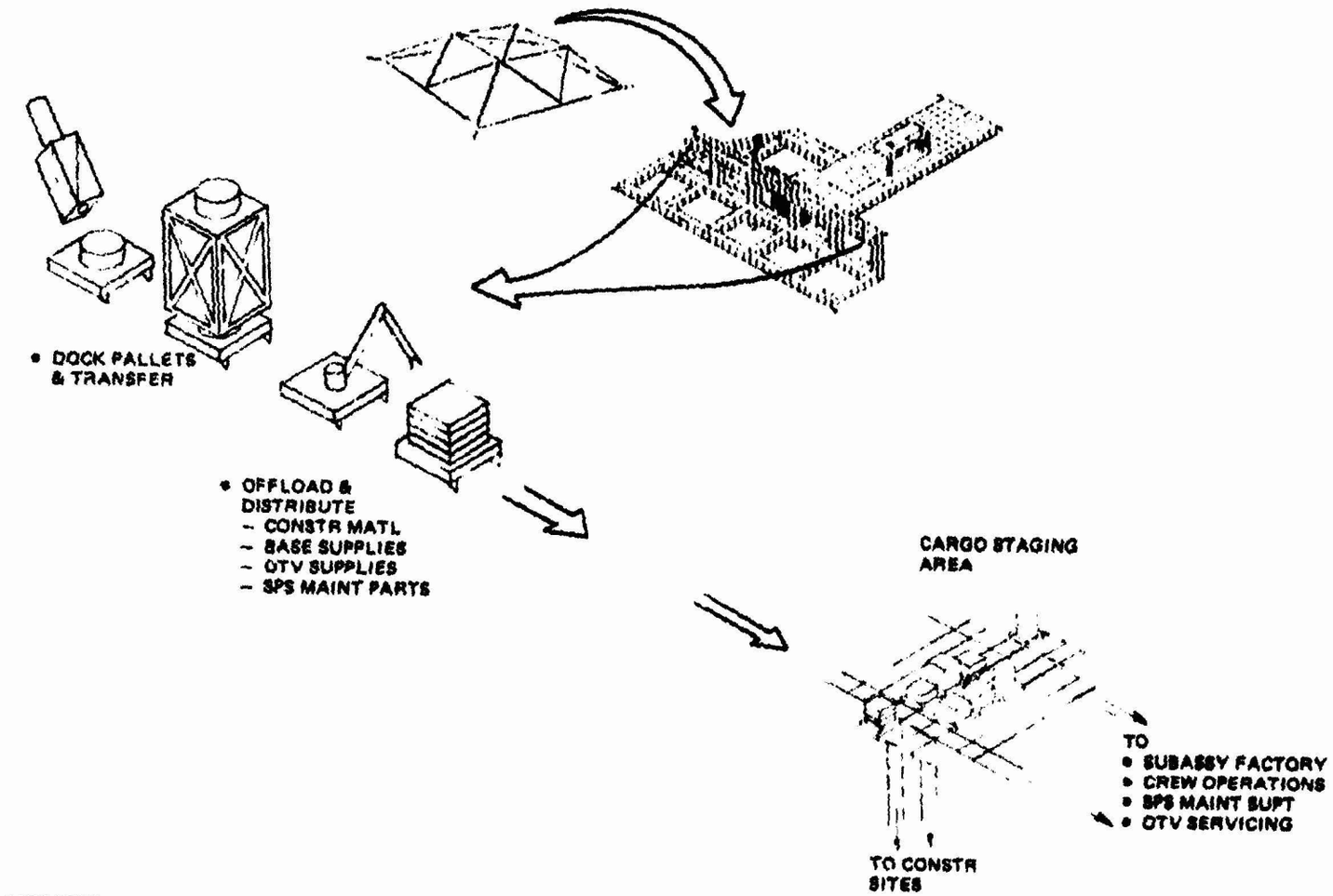

Figure 12-111 GEO Base Cargo Handling & Distribution Flow

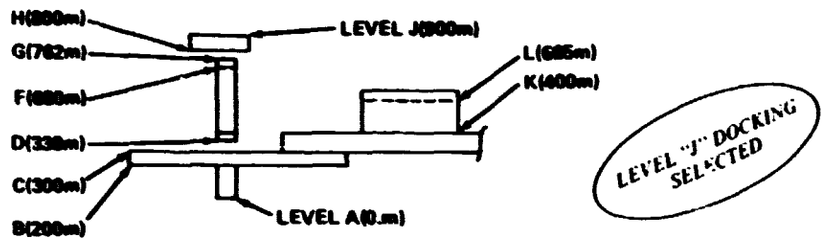

FACTORY LEVEL	CONSTRUCTION OPERATION	TOTAL MAT'L MT	RATE MAT'L USED	INTER LEVEL MASS DISTANCE 10^8 kg-m	
				"B"-DOCK	"J"-DOCK
	ENERGY CONVERSION ASSEMBLY				
H	– SOLAR BLANKET INSTALLATION	23185	725MT/4DAYS	139.1	23.18
G	– STRUCTURE FAB & ASSY	1731	300MT PLUS 42MT/4 DAYS	9.72	2.38
F	– STRUCTURE FAB & POWER BUS INSTL	1845	58MT/4 DAYS	8.86	4.06
D	– STRUCTURE FAB & ASSY	1731	300MT PLUS 42MT/4 DAYS	2.39	9.72
	POWER TRANSMISSION ASSEMBLY				
K	– STRUCT FAB & ASSY & SUBARRAY INSTL	9953	83MT/DAY	19.91	69.67
L	– STRUCT FAB & ASSY & PWR BUS INSTL	2558	21MT/DAY	11.89	24.68
	TOTAL	41000MT		191.87	133.69

1775-143W

Figure 12-112 GEO Base Interlevel Material Transfer Requirements

Level J facilities arrangement is illustrated in Figure 12-113. Starting from the left, the following areas of activity are defined:

- Staging Area - This area is located over the vertical columns of the factory. The sorted and sub-assembled hardwares are stored here until required in the lower construction areas. The loaded flatcars are moved onto vertical lift elevators and then travel down to the appropriate lower construction level work site. The staging area is duplicated in five locations, as noted.
- Cargo Docking/Unloading/Sorting Center - The KTM modules and Cargo Pallets are landed here and unloaded onto railroad flatcars for delivery to their next station
- Subassembly Factory - The hardware in the Cargo Pallets is delivered to this area for subassembly work prior to its movement to the lower levels for installation
- Crew Quarters/Operations Center - This center includes the base habitats and areas for habitat growth.

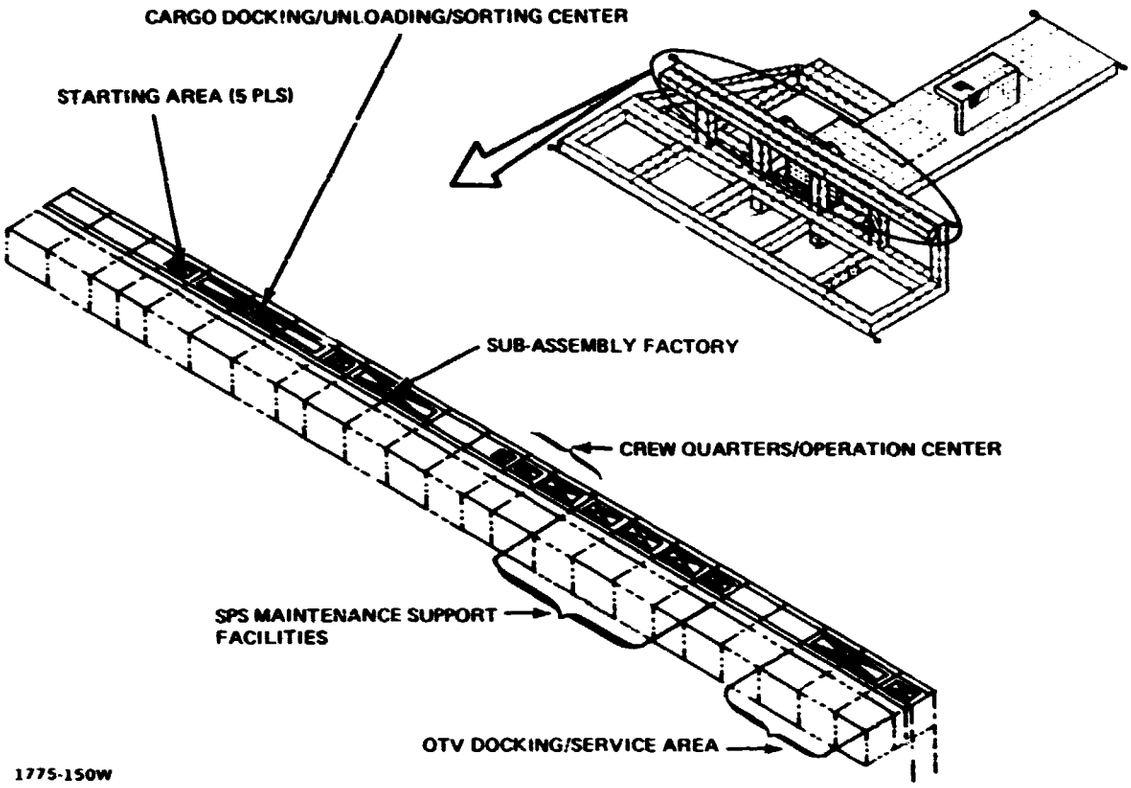

Figure 12-113 GEO Base Level 'J' Facility Arrangement

- Satellite Service Habitat Growth Area - This area has been reserved for growth when 40 satellites are being serviced. This area will be identical in configuration as the habitat area used for servicing 20 satellites.

- Base Construction Habitats & Satellite Service Habitats - This area contains two functional complexes. One area consists of four (4) habitats, one (1) interim habitat and one (1) control center. The other area contains four (4) habitats and one (1) interim habitat. The first complex is used to house and control the base construction personnel and the other for satellite service personnel.

- SPS Maintenance Support Facilities - This complex includes satellite refurbishment factories and component storage

  - Reconditioned Component Storage - Those components which have been reconditioned and repaired in the KTM & Miscellaneous Component Refurbishment Factories are stored here until needed

  - KTM Refurbishment Factory - All defective klystrons from the outlying SPS stations are brought into this module for refurbishment

- Miscellaneous Component Refurbishment Factory - This module has facilities within it for refurbishment of electrical, electronic and mechanical devices. Components are disassembled and assembled, as well as tested, in this area.
- Defective Component Storage - Those components which have to be reconditioned and repaired are stored here. When room and scheduling permits, they are transported from here to the Refurbishment Factories

- OTV/POTV Docking/Service Area - Sufficient docking pads are located here for the landing of POTVs and OTVs. Quantities of propellant for refueling the OTVs are also stored here.

6.2.1 Level J Cargo Docking/Unloading/Sorting Center

The cargo brought from LEO via the EOTV is delivered to the area for storage and processing. KTM pallets and cargo pallets are flown from the EOTV by cargo tugs. Special railed flatcars with docking mechanism are located in the docking center shown in Figure 12-114. A four-man control center (not visible on sketch) is located between the six docking pads. Two are configured to dock KTM pallets, two for cargo pallets, one for a spare tug and the last one is a spare docking pad. After the KTM pallets are docked, they are unloaded with the 75 meter crane onto waiting railroad flat cars. From here they are moved to one of the three (3) staging areas for eventual delivery to antenna levels "K" & "L". The cargo pallets remain on the docking pad and are railed to the unloading area. Five (5) rows (4 deep) provide storage for twenty (20) cargo pallets. Forty (40) meter MRWS cranes located between the rows of stored cargo pallets, as depicted in Figure 12-115, are used to unload the pallets onto waiting flatcars. These flatcars are moved either to one of the five (5) staging areas or to the sub-assembly factory. The loaded flatcars in the staging areas are eventually moved onto the vertical lift elevators for delivery to the lower construction levels.

The empty cargo pallets are moved back to the docking area. An unused tug docks to the cargo pallet and lifts it off level J base for return to the EOTV, station-keeping at least 1 Km away.

6.2.2 Cargo Staging & Distribution System

All material delivered from LEO is delivered to the cargo docking area. From there it is moved in its pallet to the unloading area. Waiting MRWS cranes unload the cargo onto waiting flatcar transporters. Those pieces of hardware requiring build up

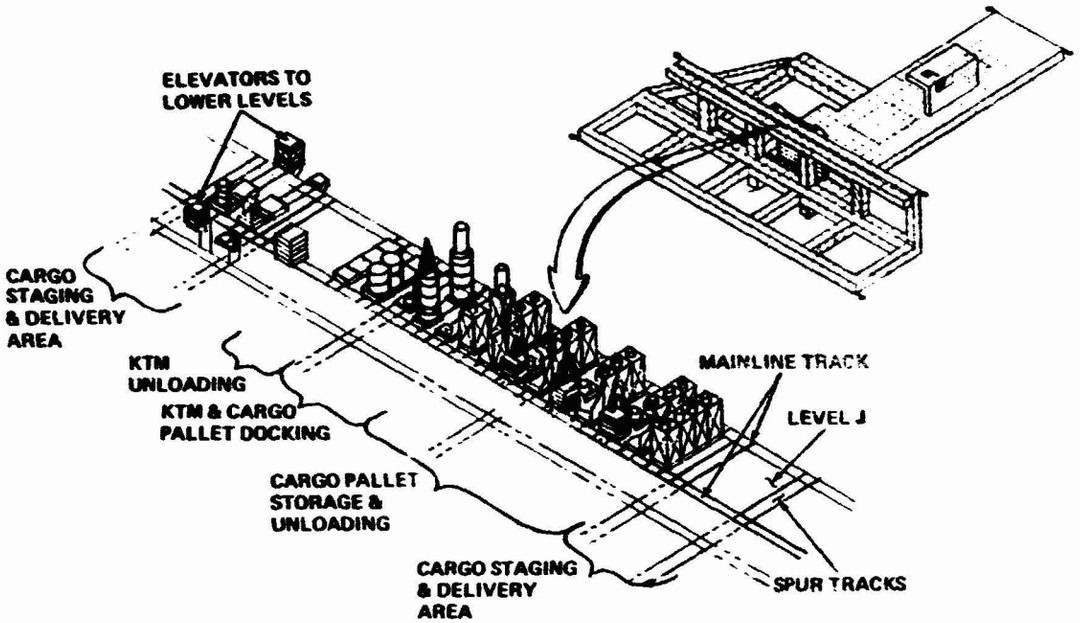

1775-151W

Figure 12-114 Level "J" – Cargo Docking/Unloading/Sorting Center

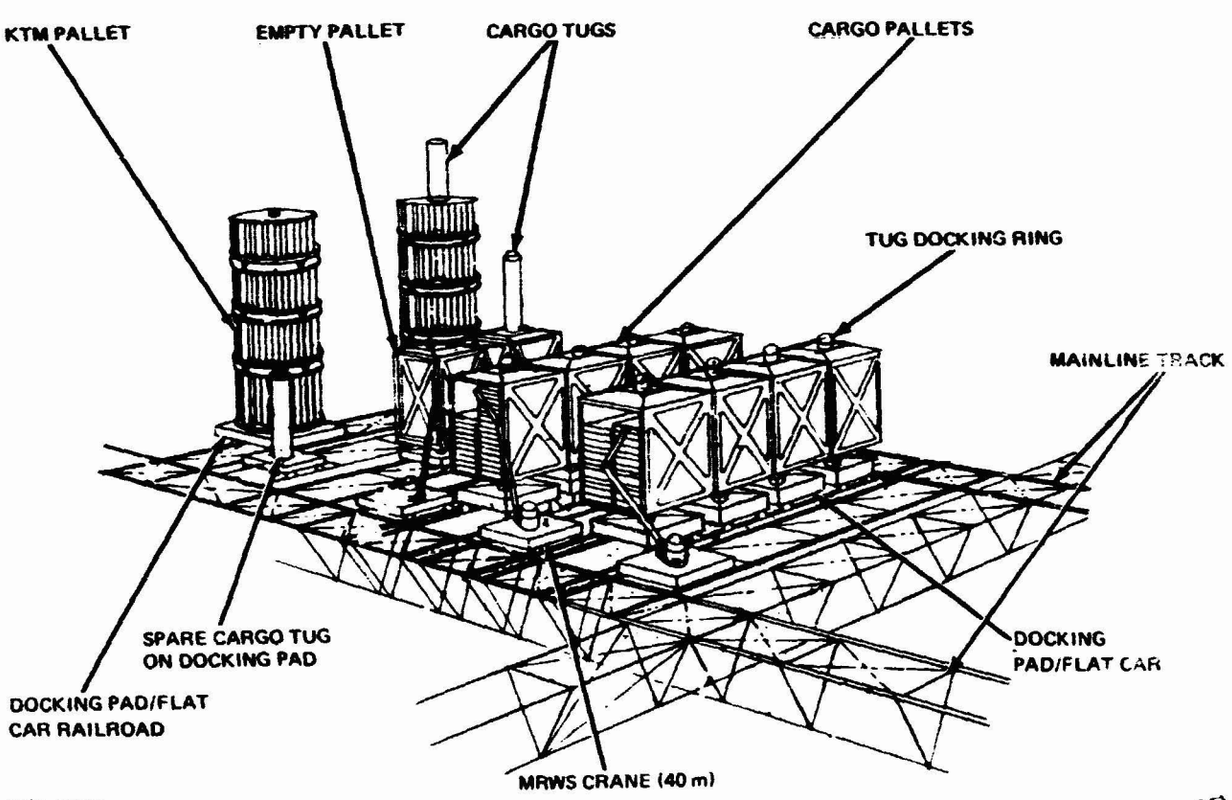

1771-152W

Figure 12-115 Cargo Unloading & Sorting Operation

REPRODUCIBILITY OF THE
ORIGINAL PAGE IS POOR

are moved into the subassembly factory. The sorted hardware and subassembled hardware are then moved to appropriate staging areas (5), as shown in Figure 12-116, and stored temporarily until required in the lower level factory levels. The loaded flatcars are moved out onto one of the vertical lift elevators (16 shown) and lowered to designated factory level. The sketches on the right show a loaded flatcar being delivered to Level "H". In this example, the railroad tracks are 180° to the Level "J" tracks. For this reason, the vertical lift elevator is mounted on a large rotary bearing. The whole loaded flatcar and elevator rotates 180° to put this unit into proper position with the Level "H" tracks. The loaded flatcar can now be moved onto the properly indexed tracks and proceed to designated area at this factory level. The same concept applies to the other lower levels of the factory.

Tables 12-23, 12-24, and 12-25 list the GEO base material distribution breakdown for constructing the energy conversion system, power transmission system and interface system elements respectively.

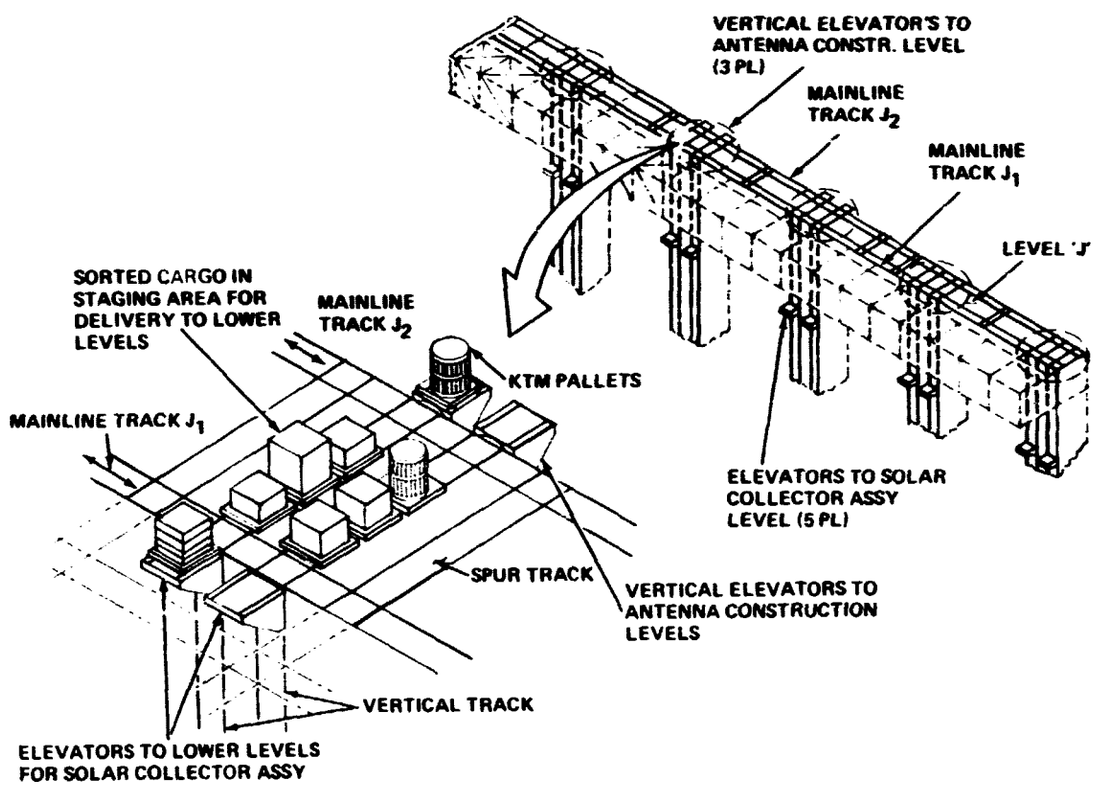

Figure 12-116 Cargo Staging & Distribution System

TABLE 12-23 GEO BASE CONSTRUCTION MATERIAL DISTRIBUTION REQUIREMENTS – ENERGY CONVERSION SYSTEM (Sheet 1 of 2)

OPERATION & EQUIPMENTS	BASE LEVEL	MATERIALS						REMARKS
		TYPE	UNIT SIZE LxWxH	UNIT MASS Kg	UNITS PER MACHINE	1ST PASS SETS	TOTAL SPS SETS	
• STRUCTURAL BEAM FAB								
– 7.5m LONGITUDINAL BEAM BUILDERS								
5 UPPER	G	TYPE B CAP REELS	.75x3.5 DIA	11600	3 EA/SET	5 SETS	9 SETS	1 SET/MACHINE/PASS OR 16 ROWS
		TYPE B BATTEN REELS	.75x2.8 DIA	6900				
		TENSION CABLE REELS	TBD	TBD				
		BATTEN-CAP DISPENSERS	TBD	TBD				
		TRACK MODULE REELS	~ 3.5 DIA	~1000	2 EA/SET			
5 LOWER	D	TYPE B REELS & DISPENSERS AS ABOVE	AS ABOVE	AS ABOVE	3 EA/SET	5	9	1 SET/MACHINE/PASS OR 16 ROWS
– 7.5m MOBILE BEAM BUILDERS								
1 UPPER	G	TYPE B REELS & DISPENSERS AS ABOVE	AS ABOVE	AS ABOVE	3 EA/SET	16	32	1 SET/MACHINE/ROW
1 LOWER	D	TYPE B REELS & DISPENSER AS ABOVE	AS ABOVE	AS ABOVE	1 EA/SET	16	32	1 SET/MACHINE/ROW
– 12.7m UPPER LATERAL BEAM	F	TYPE A CAP REELS	.75x3.8 DIA	14000	3 EA/SET	4	8	1 SET/MACHINE/4ROWS
		TYPE A CAP STRIP REELS	.34x3.8 DIA	4800				
		TYPE A BATTEN REELS	.75x3.5 DIA	11900				
		TENSION-CABLE REELS	TBD	TBD				
		BATTEN-CAP DISPENSERS	TBD	TBD				
		TRACK MODULE REELS	~ 3.5 DIA	~10000	2 EA/SET			
• STRUCTURAL BEAM JOINING								
– 7.5m UPPER LONGITUDINAL BEAM BUILDERS	G	SPACE FRAME CANISTER	9x.8x.6	800	3 EA/SET	5	9	1 SET/MACHINE/PASS OR 17 FRAMES
– 7.5m LOWER LONGITUDINAL BEAM BUILDERS	D	SPACE FRAME CANISTER	9x.8x.6	800	3 EA/SET	5	9	
– 7.5m UPPER MOBILE BEAM BUILDER	G	BEAM END FITTINGS	12.7x7.5x6.5	~ 40	2/BEAM	424	816	MADE IN SUBASSY FACTORY
– 7.5m LOWER MOBILE BEAM BUILDER	D	BEAM END FITTINGS	12.7x7.5x6.5	~ 40	2/BEAM	434	834	
– 12.7m UPPER LATERAL BEAM	F	BEAM END FITTINGS	15x12.7x11	~ 80	2/BEAM	136	252	

1775-049W
(1/4)

TABLE 12-23 GEO BASE CONSTRUCTION MATERIAL DISTRIBUTION REQUIREMENTS – ENERGY CONVERSION SYSTEM (Sheet 2 of 2)

OPERATION & EQUIPMENTS	BASE LEVEL	MATERIALS						REMARKS
		TYPE	UNIT SIZE LxWxH	UNIT MASS Kg	UNITS PER BAY	1ST PASS SETS	TOTAL SPS SETS	
• SOLAR BLANKET INSTALLATION – PROXIMAL ANCHORS	H	SOLAR ARRAY BLANKET CONTAINER (WITH CATENARY & INTERBAY JUMPER)	14.9x1.23x.33	4675	44	2816	5632	176 BOXES PER ROW
• POWER DISTRIBUTION INSTALLATION – BUS INSTALLER	F	MAIN BUS A ROLLS	1.1x2.0D 2.4x2.0 D	7700 & 18500	N.A.	12 EA	12 EA	1 ROLL PER 4 ROW STEP
		MAIN BUS B ROLLS	2.1x2.0 D 2.7x2.0 D	16000 & 20809	N.A.	8 EA	8 EA	
		FEEDER BUS A ROLLS	1.1x1.9 D 1.5x1.9 D	3000 & 5400	N.A.	12 & 24	24 & 48	1 ROLL PER ROW AS REQD
		FEEDER BUS B ROOLS	2.1x1.9 D .7x1.9 D	8100 & 4000	N.A.	8 EA	16 EA	
– 12.7m UPPER LATERAL BEAM	F	TURNAROUND JUMPER BUS ROLLS	.45x1.9 D	1300	N.A.	4	8	1 ROLL PER ROW WHERE REQD
		ACQUISITION JUMPER BUS ROLLS	.45x1.9 D	1300	N.A.	4	8	
		INTRA BAY JUMPERS	12.7m LONG	TBD		2112	4224	
– BUS INSTALLER CHERRY PICKER	G	SWITCH GEAR ASSY PALLETS			6	72	144	24 PALLETS PER ROW (3 ROWS)
		SWITCH GEAR PALLET SUPPORTS	14 m STRUT (4)		6 SETS	72 SETS	144 SETS	PRE ASSEMBLED IN SUB-ASSY FACTORY
• ATTITUDE CONTROL & OTHER	H	THRUSTER YOKE ASSY PROPELLANT PUMBING RADIATOR COMPO-NENTS PROPELLANT TANK PALLETS			N.A.	2	4	PRE ASSEMBLED IN SUB-ASSY FACTORY
	?	DATA PROCESSORS & BUS COMM ANTENNA OMNI S-BAND COMP & ANTENNA						

1775-049W
(2/4)

TABLE 12-24 GEO BASE CONSTRUCTION MATERIAL DISTRIBUTION REQUIREMENTS – POWER TRANSMISSION SYSTEM

OPERATION & EQUIPMENTS	BASE LEVEL	MATERIALS					REMARKS
		TYPE	UNIT SIZE LxWxH	UNIT MASS Kg	UNITS PER MACHINE	TOTAL SPS SETS	
• STRUCTURAL BEAM FAB							
– 7.5 m MOBILE BEAM BUILDERS							
1 UPPER	L	TYPE B CAP REELS	.75x3.0 DIA	8500	3EA/SET	5 SETS	
		TYPE B-BATTEN REELS	.75x2.4 DIA	5100			
		TENSION CABLE REELS	TBD	TBD			
		BATTEN CAP DISPENSERS	TBD	TBD			
1 LOWER	K	TYPE B REELS & DISPENSERS AS ABOVE	AS ABOVE	AS ABOVE	3EA/SET	5 SETS	
• PRIMARY STRUCTURE BEAM JOINING							
– UPPER CHERRY PICKERS	L	BEAM JOINT	TBD	~ 3	N. A.	109	
– 7.5 m UPPER MOBILE BEAM BUILDER	L	BEAM END FITTINGS	12.7x7.5x6.5	~ 40	2/BEAM	372	MADE IN SUBASSY FACTORY
– 7.5 m LOWER MOBILE BEAM BUILDER	K	BEAM END FITTINGS	12.7x7.5x6.5	~ 40	2/BEAM	362	
– LOWER CHERRY PICKERS	K	BEAM JOINT	TBD	~ 3	N. A.	98	
• SECONDARY STRUCTURE ASSEMBLY							
SECONDARY STRUCTURE INSTALLATION SYSTEM	K	TELESCOPED STRUCTURE	20x5.4x5.4	1928	1	88	
• SUBARRAY PANEL DEPLOYMENT							
SUBARRAY DEPLOYER	K	SUBARRAY PANELS	10.4x10.4x.3	1300	20/RACK	361 RACKS	
PHASE CONTROL WIRING INSTALLER	K	PHASE CONTROL WIRE REELS	TBD	TBD			
• POWER DISTRIBUTION INSTALLATION							
– BUS INSTALLER	L	MAIN BUS ROLLS	2.75x3 DIA	29000	1	14	
– BUS INSTALLER CHERRY PICKER	L	BUS SUPPORT STRUCTURE	TBD	TBD	N. A.	~109	PREASSEMBLED IN SUB-ASSY FACTORY
		SWITCH GEAR ASSY PALLETS	2x1x1	408	N. A.	456	
		DC-DC POWER PROCESSES	3x2x1	100	N. A.	228	

1775-049W
(3/4)

TABLE 12-25 GEO BASE CONSTRUCTION MATERIAL DISTRIBUTION REQUIREMENTS – INTERFACE (YOKE)

OPERATION & EQUIPMENTS	BASE LEVEL	MATERIALS					REMARKS
		TYPE	UNIT SIZE LxWxH	UNIT MASS Kg	UNITS PER MACHINE	TOTAL SPS SETS	
• STRUCTURAL BEAM FAB – 7.5 m MOBILE BEAM BUILDERS (2 MACHINES)	R1-5	TYPE B CAP REELS TYPE B BATTEN REELS TENSION CABLE REELS BATTEN CAP DISPENSERS	.75x3.0 DIA .75x2.4 DIA TBD TBD	8500 5100 TBD TBD	3EA/SET	4 SETS	2 SETS PER MACHINE ROTARY JOINT SUPPORT STRUTS ANTENNA SUPPORT STRUTS & ANTENNA YOKE (32000 m)
• STRUCTURAL BEAM JOINING – ROTARY JOINT FACILITY CHERRY PICKERS	R1-2	BEAM JOINTS (YOKE)	TBD	~ 3	N. A.	66	PREASSEMBLED IN SUB-ASSY FACTORY
– 7.5 MOBILE BEAM BUILDERS	R1-5	BEAM END FITTINGS	12.7x7.5x6.5	~40	2/BEAM	228	
• ROTARY JOINT ASSEMBLY – CHERRY PICKERS	R1-5	CIRCULAR BEAM CHORDS BATTENS & DIAGONALS	20x1.0 DIA 19.4x1.0 DIA 17.3x1.0 DIA			60 SETS	
		ROLLER ASSEMBLIES	.2x.2x.2		2/SET	48 SETS	
		SLIP RING ASSY	11.7x16 DIA	12000	N. A.	1	
• POWER DISTRIBUTION – BUS INSTALLER	R1-5	MAIN BUS ROLL	2.75x3.0 DIA	29000	N. A.	~20	3620 m

1775-049W
(4/4)

Table 12-26 lists the annual resupply requirements for operating the GEO base.

6.2.3 GEO Base Personnel Distribution & Transfer

Figure 12-117 illustrates the distribution of GEO Base personnel during a typical work shift. Approximately (5) people are located in cherry pickers at Level "D" working on the Solar Collector. Another eleven (11) people are located in various assembly devices at Level "G", working on the collector assembly and energy conversion assemblies. Thirty (30) people are working on the antenna and are far away from the central home base. The remainder of the people are located throughout Level "J". About five hundred people are located in the eight (8) Habitats. They are either off duty or working within these Habitats. Seventy-three (73) people are working in the Control Center; all facets of the GEO Base and SPS are controlled from this area. The Refurbishment Modules house one hundred forty-three (143) people.

Personnel can move about the GEO Base in three different modes of transportation. Quick and direct movement can be accomplished using a MRWS type of free flyer. This vehicle can carry two people and limited hardware to almost any location on the Base or Satellite. The crew can work at the site while in shirt sleeve attire inside the MRWS. Some work tas. will require that the crew get into close areas that are inaccessible by other means. In this mode the crew member will don a GEO EMU and MMU and traverse short distances to the work site.

For movement of personnel, a railed bus is used. The flatcar Bus Transporter operates on the 12.5 meter track system, providing movement of people and supplies. One Transporter shown is sized to move large numbers of people from the POTV to the Habitats while the other is sized to move a small amount to the various work stations each day.

The Bus Transporters can reach the berthing ports on all modules while moving on spur tracks between mainline J1 and J2 tracks.

6.2.4 Crew Quarters/Operations Center

The crew quarters and operations center shown in Figure 12-118 contains all the pressurized modules for crew living and control of the base complex. Six large modules are grouped together in a geometric pattern and interconnected with tunnels. Four of these modules are used for habitats for four hundred (400) persons. Two modules (identical in size) are situated between these habitats, one is used as a base operations control center and the other is used as an interim habitat for one hundred (100) transients. Berthing points (30) are located on these modules for attachment of spacelab

TABLE 12-26 GEO BASE ANNUAL RESUPPLY REQUIREMENTS

RESUPPLY ITEM	ANNUAL RESUPPLY (W10% CONT)—MT			RATIONALE	REF.
	CONSTR OPS 444 CREW	SPS MAINT OPS 383 TO 1149 CREW			
• CREW SUPPLIES	(418)	(361) TO	(1081)		
– FOOD	313	270	809	DETAIL EST	PH-II MPR NO. 6
– HOUSEKEEPING & OTHER ITEMS	105	91	272	PRIOR STUDIES	PH-II MPR NO. 7
• CREW MODULE SUPPLIES	(190)	(151) TO	(454)		
– ECLS O_2, N_2 & H_2O	99	79	237	ESTIMATE	PH-II MPR NO. 6
– ECLS LIFE LIMITED PARTS	80	64	193	ESTIMATE	PH-II MPR NO. 6
– OTHER SUBSYS PARTS	11	8	24	GUESS (2%/QTR)	
• WORK MODULE SUPPLIES	(126)	(108) TO	(323)		
– OPNL CTR (O_2, N_2 & PARTS)	36	------	------	SCALED TO HABITAT	PH-II MPR NO. 7
– MAINT MOD.	54	108	323	SCALED TO HABITAT	PH-II MPR NO. 7
– MISC. MOD.	36	------	------	SCALED TO HABITAT	PH-II MPR NO. 7
• WORK FACILITY SUPPLIES	(398)	(TBD)	(TBD)		
– CONSTR EQUIP PARTS	37			GUESS (2%/QTR)	PH-II MPR NO. 7
– CARGO HDLG/DIST. PARTS	32	------	------	GUESS (2%/QTR)	PH-II MPR NO. 7
– CREW GUS (O_2, N_2)	7	------	------	SHUTTLE LEAKAGE	PH-II MPR NO. 7
– SUBASSY FACTORY, PARTS	3	------	------	GUESS (2%/QTR)	PH-II MPR NO. 7
– REMOTE WORK STA. (O_2, N_2 & PARTS)	145	TBD	TBD	MRWS EST	PH-II MPR NO. 7
– BASE SUBSYS PARTS	75	------	------	GUESS (2%/QTR)	PH-II MPR NO. 7
– BASE FLT CTL PROPELLANTS	99	------	------	ESTIMATE	PH-II MPR NO. 7
– BASE MAINT & TEST PARTS	TBD	------	------		
– TRANSPORT VEH MAINT PARTS	TBD	------	------		
– SPS MAINT SUPT PARTS	-----	TBD	TBD		
TOTAL	1125	620 TO	2478		

1775-157W

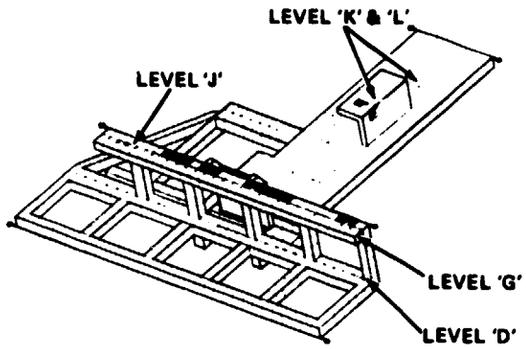

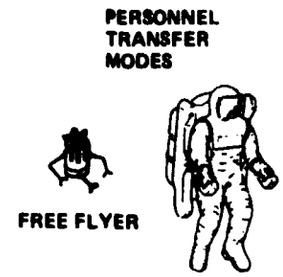

LEVEL 'J' ACTIVITY	PEOPLE/SHIFT
HABITATS & CONTROL CENTER	565
WORK AREAS	73
REFURBISHMENT MODULES	143
LEVEL 'K' & 'L' ACTIVITY	
• ANTENNA FACILITY	30
LEVEL 'G' ACTIVITY	
• ENERGY CONVER. ASSY	11
LEVEL 'D' ACTIVITY	
• COLLECTOR ASSY	5
TOTAL	827

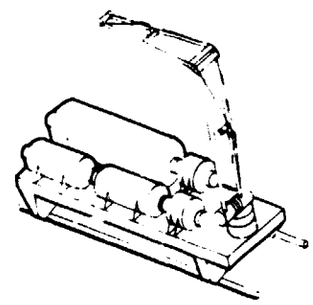

1775-154W

Figure 12-117 GEO Base Personnel Distribution & Transfer Concepts

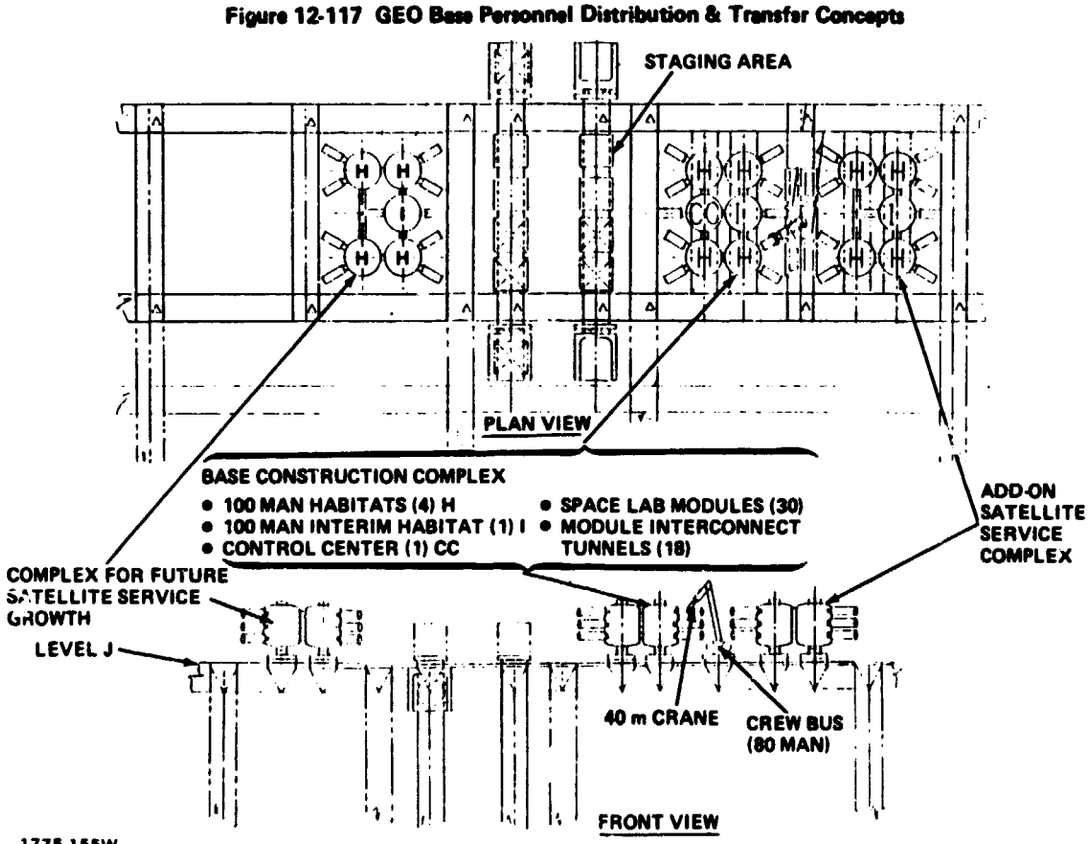

1775-155W

Figure 12-118 Crew Quarters & Operation Center

REPRODUCIBILITY OF THE ORIGINAL PAGE IS POOR

modules such as airlock, resupply, waste disposal. expendables, passenger delivery, and vehicle transfer. Since these modules are all interconnected, transfer between modules can be accomplished in shirt sleeve attire. This grouping is used to house the personnel that are required to work and control the operations of the base construction complex.

Adjacent to this aforementioned complex, but not connected to, is another grouping of large modules. These five modules are used to house up to four hundred (400) people and one hundred (100) transients required to maintain and service twenty (20) satellites. Again, the modules are inter connected with tunnels and also have berthing ports for attachment of twenty-seven (27) spacelab modules.

An additional area has been established for the installation of five (5) more large modules. They are configured the same as the five (5) previously mentioned. This complex is added at some future date when forty (40) satellites are being serviced. When sixty (60) satellites are serviced the first group of habitats used for base construction can be used to house the additional personnel. There is ample room to even add another new complex and abandon the first group of habitats, if desired.

The habitat complexes are all bordered with spur line railroad tracks. In this manner operation buses with supplies and people can be interchanged with the 40 meter MRWS crane on the bus transporter.

REPRODUCIBILITY OF THE
ORIGINAL PAGE IS POOR

SECTION 13
SATELLITE MAINTENANCE

		Page
1.0	Introduction	13-1
2.0	Maintenance Access Systems	13-3
3.0	Maintenance Concepts for Some Selected Component	13-18
4.0	GEO Base Maintenance Support Systems and Operations	13-29
5.0	Integrated Satellite Maintenance Operations Plan	13-42

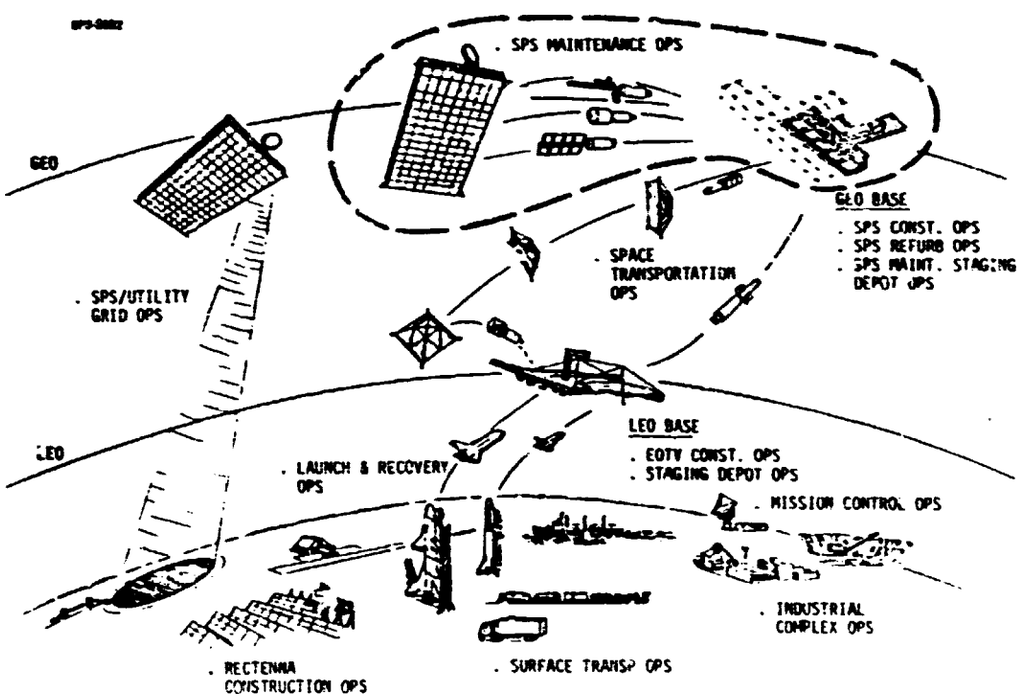

SECTION 13
SATELLITE MAINTENANCE

1.0 Introduction

There were four main subtasks to the satellite maintenance analysis task: (1) definition of the maintenance access systems that would be used for getting maintenance equipment to all locations on the satellite where maintenance will be performed (see Section 2); (2) definition of the maintenance plans for some selection components (see Section 3); (3) definition of the maintenance support facilities, equipment, crew, and operations that would be located at the GEO base (see Section 4); and (4) creation of an integrated maintenance operations plan (see Section 5).

The general guidelines that were used during this study are summarized in Table 13-1.

Table 13-1

SPS MAINTENANCE GUIDELINES

- Analysis based on 5 GW SPS, 20 SPS's in orbit
- Utilize maintenance concepts defined in earlier studies [1]
  - Semi-annual maintenance
  - 3½ days available for completing maintenance and 1 day for travel between satellites
  - 20 work hours per day @ .75 productivity (2 shifts) = 52.5 work hours available
  - Maintenance crew home base is the GEO base
  - Refurbishment of components at GEO base
  - Chem OTV's used to transport crews and equipment between GEO Base and the satellites.
- Provide track-mounted maintenance vehicle access to components that meet one or more of the following criteria:
  - High failure rate components
  - Component too large for EVA handling
  - Multiple number of different types of components could be accessed from the same track
  - Vehicle track system built in for other operational purposes (e.g., solar array annealing machines)
  - Access by free flying vehicles not feasible due to unacceptable vehicle maneuvering envelope, no means available to anchor the vehicle, or unacceptable propellant gas contamination.
- Every component will be designed for maintainability
- Solar array blankets will be replaced only during a major overhaul
- Time conservation is mandatory; wherever feasible
  - Fault isolation performed prior to arrival of crew
  - Minimal calibration, test and checkout performed after components replaced
  - Replace components at a LRU level that requires least time
- Use multipurpose maintenance machines (e.g., cherrypickers, component transporters, tools, support equipment
- Use consistent maintenance techniques, common fasteners and connectors, etc.

[1] Reference: WBS 1.3.3 in Part III Preferred Concept System Definition, D180-24071-1, Contract NAS9-15196.

2.0 MAINTENANCE ACCESS SYSTEMS

The fundamental premise in the maintenance access systems analysis was that every SPS component (except structural members) must have a maintenance equipment access provision (even those components which have a negligible failure rate). It was deemed prudent to force this requirement so that unexpected failures could be attended to.

It was found that there were 10 general maintenance access requirements, see Table 13-2. The alternative maintenance access systems for each of these locations is given in this table. It turns out that these 10 access requirements can be satisfied by combinations of built-in tracks, a flying cherrypicker, a rotary boom, and some gantries. Figure 13-1 illustrates the general location of these systems. Each of these access systems are described in detail below.

Solar Array Top Surface Access Systems

Figure 13-2 illustrates the configuration of some of the components to be serviced from the top surface of the solar collector.

The baseline satellite has a requirement for some solar array annealing machines (WBS 1.1.1.6) which would be mounted on gantries which can traverse over the top surface of the solar collector. There are four of these gantries that operate on a built-in track network on the satellite. These gantries and tracks provide a ready-made maintenance access system for getting to the entire upper surface of the solar collector. It will be necessary to get a maintenance cherrypicker onto the gantries to perform maintenance on the solar array components (tensioning devices, catenary cables, and cell string blocking diodes).

Figure 13-3 illustrates the concept. A flying cherrypicker (to be described in detail later) would rendezvous with a gantry to which is attached a flying cherrypicker carriage. This carriage has a docking interface to which the cherrypicker would mate. This carriage would then traverse across the gantry as required. A flying cherrypicker was employed as there are not enough maintenance tasks to warrant the expense of a permanent cherrypicker installed on each gantry.

TABLE 13-2
MAINTENANCE ACCESS PROVISIONS

	Location	Maintenance Operations	Alternative Access Systems
1.	Main Power Busses	Main bus repair Switch gear replacement Blocking diode replacement	Flying cherrypickers mounted on annealing machine gantries Track-mounted flying cherrypickers
2.	Solar Collector Non-Midline Bay Ends (including outside edges)	Blanket tensioning device replace Blanket mechanical attachment replace Jumper bus repair	Cherrypickers mounted on annealing machine gantries Track-mounted cherrypickers
3.	Attitude Control System	Electric thruster system repair Chem thruster system repair	Track-mounted cherrypickers Long-boom (500 meter) cherrypicker Free-flyer Platform-mounted flying cherrypicker
4.	Interface Structure Upper Surface	Main bus repair	Track-mounted cherrypicker Free-flyer
5.	Mechanical Rotary Joint Decimeter	Drive mechanism repair Drive motor repair	Hub-mounted boom with flying cherrypicker

D180-25461-3

TABLE 13-2

MAINTENANCE ACCESS PROVISIONS

(Continued)

	Location	Maintenance Operations	Alternative Access Systems
6.	Slip Ring Assembly	Slip ring shoe replace Mechanical drive replace Drive motor replace Bus repair	Hub-mounted boom with flying cherrypicker
7.	Yoke (Power Bus Side)	Power bus repair Elevation joint mechanism repair	Track-mounted flying cherrypickers Free-flyer
8.	Antenna Back Face	Power bus repair Switch gear repair	Gantries with flying cherrypickers
9.	Antenna Primary Structure Interior	Power conductor replace	Free-flyer Gantries with flying cherrypickers
10.	Antenna Front Face	Klystron Tube Module Phase control system repair	Maintenance gantries defined in the earlier study

D180-25461-3

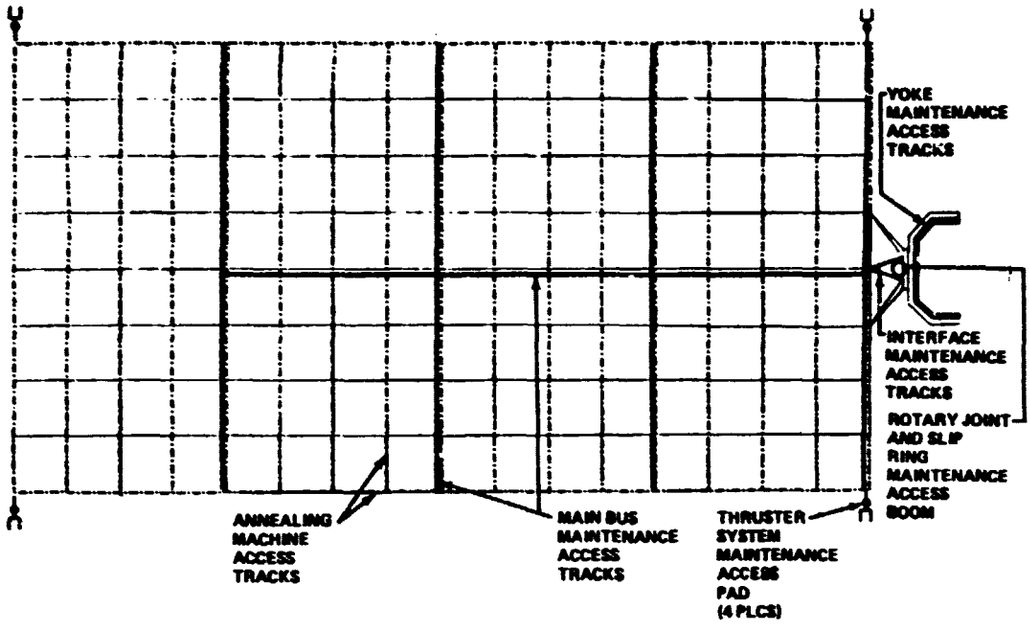

Figure 13-1. SPS Maintenance Access Systems

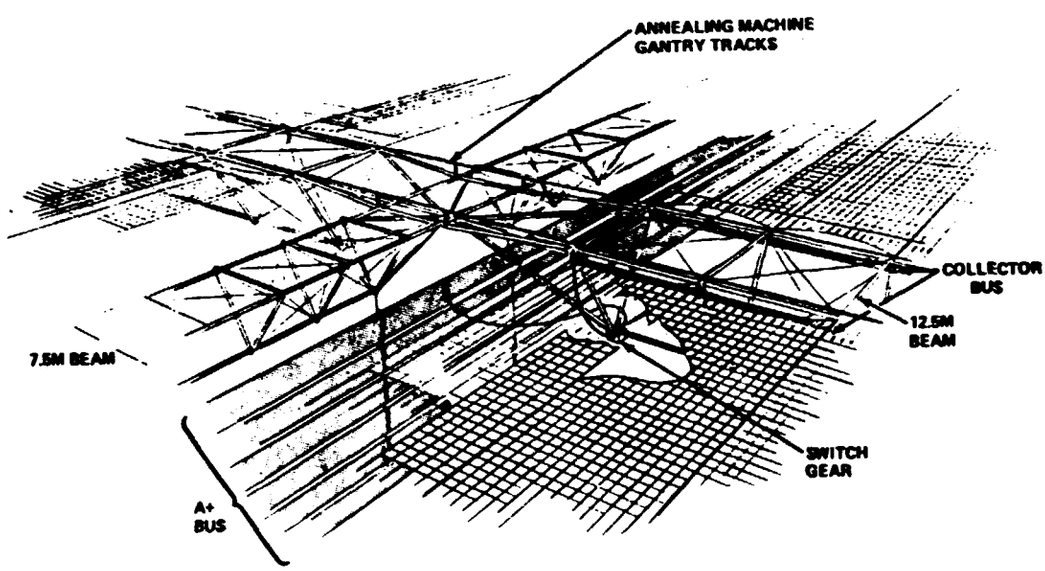

Figure 13-2. Power Collector Configuration

REPRODUCIBILITY OF THE
ORIGINAL PAGE IS POOR

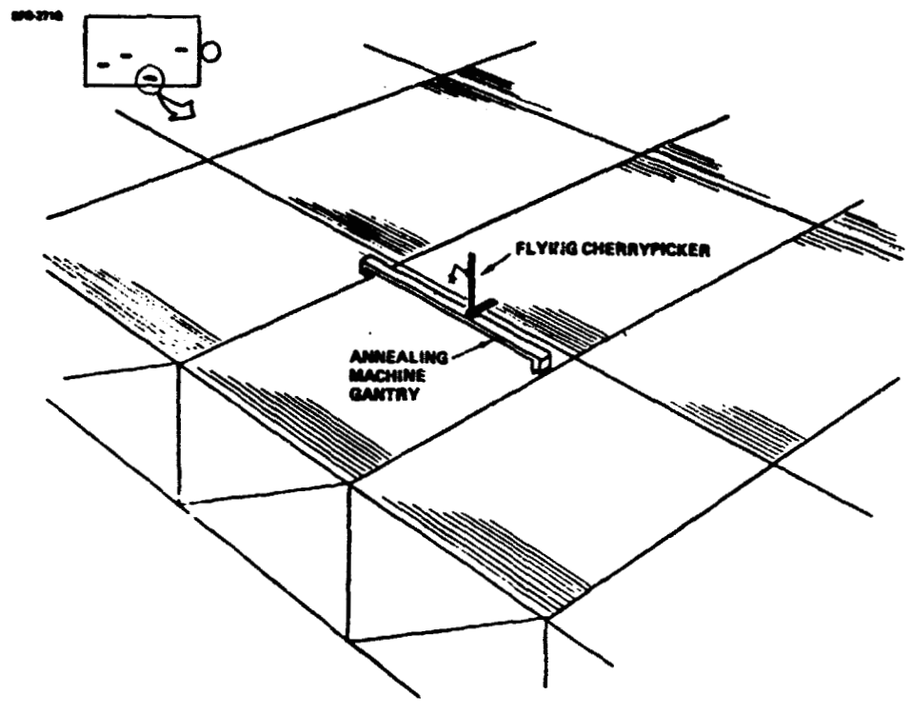

Figure 13-3. Solar Array Top Surface Maintenance Access System

Figure 13-4 illustrates a closeup view of the built-in track and a gantry carriage. The gantry carriage interfaces with the track via carriage bogey assemblies (WBS 1.2.1.1.3.3) which provide the capability for the carriage to move in orthogonal directions.

Main Power Bus Access System

The main power busses are suspended on a cable-support system below the upper surface of the solar collector. These busses are not accessible by a cherrypicker mounted on the annealing machine gantry for two reasons: (a) a cherrypicker could not find a clear path through the structural beams (there are cable stays in the beams) and there is no room between the ends of the solar arrays and the beams, and (2) the main bus stack could be as much as 60 meters tall. Subsequently, the main busses and the switchgear assemblies must be accessed from below the solar array surface.

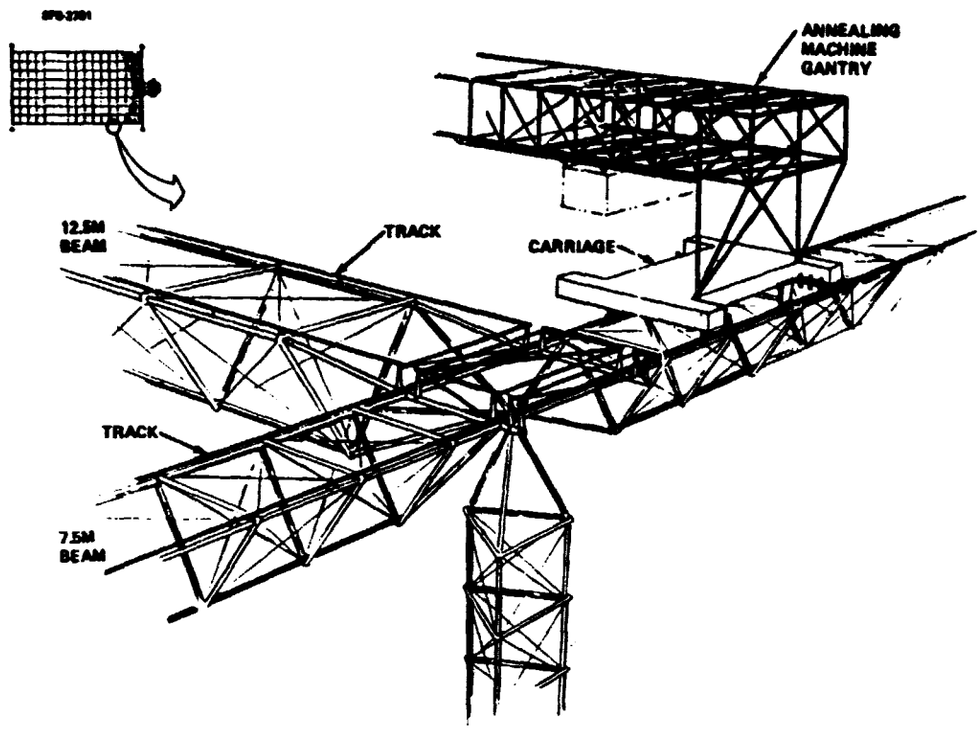

Figure 13- . SPS Maintenance Track Intersection Concept

Figure 13-5 illustrates the main bus access concept. A track beam is required that would parallel the main busses (see Figure 13-1 for the general pattern of these track beams). The track beam is tied into the parallel SPS structural beam to provide torsional rigidity. Each of the legs of this track system would have a flying cherrypicker carriage attached to which a flying cherrypicker would dock. Again, dedicated maintenance cherrypickers are not warranted due to the low failure rate of the devices to be serviced.

Attitude Control System Access

The satellite attitude control system is a complex of electric and chemical thrusters, propellant tanks, power processors, and thermal control system components located on the tip of beams that extend outboard of the satellite body, see Figure 13-6. To access these components, a flying cherrypicker docking platform is located amidst the complex as shown in the figure.

REPRODUCIBILITY OF THE
ORIGINAL PAGE IS POOR

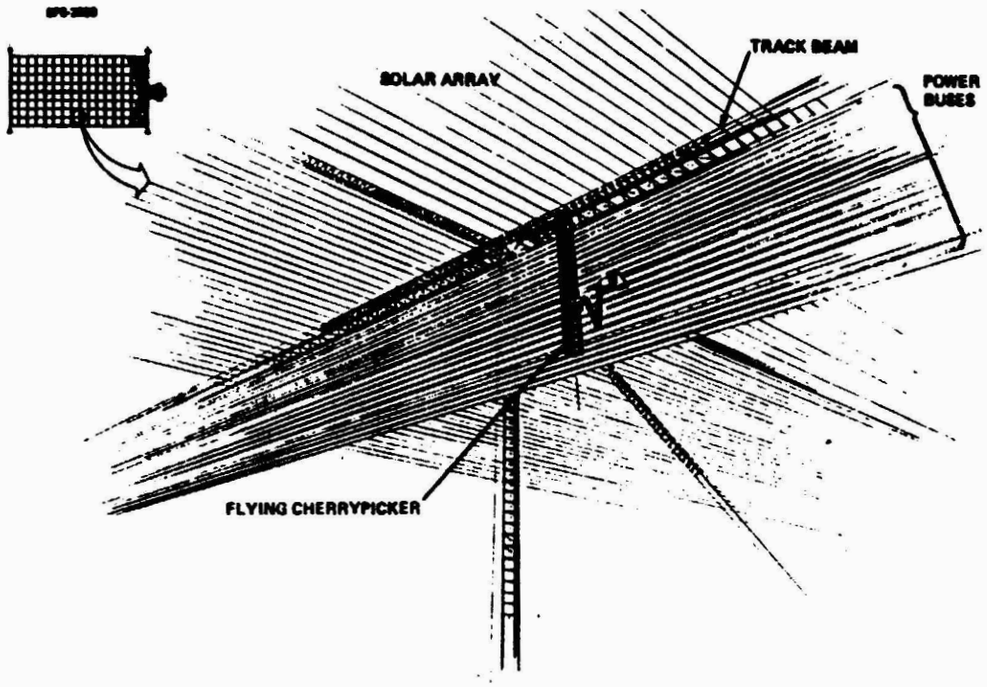

Figure 13-5. Main Bus Maintenance Access System

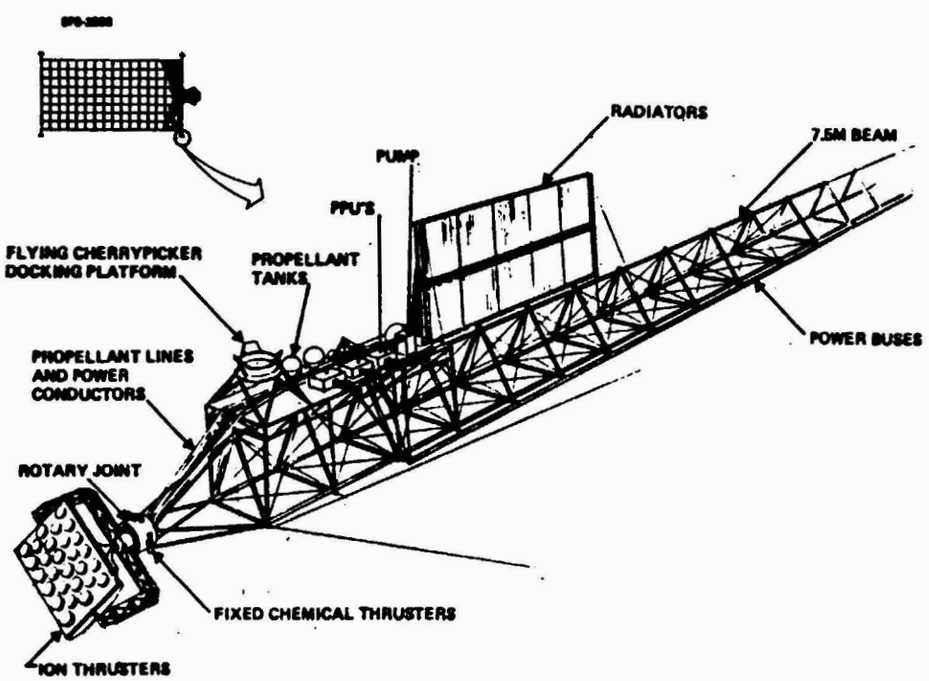

Figure 13-6. SPS Attitude Control System

Interface Structure Main Bus Access

The main power divides into two sets at the end of the power collection module midline. These two power bus sets are suspended from beams which run down to the structure surrounding the mechanical rotary joint. Access to these stacks of power busses is provided by putting tracks on the upper beams and mounting a flying cherrypicker carriage on each track, see Figure 13-7. Dedicated maintenance cherrypickers are not warranted.

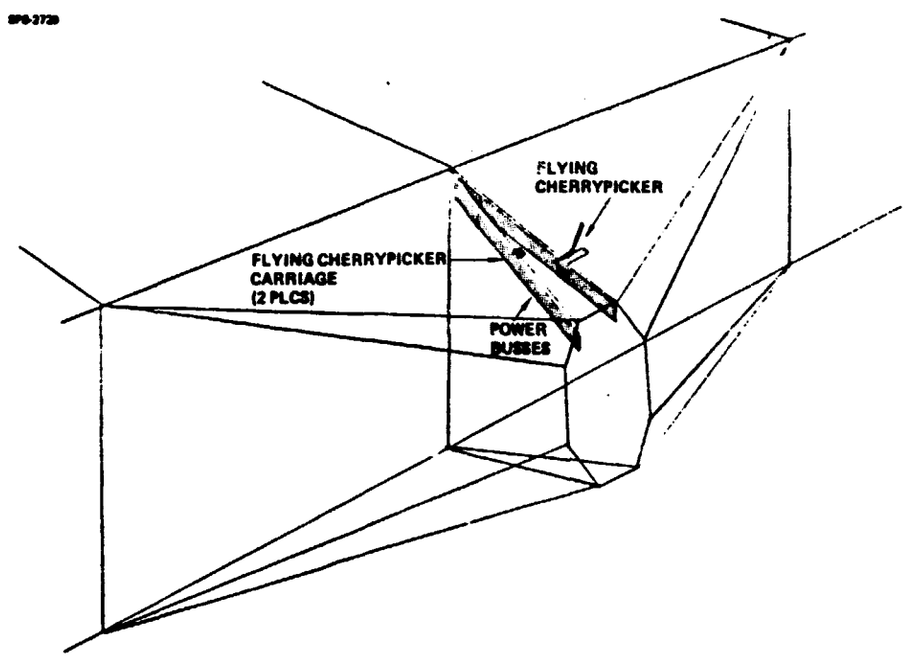

Figure 13-7. Interface Structure Maintenance Access System

Mechanical Rotary Joint and Slip Ring Assembly Access

After examining several alternative access concepts, the concept that was chosen was one that employs a built-in rotating boom and flying cherrypicker, see Figure 13-8. This configuration provides the capability for accessing all of the power busses, mechanical rotary joint components, and slipring components on both the interface structure and on the yoke. Again, a dedicated maintenance cherrypicker is not warranted due to the low failure rates of these components.

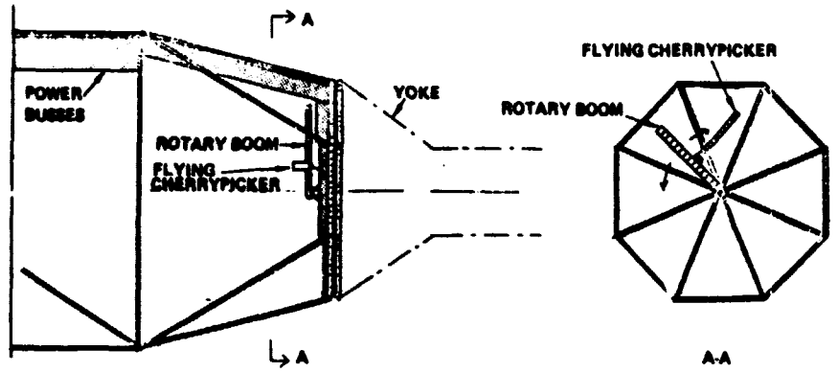

Figure 13-8. Mechanical Rotary Joint and Slip Ring Assembly Maintenance Access System

Yoke Access

The power busses and elevation joint assembly components will be accessed by a flying cherrypicker that mates with a carriage mounted on built-in tracks on the yoke, see Figure 13-9.

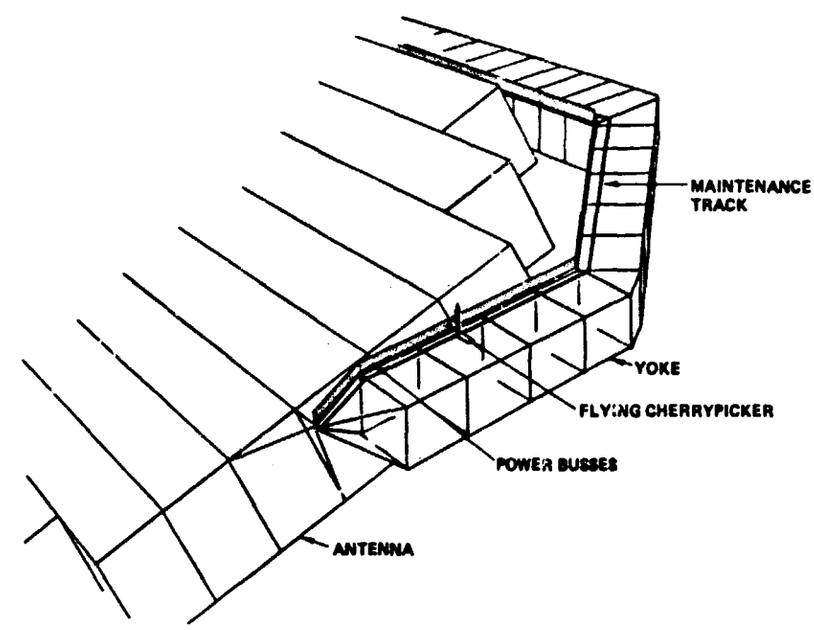

Figure 13-9. Yoke Maintenance Access System

Antenna Back Surface and Mid-Plane Access

The antenna back surface is where the main power busses will be routed to electrical substations located at various primary structure nodal points. Figure 13-10 illustrates the configuration of these substations. The maintenance access system selected for this application is illustrated in Figure 13-11. Only one of these gantry/flying cherrypicker systems is warranted by the expected failure rates of the components located on the antenna back face. This system is also employed to replace the power conductors that are routed between the substations and the secondary structure.

Antenna Front Surface Access

The access systems used for servicing the phase control and subarray systems are those defined in the earlier studies (see WBS 1.3.3 in the Part III Preferred Concept System Definition, D180-24071-1 Contract NAS9-15196). Figures 13-12 through 13-16 depict these systems.

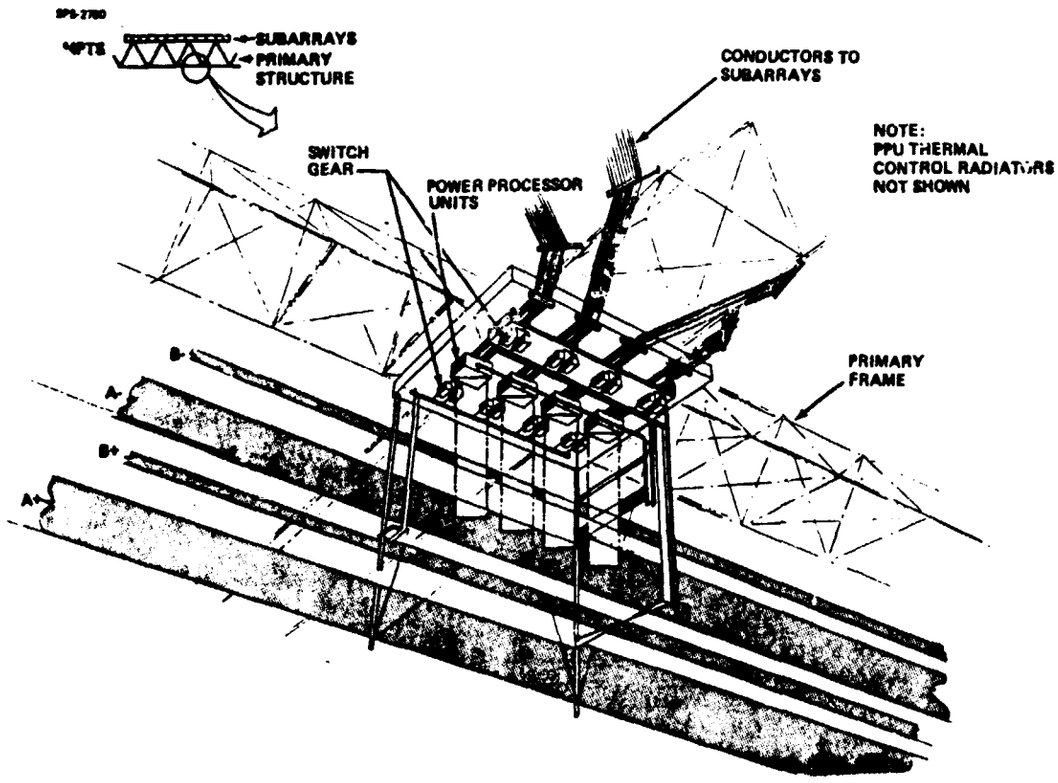

Figure 13-10. MPTS Power Processing Substation

REPRODUCIBILITY OF THE ORIGINAL PAGE IS POOR

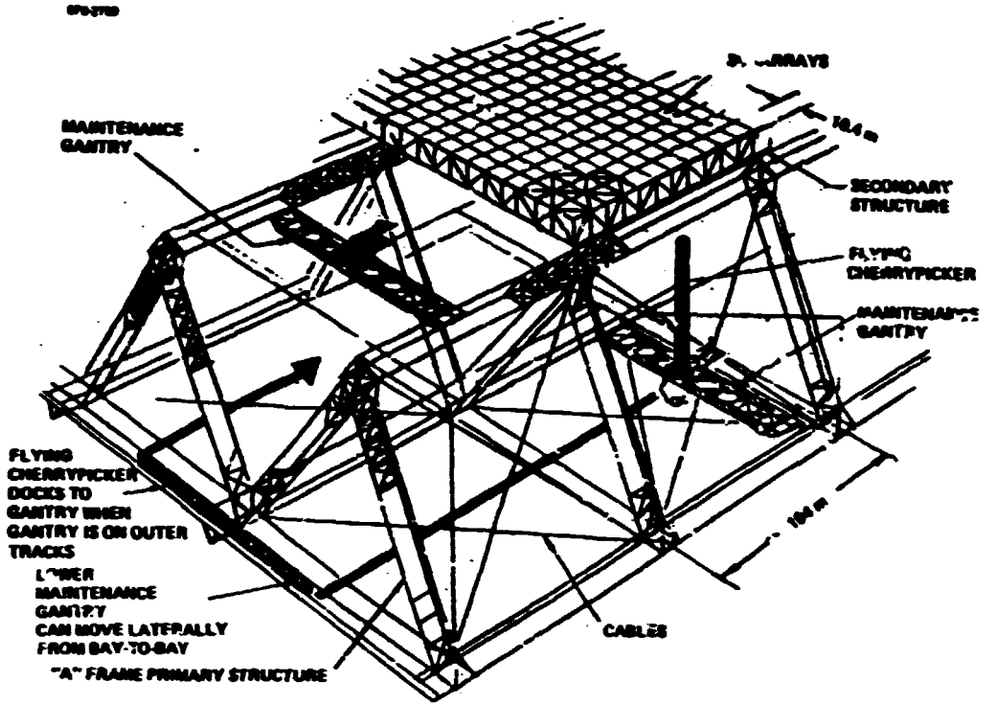

Figure 13-11. Maintenance Gantrics

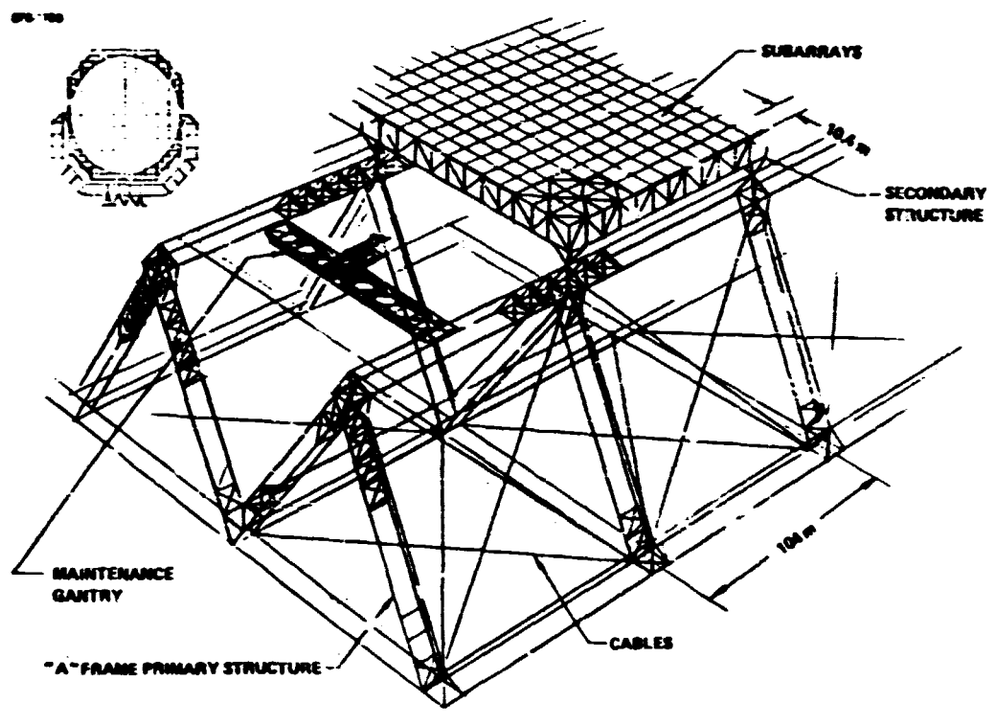

Figure 13-12. Vertical Access for Tube Maintenance

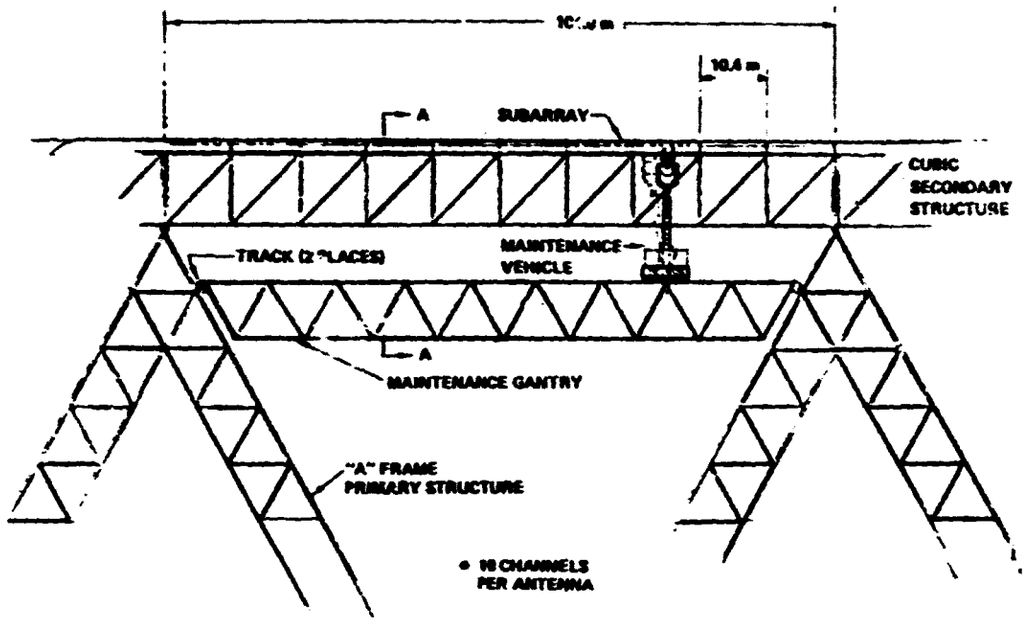

Figure 13-13. Vertical Access for Tube Maintenance

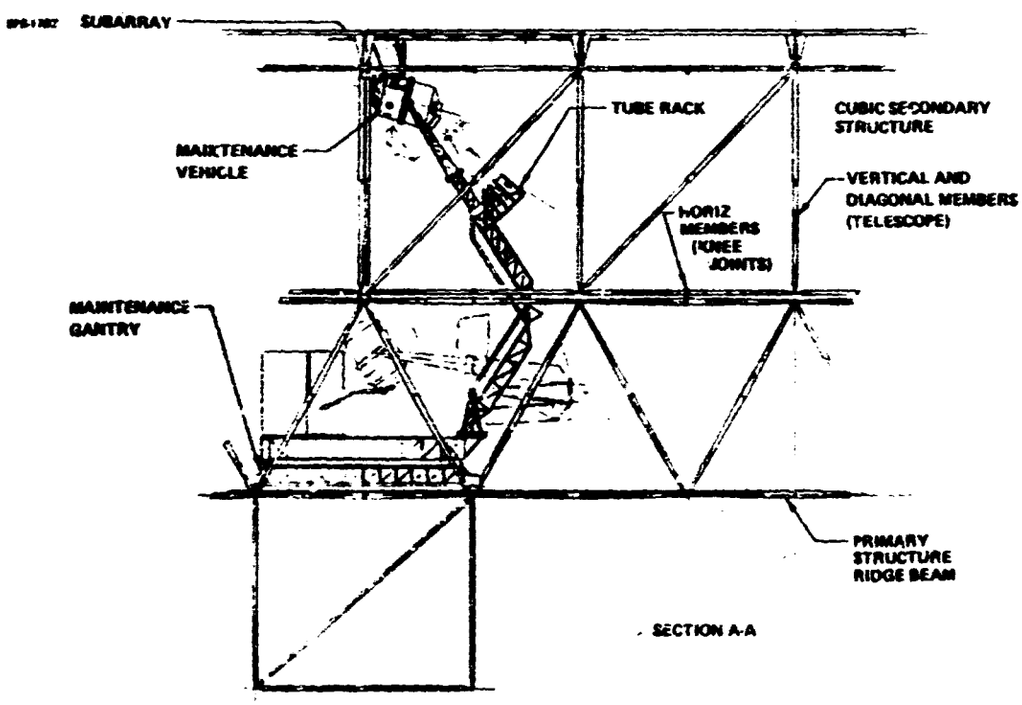

Figure 13- . ertical Access for Maintenance Vehicle

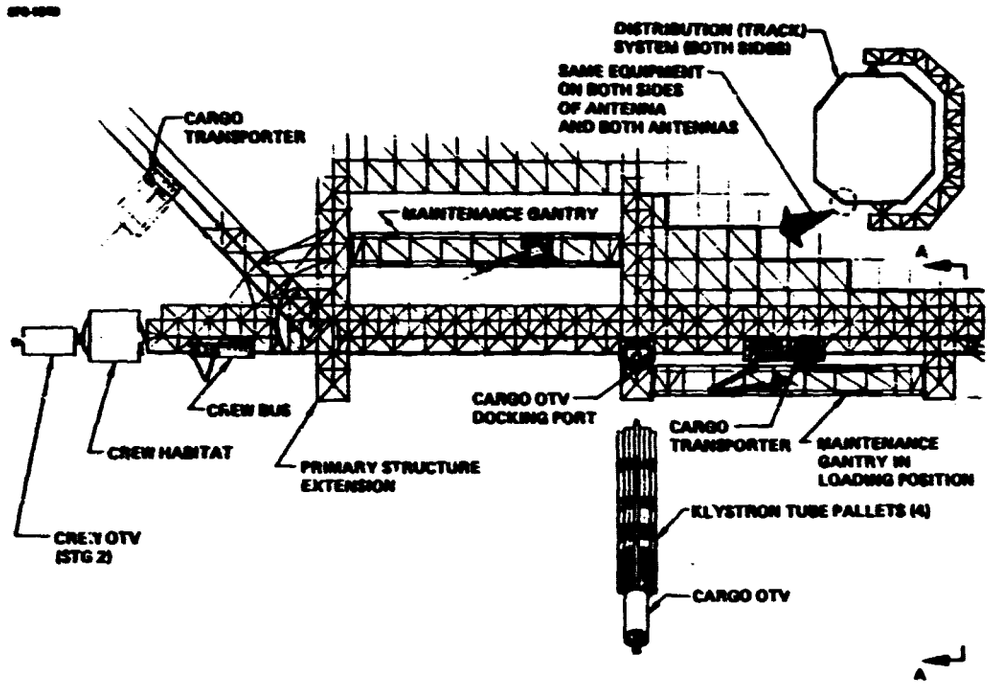

Figure 13-15. Satellite Maintenance Systems

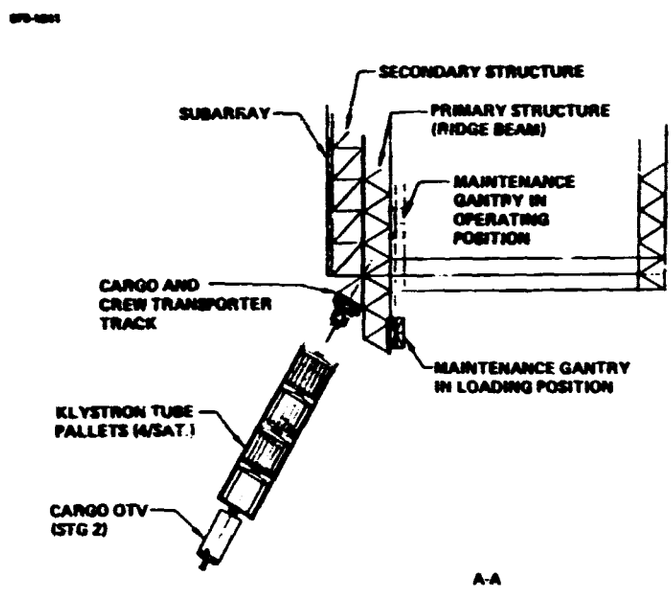

Figure 13-16. Satellite Maintenance Systems

The Flying Cherrypicker

The maintenance access concepts described above all use a machine that has been dubbed "the flying cherrypicker". Figure 13-17 illustrates the concept. The primary reason that this machine concept was created was that the predicted failure rates of the components to be serviced was much too low to warrant dedicated maintenance cherrypickers. Also, due to the complexities of the various locations in which cherrypickers would be required, it was not feasible to create an integrated track network that would allow a track-mounted cherrypicker to get to all of the locations. Hence, a flying cherrypicker and a set of track-mounted carriages were created.

The flying cherrypicker carries along a power supply which would be connected to the carriage after docking. The platform on the flying cherrypicker is used to transport the replacement components, the components that were removed from the satellite, and the maintenance tools. A docking port for a free-flyer (to be described below) is also provided on the platform. This provides a location for transporting the free-flyer on the inter-satellite flights.

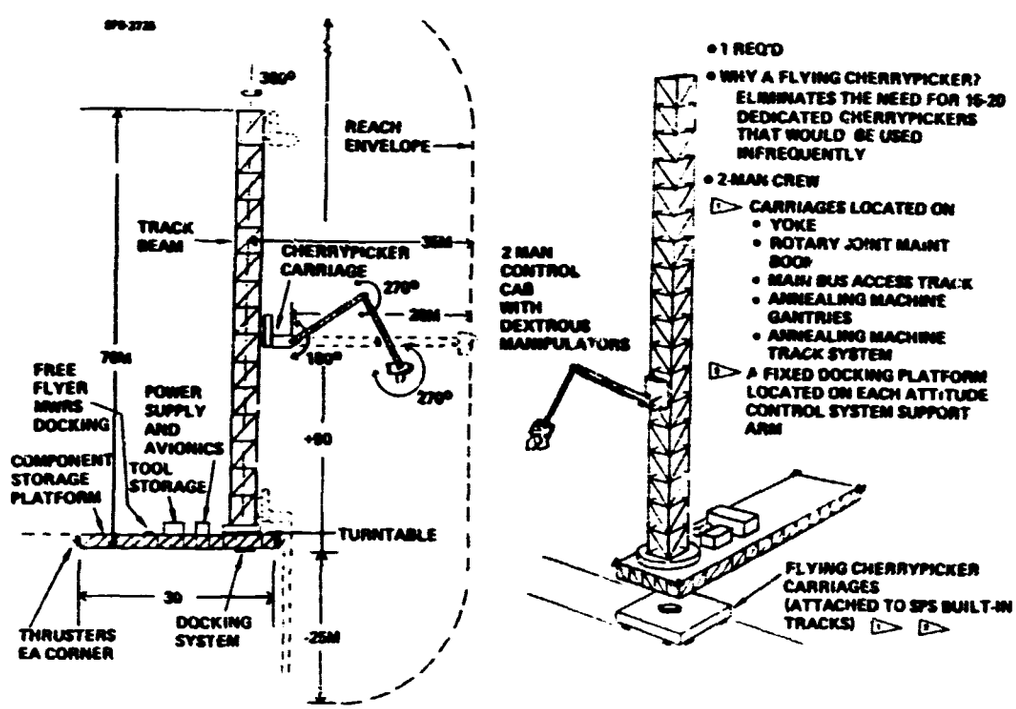

Figure 13-17. Flying Cherrypicker

The reach envelope of the flying cherrypicker was derived by consideration of the various maintenance jobs that it would be used for. Figure 13-18 illustrates the various reach envelopes that were required.

Examination of the failure rate data shows that there would be about 12 components to be serviced by the flying cherrypicker during a bi-annual maintenance visit (2 cell string blocking diodes, 2 to 3 antenna switchgear, a DC-DC converter, a disconnect switch, and a DC-DC converter thermal control system). During the 52.5 hours of available work time there would be sufficient time available for one flying cherrypicker to perform the changeout of these devices.

Free-Flyer Maintenance Vehicle

During the analysis of the maintenance operations required for the various components (see Section 3), requirements for a free-flyer maintenance vehicle were established. This vehicle would be used for the following tasks: (1) used to make a fly-over of the entire satellite to spot solar array tensioning device and catenary failures; (2) used to assist the flying cherrypicker in main power bus repairs; and (3) used to perform maintenance tasks at locations inaccessible to the flying cherrypicker, e.g., the power busses running between the solar array and the attitude control system.

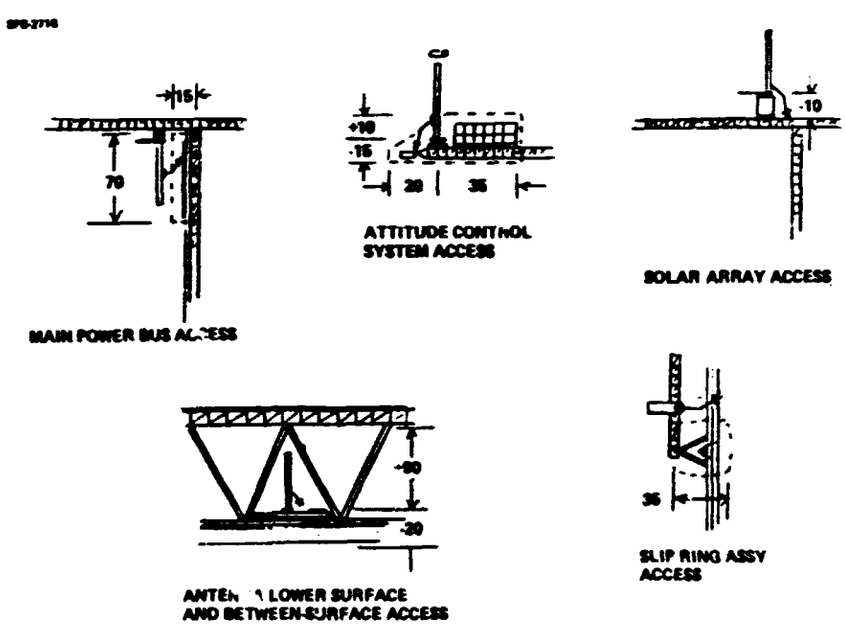

Figure 13-18. Flying Cherrypicker Reach Envelope Determinants

The free-flyer mobile remote work station defined by Grumman in Contract NAS9-15507 is a suitable candidate for this requirement, see Figure 13-19. One of these would be required.

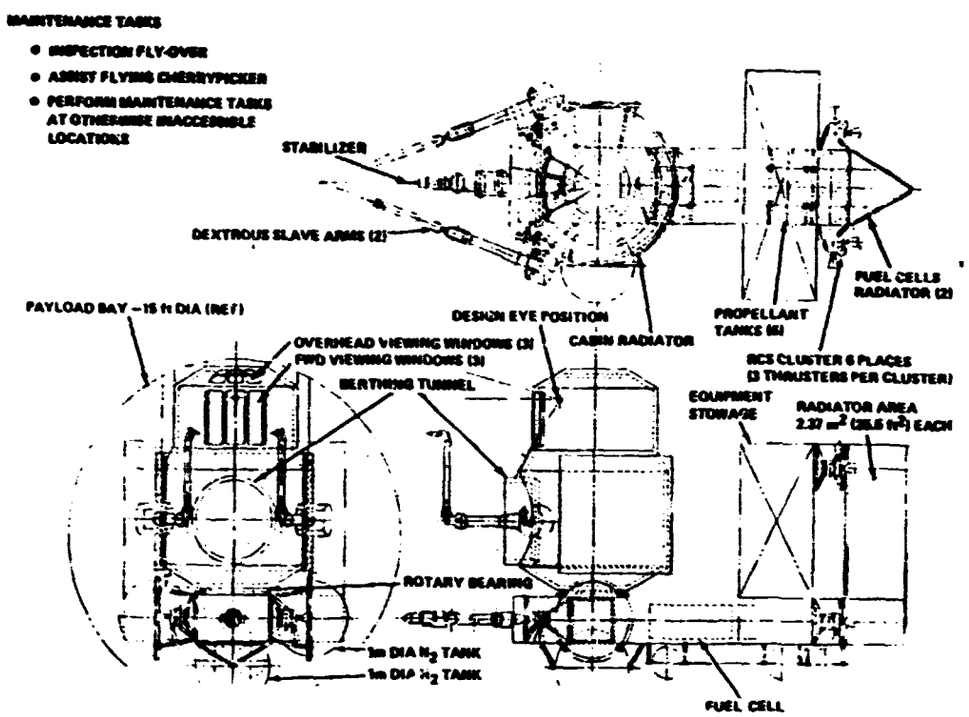

Figure 13-19. Free Flyer MRWS

3.0 MAINTENANCE CONCEPTS FOR SOME SELECTED COMPONENTS

There were 19 components selected for maintenance analysis, see Table 13-3. Failure rate data for some of these components are listed in Table 13-4. Each of the components listed in Table 13-3 (with the exception of klystron tube modules which were studied in an earlier study) were examined to a level of depth sufficient to satisfy the objectives listed in Table 13-5.

Figures 13-20 through 13-34 present the maintenance analysis data for some of the selected components (those that were listed in Table 13-3).

Table 13-3

COMPONENTS SELECTED FOR MAINTENANCE ANALYSIS

WBS	COMPONENT	Why selected [1]
1.1.1.1.4	Blanket Tensioning Devices	1
1.1.1.3.2	Blanket Mechanical Attachment	1
1.1.1.4.1	Main Power Buses	2,3
1.1.1.4.5	Cell String Blocking Diodes	1
1.1.2.2.1	DC/RF Converter Module	1,4,5
1.1.2.3.3	Switchgear	1,5
1.1.2.3.3	DC/DC Converter	1,5
1.1.2.3.4	Disconnect Switches	1
1.1.2.4.2	DC/DC Converter Thermal Control	1,3,5
1.1.2.5.1	Phase Control Receivers	1,5
1.1.2.5.2	Diplexers	1,5
1.1.2.5.3	Phase Transmitters	1,5
1.1.2.5.4	Phase Receivers	1,5
1.1.2.5.5	Conjugators	1,5
1.1.2.5.6	Cabling	1,2,5
1.1.4.2.1	Electric Propulsion Thruster	3
1.1.6.2.1.2	Mechanical Rotary Joint Drive Mechanism	2,3
1.1.6.2.2.3	Elevation Joint Drive Motor	2,3
1.1.6.2.3.1	Slip Ring	3

[1] 1 = Components with largest number of failures [2]

2 = Representative of a class of components

3 = Difficult or unique access problem

4 = Klystron maintenance has been detailed previously (not proposed to be updated). Refurbishment requirements to be studied.

5 = Failure results in significant power loss [2]

[2] Reference: Section 1.1.0.6 in Vol. II, Phase 1 Final Report, Phase 1 Systems Analysis and Tradeoffs, D180-25037-2 Contract NAS9-15636, March 1, 1979.

Table 13-4. SPS Failure Summary—5 GW SPS

WBS	NOMENCLATURE	QTY/ SPS	FAILURES PER YEAR ▷	NO. OF FAILURES 6 MO.	NO. OF FAILURES 6 MO./20 SPS	NO. PER MONTH TO BE RECEIVED
1.1.1.1.4	BLANKET TENSIONING DEVICES	100,000	162.5	81.25 ▷	1625 ▷	▷
1.1.1.3.2	BLANKET MECHANICAL ATTACHMENT	100,000	329 ▷	164.5 ▷	3290 ▷	▷
1.1.1.4.5	CELL STRING BLOCKING DIODES	9,538	3.5	1.75	35	5.8
1.1.2.2.1	DC/RF CONVERTER MODULE (KTM)	101,562	3957	1983.5	39670	6612
1.1.2.3.2	SWITCHGEAR	456	4.5	2.25	45	7.5
1.1.2.3.3	DC/DC CONVERTER (POWER PROCESSORS)	228	12	6	120	20
1.1.2.3.4	DISCONNECT SWITCHES	456	1.5	.75	16	2.7
1.1.2.4.2	DC/DC CONVERTER THERMAL CONTROL	228	2	1	20	3.3
1.1.2.5.1	RECEIVERS	101,784	2	1	20	3.3
1.1.2.5.2	DIPLEXERS ▷	101,784	1	.5	10	1.7
1.1.2.5.3	PHASE TRANSMITTERS	110,204	14.5	7.25	145	24.2
1.1.2.5.4	PHASE RECEIVERS	110,204	2	1	20	3.3
1.1.2.5.5	CONJUGATORS	101,784	16.5	8.25	165	21.5
1.1.2.5.6	CABLING	109,444	12.5	6.25	125	20.8

▷ FAILURES COULD BE TOLERATED—NO MAINTENANCE PLANNED (SEE SECTION 3)

▷ REDESIGN PART TO ELIMINATE FAILURES (SEE SECTION 3)

▷ BASED ON DATA FROM THE REFERENCE CITED IN FOOTNOTE ▷ IN TABLE 12

▷ A COMPONENT THAT WOULD BE AN INTEGRAL PART OF THE KLYSTRON TUBE MODULE WBS 1.1.2.2

Table 13-5. Component Maintenance Analysis Objectives

SPS-2721

FOR EACH OF THE SELECTED COMPONENTS

- CREATE A PRELIMINARY CONFIGURATION DWG SHOWING
  - EXTERNAL SHAPE, SIZE, INTERFACES, INSTALLED CONFIGURATION
  - INTERNAL CONFIGURATION
- DEFINE FAILURE MODES AND EFFECTS
- DEFINE FAULT IDENTIFICATION/ISOLATION CONCEPT
- DEFINE LOWEST REPLACEABLE UNIT
- DEFINE A MAINTENANCE PROCEDURE
- DEFINE THE MAINTENANCE SUPPORT EQUIPMENT REQ'D
- DEFINE THE REFURBISHMENT REQM'TS
- DEFINE THE RATIONALE FOR DESIGN IMPROVEMENTS/REFINEMENTS THAT WOULD FACILITATE MAINTENANCE

SPS-2720

FAILURE RATE: 162.5 PER YEAR, 81.25 PER 6 MONTHS

FAILURE MODES	FAILURE EFFECT	HOW DETECTED
• BROKEN SPRING	• SLIGHT LENGTH CHANGE ▷	• VISUAL INSPECTION, SECONDARY EFFECT ▷
• BROKEN LINK	• LOAD TAKEN BY ADJACENT SPRINGS ▷	SAME
• BROKEN ATTACHMENT RING	• LOAD TAKEN BY ADJACENT SPRINGS ▷	SAME

MAINTENANCE PROCEDURE

STEP	OPERATION	TOOLS
1	• ELECTRICALLY ISOLATE THE POWER SECTOR	• SHORTING CABLE ASS'Y
2	• DETACH LINK A	
3	• DETACH LINK B	
4	• STORE DEFECTIVE COMPONENT/RETRIEVE REPLACEMENT PART	
5	• ATTACH LINK A	
6	• ATTACH LINK B	
7	• DETACH SHORTING CABLE	

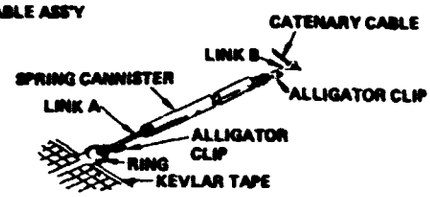

REMARKS

▷ IF ONLY ONE SPRING WERE TO FAIL, THERE WOULD BE NO SIGNIFICANT IMPACT ON THE MECHANICAL INTEGRITY OF THE BLANKET SUSPENSION SYSTEM. IN FACT, SEVERAL SPRINGS COULD FAIL ON AN END WITH MINIMAL IMPACT.

▷ IF ENOUGH SPRINGS FAILED AT ONE END, THE BLANKET MAY DEFORM ENOUGH TO CAUSE THE BLANKET TO CRINKLE, CAUSING AN ELECTRICAL BREAK WHICH WOULD RESULT IN THE AFFECTED STRING TO BE AUTOMATICALLY DISCONNECTED. IF THE BLANKET FAILED, THE ENTIRE BLANKET WOULD HAVE TO BE REPLACED.

RECOMMENDATIONS

- REPLACE DEFECTIVE SPRINGS ONLY IF MAINTENANCE EQUIPMENT IS IN THE AREA FOR OTHER PURPOSES
- HAVE FREE FLYER DETECT AND RECORD FAILURES

Figure 13-20. WBS 1.1.1.1.4 — Blanket Tensioning Device Maintenance Analysis Data

SPS-2740

FAILURE RATE: 329 PER YEAR, 164.5 PER 6 MONTHS ▷

FAILURE MODES	FAILURE EFFECT	HOW DETECTED
• CABLE BREAK	(SEE SKETCH A)	• VISUAL INSPECTION, SECONDARY AFFECT ▷
• ATTACHMENT BREAK	(SEE SKETCH A)	• SAME

MAINTENANCE PROCEDURE

STEP	OPERATION	TOOLS
1	• ELECTRICALLY ISOLATE THE POWER SECTOR	• SHORTING CABLE
2	• RETRIEVE REPAIR LINK FROM STORAGE	
3	• INSTALL ONE END OF REPAIR LINK	
4	• PULL CATENARY INTO POSITION	
5	• INSTALL SECOND END OF REPAIR LINK	
6	• DETACH SHORTING CABLE	

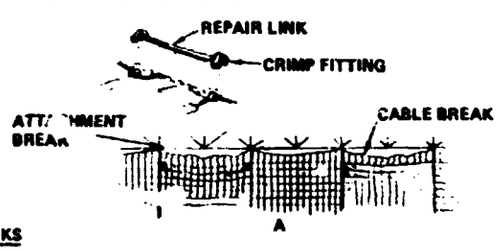

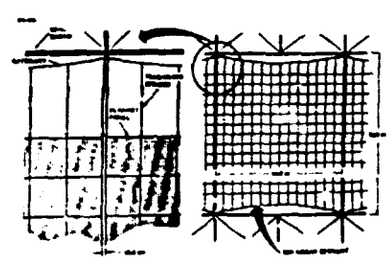

REMARKS

▷ THE FREE FLYER WOULD DETECT THESE FAULTS BY VISUAL INSPECTION. IF THE FAILURE WERE CATESTROPHIC ENOUGH, THE BLANKET WOULD BE ELECTRICALLY DISABLED WHICH WOULD CAUSE AN AUTOMATIC SHUTDOWN

▷ THERE ARE TOO MANY CHANCES OF FAILURE AND THE RESULTANT FAILURES COULD CAUSE SUBSTANTIAL BLANKET DAMAGE. A SLIGHT INCREASE IN CATENARY CABLE DIAMETER WOULD ESSENTIALLY ELIMINATE THE CHANCE OF FAILURE AT MINIMAL MASS/COST IMPACT

RECOMMENDATION

OVER DESIGN THE CATENARY CABLE TO ELIMINATE THIS FAILURE.

REPRODUCIBILITY OF THE ORIGINAL PAGE IS POOR

Figure 13-21. WBS 1.1.1.3.2—Blanket Mechanical Attachment Maintenance Analysis Data

FAILURE RATE: 3.5 PER YEAR, 1.75 PER 6 MONTHS

FAILURE MODES	FAILURE EFFECT	HOW DETECTED
DIODE OPEN CIRCUIT	NO CURRENT FROM STRING	FAULT ANNUNCIATOR AT STRING CUR 'ENT MONITOR
DIODE SHORT CIRCUIT	SAME	SAME

MAINTENANCE PROCEDURE

STEP	OPERATION	TOOLS
1	ATTACH SHORTING CABLE TO FAR END OF STRING	SHORTING CABLE
2	DEPLOY SHORTING CABLE TO NEAR THE DEFECTIVE BLOCKING DIODE	
3	IF THE DIODE IS OPEN CIRCUITED ATTACH SHORTING CABLE TO PIGTAIL	
4	DISCONNECT PIGTAIL	
5	IF THE DIODE IS SHORT CIRCUITED, ATTACH SHORTING CABLE TO PIGTAIL	
6	DISCONNECT DIODE CANNISTER FROM POST	
7	INSTALL REPLACEMENT DIODE CANNISTER	
8	ATTACH PIGTAIL CONNECTOR	
9	DETACH SHORTING CABLE	

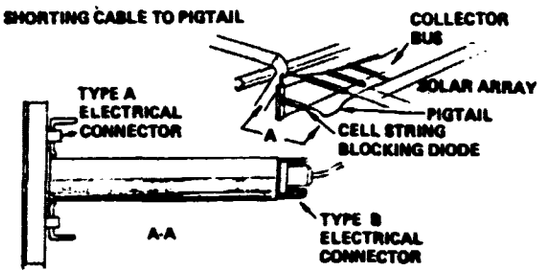

REMARKS

THE DEXTROUS MANIPULATORS WILL BE OPERATING AROUND A "HOT" BLANKET. INSULATED END EFFECTORS IS THE LEAST AMOUNT OF PROTECTION THAT SHOULD BE PROVIDED.

Figure 13-22. WBS 1.1.1.4.5—Cell String Blocking Diodes Maintenance Analysis Data

SPS-2742

FAILURE RATE: 3967 PER YEAR, 1984 PER 6 MONTHS

FAILURE MODES	FAILURE EFFECT	HOW DETECTED
• CATHODE FAILURE	• AUTO DISCONNECT	• FAULT DETECTION AVIONICS
• HEATER FAILURE	• AUTO DISCONNECT	• FAULT DETECTION AVIONICS
• THERMAL CONTROL FAILURE	• AUTO DISCONNECT	• FAULT DETECTION AVIONICS
• PHASE CONTROL FAILURE	• AUTO DISCONNECT	• FAULT DETECTION AVIONICS

MAINTENANCE PROCEDURE

STEP	OPERATION	TOOLS

SEE WBS 1.33 IN THE PART III PREFERRED CONCEPT DESCRIPTION, D180-24071-1, MARCH, 1978

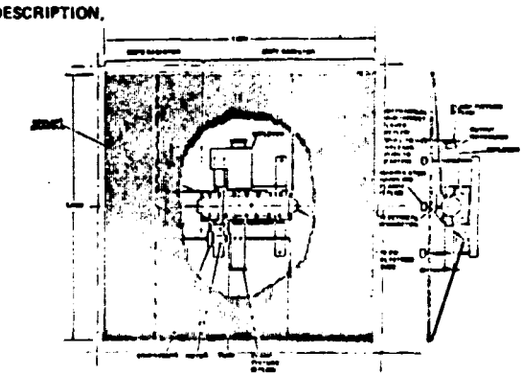

REMARKS

Figure 13-23. WBS 1.1.2.2.1—DC/RF Converter Module Maintenance Analysis Data

SPS-2741

FAILURE RATE: 4.5 PER YEAR, 2.25 PER 6 MONTHS

FAILURE MODES	FAILURE EFFECT	HOW DETECTED
• FAIL TO OPERATE	• LOSS OF POWER SECTOR	• FAULT ANNUNCIATION

MAINTENANCE PROCEDURE

STEP	OPERATION	TOOLS
1	• REMOTELY OPERATE DISCONNECT SWITCHES ON EACH SIDE OF SWITCH GEAR	
2	• DISCONNECT CONTROL LEAD	
3	• DISCONNECT SWITCH GEAR-TO-DISCONNECT SWITCH ELECTRICAL COUPLING (2 PLCS)	• SCREW FITTING TOOL
4	• DISCONNECT 4 MECHANICAL FASTENERS	
5	• STOW DEFECTIVE UNIT/RETRIEVE REPLACEMENT PART	
6 THRU 8	• REVERSE STEPS 2, 3, AND 4	
9	• REMOTELY OPERATE DISCONNECT SWITCHES	

REMARKS

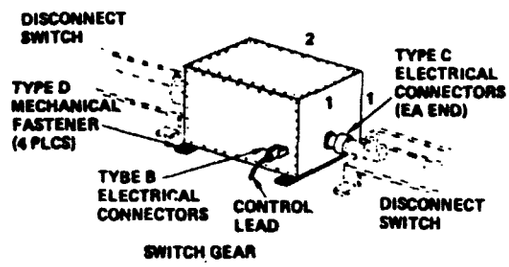

Figure 13-24. WBS 1.1.2.3.2–Switch Gear Maintenance Analysis Data

SPS-2746

FAILURE RATE: 12 PER YEAR, 6 PER 6 MONTHS

FAILURE MODES	FAILURE EFFECT	HOW DETECTED
• FAILED TO REGULATE	• LOSS OF POWER SECTOR	• FAULT ANNUNCIATOR
• NO OUTPUT	• LOSS OF POWER SECTOR	• FAULT ANNUNCIATOR

MAINTENANCE PROCEDURE

STEP	OPERATION	TOOLS
(THE PPU HAS BEEN ELECTRICALLY ISOLATED PRIOR TO ARRIVAL OF THE MAINT CREW)		
1	• FLUID COUPLING DISCONNECT SUBROUTINE	• FLUID PURGE/REFILL SYSTEM
2	• DISCONNECT CONTROL CABLE	• SCREW FITTING TOOL
3	• DISCONNECT BUS BARS	• SCREW FITTING TOOL
4	• DISCONNECT OUTPUT CONDUCTORS	
5	• DISCONNECT MECHANICAL FASTENERS	
6	• STOW DEFECTIVE UNIT/RETRIEVE REPLACEMENT UNIT	
7 THRU 11	• REVERSE STEPS 4 THRU 1	

REMARKS

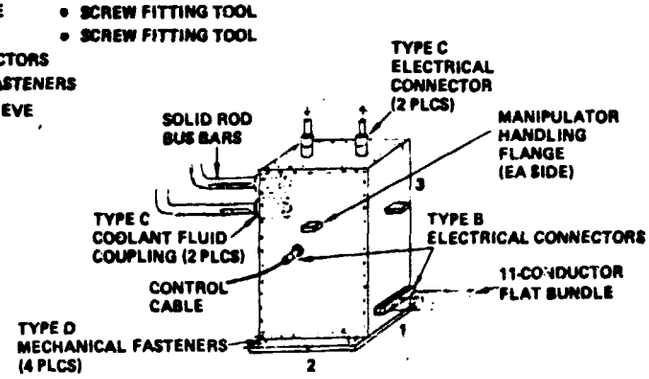

(ALSO REFERRED TO AS A POWER PROCESSOR UNIT (PPU)

Figure 13-25. WBS 1.1.2.3.3–DC/DC Converter Maintenance Analysis Data

FAILURE RATE: 1.5 PER YEAR, 0.75 PER 6 MONTHS

FAILURE MODES	FAILURE EFFECT	HOW DETECTED
• INTERMITTENT CONTACT	• LOSS OF POWER SECTOR	• FAULT ANNUNCIATION
• OPEN CONTACT	• LOSS OF POWER SECTOR	• FAULT ANNUNCIATION

MAINTENANCE PROCEDURE

STEP	OPERATION	TOOLS
1	• DISCONNECT CONTROL LEAD	
2	• DISCONNECT THE BUS BAR CONNECTORS (2 PLCS)	• SCREW FITTING TOOL
3	• DISCONNECT THE MECHANICAL FASTENERS (4 PLCS)	
4	• STOW DEFECTIVE UNIT/RETRIEVE REPLACEMENT UNIT	
5 THRU 7	REVERSE STEPS 3, 2, and 1	

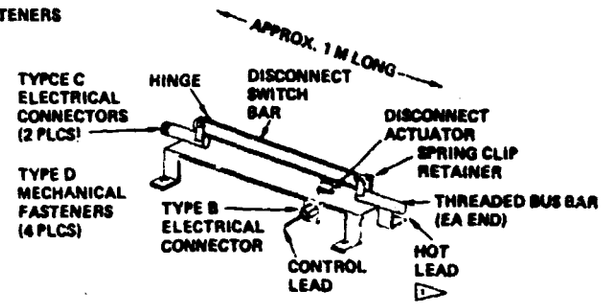

REMARKS

▷ THIS DEVICE IS ALSO USED ON THE SOLAR-COLLECTOR. IN THIS CASE, IF IT IS NECESSARY TO REPLACE A DISCONNECT SWITCH, THERE WOULD BE A "HOT" LEAD THAT WOULD HAVE TO BE DISCONNECTED, ON THE ANTENNA, HOWEVER, THERE WOULD BE NO HOT LEAD

Figure 13-26. WBS 1.1.2.3.4—Disconnect Switch Maintenance Analysis Data

SPS-2746

FAILURE RATE: NIL

FAILURE MODES	FAILURE EFFECT	HOW DETECTED
• TORN BY FOREIGN OBJECT (SEE SKETCH A)	• POWER SHUTDOWN	• AUTO DETECTION

MAINTENANCE PROCEDURE

STEP	OPERATION	TOOLS
REMOVAL OF DEFECTIVE BUS		
1	• CUT DEFECTIVE BUS OFF AT ONE OF THE SPACERS	• POWER SHEARS
2	• FREE FLYER GRABS FREE END	
3	• CUT OFF OTHER END OF DEFECTIVE BUS AT OTHER SPACER	
4	• TRANSPORT DEFECTIVE BUS TO DISPOSAL SITE	
INSTALLATION OF NEW BUS		
1	• PARTIALLY DEPLOY BUS	• BUS DEPLOYER
2	• WELD TO STUB A	• BUS WELDER
3	• DEPLOY BUS	
4	• CUT OFF BUS	• POWER SHEARS
5	• WELD BUS TO STUB B	

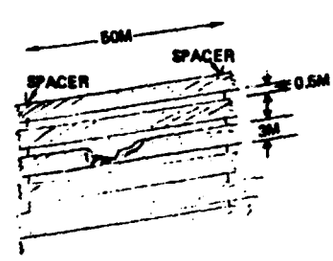

REMARKS

- EVEN THROUGH THIS IS AN UNLIKELY FAILURE, A SYSTEM NEEDS TO BE CREATED FOR DEALING WITH THIS PROBLEM
- THE POWER SHEARS, BUS DEPLOYER, AND BUS WELDER WOULD BE OPERATED VIA DEXTROUS MANIPULATORS
- DISPOSAL OF SCRAP BUS IS UNDEFINED

Figure 13-27. WBS 1.1.4.1—Main Power Bus Maintenance Analysis Data

FAILURE RATE: 2 PER YEAR, 1 PER 6 MONTHS

FAILURE MODES	FAILURE EFFECT	HOW DETECTED
PUMP FAIL	POWER SECTOR OFF	FAULT ANNUNCIATION
EXPANSION VALVE FAIL	POWER SECTOR OFF	FAULT ANNUNCIATION
CONTROLLER FAIL	POWER SECTOR OFF	FAULT ANNUNCIATION

MAINTENANCE PROCEDURE

STEP	OPERATION	TOOLS
PUMP AND EXPANSION VALVE		
1	DISCONNECT SENSOR AND CONTROL LEADS	
2	DISCONNECT POWER LEAD (PUMP ONLY)	
3	CLOSE ISOLATION VALVES	
4	PURGE FLUID	FLUID LINE PURGE/REFILL SYSTEM
5	DISCONNECT FLUID COUPLINGS	SCREW CONNECTOR TOOL
6	DISCONNECT MECHANICAL FASTENERS	
7	STOW DEFECTIVE COMPONENT/RETRIEVE REPLACEMENT PART	
8 THRU 13	REVERSE STEPS 6 THRU 1	

CONTROLLER	
1	DISCONNECT ELECTRICAL CONNECTORS
2	DISCONNECT MECHANICAL FASTENERS
3	STOW DEFECTIVE COMPONENT/RETRIEVE REPLACEMENT PART
4 - 5	REVERSE STEPS 2 AND 1

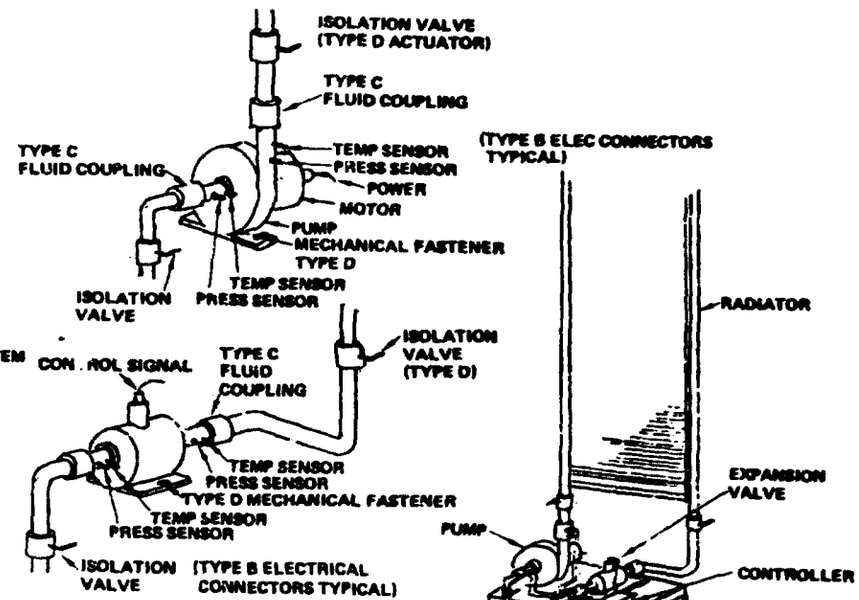

ISOLATION VALVE INTERFACES

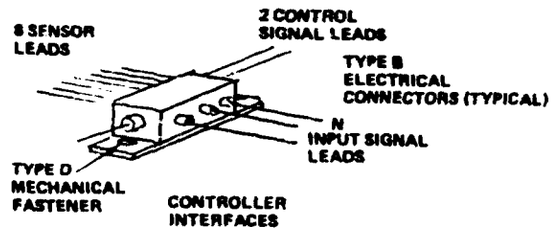

CONTROLLER INTERFACES

Figure 13-28. WBS 1.1.2.4.2–DC/DC Converter Thermal Control Maintenance Analysis Data

SPS-2746

FAILURE RATE: 2 PER YEAR

FAILURE MODES	FAILURE EFFECT	HOW DETECTED
	• KLYSTRON SHUTDOWN	• INPUT POWER VOLTAGE ANNUNCIATION
	• KLYSTRON SHUTDOWN	• CONNECT LOCK ANNUNCIATION
	• KLYSTRON SHUTDOWN	• IF OUTPUT ANNUNCIATION

MAINTENANCE PROCEDURE

STEP	OPERATION	TOOLS
• DISCONNECT 4 ELECTRICAL CONNECTORS		
• DISCONNECT 4 MECHANICAL FASTENERS		
• INSTALL REPLACEMENT PART		

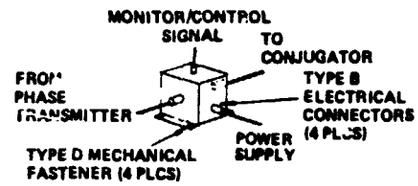

REMARKS

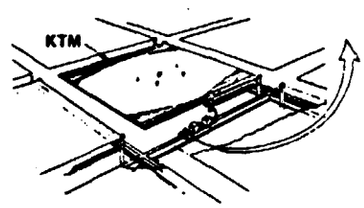

Figure 13-29. WBS 1.1.2.5.1—Phase Receivers Maintenance Analysis Data

SPS-2746

FAILURE RATE: 1 PER YEAR

FAILURE MODES	FAILURE EFFECT	HOW DETECTED
		• KLYSTRON VOLTAGE AND CURRENT READOUT
		• MONITOR COMPLETE OUTPUT READOUT

MAINTENANCE PROCEDURE

STEP	OPERATION	TOOLS

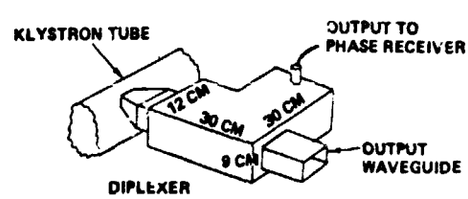

REMARKS

• THIS COMPONENT REPLACEMENT WILL REQUIRE THE KTM TO BE REMOVED—SEE 1.1.2.2.1

Figure 13-30. WBS 1.1.2.5.2—Diplexers Maintenance Analysis Data

SPS-2728

FAILURE RATE: 14.5 PER YEAR

FAILURE MODES	FAILURE EFFECT	HOW DETECTED
		• INPUT POWER VOLTAGE READOUT • IF INPUT READOUT • LOOP LOCK READOUT

MAINTENANCE PROCEDURE

STEP	OPERATION	TOOLS
	• DISCONNECT 4 ELECTRICAL CONNECTORS • DISCONNECT 4 MECHANICAL CONNECTORS • INSTALL REPLACEMENT PART	

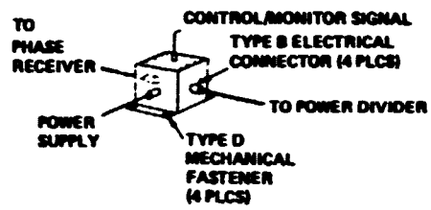

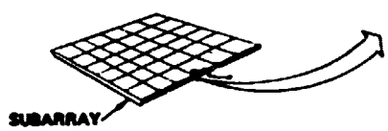

REMARKS

Figure 13-31. WBS 1.1.2.5.3—Phase Transmitters Maintenance Analysis Data

SPS-2728

FAILURE RATE: 2 PER YEAR

FAILURE MODES	FAILURE EFFECT	HOW DETECTED
		• POWER VOLTAGE INPUT READOUT • IF OUTPUT READOUT

MAINTENANCE PROCEDURE

STEP	OPERATION	TOOLS
	• DISCONNECT 4 ELECTRICAL CONNECTORS • DISCONNECT 4 MECHANICAL CONNECTORS • INSTALL REPLACEMENT PART	

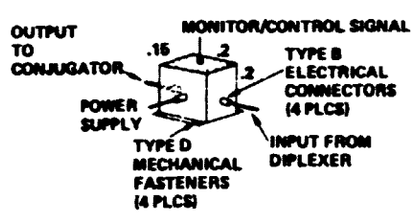

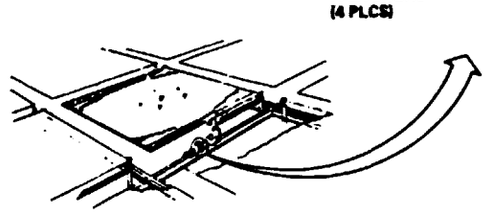

REMARKS

Figure 13-32. WBS 1.1.2.5.4—Phase Control Receivers Maintenance Analysis Data

C-16

SPS-2731

FAILURE RATE: 16.5 PER YEAR

FAILURE MODES	FAILURE EFFECT	HOW DETECTED
		• POWER VOLTAGE INPUT READOUT • REF PHASE INPUT READOUT • OUTPUT FROM RECEIVER READOUT • OUTPUT TO DRIVER READOUT

MAINTENANCE PROCEDURE

STEP	OPERATION	TOOLS
	• DISCONNECT 5 ELECTRICAL CONNECTORS • DISCONNECT 4 MECHANICAL CONNECTORS • INSTALL REPLACEMENT PART	

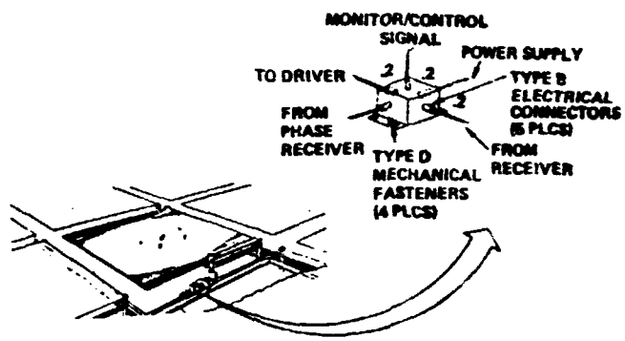

REMARKS

Figure 13-33. WBS 1.1.2.5.5—Conjugators Maintenance Analysis Data

SPS-2738

FAILURE RATE: 12.5 PER YEAR

FAILURE MODES	FAILURE EFFECT	HOW DETECTED
		• FAULT ISOLATION BASED ON DEDUCTION OF SYMPTOMS

MAINTENANCE PROCEDURE

STEP	OPERATION	TOOLS
	• DISCONNECT ELECTRICAL CONNECTOR • REMOVE CABLE FROM CABLE CLAMPS • DISCONNECT ELECTRICAL CONNECTOR • REPLACE WITH NEW CABLE	

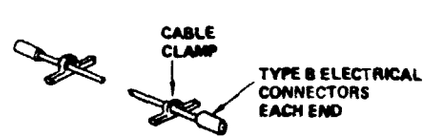

REMARKS

Figure 13-34. WBS 1.1.2.5.6—Cabling Maintenance Analysis Data

4.0 GEO BASE MAINTENANCE SUPPORT SYSTEMS AND OPERATIONS

The objectives of this maintenance analysis subtask were the following: (1) define the klystron tube module refurbishment systems and operations; (2) define the systems and operations required to refurbish the other components; and (3) to create an integrated GEO base maintenance support systems and operations concept.

The general guidelines for this analysis are given in Table 13-6. The number of components per month to be processed in the refurbishment operations were given in Table 13-4. Examination of the number of units per months to be refurbished shows that the klystron tube modules are by far the most prevalent component to be processed.

TABLE 13-6
GENERAL GUIDELINES FOR THE GEO BASE MAINTENANCE SUPPORT SYSTEMS AND OPERATIONS ANALYAIS

- Refurbishment crew stationed at GEO base for 90 day staytimes
- SPS maintenance crews return to GEO base after 90 days on Earth to repeat the 90 day maintenance visit cycle
- Replacement components delivered to GEO on the EOTV
- Defective components delivered to GEO base by OTV's
- The traveling maintenance crew and their equipment and vehicles must have docking provisions at the GEO base
- Crew duty cycle same as construction and base ops crew
    - 6 days on/1 day off
    - 10 hour work shift
    - 2 shifts per day
    - .75 productivity factor
- Refurbishment operations conducted within pressurized work modules (no EVA)

- All refurbished components to be operationally tested prior to return to service
- 20 SPS's receive 2 maintenance visits each per year

Klystron Tube Module refurbishment Systems and Operations

To refresh our memory, a klystron tube module is shown in Figure 13-35. A klystron tube is shown in Figure 13-36. Table 13-7 lists the anticipated failure modes. The general flow of events for the refurbishment operations are given in Figure 13-37.

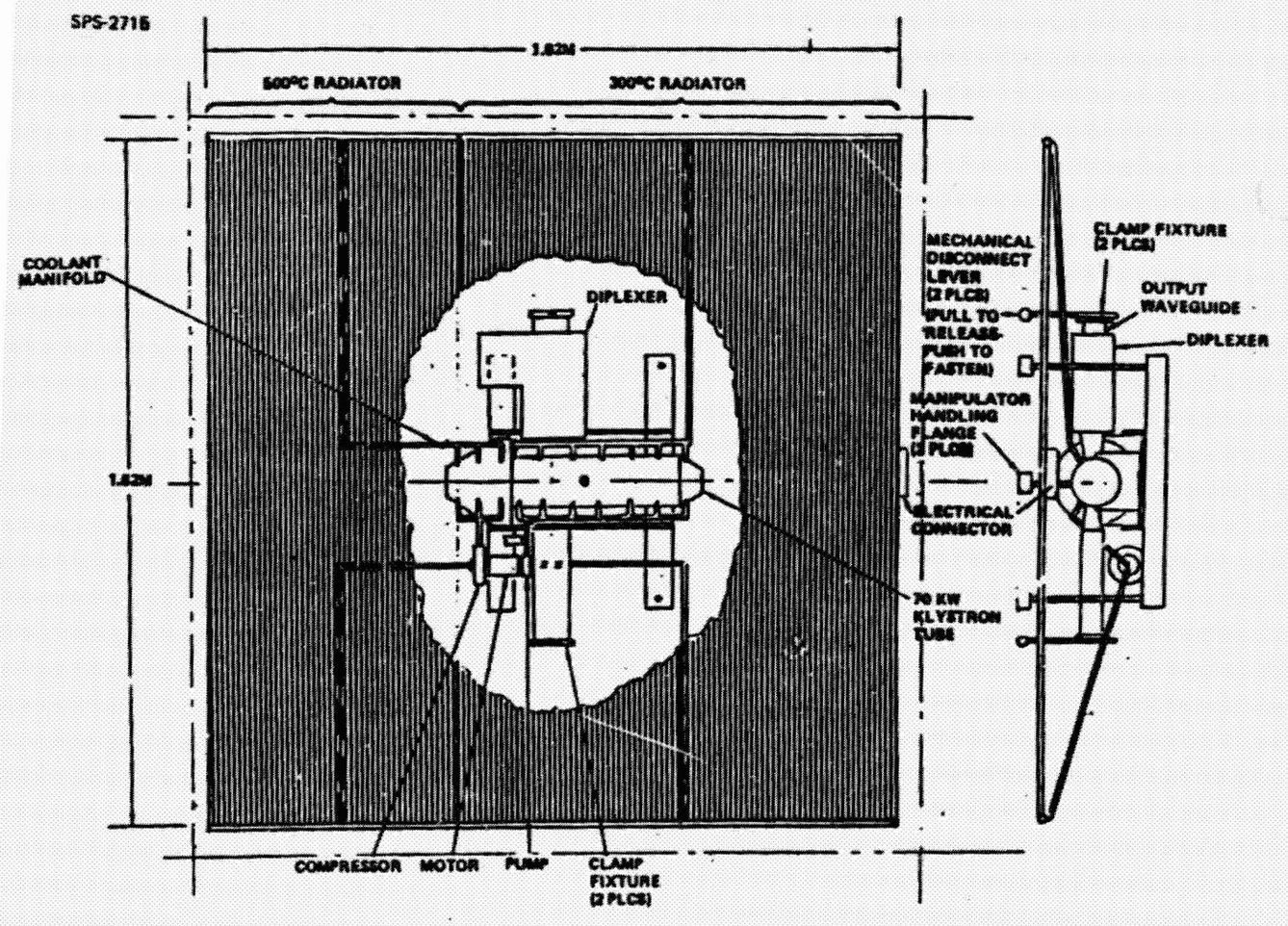

Figure 13-35. Klystron Tube Module (KTM)

REPRODUCIBILITY OF THE ORIGINAL PAGE IS POOR

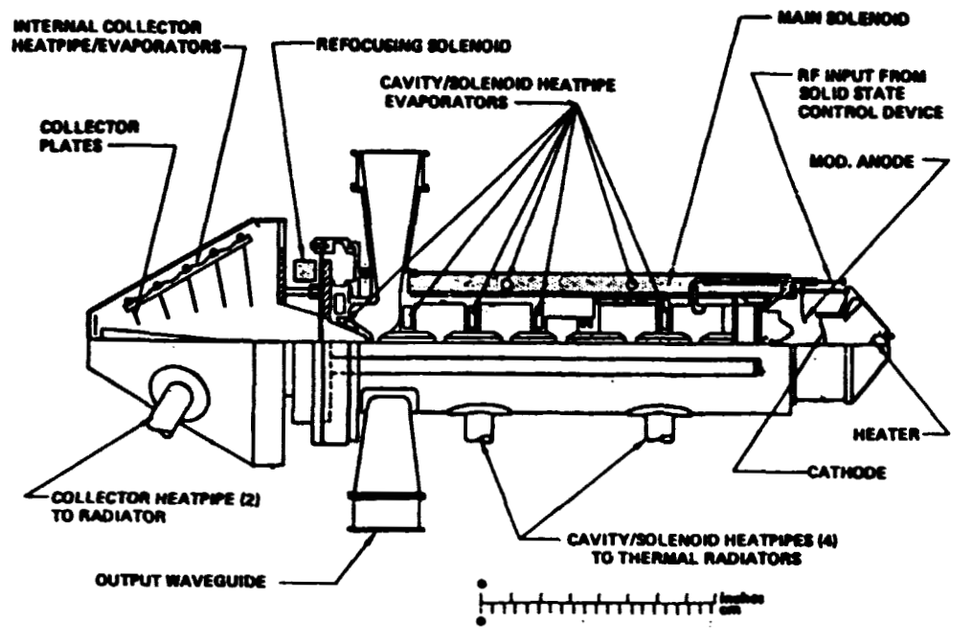

Figure 13-36. 70Kw Klystron

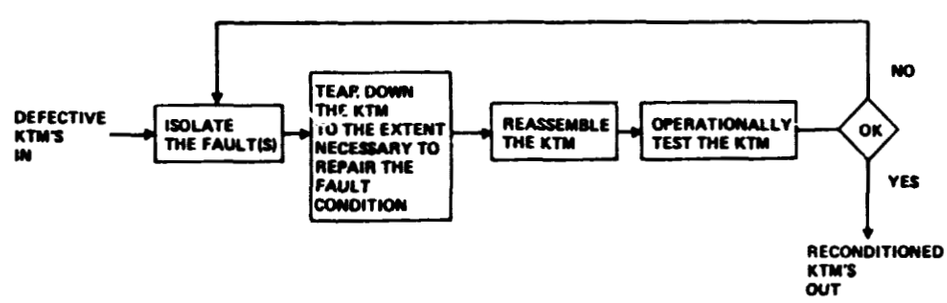

Figure 13-37. Klystron Tube Module Refurbishment Operational Flow

TABLE 13-7
KLYSTRON TUBE MODULE FAILURE MODES

	Assumed Percent of KTM's with this failure
Most Common	
o Cathode Failure	80
o Heater Failure	20
o Thermal Control Pump Bearing Failure	10
Less Common	
o Output Window Arc Damage	5
o Solonoid Failure	5
o Collector Failure	5
o Output Cavity Failure	5

Assumes some have multiple failures

The teardown of the KTM has been analyzed and the resulting operational flow sequence is shown in Figure 13-38. Table 13-8 defines the stations, support equipment, crew floor space, and number of stations required for each step.

Table 13-9 summarizes the facilities, crew size and support equipment required for one KTM refurbishment production line.

Miscellaneous Components Refurbishment Systems and Operations

When the KTM's and their attached phase control system components are taken away from the list of components to be refurbished we end up with the components listed in Table 13-10. A refurbishment plan comparable to that just presented for the KTM's has not been formulated. For the time being, a single maintenance module has been assumed to be adequate for processing these miscellaneous components. Figure 13-39 illustrates this module and shows the estimated crew size.

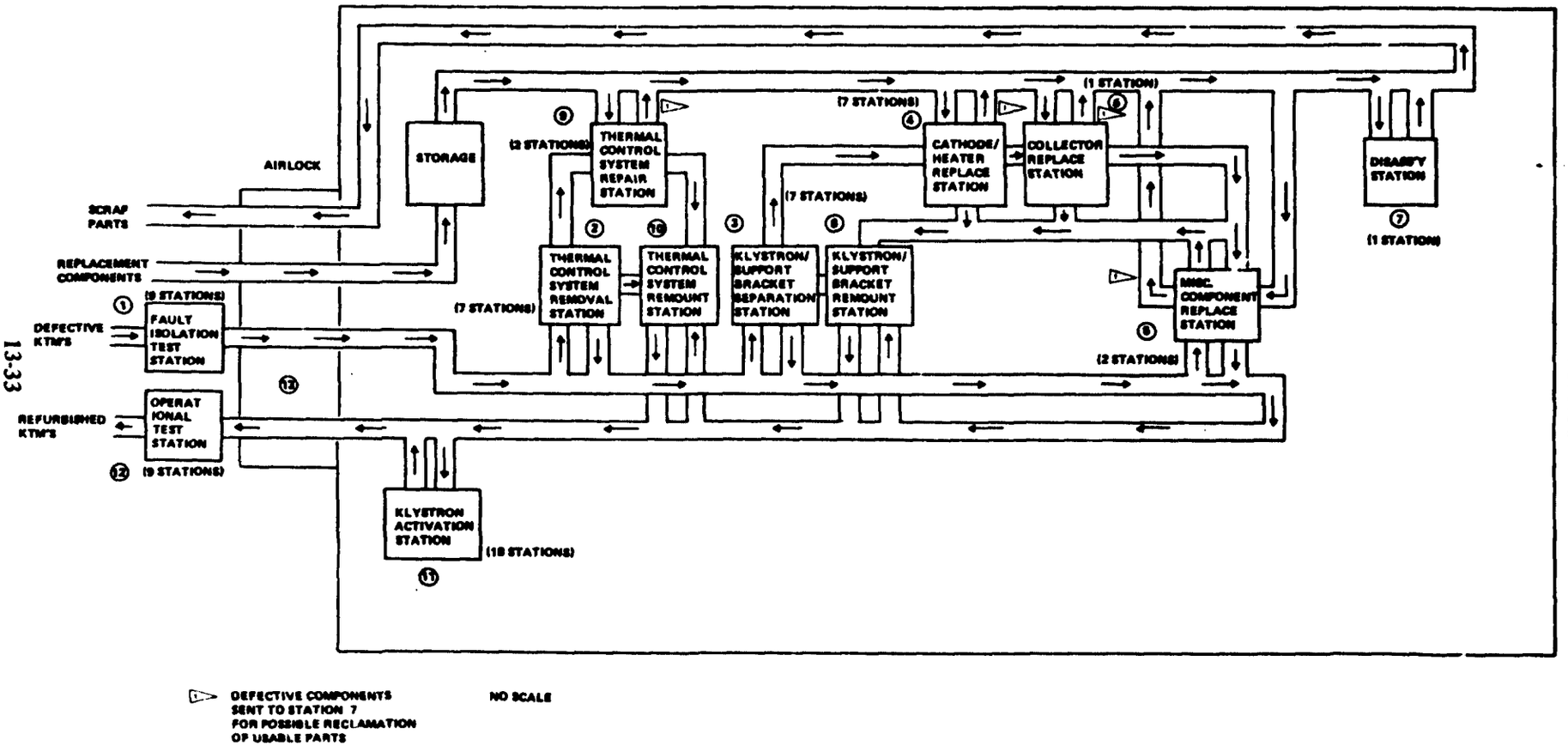

DEFECTIVE COMPONENTS SENT TO STATION 7 FOR POSSIBLE RECLAMATION OF USABLE PARTS

NO SCALE

Figure 13-38. Klystron Tube Module Refurbishment Operations

Table 13-8. Klystron Refurbishment Facility Stations, Support Euipment, and Crew

REF. NO.	STATION OR LOCATION	SUPPORT EQUIPMENT	CREW/ SHIFT	REMARKS	TIME REQ'D. MIN.	FLOOR AREA, M^2	%	NO. OF STATIONS	TOTAL FLOOR AREA	CREW
1	Fault Isolation Test	Power supply Wiring harness Multitest system Microwave absorber fixture Cherrypicker	2	High voltage, microwave, and x-ray hazard	30	4 ▷	100	9	36 ▷	18
2	Thermal Control System Removal	Valve actuator Fluid purge system Wrenches	1	Close valves on either side of disconnect Attach purge fittings Open purge valves Disconnect fluid lines	30	4	80	7	28	7
3	Klystron/Support Bracket Separation	Nut driver Wrenches Screw driver	1	Disconnect conductors Disconnect distribution waveguides Disconnect mechanical fasteners	30	4	80	7	28	7
4	Cathode/Heater Replace	Cathode/heater Removal tool	1	Remove cathode/heater assembly Install new assembly into klystron tube	30	4	EST. 80	7	28	7
5	Collector Replace	Collector removal tool Storage provisions	1	Remove collector Replace with new collector	30	4	5	.4 = 1	4	1
6	Miscellaneous component replacement	Nut driver Wrenches Screw drivers Storage provisions	2	Includes phase control components	30	8	20	1.76 = 2	16	4
7	Disassembly station	Nut driver Wrenches Screw drivers Storage provisions Scrap parts container Saw Shears	1	Reclaim usable components; scrap the rest	60	4	5	.88 = 1	4	1

▷ Outdoor Activity

Table 13-8 (Cont.)

REF. NO.	STATION OR LOCATION	SUPPORT EQUIPMENT	CREW/ SHIFT	REMARKS	TIME REQ'D	FLOOR AREA, M^2	%	NO. OF STATIONS	TOTAL FLOOR AREA	CREW
8	Klystron remount	Nut driver Wrenches Screw drivers	1	Connect conductors Connect waveguides to klystron Connect mechanical fasteners	30	4	80	7	28	7
9	Thermal control system repair	Fluid purge system Welder Nut drivers Wrenches Storage provisions	2	Repair motors and pumps Seal microcracks or punctures in radiators	60	8	10	1.76 = 2	16	4
10	Thermal control system remount	Valve actuators Wrenches Fluid supply system	1	Refill or top off fluid after assembly	30	4	80	7	28	7
11	Klystron activation	Valve actuator Vacuum gage system Vacuum pump system Power supply Oven Cathode activation system	2	Bake out the tube Pump down and then vent to open space to achieve final vacuum Activate cathode (no RF)	60	8	100	17.6 = 18	144	36
12	Operational test	Power supply Wiring harness Multi-test system Microwave absorber Heavy fixture picker ▷	1	High voltage, microwave, and X-ray hazards Use stressed pulse test	30	4 ▷	100	8	36 ▷	9
13	Airlock/storage area	Pallet manipulators Component manipulators Air supply/purge system Door actuators	1	Load/offload components between pallets and conveyors Move pallets into/out of airlock		100		1	100	1
14	Conveyor system	Conveyors Conveyor pallets Conveyor junctions				18		7 DECKS	126	
								TOTAL 550 M^2		
									TOTAL CREW	108/SHIFT

▷ Same cherrypicker as used in Station 1

7 DECKS X 200 M^2/DECK = 1400 M^2 AVAILABLE

TABLE 13-9
BASELINE KTM REFURBISHMENT SYSTEM REQUIREMENTS

Item			No Req'd
o	Maintenance Module - Type A (includes airlock and conveyor system)		1
o	Crew		
		Refurb Operations 109 per shift	230
		Supervision 6	
		115	
o	Support Equipment		
	o	Gantry-mounted cherrypickers	6
	o	Test Stands & Systems	18
	o	Fluid purge/refill system	7
	o	Welders - Radiator	2
	o	Klystron bakeout/vacuum system	18
	o	Misc. hand and power tools	TBD
	o	Storage provisions	TBD
	o	Conveyors	3

Does not include support crew (hotel, food service, etc.)

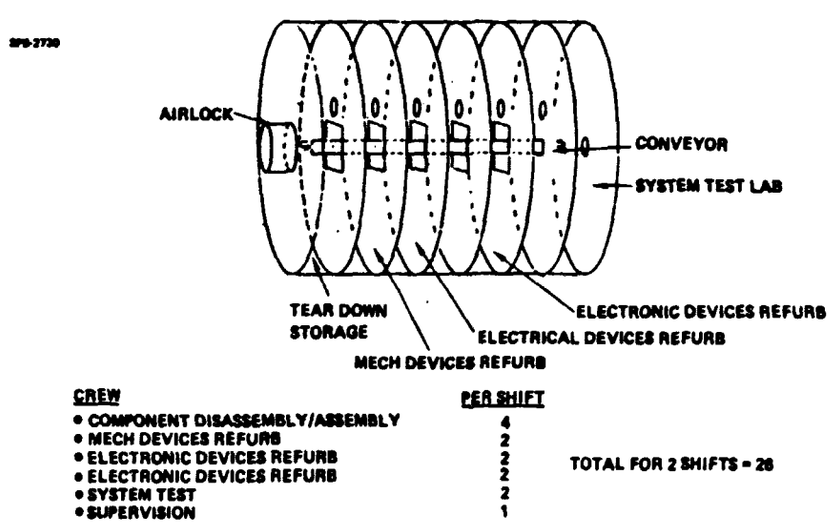

Figure 13-39. Miscellaneous Components Refurbishment Facility

TABLE 13-10

REFURBISHMENT MODULE

		Qty/Month
o	Components to be worked on	
	o Cell string blocking diodes	5.8
	o Switchgear	7.5
	o DC/DC converters	20
	o Disconnect switches	2.7
	o DC/DC converter thermal control	3.3
		38 devices/month

- o Work Areas
  - o Mechanical Devices Repair
  - o Electrical Devices Repair
  - o Electrical Devices Repair
  - o System Test
    - o Large power supply
    - o
  - o Storage

Integrated GEO Base Maintenance Support Systems and Operations Summary

The previous two sections have established the requirements for two maintenance modules and their associated support equipment and crew. To integrate these systems into the GEO base, it is necessary to add the maintenance vehicle docking and handling provisions, the payload handling provisions, and the track system that intertwines these areas into the GEO base track network. In addition, it will be necessary to add three crew habitat modules for housing the maintenance crew. Figure 13-40 shows the various elements that have to be integrated into the GEO base. Table 13-11 summarizes the crew size.

Maintenance OTV Docking Systems and Operations

Requirements for four maintenance OTV's have been established (refer to Figure 13-41). At the GEO base, provisions must be made for docking of each vehicle plus provisions for parking the payload.

SPS-2728

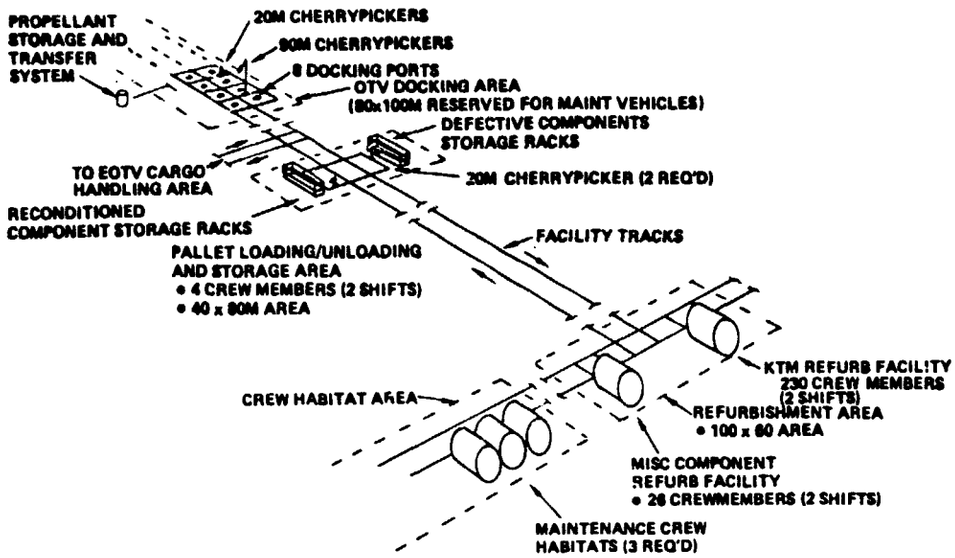

Figure 13-40. Satellite Maintenance Support Provisions at the GEO Base

Table 13-11. Satellite Maintenance Crew at the GEO Base

SPS-2760

KLYSTRON TUBE REFURB	PER SHIFT	TOTAL FOR 2 SHIFTS
SUPERVISION	(6)	(12)
REFURB OPERATIONS	(109)	(218)
FAULT ISOLATION TEST	18	
THERMAL CONT	18	
BRACKET HANDLING	14	
KLYSTRON REFURB	8	
MISC COMPONENT REFURB	4	
SCRAPPING	1	
KLYSTRON ACTIVATION	36	
OPERATIONAL TEST	9	
STORES	1	
MISC. COMPONENT REFURB		
SUPERVISION	(1)	(2)
REFURB OPERATIONS	(12)	(24)
DISASS'Y/ASS'Y	4	
MECH DEVICES	2	
ELECTRICAL DEVICES	2	
ELECTRONIC DEVICES	2	
SYSTEM TEST	2	
PALLET LOADING/OFFLOADING AND STORAGE		
CHERRYPICKER OPERATORS	(2)	(4)
TOTAL	130	260

▷ DOES NOT INCLUDE SUPPORT PERSONNEL (HOTEL, FOOD SERVICE, ETC.). THESE WILL BE ACCOUNTED FOR AT THE GEO BASE LEVEL

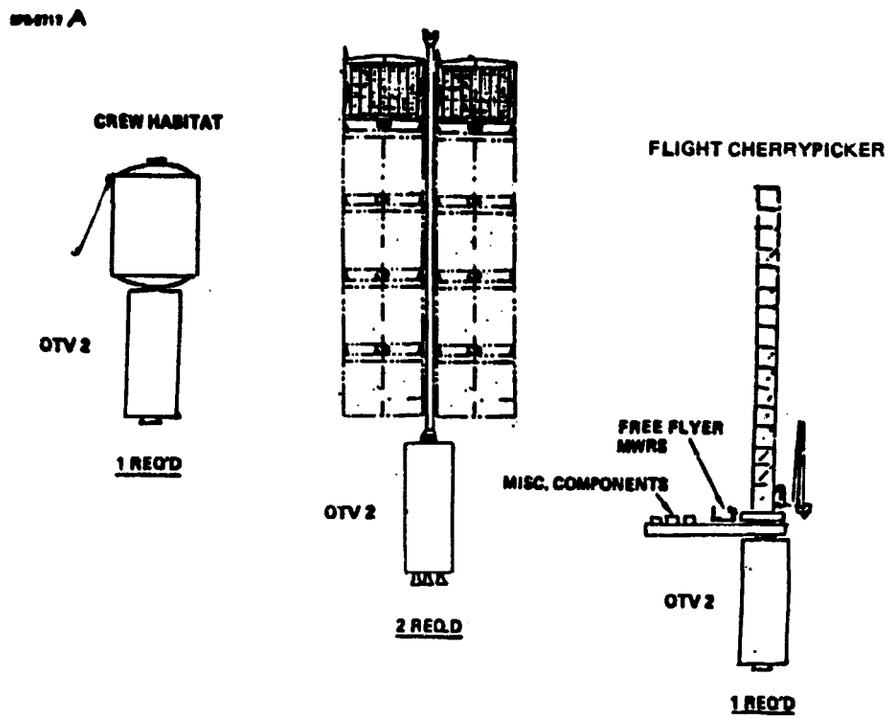

Figure 13-41. SPS Maintenance Transportation Vehicle Fleet

A total of eight docking ports are required. Every 4½ days, an OTV with KTM pallets will be launched from the GEO base and another OTV will be incoming from a satellite. Stacking/unstacking the pallets on/off the OTV's will require a 90 m cherrypicker working one shift per day. This cherrypicker would also be used for a few days once every 90 days when the traveling maintenance crew returns to the base. This maintenance OTV area would be integrated into the POTV and cargo tug docking area required to support the satellite construction operations.

Pallet Loading/Unloading and Storage Area

A dedicated pallet loading/unloading and storage area with some support equipment will have to be provided. Figure 13-42 shows the KTM cargo pallet and the KTM racks.

The cargo pallets will be offloaded from the OTV and transported to the handling area on cargo transporters. A pair of 20 m cherrypickers will unload the KTM racks from the pallet and will move them to a defective KTM storage area.

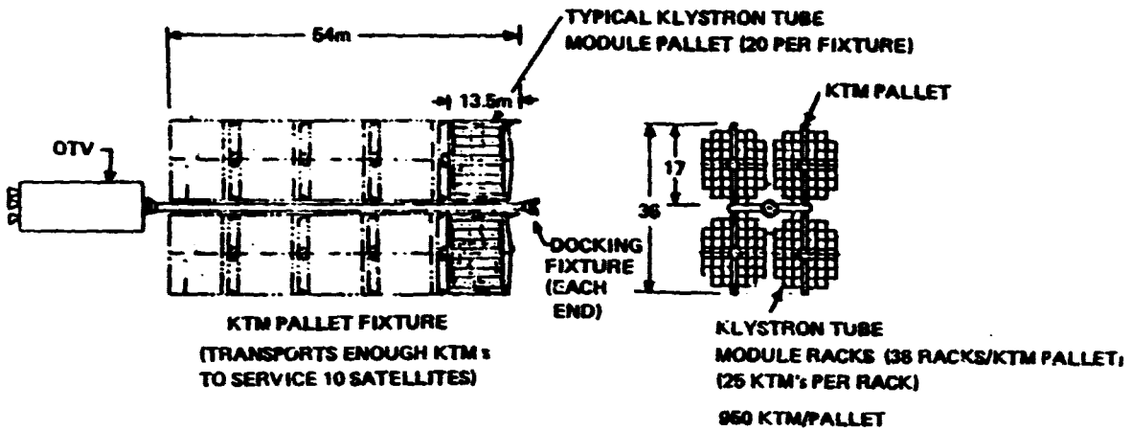

Figure 13-42. KTM Pallet Vehicle

When a load of defective KTM's are required at the KTM refurbishment area, the cherrypickers will load up a transporter with the racks of defective KTM's. This transporter hauls these units over to the facility where the KTM's are individually removed from the racks for processing.

As reconditioned KTM's emerge from the processing line, they are loaded into the racks that were liberated when defective components were removed. When a complete load of reconditioned KTM's are ready, the transporter moves back to the Pallet/Loading Offloading and Storage Area. The racks are placed into storage.

When it is time to load up the KTM cargo pallets, the reconditioned KTM's are removed from storage and loaded onto the pallets. These pallets are then transported to the OTV docking area where they will be stacked onto an OTV.

The miscellaneous defective components (switchgear, PPU's, etc.) will also be returned by the same vehicle that brings in the defective KTM's. These units could be temporarily stored at the pallet loading/offloading and storage area or could be brought directly to the miscellaneous component refurbishment module.

There would then be a 90 day period where no maintenance is being conducted at the satellites. As the processing center is refurbishing KTM's at the rate of 6612 KTM's per month, it will be necessary to provide storage for three months of production,

or roughly 20,00 KTM's. There are 950 KTM's per pallet loaded into 25 KTM racks. Therefore, storage is required for a minimum of 800 KTM racks.

It should also be noted that the replacement components are delivered to GEO via the EOTV's that will be delivering construction components. The replacement parts would be offloaded at the EOTV cargo tug handling area and sent to the maintenance storage area. The components could be temporarily stored here and then sent to the maintenance modules as required.

5.0 INTEGRATED SPS MAINTENANCE OPERATIONS PLAN

The integrated SPS maintenance operations concept is depicted in Figure 13-43. The top-level timeline, shown in Figure 13-44, shows that there are two types of operations: 1) maintenance operations at the satellite, and 2) refurbishment of defective components at the GEO base.

The at-satellite maintenance occurs over a 90 day period when each satellite is visited by a mobile maintenance crew, see figure 13-45, and equipment for a 3.5 day staytime. Twenty operational 5 GW SPS's are assumed in the mission model. At the end of the 90 day period, the traveling maintenance crews are returned to Earth. They return to orbit after 90 days on Earth and the repeat the maintenance visit routine. Hence, each satellite is visited twice a year for maintenance. The refurbishment operations are conducted continuously with a crew changeout every 90 days.

There are 260 GEO base maintenance crewmembers plus 40 support personnel (see Table 13-11) that must be rotated every 90 days. These crewmembers will be delivered to LEO via personnel launch vehicles (PLV's), along with the other SPS spaceworkers. They will, in turn, be transported to the GEO Base in the personnel orbital transfer vehicles (POTV).

The command and control tasks that have been identified for the integrated SPS maintenance operations are given in Table 13-12.

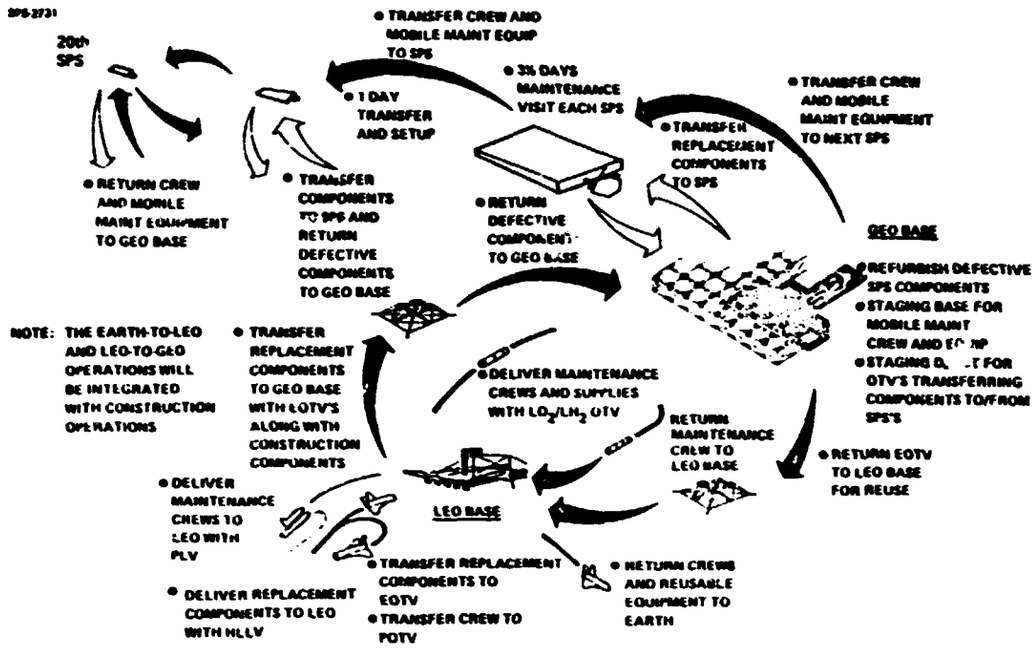

Figure 13-43. Integrated SPS Maintenance Operations

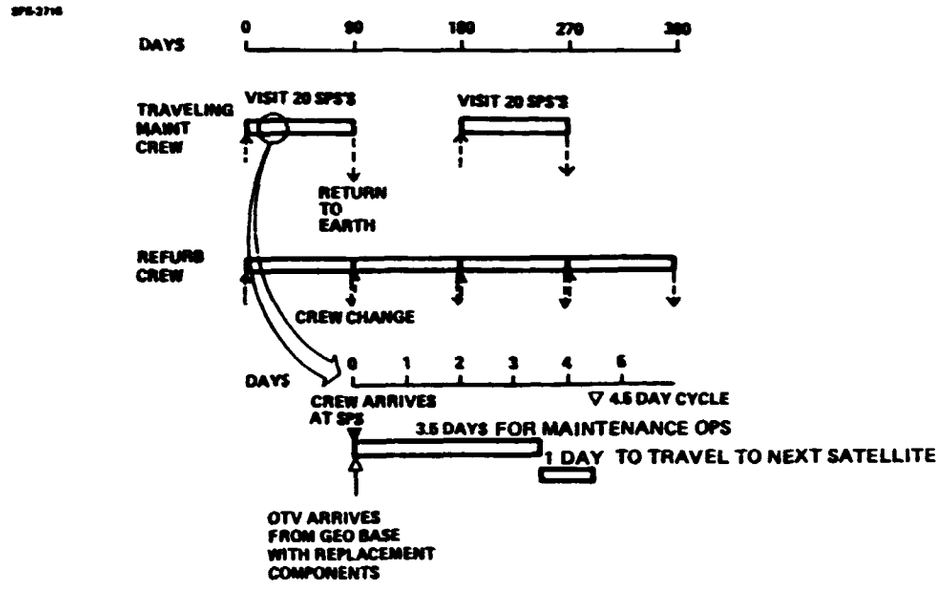

Figure 13-44. SPS Maintenance Timeline

Table 13-12

COMMAND AND CONTROL TASKS

LOCATION/OPERATION: SPS Maintenance

BASE OPERATIONS FUNCTIONS	COMMAND & CONTROL TASKS	INTERFACE INTERNAL	INTERFACE EXTERNAL
o SPS Maintenance Planning	o Receive SPS performance data		X
	o Re_eive SPS _ault annunciation reports		X
	o Diagnose fault conditions	X	
	o Create SPS maintenance _lan		
	o define list of replacement parts required	X	
	o defi..e location of each _aulty component	X	
	o prepare a time-lined schedule for replacement of each faulty component	X	
	o Transmit maintenance plan		X
	o Order replacement parts o factory order or, o refurbished parts		X
	o Coordinate component transportation requirements		X
	o Receive SPS program constraints, master schedule		X
	o Define crew skills and training requirements	X	
SPS Maintenance Crew Operations	o Create crew assignments	X	
	o Schedule crew transportation		X

Table 13-12 (cont.)

COMMAND AND CONTROL TASKS

LOCATION/OPERATION: SPS Maintenance

BASE OPERATIONS FUNCTIONS	COMMAND & CONTROL TASKS	INTERFACE INTERNAL	INTERFACE EXTERNAL
o GEO Base SPS Maintenance Operations	o Inventory control		
	o replacement parts	X	
	o defective components	X	
	o refurbished components	X	
	o Order replacement parts		X
	o Coordinate intra-base transportation requirements	X	
	o hardware		
	o crew		
	o Coordinate cargo handling equipment requirements	X	
	o equipment		
	o crew		
	o maintenance of equipment		
	o Monitor maintenance equipment and system status	X	
	o availability		
	o maintenance		
	o replacement equipment		
	o consummables		
	o Control crew operations		
	o assignments	X	
	o training	X	
	o scheduling	X	
	o crew rotation		X
	o Coordinate refurbishment operations plan and status with ground-based SPS Operations and Maintenance		X
	o Refurbishment operations status monitoring	X	

Table 13-12 (cont.)

COMMAND AND CONTROL TASKS

LOCATION/OPERATION: SPS Maintenance

BASE OPERATIONS FUNCTIONS	COMMAND & CONTROL TASKS	INTERFACE INTERNAL	INTERFACE EXTERNAL
o Traveling Maintenance Crew Operations	o Receive/coordinate SPS maintenance plan		X
	o Coordinate accumulation of replacement components	X	X
	o Coordinate transportation requirements		X
	o Monitor/control mobile maintenance support equipment and systems (crew habitat, flying cherrypicker, KTM pallets) o availability o maintenance o replacement equipment o consummables	X	X
	o Control crew operations o assignments o training o scheduling	X	
	o Coordinate SPS power-down/power-up		X
	o Monitor/control at-satellite maintenance operations	X	
	o Monitor/control vehicle-to-SPS docking/launching maneuvers	X	
	o Monitor/control vehicle traffic on and around the satellite	X	
	o Control vehicle inter-satellite flight maneuvers	X	X
	o Monitor/control built-in maintenance support equipment o availability o maintenance o consummables	X	

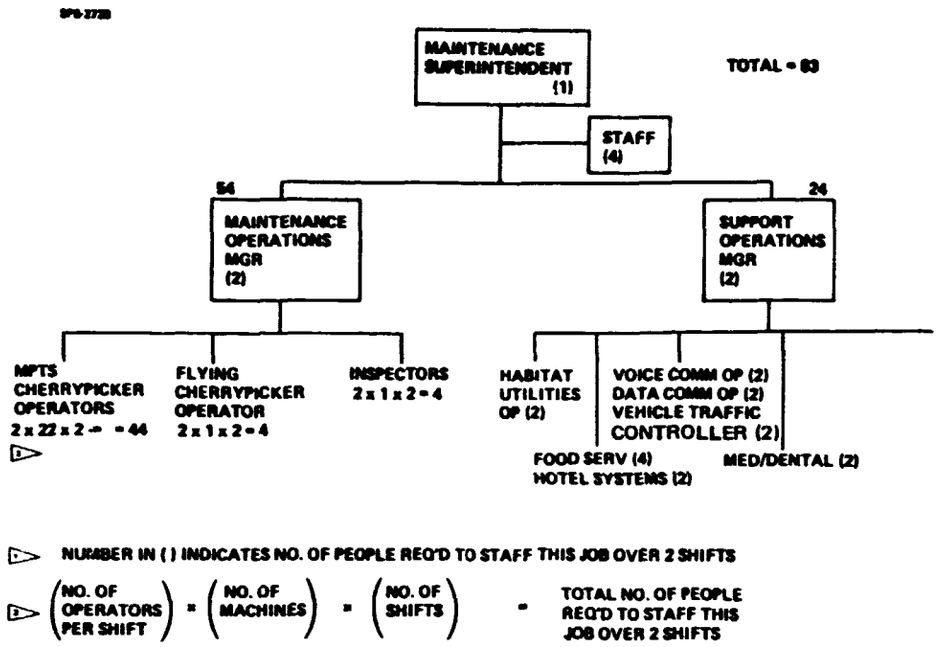

Figure 13-45. Mobile Maintenance Crew

SECTION 14

SPS/UTILITY GRID OPERATIONS

		Page
1.0	Dynamic Power Variations in the SPS System	14-2
1.1	Possible Dynamic Variations of Available SPS Power	14-2
1.2	Control Methods for Input Power to Rectenna	14-8
1.3	Control Methods for Output Power from Rectenna	14-11
2.0	Utility System Requirements	14-13
2.1	Utility System Operating Requirements	14-13
2.2	Utility System Reliability/Availability Characteristics	14-17
3.0	Inverter Control and Operation	14-18
3.1	Power Conditioning System	14-18
3.2	Steady-State Control Mode	14-18
3.3	Normal Startup/Shutdown	14-20
3.4	Operation During Faults or Eclipse	14-21
4.0	SPS/Utility Grid Integration	14-21
4.1	SPS Operating Characteristics	14-21
4.2	Utility System Integration	14-22
4.3	SPS/Rectenna/Utility System Reliability Impacts	14-29
4.4	SPS/Rectenna/Utility System Maintenance Impacts	14-34

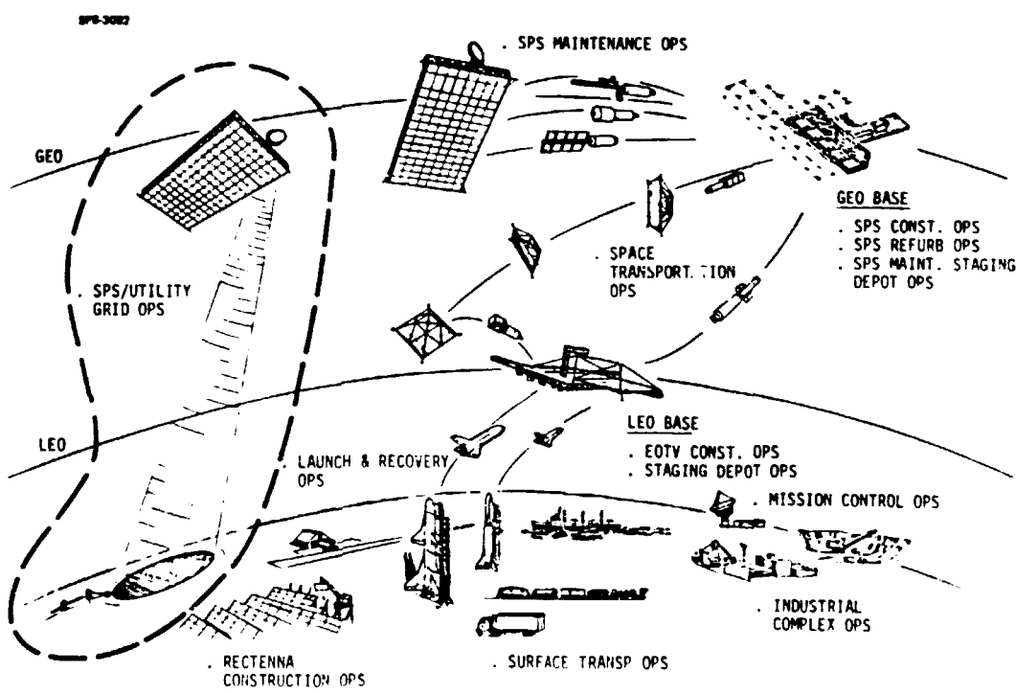

SECTION 14

SPS/UTILITY GRID OPERATIONS

This chapter will discuss the integration of SPS power into electric utility power systems. With the level of detail afforded by the current baseline design the study of this integration could be schematic at best. There is an absolute need for power output control of any generating unit on an electric utility system. To be able to control power one may have to violate economic, environmental and other desirable restrictions placed on every-day operation, but to ensure system integrity and reliability power output control in some form is a necessity.

Paragraph 1.0 will discuss some of the possible dynamic power variations in the SPS system and will develop suggestions for various methods to reduce the power input to the rectenna. It is assumed that reradiation of power from the rectenna is an unacceptable mode of power control. This would then suggest that the only power control of the rectenna output is via the space craft.

The methods for power control developed in 1.0 together with the utility system characteristics developed in 2.0 will then form the basis for the rectenna control characteristics in 3.0 and the SPS/Utility System integration in 4.0

The results indicate that if RF beam control is an acceptable method for power control, and that the site distribution of SPS rectennas do not cause a very high local penetration (40-50%), SPS may be integrated into electric utility system with few negative impacts. Increased regulating duty on the conventional generation, and a potential impact on system reliability for SPS penetration in excess of about 25% appear to be two areas of concern. Assessment of more detailed models and advanced design parameters for the SPS system must be done before it would be possible to investigate the SPS/Utility System integration in more detail.

1.0 DYNAMIC POWER VARIATIONS IN THE SPS SYSTEM

1.1 Possible Dynamic Variations of Available SPS Power

As a first approximation the SPS system consists of a constant power source working into a constant load. However, in practice the available power degrades slowly over the 30 year lifetime and it is modulated by infrequent but relatively rapid fluctuations. Additionally the available load itself may vary both slowly and rapidly in a relatively infrequent manner.

In the following a brief discussion of the relatively rapid (dynamic) power variations in the SPS system will be given for the purpose of devising a technically, environmentally and economically acceptable power control capability for the overall spacecraft-utility system.

Table 14-1 lists some of the conceivable sources of relatively rapid power variations in the SPS system. They are listed approximately in sequence of the associated total yearly loss of energy.

Table 14-1. Characteristics of available power variation in SPS system.

NO.	SOURCE OF POWER VARIATION	RANGE %	FREQUENCY OF OCCURENCE PER YEAR	AV. DURATION OF OUTAGE PER OCCURRENCE MIN/YEAR	TOTAL OUTAGE HR./YEAR	MAX. POWER REDUCTION GW	AV. YEARLY ENERGY LOSS GW HR.	TIME TO MAX POWER LOSS	SCHEDULED YES	SCHEDULED NO
1.	SPACECRAFT MAINTENANCE	0-100	2	2 x 3000	120	5	600	6 MIN	X	
2.	ECLIPSE	0-100	62	3376 TOTAL 71 MAX PER/ OCCURRENCE	56.26	5	281.3	1 MIN	X	
	ECLIPSE WITH SHUTDOWN AND STARTUP			5270	87.8		439	1 MIN	X	
3.	WIND STORM	75-100	0.01	5260	87.6	1.25	109.5	5 MIN		X
4.	EARTHQUAKE	90-100	0.01	1800	30	0.5	15	10 SEC		X
5.	FIRE IN RECTENNA SYSTEM	90-100	0.01	840	14	1	14	30 MIN		X
6.	METEORITE HIT OF SPACECRAFT EQUIPMENT	90-100	0.01	1200	20	0.5	10	100 MS		X
7.	RECTENNA EQUIPMENT FAILURE	91.5-100	1	50	0.833	0.425	0.35	100 MS		X
8.	PRECIPITATION	93.3-100	50	1	0.833	0.335	0.28	1 M		X
9.	POINTING ERROR	94.8-100	5000	0.6	0.833	0.29	0.24	1 S		
10.	IONOSPHERE	98.5-100	20	10	3.32	0.15	0.24	1 S	X	
11.	GROUND CONTROL EQUIPMENT FAILURE	95-100	5	3	0.25	0.25	0.06	0.3 S		X
12.	AIRCRAFT SHADOW	99.99-100	20	20 M 1 M MAX/ OCCURENCE	0.3	0.0005	0.0015	1 S		X

TOTAL WITHOUT SHUTDOWN/STARTUP: 331 HR (3.77%) 1030.8 (2.35%)
WITH SHUTDOWN/STARTUP: 362 HR (4.12%) 1188.5 (2.71%)

The table shows 12 recognized sources for dynamic power variation in the SPS system. Among the listed sources No. 1 and No. 2 causes scheduled down times of 1.36% and 1% respectively. The remaining effects are small and essentially random. Total energy loss is less than 2.7% per year if shut down and start up times associated with eclipses are also considered. Only source No. 1 and No. 2 can cause total loss of power.

It can be seen that among the listed items only the first two, maintenance and eclipse produce 100% outage and both of these fall into the scheduled down time category. The following additional comments can be made.

Spacecraft maintenance will be done a minimum of two and probably maximum four times a year, when klystron amplifiers are used. (With solid state amplifiers the maintenance probably can be done with shorter or no shut down.) The shut down times may be scheduled conveniently around the vernal equinox, in which case the occurrence of yearly exlipses can be reduced by about 6. However, it can be scheduled in any other part of the year in about half yearly intervals. During maintenance periods the solar arrays probably will be turned away from the sun. Thus at the end of maintenance appr. 2 hours array rotation and 1 hour array warm-up will be necessary before the power turn-up sequence can begin. Five minute time is budgeted for the actual power turn-up stabilization period.

Eclipse will occur 62 times a year. In each eclipse period 31 days will be affected. During the first and last day of such a period only penumbra occurs, in the remaining 29 days penumbra and umbra periods are associated with each eclipse.

Figure 14-1 shows the duration of daily exlipse period around the local equinox. A total of 62 eclipse occur per year. The longest one on the day of the equinox is about 71 min. 3376 min. per year is lost on the account of eclipse itself. With the associated shut down and start up times the minimum shut down time varies between 30 min. and 140 min. and causes a total of appr. 5270 min. (appr. 1%) per year total shut down. On the day of the equinox the umbra is appr. 68 min. and the total eclipse period is 71 min. If the system shut down is done in 5 min., the array warm-up varies between 15 min. to 60 min. as a function of the depth of cooling and the start-up sequence requires 5 min., then the minimum shut down times associated with eclipses vary between 30 min. and 140 min. during the eclipse season. On the day of equinox for a 100 units SPS system distributed over $\pm$ 18° orbital arc the first eclipse sequence will start at 113 min. before local midnight, while the last eclipse sequence will be over 173 min. after the local midnight, thus the total affected time period is 286 min. = 4 hours, 46 min. for

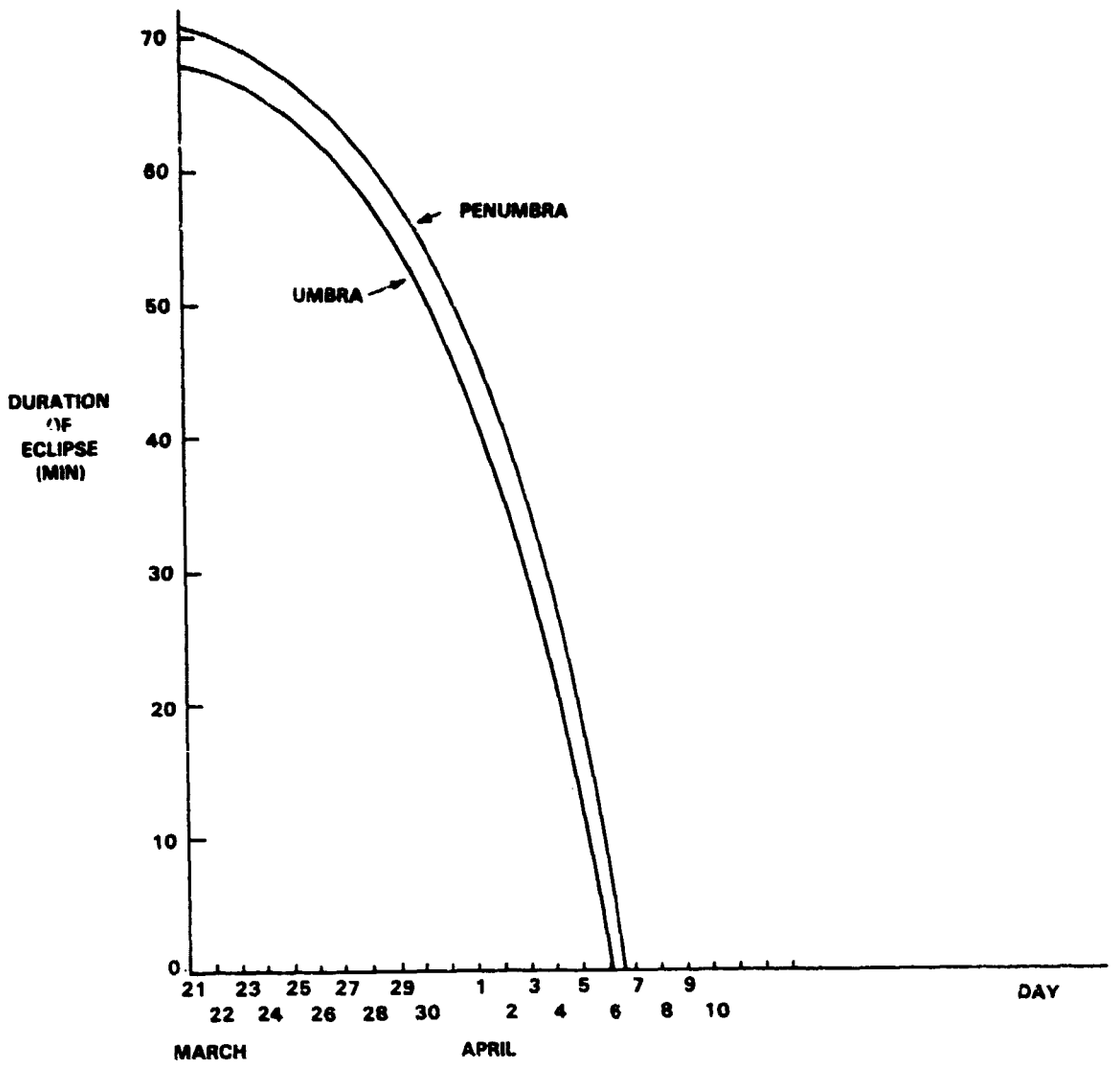

Figure 14-1. Duration of eclipse per day during the spring equinox season.

the complete system. For a 100 SPS unit system, distributed over a ± 18° orbital arc around the local midnight of the center element the eclipse will occur simultaneously for about half the spacecrafts. However, due to the start-up time allowance there will be a short time when all the SPS units will be down. By spreading the units over a larger arc, say ± 36° half of all SPS units can be kept in operation at any time at the expense of allowing less optimum look angles, which require larger rectennas and cause more atmospheric loss. Additionally the total eclipse affected period for the country spreads to a 430 min. = 7 hour, 10 min. period. Table 14-2 shows the local elevation angles for sites at Seattle, Houston and Boston respectively when the spacecraft is at 95°, 95 ± 18° and 95 ± 36° long. respectively.

Table 14-2. Elevation angles for different sites and spacecraft locations.

SITE			SATELLITE LONGITUDE (DEG.)						
CITY	LONG. (DEG.)	LAT. (DEG.)	59	72	77	95	113	122	131
SEATTLE	122	48	8.5	-	20.0	28	33.5	34.4	33.5
HOUSTON	95	30	37.5	-	49.5	55	49.5	-	37.5
BOSTON	72	42	40.0	41.5	40.5	37	27.0	-	14.0

The table exhibits the effect of satellite orbital spreading on earth station elevation angle. The "optimum" spreading for earth stations in the Seattle-Boston longitude range is 50°. However 72° spreading is desirable to limit eclipse caused simultaneous down time to half of a total 100 spacecraft system. For such a spreading eclipse effects will occur from 10 hour, 7 min. pm to 2 hour, 53 min. am relative to the local midnight of the center element of the overall SPS system.

It can be seen that from Table 14-2 that the elevation angle of the satellite is generally reduced with satellite spreading. Assuming that the rectenna [illegible] is unity for the Houston site if it is associated with a spacecraft at 95° longitude the antenna area increases to 1.32 units for ± 18° and 1.38 units for ± 36° longitude difference respectively. For a Seattle site, assuming ± 36 satellite spreading the elevation angle is 34° and the required maximum rectenna area is 1.79 unit. The optimum spreading for the considered extreme East and West sites is 50° orbital arc, which is only somewhat smaller, then the selected 72° maximum arc. It can be concluded from the above, that it is probably economical to set-up the 100 spacecraft system over an orbital arc of ± 36° and thereby limit the simultaneous eclipse operations to about half of the total system. For such a case an SPS system with 20% penetration will cause a max. 10% reduction in the available power of the country on the day of the equinox in the 10 hour, 7 min. pm to 2 hour, 53 min. am period.

Windstorms. It is possible, but probably uneconomical to design the rectenna for extreme wind loads. Table 14-1 assumes that the survival specification of the rectenna is given by allowing to loose 25% of the rectenna area at wind levels corresponding to the 1 per 100 year occurrence. Assuming that the repair of such a 25% damaged antenna takes 1 year the average down time of the damaged section is 5260 min. causing an average .25% = 109.5 GW Hr. loss per year energy per site. In practice probably an even larger average outage allowance will be economical, since reduction of wind survival requirement on the rectenna can reduce its cost considerably. The difficulty with wind caused outages is that they are unscheduled, although few hours warning can be expected ahead of serious storms.

Earthquakes. Earthquakes are not expected to seriously damage the rectenna since it is built from relatively low and compact structural elements. However, misalignment of the antenna panels and disruption of some of the transmission lines can be expected.

Fire. Fire hazard in the rectenna system is extremely low, assuming that nonburning insulating materials are used and the growth of vegetation under the rectenna area is kept under control.

Meteorites. Collision between the spacecraft and meteorities is a very low probability occurrence and even when it happens will influence only a very small portion of the system. Probably the most sensitive part of the spacecraft is the rotary joint. However, because of its size a damage beyond 10% of its capacity is extremely unlikely.

Rectenna equipment failures. Only the higher power level stages of the power collecting system should be considered from the point of view of substantial dynamic power variation. However, this part of the system can be designed with any required redundancy and availability. The assumed numbers represent the results of preliminary economical considerations.

Precipitation. Rain, snow and ice will influence the rectenna power output by various amounts. However, with proper design none of these factors can cause very deep power fades. The effect of rain is mostly related to the scatter by rain drops in the atmosphere and to a smaller extent to the impedance detuning effect of dipole insulating material wetness. Rain fading is a function of rain rate and elevation angle of the satellite. Worst case occurs in the Northeast (Boston) but even there the time per year when rain attenuation exceeds .4 db is practically negligible. Dry snow accumulation caused fading is even smaller. Additionally, for the snow belt sites the tilt angle of the rectenna panels

relative to the local vertical will be in the 45° or more range (see Table 14-2) which will reduce the hazard of substantial snow accumulation.

The greatest precipitation hazard is ice accumulation which detunes the antennas, absorbs power and may cause structural damage of the panels. In the middle of the rectenna the incoming microwave power is about 21 w/ft.^{2}. This is about 2.5 - 5 times less than the deicing power used for typical antenna reflectors when the deicing heater is delivering all its heating power toward the reflector.

If only dipole deicing is attempted the available power may be adequate in the middle of the rectenna, but the required heating circuit is most likely not economical. At any rate, over the outer rings of the rectenna not enough heating power is available and the operation of a deicer may require the use of outside power for a short while (hours). Table 1 assumes no deicing system, but a mechanical design, which protects the rectenna panels against ice load caused failures, except for infrequent extreme cases. The transmission lines of the system will not be sensitive to icing conditions because of their high current load automatically assures ice free operation.

Pointing error. For a properly designed SPS pointing system a complete mispointing of the beam requires a triple failure in the spacecraft phase distribution system. According to GE's, Part 4, Phase 1 final report, Table 3.2-1 (December 14, 1978) the probability of this occurence is p = .00000646 or 203 sec. per year. This is a type of down time which can occur without warning and could cause total loss of power. However, because of its very small probability of occurrence it is not listed in Table 14-1.

The major power fluctuations associated with pointing errors are essentially caused by spacecraft attitude control system jitters and thermal variations. Although these are quite frequent, the relative power modulation is small.

Ionospheric effects. The effect of predictable Faraday rotation is relatively small. The worst fluctuations will be in the early part of January, close to the local sunset and sunrise times. The efect will be maximum at the peak sunspot activity, which has an 11 year periodicity. Additionally sporadical ionospheric effects may cause deeper power fluctuations than shown in Table 14-1 . However the occurrence of these will be even less frequent.

Ground control equipment. This fade is related to a failure in the pilot transmitter station. Since this equipment can be made with any required amount of availability the absolute loss of related power is negligible. Disturbances are mostly related to switching times to redundant equipment.

Aircraft shadow. Nominally no aircraft overflow will be tolerated at rectenna sites. However, if this happens by accident, the associated power fluctuations will be very small.

On the basis of the previous considerations Figure 14-2 shows available SPS power to utility grid considering random errors, failure modes, scheduled maintenance and eclipse, including shut down and start up times. Total system down time is 207.8 hour per year (2.3%).

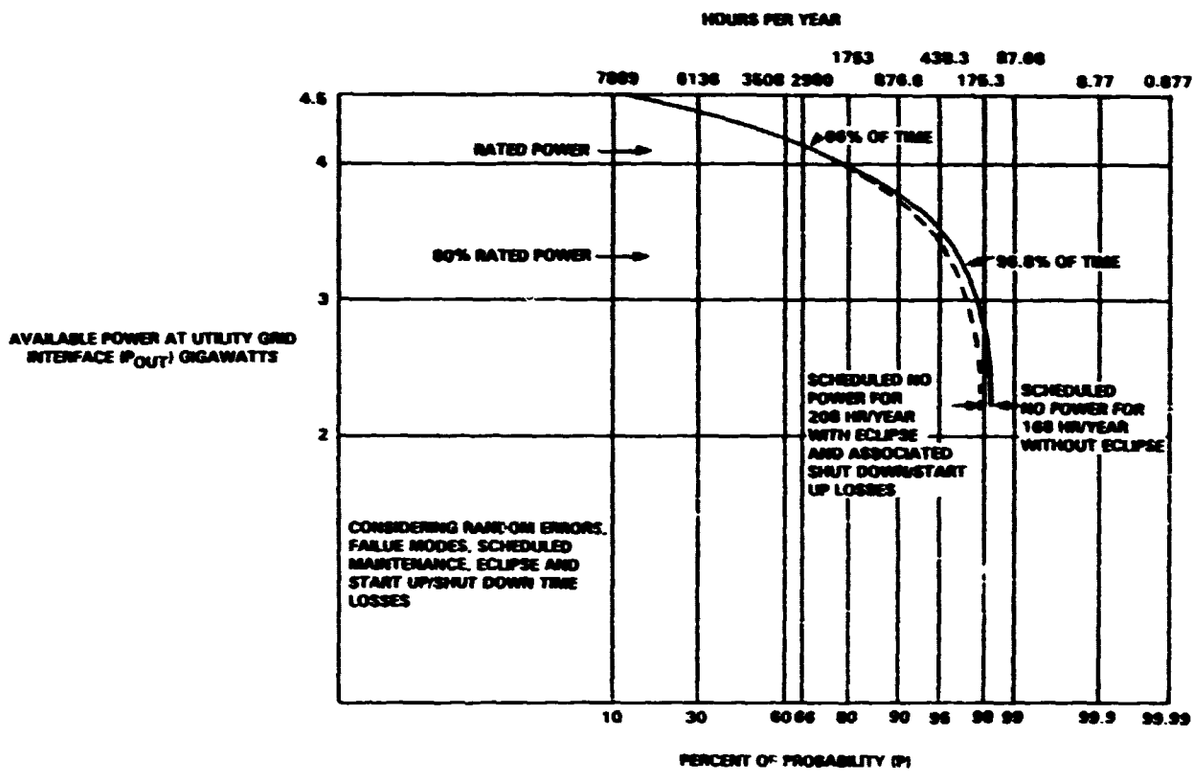

Figure 14-2. Available SPS power to utility grid.

1.2 Control Methods for Input Power to Rectenna

When it is necessary to implement scheduled or unscheduled output power level variations from the spacecraft several methods can be considered.

Table 14-3 shows 7 methods to control the power input into the rectenna. Reduction of power to zero will require maximum .45 sec. The various methods have different noise environmental effects.

The following comments can be made.

Table 14-3. Various methods to reduce power into rectenna.

METHOD	EFFECT ON LIFETIME	RANGE OF POWER	TIME DELAY	ON	OFF	WHERE THE POWER GOES	ENERGY REQUIREMENT
1. REDUCE KLYSTRON BEAM VOLTAGE	SMALL	100-80	300 MS	X		THERMAL RADIATION ON SPACECRAFT	NONE
2. INTRODUCE QUADRATIC PHASE ERROR TO ANTENNA APERTURE	NONE	100-50	300 MS	X		INCREASES POWER AROUND RECTENNA. (~14 KM)	NONE
3. RANDOMIZE ANTENNA PHASES	NONE	100-0	450 MS	X		INTO 1000 KM DIA. FOOTPRINT	NONE
4. TILT OF ANTENNA PHASE	NONE	100-0	1 SEC.	X		OFF EARTH	NONE
5. TILT OF ANTENNA	MODERATE	100-0	216 S	X		OFF EARTH	MODERATE
6. DISCONNECT KLYSTRON RINGS		100-0	3 S		X	AROUND RECTENNA	NONE
7. TILT SOLAR ARRAY AND 6	LIFE OF SLIP RING	100-0	131 MIN.		X	TO UNIVERSE	LARGE

Reduction of klystron beam voltage is a convenient way of reducing power into the rectenna. If the reduction is done on all klystrons by an equal amount the pattern of the antenna remains unchanged. The reduced power level typically will deteriorate the efficiency of the klystron, thus it has to be implemented in such a way that the total loss power associated with the DC to RF conversion does not exceed the tolerable level. Additionally frequent large output power variations from the klystron may affect its life time. For this reason it is probably prudent to assume a depth of power variation to 80% only.

Quadratic phase error. A way to reduce the power input to the rectenna is by widening the beam of the space antenna. There are several ways to achieve this. One possible method introduces a gradually increasing phase error into the rings of the space antenna, simulating a quadratic phase error in the aperture distribution. This method leaves the operating conditions of the klystrons unchanged. The power goes into a widened main beam and slightly deteriorated sidelobes.

Nominally the power density at the edge of rectenna is appr. 2.9 mw/cm^2, about 8 times below the maximum tolerable level for continuous irradiation. During such power control condition the nominal level will increase by 3 - 4 db but will stay still considerably below the tolerable level. This method of control may or may not require any increase for the total site area.

Phase randomization. Another method which leaves the operating power conditions of the klystrons unperturbed but reduces input power to the rectenna is to randomize the phases of the klystrons. This may be implemented by disconnecting the phase information from the klystron drive, or intentionally replacing it by a random phase. This method is capable of reducing the rectenna input to zero, but low level power will be radiated into a large geographical area. The diameter of this area is determined by the size of the subarray. If this is 10 m then the 3 db footprint of the subarray pattern is about 1097 km. The average power level in the middle of this disc is about 40 db lower than in the middle of the rectenna during normal operating conditions (2.3 μw/cm^2). If a 10 m diameter antenna is aligned toward the spacecraft it can pick up appr. 1 w power, which may interfere or damage sensitive microwave equipment. Such damage can be avoided by some filtering, but the economical or other penalties are not known at the present.

Tilt of antenna phase. This method scans the main beam of the antenna off the earth by the introduction of a pre-programmed linear phase variation over the aperture of the space antenna. It requires an electronically controllable phase shifter at each klystron input. This method favors a limit of 5 m on the linear dimension of the subarray. Under this condition the peak of the first sidelobe of the subarray pattern is at - 5.3° from the maximum and it is at -13 db level. Thus when the beam is scanned by appr. 5.3°, that is enough to put it above the North Pole, the sidelobe level increase over the illuminated part of the earth will be only about 13 db higher than during normal operating conditions. It is assumed that before scan the antenna phase has to be randomized and confirmed, thus the total operation will require about 1 sec.

Tilt of antenna. This is a slow and control energy consuming method to tilt the beam away from the rectenna and earth. Since typically about 9° East-West rotation is required and the normal antenna rotation is 1 per day, 36 min. is required if the relative rotation is achieved by simply disconnecting the antenna drive. Table 6.1-3 assumes that an order of magnitude faster emergency drive mode is available, thus the time to implement such a control action is 216 sec. When the method is combined with the antenna phase tilt the power can be removed in 1 sec. and the 13 db increased sidelobe level condition can be restricted to 215 sec.

Disconnection of klystron rings. This method can be used to vary power into the rectenna in the 0-100% range with minimum impact on the wide angle sidelobe envelope. An advantage of this scheme is that it requires only on off control of the klystron power. Several strategies are possible. When the klystron shut down starts with the central region then the width of the main beam remains appr. constant and only the nearby sidelobes increases out to about a 100 km diameter area. When the klystron shut down starts with the outer ring, then the main lobe width increases and the effect on the absolute power level of the sidelobes is very small. When the klystrons are shut down on a semirandom basis then the main lobe shape remains unaffected and the generated sidelobe power is distributed over a very large area. In each of these cases the disconnection of certain transmit power reduces the rectenna input power by appr. twice of this amount because the associated antenna area is also removed.

Tilt of solar array. This method is very slow and requires relatively large amounts of energy. Normally the solar array rotates once per year or .9856 deg./day. Thus a 90° rotation would require 91.31 day. Even with a 1000 times faster emergency drive capability 2.19 hour will be necessary for a 90° rotation. The only time when this mode of control can be contemplated is at the beginning and of maintenance periods. This allows the complete shut down of the spacecraft including the high voltage DC system. (It is interesting to note that with the 2.19 hour shut down sequence the average edge velocity of the solar array is about .5 m/sec.)

In actual practice the above described methods probably will be used in various combinations. This allows complete shut down of the rectenna in about .45 sec. or a rate of change appr. 11.1 GW/sec. If the same control methods are used for start-up then the times will be similar, except the warm-up time of the solar array has to be added as applicable.

1.3 Control Methods for Output Power From Rectenna

Since the power from the spacecraft cannot be shut down in less than .45 sec. the rectenna may need a shut down capability for the 0 to .45 sec. period. The total energy received during this period is 625 kw hr. Since this energy is relatively small it is conceivable that a dummy load with this energy capacity is provided.

If the shut down of the spacecraft is not desirable or the shut down mechanism failed and the required shut down time is much longer than .45 sec. (due to unavailability of load centers) then only two options are available.

a) Reradiation into space.

b) Local utilization of surplus power.

Reradiation into space can be implemented in approximately 10 μs. The tolerability of this method depends on the directivity, level, frequency spectrum and duration of the reradiated microwave power. Siting (natural shielding of mountains, distance from population centers) and rectenna design may influence also tolerability. Most of the generated microwave power will be in the vicinity of the rectenna and will reduce rapidly with distance.

Local utilization of surplus power may be employed to generate products like hydorgen. However, the economic feasibility of this approach is questionable, since in a well planned system the total average surplus power may not be much and the required plant investment is considerable. The main advantage of such a facility may not be economical, but that it allows to run the spacecraft system in the least perturbed manner, thus it can contribute to better availability and stability of operation.

2.0 UTILITY SYSTEM REQUIREMENTS

2.1 Utility System Operating Requirements

Currently accepted response characteristics for utility system generating plants have been the basis for establishing the integration of the SPS system with the existing utility systems. These requirements are defined and described in this section.

Power Plant Operation on a Utility Network

The operating environment of a power generating plant is characterized by:

- Fluctuating and changing levels of connected load, aggravated by unusual loads or weather.
- Changing power plant status, both planned and unplanned, resulting in varying levels of available generation.
- Network disturbances due to unplanned loss of generation or change in network configuration due to line switching.
- Necessity to over- or under-generate to correct system time or adjust for inadvertent energy exchange on the lines.

Load changes which are random, i.e., small in magnitude and occurring over relatively short time intervals, cause small deviations in generation load balance and result in small frequency deviations (from +0.02 Hz to -0.04 Hz in the United States). Hence one requirement for plant response is the necessity of frequency regulation.

Over longer time spans (i.e., days, weeks, years), variation in load occurs within larger tolerance; this variation is predictable as a function of time of day, day of week, and time of year. The necessity to maintain a match of generation with load over these larger variations requires that at least some plants have load-following capability.

The variability in connected load, together with the economics of plant and system operation, create the need to take units fully out of service, either daily or for more extended periods. Maintenance of the plant also creates a need to shut down and start up plants on a planned basis. Hence plant characteristics in startup and shutdown are an important operating consideration.

A mild emergency in a power system results from the unexpected loss of generation within a control area. The sudden in-flow of power over tie-lines from adjacent control areas may exceed the thermal capacity of transmission line conductors. A small drop in frequency on the entire interconnection also results. To restore the tie-line loadings to normal and eliminate the

frequency deviation, the remaining generation in the area must be increased by the amount lost. Industry standard practices specify that this shall be accomplished within ten minutes, and, in most utilities, this additional power must be provided by units already synchronized to the system. This requirement is referred to as tie-line backup.

Major system emergencies may result in a loss of all ties to the remainder of the power system, leading to the isolation of a part of the system, i.e., the formation of an island. The isolated segment may be generation-rich (with a rise in frequency and a need to reduce generation) or generation-deficient (with a need for an increase in generation, load shedding, or a combination to restore frequency and permit resynchronization with the interconnection).

A special case of islanding is the sudden disconnection of a unit or plant from the rest of the system, leaving the unit with no connected load. Referred to as load rejection, the unit is usually shut down by its overspeed protection. However, it is desirable (where possible) to cut back on unit power output to the level of the plant auxiliaries' load. It is usually desirable to resynchronize and reload the unit as quickly as possible if the load rejection has been caused by a malfunction external to the plant.

Desirable Plant Response Characteristics

Operation of an interconnected power system places certain control and maneuverability requirements on the aggregate generation in the interconnection; these requirements must be imposed ultimately on the individual units. Since individual units vary in their relative ability to maneuver and play different roles in the overall economics of day-to-day operation, it is not possible to unequivocally define absolute response requirements. However, there are some general guidelines which can be used in the design of power plants for use on electric utility networks.

General guidelines which are desirable objectives in the design of a new plant concept are:

1. Each generating unit and its controls should be inherently stable under all combinations of possible manual and automatic control while connected to the system. That is, under no circumstances should the stable operation of any unit depend on the characteristics of other units.

2. It is highly desirable that each unit, if called upon, be able to assume its proportionate share of load regulating and/or frequency regulating duty.

3. Generating unit controls, in responding to external stimuli (such as frequency deviation or automatic generation control signals), should not impose on the unit an excursion which would cause the unit to lose control or to trip off the line. That is, control

action should be limited to the amount of control to which the unit can respond without exceeding limits on process variables (such as water level, pressures, or temperatures).

Based on these guidelines, it is possible to specify quantitative goals for the control of individual generating units from an analysis of the aggregate system needs. The aggregate system needs are quantified below and the resulting requirements for response of individual units are stated.

Frequency regulation. The requirements for frequency regulation are essentially those for speed governing of the prime mover. They are defined in industry standards and may be summarized as follows:

1. A prompt stable response in change of power output of +1.3 percent or -0.7 percent of MW rating, with at least 30 percent of total change within the first two seconds.

2. A maximum deadband of 0.06 percent frequency (0.036 Hz on a 60 Hz system).

3. A steady-state regulation of 5 percent (i.e., 20 percent change in power output for each 1 percent decrease in frequency).

These specifications apply only to the speed control and assume that the energy supply is capable of meeting the demands made upon it as defined above. In plants where the energy supply is complex, the overall plant control will respond to frequency deviation and will exercise a coordinated control over both prime mover and energy supply to meet the speed/load demand.

Load following. For those generating units called upon to adjust output to follow long term load variations, a typical expectation is the ability to go from 100 percent power to 50 percent power at rates of 1 percent to 2 percent per minute over much of this range, and to make the total excursion over a 2 hour period and return in the same elapsed time. Peaking units (normally combustion turbines) are expected to load and unload over a range of 70 percent of rating in periods of 10 to 20 minutes.

Tie-line backup. Increase in generation for tie-line backup is generally provided for spinning reserve (units already synchronized to the system). The one to two percent per minute response rate cited for load-following duty is generally adequate for tie-line backup.

Startup-Shutdown of Plant. Just as different requirements for load following exist for different types of units, there is a distinction made for startup and shutdown rates. Peaking units, most likely combustion turbines, are often used for non-spinning reserve to meet unexpected sudden load increases; as such, these units should be capable of start-to-full load in 30 minutes or less. For intermediate range steam units, start-to-full load in one to two hours is desirable. Base load units could take from two to four hours for a start following a brief shutdown and six to ten

hours following a more extended shutdown. Shutdown rates comparable to startup rates would be permissible.

A plot of response rate in percent MW/minute vs. the number of minutes at which this rate can be sustained, plotted on log-log coordinates contributes to comprehension of the data above. Figure 14-3 illustrates the transition from excursion-limited response to rate limits over the range of normal operation conditions. Typical system emergency requirements are also shown.

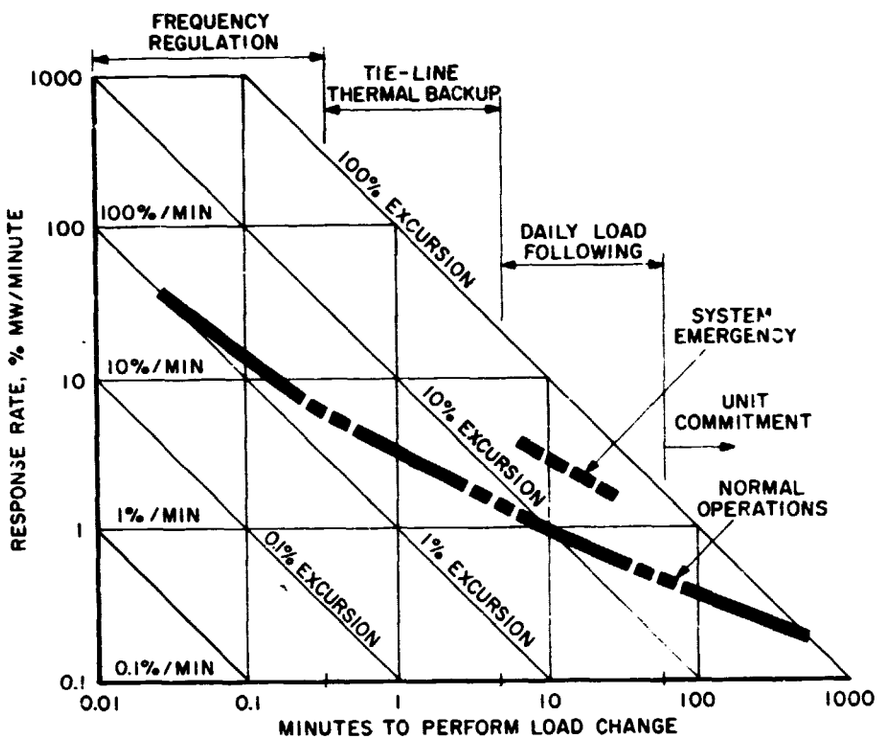

Figure 14-3. Maneuvering Requirements of Generating Units for Utility System Operation

Operation of the SPS System

It is probable that the SPS system will operate at or near full output as a base load plant with a minimum of need for load following. However, as the penetration of SPS on a power system increases some or all of the SPS plants would be required to have some load following flexibility.

The response characteristics of the SPS system and its impact on utility system operations are examined in Section 4.1 .

2.2 Utility System Reliability/Availability Characteristics

Historically, utility system planners measured generation system reliability with a percent reserve index. This planning criterion simply measured the ratio of total installed generating capacity to the annual peak load demand. However, this approach proved to be a relatively insensitive indicator of system reliability, particularily when comparing alternative units whose size and forced outage rate vary.

Today, reliability of electric utility systems is commonly measured by using probability mathematics. The most prevalent method is called the "loss-of-load-probability" (LOLP) method. LOLP calculations are relatively simple to perform using digital computers and allows different generation expansions to be designed and compared on the basis of a common level of reliability.

Generation system reliability is affected by several factors. Among these factors are unit size, forced outage rate and planned outage rate. Although LOLP is concerned with the systems ability to meet the demand, utility system reliability is the net result of the individual generating units and their reliability.

The LOLP calculation is performed by utilizing a chronological daily peak load forecast including measures of load forecasting uncertainty. Each generating unit is represented by its rating, probability of outage and its maintenance requirements. Conventional generating units are typically represented by a two-state reliability model. The two states are full output and no output, respectively, and the probability of full outage is defined according to the Edison Electric Institute (EEI):

$$\text{Forced Outage Rate (FOR)} = \frac{\text{Service Hours}}{\text{Service Hours + Forced Outage Hours}} \text{ p.u.}$$

The only conventional generating unit where a multi-state reliability model is normally required is a combined cycle unit made up from several gas and steam turbine units. The combined cycle unit therefore, has the capability of producing power while parts of the plant are down for maintenance. Typically a five-state model has been found sufficient to approximate the reliability model for a combined cycle unit.

The maintenance requirement is measured by a planned outage rate equal to the ratio of scheduled maintenance hours and the 8760 hours of the year. Since scheduled maintenance is a deterministic quantity, it is common practice to attempt to plan each individual generating unit's maintenance schedule in order to minimize the annual LOLP. This would result in scheduling of maintenance for the largest units on the system during low load periods of the year. As the number of large units on a system increases it is conceivable that additional reserve capacity would be needed due to some of the large units being scheduled down during periods of high risk.

3.0 INVERTER CONTROL AND OPERATION

3.1 Power Conditioning System

The power conditioning system that has previously been recommended for the SPS is the current fed, line commutated inverter. This type of system is in common use in High Voltage Direct Current Power Transmission. The largest system presently in use supplies 3.4 GW to the Winnepeg area in Canada. A larger system supplying 6.3 GW is to be built in Brazil. Each of these large systems employs 8 inverter circuits feeding in parallel into the ac systems. Although the individual converters are much larger and operate at much higher dc side voltage than the converters for an SPS system, they are quite similar in function and are completely compatible with the ac utility systems.

These HVDC systems employ synchronous condensers for the same purpose as those recommended for the SPS system, namely the control of ac voltage and the supply of reactive power. Filters are employed to absorb the harmonic currents generated by the converters. The dc load presented to the rectenna assembly by such a converter is under control of electronic circuits. On the ac side the converter appears as a constant current negative load which has proved to be completely compatible with the ac system.

3.2 Steady-State Control Mode

It has been recommended that the SPS should operate at full available output. In order to do this, the power conditioning unit must present to the rectenna the optimum load impedance. For a conventional antenna, this impedance is usually resistive in nature and is unique to the design of that antenna. It is assumed that the rectenna is basically no different and that there is an optimum dc load resistance for maximum power transfer. This is shown graphically in Figure 14-4 .

The current fed, line commutated inverter is controllable in a constant resistance mode as shown in Figure 14-5 . The dc voltage of the rectenna unit is sensed and divided by the current that is flowing and the resultant resistance value is compared to a reference. The difference between reference and measured resistance is an error signal which is fed to the firing angle control of the inverter. The load impedance reference can be adjusted for maximum power out of the rectenna. This adjustment should be independent of load level, as suggested in Figure 14-4 .

Normally the system would be operated at optimum resistance so that the rectenna would reflect a minimum of power. The power level would be adjusted at the satellite as indicated in the block diagram and would usually be set at maximum available power. If power reduction should be required by overall utility considerations and it could not be accomplished at the satellite, the converter power is readily adjusted by means of the impedance reference input. Of course, RF power would be reradiated but that might be acceptable under the circumstances.

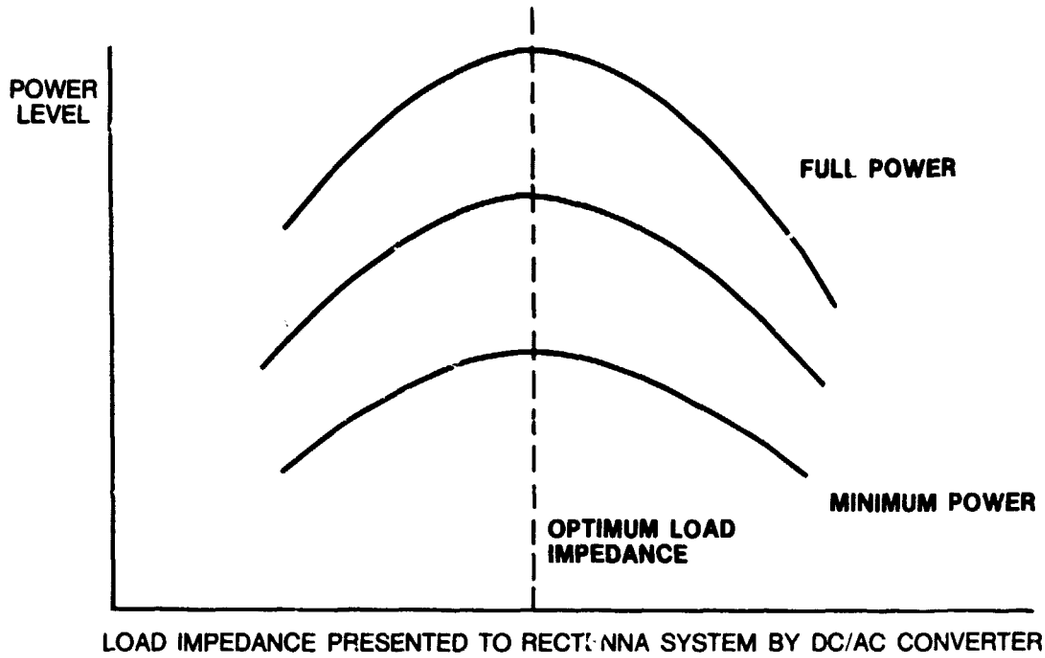

Figure 14-4. Assumed Characteristic Curves of Rectenna System Power Out vs. Load Impedance for Several Constant Levels of Radiation

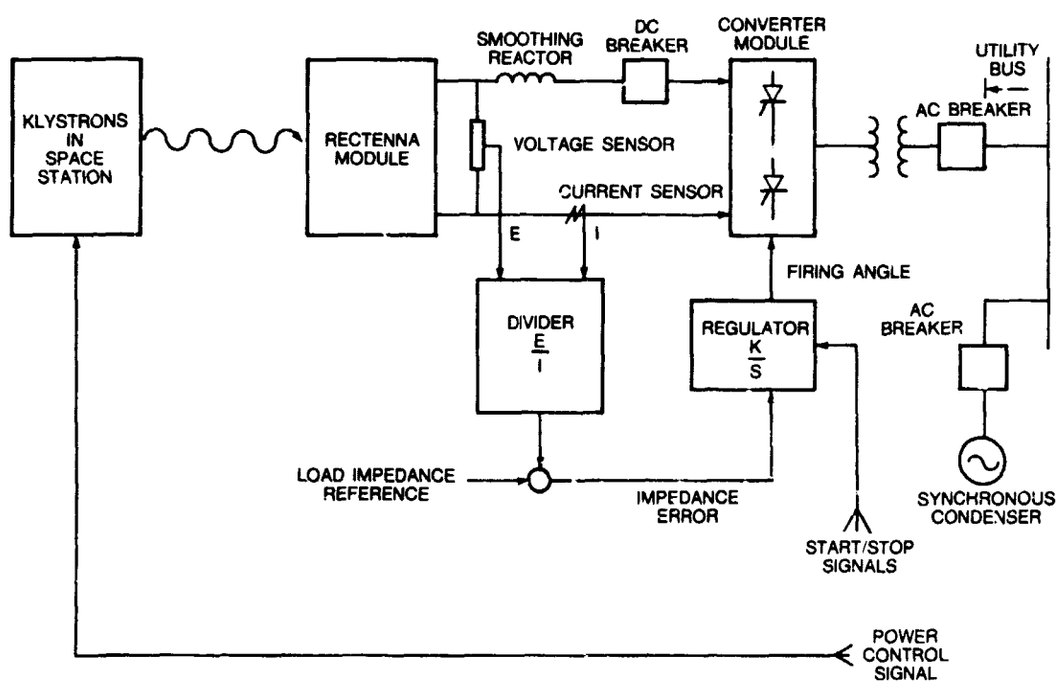

Figure 14-5. Satellite/Rectenna/Utility Control Scheme

The converter module requires reactive power from the ac bus in approximate proportion to the active power being delivered to the utility network. This reactive power is supplied by static capacitors, harmonic filters and synchronous condensers as indicated in the block diagram. Such compensation is state-of-the-art in HVDC power transmission.

3.3 Normal Startup/Shutdown

Synchronous Condenser Start. Synchronous condensers, being large machines, require a starting procedure. If ac power from the transmission line is available, the condensers are started automatically using static frequency changing equipment. Auxiliary power, such as diesel engines, can be supplied for starting in the event that ac power is not available. In any case, when the machines are up to speed they are connected to the ac system by means of their circuit breakers. If the ac system was previously energized, the synchronous condensers must be synchronized before breakers are closed. This is a state-of-the-art automatic process.

Set RF Power to Start Level. The RF power should be set to a start level by one of the means at hand. It matters not to the converters how this is accomplished.

Sequential Energization of Converter Modules. The converter modules will be energized automatically according to a predetermined pattern. The rate at which they are energized will be determined by the capability of the ac system to absorb the generation without overspeed. The individual energization sequences will begin with closing of the ac breaker and will end with operation at maximum available power. The individual sequences will be controlled by computer subroutines.

Increase of Power to Desired Level. When all converter modules have been energized and are operating at maximum available power level or some other level as directed by the central dispatch system, the RF power can be increased to the desired operating level by any of the means available.

Normal Stop. Any converter module can be de-energized by opening its dc circuit breaker. This should be accompanied by a short circuiting or crowbar action at the rectenna. It is understood that such action is to be provided on an automatic basis.

If the whole SPS is to be shut down, ac system considerations will dictate that it be done gradually. This could be done by sequential and spaced shutdown of the modules from their operating level or first by reduction of RF level and then by module shutdown at a more rapid rate. In any case the final condition will be that the synchronous condensers and filters alone are connected to the ac system.

3.4 Operation During Faults or Eclipse

Faults can be divided into three categories: RF-rectenna faults, dc collection and converter faults, and ac system faults.

Faults in the satellite systems will result in decreased RF power level which will be reflected in decreased ac output of the converter. There will be no other disturbance. When RF level is restored the converters will automatically respond.

For best protection the dc breaker will be located as close as possible to the rectenna. Any fault in the dc bus work between the dc breaker and the converter or in the converter itself will result in tripping of the dc breaker. This will cause the rectenna system to crowbar itself. The converter will be arranged so that its ac breakers are opened as a result of any such dc fault. These dc faults result in permanent shutdown of the module pending determination of cause of fault and manual reset and restart.

An ac system fault, usually from lightning flashover somewhere in the ac system, will sometimes result in a temporary inverter functional disorder, known as a commutation failure. The inverter appears as a temporary short circuit to the dc source with complete loss of power to the ac system. These commutation failures are temporary in nature and do not involve any arcing or current in other than normal paths. Automatic sequences will restore the converter to normal operating conditions when the fault has been cleared.

Semi-Annual Eclipse. Performance during the semi-annual eclipse periods can be made largely automatic. As RF power decreases during the partial eclipse period the converter, through its constant resistance load characteristics, will track the rectenna output and provide available power. Before totality occurs it will probably be advisable to go through a normal shutdown sequence. As available power level again increases, restart sequences can be initiated with power level returning to normal automatically.

The principle problem during these eclipse periods will be power dispatch in the ac system to preserve load and frequency. A mitigating factor will be that the power loss occurs at night when the ac system is most able to cope with it.

4.0 SPS/UTILITY SYSTEM INTEGRATION

4.1 SPS Operating Characteristics

Section 2.0 discussed the generating plant response characteristics necessary to meet the operating requirements of a utility system. The power control methods for the SPS, defined in Section 1.0, were examined in relationship to the desired response, and in terms of impact on SPS operations. Two were deemed both practicable and acceptable by these criteria. They were: method 2, the introduction of a quadratic phase error to the antenna

aperature; and method 4, the tilt of the antenna phase. Both provide a satisfactory range of power control and an acceptable time response.

For comparison with the response of current generating plants, the SPS response for both methods has been plotted on Figure 14-3. This is reproduced in Figure 14-6. It is seen that the SPS response, for either method of power control, is better than that for conventional generation. No evaluation has been made of other environmental impacts from either of these two control modes.

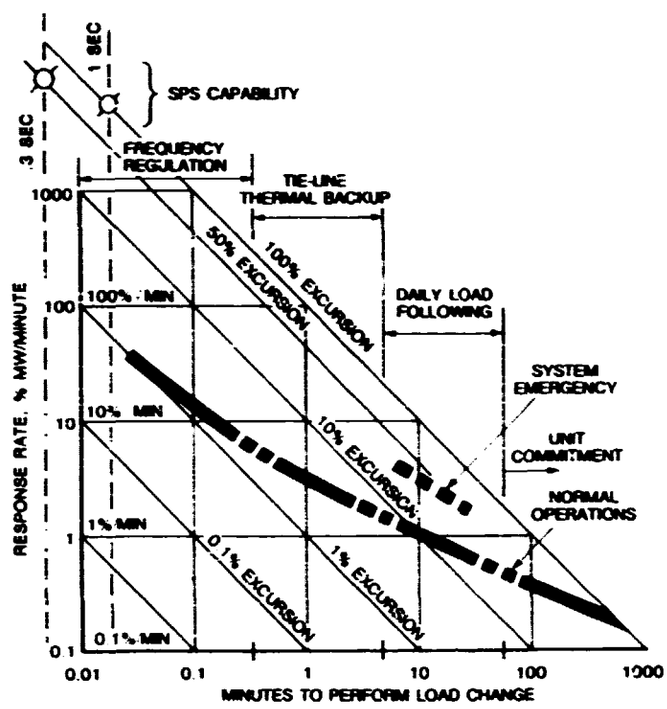

Figure 14-6. SPS Capability Compared with Maneuvering Requirements of Conventional Generating Units for Utility System Operation

4.2 Utility System Integration

SPS Impact on System Design and Integration. Power generating units, when connected into a large power system, become an integral part of that system and are affected by a number of conditions and controlling influences to which they would not be subject if they were simply serving an isolated load. The SPS system will be similarly affected when connected to a utility system.

A power system never operates at a point of true steady state and thus is always characterized by dynamic behavior. This has a primary impact on the operation and design of controls for both generation and system. Whenever a change in operating condition or a disturbing event occurs on a power system, there is a nearly instantaneous change in the state of the electric and magnetic fields of the system, followed in seconds and minutes by the longer term electromechanical response of the rotating elements of generating sources and loads.

It has already been shown (Section 3.0) that the SPS is unlike conventional generation in that it has no mechanical inertia and hence appears as a negative load to the system. Furthermore, the rectenna-inverter control proposed will act to transmit to the utility system all the power incident on the rectenna. Control of the incident power will be at the satellite antenna via the space communications link as indicated in Figure 14-5. This control loop, involving transmission of control signals through space, is the nearest analog of governor control of a conventional generation source.

It is assumed that the SPS system will be operated at the maximum level of available power most of the time. In the baseline design, there is no control of power level responsive to frequency variation and therefore the SPS will not contribute to the regulation of system frequency. It should be pointed out that additional control functions could be included to provide that contribution, either by control of the antenna in space, or of the rectenna-inverter combination on the ground, to vary power output. This would require operation at a power level ~1-2% below maximum available in order to provide a margin for increased power with decreasing frequency. Either approach results in increased radiation around the rectenna, from either the broadened beam width or from reradiation at the ground. If this is acceptable, it should be considered. Without contribution by the SPS to frequency regulation, additional duty will be imposed on the other generating units on the utility system, with a corresponding requirement for even higher response from those units. In either event, it appears that the other units on the network must have the capability to respond to load following requirements and provide the capacity for tie-line backup.

Finally, the operating characteristics of the SPS system, especially the control of output power from the rectenna, require a high reliability of transmission connections to the load areas. Utilities will have to perform more extensive transmission planning studies, and provide increased transmission facilities to ensure the integrity of power absorption from the SPS.

SPS/Utility System Interface and Power Transfer. The interface between the SPS as a source of generation and the utility system is uniquely different from conventional generating plants because of the absence of a prime mover. This will become more apparent through the following simplified analysis.

In the analysis of ac electrical system, the angular relationships or phase angles among the voltages and currents are required. The use of phasors for graphical representation assists in understanding the analysis.

Consider the simple ac circuit in Figure 14-7, (A), with the relationship between the two voltages and the current expressed in the adjacent phasor equation below. If $\tilde{E}_1 = \tilde{E}_2$ (magnitude equal and coincident in phase) no current will flow ($\tilde{I}_L = 0$) and the equation is satisfied.

If $|\tilde{E}_1| > |\tilde{E}_2|$ (magnitudes different but still coincident in phase, as shown in Figure 14-7 (B), a current I_L will flow through the reactance X_L. The phase angle of $\tilde{I}_L$ will lag the voltage drop across the reactance $X_L(\tilde{E}_1 - \tilde{E}_2)$ by 90°. Note that with current and voltage in quadrature, no real power flows, only reactive power or Vars.

To transfer real power (Watts) across the reactance requires an angular difference between the voltages $\tilde{E}_1$ and $\tilde{E}_2$ as shown in Figure 14-7 (C). Now the current I_L has a component in phase with the voltage and there is real power flow.

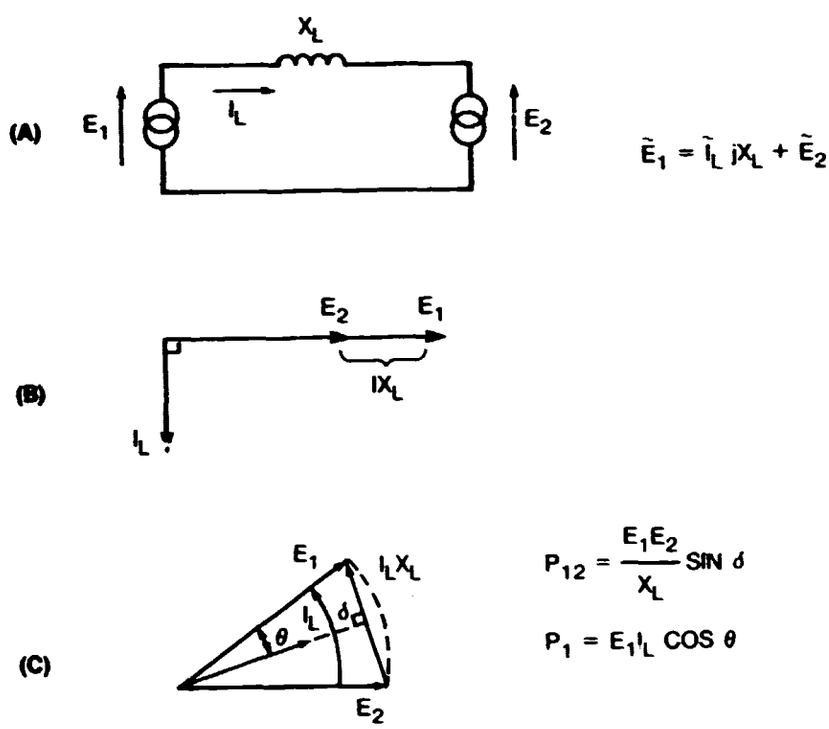

Figure 14-7. Graphical Representation of Alternating Current Quantities

The interface between the SPS ground system and an electric utility may be represented by the simple one-line diagram of Figure 14-8 (A). Power is transmitted across a transmission line to the system which is represented by an infinite bus. The synchronous condenser is operated with a field regulator to control the voltage on its bus and therefore the flow of reactive power, Q, (Vars) in the system.

For a particular real power flow, determined by the inverter firing angle control, the relationships among the voltages and currents is illustrated by the phasor diagram of Figure 14-8 (B). This is a graphical presentation of the phasor equations above.

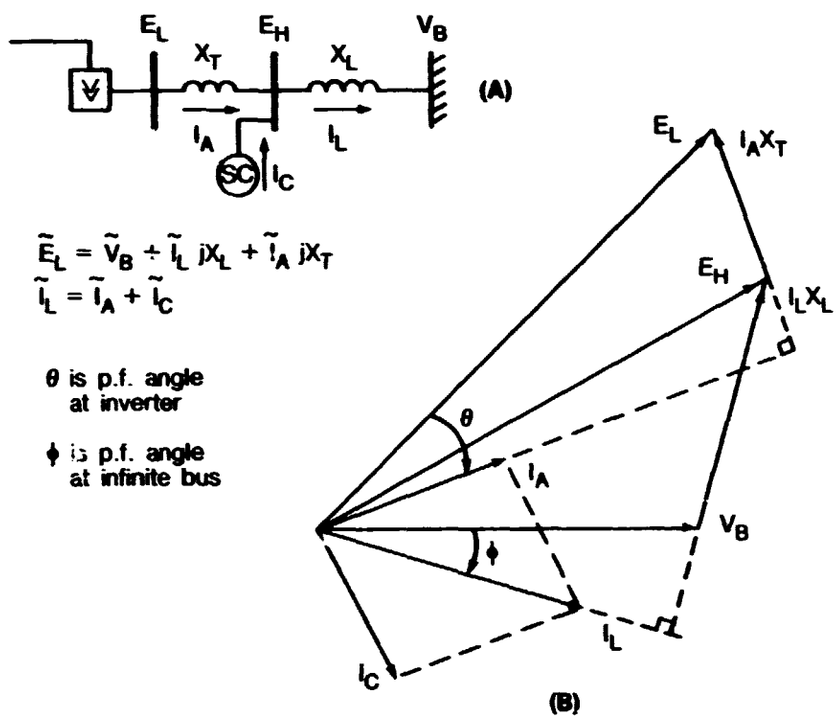

Figure 14-8. SPS/Utility System Interface Simplified Analysis

If the energy capture by the rectenna increases, the inverter will be controlled to transfer greater power to the utility system over the transmission tie. An increase in the ac current from the inverter, I_A, causes changes in the magnitudes and angular relationships of currents and voltages (except where constrained). This is shown in the new phasor diagram of Figure 14-9, here superimposed on the prior diagram from Figure 14-8.

(Note that the magnitude and phase of an infinite bus are fixed and that the synchronous condenser bus voltage is unchanged in magnitude.)

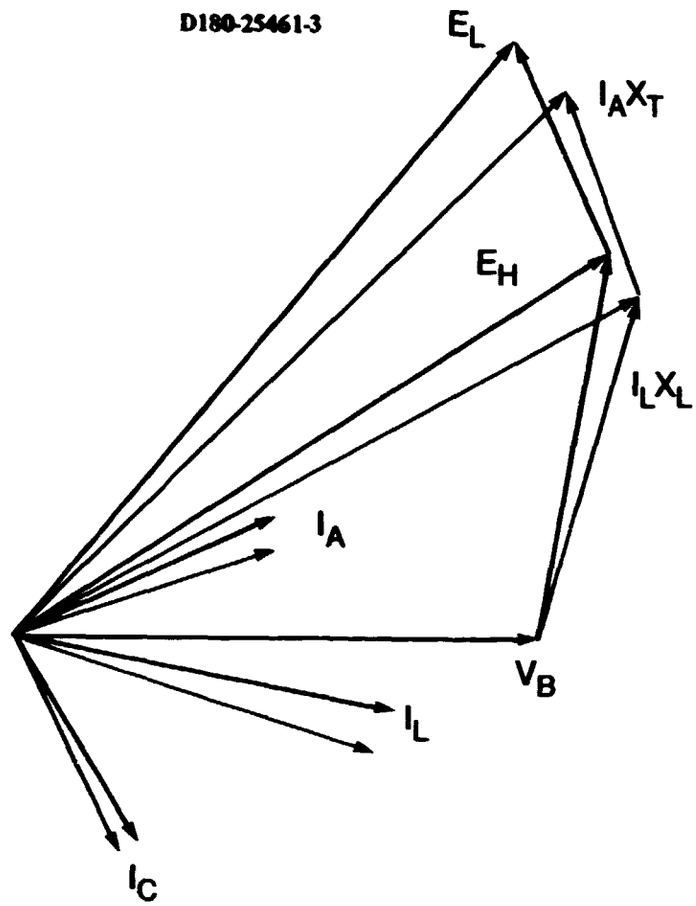

Figure 14-9. Effect of SPS Power Output Variations

Notice also that there is no change in mechanical power level involved here; there are no finite rotating masses to accelerate or decelerate. The change is solely an electromagnetic transient measured in milliseconds; hence the characterization of an SPS as a negative load on the utility system.

Utility System Controls. Individual utilities have found it advantageous to interconnect their systems by means of transmission tie lines. This provides flexibility in terms of sharing generation capacities and increased reliability of operation. When this is done, those systems which form an interconnection will be locked in synchronism, and, aside from occasional short-lived local oscillations, the frequency will everywhere be the same.

Multiple control areas within an interconnection are operated to continually control generation to meet loads and regulate the flow of power across the tie lines into or out of adjacent control areas. The geographic boundaries of control areas usually follow corporate lines.

Automatic Generation Control (AGC) with the Economic Dispatch function shown schematically in Figure 14-10 is used to augment the system operator's capabilities to assure satisfactory operation of the power system in each control area. AGC acts to regulate the power output of the electric generators within the control area in response to system frequency and tie-line power flows so as to maintain the scheduled system frequency, and the established net power interchanges within prescribed limits.

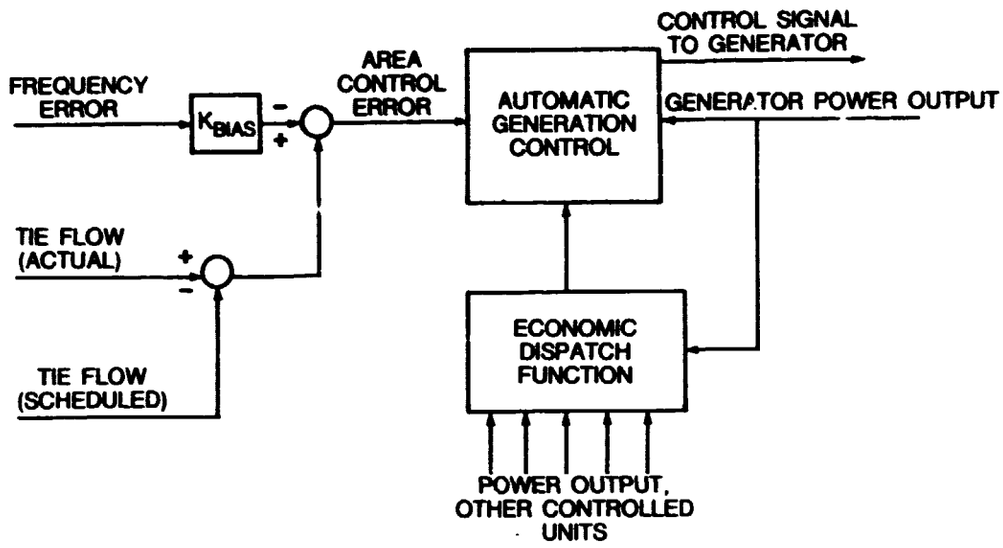

Figure 14-10. Automatic Generation Control (AGC)

The economic dispatch function acts through the AGC function to adjust the output levels of individual generating units to achieve maximum economy of system operation, taking into account the cost of unit operation, transmission system losses, and current operating constraints.

The action of AGC is illustrated in Figure 14-11 by simulation in a hypothetical utility control area of 4 GW generation capacity. 1.25 GW in group A which is controlled by the AGC; 2.75 GW in group B with no AGC.

At time equals zero, load is increased by 50 MW (or 50 MW of generation is lost). The line flow from adjacent area 2 into area 1 increases to almost 50 MW. System frequency dips due to a generation deficiency and governor action on both groups of generators resulting in an increase in power output, which together with the tie flow, supplies the load demand.

AGC action (on unit group A only) raises its output over a 5 minute period to restore the tie flow to zero, and the system frequency to 60 Hz. Note that unit group B, not under AGC, returns to its original output level with the restoration of system frequency.

If group B was a solar power satellite, its output would be totally unaffected by this sequence of events. This would result in an initial tie-line flow of 50 MW, hence increased regulating duty on the units in group A.

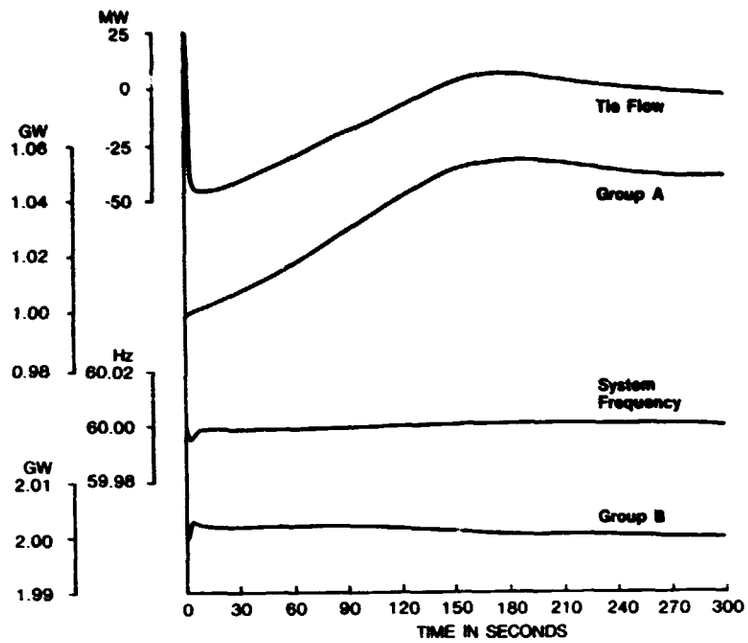

Figure 14-11. Illustration of AGC Action

Generating plants in a utility network are operated under the direction of a company dispatcher, who in most instances is provided direction from a power pool center, and with the assistance of an Automatic Generation Control System.

Telemetering of power flows and voltages provides system dispatchers and pool operators a current picture of conditions on the network. As loads and power flows change, generating levels are changed to maintain system frequency, load generating units within ratings and according to most favorable economic considerations, and limit line flows to meet rating or stability considerations.

The Solar Power Satellite, representing a significant block of generation in any operating utility or power pool, would be under the direction of such operations, as shown in Figure 14-12.

It is estimated that there will be 12 operators and 50 maintenance people on duty at all times. This results in a total of 333 (108 operators and 225 maintenance) people at each rectenna site. It is also estimated that there will be 165 people required in the Rectenna/Ground Operations group, and 240 people in the SPS Operations group when there are twenty satellites operational.

REPRODUCIBILITY OF THE ORIGINAL PAGE IS POOR

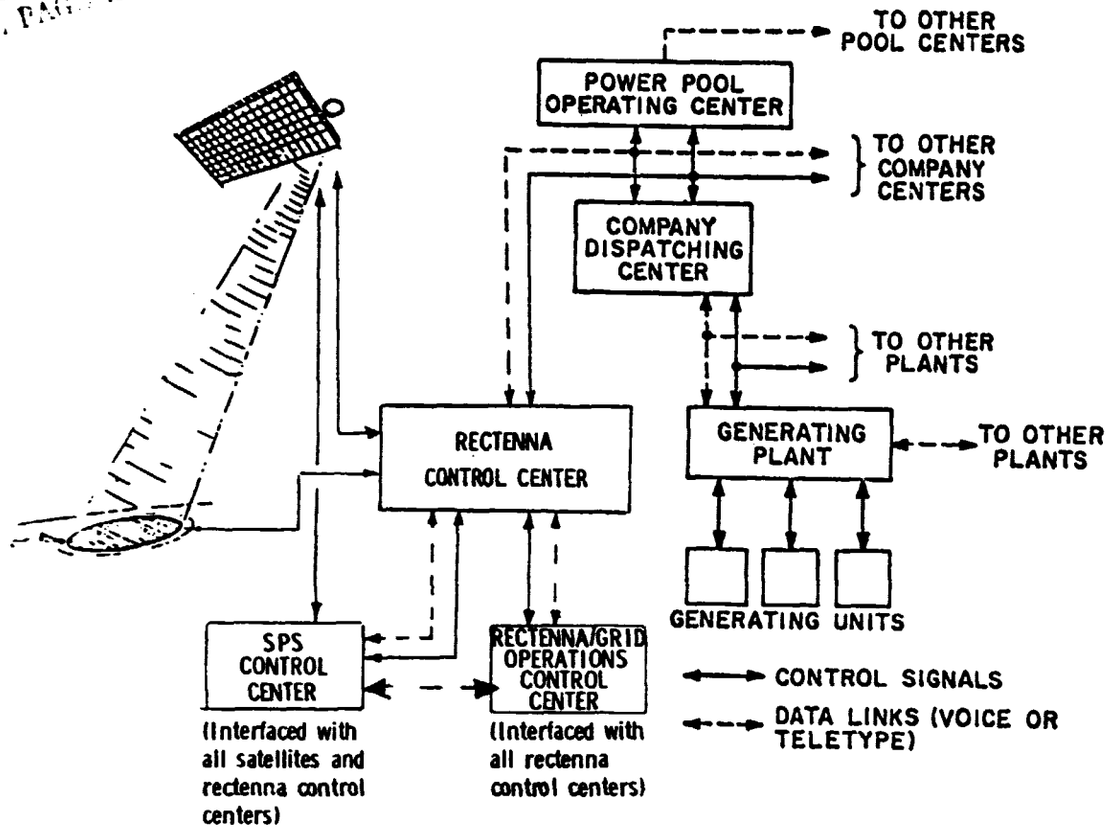

Figure 14-12. Utility System Control Structure

4.3 SPS/Rectenna/Utility System Reliability Impacts

In order to study the impact of adding SPS generation to utility systems in the future, several assumptions had to be made.

The first assumption is to use the probability of available power curves from the SPS system developed in Phase I as the starting point for the utility investigations. The curves developed in Phase I are shown in Figure 14-13, and the circles marked indicate the "break points" for adapting the curve to available utility models.

The second assumption is that it is reasonable to use a 5-state representation to study the SPS impacts on utility system reliability. These curves are too complex to be used directly in current electric utility system reliability computer models. The approach chosen was to utilize the existing five-state model discussed in 2.2. Then using the model in a parametric sensitivity approach to determine the impact of SPS power on utility system reliability for various SPS penetration levels.

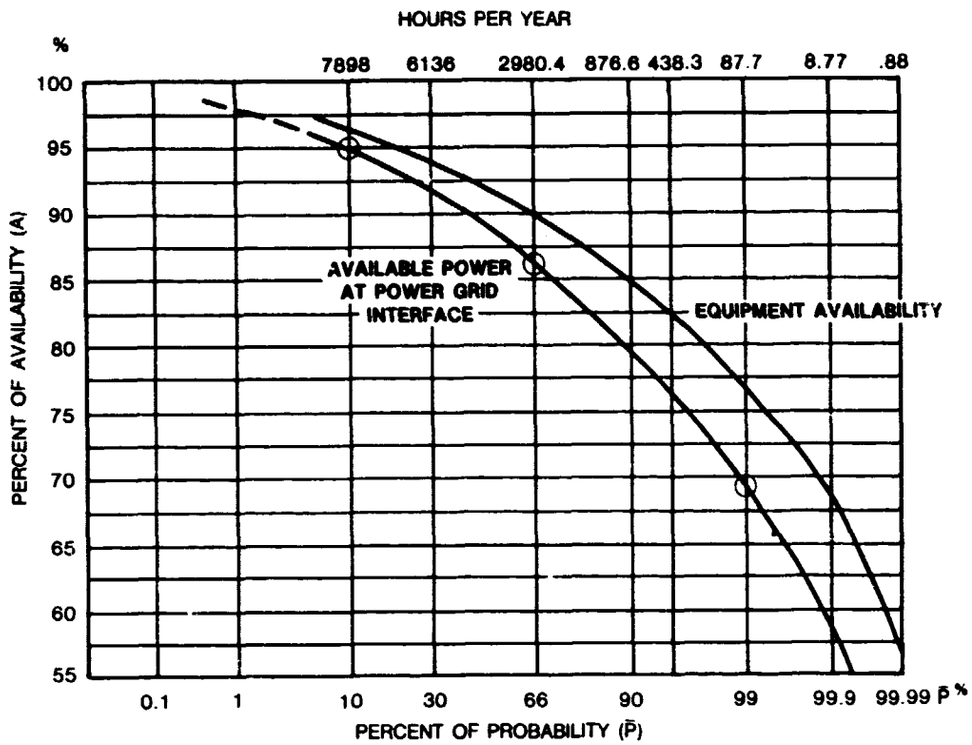

Figure 14-13. Utility System Reliability
SPS Reliability Model

To be able to relate to utility system size a study was made of the growth projections found in reports from the various National Electric Reliability Council (NERC) Regions. A map indicating NERC Region boundaries is shown in Figure 14-14. Table 14-14 shows in the first column the 1998 capacity forecast in each region. By using the growth projections from 1989-1998 the second column was calculated as a year 2020 guesstimate. The last column indicates as a benchmark how many SPS rectennas would be in each region with a 20% penetration.

To study the SPS reliability impact, the smallest region size in year 2020 was chosen, and Table 14-5 shows the assumed generation mix in the study system. It should be noted that this mix is not relating to the MAAC projections for the future. The mix would be more indicative of an average US mix. The forced outage rates shown are assumed to be for mature units and are representative of today's technology levels.

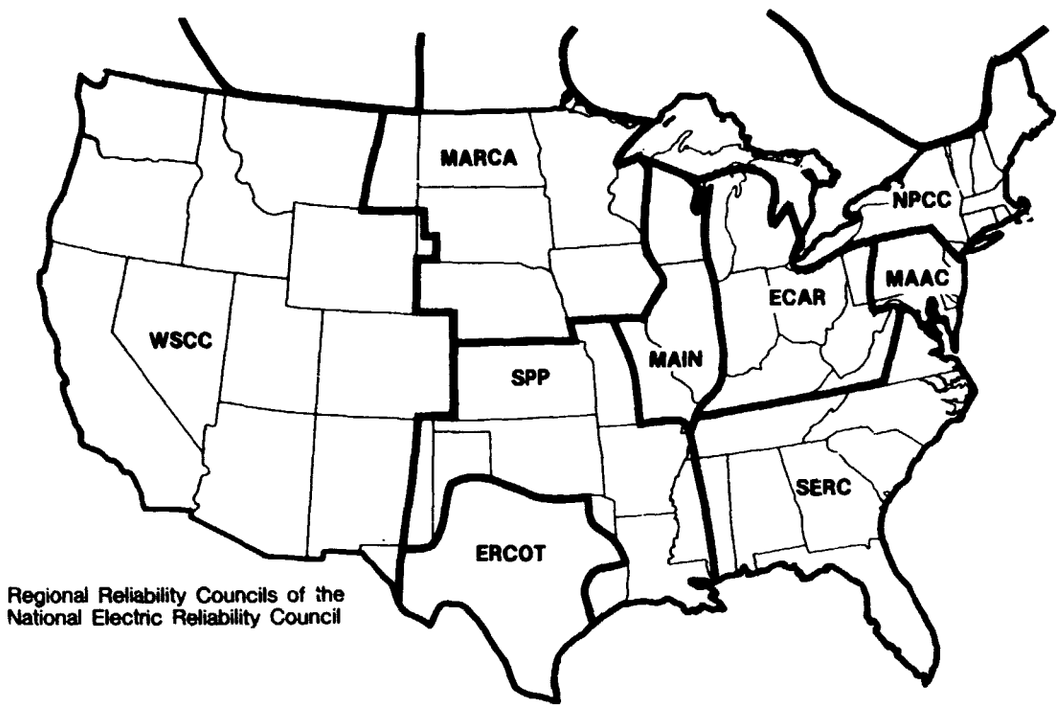

Figure 14-14. U.S. National Network

Table 14-4

NATIONAL ELECTRIC RELIABILITY COUNCIL

Forecast of Bulk Power System Capabilities

	1998 Forecast GW	2020 "Guesstimate" GW	Number of Satellites @ 20% Penetration
Northeast (NPCC) (W)	83	130	5
Southeast (SERC) (W)	258	550	22
Southwest (SPP)	138	380	16
East Central (ECAR) (W)	194	365	14
Mid Atlantic (MAAC)	69	100	4
Mid America (MAIN)	94	210	8
Mid Continent (MARCA)	55	125	5
Texas (ERCOT)	87	200	8
Western (WSCC)	222	440	18
TOTAL	1200	2500	100

(W) - Winter Peak

Table 14-5

SAMPLE ELECTRIC UTILITY SYSTEM

# Units	Generation Type	MW Size/Unit	Forced Outage Rate	Total MW
100	Peaking	100	.05	10,000
20	Hydro	500	.01	10,000
20	Mid-Range	500	.04	10,000
45	Base Fossil	1000	.13	45,000
25	Base Nuclear	1000	.09	25,000
			Total System	100,000

The 5-state reliability model for the SPS based on Figure 14-13 is shown in Table 14-6 . This model may be regarded as the most optimistic interpretation of Figure 14-13, and gives an impact on the utility system reliability as shown in Figure 14-15 marked "Mid-Term". To evaluate the SPS reliability model on a parametric basis the data in Table 14-7 was developed. The first line in the table shows the Table 14-6 values and the rest of Table 14-7 shows a more conservative approach to modelling Figure 14-13. This is particularly true in the areas of full outage.

Table 14-6

UTILITY SYSTEM RELIABILITY

SPS Reliability Model
5-State Representation

MW on Outage	Probability of MW Out
0	0.1
250	0.56
610	0.33
1440	0.01
5000	0

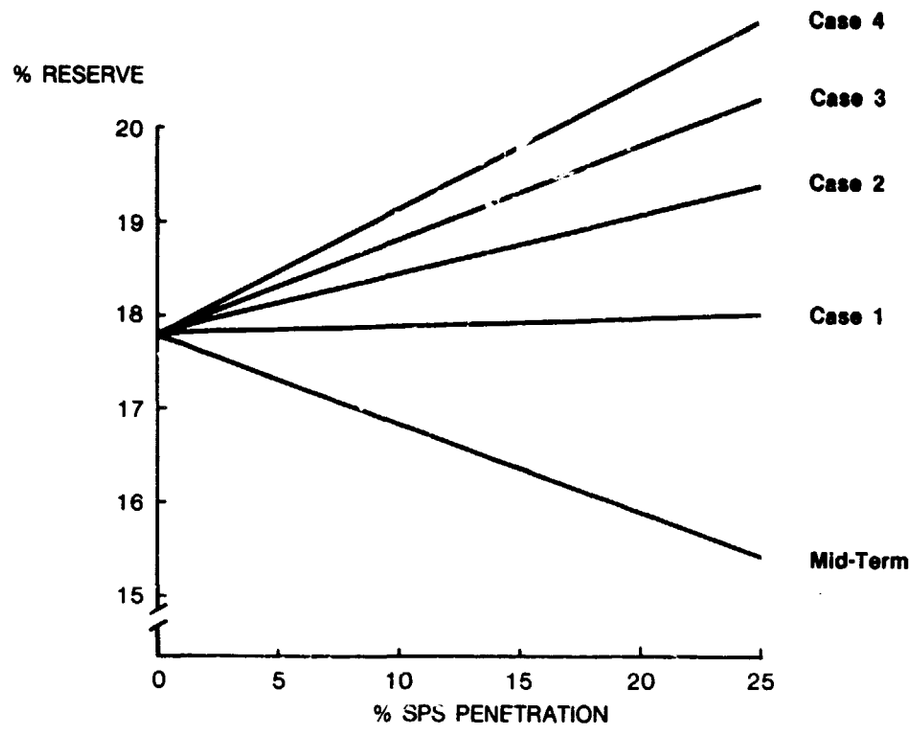

Figure 14-15 . Utility System Reserve Levels vs. SPS Penetration

Table 14-7

SPS RELIABILITY MODEL

Case #	MW Out → / P(MW Out) ↓	5000	1500	700	200	0
Mid-Term		0	.01	.33	.56	.1
Case 1		0	.30	.40	.20	.1
Case 2		0.01	.29	.40	.20	.1
Case 3		0.02	.28	.40	.20	.1
Case 4		0.03	.27	.40	.20	.1

The results of the study of Case 1 through Case 4 are also shown in Figure 14-15 .

It is obvious that the estimates for the probability of full outage will have the most effect on the utility system reserve levels. With only a modest estimate of 1% probability of 5000 MW out will cause a deterioration of utility system reliability as indicated by increasing reserve levels with penetration.

There are several causes for power outages not explicitly included in Figure 14-13 and further work should be performed in the area of utility system reliability impacts as the SPS design and operational characteristics are further refined and developed.

4.4 SPS/Rectenna/Utility System Maintenance Impacts

As mentioned in paragraph 2.2, generating unit maintenance is performed in an attempt to match the available maintenance personnel with the need for leveling risk (LOLP). Since the SPS output will be affected by the eclipse period in March and September, one first approximation would be to attempt to maintain all the SPS power plants during these two months. To investigate if this would be feasible from a utility system point of view, the NERC Regional data was used as a study base. Table 14-8 shows the monthly peak loads in September and March as a percentage of the yearly peak loads. By examining the data, September appears to be of a greater concern than March.

Table 14-8

SPS SCHEDULED MAINTENANCE

March and September Peak Load in
Percent of Annual Peak Load

	March	September
Northeast (NPCC)	85.4	90.7
Southeast (SERC)	84.1	94.6
Southwest (SPP)	62.8	93.3
East Central (ECAR)	89.7	93.4
Mid Atlantic (MAAC)	78.2	90.2
Mid America (MAIN)	70.6	89.3
Mid Continent (MARCA)	75.8	84.9
Texas (ERCOT)	63.0	94.5
Western (WSCC)	88.2	96.3

Table 14-9 indicates the margins between maximum available generation with all SPS (25% penetration) on maintenance. In all but a few regions, September has negative margins while March indicates no particular trouble. If feasible from a space maintenance point of view, March would be acceptable and September would need extra reserve installed to take all SPS down on maintenance. One additional thing to keep in mind is that maintaining all SPS in these two months would force all other generation maintenance into the remaining ten months.

Table 14-9

SPS SCHEDULED MAINTENANCE

Impact on Reserve Levels from SPS
Shutdown in March and September

	"Maximum Peak"	Margin March	Margin September
Northeast	90.5	5.1	-0.2
Southeast	90.5	6.4	-4.1
Southwest	90.5	27.7	-2.8
East Central	90.5	0.8	-2.9
Mid Atlantic	90.5	12.3	0.3
Mid America	90.5	19.9	1.2
Mid Continent	90.5	14.7	5.6
Texas	90.5	27.5	-4.0
Western	90.5	2.3	-5.8

Assumptions: 25% SPS Penetration

15.5% Generation Reserve

The variation of monthly peak loads may also vary significantly from one utility to the next. This is illustrated in Figure 14-16 where two regions, ERCOT and ECAR are plotted. It is obvious that ECAR with maybe 14 SPS would have a significantly tougher time scheduling maintenance without adding to their reserve margin than would ERCOT. From an operational integrity point of view, it would be important to make sure that there always would be adequate conventional generation connected to perform the regulating duty.

On the whole, however, with spreading the SPS maintenance uniformly over the year, it does not appear from these investigations that maintenance scheduling would adversely impact utility system reliability or operational integrity.

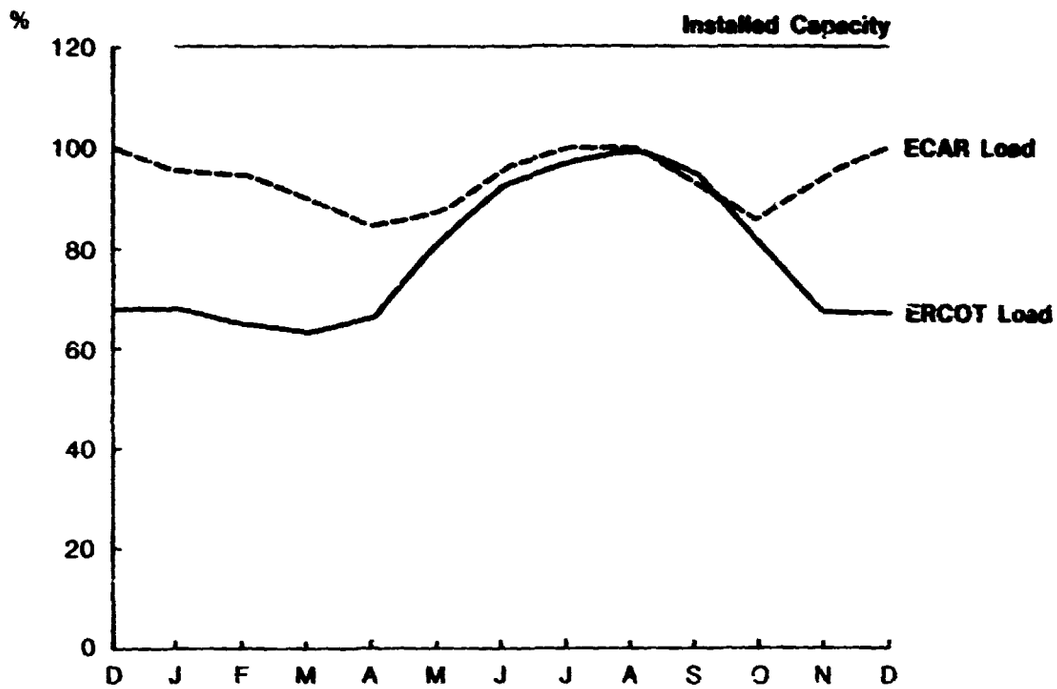

Figure 14-16 . Monthly Load Variations in East Central Region (ECAR) and Energy Reliability Council of Texas (ERCOT)

SECTION 15

OPERATIONS CONTROL CONCEPT

		Page
1.0	INTRODUCTION	15-1
2.0	OPERATIONS CONTROL CONCEPT DESCRIPTION	15-3
3.0	INTEGRATED OPERATIONS	15-5
4.0	LAUNCH AND RECOVERY SITE	15-12
5.0	LEO BASE OPERATIONS	15-16
6.0	GEO BASE OPERATIONS	15-16
7.0	SPACE CONSTRUCTION (GROUND OPERATIONS)	15-16
8.0	CREW SYSTEMS OPERATIONS (SPACE PERSONNEL)	15-28
9.0	SPACE TRAFFIC CONTROL OPERATIONS	15-32
10.0	SPS OPERATIONS AND MAINTENANCE	15-33
11.0	SPACE TRANSPORTATION AND MAINTENANCE OPERATIONS	15-34
12.0	SPS COMMUNICATIONS OPERATIONS	15-34
13.0	RECTENNA/GRID OPERATIONS	15-35
14.0	INDUSTRIAL COMPLEX OPERATIONS	15-36
15.0	SURFACE TRANSPORTATION OPERATIONS	15-36
16.0	MANPOWER ESTIMATES	15-37
17.0	SPS COMMUNICATION SYSTEM	15-40

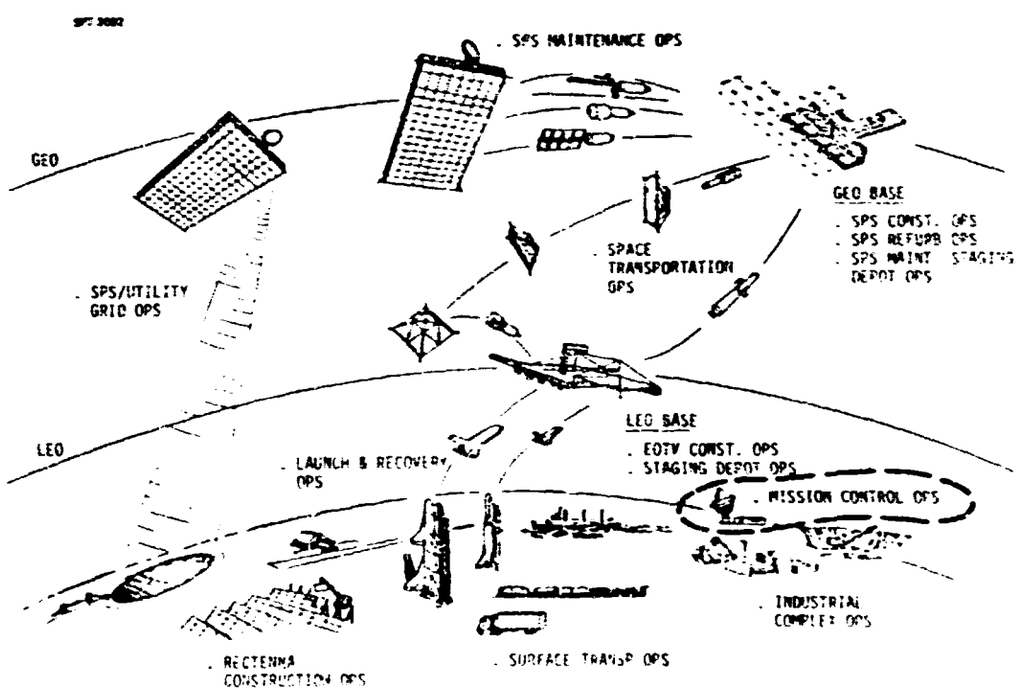

SECTION 15

OPERATIONS CONTROL CONCEPT

1.0 INTRODUCTION

A concept has been developed for the integration and coordination of SPS program operating activities which will assure that all program requirements are satisfied, that the program is accomplished in a timely fashion and that a mechanism exists for solving those problems which require essentially real-time solution (e.g., orbital anomalies).

This concept embraces the activities of all operating elements of the SPS system which include those illustrated in Figure 15-1 plus the industrial complex and the surface transportation system.

The concept was developed by defining, at a summary level, the tasks which must be performed to assure proper execution of the program. In order to make this definition, the program was divided into major activity groups and a definition of the tasks performed by each group was made. The tasks thus defined were expanded and regrouped, and additional major activity groups were defined. After several iterations it was established that the program can be divided into twelve groups or "local operations" each of which will coordinate and integrate all of the activities/tasks performed within that group. The activities of these twelve local groups or operations will in turn be coordinated and integrated by a central group called "Integrated Operations". Thus Integrated Operations will be the top-level planning and technical organization which will be responsible for the execution of the program. The total coordinating and integrating concept consisting of the twelve local operations, plus Integrated Operations, comprises the "Operations Control Concept".

The results of this analysis also indicated that it would be desirable to colocate eleven of the twelve local operations in a central location together with Integrated Operations. This arrangement provides ease of communication and makes possible the use of common computing and space communication equipment.

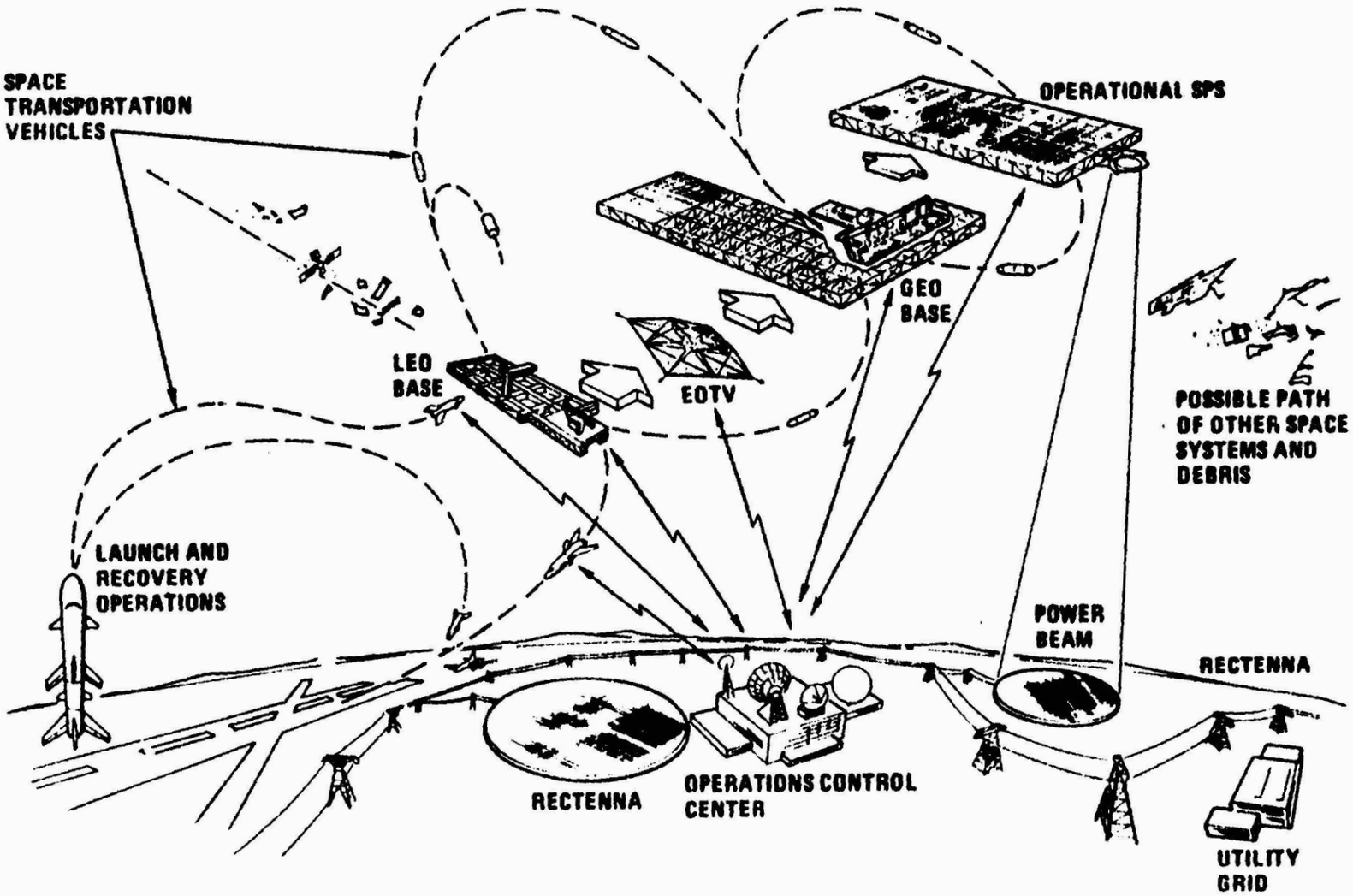

Figure 15-1. SPS Operational System

REPRODUCIBILITY OF THE
ORIGINAL PAGE IS POOR

For costing purposes, an estimate was made of the manpower required in each of the local operations as well as Integrated Operations. The ground rules used in developing the concept, and the manpower estimates are as follows:

- The period in the program to which the concept applies is the time at which 20 SPS's have been completed, and are in operation with their associated rectennas.

- Two additional SPS's and rectennas are being completed and becoming operational each year.

- To the extent possible, authority will be delegated to the local operations which are responsible for performance of the tasks. Thus there will be as much local autonomy as possible.

2.0 OPERATIONS CONTROL CONCEPT DESCRIPTION

The Operations Control Concept is illustrated in Figure 15-2. In this figure, each of the circles in the outer ring represents one of the twelve local operations. The larger central circle represents Integrated Operations, the central organization which coordinates and integrates the activities of the other twelve. As illustrated, there is two-way communication between each of the local operations and Integrated Operations. There is also two-way communication between each local operation and many of the other local operations; however, no attempt has been made to illustrate this communication in this Figure. This required communication, as well as the subjects to be communicated, are shown in the detailed task analysis tables for each local operation which are presented in the following sections.

Also indicated on this figure are the local operations which have responsibility for command and control of the operational Solar Power Satellites (SPS Operations) and for coordination and integration of all rectenna activities and their respective grid interfaces (Rectenna/Grid Operations).

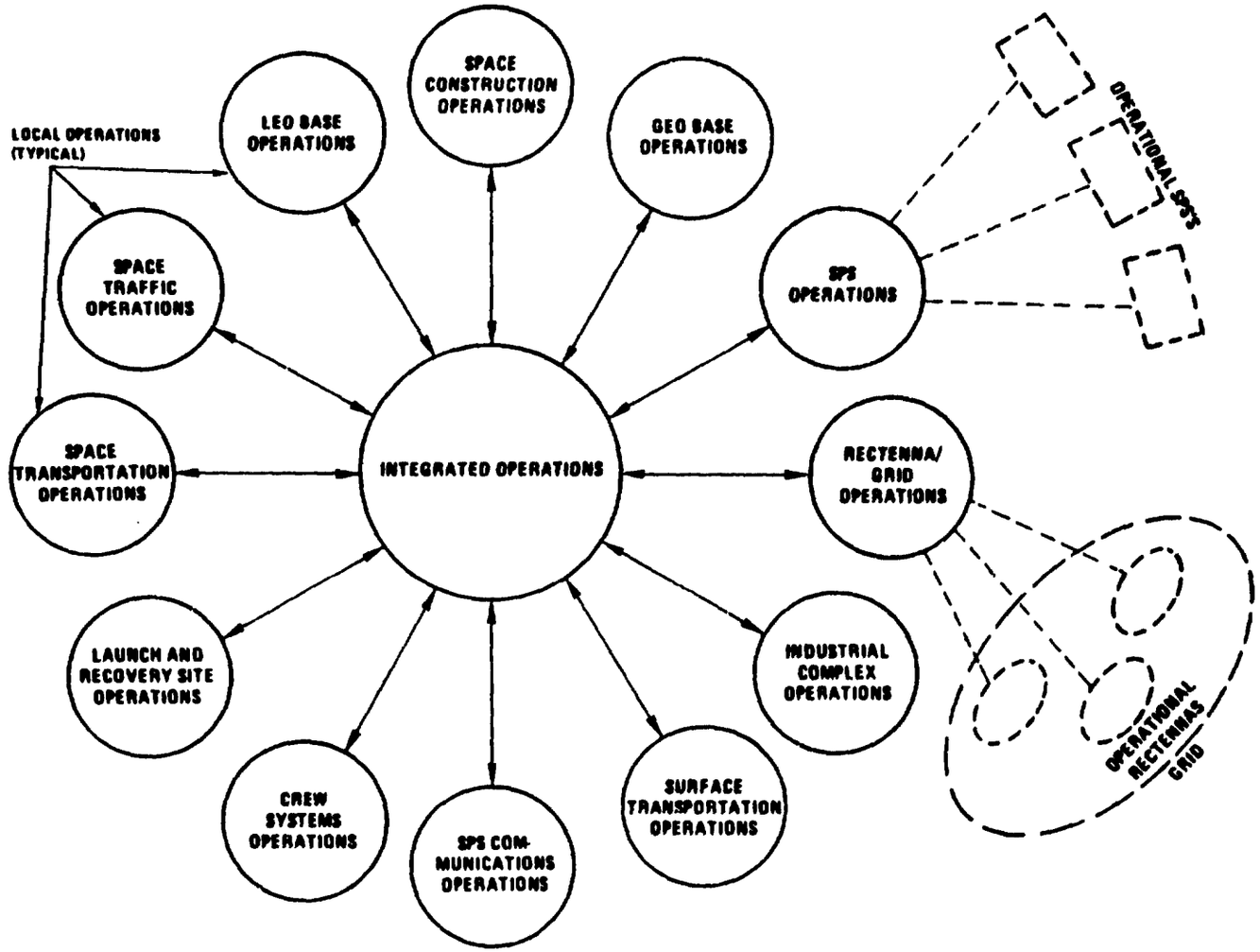

Figure 15-2. Operations Control Concept

3.0 INTEGRATED OPERATIONS

The function of Integrated Operations, the central organization, is to coordinate and integrate the activities of the twelve local operations to assure that all program requirements are satisfied and that the program is accomplished in a timely fashion. It is the central authority which will monitor the day to day progress of the program, determine the solution to any problems which develop amd implement the action to correct these problems. This includes problems which must be solved in real time or as near real time as possible (such as orbital anomalies).

In order to develop the organization required to accomplish the above, an analysis was made of the specific activities which are involved. It rapidly became apparent that there are certain common functions which Integrated Operations will perform with respect to the activities of each local operation. These are listed and described in Table 15-1.

However, among the local operations, the activities themselves vary widely, involving many disciplines and skills. Integrated Operations must include personnel with the skills and disciplines required by those activities of each local operation which are important enough to be monitored, hence, a selection of the activities to be monitored has been made. These are listed in Table 15-2.

Utilizing the material developed above, an organization was defined for Integrated Operations. This organization, which is shown in Figure 15-3, contains twelve groups of people each of which will interface with a corresponding local operation, plus three additional groups. The personnel who will interface with each of the local operations will be people who are sufficiently senior, not only to monitor performance and provide direction, but also to assure that the local operation is properly represented in any program decisions made within Integrated Operations.

The three additional groups will consist of the following:

o A technical staff with certain skills and disciplines which are not provided by any of the twelve groups interfacing with local operations. Typical of these disciplines are SPS design expertise, rectenna design

Table 15-1. General Tasks Performed by Integrated Operations

GENERAL TASK	DESCRIPTION

Identify, define and allocate overall program requirements	- based on study and test results in combination with national needs, identify overall program requirements.
	- Analyze requirements and allocate to local operations.
	- Prepare program level documentation (system specifications, program requirements documents, program directives)
	  - Allocate responsibilities for preparation of lower tier documentation among local operations.
	  - Review and approve lower tier documentation as necessary.

Prepare master program plans and schedules. Monitor program performance against these.	- Prepare, coordinate and implement master plans and schedules of program activities which will assure a program that meets all requirements in a timely fashion. - Obtain detailed plans and schedules that comply with masters from each local operation. - Set up system for feedback of plan and schedule performance from each local operation. - Set up system for monitoring plan and schedule performance which will flag problems. - Resolve programmatic problems and/or problems which involve interfacing local operations. - Assure coordination among operations.

Assure satisfactory technical performance	- Monitor technical performance at program level.
	  - Review studies, analyses, test results, orbital performance.
	  - Conduct periodic technical reviews.
	- Resolve technical concerns.
	  - Apply additional technical resources.
	  - Reallocate requirements among program elements.
	  - Review and modify requirements.

Prepare master logistics plan for program	- Obtain logistics requirements from local operations which they must have to comply with program requirements.
	- Prepare, coordinate and implement master logistics plan and schedule.
	- Obtain complying detailed plans and schedules from each local operation.
	- Set up logistics status reporting system for local operations.
	- Monitor logistics status vs. plans and schedules.
	  - Materials, equipment, propellant flow.
	  - Inventories
	  - Spares
	  - Use rates
	- Resolve program level problems and/or problems which involve interfacing local operations.

Prepare and maintain master power-generation plan and schedule	- Prepare master plan and schedule for satellite-rectenna/grid combinations and operations. Plan must consider
	  - Rectenna/grid power loading schedules
	  - Eclipse seasons
	  - Rectenna maintenance schedules
	  - Satellite maintenance schedules
	  - Contingencies

Table 15-2. Tasks Performed by Local Operations Which Are Monitored by Integrated Operations

LOCAL OPERATION	ACTIVITIES MONITORED BY INTEGRATED OPERATIONS

Launch and Recovery Site	- Provide coordination and planning of SPS ground support operations
	- Provide HLLV payload processing
	  - Receive cargo
	  - Provide intra-base cargo transportation and storage
	  - Load cargo
	- Process HLLV for flight
	  - Booster processing
	  - Orbiter processing
	- Provide PLV passenger flight preparation facilities
	  - Receive passengers at base
	  - Provide temporary quarters
	  - Provide loading facilities
	- Process PLV for flight
	  - Booster processing
	  - Orbiter processing
	- Launch HLLV and PLV
	- Provide HLLV and PLV landing site command and control
	  - Take over approach control from Space Traffic Control for both booster and orbiter
	  - Transport booster and orbiter to processing facilities

LEO Base	- Maintain and operate base
	  - Maintain and operate all base subsystems
	  - Maneuver base
	- Construct EOTV's
	  - Solar collector assembly
	  - Electric power conversion and distribution assembly
	  - Cargo support structure
	  - Subassemblies
	  - Propulsion system modules
	- Coordinate construction personnel, material and supply requirements
	- Provide rendezvous/docking capability and support for space transportation vehicles
	  - HLLV - POTV (including booster) - Cargo Tugs - PLV
	  - EOTV
	- Provide launch capability and support for:
	  - HLLV - POTV - PLV
	- Receive, store and load propellants for space transportation vehicles
	- Provide in-space maintenance for space transportation vehicles
	- Unload, provide intra-base transportation, store or reload cargo
	- Operate crew habitats and assure crew health and safety

Table 15-2. Tasks Performed by Local Operations Which Are Monitored by Integrated Operations (Continued)

LOCAL OPERATION	ACTIVITIES MONITORED BY INTEGRATED OPERATIONS

GEO Base	- Maintain and operate base
	  - Maintain and operate all base subsystems
	  - Maneuver GEO Base
	- Construct solar power satellites
	  - Solar collector assembly
	  - Electric power conversion and distribution assembly
	  - Antenna assembly
	  - Rotary joint/yoke assembly
	  - Subassemblies
	  - Remote work stations
	- Coordinate construction personnel, material and supply requirements
	- Coordinate base satellite separation schedule
	- Monitor initial satellite ground power build up
	- Support operational SPS maintenance
	  - Coordinate maintenance material/equipment requirements
	  - Coordinate SPS maintenance personnel requirements
	  - Maintain maintenance material and equipment inventories
	  - Support SPS maintenance personnel while at GEO
	- Service flight transportatic hicles
	  - EOTV annealing
	  - GEO based OTV
	  - Cargo Tugs
	- Receive and store space transportation vehicles propellants
	- Operate crew habitats and assure crew health, safety

Space Construction (Ground Operation)	- SPS construction
	  - Plan and coordinate orbital construction
	  - Prepare detailed plans and schedules
	  - Assure that materials, subassemblies and equipment are available on time at GEO.
	  - Define and coordinate construction crew requirements
	  - Monitor construction
	- SPS test and checkout
	  - Define required tests and prepare test plans
	  - Prepare test schedules
	  - Define and coordinate test crew requirements
	  - Monitor testing and test results
	- SPS/Rectenna startup
	  - Prepare plan and schedule for initial SPS/Rectenna power buildup
	  - Monitor startup operation
	- EOTV construction
	  - Plan and coordinate orbital construction
	  - Prepare detailed plans and schedules
	  - Assure that materials, subassemblies and equipment are available on time at LEO.
	  - Define and coordinate construction crew requirements
	  - Monitor construction

Table 15-2. Tasks Performed by Local Operations Which Are Monitored by Integrated Operations (Continued)

LOCAL OPERATION	ACTIVITIES MONITORED BY INTEGRATED OPERATIONS

Space Construction (Continued)	- EOTV Test and Checkout
	  - Define required tests and prepare test plan
	  - Prepare test schedules
	  - Define and procure test equipment and simulators
	  - Define and coordinate test crew requirements
	  - Monitor tests and test results

Crew Systems (Space Personnel)	- Define total numbers and types of personnel required for all in-space activities.
	- Prepare plans and schedules for obtaining necessary personnel.
	- Coordinate personnel selected with local operations which will use the personnel.
	- Define and implement personnel training program including cross-training.
	- Define and implement crew requirements for living and working in space:
	  - Environment
	  - Quarters
	  Living
	  Recreational
	  Work
	  - Recreation
	  - Medical & Dental
	  - Support Equipment
	  - Waste Management
	  - Stowage Management
	- Prepare crew rotation schedules and rosters
	  - Orbital Bases
	- Prepare and implement personnel flight preparation and rehabilitation program.

Space Traffic Control	- Maintain position and velocity data on all SPS space equipment. - Define and coordinate station keeping requirements for orbital bases and SPS. - Determine and implement actions required to avoid near misses or collisions between SPS space equipment and other satellites, debris or meteorites. - Notify Integrated Operations of results of all space flight in real time, i.e., actual launch times, actual rendezvous, docking, landing times, etc. and of any problems which occur.

SPS Operations and Maintenance	- Operate all Solar Power Satellites. Take appropriate action in the event of satellite anomalies or performance degradation.
	- Based on satellite telemetry data and data from corresponding rectenna provide the necessary commands to control power generation/conversion and radiation systems of satellite.
	- Coordinate power maintenance during eclipses
	  - Prepare detailed plans
	  - Control power generation system shut-down, start-up sequence
	  - Point antenna toward another rectenna and acquire new retro-directive beam
	- Define SPS operations crew requirements
	  - Number
	  - Schedules
	  - Training
	  - Procedures, manuals
	- Define, schedule and implement satellite maintenance.
	- Assure necessary maintenance equipment is defined, acquired and transported to GEO base on schedule.
	- Define SPS maintenance crew requirements
	  - Number
	  - Schedules
	  - Training
	  - Procedures, manuals

Table 15-2. Tasks Performed by Local Operations Which Are Monitored by Integrated Operations (Continued)

LOCAL OPERATION	ACTIVITIES MONITORED BY INTEGRATED OPERATIONS

Space Transportation	- Plan, schedule and provide Space Transportation for program.
	  - Personnel - Equipment - Materials - Propellants
	- Operate all Space Transportation vehicles
	  - HLLV's and Boosters - Cargo Tugs
	  - PLV's and Boosters - Cherry Pickers
	  - POTV's and Boosters - Maintenance Vehicles
	  - EOTV's
	- Determine propellant requirements and assure they are acquired, transported and available on schedule at necessary locations.
	- Define Space Transportation vehicle crew requirements and coordinate with Crew Systems for implementation.
	- Define Space Transportation ground (mission) control crew requirements and implement program to meet these requirements.
	- Monitor and control Space Transportation vehicles in flight.
	- Define and implement Space Transportation vehicle maintenance program.
	- Define Space Transportation vehicle maintenance crew requirements and implement program to meet these requirements.

SPS Communications Operations	- Operate and maintain SPS-dedicated communications equipment - Operate commercial communication equipment located in SPS facilities. - Define personnel requirements for operation of communication equipment. Acquire and train personnel. - Define personnel requirements for maintenance of SPS-dedicated equipment. Acquire and train personnel - Plan and implement provision of additional communication capability as the number of operational satellites increase.
Rectenna/Grid Operations	- Prepare master plan and schedule for rectenna construction to support satellite construction schedule. - Construct rectennas including rectenna side of grid interface. - Coordinate operation of rectennas with grids - Coordinate rectenna/SPS operating schedules - Plan, schedule and implement rectenna maintenance - Define personnel requirements for construction and maintenance of rectennas. Acquire and train personnel.
Industrial Complex Operations	- Prepare and maintain master plans and schedules for operation of industrial complex - Acquire facilities, equipment and materials - Define personnel requirements. Acquire and train personnel. - Perform processing and fabrication necessary to support construction and operation of SPS System - Provide warehousing and storage - Perform packaging for shipment by surface transportation
Surface Transportation Operations	- Plan and schedule the movement of cargo and propellants from the industrial complex to the launch and recovery site - Plan, schedule and implement movement of cargo and personnel between elements at the industrial complex - Coordinate use of commercial transportation equipment - Operate and maintain SPS dedicated equipment - Define personnel requirements. Acquire and train personnel.

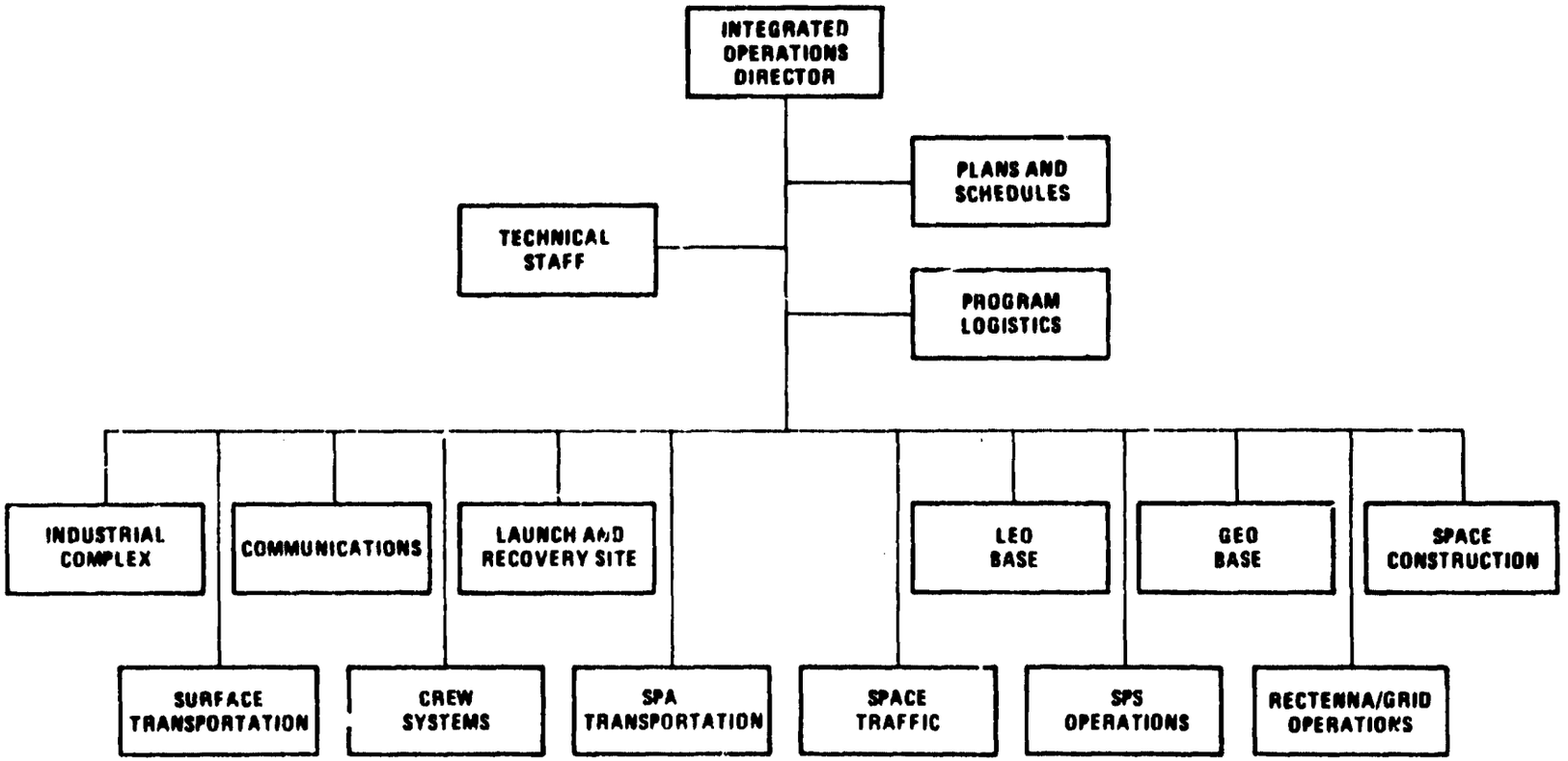

Figure 15-3. Integrated Operations Organization

expertise, space transportation vehicle design expertise. This staff, together with technical personnel of the interfacing groups, will provide the top level knowledge necessary to evaluate technical problems and make programmatic decisions. This staff will also be the technical pool to which operations personnel can turn in the event of real-time problems with space vehicles during flight.

- A central planning and scheduling staff which will perform the mechanics of preparing and maintaining the master program plans and schedules and of monitoring program performance against these. This staff will utilize inputs from the interfacing groups and provide outputs back to them.

- A program logistics staff which will coordinate the logistics requirements of the program to assure an efficient, coordinated logistics system. All of the 12 local operations will have logistics requirements and plans which this group will coordinate and integrate.

4.0 LAUNCH AND RECOVERY SITE

The activities which Integrated Operations will monitor (Table 15-2) were selected by reviewing a detailed list of the activities of each local operation. To the extent possible within the limits of the study time, in order to make this selection possible, a detailed task analysis was made for each local operation. A list of the command and control tasks associated with each operations task was also compiled. For each command and control task a designation was made as to whether the task was to be performed by the local operation or by an interfacing operation. If the task was to be performed by an interfacing operation, or interfacing operations were required to provide inputs or receive outputs, these interfacing organizations were also identified. This identification insured that responsibilities arising from interfaces were recognized, and included as basic responsibilities for the involved operations. Table 15-3 presents the results of the detailed task analysis for the Launch and Recovery Site and Table 15-4 is a key to the abbreviations used for the various local operations in the interface column.

Table 15-3. Operational Tasks - Definition/Responsibility Location/Operation: Launch and Recovery Site

LOCAL OPERATION TASK	COMMAND & CONTROL TASK	LOCAL OPERATION ACTIVITY	OTHER OPERATION INTERFACE
Provide coordination and planning of SPS ground support operations	- Receive SPS program constraints and master schedule		IO
	- Coordinate Launch and Recovery Site activities	X	
	- Receive status reports from L&R Site sub-groups	X	
	- Coordinate SPS ground support operations with non-SPS launch and recovery site operations	X	Non-SPS
	- Coordinate SPS ground support operations with other SPS local operations	X	STC, SuT, SC, ST, LB, SpT, IC, CS
	- Provide SPS ground support operations status reports to integrated Operations	X	IO
Provide Landing Command and Control	- Receive vehicle flight schedules		SpT
	- Receive vehicle status reports		SpT
	- Coordinate SPS landing operations		
	- Provide approach and landing command and control	X	
	- Interface with NAVAIDS		
	- Coordinate fire/rescue		
	- Coordinate support equipment		
	- Monitor and control passenger off-loading	X	
	- Coordinate ground transportation for returning space crews	X	
Provide HLLV Payload Processing	- Prepare vehicle specific payload manifests and schedules	X	
	- Receive cargo shipping schedules		SuT
	- Provide payload status reports	X	IO
	- Monitor cargo delivery status	X	
	- Provide inventory control	X	
	- Coordinate intra-base transportation	X	
	- Monitor/control cargo pallet refurbishment/reconfiguration	X	
	- Monitor/control cargo pallet loading operations	X	
	- Monitor/control cargo handling equipment	X	
	- availability - scheduling - dispatching	X	
	- maintenance		
	- Monitor/control cargo handling personnel	X	
	- assignments - training		
	- scheduling		
	- Provide cargo handling facilities, equipment and personnel status reports to Integrated Operations	X	IO
Provide HLLV Processing	- Receive HLLV master schedule		IO
	- Receive HLLV maintenance plans		SpT
	- Provide HLLV status reports	X	SpT, IO
	- Coordinate intra-base HLLV stages transportation requirements	X	
	- Monitor/control HLLV booster processing facility and hypergolic maintenance facility	X	
	- facility utilities		
	o status o requirements		
	- facility equipment		
	o status o consumables		
	o availability o scheduling		
	o maintenance		
	- facility personnel		
	o scheduling o assignments		
	o training		
	- facility operations		

Table 15-3. Operational Tasks - Definition/Responsibility Location/Operation: Launch and Recovery Site (Continued)

LOCAL OPERATION TASK	COMMAND & CONTROL TASK	LOCAL OPERATION ACTIVITY	OTHER OPERATION INTERFACE
Provide PLV Processing	- Receive PLV master schedule		IO
	- Receive PLV maintenance plans		SpT
	- Provide HLLV status reports	X	SpT, IO
	- Coordinate, intra-base HLLV stages transportation requirements	X	
	- Coordinate intra-base PLV stages transportation requirements	X	
	- Coordinate PLV processing requirements with the STS	X	STS
	- Monitor PLV passenger module processing	X	
	- maintenance - availability		
	- consumables - scheduling		
Launch HLLV	- Receive HLLV launch master schedule		IO, SpT
	- Provide HLLV status reports	X	IO, SpT
	- Coordinate HLLV stage deliveries with processing facilities and surface transportation		
	- Monitor/control HLLV launch pads	X	
	- maintenance - crews		
	- utilities		
	- Provide launch command and control	X	
	- Integration		
	- Site support sources (EGS, IWS, primary power etc.)		
	- Range safety - LPS master		
	- Site mechanical support (swing over, TSM, hydraulics etc.)		
	- Cryogenics - GN&C, power		
	- Non-cryogenics - Payloads		
	- Instrumentation, communications, tracking		
Provide propellant handling systems	- Receive propellant requirements; receiving and delivery schedule		IO, SpT
	- Provide propellant handling systems status reports	X	IO, SpT
	- Monitor propellant incoming delivery status	X	
	- Monitor/control propellant receiving, storage and reliquefaction facilities; also propellant delivery systems	X	
	- Availability - maintenance - inventory		
Provide Space Crew Support and Transportation	- Receive program plan and master schedule		IO
	- Monitor/contr crew	X	
	- Temporary housing - Safety		
	- Intra-base transportation - Supply		
	- Medical services		
	- Coordinate personnel tr sportation schedule	X	Spt, CS
	- Check PLV status	X	Spt, LEO
	- Coordinate crew loading	X	Spt, CS
	- Coordinate loading of crew supplies	X	

Table 15-4. Abbreviations for Names of Operations

CS	-	CREW SYSTEMS OPERATION
GB or GEO	-	GEO BASE OPERATION
IC	-	INDUSTRIAL COMPLEX OPERATION
IO	-	INTEGRATED OPERATION
L&RS	-	LAUNCH AND RECOVERY SITE OPERATION
LB or LEO	-	LEO BASE OPERATION
R/G	-	RECTENNA/GRID OPERATION
SC	-	SPS CONSTRUCTION (GROUND OPERATION)
SCOM	-	SPS COMMUNICATIONS OPERATION
SO&M	-	SPS OPERATIONS AND MAINTENANCE
SpT	-	SPACE TRANSPORTATION AND MAINTENANCE OPERATION
STC		SPACE TRAFFIC CONTROL OPERATION
SuT	-	SURFACE TRANSPORTATION OPERATION

5.0 LEO BASE OPERATIONS

The primary functions of the LEO Base are to operate the base, construct and support maintenance of EOTV's support transportation vehicles which operate from earth to LEO as well as those which operate from LEO to GEO, to provided cargo transfer and storage, and to provide transfer and/or temporary quarters to personnel in transit between earth and GEO. Table 15-5 presents a detailed list of the activities at the LEO Base.

Since it is desirable to keep the number of personnel in-orbit to a minimum due to expense, possible hazard, etc., a ground support group is provided for direct support of LEO activities. This group will support all activities except those connected with EOTV construction. A separate ground support group is provided to support both EOTV and Solar Power Satellite construction. The LEO ground support group will perform those LEO functions which do not require location at LEO. An example is planning and scheduling which can be prepared on the ground and updated with daily, or more frequent, inputs from LEO. Similarly, many of the tasks associated with inventory control for space vehicle maintenance, crew provisioning, and cargo distribution planning could also be performed on the ground using inputs from LEO.

6.0 GEO BASE OPERATIONS

The primary functions of the GEO Base are to operate the base, construct and support maintenance of operational Solar Power Satellites and support transportation vehicles operating to GEO. Table 15-6 presents a detailed task analysis of GEO Base activities. The Operations Control Concept includes a ground based group for direct support of all GEO Base activities. However, SPS construction and maintenance will be the responsibility of the same construction support operation that supports EOTV construction at LEO. (See 7.0)

7.0 SPACE CONSTRUCTION (GROUND OPERATIONS)

Although the actual construction of the EOTV's will take place at the LEO Base and construction of the operational Solar Power Satellites will be performed at the GEO Base, this group, located on the ground, will provide direct support to the orbital crews.

Table 15-5. Operational Tasks - Definition/Responsibility
Location/Operation: LEO Base Operations

LOCAL OPERATION TASK	COMMAND & CONTROL TASK	LOCAL OPERATION ACTIVITY	OTHER OPERATION INTERFACE
EOTV Construction Operations	- Receive EOTV construction management directives (schedule changes, priorities, work-around strategies, etc.)		SC
	- Manage day-to-day EOTV construction activities (status monitoring, schedule adjustment, work-arounds, equipment allocations, personnel assignments, etc.)	X	
	- Provide EOTV construction status reports		SC IO
	- Coordinate EOTV construction operations with other LEO Base Ops. (EOTV indexing maneuvers, gantry indexing maneuvers, vehicle docking, cargo delivery, etc.)	X	
	- Monitor/control construction equipment maintenance operations.	X	
	- Coordinate EOTV activation		Spt STC
HLLV Support Operations	- Coordinate HLLV approach and departure schedule	X	
	- Monitor HLLV status while at LEO Base	X	
	- Transmit HLLV status to Earth	X	Spt
	- Coordinate unscheduled HLLV maintenance plans	X	Spt
	- Receive launch window assignments		STC
	- Monitor HLLV docking and cargo handling systems and equipment status	X	
	- Availability		
	- Maintenance		
	- Crew		
	- Consumables		
	- Monitor/control HLLV docking system operations	X	
	- Monitor/control HLLV cargo loading/offloading operations	X	
	- Coordinate intra-base transportation requirements	X	
	- Conduct HLLV crew operations	X	
	- Assignments		
	- Schedules		
	- Training		
	- Crew rotation		
	- Monitor HLLV flight crew	X	
	- Transportation		
	- Schedules		
	- Temporary housing		

Table 15-5. Operational Tasks - Definition/Responsibility Location/Operation: LEO Base Operations (Continued)

LOCAL OPERATION TASK	COMMAND & CONTROL TASK	LOCAL OPERATION ACTIVITY	OTHER OPERATION INTERFACE
Personnel Transportation Operations	- Receive personnel transportation schedule		CS
	- Monitor/control PLV docking systems and personnel transfer systems	X	
	- Availability		
	- Maintenance		
	- Consumables		
	- Crew		
	- Monitor/control POTV docking/refueling and personnel transfer systems	X	
	- Availability		
	- Maintenance		
	- Consumables		
	- Crew		
	- Coordinate PLV and POTV flight schedule with LEO Base Traffic control	X	
	- Monitor crew busses status	X	
	- Availability		
	- Maintenance		
	- Consumables		
	- Crew		
	- Monitor transient crew quarters status	X	
	- Availability		
	- Occupancy		
	- Maintenance		
	- Consumables		
	- Transmit status of PLV, POTV, docking systems, crew busses, transient crew quarters to earth		Spt
	- Coordinate passenger list for each PLV		CS Spt
LEO-to-GEO Cargo Transportation Planning	- Receive SPS program constraints, master schedule		IO
	- Receive EOTV and Cargo Tug maintenance status reports		Spt
	- Receive EOTV status reports		Spt
	- Receive EOTV and Cargo Tug maintenance plans		Spt
	- Coordinate EOTV launch window assignments		STC
	- Prepare EOTV manifest	X	
	- Coordinate EOTV propellant delivery requirements		Spt
	- Transmit EOTV cargo manifest		Spt GEO
LEO Base EOTV Support Operations	- Receive cargo manifest		Spt
	- Monitor Cargo Tug status	X	
	- Availability		
	- Status		
	- Consumables		
	- Crew		

Table 15-5. Operational Tasks - Definition/Responsibility Location/Operation: LEO Base Operations (Continued)

LOCAL OPERATION TASK	COMMAND & CONTROL TASK	LOCAL OPERATION ACTIVITY	OTHER OPERATION INTERFACE
LEO Base EOTV Support Operations (Continued)	- Monitor/control EOTV stationkeeping operations	X	
	- Monitor/control Cargo Tug flight operations	X	
	- Coordinate Cargo Tug and EOTV maneuvering with LEO Base traffic control	X	STC
	- Coordinate intra-base cargo transportation requirements	X	
	- Monitor/control EOTV refueling operations	X	
	- Coordinate EOTV maintenance operations	X	Spt
	- Transmit EOTV and Cargo Tug status to ground		Spt IO
	- Coordinate EOTV, Cargo Tug Crew Operations	X	CS
	- Training		
	- Assignments		
	- Scheduling		
External Vehicle Traffic Control	- Receive vehicle arrival/departure schedules		Spt STC
	- Monitor vehicle traffic in vicinity of LEO Base	X	
	- Issue vehicle approach/departure vectoring commands		Space Vehicles
	- Receive vehicle status reports		Space Vehicles
	- Provide traffic control status reports		Spt STC
Cargo Intra-Base Transportation Operations	- Monitor status of all cargo transporters (20-30 units). (Availability, location, destination, etc.)	X	
	- Control movement of all cargo transporters (activate, deactivate, control movement, switching, etc.)	X	
	- Coordinate cargo transporter maintenance requirements with Base equipment maintenance group	X	
Cargo Sorting and Storage Operations	- Receive cargo manifest		L&RS
	- Receive cargo storage location roadmap		L&RS
	- Record storage locations of each component	X	
	- Receive cargo distribution instructions		SC
	- Record removal of components from storage	X	
	- Check inventory control records	X	
Cargo Distribution Operations	- Receive user equipment component delivery requirements		SC
	- Integrate cargo delivery requests	X	
	- Issue cargo distribution instructions to warehouse	X	
	- Monitor cargo delivery operations including machine loading	X	
	- Coordinate support equipment usage requests	X	
	- Maintain records	X	

Table 15-5. Operational Tasks - Definition/Responsibility Location/Operation: LEO Base Operations (Continued)

LOCAL OPERATION TASK	COMMAND & CONTROL TASK	LOCAL OPERATION ACTIVITY	OTHER OPERATION INTERFACE
LEO Base Space Vehicle Maintenance Operations	- Transmit vehicle maintenance status reports		Spt
	- Receive vehicle maintenance plans		Spt
	- Inventory control	X	
	- Order replacement parts		IC
	- Coordinate vehicle intra-base transportation requirements	X	
	- Monitor vehicle maintenance equipment and facilities status	X	
	- Availability		
	- Maintenance		
	- Replacement equipment		
	- Consumables		
	- Control crew operations		
	- Assignments		
	- Training	X	
	- Scheduling	X	
	- Crew rotation		CS
	- Coordinate vehicle maintenance plan and status with ground-based support group		Spt
	- Monitor and control vehicle maintenance operations	X	
	- Remotely control/monitor the EOTV thruster refurbishment machines	X	
	- Coordinate maintenance vehicle (flying cherry-picker) maneuvering between LEO Base and the EOTV		STC Spt
	- Control/monitor flying cherrypicker "cherrypickers"	X	
Base Subsystems Operations			
- Electrial Power System	- Issue maintenance requests		IO
	- Report status of base electrical power system		IO
Flight Control System (including propulsion)	- Receive base orbit-keeping and attitude control maneuver parameters from ground-based tracking		STC
	- Issue maintenance requests		IO
	- Report status of base flight control system		IO
Communications System	- Issue Maintenance requests		IO
	- Report status of system		IO
Data Processing System	- Issue maintenance requests		IO
	- Report status of system		IO

Table 15-5. Operational Tasks - Definition/Responsibility Location/Operation: LEO Base Operations (Continued)

LOCAL OPERATION TASK	COMMAND & CONTROL TASK	LOCAL OPERATION ACTIVITY	OTHER OPERATION INTERFACE
Crew Support Operations	- Issue habitat systems maintenance requests		IO CS
	- Report status of habitat systems and consumables		CS IO
	- Report status of base personnel		CS IO
	- Schedule hotel ops	X	
Base Equipment Maintenance Operations	- Receive base equipment maintenance plan from ground-based control group		IO
	- Receive equipment maintenance requests	X	
	- Coordinate, monitor, control base equipment maintenance ops.	X	
	- Report status of base equipment maintenance		IO

Table 15-6. Operational Tasks - Definition/Responsibility
Location/Operation: GEO Base Operations

LOCAL OPERATION TASK	COMMAND & CONTROL TASK	LOCAL OPERATION ACTIVITY	OTHER OPERATION INTERFACE
Construct Solar Power Satellites	- Manage satellite construction facilities	X	
	- Solar collector assembly facility		
	- Antenna assembly facility		
	- Rotary joint/yoke assembly facility		
	- Subassembly facility		
	- Remote work stations		
	- Construction equipment and personnel		
	- Provide construction status reports		SC
	- Maintain construction material inventory control	X	
	- Coordinate construction material and supply requirements		SC
	- Coordinate construction personnel requirements	X	SC CS
	- Monitor/control 1st and 2nd pass energy conversion system assembly	X	
	- Monitor/control power transmission system assembly	X	
	- Monitor/control interface system assembly	X	
	- Monitor/control satellite system mating, final test and checkout	X	
	- Coordinate base - satellite separation schedule		IO, SIC SO&M
	- Coordinate/monitor initial satellite-ground power build-up	X	SO&M
Support SPS Maintenance	- Receive SPS maintenance plan and schedule		SO&M
	- Manage satellite maintenance depot	X	
	- Component refurbishment facilities		
	- Klystron tube refurbishment facilities		
	- Reconditioned component storage		
	- Defective component storage		
	- Maintenance pallet loading/unloading		
	- Maintenance materials inventory control		
	- Equipment maintenance		
	- Coordinate maintenance crew requirements	X	SO&M CS
	- Numbers		
	- Schedule		
	- Monitor/support traveling maintenance crew while at GEO and during maintenance activities.	X	
	- Monitor/control at SPS maintenance activities.	X	
	- Monitor/control mobile maintenance support equipment and systems (crew habitat, flying cherrypickers, KTM pallets).	X	SO&M STC
	- Coordinate intra-base transportation	X	
	- Materials		

Table 15-6. Operational Tasks - Definition/Responsibility Location/Operation: GEO Base Operations (Continued)

LOCAL OPERATION TASK	COMMAND & CONTROL TASK	LOCAL OPERATION ACTIVITY	OTHER OPERATION INTERFACE
Support SPS Maintenance (Continued)	- Equipment		
	- Crews		
	- Monitor/control vehicle traffic on and around SPS	X	SO&M
	- Monitor/control inter-satellite traffic	X	
	- Monitor/control built-in maintenance support equipment	X	
	- Provide SPS maintenance status reports	X	SO&M IO
	- Coordinate maintenance materials and equipment procurement	X	SO&M
Service Flight Transportation Vehicles	- Provide flight vehicle status reports		SpT
	- EOTV Annealing		
	- GEO based OTV		
	- Cargo Tugs		
	- Coordinate EOTV annealing schedule		Spt
	- Monitor/control EOTV annealing	X	
	- Coordinate OTV and Cargo Tug Propellant and Supplies Delivery Requirements		Spt
	- Monitor/control GEO based flight vehicle fueling	X	
	- Monitor/control GEO based flight vehicle maintenance	X	
Control External Logistic Vehicles	- Coordinate EOTV LEO-GEO arrival/departure schedules and cargo listing		Spt STC
	- Monitor EOTV rendezvous/de-orbit maneuvers	X	Spt
	- Monitor/control EOTV station-keeping at GEO base	X	
	- Coordinate satellite maintenance cargo OTV GEO-GEO arrival/departure schedules		Spt
	- Monitor OTV rendezvous/de-orbit maneuvers	X	
	- Issue OTV docking/departure instructions	X	
	- Monitor/control OTV docking and unlocking operations	X	
	- Monitor/control OTV loading and unloading operations	X	
	- Monitor/control cargo tug payload pallet removal/delivery at EOTV	X	
	- Monitor/control cargo tug maneuvers between EOTV and base	X	
	- Monitor/control cargo tug payload pallet delivery/removal at base	X	
Direct Base Transportation	- Monitor intra-base logistic vehicle status	X	
	- Coordinate base logistic vehicle supply requirements		IO Spt
	- Monitor/control railed crew transport	X	
	- Maintain cargo warehousing and distribution control	X	

Table 15-6. Operational Tasks - Definition/Responsibility Location/Operation: GEO Base Operations (Continued)

LOCAL OPERATION TASK	COMMAND & CONTROL TASK	LOCAL OPERATION ACTIVITY	OTHER OPERATION INTERFACE
Direct Base Transportation (Continued)	- Monitor/control railed cargo transport	X	
	- Monitor/control base free flyers (MRWS, EVA/MMU, etc.)	X	
Maneuver GEO Base	- Maintain base attitude control	X	
	- Maintain base ephemeris	X	
	- Control base construction indexing	X	
	- Coordinate base construction indexing operations schedule		SC
	- Control base satellite separation	X	
	- Coordinate base GEO-GEO maneuver schedule		STC SO&M
	- Control base GEO-GEO transfer maneuver	X	
Control Base Subsystems	- Provide base subsystem status		IO
	- Electrical power		
	- Attitude		
	- Propulsion		
	- Guidance navigation and control		
	- Coordinate base subsystem consumable and supply requirements		Sat
	- Monitor/control base subsystems	X	
Assure Construction and Maintenance Quality	- Provide construction quality control status		SC
	- Provide satellite maintenance quality control status		SO&M
	- Control satellite construction inspection and test	X	
	- Subassembly operations		
	- Energy conversion assembly ops		
	- Power transmission assembly ops		
	- Rotary joint and yoke assembly ops		
	- System mating operations		
	- Final test and checkout		
	- Coordinate construction article inspection and test schedules		SC
	- Coordinate/monitor remote satellite maintenance inspection		SO&M
	- Monitor/control reconditioned component inspection and test	X	
Operate Habitats	- Monitor module susbsystem status	X	
	- Environmental control/life support		

Table 15-6. Operational Tasks - Definition/Responsibility Location/Operation: GEO Base Operations (Continued)

LOCAL OPERATION TASK	COMMAND & CONTROL TASK	LOCAL OPERATION ACTIVITY	OTHER OPERATION INTERFACE
Operate Habitats (Continued)	- Food storage and preparation		
	- Dining areas		
	- Crew quarters		
	- Crew provisions/gear		
	- Housekeeping equipment/supplies		
	- Housekeeping waste		
	- Furnishings		
	- Off duty/on duty facilities		
	- Passageways and mobility aids		
	- Lighting and intercoms		
	- Emergency power		
	- Fire warning system		
	- Storm shelter		
	- Manage construction and satellite maintenance crew centers	X	
	- Coordinate module consumable and supply requirements		SOC
	- Coordinate personnel rotation schedules		CS
	- Manage transient crew quarters	X	
Assure Crew Health and Safety	- Monitor personnel health status	X	
	- Manage base medical activities	X	
	- Coordinate medical supply requirements		CS
	- Coordinate crew medical transfer/rotation schedules		CS
	- Monitor/control base operations safety	X	
	- Construction personnel and equipment		
	- Maintenance personnel and equipment		
	- Flight personnel and equipment		
	- EVA personnel and equipment		
	- Provide base safety status		IO
	- Coordinate base safety requirements		IO
Maintain Base Equipment	- Provide base subsystem and equipment maintenance status	X	IO
	- Electrical power		
	- Attitude control		
	- Propulsion		
	- GN&C		
	- Comm/Data		

Table 15-6. Operational Tasks - Definition/Responsibility Location/Operation: GEO Base Operations (Continued)

LOCAL OPERATION TASK	COMMAND & CONTROL TASK	LOCAL OPERATION ACTIVITY	OTHER OPERATION INTERFACE
Maintain Base Equipment (Continued)	- ECLS		
	- Other module subsystems		
	- Beam builders		
	- Bus deployers		
	- Cherry Pickers		
	- Other construction equipment		
	- Base logistic equipment		
	- Manage base maintenance operations	X	
	- Maintain base maintenance spares inventory control	X	
	- Coordinate base maintenance spares requirements		IC
Provide Communications and Data	- Manage intra-base communications	X	
	- Crew habitats		
	- Base control Center		
	- Maintenance Center		
	- Medical Center		
	- Construction Centers		
	- Maintenance Centers		
	- Training Center		
	- Remote Work Stations		
	- Base Logistic Vehicles		
	- Free Flyers		
	- Provide external base communications status	X	SCOM
	- Voice links		
	- Telemetry links		
	- Video (color) links		
	- Tracking beacons		
	- Manage external communications and data	X	
	- External logistic vehicle operations		
	- LEO base coordination		
	- Earth based mission control		
Train Crew	- Receive crew training program		CS
	- Manage GEO crew training operations	X	
	- Construction tasks		
	- Habitation tasks		
	- Operations tasks		
	- Maintenance tasks		
	- Provide crew training status		CS

Table 15-6. Operational Tasks - Definition/Responsibility Location/Operation: GEO Base Operations (Continued)

LOCAL OPERATION TASK	COMMAND & CONTROL TASK	LOCAL OPERATION ACTIVITY	OTHER OPERATION INTERFACE
Support Personnel Transportation Operations	- Receive personnel transportation schedule		CS Spt
	- Monitor/control POTV docking systems and personnel transfer systems	X	
	- Monitor/control mobile maintenance crew habitat docking systems and personnel transfer system	X	
	- Coordinate POTV and mobile crew habitat flight schedule with GEO Base Traffic Controller	X	
	- Monitor crew busses status		
	- Monitor transient crew quarters status	X	
	- Coordinate passenger list for each POTV	X	
	- Transmit status of POTV, mobile crew habitat, transient crew quarters, docking systems to Earth	X	Spt

A single group will support both the EOTV and SPS construction because of the similarity of the vehicle construction , especially the solar arrays, and the similarity of the tasks involved. It is probable that certain economies will be realized by this combination, e.g., common inventories and inventory controls can be used for many supplies. Table 15-7 presents a detailed list of Space Construction (Ground Operations) activities.

8.0 CREW SYSTEM OPERATIONS

Inasmuch as there are many common activities involved in acquiring, training and defining requirements for space environment for all personnel living and working in space, a single operation (group) has been assigned the responsibility for acquisition, training etc., for all space personnel. Examples of these common activities are:

- Physical examination and determination of satisfactory physical condition.
- Training in basic conduct for living and working in space
- Definition of environmental requirements to be met by all space vehicles/bases.

It is recognized that, depending on the space assignments, personnel of many different skills and disciplines must be recruited. It will be the responsibility of this operation to work in close conjunction with the operations which require the people in the selection of personnel. This close cooperation will also be necessary for the definition of the training required, the definition of which training can be accomplished on the ground, and/or which must take place in space. By integrating the system crew requirements and training, a considerable amount of cross-training can be accomplished, thereby reducing the total number of personnel required, allowing substitution of personnel in filling duty rosters, and providing backup capability in-orbit in the event of illness or contingencies.

Tasks to be performed by this operation are:

- Integration and implementation of requirements for the number of personnel required in space

Table 15-7. Operational Tasks - Definition/Responsibility Location/Operation: Space Construction (Ground Operation)

LOCAL OPERATION TASK	COMMAND & CONTROL TASK	LOCAL OPERATION ACTIVITY	OTHER OPERATION INTERFACE
SPS Construction	- Plan and coordinate SPS orbital construction in accordance with overall program requirements, master plan and schedule	X	IO GB
	- Prepare detailed plans, schedules, procedures for construction of - Solar collector assembly - Electric power conversion and distribution assembly - Rotary joint/yoke assembly - Subassemblies - Remote work stations	X	GB
	- Assure that materials, subassemblies and equipment are procured, packaged and transported to GEO on schedule	X	IC SuT SpT LB GB IO
	- Define crew requirements and coordinate with Crew Systems to assure that adequate numbers of personnel are available on 90 day duty cycles with proper - Training - Procedures - Manuals	X	CS SpT
	- Monitor on-orbit construction and provide support for problem resolution - Work-arounds - Additional or replacement equipment - Additional personnel on-orbit - Skilled personnel for advisory communication	X	GB IO
SPS Test and Checkout	- Prepare SPS test plan for construction process and for check-out following completion	X	GB
	- Prepare schedules and procedures for tests	X	GB IC
	- Define and procure test equipment and simulators required for test and check-out both on-orbit and on ground	X	GB IC
	- Define test crew requirements and assure that adequate numbers of personnel are available with proper training, procedures, manuals. Coordinate on-orbit personnel requirements with Crew Systems	X	CS GB
	- Monitor test results and provide support for problem resolution - Advice on how to repair - Replacement parts	X	GB
SPS/Rectenna Startup	- Prepare plan and schedule for initial buildup of power on SPS, radiation to rectenna, power conversion and tie-in to grid by rectenna	X	GB R/G IO SO&M
	- Coordinate SPS/Rectenna startup - Orbital position - Space Traffic Control - SPS readiness - GEO Base, SPS Operations and maintenance - Rectenna readiness - Rectenna/Grid Operations - SPS operation - SPS Operations and Maintenance - Rectenna operation - Rectenna/Grid Operations	X	IO STC GB SO&M R/G SO&M R/G

Table 15-7. Operational Tasks - Definition/Responsibility Location/Operation: Space Construction (Ground Operation) (Continued)

LOCAL OPERATION TASK	COMMAND & CONTROL TASK	LOCAL OPERATION ACTIVITY	OTHER OPERATION INTERFACE
SPS/Rectenna Startup (Cont'd)	- Monitor startup operation and provide support for problem resulution - Aid in problem solution - Terminate startup - Continue startup with part of system in-operative	X	SO&M IO
EOTV Construction	- Plan and coordinate EOTV orbital construction in accordance with overall program requirements, master plan and schedule	X	IC LB
	- Prepare detailed plans, schedules and procedures for: - Solar collector assembly - Electric power conversion and distribution assembly - Electric propulsion subsystem assembly - Subassemblies - Cargo support assembly	X	LB
	- Assure that materials, subassemblies and equipment are procured, packaged and transported to LEO on schedule	X	IC SpT LB SpT IO
	- Define crew requirements and coordinate with Crew Systems to assure that adequate numbers of personnel are available on 90 day duty cycles with proper - Training - Procedures - Manuals	X	CS SpT
	- Monitor on-orbit construction and provide support for problem solutions - Work-arounds - Additional or replacement equipment - Additional personnel on-orbit - Skilled personnel for advisory communication	X	LB
EOTV Test and Checkout	- Prepare EOTV test plan for construction process and for check-out following completion	X	LB
	- Prepare schedules and procedures for tests	X	LB IO
	- Define and procure test equipment and simulators for test and check-out both on-orbit and on ground		
	- Define test crew requirements and assure that adequate numbers of personnel are available with proper training, procedures, manuals. Coordinate on-orbit personnel requirements with Crew Systems	X	LB CS
	- Monitor test results and provide support for problem resolution - Advice on how to repair - Replacement parts	X	LB

- Acquisition and training of personnel

- Definition of requirements and implementation of activities required to meet those requirements, for personnel living and working in space for prolonged periods.

- Definition of requirements and implementation of activities required to meet those requirements, for personnel operating or being transported by space vehicles.

- Definition of crew sizes and schedules for in-orbit and transportation activities.

- Definition and implementation of personnel in-space activities programs.

- Definition and implementation of ground program for space personnel before and after space duty tours.

9.0 SPACE TRAFFIC CONTROL OPERATIONS

The relatively large numbers of vehicles operating in space as a part of the SPS system dictate the requirement for a dedicated Space Traffic Control Operation which will ensure that no collisions occur among the SPS space elements or between those elements and non-SPS space traffic or debris. This operation will track and control trajectories of the SPS system vehicles and will coordinate with the Air Defense Command concerning other traffic.

The SPS space traffic includes:

- One HLLV flight per day LEO to GEO
- PLV flights LEO to GEO
- LEO Base
- Cargo tugs between LEO and EOTV's
- 20 EOTV's in transit between LEO and GEO
- GEO Base
- One POTV every 15 days LEO to GEO
- Cargo tugs between GEO and EOTV's
- Operational Satellites (20-100)
- Maintenance vehicles between GEO and SPS's

Tasks to be performed by this operation are:

- Track and/or maintain position and trajectory data on all SPS space traffic
- Define trajectory and/or stationkeeping requirements for a SPS space traffic.
- Define and coordinate launch windows for all SPS space transportation vehicles.
- Define and coordinate docking, rendezvous and landing times for all space transportation vehicles.

10.0 SPS OPERATIONS AND MAINTENANCE

This operation will monitor the telemetry data from the Solar Power Satellites on a 24 hours per day 7 days per week basis. This data will be used as a basis for command and control of the unmanned satellites in real-time. Although there are an extremely large number of telemetry points on each satellite, it is estimated that by the use of on-board limit-checking and automatic ground processing, one crew will be able to control five satellites. This, of course, requires that each satellite is examined in sequence rather than continuously. This is the technique in use on many current satellites and works very well provided the period between examinations is not too long.

The responsibility for satellite maintenance planning is assigned to this operation also, although the maintenance is performed from the GEO Base. The reason for this assignment is that much of the information required for command and control of the satellites is the same information used to determine if unscheduled maintenance is required. An example of this is the amount of redundant equipment in use on the satellite at any given time. Command and control requires this information to know how much backup capability exists in the event of an anomaly while maintenance may want to schedule repair when the backup capability reaches some minimum amount.

Tasks to be performed by the operation are:

- Monitor telemetry information to determine performance and status of operational satellites.
- Command and control satellites. Determine and implement appropriate action in the event of anomalous satellite performance.
- Operate satellites in accordance with master plan/schedule for power maintenance during eclipse seasons.
- Define operations crew requirements, select and train personnel.
- Prepare normal and contingency procedures.
- Define, schedule and implement satellite maintenance
- Define maintenance crew requirements. Coordinate training with Crew Systems.
- Control satellites during maintenance.

11.0 SPACE TRANSPORTATION AND MAINTENANCE OPERATIONS

This operation is responsible for all space transportation provided by the SPS system. As a part of this responsibility it will operate the manned vehicles, and provide real-time systems monitoring and contingency support for all flights, very much as the MCC will provide these services for STS flights. This activity will differ from the MCC in that there are more vehicles, more flights and recoverable boosters to be monitored. Since the current plan is to develop the PLV by modifying the STS, the MCC may still be used to support flights of this vehicle.

The responsibility for SPS maintenance planning is assigned to this operation for the same reason that SPS maintenance was assigned to Solar Power Satellite Operations, namely that in the course of supporting the space vehicle operations, this group will accumulate the data needed to determine maintenance requirements.

The activities to be performed by this operation are:

- Provide all space transportation for program
- Provide real time systems monitoring and contingency support during all flights
- Define space transportation vehicle crew requirements, coordinate acquisition and training with Crew Systems Operation.
- Define space transportation vehicle ground (mission) control crew requirements. Acquire and train personnel.
- Define, schedule and implement space transportation vehicle maintenance.
- Assure necessary maintenance equipment and supplies are acquired and are at proper location when required.
- Define maintenance crew requirements. Acquire and train personnel.

12.0 COMMUNICATIONS OPERATIONS

The operational satellites, the GEO Base and the SPS maintenance vehicles are in-orbit over the continental U.S. and can communicate directly with

the SPS operations center. All other traffic, including the LEO Base will require a global communication capability. The SPS system will utilize existing commercial facilities for terrestial communications; however, SPS dedicated-facilities will be required for communication with elements in non-geostationary orbit. (See Paragraph 17.0 in this section)

The activities to be performed by SPS communications are:

- Operate and maintain SPS-dedicated communication equipment
- Operate commercial communication equipment located in SPS facilities
- Define personnel requirements for operation of communication equipment. Acquire and train personnel.
- Plan and implement provision of additional communication capability as the number of SPS Operational satellites increase.

13.0 RECTENNA/GRID OPERATIONS

The principal tasks of this operation are to construct the rectennas, to coordinate the operation of the rectennas with the grids, and to coordinate operation of the rectennas with the satellites. Specific tasks are:

- Plan and schedule rectenna construction to support satellite construction schedule
- Construct rectennas including rectenna side of grid interface.
- Coordinate operation of rectennas with grid(s).
- Coordinate rectenna/SPS operating schedule to accommodate:
  - Rectenna maintenance
  - SPS maintenance
  - Eclipse seasons
  - Low grid load level conditions
- Plan, schedule and implement rectenna maintenance
- Define personnel requirements for construction and maintenance of rectennas. Acquire and train personnel.

14.0 INDUSTRIAL COMPLEX OPERATIONS

The principal function of this operation is to coordinate and integrate the operation of the SPS industrial complex. This function will include all activities from procurement of raw materials from mines or wells, through all necessary processing, fabrication and packaging required to prepare the finished product for shipment.

Specific tasks performed by this operation are:

- Prepare and maintain master plans and schedules using inputs from industrial complex.
- Acquire facilities, equipment and materials
- Define personnel requirements. Acquire and train personnel
- Perform processing and fabrication necessary to supply parts and equipment for construction and operations of SPS system.
- Provide warehousing and storage
- Perform packaging for shipment by surface transportation.

15.0 SURFACE TRANSPORTATION OPERATIONS

The principal function of this operation is to coordinate and integrate all surface transportation required by the SPS system. This will include conventional air transportation (as differentiated from space transportation). Development of some SPS-dedicated equipment and facilities may be required depending upon the location selected for the Launch and Recovery Site.

Specific tasks to be performed are:

- Plan, schedule and implement the movement of cargo and propellants from the industrial complex to the Launch and Recovery Site. This includes selection of the mode of transportation, i.e., boat, barge, rail, truck or air.
- Plan, schedule and implement movement of cargo and propellants between elements of the industrial complex.

- Coordinate use of commercial transportation equipment.
- Operate and maintain SPS-dedicated equipment.
- Define personnel requirements. Acquire and train personnel to operate SPS-dedicated equipment.

16.0 MANPOWER ESTIMATES

In order to prepare cost estimates for the Operations Control Concept, manpower estimates were made for Integrated Operations and for each local operation. These estimates were made by reviewing the detailed task analyses and estimating the number of people required to perform each task.

Table 15-8 presents the staffing estimate for Integrated Operations, indicating the number of people required for each element of the Organization shown in Figure 15-3. Note that the requirements are presented in two categories, i.e., day shift and three shifts. Day shift indicates the number of personnel required to work a normal eight hour day. Three shifts indicate the number of positions that must be filled on a three-shift-per-day, seven-day-per-week basis. The number of people working eight hours per day, required to support each shift position, is 4.5.

Using the same estimating technique manpower estimates were made for each local operation. Table 15-9 presents the manpower requirements for the entire Operations Control Concept.

Table 15-8. Operations Control Concept Staffing Estimate

		DAY SHIFT	*3 SHIFTS
1.	Integrated Operations	470	8
2.	Space Traffic Control	30	3
3.	Space Transportation & Maintenance	300	20
4.	SPS Operations & Maintenance (For 20 Operational Satellites)	60	40
5.	Crew Systems	140	2
6.	LEO (Does not include EOTV construction support)	25	5
7.	GEO (Does not include SPS construction support)	50	8
8.	Space Construction (EOTV and SPS)	90	25
9.	Industrial Complex	540	50
10.	Surface Transportation	60	20
11.	SPS Communications	70	40
12.	Rectenna/Grid	120	10
	TOTAL	1,955	231

* Requires 4.5 persons per position.

Table 15-9. Integrated Operations Organization Staffing Estimate

		DAY SHIFT	*3 SHIFTS
1.	Space Traffic Control		1
2.	Space Transportation & Maintenance	18	2
3.	SPS Operations & Maintenance	5	2
4.	Crew Systems	16	
5.	LEO	20	
6.	GEO	30	
7.	Space Construction	11	
8.	Industrial Complex	110	
9.	Surface Transportation	48	2
10.	SPS Communications	18	
11.	Launch & Recovery Site	20	
12.	Rectenna/Grid	24	2
13.	Plans and Schedules	48	1
14.	Program Logistics	48	
15.	Technical Staff	52	
16.	Director	2	
	TOTAL	470	8

* Requires 4.5 persons per position.

C-7

17.0 SPS COMMUNICATION SYSTEM

A communication system concept has been developed for the SPS operational system. The Surface Transportation System and the Industrial Complex have not been included in this system since it is anticipated that communication between these and other system elements will be by common carrier; hence, not a part of the dedicated SPS system.

The matrix in Figure 15-4 indicates those system elements between which communication is required. For each number on the matrix, Table 15-10 contains a fact sheet which defines the requirements for communication between the elements indicated. These fact sheets also state how the communications will be implemented using the system concept presented herein.

A summary description of the system and its operation is presented in the following paragraphs; the details of each element-to-element communication link are provided on the appropriate fact sheet. The concept consists principally of direct links from the CONUS ground elements to the space elements in geostationary orbit over CONUS; two dedicated relay communication satellites at geostationary altitudes located east and west of the GEO Base such that the line-of-sight communications path from the GEO Base just misses the earth; a communication capability on the GEO Base equivalent to that of the relay satellites; and a series of direct links among the vehicles, bases and relay satellites. Communications will be completely digital, thus providing flexible, efficient interconnection of all the diverse types of communications required. Cost trends in analog and digital hardware make this approach the proper choice for the time frame being considered. The data rates required are well within current technology capabilities.

The proposed system has the following advantages:

1. Commonality of equipment. Essentially only two types of equipment are used, Ku-band and S-band.

2. The equipment is current state-of-the-art and should be very low weight and inexpensive in the time period of interest.

	OCC	LCC	LEO BASE	GEO BASE	MMB	SPS's	RCC	PLV	HLLV	EOTV	POTV	CARGO TUG	MSS-OTV
OPERATIONS CONTROL CENTER (OCC) (WBS 1.5.1)	X	1	2	3	4	5	6	7	8	9	10	X	11
LAUNCH CONTROL CENTER (LCC) (WBS 1.3.7.5)		X	12	X	X	X	X	13	14	X	X	X	X
LEO BASE (WBS 1.2.2)			X	15	X	X	X	16	17	18	19	20	X
GEO BASE (WBS 1.2.1)				X	21	22	X	X	X	23	24	25	26
MOBILE MAINTENANCE BASE (MMB) (WBS 1.2.3.2)					X	27	X	X	X	X	X	X	28
SOLAR POWER SATELLITES (SPS's) (WBS 1.1)						X	29	X	X	X	X	X	X
RECTENNA CONTROL CENTER (RCC) (WBS 1.4.6)							X	X	X	X	X	X	X
PERSONNEL LAUNCH VEHICLE (PLV) (WBS 1.3.3)								X	30	X	31	32	X
HEAVY LIFT LAUNCH VEHICLE (HLLV) (WBS 1.3.1)									X	X	33	34	X
ELECTRIC ORBIT TRANSFER VEHICLE (EOTV) (WBS 1.3.2)										X	X	35	X
PERSONNEL ORBIT TRANSFER VEHICLE (POTV) (WBS 1.3.4)											X	36	X
CARGO TUG (WBS 1.3.6)												X	37
MAINTENANCE SORTIE SUPPLY OTV (MSS-OTV) (WBS 1.3.3)													X

NUMBERS ARE FACT SHEET NUMBERS

X SIGNIFIES COMMUNICATIONS NOT REQUIRED

Figure 15-4. SPS Communications Matrix

3. The possibility of interference from the 5GW power beam is minimized by using Ku-band communication to the elements generating or utilizing this beam.
4. Relatively broad-beam, S-band is used to communicate with space vehicles, thus relaxing the pointing and attitude control requirements imposed by communication.
5. The frequencies recommended are within those currently allocated for this type of communication.
6. All links have ample growth potential in the event additional capability is required as the requirements become better defined.
7. The potential of terrestial noise interference is minimized.

Figure 15-5 illustrates the four main links at CONUS plus the LEO Base link to the communication satellite equipment on the GEO Base (when the LEO Base is over CONUS). Analysis of the individual element to element communications implementations in Table 15-10 indicates that Link 1 is the most heavily loaded link (~400 Mbps) since it carries the OCC to Geo traffic. This includes all traffic from the OCC to non-geostationary orbital elements which must be relayed via GEO to the communication satellites. The traffic on this high data rate, high reliability link consists of a wide range of voice, data and video information.

Ku-band has been selected as the appropriate baseline frequency range for this link. The 12/15 Ghz communication satellite bands may be used, but a new allocation might be required for this rather special point-to-point communication service. Much higher frequencies are not desirable, due to excessive rain losses during heavy rain storms. Much lower frequencies do not allow the signals to be restricted to the immediate area of the OCC and GEO, and would therefore utilize more of the valuable frequency/orbit spectrum resource.

Large parabolic antennas will be used on both ends of this link. Twenty-meter diameter antennas are probably appropriate for the earth terminal antennas, and the GEO antenna will be in the five-to-ten-meter range.

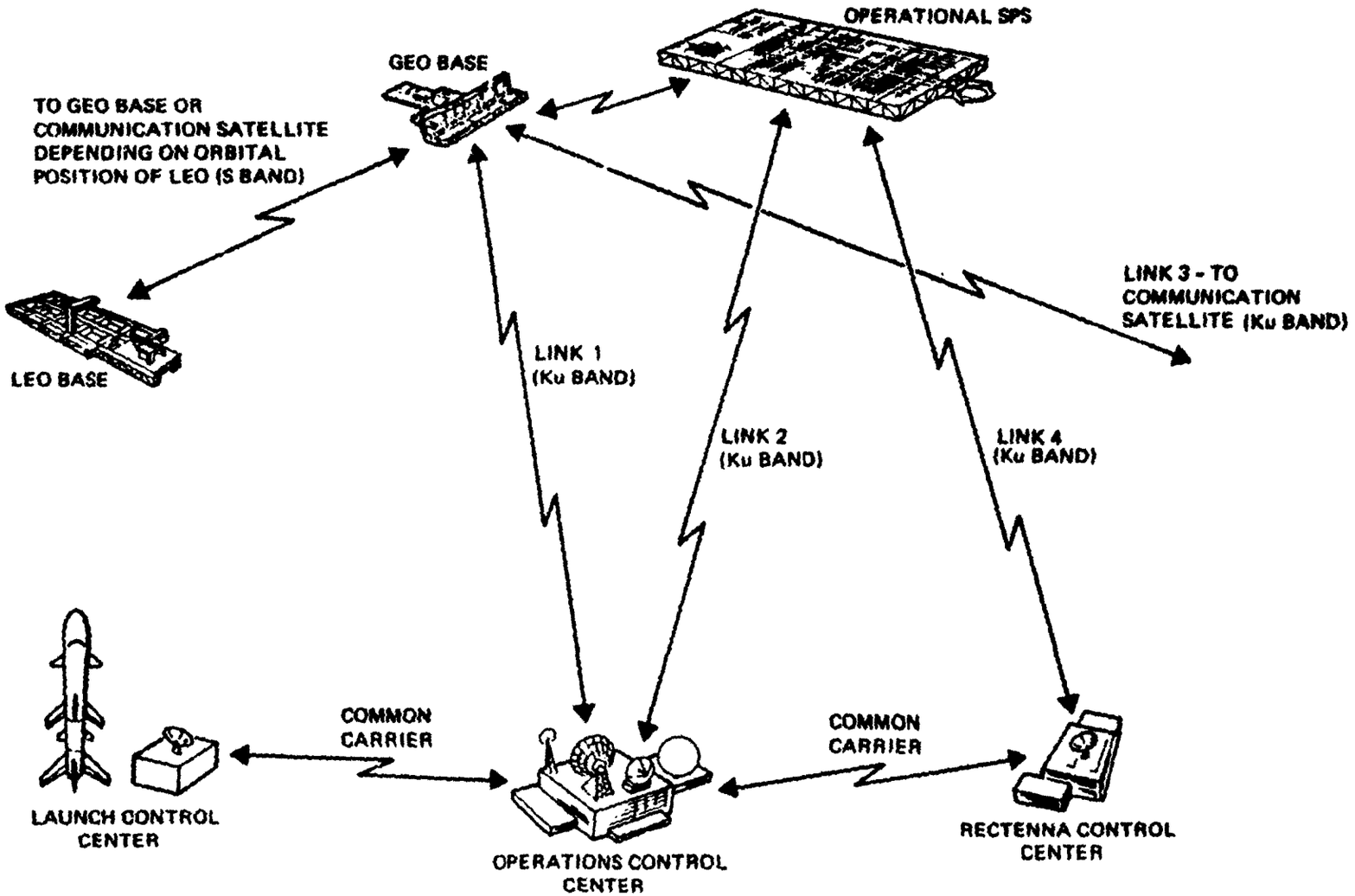

Figure 15-5. SPS Communications at CONUS

Link 2 is the Ku band command and control link from the OCC to each of the SPS's. In order to minimize the number of frequencies and amount of equipment required when the ultimate number of 60 satellites are deployed, it is planned to monitor each satellite periodically rather than continuously. In the event of an anomaly, a continuous monitoring and command capability would, of course, be available. It is also planned to utilize toroidal multiple-beam antennas, such as are currently being used in COMSAT terminals, to minimize the number of antennas.

Link 3 is the link from GEO to the relay satellites which carries all traffic from the CONUS to the non-geostationary elements. An RF link in the 60 GHz satellite crosslink band is recommended for this link which requires approximately 200 Mbps of duplex communication over a 40,000 nautical mile crosslink path. A laser link may prove to be a lighter and less expensive design in the time period of interest. Recent developments in reliable lasers for fiberoptic communication make it possible to design a laser communication link in the 890 nanometer band that will use reasonable sized optics. This will have some economic advantages in the cost of transportation to GEO, but will be of more advantage in decreasing the weight and complexity of the relay communication satellite.

Continuous communication with the system elements in low earth orbit is most economically provided by placing two communication relay satellites in geosynchrous orbit at locations where the line-of-sight communications path from GEO just misses the earth. Two satellites are required to avoid a communications gap of approximately 10% of the orbit in the very lowest orbits. Two satellites also provide additional system reliability. The normal communication path to any low-earth-orbit system element will be through GEO and one of the two relay satellites.

Link 4 is the link between the Rectenna Control Centers and the SPS's. The principal purpose of this link is to provide the RCC with information on the available power level of the SPS and a limited capability to control that power. A Ku-band link is used since the Ku capability on the satellite can also be used for Link 2. Also, this link will be pointed in or near the power beam and interference potential is very high.

The other links of the system which are links between vehicles or links between vehicles/bases and the relay satellite, are principally S-band. However, Ku-band has been used in those cases in which data rates or power beam interference considerations make it necessary. Special cases for S-band are the links for those vehicles requiring ranging and docking information. For these cases an S-band communication system similar to that used on the Shuttle payload link, plus a Ku-band radar system, also similar to that used on Shuttle is recommended.

All of the individual communication requirements are within the capability of the current Tracking and Data Relay Satellites with minor modifications to some channel bandwidths. The number of communications channels to be supported require a new satellite design, however. Using a laser or 60 Ghz crosslink for data communications to the low orbit system elements. More parabolic antennas will be required than are now on TDRS.

Table 15-10. SPS Communications Requirements and Implementation

FACT SHEET # 1

COMMUNICATIONS BETWEEN:

Operations Control Center (OCC) (WBS 1.5.1)
and
Launch/Recovery Control Center (LCC) (WBS 1.3.7.5)

DATA TRANSFER REQUIREMENT

OCC to LCC
- schedule for and permission to launch
- orbiter recovery ETA
- orbiter status
- booster flyback traffic, e.g., aircraft

LCC to OCC
- launch status
- orbiter handoff at separation

COMMUNICATIONS REQUIREMENTS

Two-way voice and low rate data (300 baud)

COMMUNICATIONS IMPLEMENTATION

Common carrier which exists at time

NOTES

- o LCC retains control of booster
- o Orbiter nominal stay in space is one day
- o Launch and Orbiter recovery operations may be concurrent

FACT SHEET # 2

COMMUNICATIONS BETWEEN:

Operations Control Center (OCC) (WBS 1.5.1)
and
LEO Base (WBS 1.2.2)

DATA TRANSFER REQUIREMENT

OCC to LEO Base	- 10 channels voice	C&C
	- 10^6 BPS data	C&C
	- 1 channel video	C&C
	- 4 channels audio	Entertainment
	- 4 channels TV	Entertainment
LEO Base to OCC	- 10 channels voice	C&C
	- 10^6 BPS data	C&C
	- 1 channel video	C&C

COMMUNICATIONS REQUIREMENTS

Voice	- SSB 5Khz
Data	- digital
Video & TV	- conventional commercial format
Audio	- FM stereo equivalent

NOTE: LEO base is in low earth orbit, not continuously in view of CONUS

COMMUNICATIONS IMPLEMENTATION

OCC to GEO, Link 1 (Ku)

GEO to COMSAT, Link 3 (Ku)

COMSAT to LEO, (Ku)

Return in opposite sequence

NOTES

- o Entertainment is interruptible and may be receivable from commercial COMSATS in GEO
- o C&C should be continuous coverage, at least voice
- o Can all be multiplexed on a microwave link

Table 15-10. SPS Communications Requirements and Implementation (Continued)

FACT SHEET # 3

COMMUNICATIONS BETWEEN:

Operations Control Center (OCC) (WBS 1.5.1)
and
GEO Base (WBS 1.2.1)

DATA TRANSFER REQUIREMENT

OCC to GEO Base	- 25 channels voice	C&C
	- 10^7 BPS data	C&C
	- 2 channels video	C&C
	- 4 audio and video entertainment	
GEO Base to OCC	- 25 channels voice	C&C
	- 10^7 BPS data	C&C
	- 2 channels video	C&C

COMMUNICATIONS REQUIREMENTS

Formats same as OCC-LEO Base

GEO Base is continuously in view of CONUS

COMMUNICATIONS IMPLEMENTATION

Two-way OCC direct to GEO, Link 1 (Ku)

NOTES

- o Can all be multiplexed on a microwave link

FACT SHEET # 4

COMMUNICATIONS BETWEEN:

Operations Control Center (OCC) (WBS 1.5.1)
and
Mobile Maintenance Base (MMB) (WBS 1.2.3.2)

DATA TRANSFER REQUIREMENT

OCC to MMB	- 10 channels voice	C&C
	- 10^6 BPS Data	C&C
	- 1 channel video	C&C
	- 4 channels audio and video entertainment	
MMB to OCC	- 10 channels voice	C&C
	- 10^6 BPS Data	C&C
	- 1 channel video	C&C

COMMUNICATIONS REQUIREMENTS

Formats same as OCC-LEO Base

In the later phases of the program, 2 or 3 MMB's may be in operation. MMB's maintaining U.S. Satellites will be in direct view of CONUS

COMMUNICATIONS IMPLEMENTATION

OCC to GEO, Link 1 (Ku)

GEO to MMB, (S)

NOTES

- o Potential use of MMB's to service non-U.S. SPS's not considered as a communications requirement.
- o SPS shutoff and reactivation coordinated with OCC. OCC is link to RCC; MMB does not talk directly to RCC.

Table 15-10. SPS Communications Requirements and Implementation (Continued)

FACT SHEET # 5

COMMUNICATIONS BETWEEN:

Operations Control Center (OCC) (WBS 1.5.1)
and
Solar Power Satellites (SPS's) (WBS 1.1)

DATA TRANSFER REQUIREMENT

OCC to SPS - data at 10^6 BPS

SPS to OCC - data at 10^7 BPS

COMMUNICATIONS REQUIREMENTS

SPS's are in direct view of CONUS. Up to 60 SPS's

SPS's may be close enough together that more than one can be in typical command uplink beam. In reference scenario, minimum separation may be 0.5°

COMMUNICATIONS IMPLEMENTATION

OCC direct to SPS's, Link 2 (Ku) toroidal antenas on ground

NOTES

- o Data rates stated are upper limits, e.g., under emergency conditions.
- o Normal rates will be a few KBPS. SPS onboard processing will report only anomalous conditions.

FACT SHEET # 6

COMMUNICATIONS BETWEEN:

Operations Control Center (OCC) (WBS 1.5.1)
and
Rectenna Control Center (RCC) (WBS 1.4.6)

DATA TRANSFER REQUIREMENT

Voice and low rate data (each way) for coordination of SPS control

COMMUNICATIONS REQUIREMENTS

Voice and low rate data

Up to 60 RCC's

COMMUNICATIONS IMPLEMENTATION

Common carrier which exists at time

NOTES

- o RCC controls SPS power output except that OCC can effect emergency shutdown.
- o OCC controls all other aspects of SPS flight
- o OCC provides occulation schedules
- o OCC and RCC's coordinate maintenance schedules and operations

Table 15-10. SPS Communications Requirements and Implementation (Continued)

FACT SHEET # 7

COMMUNICATIONS BETWEEN:

Operations Control Center (OCC) (WBS 1.5.1)
and
Personnel Launch Vehicle (PLV) (WBS 1.3.3)

DATA TRANSFER REQUIREMENT

OCC to PLV
- space traffic advisories
- rendezvous navigation updates
- recovery updates
- assistance as needed

PLV to OCC
- mission status
- anomaly or emergency reports

COMMUNICATIONS REQUIREMENTS

Voice and low rate data

About one PLV flight per week

COMMUNICATIONS IMPLEMENTATION

OCC to GEO, Link 1 (Ku)

GEO to COMSAT, Link 3 (Ku)

COMSAT to PLV, (S)

Return in opposite sequence

NOTES

- o LCC retains control of booster
- o Orbiter nominal stay in space is two days

FACT SHEET # 8

COMMUNICATIONS BETWEEN:

Operations Control Center (OCC) (WBS 1.5.1)
to
Heavy Lift Launch Vehicle (HLLV) (WBS 1.3.1)

DATA TRANSFER REQUIREMENT

OCC to HLLV
- space traffic advisories
- rendezvous navigation updates
- recovery updates
- assistance as needed

HLLV to OCC
- mission status
- anomaly or emergency reports

COMMUNICATIONS REQUIREMENTS

Voice and low rate data

One HLLV flight per day (occasionally two)

COMMUNICATIONS IMPLEMENTATION

OCC to GEO, Link 1 (Ku)

GEO to COMSAT, Link 3 (Ku)

COMSAT to HLLV, (S)

Return in opposite sequence

NOTES

- o Launch and recovery operations may be concurrent
- o Orbiter nominal stay in space is one day
- o LCC retains control of booster

Table 15-10. SPS Communications Requirements and Implementation (Continued)

FACT SHEET # 9

COMMUNICATIONS BETWEEN:

Operations Control Center (OCC) (WBS 1.5.1)
and
Electric Orbit Transfer Vehicle (EOTV) (WBS 1.3.2)

DATA TRANSFER REQUIREMENT

OCC to EOTV - 10^4 BPS data

EOTV to OCC - 10^6 BPS data

COMMUNICATIONS REQUIREMENTS

About 20 EOTV's in transit at one time at beginning of program and 25 when 60 satellites are in orbit.

EOTV's near LEO have short (≈2 week) orbit life if uncontrolled. EOTV status when near LEO should be continuously monitored (≈5 vehicles). Otherwise can be mostly autonomous.

COMMUNICATIONS IMPLEMENTATION

OCC to GEO, Link 1 (Ku)

GEO to COMSAT, Link 3 (Ku)

COMSAT to EOTV, (Ku)

Return in opposite sequence

NOTES

- o EOTV up trip ≈180 days - - down trip ≈ 40 days
- o Thruster plasmas may cause EMI.

FACT SHEET # 10

COMMUNICATIONS BETWEEN:

Operations Control Center (OCC) (WBS 1.5.1)
and
Personnel Orbit Transfer Vehicle (POTV) (WBS 1.3.4)

DATA TRANSFER REQUIREMENT

OCC to POTV - voice and 10^4 BPS data

POTV to OCC - voice and 10^6 BPS data

COMMUNICATIONS REQUIREMENTS

Normally only one POTV in transit at one time (could be two)

COMMUNICATIONS IMPLEMENTATION

OCC to GEO, Link 1 (Ku)

GEO to COMSAT, Link 3 (Ku)

COMSAT to POTV, (S)

Return in opposite sequence

NOTES

- o POTV trip time is ≈ one day each way.

Table 15-10. SPS Communications Requirements and Implementation (Continued)

FACT SHEET # 11

COMMUNICATIONS BETWEEN:

Operations Control Center (OCC) (WBS 1.5.1)
and
Maintenance Sortie Supply OTV (MSS-OTV) (WBS 1.3.3)

DATA TRANSFER REQUIREMENT

OCC to MSS-OTV	-	voice and 10^4 BPS data for navigation and traffic control
MSS-OTV to OCC	-	voice and 10^5 BPS data for mission and vehicle status

COMMUNICATIONS REQUIREMENTS

MSS-OTV's will be in continuous view of CONUS

COMMUNICATIONS IMPLEMENTATION

OCC to GEO, Link 1 (Ku)

GEO to MSS-OTV, (S)

Return in opposite sequence

NOTES

- o MSS-OTV's deliver spares and parts for refurbishment between SPS's and GEO Base

FACT SHEET # 12

COMMUNICATIONS BETWEEN:

Launch Control Center (LCC) (WBS 1.3.7.5)
and
LEO Base (WBS 1.2.2)

DATA TRANSFER REQUIREMENT

Normally no requirement.

In the event of problems with HLLV or PLV orbiters, direct communication may be required to set up emergency recovery procedures.

COMMUNICATIONS REQUIREMENTS

Two-way voice

Can be relayed if necessary

COMMUNICATIONS IMPLEMENTATION

LCC to OCC, common carrier
OCC to GEO, Link 1 (Ku)
GEO to COMSAT, Link 3 (Ku)
COMSAT to LEO, (S)
Return in opposite sequence

NOTES

Table 15-10. SPS Communications Requirements and Implementation (Continued)

FACT SHEET # 13

COMMUNICATIONS BETWEEN:

Launch Control Center (LCC) (WBS 1.3.7.5)
and
Personnel Launch Vehicle (PLV) (WBS 1.3.3)

DATA TRANSFER REQUIREMENT

LCC to PLV	-	voice and 10^4 BPS data
PLV to LCC	-	voice and 10^6 BPS data

COMMUNICATIONS REQUIREMENTS

Prelaunch, launch through staging; booster entry and recovery, orbiter terminal recovery

All line-of-sight

COMMUNICATIONS IMPLEMENTATION

NOTES

- o LCC hands off orbiter to OCC after staging

FACT SHEET # 14

COMMUNICATIONS BETWEEN:

Launch Control Center (LCC) (WBS 1.3.7.5)
and
Heavy Lift Launch Vehicle (HLLV) (WBS 1.3.1)

DATA TRANSFER REQUIREMENT

LCC to HLLV	-	voice and 10^4 BPS data
HLLV to LCC	-	voice and 10^6 BPS data

COMMUNICATIONS REQUIREMENTS

Prelaunch, launch through staging; booster entry and recovery, orbiter terminal recovery

All line-of-sight

COMMUNICATIONS IMPLEMENTATION

Two-way direct link LCC to PLV, (S)

NOTES

- o LCC hands off orbiter to OCC after staging

Table 15-11. SPS Communications Requirements and Implementation (Continued)

FACT SHEET # 15

COMMUNICATIONS BETWEEN:

LEO Base (WBS 1.2.2)

GEO Base (WBS 1.2.1)

DATA TRANSFER REQUIREMENT

Normally not required

- occasionally voice for coordination of EOTV or POTV maintenance problems
- GEO Base may serve as relay to LEO Base (Earth occults about 40 minutes of typical LEO Base orbit as seen from GEO)

COMMUNICATIONS REQUIREMENTS

Two-way voice

COMMUNICATIONS IMPLEMENTATION

LEO to COMSAT, (Ku)

COMSAT to GEO, Link 3 (Ku)

Return in opposite sequence

NOTES

FACT SHEET # 16

COMMUNICATIONS BETWEEN:

LEO Base (WBS 1.2.2)
and
Personnel Launch Vehicle (PLV) (WBS 1.3.3)

DATA TRANSFER REQUIREMENT

Rendezvous and docking coordination and ranging when PLV orbiter is within 1000 km of LEO Base

COMMUNICATIONS REQUIREMENTS

Voice and ranging data

COMMUNICATIONS IMPLEMENTATION

Two-way LEO direct to PLV (S)

Radar in PLV (Ku)

NOTES

o LEO Base has approach (departure control authority)

Table 15-10. SPS Communications Requirements and Implementation (Continued)

FACT SHEET # 17

COMMUNICATIONS BETWEEN:

LEO Base (WBS 1.2.2)
and
Heavy Lift Launch Vehicle (HLLV) (WBS 1.3.1)

DATA TRANSFER REQUIREMENT

Rendezvous and docking coordination and ranging when PLV orbiter is within 1000 km of LEO Base

COMMUNICATIONS REQUIREMENTS

Voice and ranging data

COMMUNICATIONS IMPLEMENTATION

Two-way LEO direct to HLLV (S)

Radar in HLLV (ku)

NOTES

- LEO Base has approach (departure control authority)

FACT SHEET # 18

COMMUNICATIONS BETWEEN:

LEO Base (WBS 1.2.2)
and
Electric Orbit Transfer Vehicle (EOTV) (WBS 1.3.2)

DATA TRANSFER REQUIREMENT

LEO Base to EOTV - 10^4 BPS data

EOTV to LEO Base - 10^5 BPS data

When EOTV is within 1000 km of LEO Base for approach/rendezvous control, stationkeeping and departure control.

COMMUNICATIONS REQUIREMENTS

May be more than one EOTV under approach, stationkeeping, or departure control.

COMMUNICATIONS IMPLEMENTATION

Two-way LEO direct to EOTV, (S)

NOTES

- LEO Base retains approach/departure control authority
- Orbit Transfer Flight control is handled by OCC

Table 15-10. SPS Communications Requirements and Implementation (Continued)

FACT SHEET # 19

COMMUNICATIONS BETWEEN:

LEO Base (WBS 1.2.2)
and
Personnel Orbit Transfer Vehicle (POTV) (WBS 1.3.4)

DATA TRANSFER REQUIREMENT

LEO Base to POTV - voice and 10^4 BPS data
POTV to LEO Base - voice and 10^5 BPS data

Approach, docking and departure control when POTV is within 1000 km of LEO Base

COMMUNICATIONS REQUIREMENTS

Up to two vehicles

COMMUNICATIONS IMPLEMENTATION

Two-way LEO direct to POTV, (S)
Radar in POTV (Ku)

NOTES

- o LEO Base retains approach and departure control authority
- o Hands off vehicle to OCC for major maneuvers

FACT SHEET # 20

COMMUNICATIONS BETWEEN:

LEO Base (WBS 1.2.2)
and
Cargo Tug (WBS 1.3.6)

DATA TRANSFER REQUIREMENT

Two-way voice and 10^4 BPS data

COMMUNICATIONS REQUIREMENTS

Tug is always within 100 km of base

Tug operations are frequent - will require dedicated channel

COMMUNICATIONS IMPLEMENTATION

Two-way LEO direct to Tugs, (S)

NOTES

- o Tug moves payloads between EOTV and base and around base if necessary.
- o LEO and GEO Bases each have one or more local tugs. LEO Base communicates only with its local tugs; same for GEO Base.

Table 15-10. SPS Communications Requirements and Implementation (Continued)

FACT SHEET # 21

COMMUNICATIONS BETWEEN:

GEO Base (WBS 1.2.1)
and
Mobile Maintenance Base (MMB) (WBS 1.2.3.2)

DATA TRANSFER REQUIREMENT

Two-way voice and 10^4 BPS data

GEO Base and MMB are always line-of-sight up to two MMB's

COMMUNICATIONS REQUIREMENTS

GEO Base to MMB	-	approach and departure control
	-	mission and workload coordination
MMB to GEO Base	-	mission and workload coordination

COMMUNICATIONS IMPLEMENTATION

Two-way GEO direct to MMB, (S)

NOTES

- o OCC is prime mission control authority
- o This link is primarily for spares and repair, workload coordination and approach and departure control
- o MMB and its MSS-OTV are in operation concurrently

SPS COMMUNICATIONS REQUIREMENT

FACT SHEET # 22

COMMUNICATIONS BETWEEN:

GEO Base (WBS 1.2.1)
and
SPS's (WBS 1.1)

DATA TRANSFER REQUIREMENT

Two-way data up to 10^6 BPS

Assume GEO Base communicates with no more than two SPS's simultaneously

Always line-of-sight

COMMUNICATIONS REQUIREMENTS

Ordinarily not required

Occasionally, GEO Base may want to read out SPS failure or degradation status to coordinate maintenance mission operations. Also can provide backup to OCC for SPS flight control.

COMMUNICATIONS IMPLEMENTATION

Two-way GEO direct to SPS's, (Ku)

NOTES

Table 15-10. SPS Communications Requirements and Implementation (Continued)

FACT SHEET # 23

COMMUNICATIONS BETWEEN:

GEO Base (WBS 1.2.1)
and
Electric Orbit Transfer Vehicle (EOTV) (WBS 1.3.2)

DATA TRANSFER REQUIREMENT

GEO Base to EOTV - 10^4 BPS data

EOTV to GEO Base - 10^5 BPS data

When EOTV is within 1000 km of GEO Base for approach/rendezvous control, stationkeeping and departure control.

COMMUNICATIONS REQUIREMENTS

May be more than one EOTV under approach, stationkeeping, or departure control.

COMMUNICATIONS IMPLEMENTATION

Two-way GEO direct to EOTV, (S)

NOTES

- o GEO Base retains approach/departure control authority
- o Orbit Transfer Flight control is handled by OCC

FACT SHEET # 24

COMMUNICATIONS BETWEEN:

GEO Base (WBS 1.2.1)
and
Personnel Orbit Transfer Vehicle (POTV) (WBS 1.3.4)

DATA TRANSFER REQUIREMENT

GEO Base to POTV - voice and 10^4 BPS data

POTV to GEO Base - voice and 10^5 BPS data

Approach, docking and departure control when POTV is within 1000 km of GEO Base

COMMUNICATIONS REQUIREMENTS

Up to two vehicles

COMMUNICATIONS IMPLEMENTATION

Two-way GEO direct to POTV, (S)

NOTES

- o GEO Base retains approach and departure control authority
- o Hands off vehicle to OCC for major maneuvers

Table 15-10. SPS Communications Requirements and Implementation (Continued)

FACT SHEET # 25

COMMUNICATIONS BETWEEN:

GEO Base (WBS 1.2.1)
and
Cargo Tug (WBS 1.3.6)

DATA TRANSFER REQUIREMENT

Two-way voice and 10^4 BPS data

COMMUNICATIONS REQUIREMENTS

Tug is always within 100 km of base

Tug operations are frequent - will require dedicated channel

COMMUNICATIONS IMPLEMENTATION

Two-way GEO direct to Tugs, (S)

NOTES

- o Tug moves payloads between EOTV and base and around base if necessary
- o GEO and LEO Bases each have one or more local tugs. GEO Base communicates only with its local tugs; same for LEO Base.

FACT SHEET # 26

COMMUNICATIONS BETWEEN:

GEO Base (WBS 1.2.1)
and
Maintenance Sortie Supply OTV (MSS-OTV) (WBS 1.3.4)

DATA TRANSFER REQUIREMENT

Two-way voice and 10^4 BPS data

GEO Base and MMB are always line-of-sight up to two MMB's

COMMUNICATIONS REQUIREMENTS

GEO Base to MMB	-	approach and departure control
	-	mission and workload coordination
MMB to GEO Base	-	mission and workload coordination

COMMUNICATIONS IMPLEMENTATION

Two-way GEO direct to MSS-OTV, (S)

NOTES

- o OCC is prime mission control authority
- o This link is primarily for spares and repair, workload coordination and approach and departure control
- o MMB and its MSS-OTV are in operation concurrently

Table 15-10. SPS Communications Requirements and Implementation (Continued)

FACT SHEET # 27

COMMUNICATIONS BETWEEN:

Mobile Maintenance Base (MMB) (WBS 1.2.3.2)
and
Solar Power Satellites (SPS's) (WBS 1.1)

DATA TRANSFER REQUIREMENT

SPS to MMB - systems status and safing data

MMB to SPS - system flight control, safing, configuration control immediately before, during, and immediately after maintenance session

COMMUNICATIONS REQUIREMENTS

Two-way data up to 10^6 BPS

Short range 250 km

COMMUNICATIONS IMPLEMENTATION

Two-way MMB direct to SPS, (S)

NOTES

- could use same SPS communication equipment as for GEO Base/SPS (fact sheet #22)

FACT SHEET # 28

COMMUNICATIONS BETWEEN:

Mobile Maintenance Base (MMB) (WBS 1.2.3.2)
and
Maintenance Supply Sortie OTV (MSS-OTV) (WBS 1.3.4)

DATA TRANSFER REQUIREMENT

Mission and workload coordination

COMMUNICATIONS REQUIREMENTS

Two-way voice and 10^4 BPS data

Always line-of-sight

COMMUNICATIONS IMPLEMENTATION

Two-way MMB direct to MSS-OTV (S)

NOTES

- MMB and MSS-OTV work together to effect maintenance operations. MMB carries crews and MSS-OTV carries spares and returns failed units for repair
- OCC retains prime mission and control authority

Table 15-10. SPS Communications Requirements and Implementation (Continued)

FACT SHEET # 29

COMMUNICATIONS BETWEEN:

Solar Power Satellites (WBS 1.1)
and
Rectenna Control Center (WBS 1.4.6)

DATA TRANSFER REQUIREMENT

SPS to RCC
- problem alerts
- available power level

RCC to SPS
- power output control
- normal and emergency shutdown/restart

COMMUNICATIONS REQUIREMENTS

Two-way data $\approx 10^4$ BPS

COMMUNICATIONS IMPLEMENTATION

Two-way SPS direct to RCC, Link 4 (Ku)

Use antenna isolation on uplinks

NOTES

- o Uplink can be multiplexed on phase control pilot beam
- o OCC retains SPS flight control authority and has emergency cutoff override authority
- o OCC has responsibility for SPS troubleshooting

FACT SHEET # 30

COMMUNICATIONS BETWEEN:

Personnel Launch Vehicle (PLV) (WBS 1.3.3)
and
Heavy Lift Launch Vehicle (HLLV) (WBS 1.3.1)

DATA TRANSFER REQUIREMENT

Two-way voice for pilot-to-pilot coordination

COMMUNICATIONS REQUIREMENTS

Two-way voice

Assume line-of-sight only and range ≤ 1000 km

COMMUNICATIONS IMPLEMENTATION

Two-way PLV direct to HLLV, (S)

NOTES

- o Similar to aircraft VHF
- o Up to 3 HLLV stages and 3 PLV stages can be in flight simultaneously
- o Could use common channel

Table 15-10. SPS Communications Requirements and Implementation (Continued)

FACT SHEET # 31

COMMUNICATIONS BETWEEN:

Personnel Launch Vehicle (PLV) (WBS 1.3.3)
and
Personnel Orbit Transfer Vehicle (POTV) (WBS 1.3.4)

DATA TRANSFER REQUIREMENT

Two-way voice for pilot-to-pilot coordination

COMMUNICATIONS REQUIREMENTS

Two-way voice

Assume line-of-sight only and range ≤1000 km

One or two POTV's

COMMUNICATIONS IMPLEMENTATION

Two-way direct PLV to POTV, (S)

NOTES

FACT SHEET # 32

COMMUNICATIONS BETWEEN:

Personnel Launch Vehicle (PLV) (WBS 1.3.3)
and
Cargo Tug (WBS 1.3.6)

DATA TRANSFER REQUIREMENT

Two-way voice for pilot-to-pilot coordination

COMMUNICATIONS REQUIREMENTS

Two-way voice

Assume line-of-sight only and range ≤1000 km

Up to two cargo tugs

COMMUNICATIONS IMPLEMENTATION

Two-way direct PLV to Tugs, (S)

NOTES

Table 15-10. SPS Communications Requirements and Implementation (Continued)

FACT SHEET # 33

COMMUNICATIONS BETWEEN:

Heavy Lift Launch Vehicle (HLLV) (WBS 1.3.1)
and
Personnel Orbit Transfer Vehicle (POTV) (WBS 1.3.4)

DATA TRANSFER REQUIREMENT

Two-way voice for pilot-to-pilot coordination

COMMUNICATIONS REQUIREMENTS

Two-way voice

Assume line-of-sight only and range ≤1000 km

COMMUNICATIONS IMPLEMENTATION

Two-way HLLV direct to POTV, (S)

NOTES

FACT SHEET # 34

COMMUNICATIONS BETWEEN:

Heavy Lift Launch Vehicle (HLLV) (WBS 1.3.1)
and
Cargo Tug (WBS 1.3.6)

DATA TRANSFER REQUIREMENT

Two-way voice for Pilot-to-pilot coordination

COMMUNICATIONS REQUIREMENTS

Two-way voice

Assume line-of-sight only and range ≤1000 km

COMMUNICATIONS IMPLEMENTATION

Two-way HLLV direct to Tugs, (S)

NOTES

Table 15-10. SPS Communications Requirements and Implementation (Continued)

FACT SHEET # 35

COMMUNICATIONS BETWEEN:

Electric Orbit Transfer Vehicle (EOTV) (WBS 1.3.2)
and
Cargo Tug (WBS 1.3.6)

DATA TRANSFER REQUIREMENT

Two-way data - 10^4 BPS
Short range - ≤ 10 km

COMMUNICATIONS REQUIREMENTS

EOTV to Cargo Tug - ranging and docking aids
Cargo Tug to EOTV - flight control as required to assist safe docking

COMMUNICATIONS IMPLEMENTATION

Two-way EOTV direct to Tugs, (S)

NOTES

FACT SHEET # 36

COMMUNICATIONS BETWEEN:

Personnel Orbit Transfer Vehicle (POTV) (WBS 1.3.4)
and
Cargo Tug (WBS 1.3.6)

DATA TRANSFER REQUIREMENT

Two-way voice for pilot-to-pilot coordination

COMMUNICATIONS REQUIREMENTS

Two-way voice

Assume line-of-sight only and range ≤1000 km

COMMUNICATIONS IMPLEMENTATION

Two-way POTV direct to Tugs, (S)

NOTES

Table 15-10. SPS Communications Requirements and Implementation (Continued)

FACT SHEET # 37

COMMUNICATIONS BETWEEN:

Cargo Tug (WBS 1.3.6)
and
Maintenance Supply Sortie OTV (MSS-OTV) (WBS 1.3.4)

DATA TRANSFER REQUIREMENT

Two-way voice
10^4 BPS data
Ranging
Short range 10 km

COMMUNICATIONS REQUIREMENTS

Ordinarily not required

Cargo Tug may occasionally perform cargo handling and transfer for MSS-OTV. In that case need two-way voice and ranging and docking aids.

COMMUNICATIONS IMPLEMENTATION

Two-way Tugs direct to MSS-OTV, (S)

NOTES

SECTION 16

RECTENNA CONSTRUCTION

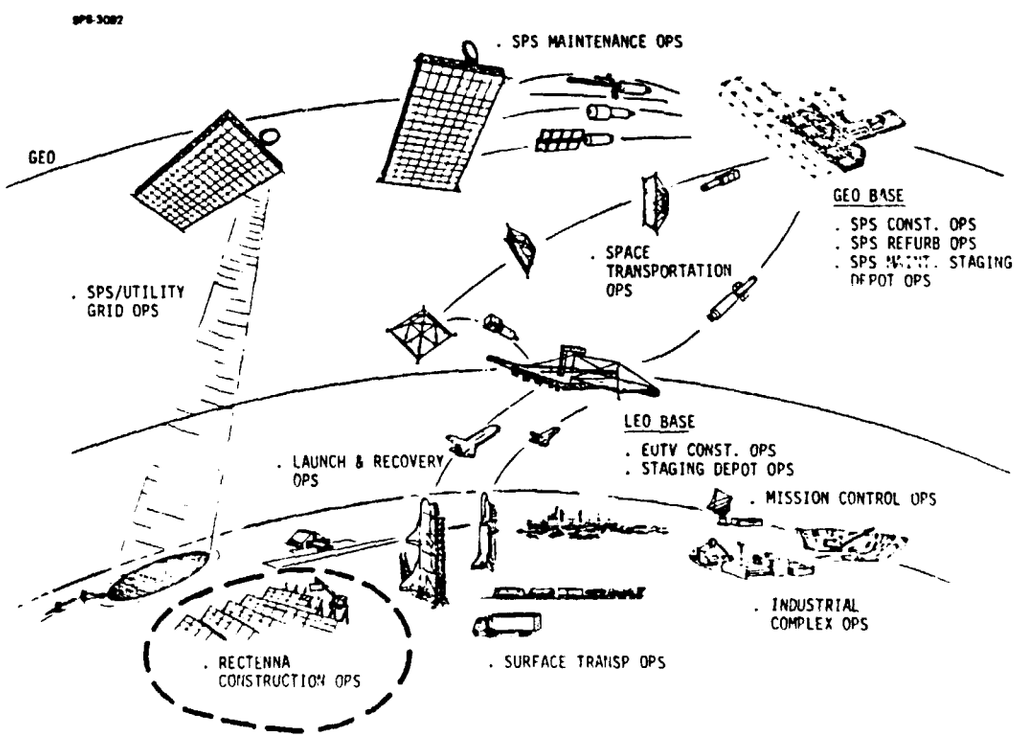

SECTION 16
RECTENNA CONSTRUCTION

During the early phases of this study, General Electric developed costs and construction schedules for one SPS ground system. The results were presented in the SPS Final Report (PART 4 - PHASE 1, April 1979). During this phase of the study GE investigated the equipment, crew sizes, costs and schedules to build two ground systems per year (the baseline). The tasks (1 to 4) described in this report are the same as the tasks described in the Phase 1 Report. In order to utilize the same crews and equipment year round (thus minimizing costs) each construction task is to last five months. (Task 4 and 5 take place in parallel) with one month to move the equipment between tasks. This requires a construction time of two years for the first ground system. Table 16-1 (Ground Systems Costs) shows the cost and crew size breakdown per task. The overall cost has increased from $1,990 (M) to $2,041 (M) in 1977 dollars. The reason is that in order to construct one ground system in 6 months some adjustments have to be made in individual task construction times, equipment and crew sizes.

Table 16-2 (Ground Systems Construction Cost & Schedule) shows the construction time per task. This particular schedule shows seven systems constructed in 5 years. The bottom part of the chart shows the total expenditure during the construction period. It can be seen that the cost increases slowly for the first 16 months of construction time for the first system, but then levels off to about a continuous $2 Billion per 6 months for the duration of the SPS Program.

TABLE 16-1

GROUND SYSTEM COSTS

TASK	DURATION (MONTHS)	CREW SIZE (FULL TIME MAN)	TOTAL COST (M$) (1977 DOLLARS)
(1) INITIAL SITE PREPARATION	5	144	***-3
(2) COMPLETE SITE PREPARATION	5	303	***-16
(3) STRUCTURE CONSTRUCTION	5	1026	310
(4) RECTENNA PANEL MANUFACTURE AND INSTALLATION	5	1240	1120
(5) GROUND POWER DISTRIBUTION INSTALLATION	*5	MINIMAL (INCLUDED IN COST)	630

**TOTAL COST: $2,041M

*Task (4) and (5) are conducted in parallel
**Total Ground Systems Cost excludes land cost
***Sale of logs more than offsets other site preparation costs (therefore a profit, i.e. negative cost)

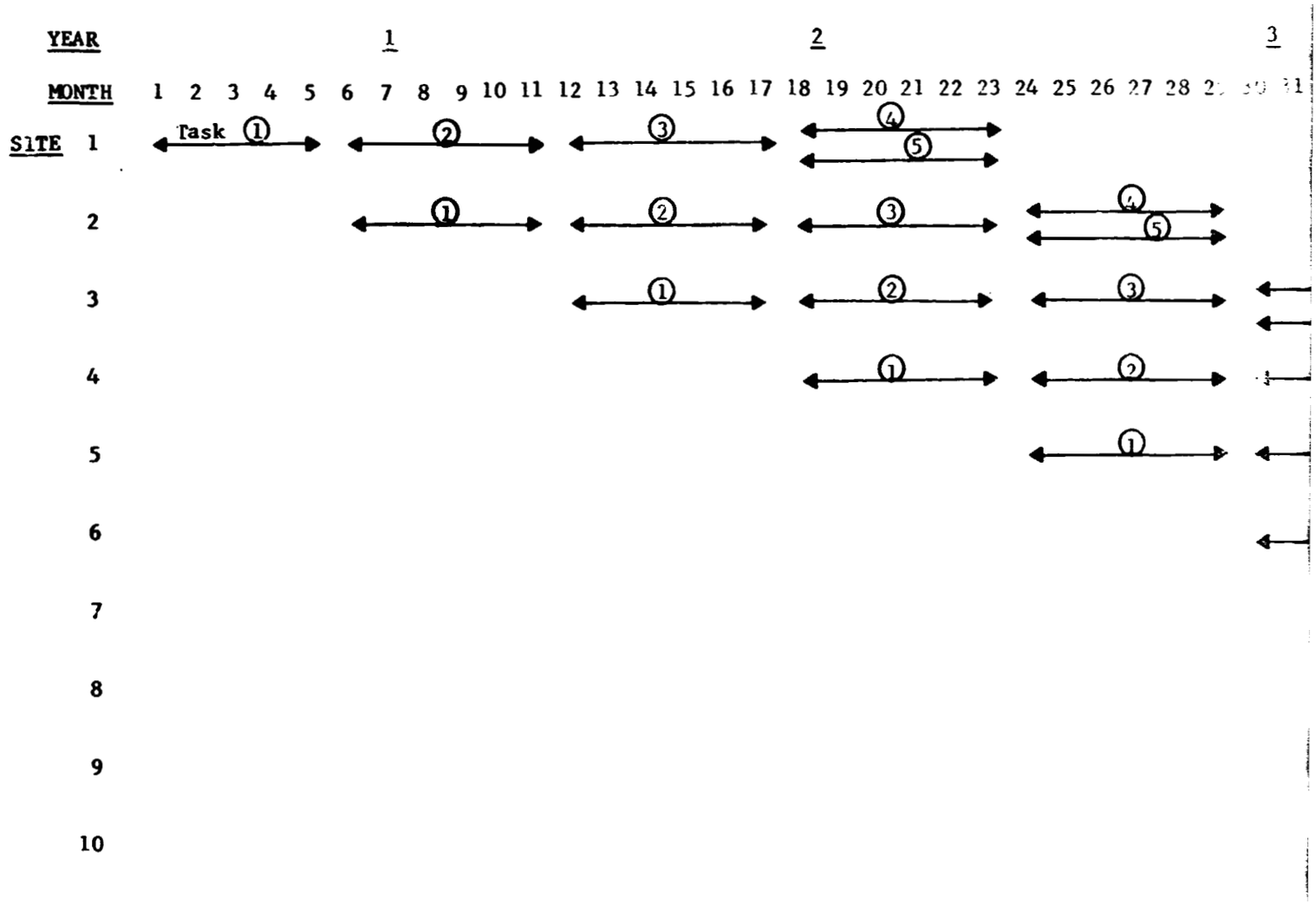
YEAR
1
2
3
MONTH
1 2 3 4 5 6 7 8 9 10 11 12 13 14 15 16 17 18 19 20 21 22 23 24 25 26 27 28
SITE
1
2
3
4
5
6
7
8
9
10
Task

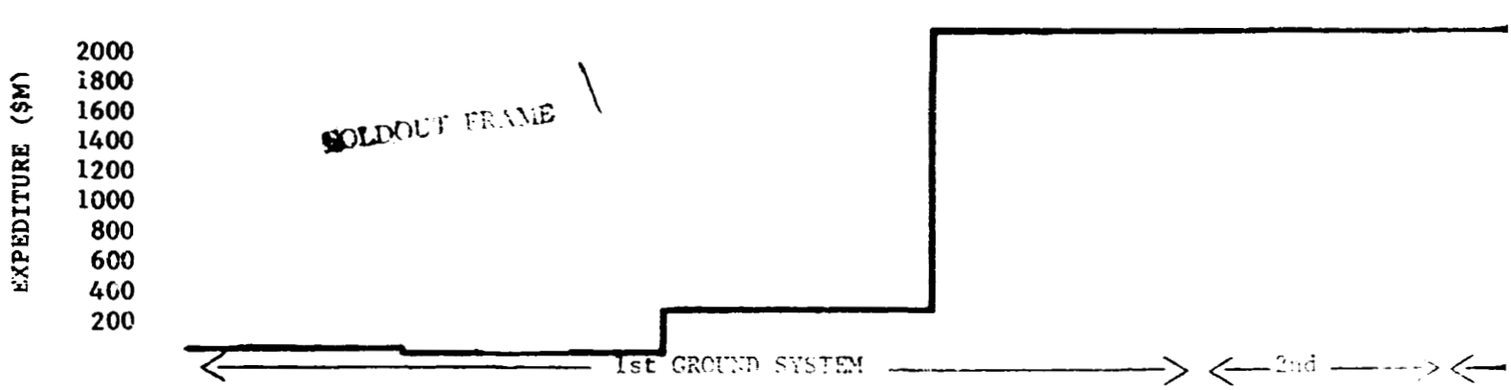
EXPEDITURE ($M)
2000
1800
1600
1400
1200
1000
800
600
400
200
SOLDOUT FRAME
1st GROUND SYSTEM
2nd

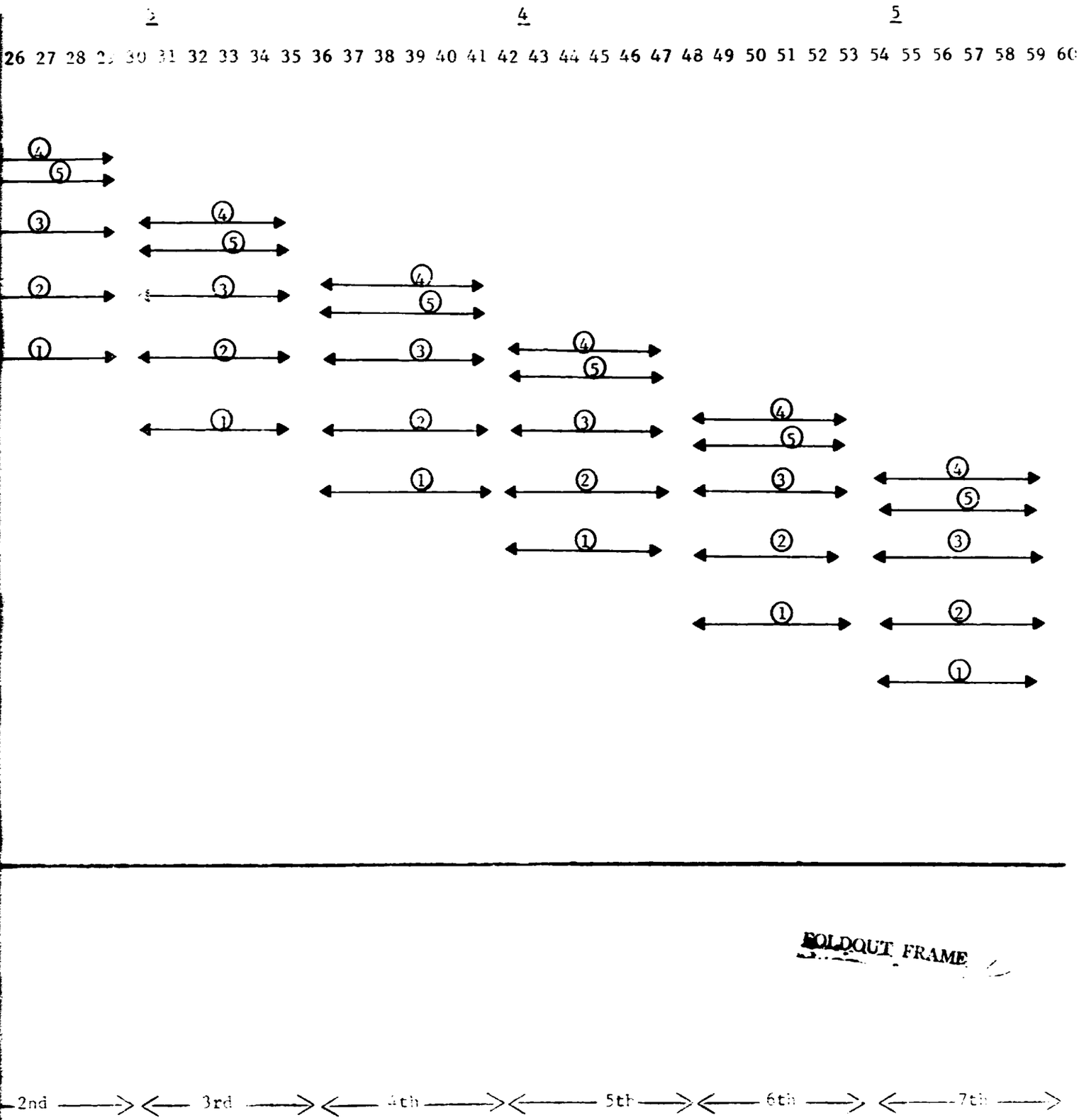

Table 16-2. Ground System Construction Cost and Schedule