NASA TM-81807

3 1176 00148 9294

NASA Technical Memorandum 81807

NASA-TM-81807 19800016610

SURFACE ACOUSTICAL INTENSITY MEASUREMENTS ON A DIESEL ENGINE

MICHAEL C. MCGARY AND MALCOLM J. CROCKER

APRIL 1980

FOR REFERENCE

NOT TO BE TAKEN FROM THIS ROOM

National Aeronautics and
Space Administration

Langley Research Center
Hampton, Virginia 23665

SURFACE ACOUSTICAL INTENSITY MEASUREMENTS ON A DIESEL ENGINE*

Michael C. McGary and Malcolm J. Crocker**
NASA Langley Research Center
Hampton, Virginia

SUMMARY

The use of surface intensity measurements as an alternative to the conventional selective-wrapping technique of noise source identification and ranking on diesel engines was investigated. A six-cylinder in-line, turbocharged, 350 horsepower diesel engine was used. Sound power was measured under anechoic conditions for eight separate parts of the engine at steady-state operating conditions using the conventional technique. Sound power measurements were repeated on five separate parts of the engine using the surface intensity technique at the same steady-state operating conditions. The results were compared by plotting sound power level against frequency, overall sound power level, and noise source rankings for the two methods. A specialized piston-tube experiment was developed to alleviate the phase shift problems encountered with the surface intensity method by earlier researchers. The results of the experiments demonstrate that the surface intensity method is a viable alternative to the selective-wrapping technique. Further experiments using the two-microphone acoustic intensity technique are being made for comparison with the surface intensity results.

INTRODUCTION

It is frequently desirable in an engineering noise reduction program on a machine to rank sources in order of importance. The fact that the ear responds to the sound pressure rather than the sound power radiated from a machine part is sometimes used to justify ranking using the sound pressure level measured at some point in space. However, since the sound field radiated by different machine parts can be quite directional and influenced by diffraction around the machine, particularly in narrow frequency bands, use of the sound pressure level in ranking machine noise causes problems. For these reasons and others including the fact that sound power level can more easily be used to calculate sound pressure level at given distances from a machine, indoors or outdoors, the use of sound power level rather than sound pressure level to rank noise sources on a machine should be preferred.

---

*The study performed herein was accomplished at the Ray W. Herrick Laboratories, Purdue University, West Lafayette, Indiana 47906. The study was supported by the Office of Noise Abatement and Control of the U.S. Environmental Protection Agency and the Cummins Engine Company.

**Professor of Mechanical Engineering, School of Mechanical Engineering, Purdue University, West Lafayette, Indiana 47906.

N80-25703

Ranking of noise sources in terms of sound power level has normally been accomplished by wrapping the machine in a lead-fiberglass combination and selectively exposing different parts. Unfortunately such an approach is slow, tedious, expensive, and not always accurate. The lead-fiberglass is difficult and time consuming to apply and seal properly and at low frequency gives misleading results because it has a poor transmission loss. Also it is necessary to use expensive acoustic facilities. Either a large anechoic room is needed if the sound power is obtained using a spherical traverse around the machine, or a reverberation room is needed for the reverberant room method.

Recent developments in electronic processing equipment of acoustic signals and the availability of Fast Fourier Transform computers which can process two or more signals simultaneously have made the measurement of the intensity of acoustic sources possible. Two methods of measuring the intensity of machine sources are currently under investigation. In one approach, surface intensity, the intensity on the surface of a vibrating part is determined at a number of points on the vibrating surface using a microphone and an accelerometer. By summing the intensity correctly over the surface of individual parts and correctly accounting for area, the sound power radiated by each part can be obtained. In another approach, acoustic intensity, the intensity is determined using two microphones at a number of points or continuously over an imaginary surface close to and enclosing the surface. The sound power is again obtained by integration over the enclosing surface.

Both intensity approaches have a number of advantages and disadvantages. It is noted, however, that both intensity approaches no longer need the time consuming lead-wrapping nor the special anechoic or reverberation room facilities. It is the purpose of this research to investigate the possibility and accuracy of using surface intensity measurements as an alternative to the conventional selective-wrapping technique of noise source identification and ranking on machines.

A 6-cylinder, in-line, turbocharged, 350 horsepower diesel engine was used as the machine source. Sound power was measured under anechoic conditions for eight separate parts of the engine at steady-state operating conditions using the conventional technique. Sound power measurements were repeated on five separate parts of the engine using the surface intensity technique at the same steady-state operating conditions. The results were compared by plotting sound power level against frequency, overall sound power level, and noise source rankings for the two methods. A specialized piston-tube experiment was developed to alleviate the phase shift problems encountered by earlier researchers with the surface intensity method. The results of the experiments demonstrate that the surface intensity method is a viable alternative to the selective-wrapping technique.

THE SURFACE INTENSITY APPROACH

Calculation of overall sound power via surface intensity is performed through the use of a single microphone and a single accelerometer. A typical arrangement of the microphone and accelerometer is shown in figure 1. With

this measurement technique, the particle velocity at the vibrating surface is obtained by integrating the accelerometer signal. The pressure signal from the microphone is then multiplied by the surface velocity signal to obtain the acoustic intensity. Several of these measurements are made at different points on the measurement surfaces and then the results are each multiplied by incremental surface areas and appropriately summed to obtain the total acoustic sound power radiated by the surface. The major assumptions in this technique are that the vibrating surface velocity is equal to the acoustic particle velocity and that the magnitude of the pressure wave does not vary significantly from the surface to the microphone which is a few millimeters away. (See figure 1.)

THEORY OF THE SURFACE INTENSITY METHOD

The surface acoustic intensity vector is:

$$\vec{I} = \langle p\, \vec{u}_n \rangle_t \tag{1}$$

where p is the instantaneous acoustic pressure, $\vec{u}_n$ is the instantaneous normal surface velocity, and $\langle\ \rangle_t$ represents the time averaged quantity of the product.

The acoustic power radiated from a vibrating surface is:

$$\Pi = \int_{c.s.} \vec{I} \cdot d\vec{A} \ , \tag{2}$$

where $\vec{I}$ is the acoustic intensity vector and $d\vec{A}$ is the product of a normal unit vector and an incremental area on the measurement surface. The integration can be made over any measurement surface which completely encloses the structural surface under investigation. It is a simple matter, once the intensity at various points on the vibrating surface is obtained, to estimate the total acoustic sound power radiated by the surface through a finite summation approximation of equation (2).

Ignoring any phase shift difficulties between pressure and velocity signals, it can be shown that the surface acoustic intensity at a point may be calculated from the pressure signal of the microphone, and the integrated signal of the accelerometer (see refs. 6 and 11) by:

$$I = \int_0^\infty C_{pu}(f)df \ , \tag{3}$$

where I is the acoustic intensity, $C_{pu}(f)$ is the real part of the one-sided cross spectral density between the pressure and velocity signals, and f is the frequency in hertz. Use of the velocity signal in this analysis, however, is rather inconvenient, since an analog integrator is

needed to integrate the signal produced by the accelerometer shown in figure 1. It is simpler to eliminate use of the velocity signal through mathematical techniques and use instead the acceleration signal. The equation for intensity, I, then becomes

$$I = (1/2\pi) \int_0^\infty (1/f)\ (Q_{pa})\ df\ , \tag{4}$$

where Q_{pa} is the imaginary portion of the one-sided cross spectral density between pressure and acceleration.

One should keep in mind that the analysis, so far, does not consider the effect of instrumentation phase shift. To include the phase shift between channels, $\emptyset$, introduced by the instrumentation requires a lengthy mathematical derivation (refs. 6 and 11). The final equation is:

$$I = (1/2\pi) \int_0^\infty (1/f)\ (Q_{pa} \cos \emptyset + C_{pa} \sin \emptyset) df\ , \tag{5}$$

where Q_{pa} is the imaginary part of the one-sided cross-spectral density between pressure and acceleration, C_{pa} is the real part of the one-sided cross-spectral density between pressure and acceleration, and $\emptyset$ is the instrumentation phase shift.

Further details of the theory of surface intensity measurements are given in references 6, 9, and 11. For a comprehensive study of the effect of instrumentation phase shift on measurement of intensity and how to correct for it using a piston-tube calibration technique, see reference 11. An illustration of the equipment used in calibrating the surface intensity technique is seen in figure 2.

THE ENGINE TEST FACILITY

The engine used in this research is a Cummins NTC-350 diesel engine. This engine (see fig. 3) is a four-stroke in-line six cylinder 350 HP engine.

The engine was mounted in the Herrick Laboratories semi-anechoic chamber. The ceiling and four walls of the room are lined with 0.76 m wedges of Owens Corning fiberglass making the room suitable for free-field measurements above approximately 125 Hz. The engine was mounted 2.03 m above the concrete floor of the chamber. This was done to reduce floor reflection effects in sound power measurements, and to provide easy access for microphones and other instrumentation under the engine. A General Electric model IG371 water-cooled inductor type dynamometer mounted in a separate room was used to load the engine. The engine was isolated from the floor with four airbag isolators. The engine was connected to the dynamometer by a 2.8 m shaft which had a support bearing equipped with a rubber vibration isolator. Engine accessories

such as the heat exchanger and fuel tank were removed from the sound field by covering them with fiberglass. Intake air was fed to the engine from the chamber and exhaust gases were piped out of the room. Reference 11 contains additional information on the test facility and the instrumentation used to monitor the engine. Baseline data on the engine such as horsepower, intake temperature, water and oil temperatures, exhaust and boost temperatures, fuel pressure and turbo speed were measured and tabulated for various engine speeds and loads [11]. Many preliminary sound pressure level experiments such as standard SAE J1074 measurements were performed on the engine [11].

THE LEAD-WRAPPED SOUND POWER MEASUREMENTS: TECHNIQUE AND RESULTS

Overall and one-third octave band sound power level measurements were performed on the bare engine and the fully lead-wrapped engine. For the measurements using lead-wrapping, the engine was enclosed completely in a single layer of foam-backed 8 mm thick lead. Care was taken to fit the lead as well as possible and all apparent gaps were sealed with duct tape and small pieces of lead. The lead was placed on the engine in many pieces in such a way, that later a particular surface, e.g., the oil pan, could be exposed.

Eight individual parts of the engine were chosen for noise source identification and ranking purposes using the measurement technique with a spherical microphone array and the engine lead-wrapped. The measurements were made by selectively exposing each of the eight parts, one at a time, while the other seven parts were encased in the foam-backed lead. Sound power level measurements were then made for each of the eight parts for three separate steady-state operating conditions. The eight engine parts chosen for examination were: (1) the oil pan, (2) the fuel and oil pumps, (3) the left block wall, (4) the right block wall, (5) the front of the engine, (6) the oil filter and oil cooler, (7) the aftercooler, and (8) the exhaust manifold and cylinder head. These parts were chosen primarily for reasons of ease in wrapping and unwrapping the engine. A sample of the results obtained is shown in the one-third octave band plot of figure 4, which compares the sound power of the engine in the fully lead-wrapped condition with the sound power of the exposed oil pan at the 1500 rpm and 542 N-m operating condition. Due to the small differences in the sound power levels between fully wrapped and unwrapped conditions at the lower frequencies, it is assumed that the lead-wrapping measurements are accurate on the oil pan only above 250 Hz. Similar sound power comparisons for the other four parts under investigation show that the lead-wrapping measurements are accurate on the aftercooler only above 400 Hz and on the oil filter and cooler, and the left and right block walls only above 1,000 Hz. Using these sound power results, a noise source ranking of the five parts was obtained and will be used later in this paper for comparison purposes with the results obtained using the surface intensity technique for the 315 Hz to 10 K Hz one-third octave bands.

SURFACE INTENSITY MEASUREMENTS ON THE ENGINE

Five separate parts of the engine were noise-source identified using the surface intensity measurement techniques for the steady-state operating condition of 1500 rpm and a load of 542 N-m.

The five parts chosen for investigation were: (1) the oil pan, (2) the aftercooler, (3) the left block wall, (4) the right block wall, and (5) the oil filter and cooler. The exhaust manifold and cylinder head were not investigated because of the intense heat radiated from these parts. The front of the engine was not examined either, since the pulleys there make it difficult to mount an accelerometer.

Twenty-four measurement points were taken on the oil pan. In areas where the geometry was more complicated (bends, etc.), more points were taken than in the simpler shaped areas which resembled flat plates. The points were chosen randomly inside the measurement area which they represented. Figure 5 shows a comparison of the one-third octave band sound power levels for the oil pan taken by the lead-wrapping method and the surface intensity technique. Good agreement is obtained above 250 Hz.

Since only five parts of the engine were investigated using the surface intensity technique, it was not possible to compare the sum of these sound power results with the sound power of the bare engine. It was possible, however, to make a one-third octave band comparison of sound power levels for the sum of the five parts measured with the lead-wrapping technique and the sum of the five parts using the surface intensity technique as shown in figure 6. The comparison is seen to be very good at and above the 500 Hz one-third octave band. Below this frequency, the unreliability of the lead-wrapping technique begins to become very evident.

Overall sound power levels for the 315 Hz to 4 K Hz one-third octave bands were calculated by the computer algorithms used to analyze the cross-spectral data produced by the surface intensity measurements. These overall sound power levels for the five parts under investigation are compared with the sound power levels for the same five parts obtained from the lead-wrapping measurements in the noise source ranking plot of figure 7. The ranking is essentially the same for both methods with the exception of the left block wall. The levels differ considerably for three of the parts. This is to be expected, however, since these parts' primary contribution to the overall noise is at frequencies of 1000 Hz or above. This fact caused the overall lead-wrapping sound power measurements for these parts to be over estimated since these measurements were unreliable in the 315 Hz to 1000 Hz frequency range.

CONCLUSIONS

The surface intensity method of sound power measurement has been proved to be a viable alternative to the lead-wrapping technique. The main advantages of the method are: (1) measurements can be made with the vibrating machine noise source "in situ;" (2) the measured results are as reliable, if not more

accurate particularly at low frequency, than the measured results obtained from the more conventional selective wrapping far-field techniques; (3) the measurements can be made in conjunction with an analysis of the structural vibration of the sound source, the intensity and vibration information can then be used to aid in noise reduction; and (4) with both a knowledge of the sound power and the mean square surface velocity, an estimate of the radiation efficiency of the surface can be made.

There are some problems and drawbacks with the surface intensity technique including: (1) the method can only be used on structure radiated sound, (2) noise radiated from rotating parts or high temperature parts cannot be easily measured, and (3) the method is somewhat slower than the continuous-traverse two-microphone or so-called acoustic intensity method.

REFERENCES

1. Baker, S.: "An Acoustic Intensity Meter." J. Acoust. Soc. Am. 27, No. 2, 269-273, 1955.

2. Schultz, T. J.: "Acoustic Wattmeter." J. Acoust. Soc. of Am., 28, No. 4, 639-699, 1956.

3. Fahy, F. J.: "Measurement of Acoustic Intensity Using the Cross-spectral Density of Two Microphone Signals." J. Acoust. Soc. Am., Vol. 62, No. 4, 1057-1059, 1977.

4. Chung, J. Y.; Pope, J.; and Feldmaier, D. A.: "Application of Acoustic Intensity Measurement to Engine Noise Evaluation." Proceedings of SAE Diesel Engine Noise Conference, paper 790502, 33 pp., 1979.

5. Hodgson, T.: "Investigation of the Surface Acoustical Intensity Method for Determining the Noise Sound Power of a Large Machine in situ." J. Acoust. Soc. Am., Vol. 61, No. 2, 1977.

6. Kaemmer, N.: "Sound Power Determination from Surface Intensity Measurements on a Cylinder." Master's Thesis, Purdue University, 1978. See also N. Kaemmer and M. J. Crocker: "Sound Power Determination from Surface Intensity Measurements on a Vibrating Cylinder." Proceedings 1979 National Conference on Noise Control Engineering, 1979, also submitted to Journal of the Acoustic Society of America.

7. Brito, J. D.: "Machinery Noise Source Analysis Using Surface Intensity Measurements." Noise-Con 79 Proceedings, Institute of Noise Control Engineering, Poughkeepsie, NY, 1979, pp. 137-142.

8. Czarnecki, S.; Engle, Z.; and Panuszka, R.: "Correlation Method of Measurements of Sound Power in Near-Field Conditions." Archives of Acoustics, Vol. 1, No. 3, pp. 201-203, 1976.

9. Brito, J. D.: "Sound Intensity Patterns for Vibrating Surfaces." PhD Thesis, M.I.T., 1976.

10. Trella, T.; Mason, R.; and Karsick, R.: "External Surface Noise Radiation Characteristics of Truck Diesel Engines - Their Far-Field Signatures and Factors Controlling Abatement." SAE paper 780174, 29 pp., 1978.

11. McGary, M. C.: "Noise Source Identification of Diesel Engines Using Surface Intensity Measurement." Master's Thesis, Purdue University, 1980.

12. Thompson, J. K.: "Evaluation of the Conventional and Acoustic Intensity Methods of Noise Source Identification for Small Internal Combustion Engines." PhD Thesis, Purdue University, 1979.

13. Bendat, J. S.; and Piersol, A. G.: "Random Data: Analysis and Measurement Procedures." John Wiley and Sons, Inc., New York, 1971.

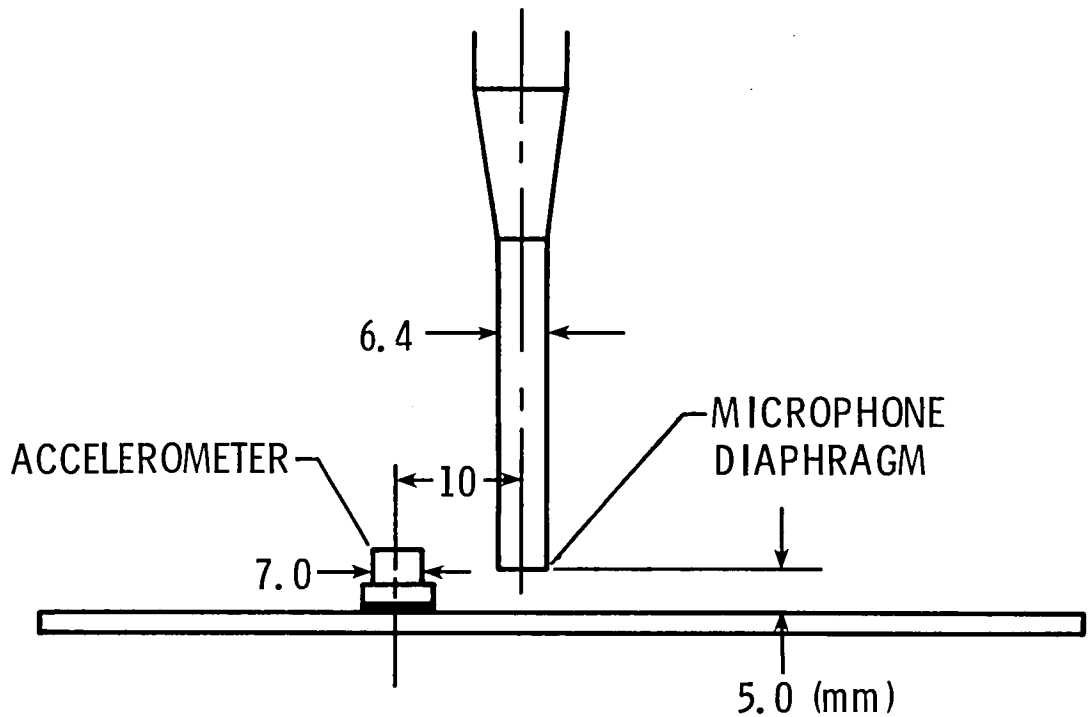

Figure 1.- Physical arrangement of the microphone and accelerometer.

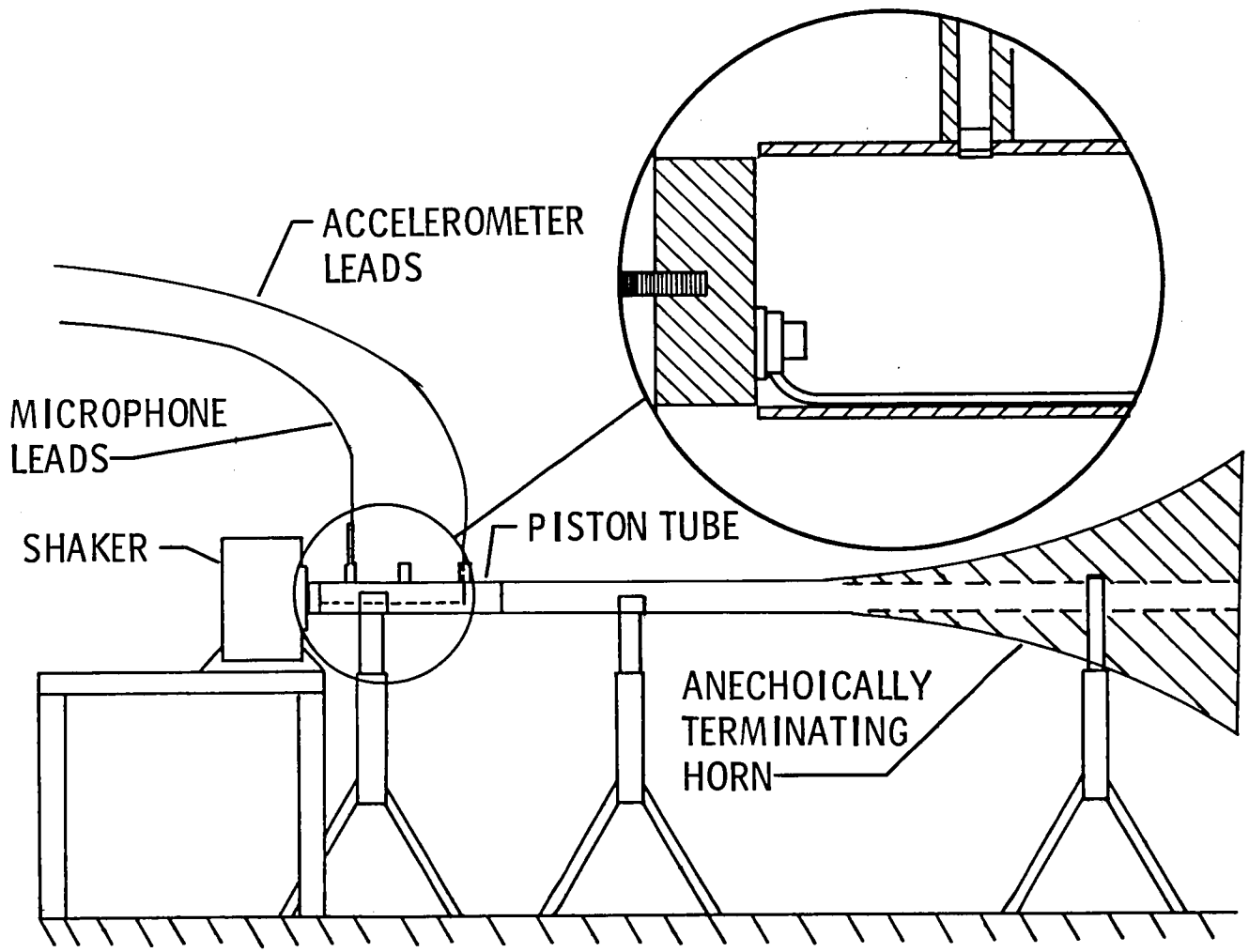

Figure 2.- Transducer arrangement for phase shift determination.

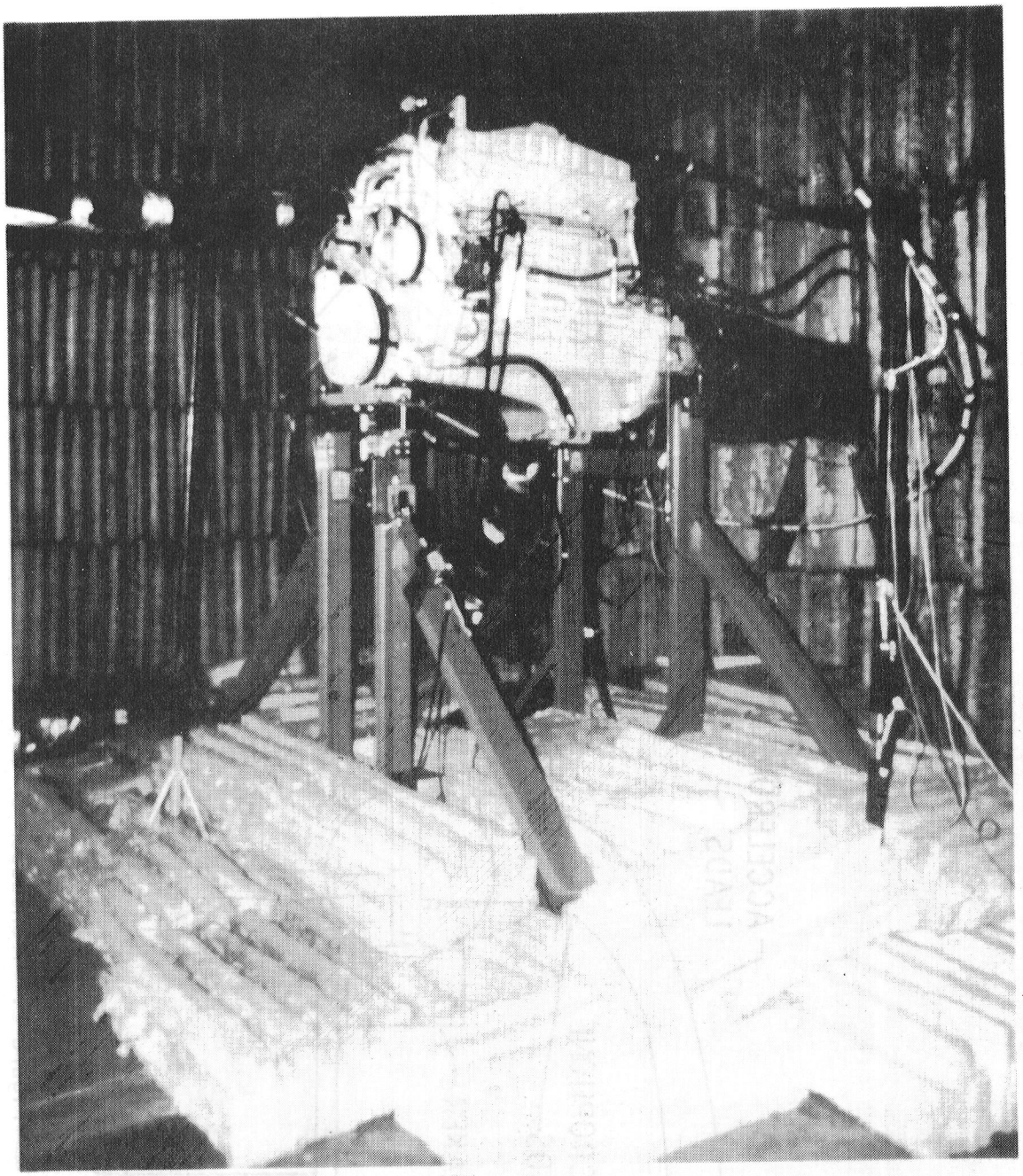

Figure 3.- Engine test facility.

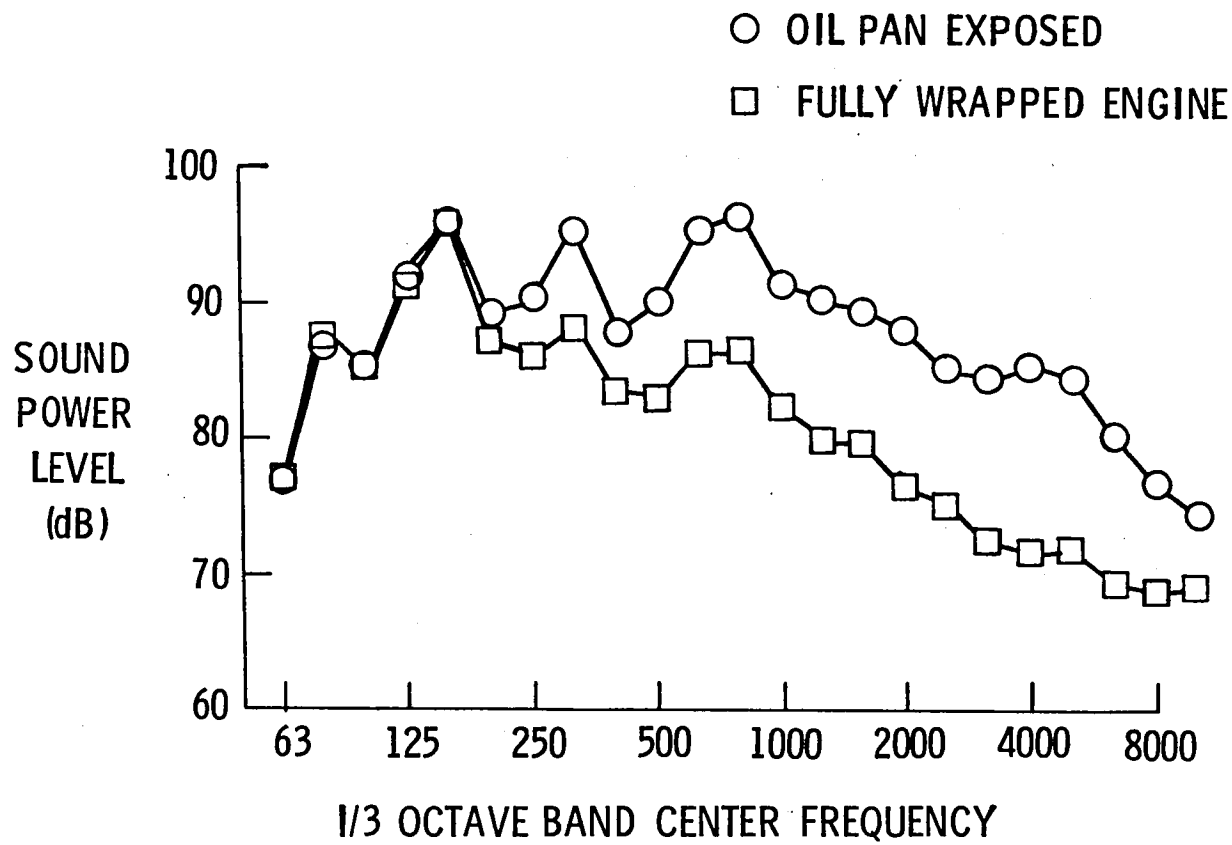

Figure 4.- Contribution of the oil pan.

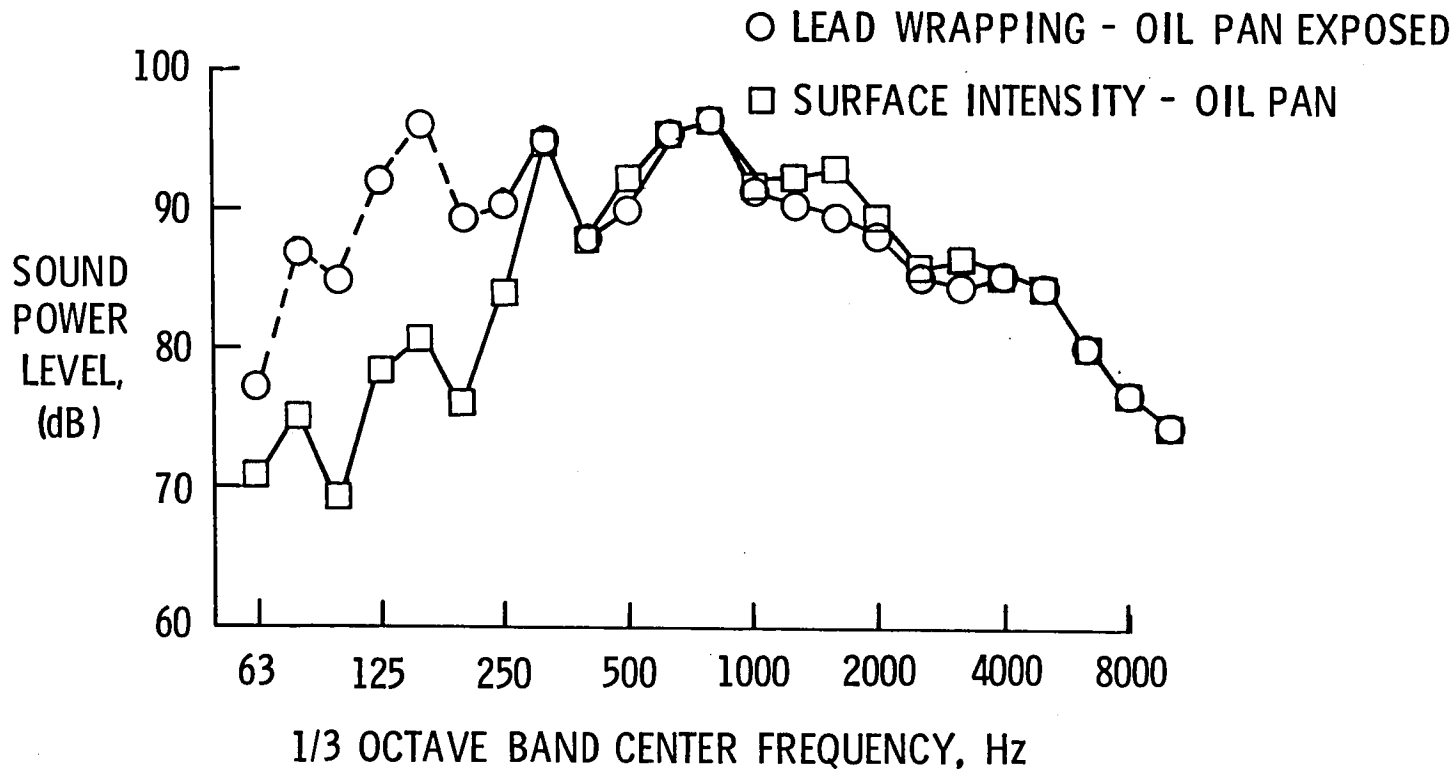

Figure 5.- Comparison of two methods--oil pan.

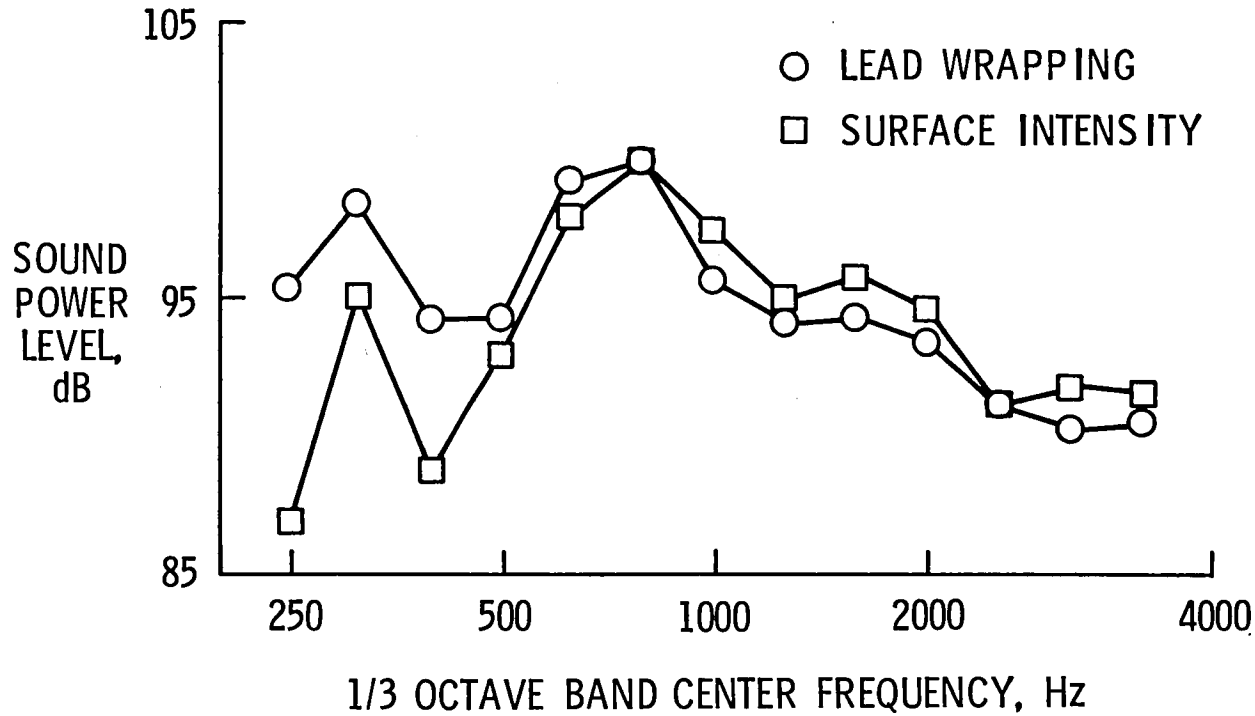

Figure 6.- Sum of engine parts.

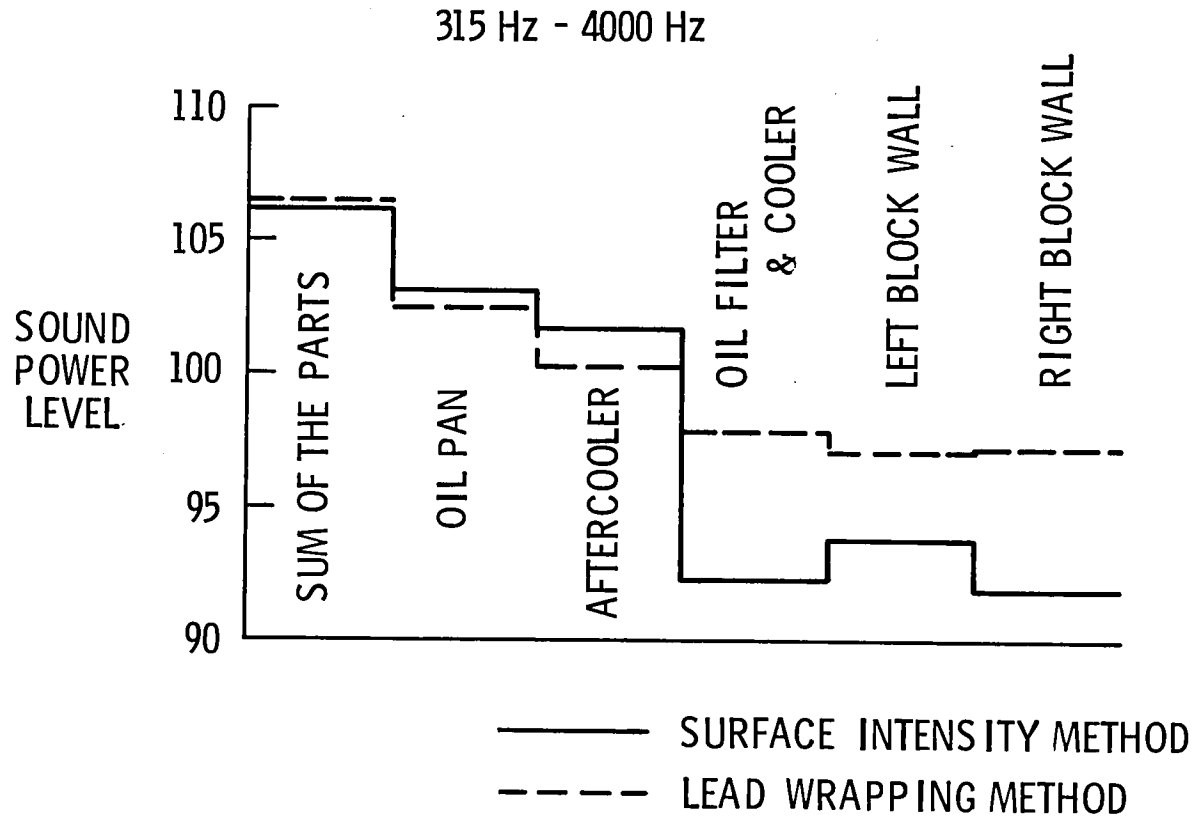

Figure 7.- Ranking of engine parts.

1. Report No.	2. Government Accession No.	3. Recipient's Catalog No.
NASA TM-81807		

4. Title and Subtitle	5. Report Date
SURFACE ACOUSTICAL INTENSITY MEASUREMENTS ON A DIESEL ENGINE	April 1980
	6. Performing Organization Code
*7. Author(s) Michael C. McGary and **Malcolm J. Crocker	8. Performing Organization Report No.
9. Performing Organization Name and Address NASA Langley Research Center, Hampton, Virginia 23665 and Ray W. Herrick Laboratories, Purdue University, West Lafayette, Indiana 47906	10. Work Unit No. 505-33-53-03
	11. Contract or Grant No.
12. Sponsoring Agency Name and Address National Aeronautics and Space Administration Washington, DC 20546 and Office of Noise Abatement and Control, U. S. Environmental Protection Agency and the Cummins Engine Company	13. Type of Report and Period Covered Technical Memorandum
	14. Army Project No.

15. Supplementary Notes **Purdue University, West Lafayette, Indiana 47906
*The senior author is now a member of the staff of the National Aeronautics and Space Administration, Langley Research Center, Hampton, Virginia 23665. Presented at the 99th Acoustical Society of America Meeting, April 21-25, 1980, Atlanta, Georgia.

16. Abstract

The use of surface intensity measurements as an alternative to the conventional selective-wrapping technique of noise source identification and ranking on diesel engines was investigated. A six-cylinder, in-line, turbocharged, 350 horsepower diesel engine was used. Sound power was measured under anechoic conditions for eight separate parts of the engine at steady-state operating conditions using the conventional technique. Sound power measurements were repeated on five separate parts of the engine using the surface intensity technique at the same steady-state operating conditions. The results were compared by plotting sound power level against frequency and noise source rankings for the two methods.

17. Key Words (Suggested by Author(s))	18. Distribution Statement
Surface intensity measurements, Diesel engines, Sound power measurements	Unclassified - Unlimited Subject Category 71

19. Security Classif. (of this report)	20. Security Classif. (of this page)	21. No. of Pages	22. Price*
Unclassified	Unclassified	16	$4.00

*For sale by the National Technical Information Service, Springfield, Virginia 22161