N O T I C E

THIS DOCUMENT HAS BEEN REPRODUCED FROM MICROFICHE. ALTHOUGH IT IS RECOGNIZED THAT CERTAIN PORTIONS ARE ILLEGIBLE, IT IS BEING RELEASED IN THE INTEREST OF MAKING AVAILABLE AS MUCH INFORMATION AS POSSIBLE

9950-355

RECEIVED
NASA STI FACILITY
ACCESS DEPT.

JET PROPULSION LABORATORY

CALIFORNIA INSTITUTE OF TECHNOLOGY

PASADENA, CALIFORNIA

(NASA-CR-163034) THE NEAR-TERM HYBRID VEHICLE PROGRAM, PHASE 1 Final Report (South Coast Technology, Inc.) 153 p HC A08/MF A01 CSCL 13F

N80-27222

Unclas
G3/85 27863

PHASE I OF THE "NEAR-TERM HYBRID VEHICLE PROGRAM"

FINAL REPORT

PREPARED FOR:

JET PROPULSION LABORATORIES

CONTRACT NUMBER 955189

PREPARED BY:

SOUTH COAST TECHNOLOGY, INC.

P. O. BOX 3265

SANTA BARBARA, CALIFORNIA 93105

SEPTEMBER 10, 1979

PREFACE

This report describes the work done by South Coast Technology, Inc., and its subcontractors and consultants on the preliminary design of a hybrid vehicle under Contract No. 955189, "Near Term Hybrid Vehicle Program," to the Jet Propulsion Laboratory.

Members of the SCT staff who contributed to the effort were:

Harold Siegel (program direction; cost, manufacturing, and marketing studies)

Robert Schwarz (performance specifications, system analysis and tradeoff studies, computer simulation)

Todd Gerstenberger (vehicle packaging, material substitution studies)

John Tenjeras (propulsion system and chassis mechanical design)

David Miesel (vehicle packaging)

Phyllis Roberson (computer programming, system studies)

William Davidson (computer programming, weights analysis)

In addition to the SCT staff, major contributions were made by various subcontractors and consultants. They included:

- General Research Corp. (mission analysis)
- C. E. Burke Engineering Services (propulsion system design and cost studies)
- EHV Systems, Inc. (system controls and power electronics)
- The Brubaker Group (material substitution, vehicle packaging, body design)
- Wharton EFA, Inc. (sensitivity studies)

- Sheller-Globe, Inc. (body materials)
- B. T. Andren (automotive engineering)
- Roy S. Renner (flywheels and alternate transmissions)
- Lonney Pauls (structural analysis and material substitution)

Assistance was also received from Siemens AG (electric motors), and from battery manufacturers participating in Argonne National Laboratory's ISOA Battery Program. Special acknowledgment must be made of the contribution of ESB Technology Co. (lead-acid batteries) and Eagle-Picher Industries, Inc., (nickel-iron batteries).

TABLE OF CONTENTS

	Page
1. Introduction	1
2. Program Overview	2
2.1 Objectives	2
2.2 Scope of Work	2
3. Mission Analysis and Performance Specification Studies	9
3.1 Objectives	9
3.2 Approach	9
3.3 Results	13
4. Design Tradeoff Studies	39
4.1 Objectives	39
4.2 Approach	39
4.3 Results	49
5. Near Term Hybrid Vehicle Preliminary Design	86
5.1 General Description	86
5.2 Propulsion System	90
5.3 Chassis Systems	114
5.4 Body	116
5.5 Vehicle System Characteristics	120
6. Development Requirements of the Near Term Hybrid Vehicle	130
6.1 Major Areas of Technology Development	130
6.2 Controls	131
6.3 Heat Engine	133
6.4 Batteries	136

Table of Contents (cont'd) Page

7. Conclusions and Recommendations 139

8. References. 147

Appendices

Appendix A - Mission Analysis and Performance Specification Studies Report

Appendix B - Design Tradeoff Studies Sensitivity Analysis

Appendix C - Preliminary Design Data Package

1. INTRODUCTION

Heat engine/electric hybrid vehicles offer the potential of greatly reduced petroleum consumption, compared to conventional vehicles, without the disadvantages of limited performance and operating range associated with pure electric vehicles. This report documents a hybrid vehicle design approach which is aimed at the development of the technology required to achieve this potential, in such a way that it is transferable to the auto industry in the near term.

The development of this design approach constituted Phase I of the Near Term Hybrid Vehicle Program. The major tasks in this program were as follows:

1. Mission Analysis and Performance Specification Studies
2. Design Tradeoff Studies
3. Preliminary Design

Detailed reports covering each of these tasks are included as appendices to this report; a fourth task, Sensitivity Studies, is also included in the report on the Design Tradeoff Studies. Because of the detail with which these appendices cover methodology and both interim and final results, the body of this report has been prepared as a brief executive summary of the program activities and results, with appropriate references to the detailed material in the appendices.

2. PROGRAM OVERVIEW

2.1 Objectives

The principal objective of the Near Term Hybrid Vehicle involves the development of a hybrid passenger vehicle which has maximum potential for reducing petroleum consumption in the near term (starting in 1985). The objectives of Phase I of this program, which is the subject of this report, were to develop a preliminary design for such a vehicle, which would provide the starting point for a subsequent final design and hardware development phase (Phase II), and to prepare a plan for carrying out this subsequent phase.

2.2 Scope of Work

The effort required to attain the program objectives involved the following:

1. Determining and characterizing the mission (vehicle use) for which the potential for reducing total petroleum consumption is greatest.
2. Identifying the vehicle characteristics and performance requirements associated with this mission.
3. Identifying realistic design alternatives for a near term hybrid system, along with design parameters which impact petroleum consumption, cost, and so forth.
4. Performing tradeoff studies of these design alternatives and parameters to arrive at a design approach.
5. Refining and developing the design approach into a preliminary propulsion system and vehicle design.

6. Characterizing this preliminary design in terms of its projected performance, fuel and energy consumption, and cost factors.

7. Defining the development requirements of the preliminary design.

Items 1 and 2 in the above list comprised Task 1 (Mission Analysis and Performance Specifications Studies); 3 and 4 comprised Task 2 (Design Tradeoff Studies); and 4, 5, and 6 comprised Task 3 (Preliminary Design).

Particularly in the first two tasks, it was necessary to limit the number of alternatives and variations considered in order to keep the amount of work to a manageable level. The first limitation was applied by the constraints and minimum requirements supplied by JPL, which are summarized in Table 2-1. In particular, this limited the initial field of investigation to vehicles with at least 5 passenger capacity and a high payload (520 kg). As will be discussed in Section 3 of this report, the Mission Analysis Task subsequently tightened this limitation to just full-sized, 6-passenger vehicles. This limitation was then applied in conducting the Design Tradeoff Studies. A related limitation, which we felt it necessary to impose to ensure that the technology being developed would be transferable to the auto industry, involved designing the hybrid propulsion system so that it could be packaged in a vehicle which is also available with a conventional system. Our Task 1 analysis indicated that hybrid vehicles would be brought to production status as evolutionary developments of existing full-size vehicles, not as vehicles which are designed

Table 2-1. NEAR TERM HYBRID VEHICLE PROGRAM CONSTRAINTS AND VEHICLE MINIMUM REQUIREMENTS

Constraints

C1 Vehicle Type: On-road passenger vehicle

C2 Fuel Sources: Must utilize two (2) -

(1) Wall plug electricity, battery storable within the vehicle

(2) Gasoline or diesel fuel

C3 Technology: Components and fabrication techniques must be within state-of-the-art capabilities that can be developed by by 1980 and must be amenable to mass production by the mid-1980's.

C4 Operator Interfaces: Operation and control of speed, braking, and direction must be similar to conventional vehicles in terms of complexity and response. Displays of information required for vehicle operation must be similar to conventional vehicles.

C5 Safety: Applicable Federal Motor Vehicle Safety Standards (FMVSS) as of date of contract (September '78).

Additional standards recommended by the National Highway Transportation Safety Administration (NHTSA) for electric and hybrid vehicles as of date of contract.

C6 Emissions: 1981 Federal Statutory Standards.

Table 2-1 (cont'd)

Vehicle Minimum Requirements*

R1 Passenger Capacity (SAE J1100a 2.3): 5 adults

(SAE J833a): Two (2) 95 percentile males
Three (3) 50 percentile males

R2 Cargo Capacity (SAE J1100a 2.3 and 9., consistent with 9.V2 and 9.V3): 0.5 m^3 (17.7 ft^3)

R3 Payload Capacity (Manufacturer's rating): 520 kg (1147 lbs)

R4 Speed - Continuous Cruise: 90 km/h (56 mph)

R5 Accelerations:

R5.1 0-50 km/h (0-31 mph) in 6 sec

R5.2 0-90 km/h (0-56 mph) in 15 sec

R5.3 40-90 km/h (25-56 mph) in 12 sec

R6 Gradeability (capability to maintain a given speed on a given grade for a given distance):

	Grade	Speed	Distance
R6.1	3%	90 km/h (56 mph)	1.0 km (0.62 mi)
R6.2	8%	50 km/h (31 mph)	0.3 km (0.19 mi)
R6.3	15%	25 km/h (16 mph)	0.2 km (0.12 mi)

R7 Additional Equipment:

R7.1 - Charger - onboard. 120 V, 60 Hz, 15 A and 30 A

R7.2 - Charger - offboard. Must interface with a 240 V and 208 V, 60 Hz, 60 amp offboard charger.

R7.3 - State-of-charge meter or equivalent

---

* NOTE: Terms used are in accordance with the references indicated. Reference documents are identified by code as follows:

SAE: SAE Handbook, 1977, Part 2.

COA: Liston, L.L., Sherrea, R.W., Cost of Operating an Automobile, U.S. Department of Transportation, Federal Highway Administration, April, 1974.

Table 2-1 (cont'd)

R7.4 - Heater ("Consistent with good industry practice")

R7.5 - Air Conditioner ("Consistent with good industry practice")

R8 Environmental Conditions:

R8.1 - Ambient temperature - vehicle must meet all minimum requirements over an ambient temperature range of -20°C to +40°C (-4°F to +104°F)

R8.2 - Self-contained warm up. Minimum of 10-minute self-contained warm up is allowed to reach full performance in ambient temperature range of -20°C to 0°C (-4°F to +32°F)

Vehicle must be operable within one minute in ambient temperature range of -20°C to +40°C (-4°F to +104°F)

R9 Test Conditions: Vehicle must meet all minimum requirements and performance specifications under the following test conditions:

R9.1 - Test Payload: 140 kg (309 lbs)

R9.2 - Lights and Accessories: On

R9.3 - Air Conditioning: Off

R10 Costs:

R10.1 - Maximum consumer purchase price: Competitive with purchase price of reference conventional internal combustion engine (ICE) vehicle

R10.2 - Maximum consumer life cycle costs (acquisition and operating costs as per COA): Same as average life cycle cost of reference vehicle

specifically from the ground up as hybrids and which are incompatible with other propulsion systems.

Consequently, once a reference conventional vehicle was selected as representative of the class of conventional vehicles performing the selected mission, this vehicle was also chosen as the basis for development of the hybrid. This meant that both the drive layout and basic vehicle structure were limited to being the same as that of the reference vehicle. We consider this to be a practical approach for a hybrid vehicle development. The technology developed for a front end rear wheel drive could be adapted to front engine front wheel drive should the manufacturer make that change in the future.

Other limitations which were imposed on the range of design alternatives considered were the following:

Hybrid system configuration - Parallel hybrid (i.e., both the heat engine and electric motor supply mechanical power to the rest of the drivetrain). Series hybrids were not considered because of the necessity to size the electric motor, controls, and batteries to handle the maximum system power requirement without help from heat engine. To meet the minimum performance requirements, such a system, designed with near term technology, becomes outlandish in size and manufacturing cost.

Heat engine - Conventional spark ignited gasoline (Otto cycle), stratified charge, and diesel reciprocating engines. Gas turbines, Stirling engines, Rankine cycle engines, and so forth, were excluded as not being capable of reaching production status by the mid-1980's.

Electric motor/controls - DC series, shunt, and permanent magnet motors and AC induction motors, with appropriate controllers using SCR's or transistors.

Transmission: Three and four speed automatics with lockup torque converters, various types of continuously variable transmissions, automatically shifted gearboxes.

Energy buffers - Flywheels only. Hydraulic pumps/motors and accumulators were not considered because of low efficiency and noise problems.

3. MISSION ANALYSIS AND PERFORMANCE SPECIFICATIONS STUDIES

3.1 Objectives

Tne basic objectives of this task were as follows:

1. To identify missions for which a hybrid vehicle, meeting the constraints and minimum requirements defined by JPL, would be suitable.
2. To identify those missions with the potential for achieving the greatest reduction in petroleum consumption.
3. To develop the vehicle and performance specifications which should be met by a hybrid vehicle designed to perform the mission(s) identified in #2.

3.2 Approach

The major assumptions which underly the approach taken to the mission analysis and development of performance specifications are the following:

- The daily operating range of a hybrid vehicle should not be limited by the stored energy capacity.
- The performance of a hybrid vehicle should not be strongly dependent on the battery state-of-charge.

These two assumptions were made for several reasons. First of all, a vehicle which satisfies these properties and which has greatly reduced petroleum consumption is technically feasible if it incorporates a suitable multi-modal control strategy. Secondly, if a hybrid vehicle is to have the potential for making a substantial impact on fleet petroleum consumption, it must be saleable in large numbers and,

consequently, must offer the same flexibility and utility as a conventional automobile, at least for the near term. Any fundamental restriction, such as a limitation on the operating range before battery recharge is required or limited performance under certain operating conditions, will restrict sales, particularly in the case of a 5 or 6 passenger vehicle whose purchase price will almost certainly be higher than that of a conventional counterpart.

The usability of a vehicle which satisfies these assumptions is not limited by the driving patterns associated with a given mission. (The only exceptions to this would occur for missions in which there is an extremely high performance requirement, e.g., trailer towing, police patrol work, and so forth.) Consequently, such a vehicle can be regarded as a functional replacement for the general purpose, 5-6 passenger conventional sedan. The 'missions' which such vehicles perform can, by and large, be defined by the following:

1. How the car is driven.
2. How the car is loaded.
3. The owner's preferences with respect to car size.

We have included the last factor in the mission definition because it is an extremely important consideration in the purchase of a car. In reality, it outweighs the objective capacity requirements (item 2); the number of car owners who actually require a full six passenger car (i.e., load it to capacity with some regularity) is far exceeded by the number who drive such a car simply because they like it more than a smaller car. Because of this, we reduced our definition to two factors: a driving pattern, together with a perceived payload requirement.

The identification of driving patterns and their characterization was based primarily on two extensive urban origin-destination travel surveys;[1, 2] other transportation studies were used to fill in gaps in this data.[3, 4, 5] Perceived payload requirements were identified by examining the current spectrum of 5-6 passenger vehicles, projecting this into the 1985 time frame, and splitting it into representative classes.

In order to identify the missions with the greatest potential for petroleum conservation, it was necessary to do the following:

1. Estimate the size of each of the fleets of conventional cars performing each of the missions in the 1985 time frame.
2. Estimate the fraction of the conventional cars within each fleet which could be replaced by hybrids.
3. Estimate the fuel consumption of conventional cars which are representative of each of the above fleets.
4. Estimate the annual travel of vehicles within each of these fleets.

The product of these four estimates is the total amount of petroleum consumed each year which has the potential of being reduced by the application of hybrid vehicles to the particular mission. The methodology used in making these four estimates is described in detail in Appendix A (Mission Analysis and Performance Specification Studies Report). Briefly, estimate 1 was made by relating each mission driving pattern to the function of the car in a single or multi-car household; data on the distribution of cars relative to the types

of household (multi-car or single car), dwelling (multi-family or single family), and area (urban or rural), were obtained from sources such as the U. S. Bureau of Census Annual Housing Survey.[6] In addition, the 1985 fleet breakdown into the selected representative vehicle size classes was estimated based on JPL projections and current data.

Estimate 2, the potential replacement rate by hybrids, requires some discussion. There are two sets of factors which will, in reality, limit the replacement of conventional vehicles by hybrids. The first of these involves those factors which physically make it impractical to use a hybrid vehicle under certain circumstances. Primary among these is the fact that facilities must be available for recharging batteries, which means that at least in the near term, the availability of off-street parking is a prerequisite for ownership of a hybrid. The second set of factors involves marketing considerations: the sensitivity of the market to the retail price differential of the hybrid over a conventional car, consumer perception of the advantages of greatly reduced fuel consumption, manufacturers' needs to meet corporate average fuel economy (CAFE) requirements, and so forth. The estimates made in the Mission Analysis task were based only on the first set of factors; i.e., the maximum potential replacement was estimated. However, the second set of factors was also taken into account, at least in qualitative terms, in the selection of the mission(s) with the highest petroleum conservation potential.

Estimate 3 was made by selecting vehicles typical of the selected size classes, projecting their characteristics to the 1985

time frame, and running computer simulations to estimate fuel consumption in operation on the mission driving patterns. Estimate 4 was based on JPL projections of average vehicle travel, combined with the characteristics of the individual mission driving pattern.

The development of performance specifications for a hybrid vehicle performing the selected mission(s) was based, in general, on the following:

1. The minimum vehicle and performance requirements specified by JPL.
2. The requirements imposed by the mission(s).
3. Characteristics of conventional vehicles performing the same mission(s).
4. Operating safety.

3.3 Results

3.3.1 Mission Identification and Characterization

Analysis of the data provided by the origin-destination travel surveys,[1, 2] which involved the Los Angeles, California, and Washington, D. C. areas, led to the division of drivers into three groups with widely differing travel patterns: primary, secondary, and only drivers. No other groups of drivers were clearly distinguishable on the basis of their reported travel. Primary and secondary drivers are from multi-car, multi-driver households, where the primary driver is defined as the driver who travels the greatest distance each day. Secondary drivers are the other drivers at multi-driver households. The only driver is from a one-car, one-driver household. Drivers sharing a car were not included in the data

processed. Drivers in each of these classes use their cars differently and require different capabilities of their vehicles; that is, each driver class performs a different 'mission.' The 'primary' driver accumulates the highest annual mileage and the 'secondary' driver the least; the 'only' driver data was very close to the average between these two.

Since the annual mileages accumulated by the Washington, D. C. and Los Angeles drivers were different from each other (within each driver category), and also different from the JPL projections with regard to annual mileage for time period of interest, it was necessary to adjust this data to a common basis. Since the 'only' driver data is representative of the average driver, this data was adjusted to agree with the JPL annual mileage projections, and the 'primary' and 'secondary' driver data were adjusted by the same factor. This adjustment also removed a great deal of the disparity between the Washington and L. A. data. The results are shown in Figure 3-1. This figure defines, for the three driver categories, the distribution of daily travel distance.

For the purposes of estimating fuel consumption, it is also important to define how this distance is driven, i.e., average speeds, maximum speeds, stops and starts, and so forth. The driving pattern, in general, changes as a function of the distance travelled in a day. For example, high mileage days will generally involve a larger fraction of highway type driving and a lower fraction of stop-and-go driving than low mileage days. For this reason, a composite driving cycle was constructed from the SAE227a(B), Federal Urban, and Federal

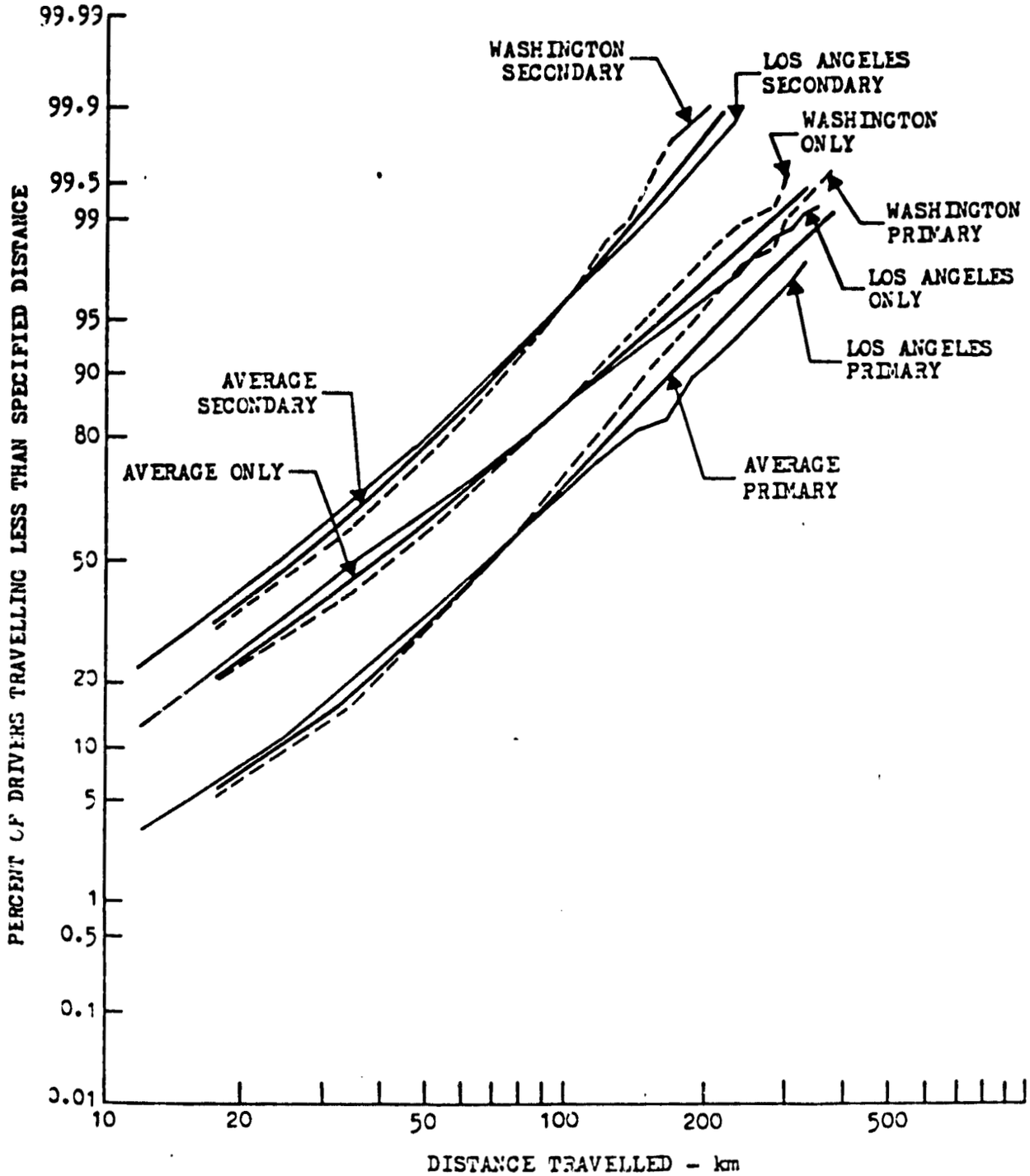

Figure 3-1. Travel Distribution Adjusted to JPL Projection of 1990 Average Annual Vehicle Travel

Highway driving cycles. This cycle varies with the daily travel distance as follows:

1. For a daily range of up to six times the J227a(B) cycle length, J227a(B) cycles are used exclusively.
2. For a daily range greater than the maximum for (1), but less than the sum of six J227a(B) cycles and three Federal Urban cycles, the urban cycles are used (plus the six J227a(B) cycles).
3. Beyond the maximum range allowed by (2), Federal Highway cycles are added to get the desired range.

It will be noted that the J227a(B) and urban cycles comprise 100% of the driving up to a daily range of about 38 km, which, from Figure 3-1, means that the travel on most driving days is characterized by these two cycles, and primarily, by the urban cycle. This is in accord with practical experience.

These two facets - the distribution of daily travel and the composite driving cycle which is a function of daily travel - identify and characterize the aspect of the missions considered which is associated with the driving pattern. The other aspect - vehicle size, or perceived accommodation requirements - was defined by two vehicle size categories. These are:

1. Five passenger or tight six passenger sedan. ('tight' category)
2. Sedan seating six adult passengers comfortably, with generous luggage space. ('roomy' category)

The accommodations of vehicles in the 'tight' category are typified by cars such as the Ford Fairmont/Zephyr, GM X-body cars, Chrysler Aspen/Volare, and so forth; i.e., vehicles spanning most of the 'compact' and the lower end of the 'midsize' EPA size classifications. The 'roomy' category is typified by the Ford LTD, Chevrolet Malibu, Dodge St. Regis, and so forth. These cars span the upper end of the 'midsize' through the 'large' range. Only two size classes were chosen instead of three or four for the following reasons:

1) As a result of downsizing, the entire size range of passenger cars is contracting, particularly at the upper end. By 1985 there will be no full-sized six passenger sedans in production which are significantly larger than the recently downsized LTD and Malibu.
2) The lower end of the 'compact' range does not fit in too well because of payload limitations; i.e., these cars generally do not have a 520 kg payload capacity as specified in the JPL minimum requirements.

Representatives of these two classes of vehicles were taken to be the Ford Fairmont and LTD. Both of these are recent designs which can be expected to be carried forward, in evolutionary form, at least to 1985.

At this point, we have identified and characterized six missions, represented by 3 x 2 matrix of driving patterns ('only,' 'primary,' and 'secondary' drivers) and vehicle sizes ('tight' and 'roomy'). These were the missions which were examined in greater detail to determine where the greatest potential petroleum savings lie. Other

missions which could be considered include those performed in commercial applications, such as taxis, rental cars, company fleet cars, etc. Although the taxi mission was considered briefly (see Appendix A), none of these applications were investigated in any depth for the following reasons:

1) The petroleum consumption represented by the vehicles in these classes is small.
2) The taxi application is not suitable because most taxis are operated for three shifts, which means there is no recharge time available.
3) Rental and fleet car driving patterns are probably not much different than those identified for private cars; moreover, a large percentage of these cars are returned to a central area for enough time to make recharge possible. Consequently, these vehicles can probably be lumped in with the private cars in terms of potential replacement by hybrids.

3.3.2 Petroleum Consumption by Mission

Relative Fleet Sizes

The estimated distribution of vehicles by mission in the 1985 fleet is shown in Table 2-1.

Table 2-1. Distribution of Cars Relative to Usage Patterns and Size Classification (Percentages of 1985 Fleet)

		At Single Family Units	At Multi-Family Units	Total
Secondary Cars	Tight	12.3	2.7	15.0
	Roomy	9.6	2.1	11.7
Only Cars	Tight	11.2	6.2	17.4
	Roomy	8.8	4.8	13.6
Primary Cars	Tight	10.0	2.5	12.5
	Roomy	7.8	1.9	9.7
				79.9

These numbers are based on the 'tight' cars comprising a constant 45% of the new car fleet, and the 'roomy' cars comprising 40% of the 1976 new car fleet, declining linearly to 30% in 1985. For a 10% retirement rate, this puts 35% of the 1985 in-use fleet in the 'roomy' class and 45% in the 'tight' class. It was assumed that these percentages apply uniformly with respect to the 'primary,' 'secondary,' and 'only' usage patterns, and with respect to the dwelling type; there is no data to indicate otherwise. Note that the dwelling type has been introduced as a variable because it turns out to be significant in estimating off-street parking availability, which, in turn, affects the potential for replacement by hybrids. Further discussion in this area will be found in Section 2.4.1 of Appendix A.

Potential Replacement by Hybrids

The availability of off-street parking was the factor considered in estimating the potential replacement by hybrid vehicles in each mission category. A detailed discussion of this will be found in Section 2.4.2 of Appendix A; the results are summarized in Table 2-2.

Table 2-2. Distribution of Cars with Off-Street Parking Available Relative to Usage Patterns and Size Classification (Percentages of 1985 Fleet)

Mission		At Single	At Multi-	
Usage	Vehicle Size	Family Units	Family Units	Total
Secondary	Tight	$<$ 9.6	2.5	$<$12.1
	Roomy	$>$ 7.5	1.9	$>$ 9.4
Only	Tight	$<$ 8.5	5.8	$<$14.3
	Roomy	$>$ 6.7	4.5	$>$11.2
Primary	Tight	$<$ 7.8	2.3	$<$10.1
	Roomy	$>$ 6.1	1.7	$>$ 7.8
				64.9

The less than ($<$) and greater than ($>$) signs refer to the fact that there is a correlation between the availability of off-street parking and vehicle size, at least for cars at single family dwellings; however, we were not able to quantify it with any precision. That is, a large or luxury car is more likely to be owned by an individual who also owns a dwelling with off-street parking for one or more vehicles than is a compact or midsize car.

It must be reiterated that the numbers in Table 2-2 represent maximum potential replacement percentages. Marketing factors will

reduce these numbers substantially depending on the retail price differential of the hybrid over a conventional car. A study by the Wharton EFA, Inc., was subsequently done to quantify this aspect; this is reported on in Section 3.6.3 of Appendix B (Design Tradeoff Studies and Sensitivity Analysis). At this point, however, it suffices to say that two real world factors tend to bias the results toward a greater relative penetration of the 'roomy' car class by ybrids than the 'tight' class. The first of these is lower sensitivity of volume to price in the 'roomy' car segment; i.e., an individual buying a car in the $8,000-10,000 bracket is more likely to accept a substantial price increase to achieve greater fuel economy than is an individual buying a car in the $5000-6000 bracket which already gets reasonably good fuel economy.

The second factor to be considered is the manufacturers' need to meet federal CAFE requirements, while still maintaining a saleable and profitable product mix. The large, generally more heavily optioned car has a higher profitability than a smaller car; and the preferences of many people run toward the large car. However, it is also the class of car which gives the manufacturer the most problems in meeting his CAFE if it continues to constitute a substantial portion of his production. Consequently, a manufacturer would find it preferable to introduce a hybrid (or any other system which improves fuel economy with some penalty in first cost) first in the larger vehicle class, just as GM has done with diesels. This helps his CAFE most, affects his total sales least (since the hybrid is introduced into the vehicle class with the lowest sensitivity of

volume to price), and allows him to maintain a vehicle line with high profitability.

Fuel Consumption of Conventional Vehicle Fleets

In the 'tight' size category, the in-use fuel economy of a representative conventional vehicle (1985 version of the Ford Fairmont) was estimated to be 24 mpg. This estimate is detailed in Section 2.5.4 of Appendix A; it suffices to say here that it is based on the following assumptions with regard to vehicle and propulsion system improvements between 1978 and 1985:

1) Reduction in drag coefficient from .54 to .40.
2) Reduction in rolling resistance coefficient from .015 to .010.
3) Use of a lockup torque converter.
4) 4% improvement in average engine efficiency from 1978 to 1985.

As discussed in Appendix A, this projection agrees quite well with another projection for this class of vehicle, which is based on the assumptions and guidelines provided by JPL.

For the 'roomy' vehicle class, the corresponding projection. for in-use fuel economy was 18 mpg. In this case, the vehicle class was represented by a 1985 version of the Ford LTD. In neither vehicle class is the difference in driving patterns between the secondary, only, and primary driver categories enough to affect these fuel economy estimates to a great degree.

The annual fuel consumption for these reference vehicles, for each of the driving patterns, is summarized in Table 2-3.

Table 2-3. Fuel Economy of Reference Vehicle

Mission				
Usage Pattern	Annual Travel (1985)	Vehicle Size	FE (mpg)	Annual Fuel Consumption (gals.)
Secondary Driver	11300 km	Tight	22	319
		Roomy	15	468
Only Driver	19100 km	Tight	24	495
		Roomy	18	695
Primary Driver	29900 km	Tight	26	715
		Roomy	19	978

Going back to the percentages shown in Table 2-1, we find that, if all the vehicles in these size classes in the 1985 fleet were replaced by these two reference vehicles, the fuel consumed would be given by the numbers shown in Table 2-4 (assuming a total fleet size of 113 x 10^6 vehicles).

Table 2-4. Distribution of Fuel Consumed by Reference Vehicles in 1985 Fleet

Mission		Fuel Consumption (Gal. x 10^{-6})		
Usage	Vehicle Size	Cars at Single Family Units	Multi-Family Units	TOTAL
Secondary	Tight	4430	970	5,400
	Roomy	5080	1110	6,190
Only	Tight	6260	3470	9,730
	Roomy	6550	3570	10,120
Primary	Tight	8080	2020	10,100
	Roomy	8620	2100	10,720

Thus, we come to the conclusion that slightly more fuel will probably be consumed in the 1985 fleet by cars of the 'roomy' class than by those of the 'tight' class, despite the fact that the roomy car class is a smaller segment of the fleet.

When we consider the segment of the fleet which could be replaced by hybrids in the 'tight' and 'roomy' categories, we get the results shown in Table 2-5, under the assumption that the availability of off-street parking for battery recharge is uniformly distributed relative to the two size classes, as was done in the construction of Table 2-2. As before, the $<$ and $>$ signs have been added to indicate that this assumption is not true, at least in the case of cars located at single family dwellings, and to indicate that there is a higher probability that a 'roomy' class vehicle could be replaced by a hybrid than a 'tight' class vehicle, from the standpoint of electrical service for battery recharge being available.

Table 2-5. Distribution of Fuel Consumed by Reference Vehicles in 1985 Fleet with Off-Street Parking

Mission		Fuel Consumption (Gal. x 10^{-6})		
Usage	Vehicle Size	Cars at Single Family Units	Multi-Family Units	TOTAL
Secondary	Tight	$<$ 3460	900	$<$ 4360
	Roomy	$>$ 3970	1000	$>$ 4970
Only	Tight	$<$ 4750	3240	$<$ 7990
	Roomy	$>$ 4990	3350	$>$ 8340
Primary	Tight	$<$ 6300	1860	$<$ 8160
	Roomy	$>$ 6740	1880	$>$ 8620
		Total 'Tight'		$<$ 20510
		Total 'Roomy'		$>$ 21930

Selection of Mission/Reference Vehicle

The data from Table 2-5 indicates that the potential for petroleum conservation by hybrids is very nearly the same in the two classes of vehicles, with perhaps the higher potential being associated with the 'roomy' class. As noted, the numbers in this table do not take into account the following:

- The 'roomy' vehicle owner is more likely to have off-street parking for recharging batteries.
- He is more likely to accept the retail price differential of the hybrid.
- The amount of re-engineering and modification of the 'roomy' vehicle structure and running gear to accept a hybrid propulsion system is likely to be much less than that required for a 'tight' vehicle; thus, a 'roomy' hybrid vehicle is likely to be an economically more viable vehicle to produce than a 'tight' vehicle.
- The manufacturer's CAFE benefits more from improving the fuel economy of his least fuel efficient vehicle line (the 'roomy' class) than from improving those which already have good economy.

All these factors drive the balance in the direction of the 'roomy' vehicle; what Table 2-5 indicates to be a near-wash situation becomes one which clearly is favorable to the 'roomy' hybrid.

Consequently, we have selected the 'roomy' class for the vehicle size aspect of the mission which offers the greatest potential for petroleum conservation, and the LTD-based reference vehicle to represent a comparable IC engined vehicle.

As far as the usage pattern portion of the mission definition is concerned, a vehicle may experience all three during its lifetime. A vehicle cannot really be designed 'for' a primary driver, or an only driver, or a secondary driver, to the exclusion of the other categories because that is not how vehicles spend their lives. In general, the usage patterns tend more toward that of the primary driver during their first few years and toward the secondary driver during their declining years.

However, the 'only' driver usage pattern can be used as an overall average. Consequently, for the purposes of vehicle and propulsion system design, and estimating fuel and energy consumption, it suffices to work with the 'only' driver travel distribution.

Summary of Mission Characteristics and Mission Related Vehicle Characteristics

In this section, the final mission specifications resulting from the Task 1 effort are summarized. Sections of the Task 1 report (Appendix A) which provide discussions of methodology, interim results, and other supporting data are given in parentheses at the end of each individual specification. Note that references to appendices in this context mean appendices of the Task 1 report.

M1- Daily Travel

The distribution of daily travel for the only driver usage pattern is as follows:

Daily Travel (km)	Fraction of Total Driving	Fraction of Daily Travel on: J227(a)B	FUDC	FHDC
0-20	.0461	.204	.796	0
20-30	.0560	.082	.918	0
30-40	.0759	.058	.942	0
40-50	.0799	.045	.798	.157
50-60	.0769	.037	.652	.311
60-70	.0583	.031	.552	.417
70-80	.0672	.027	.478	.495
80-90	.0579	.024	.422	.554
90-100	.0596	.021	.378	.601
100-120	.0927	.019	.326	.655
120-140	.0653	.016	.276	.708
140-160	.0538	.014	.239	.747
160-180	.0457	.012	.211	.777
180-200	.0307	.011	.189	.800
200-220	.0226	.010	.171	.819
220-240	.0206	.009	.156	.835
240-260	.0134	.008	.144	.848
260-280	.0145	.008	.133	.859
280-300	.0104	.007	.124	.869
300-320	.0111	.007	.116	.878
> 320	.0414	.006	.109	.885

(2.2.1, 2.7, Appendix A1, Section 2)

M2 - Payload:

Typical of roomy, 6 passenger vehicle.

See item V1, Mission-Related Vehicle Characteristics.

(2.2.2, 2.7, Appendix A1, Section 3)

M3 - Trip Characteristics:

Trip characteristics are such that battery recharge once a day is possible, but not more frequently.

(2.3)

M4 - Driving Cycles:

The driving pattern on a given day is represented by:

SAE J227a(B) for daily travel up to 6 such cycles (2km).

6 J227a(B) cycles, and the remainder on FUDC, for daily travel up to 6 J227a(B) cycles + 3 FUDC's (38 km).

6 J227a(B) cycles + 3 FUDC's, and the remainder on FHDC, for daily travel beyond 38 km.

The breakdown of daily travel into these three driving cycles is also indicated under M1.

(Appendix A, Section 7)

M5 - Annual Travel Per Vehicle:

19600 km.

(2.2.1, Appendix A, Section 2)

M6 - Potential Number of Vehicles in Use as a Percentage of Total Fleet:

35% of 1985 in-use fleet (total)

28% of 1985 in-use fleet (potentially replaceable by hybrids)

(2.4.1, 2.4.2, Appendix A, Section 4)

M7 - Reference Conventional ICE Vehicle:

1979 Ford LTD projected to 1985 engine and vehicle technology.

(2.5, 2.7)

M8 - Estimated Fuel Consumption of Mission Performed Entirely by Reference Vehicles:

27000×10^6 gal. (total)

21900×10^6 gal. (vehicles potentially replaceable by hybrids)

(2.5.4, 2.6)

The only mission-related vehicle characteristic which is not covered in the performance specifications relates to the vehicle size aspect of the mission. For the 'roomy' vehicle, the following capacity requirements are suitable:

V1 - Capacity:

V1.1 - Passengers: 6 adults (2 95th % adult males and 4 50th % adult males)

Minimum interior dimensions (cm):

	Front Compartment	Rear Compartment
Headroom	96	94
Shoulder room	155	155
Leg room	105	96

V1.2 - Cargo: .6 m^3

(2.5.1, 2.5.2, 2.8.1

3.3.2 Performance Specifications

In this section, the development of those performance specifications which have the most immediate impact on the design of the vehicle are discussed. Additional amplification will be found in Section 2.9 of Appendix A.

Cruise and Maximum Speeds

It is difficult to justify a continuous cruising speed requirement much in excess of the 55 mph speed limit; consequently, we set this equal to the JPL minimum requirement of 90 kph (56 mph).

The maximum speed requirement is determined by the ability to pass with reasonable safety. A combination of a top speed of at

least 130 kph (80 mph) and adequate acceleration capability up to this speed should be provided. To a great extent, the latter is automatically achieved if the vehicle meets reasonable 0-90 kph acceleration requirements.

The length of time that the vehicle must maintain the top speed is a function of the passing maneuver. Assuming that the driver is on a road in which passing situations are encountered repetitively, then the ability to repeat such short duration maneuvers at fairly frequent intervals is much more significant than the ability to hold maximum speed for a long period. Consequently, rather than specify a length of time for which top speed must be held, we have chosen to specify that the vehicle must be able to complete a standard high speed pass maneuver once every five minutes, cruising at 90 kph between maneuvers, at least 10 times in succession without having the passing distance increase by more than 5%.

Acceleration and Gradeability

The minimum performance requirement of 0-90 kph in 15 sec. represents a performance level which is on the order of only 10% below that attained by the reference vehicle; and this level of performance appears to be adequate from a safety standpoint. Consequently, we left this specification unchanged from the JPL minimum requirements.

The minimum requirements for gradeability are, on the other hand, significantly below those of conventional cars and would represent an unacceptably low performance level. As a matter of fact, the minimum acceleration requirements do imply a much higher gradeability than the minimum gradeability specified by JPL, as shown in Figure 2-2.

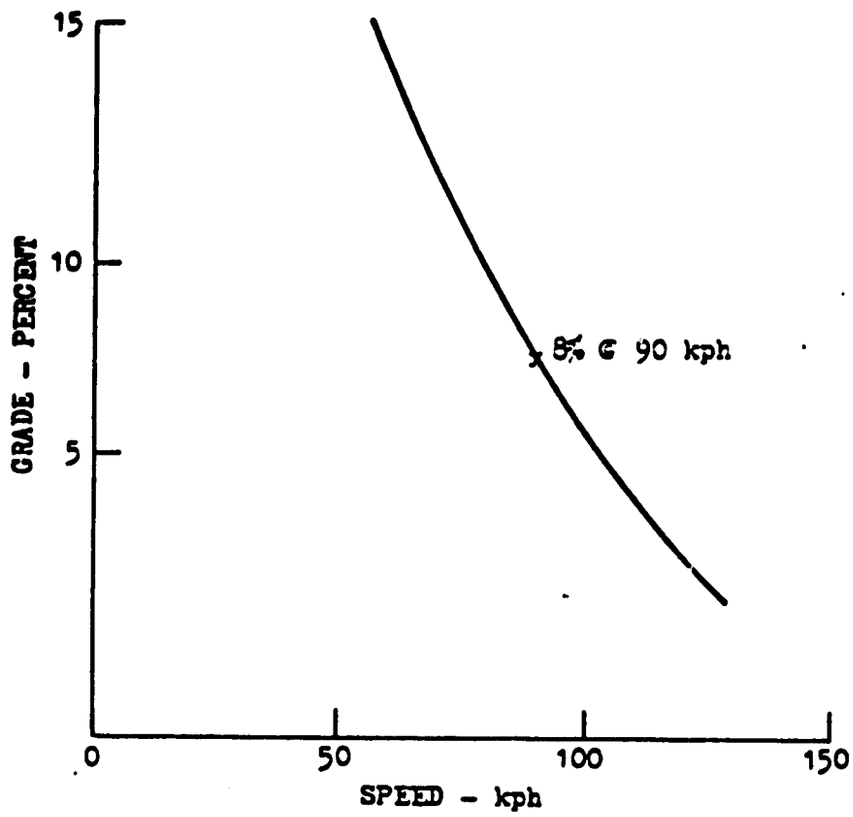

Figure 2.2 Gradeability for Vehicle Meeting Minimum Acceleration Requirements

Based on Figure 2-2, a vehicle meeting the minimum acceleration requirements would be able to negotiate a 3% grade at a speed of about 125 kph, a 5% grade at 110 kph, an 8% grade at 90 kph, and a 15% grade at 55 kph. On major highways, there are in many cases stretches of road with gradients on the order of 3-5% on which the gradient is maintained over a long distance. To handle these cases, we believe that a vehicle should be able to maintain cruising speed (90 kph) on a 3% grade indefinitely, and on a 5% grade for 20 km. Grades of 8% are much less common on major highways; in this case, we would require that a vehicle be able to maintain at least 85 kph (i.e., within 5 kph of cruising speed) for 5 km, and be able to maintain 65 kph without restriction on distance. The latter would ensure the vehicle's ability to maintain a reasonable speed on extended climbs on secondary roads in mountainous regions. 15% grades are normally encountered only on secondary roads for relatively short distances. For this grade, we would require the ability to maintain 50 kph for 2 km.

Maximum gradeability is usually associated with the ability to negotiate steep driveways and other very short grades. We used the accepted value here of 30%.

Consumer Costs

This subject is discussed in detail in Sections 2.4.3 and 2.8.3 of Appendix A. In addition to the areas discussed in Appendix A, there are tradeoffs between fuel economy and consumer costs, as discussed in Section 4 and Appendix B of this report. These were not yet being

investigated at this point in the program. In view of this, and in view of the large number of factors which will affect how a hybrid would actually be priced in relation to the rest of the market, it was premature at this point to specify any hard numbers. Consequently, the approach taken was to pursue the subsequent design tradeoffs and preliminary design work with the goal of keeping the manufacturing cost increment over the reference vehicle to a minimum, consistent with providing a substantial improvement in fuel economy, rather than attempting to design to some hard and fast numbers.

Emissions

In this area, there is an obvious requirement to meet the federal emission standards for 1985 and the years following. These are:

HC	.41 g/mi (.25 g/km)
CO	3.4 g/mi (2.11 g/km)
NOx	1.0 g/mi (.62 g/km)

Since there is still debate over whether these requirements are too stringent, we saw no point in specifying any tighter emission controls. It must be recognized, however, that the current Federal Test Procedure is inadequate to estimate the in-use emissions of a hybrid vehicle due to the fact that the hybrid can have at least two modes of operation depending on battery state-of-charge. A discussion of possible modifications to the FTP to accommodate hybrid vehicles is given in Section 3.3.1 of Appendix C.

Rechargeability

To bring a battery pack up to 100% state-of-charge (i.e., 100% of the cells fully charged), it is generally necessary (at least for

lead-acid batteries) to give the pack an equalizing charge. That is, the batteries are deliberately overcharged, allowing them to gas under a low charging current for a period of several hours. When this is done, the charging process takes longer than usual; moreover, this process should not be carried out every time the batteries are charged but at intervals of, say, every fifth to tenth charge. Otherwise, battery life is adversely affected. When the batteries are charged normally (i.e., not given an equalizing charge), they will rarely attain a true, 100% charge.

As a result of these considerations, the time to recharge must be qualified not only by a statement of where the battery is coming from (initial state-of-charge), but where it is going to (final state-of-charge). Under normal (non-equalizing) charging, the final state-of-charge will probably be on the order of 90%. Consequently, we have specified the recharge time to bring the battery from 80% depth of discharge to 10% depth of discharge. The recharge times specified were based on the available power from the wall plug for the indicated services, and some preliminary assumptions as to the battery capacity the hybrid would be likely to have.

Summary of Performance Specifications

In this section, the performance specifications developed in Task 1 are summarized. Sections of Appendix A containing backup data and rationale are indicated in parentheses for each item.

P1 - Minimum Non-Refueled Range:

P1.1	FHDC	400 km
P1.2	FUDC	250 km
P1.3	J227a(B)	150 km

(2.9.1)

P2 - Cruise Speed: 90 kph

(2.9.2)

P3 - Maximum Speed:

P3.1	Maximum Speed	130 kph
P3.2	Length of Time Maximum Speed Can be Maintained on Level Road	Undefined

P3.3 High Speed Pass Capability: Vehicle must be able to perform a high speed pass maneuver, at intervals of five minutes, 10 times in succession, without the passing distance increasing by more than 5% above the value obtained with the propulsion batteries 20% discharged. This requirement is to hold throughout the entire range of battery discharge levels occurring in normal operation. The maneuver involves passing a 55' long truck travelling at a constant 80 kph, clearing it by 30 m at the beginning and end of the maneuver. Limiting speed during the maneuver is 129 kph, and initial speed is 80 kph. Following completion of the maneuver, the vehicle shall decelerate to 90 kph and maintain that speed for 4.0 minutes. It shall then decelerate and maintain 80 kph until the next maneuver. (2.9.2, Appendix A Section 5)

P4 - Accelerations:

P4.1	0-50 kph	6 sec max.
P4.2	0-90 kph	15 sec max.
P4.3	40-90 kph	12 sec max.

(2.5.3, 2.9.3, Appendix A Section 5)

P5 - Gradeability:

	Grade	Speed	Distance
P5.1	3%	90 kph	Indefinitely
P5.2	5%	90 kph	20 km
P5.3	8%	85 kph 65 kph	5 km Indefinitely
P5.4	15%	50 kph	2 km
P5.5 Maximum Grade	30%		

(2.5.3, 2.9.3, Appendix A Section 5)

P6 - Payload Capacity: 520 kg

(2.5.1, 2.5.2, 2.8.1, 2.9.4)

P7 - Cargo Capacity: .6 m^3

(2.5.1, 2.5.2, 2.8.1, 2.9.1)

P8 - Consumer Costs:

P8.1 Consumer Purchase Price	TBD
P8.2 Consumer Life Cycle Cost	

(2.4.3, 2.8.3, 2.9.5)

P9 - Emissions - Modified Federal Test Procedures:

P9.1 Hydrocarbons (HC)	.25 g/km
P9.2 Carbon monoxide (CO)	2.11 g/km
P9.3 Nitrogen oxides (NOx)	.62 g/km

(2.9.6)

P10 - Ambient Temperature Capability:

Temperature range over which minimum performance requirements can be met: $-20^{o}C$ to $+40^{o}C$.

(2.8.4, 2.9.7)

P11 _ Rechargeability:

Time to recharge from 80% to 10% depth of discharge.

On-board charger:	120 V, 30 A service	7 hr
	120 V, 15 A service	14 hr
Off-board charger:	240 V, 60 A service	2 hr

(2.9.8)

P12 - Required Maintenance:

Routine maintenance required per month:
.076 hours per month.

(2.9.9)

P13 - Unserviced Storability:

P13.1 Duration: same as reference vehicle

P13.2 Warm up Time Required: TBD

(2.9.10)

P14 - Reliability:

P14.1 Mean Usage Between Failures - Powertrain = 41,000 km

P14.2 Mean Usage Between Failures - Brakes = 55,000 km

P14.3 Mean Usage Between Failures - Vehicle = 33,000 km

(2.9.11)

P15 - Maintainability:

P15.1 Time to Repair - Mean = 9.175 hrs over life of vehicle

P15.2 Time to Repair Variance: Data on conventional vehicles not available.

(2.9.12)

P16 - Availability:

Minimum expected utilization rate - 98.6%

(2.7.4)

P17 - Additional Accessories and Amenities:

. (Section 2.9.14 and Appendix A4)

4. DESIGN TRADEOFF STUDIES

4.1 Objectives

The objectives of this task were as follows:

1) To determine the functional dependence of the critical vehicle characteristics, such as fuel economy, energy consumption, manufacturing cost, and consumer costs, on vehicle and propulsion system configuration and design parameters.
2) To utilize this information to perform design tradeoff studies, and thereby, develop a design concept for a hybrid vehicle which offers the greatest promise of achieving the program objective of maximizing the potential for reducing fuel consumption, within the constraints of utilizing near term technology which is transferable to the auto industry.

4.2 Approach

The organization of the work performed to achieve these objectives is shown in Figure 4-1. It was broken down into two phases:

- System level tradeoff studies, whose objective was to optimize some basic parameters which have a major influence on cost factors and fuel consumption.
- Subsystem and component level tradeoff studies, whose objective was to develop specific information on subsystem configurations, component design and selection, material selection, vehicle layout, and so forth.

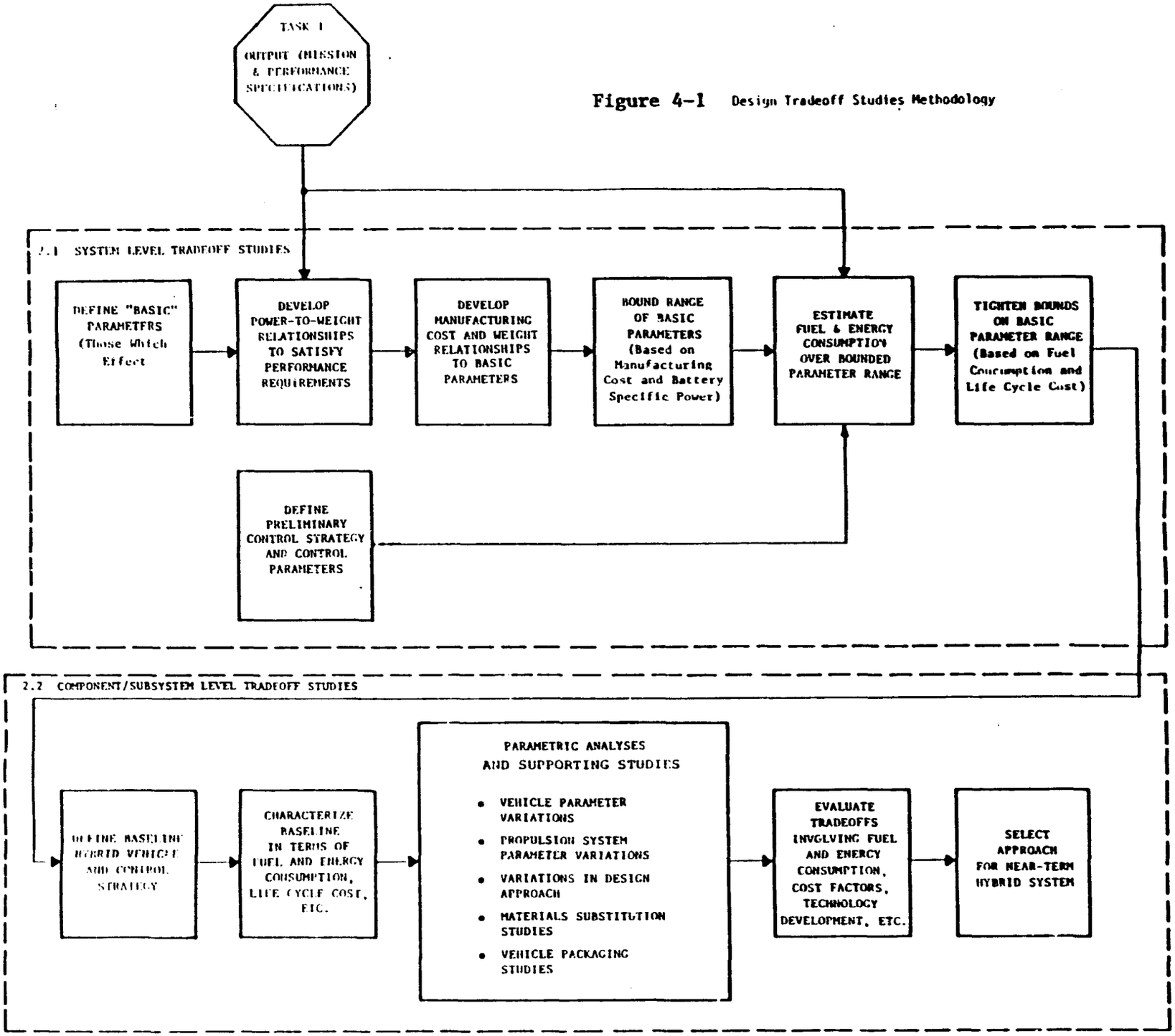

Figure 4-1 Design Tradeoff Studies Methodology

4.2.1 System Level Tradeoff Studies

Basic Parameter Definition

The first step in these studies was to define what we have called 'basic' parameters in Figure 4-1. These are the parameters which have a major influence on vehicle manufacturing cost, weight, and fuel and energy consumption. The simplest set of such parameters is the following:

1) Battery type (lead-acid, nickel-zinc, etc.).
2) Battery weight fraction, $\bar{W}_B$, defined as the ratio of battery weight, W_B, to vehicle curb weight, W_V.
3) Heat engine power fraction, $\bar{P}_{HE}$, defined as the ratio of peak heat engine power, P_{HE}, to the maximum vehicle power requirement, P_{TMAX}.

This parameter set leaves out a great deal of detail with regard to the specific characteristics of the components used; however, this was necessary at this point to keep the universe of possibilities down to a manageable size.

Power-to-Mass Relationships

The next step was to determine the power-to-mass ratio required to achieve the performance requirements defined in Task 1, Mission Analysis and Performance Specifications. This was accomplished by running maximum acceleration simulations of pure electric and pure heat engine vehicles, and determining the power-to-weight ratio required to achieve the performance requirements for both of these cases. A linear variation in the required power-to-weight ratio was then assumed for the intermediate cases, i.e., hybrids.

Manufacturing Cost and Weight Relationships

A series of linear cost vs. weight, weight vs. power relationships, and cost vs. power relationships were developed for the major vehicle subsystems. These linear relationships, together with the linear power-to-weight relationship described above, were then employed in a vehicle weight/cost model, which computes the overall vehicle weight and cost, as well as the weights, power ratings, and costs of the major propulsion system components, as functions of the three basic parameters: heat engine power fraction ($\bar{P}_{HE}$), battery weight fraction ($\bar{W}_B$), and battery type. A computer program, WANDC, was written to facilitate these computations; it is documented in Appendix A of this report.

The data used in developing these cost, weight, and power relationships came from a variety of sources, chief of which was an extensive study of weights and costs of automotive components done by Rath and Strong.[7] Cost numbers generated by General Electric for the Near Term Electric Vehicle Program[8] were also used, as well as manufacturers' data and cost goals for the ANL Near Term Battery Program.

Bounds on Parameter Values

The weight/cost model was used to establish some preliminary bounds on the ranges of the basic parameters $\bar{P}_{HE}$ and $\bar{W}_B$. The constraints used to establish these bounds were the following:

1. Limitation on peak battery power for each battery type. This puts a lower bound on the range of permissible values of $\bar{W}_B$ for a given value of $\bar{P}_{HE}$.

2. Limitation on the manufacturing cost increment of the hybrid over a conventional vehicle. This puts an upper bound on the range of permissible values of $\bar{W}_B$ for a given value of $\bar{P}_{HE}$.

3. An a priori bound of .8 was placed on the heat engine power fraction, under the assumption that anything over .8 is too close to a conventional vehicle.

These three constraints define a triangular region in the $\bar{P}_{HE}$, $\bar{W}_B$ plane; subsequent investigation was limited to this region.

Preliminary Control Strategy and Control Parameters

Before proceeding to the next step, which involved the estimation of fuel and energy consumption and life cycle costs over the range of basic parameters, it was necessary to define a control strategy to use in the computer simulations which would provide the fuel and energy consumption estimates. A number of runs were made with a hybrid vehicle simulation program, HYBRID (documented in Appendix B of this report), which led to the conclusion that to minimize fuel consumption, the heat engine should be shut off for system power demands below a certain theshold (P_{EOMIN}), provided the propulsion battery is not discharged beyond a certain point (D_{BMAX}). This strategy, thus, has two modes of operation: on Mode 1, the battery has not reached the discharge limit, D_{BMAX}; and whenever the system power demand is below the threshold, P_{EOMIN}, the system operates only on electric power. For higher demands, both portions of the system operate. On Mode 2, the battery has reached the discharge limit D_{BMAX}, and the heat engine now supplies the average power demand,

with the electric motor being used only for peaking and to supply regenerative braking. On both modes, the heat engine is shut down when the vehicle is stopped or decelerating.

This strategy requires on-off operation of the heat engine, which has some unknowns associated with it, particularly in terms of emissions. However, the fuel economy pay-off makes it worth pursuing. This area is discussed in detail in Section 3.3 of Appendix C of this report.

Estimation of Fuel and Energy Consumption

Fuel and energy consumption were estimated using the program HYBRID. This program simulates operation of a hybrid vehicle over the composite driving cycle defined in the Mission Analysis task, using a control strategy of the type just discussed, and computes yearly average fuel and energy consumption. Since the purpose of this program was to help in localizing the range of the basic parameters rather than optimizing a control strategy or investigating the effects of detailed component changes, the simplest possible representation was used of all components. This is discussed in detail in Section 2.1.1 of Appendix B.

The program was also exercised for the 1985 LTD reference vehicle, for which it gave a fuel consumption estimate about 11% lower than the projected value of 18 mpg. As a result of this, all projections of fuel economy for hybrid vehicles obtained from this program were multiplied by .89 to avoid overestimating the gains from a hybrid propulsion system

Tightening of Basic Parameter Ranges

In attempting to draw the bounds a little tighter around the acceptable range of the basic parameters $\bar{W}_B$ and $\bar{P}_{HE}$, we took the viewpoint that life cycle cost and fuel consumption are the two principal variables to be considered in doing this. It would be too much to hope for that both these variables would reach minimum values for the same combination of $\bar{W}_B$ and $\bar{P}_{HE}$; and, indeed, this was not the case. In light of this, the approach taken was as follows: For each combination ($\bar{P}_{HE}$, $\bar{W}_B$), a number of cases were run with HYBRID, with various values of the control parameters P_{EOMIN} and D_{BMAX}. Life cycle costs were obtained in each case using the program LYFECC (documented in Appendix A). For each case, the life cycle cost was plotted against the fuel consumption. A series of curves and envelopes of curves was then drawn; and, based on the shape of the overall envelope and the proximity of the individual points to it, a judgment was made as to localizing the range of the parameters $\bar{P}_{HE}$ and $\bar{W}_B$. This will become clearer when the actual data and results are discussed in Section 4.3.1.

4.2.2 Subsystem and Component Level Tradeoff Studies

Construction and Simulation of Baseline Systems

After the selection of a limited range for the basic parameters which define the vehicle weight and major components' power ratings, the next step was to construct a baseline hybrid vehicle and propulsion system with parameters within that range. This vehicle would serve as the focal point for making design variations and investigating the tradeoffs involved in such variations. Because of the

critical nature of its function as a starting point and as an aid in making intelligent tradeoff decisions, it was imperative that the baseline system be a reasonably good one to start with. Consequently, considerable effort was expended in selecting the system configuration and in developing a control strategy which would give a good combination of fuel economy and life cycle cost for the system configuration and parameters chosen.

The major tool used in constructing and characterizing the baseline hybrid was a computer simulation, HYBRID2. This program evolved from HYBRID and differs from it in the more detailed modeling of the propulsion components, as discussed in Section 2.1.2 of Appendix B.

Selection of the heat engine, traction motor, and transmission for the baseline vehicle was made on the basis of using the most advanced technology currently available in production hardware.

Parametric Analyses and Supporting Studies

The purpose of these studies was to generate the data which would provide the basis for making intelligent and realistic tradeoffs regarding the selection of design parameters and design of the propulsion system and overall vehicle. They were conducted in a number of different areas, which may be grouped as follows:

1. Determination of the effects of variations in vehicle characteristics (weight, drag coefficient, etc.) from the values used in the baseline vehicle. The intent of these studies was to assess the relative importance of these characteristics in terms of their effects on fuel

consumption and to develop data which would provide the basis for estimating how much of a manufacturing cost increase (associated with any improvement in one of these characteristics) would be justified by an associated improvement in fuel consumption.

2. Determination of the effects of variations in propulsion system characteristics (engine size, transmission ratios, control parameters, etc.) from the values used in the baseline vehicles. These are characteristics over which we have somewhat more control than those in the first group.
3. Determination of the effects of design approaches which are alternatives to those used for the propulsion system components or subsystems of the baseline system (engine type, transmission type, etc.).
4. Associated studies not directly concerned with the propulsion system, but which provide supporting rationale for the overall vehicle design. These include material cost and substitution studies and packaging studies.

These studies were generally concerned with quantifiable aspects of the system, such as fuel and energy consumption, manufacturing cost, retail price, life cycle cost, and acceleration performance.

Evaluation of Design Alternatives and Tradeoffs

In addition to sorting through and evaluating the quantitative data on fuel and energy consumption, costs, and performance generated in the studies described previously, other factors were taken into

account in evaluating design alternatives and parameter variations. These included emissions, driveability, reliability, and technological requirements. (By technological requirements, we mean the requirements and risk involved in the development of immature technology to achieve production status by 1985, together with the requirements for implementing the technology in production and the compatibility of those requirements with the manufacturing structure of the automobile industry.) These additional factors were evaluated based on engineering judgment, rather than quantitative data. With emissions, for example, because of the lack of data on emissions when an engine is operated in an on-off mode, a quantitative prediction of emission levels is impossible at this point in time. However, it is possible to project if a different engine type is likely to give more or less trouble as far as emissions are concerned; for example, it is safe to predict that a diesel will have more of a problem with particulates than a spark ignited gasoline engine.

The process of evaluating design alternatives with respect to the above factors and the quantitative ones was as follows: First, a design approach was screened in terms of those factors which did not require detailed computation to evaluate; and, if it was apparent that it had serious shortcomings in one or more areas, it was dropped (for example, if the technology development required to bring it to production status by 1985 appeared to involve a very high risk).

If a design approach survived this preliminary screening process, then it was subjected to detailed analysis using the various computer programs developed for the task, and an overall evaluation was made relative to the baseline hybrid system.

4.3 Results

4.3.1 System Level Tradeoff Studies

Using the weight and manufacturing cost program, WANDC, a series of runs were made for heat engine power fractions ($\bar{P}_{HE}$) ranging from .3 to .8 and battery weight fractions ($\bar{W}_B$) from .1 to .3 for lead-acid, nickel-iron, and nickel-zinc batteries. Using these results, values of $\bar{P}_{HE}$ and $\bar{W}_B$ were obtained at which the following limiting values were achieved:

1. Manufacturing cost limitation (taken to be 1.4 x manufacturing cost for the reference vehicle).
2. Battery peak power limitations (taken to be 100 w/kg for lead-acid batteries, 150 w/kg for nickel-iron and nickel-zinc batteries).

The resultant boundary curves were plotted, and regions of acceptable values for $\bar{P}_{HE}$ and $\bar{W}_B$ obtained for the three battery types. The results are shown in Figures 4-1 to 4-3.

As expected from the standpoint of manufacturing cost limitations, the region of acceptable values of ($\bar{P}_{HE}$, $\bar{W}_B$) is considerably smaller for nickel-zinc and nickel-iron batteries than for lead-acid.

The region of values of $\bar{P}_{HE}$ and $\bar{W}_B$ was reduced still further to those values which are close to the line segments AB in Figure 4-1 to 4-3. For example, in Figure 4-1, it can be readily shown (see Section 3.1.1 of Appendix B for details) that the vehicle represented by point P is heavier, costlier, and less fuel efficient than the one represented by P'.

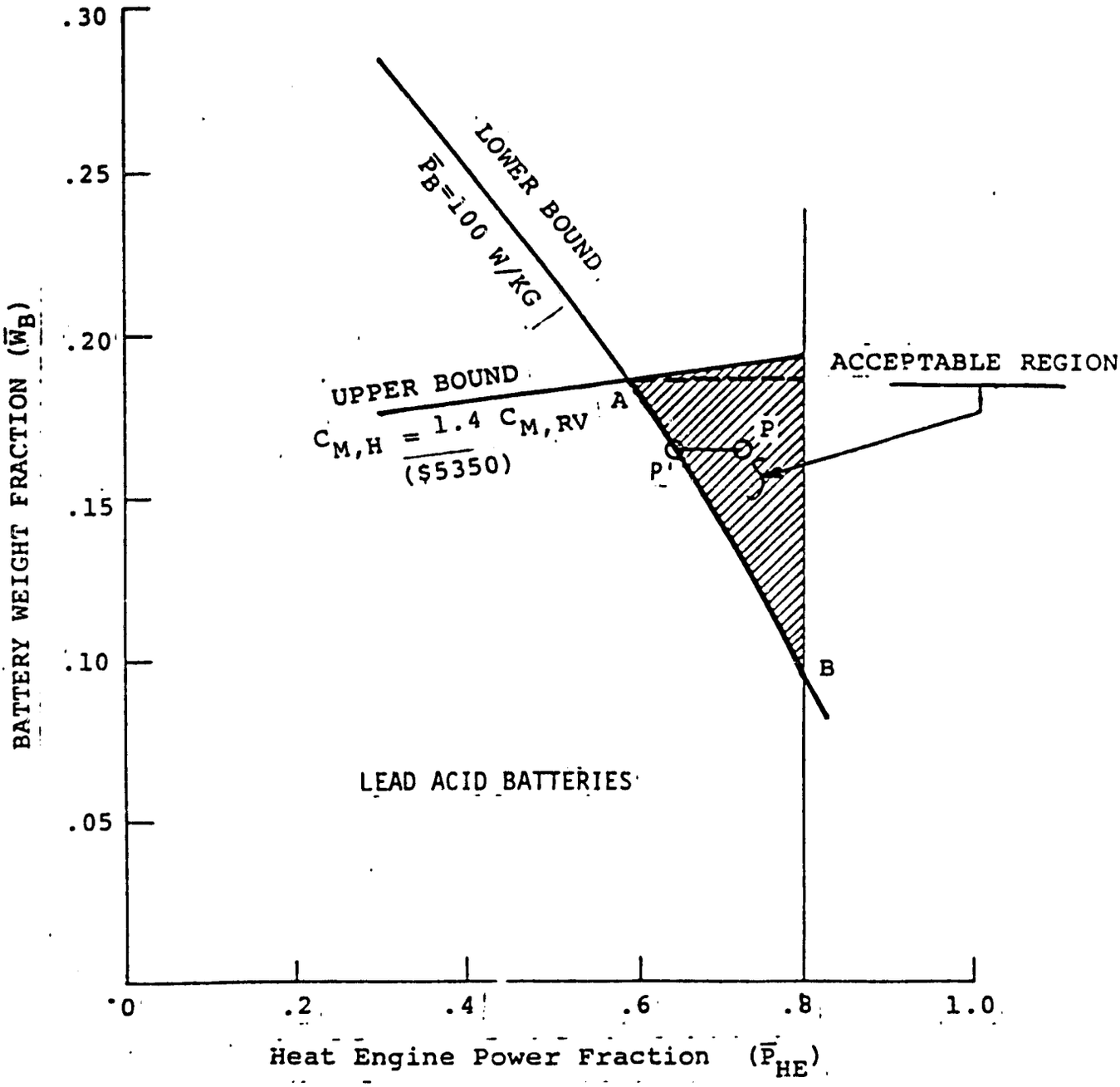

Figure 4-1. Acceptable Range of Basic Parameters

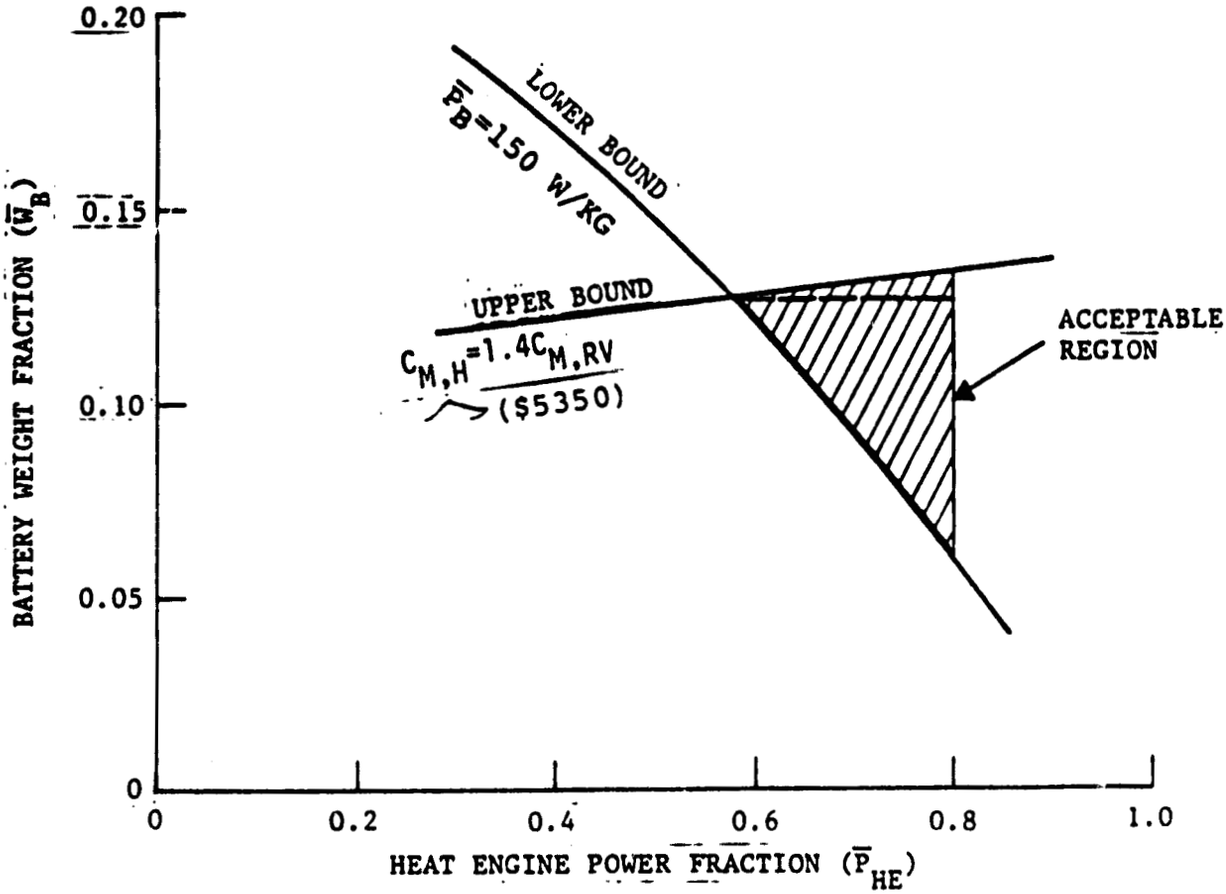

Figure 4-2 Acceptable Range of Basic Parameters (Nickel-Iron Batteries)

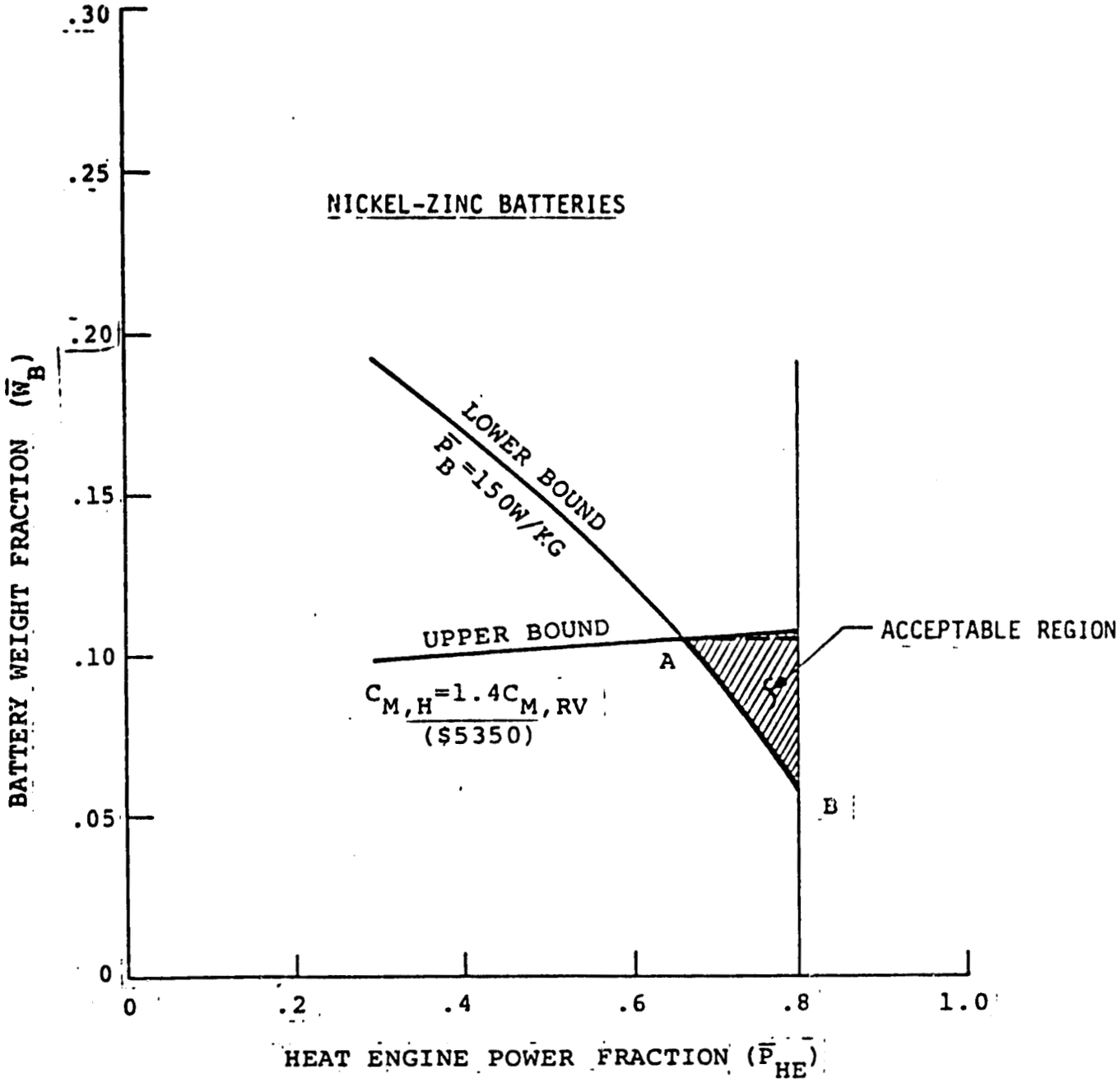

Figure 4-3. Acceptable Range of Basic Parameters

Fuel and Energy Consumption and Life Cycle Cost Estimates

To estimate fuel and energy consumption, each of the configurations was run on the HYBRID simulation program with various values of the control parameters P_{EOMIN} and D_{BMAX}. In general, values of the heat engine cut-in power P_{EOMIN} from 7 kw up to 20 kw were used except where the traction motor was not capable of delivering 20 kw, and the range of the battery discharge limit was from .4 to .8. The projected in-use fuel economy for these cases ranged from a low of about 12 km/l (28.2 mpg), to a high of 24 km/l (56.4 mpg). Wall plug energy consumption ranged from .1 kw-hr/km up to .26 kw-hr/km.

For the purposes of these system level tradeoffs, life cycle costs were computed on two bases, which provide upper and lower boundaries for the hybrid pricing situation which is likely to occur in the real world. The first (nominal) case corresponds to the assumptions provided by JPL; i.e., retail price = 2 x manufacturing cost in all cases, and retail price of replacement batteries = 2 x OEM cost. The second case corresponds to the manufacturer adding the minimum possible retail price increment to cover the added manufacturing costs of the hybrid over the reference vehicle, and battery OEM costs (both original and replacement); this means adding about 1.25 times the manufacturing or OEM cost increment to the retail price of the reference vehicle.[9]

The average gasoline and electricity prices used in estimating life cycle cost over the period 1985-1995 were $1.10/gal. and 4.5¢/kwh (1978 $). These values were based on JPL projections.

Plots of life cycle costs vs. fuel consumption are given in Figure 4-4 for the nominal cost case and in Figure 4-5 for the minimum cost increment case, for lead-acid batteries. The individual curves plotted in these figures show the variation of fuel consumption

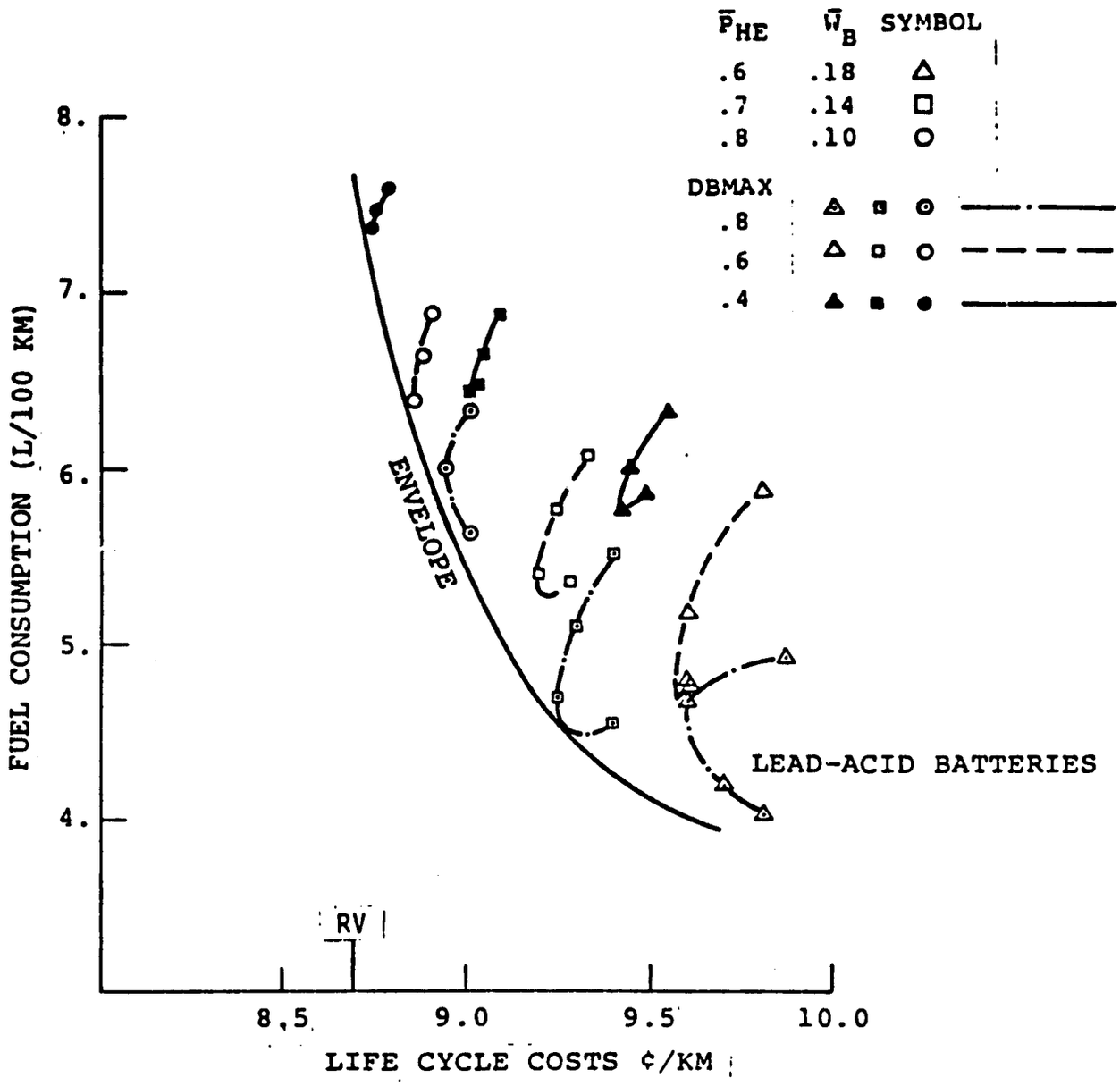

NOMINAL COST CASE-RETAIL PRICE-2xMFG COST
BATTERY REPLACEMENT PRICE-2xOEM COST

Figure 4-4. Hybrid Vehicle Life Cycle Cost Vs. Fuel Consumption

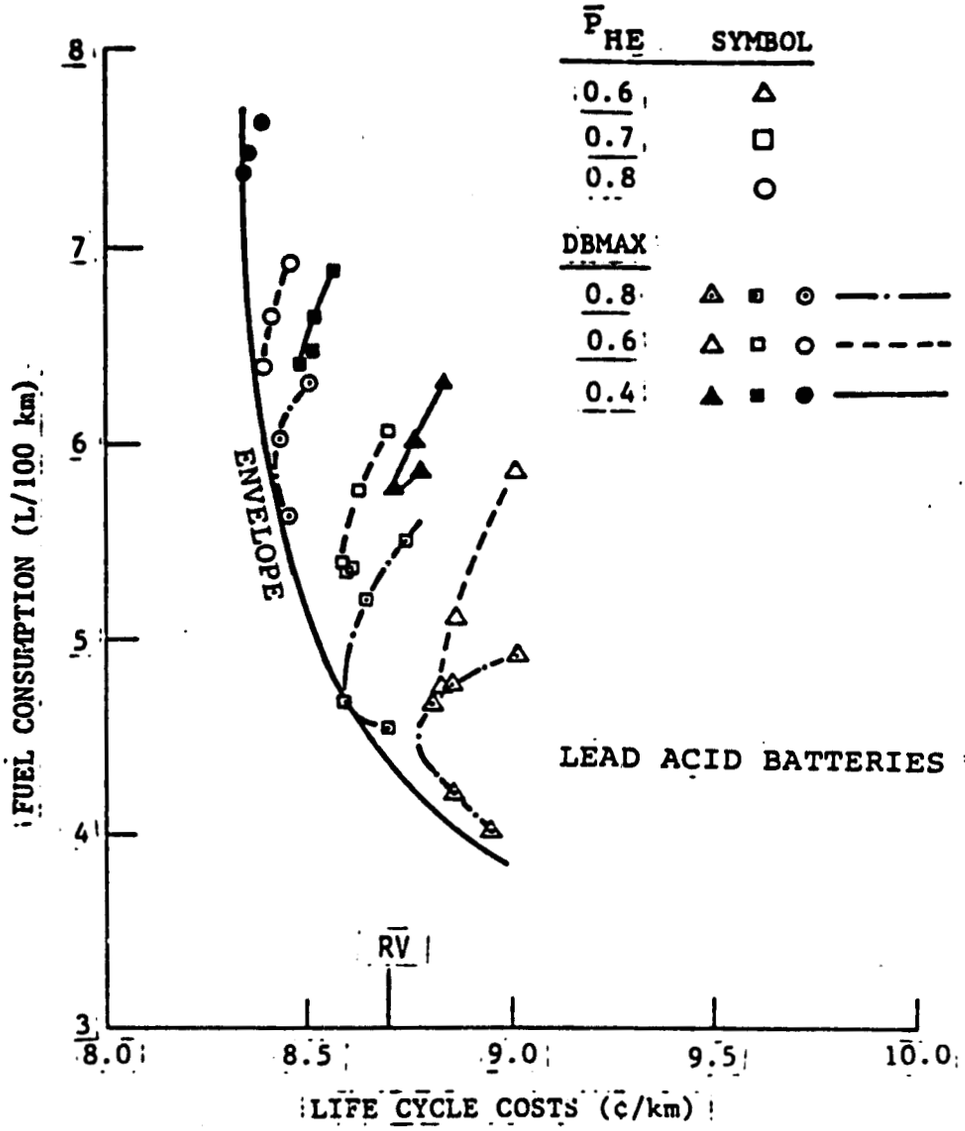

MINIMUM COST CASE - RETAIL PRICE = 2 x MFG COST (Ref. Vehicle) +1.25 x Δ MFG COST (Hybrid - Ref Vehicle)

BATTERY REPLACEMENT PRICE = 1.25 x OEM COST

Figure 4-5. Hybrid Vehicle Life Cycle Cost vs Fuel Consumption

and life cycle cost as the control parameter P_{EOMIN} is varied, for a fixed combination of basic parameters ($\bar{P}_{HE}$, $\bar{W}_B$) and a fixed battery discharge limit (D_{BMAX}). Note that lower life cycle costs are favored by using a larger heat engine power fraction and smaller battery weight, and by not discharging the battery pack too deeply. Low fuel consumption, on the other hand, is favored by the reverse - smaller heat engine, larger battery, deeper discharge

The approximate envelopes plotted in Figures 4-4 and 4-5 represent the locus of points corresponding to the best attainable combinations of fuel consumption and life cycle cost; in other words, points to the left of these envelopes are unrealizable under the constraints and assumptions on which the fuel consumption and life cycle cost analyses are based. It is evident that the envelope has a 'knee' to the right of which life cycle cost goes up more rapidly than the reduction in fuel consumption, and to the left of which fuel consumption goes up rapidly without much reduction in life cycle cost. This is perhaps most evident in the minimum cost increment case, Figure 4-5. For lead-acid batteries, the cases which are grouped in the vicinity of this knee are those for heat engine power fractions of .6 and .7, with battery discharge limits between .6 and .8.

In studying these curves, it should be noted that the projected life cycle cost for the reference vehicle is 8.7¢/km at nominal gasoline prices. This is to the left of the knee of the curve for the nominal price cost, and just about at the knee for the minimum cost case. In view of the preliminary nature of these studies, and the high priority placed in the Near Term Hybrid Vehicle Program on minimizing

fuel consumption, we selected a heat engine power fraction of about .65 as a starting point for the subsequent detailed tradeoffs rather than the right hand end of the .6 to .7 interval. The associated battery weight fraction should be about .17.

The curves for nickel-iron showed a little different behavior than for lead-acid; principally, the goal of attaining a life cycle cost competitive with the reference vehicle appeared to be more nearly attainable. These curves are shown in Section 3.1.2 of Appendix B; it suffices to say here that the shape of the nickel-iron curves led to the conclusion that a heat power fraction only slightly higher than that used with lead-acid batteries is appropriate for nickel-iron batteries.

The nickel-zinc batteries showed life cycle costs considerably higher than the others, even at high values of heat engine power fraction. Even though the battery weight fractions investigated were low enough to keep the manufacturing cost within the constraints described earlier, the frequent replacement of the battery pack (half the life of lead-acid and less than a third that of nickel-iron) affected life cycle costs adversely.

Based on the above, the three battery types were ranked as follows:

1. Nickel-iron
2. Lead-acid
3. Nickel-zinc

Because of the preliminary and rough nature of the system level studies, we did not feel that this was yet the time to totally

exclude any battery type, and all three types were carried forward into the next level of tradeoff studies. Although the nickel-iron systems appear to have advantages in terms of lower life cycle cost, we elected to use lead-acid batteries for the construction of a hypothetical baseline system due to the fact that the technology is more developed and the batteries better characterized. The other two batteries were later investigated in terms of their relation to this baseline system, as discussed in Section 4.3.2.

4.3.2 Subsystem/Component Level Tradeoff Studies

Baseline Hybrid Vehicle

Based on the results of the system level studies, a baseline hybrid vehicle was constructed with the following basic parameters:

Heat engine peak power = 53 kw (VW Rabbit gasoline)

Traction motor peak power = 30 kw (Siemens 1GV1, separately excited)

Heat engine power fraction = .64

Vehicle curb weight = 2080 kg

Battery type and weight = lead-acid, 355 kg

Battery weight fraction = .17

The heat engine and traction motor are currently available hardware, and they were chosen to give a power-to-test weight ratio slightly in excess of that predicted by the relationship used in the system level studies. For a heat engine power fraction of .64, that relationship predicts a power-to-weight ratio of .0345 kw/kg to give a 0-90 kph time of 15 sec.; the power-to-weight ratio chosen for the baseline vehicle is .0374 kw/kg. This was done to ensure that the

minimum performance requirement would be met at all battery states of charge down to the discharge limit.

The configuration of the baseline hybrid vehicle was based on some preliminary tradeoffs with respect to the system mechanical configuration and the type of armature current control. These tradeoffs are discussed in detail in Section 3.2.1 of Appendix B. They resulted in a system mechanical configuration in which the heat engine and the traction motor are coupled together with their combined output driving a 3-speed automatic transmission with lockup torque converter. The heat engine is equipped with a clutch which allows it to be decoupled from the system. The alternative considered involved using a torque converter only on the heat engine output; however, the mechanical complexities and cost associated with this arrangement did not appear to be worth the very minor fuel economy benefit which it provided.

The motor control study led to the conclusion that a limited power armature chopper would be preferable to one which would handle the peak motor power. The reason for this is that, with the use of a transmission, armature control is required only at very low vehicle speeds; field control is used over the major portion of the vehicle's speed range. In this low speed range, maximum motor power is not required to achieve acceptable acceleration and gradeability; consequently, a limited power chopper is adequate and has a definite cost advantage.

The control strategy used for the baseline hybrid was similar to that described in Section 4.2.1 for the system level studies;

however, instead of cutting the heat engine in when the system output reached a minimum power level during Mode 1 operation, the cut in point was determined by a minimum torque level, T_{EOMIN}. A value for T_{EOMIN} of 45 n-m was found to be best; this resulted in a bsfc on Mode 1 of less than 320 g/kw-hr, or within 15% of the best bsfc. This strategy had one disadvantage: it required the electric motor to operate at power levels well above its nominal rating when operating on Mode 1 at high motor speeds (above 3000 rpm). Consequently, a revised control strategy was constructed in which the heat engine cut-in point occurred when the system demand exceeded a certain torque level T_{EOMIN}, as long as the speed was such that the corresponding power did not exceed a maximum level P_{NOM}. If the power determined by T_{EOMIN} and the motor speed exceeded P_{NOM}, then the cut-in point was determined by P_{NOM}. Fuel economy with this strategy was almost identical to the one which used only torque to determine the heat engine cut-in point. This strategy, which tries to keep the heat engine operating above a minimum torque level, but also avoids excessive power demands on the electric motor and battery, was consequently adopted for the baseline vehicle.

Effects of Vehicle Parameter Variations from Baseline

The effects of changes in rolling resistance, drag coefficient, and vehicle mass on fuel economy, wall plug energy consumption, and 0-90 kph acceleration were determined using the computer simulations. These effects may be summarized as follows (for more detailed discussion, see Section 3.3 of Appendix B).

1. Rolling Resistance. The influence coefficient of rolling resistance on fuel economy is about -.5; i.e., a 10% increase in rolling resistance results in about a 5% decrease in fuel economy, and inversely. The influence on wall plug energy consumption is almost negligible; the reason for this is that, during most of the year's driving, the battery is discharged to the discharge limit. Consequently, on those days the energy consumption is essentially fixed. It is only on the days on which the battery discharge limit is not reached that the rolling resistance has an effect on energy consumption. The effect of rolling resistance on the 0-90 kph time is also small since most of the energy expended in this time goes into vehicle kinetic energy.

The baseline value of rolling resistance used was .01, which we feel is realistic for 1985 production tires. A 10% improvement in rolling resistance from this value results, monentarily, in about a $150* fuel savings over the life of the vehicle. Consequently, any associated increment in tire price should be kept within these bounds (pro-rated over the total number of tire sets needed).

2. Drag Coefficient x Frontal Area. The influence of the C_DA product on fuel consumption is about -.4, not a great deal less than that of rolling resistance. The reason for this is that a large part of the fuel consumption of the hybrid occurs on days with a lot of travel (since on the low travel days, it makes heavy use of stored

* For assumptions with respect to fuel and electricity prices, see Figure 2-13 of Appendix B.

energy). On these long travel days, there is a lot of highway travel; and under these conditions, aerodynamic drag represents a significant energy expenditure.

The baseline value of C_DA was .872 m^2, corresponding to a drag coefficient of .4 and a frontal area of 2.18 m^2 (23.5 ft^2). We feel that this represents a reasonable and achievable goal for a full-size sedan in the 1985 time frame. In monetary terms, a 10% reduction in drag coefficient from this baseline value is worth about $120 over the life of the car.

Vehicle Mass

The influence coefficients of vehicle test mass on fuel economy and 0-90 time are, respectively, about -.9 and 1.0. The weight influence on fuel economy for the hybrid is similar to that for a conventional car; however, due to its much lower fuel consumption to start with, it means much less in absolute terms for the hybrid. At nominal fuel prices, a 10% decrease in vehicle mass means about a 10% reduction in fuel consumed, with a present value of about $300. On a strictly economic basis, this means that the retail price of the car should not increase by more than $1.35 per kilogram of weight saving, or about 60¢/lb.

From the manufacturer's standpoint, weight savings are of significance only if they permit him to lower a car's inertia weight classification and if the fuel economy the car starts with is low enough so that the change in inertia weight class and resultant fuel economy increment is significant in improving the manufacturer's CAFE. (The difference between the effects of making changes in high mileage and low mileage cars on CAFE was discussed in Appendix A, pp. 48-49.)

Although the hybrid is in a high inertia weight classification, it is a 35-40 mpg vehicle; and consequently, improving its mileage further does not mean a whole lot to the manufacturer's CAFE. In this respect, the hybrid is equivalent to a subcompact car in terms of its effect on his CAFE; and the way to use such cars to improve CAFE is to sell them at acceptable prices rather than attempt to extract the ultimate fuel economy through the use of high cost techniques that must also be passed on to the ultimate consumer. The hybrid will have a substantial price increment over a conventional car which will tend to restrict its market share; a manufacturer would obviously try to keep this increment to a minimum to avoid restricting that market any more than is absolutely necessary.

It comes down to a question of where the manufacturer (and, eventually, the consumer) puts his money. If he elects to stay with a conventional vehicle design, then weight reduction becomes extremely important in reducing his CAFE, and spending money on exotic materials may become worthwhile for him. On the other hand, if he elects to introduce a hybrid, that step alone can get him where he needs to be in terms of fuel economy; increasing his (and the consumer's) expenditure beyond that step does not make a whole lot of sense.

On the basis of these considerations, we came to the conclusion that, at the <u>most</u>, the same weight reduction techniques used in 1985 production conventional cars would be used in the hybrids.

Effects of Propulsion System Parameter Variations from Baseline

Propulsion system parameters which were investigated were the following:

- Heat engine power rating
- Final drive ratio
- Battery type
- System voltage

In addition, several variations in control strategy were also investigated. Variations in motor power rating and battery weight were not investigated except insofar as changes in these parameters were appropriate when considering batteries other than lead-acid. The reason for this is that the heat engine power fraction and battery weight fraction for each of the three battery types considered were localized fairly well in the system level studies.

1. Heat Engine Power Rating & Final Drive Ratio. The influence of the heat engine power rating on fuel economy is about -.3, on acceleration time about -.8, and on wall plug energy consumption, negligible. Consequently, it would be possible to reduce the 0-90 kph from the baseline value of 14 sec. to something more in line with current practice (about 12 sec.) with a fuel economy penalty of about 5.4%. It was found, however, to be more desirable to change the final drive ratio and transmission gearing to improve performance somewhat without sacrificing fuel economy. It was found that the influence coefficients for the final drive ratio were about .17 on fuel economy, -.16 on energy consumption, and -.32 on 0-90 kph time. The fact that fuel economy increased and energy consumption decreased

with an <u>increase</u> in final drive ratio was surprising; however, this indicated that the baseline definitely had too 'tall' gearing and, as a result, spent too much time in the stop-and-go cycles in first gear in which the transmission efficiency is lower and the torque convertor is not locked up. This effect apparently outweighs the improved high gear efficiency which results from the higher engine loading and lower bsfc with the tall gearing. The difficulty with increasing the final drive ratio is an increase in engine RPM at normal road speeds. The baseline gearing provides nearly the same RPM at a given road speed as in the VW Rabbit. Engine speeds much higher than this under cruising conditions would be, we believe, unacceptable to the buyer of a full-size American car since such a buyer is used to a total lack of mechanical 'busyness' at normal cruising speeds. Because of this, and because the performance of the baseline hybrid was a bit too marginal for the class of vehicle being considered, we felt that a better approach would be to go to a higher rear end ratio without downsizing the heat engine, and add an overdrive ratio to the transmission. This provides a slight fuel economy improvement, better acceleration performance, and a much better combination of gradeability and lack of fuss at highway speeds.

2. <u>Control Strategy Variations</u>. The control strategy utilized for the baseline hybrid made decisions regarding the operation of the heat engine and electric motor based on two variables - system power demand and input speed to the torque convertor (or, equivalently, power and torque). This resulted in high continuous battery output in Mode 1 in highway driving. To cut this output back to a more

reasonable value, a modified control strategy was tried in which the heat engine operates (whenever the system demand is positive) if the vehicle speed is above a certain value. The value used was 20 mps (72 kph, or 45 mph). This change resulted in a 4% improvement in fuel economy, along with a reduction in average battery output on the highway driving cycle to a level more in accord with the sustaining power capability of ISOA batteries.

Up until this point, the transmission shift logic used was similar to that of a conventional transmission: a decision to upshift or downshift is made on the basis of transmission input (torque convertor output) speed and accelerator pedal position. However, no distinction was made in determining the shift points, between heat engine on and heat engine off conditions, or between Mode 1 and Mode 2 operation. This resulted in closed throttle downshift points which were too low to provide effective regenerative braking. Consequently, the shift logic was modified so that, with the heat engine off, the shift points were based only on the motor characteristics to provide effective regenerative braking. The shift logic with the engine operational (accelerating and cruising) was still based on keeping the engine bsfc as low as possible. With the incorporation of this change (along with the previous change to include vehicle speed sensitivity), fuel economy improved by another 6%.

These studies brought us to the conclusion that an optimal control strategy must be sensitive to the system power demand, and both transmission input speed and vehicle speed; also, the transmission shift logic must differentiate between engine on and engine off conditions.

3. Variations in Battery Type. The cases considered, including the baseline, are shown in Table 4-1. The same 53 kw heat engine was used for all three cases; thus, the increased heat engine power fractions for the nickel-iron and nickel-zinc cases resulted from the decreased motor power needed to maintain the same acceleration requirement with a reduced vehicle weight. The reduction in vehicle weight takes into account the reduction in battery weight, along with a 20% weight propagation factor. The performance and life characteristics assumed for the three battery types are shown in Figures 4-6 and 4-7. All these characteristics were based on the ANL goals for ISOA batteries, at the time the study was performed.

The results for the three battery types may be summarized as follows: fuel economy values for the lead-acid and nickel-iron batteries were virtually identical, with the nickel-zinc configuration returning about 7% better fuel economy than the first two types. However, due to differences in life characteristics, the nickel-iron configuration showed a slightly lower life cycle cost than lead-acid (by about .5¢/km), and the nickel-zinc configuration a considerably higher cost (1.7-2.9¢/km, depending on battery retail pricing strategy) than the baseline lead-acid configuration.

The conclusions, therefore, remained the same as those drawn from the system level studies: Assuming that all three battery types have equal probabilities of attaining the ISOA development goals, the nickel-iron battery has an economic advantage over lead-acid; and nickel-zinc is a rather poor third.

Table 4-1 . PARAMETERS FOR ALTERNATIVE BATTERIES

Parameter	Lead-Acid (Baseline)	Nickel-Iron	Nickel-Zinc
Battery weight (kg)	355	270	210
Nominal battery capacity (kw-hr, 3 hr rate)	14.2	13.5	14.7
Maximum motor power (kw)	30	26.8	24.5
Vehicle Curb weight (kg)	2080	1978	1906
Heat Engine Power Fraction	.639	.664	.684
Battery Weight Fraction	.171	.140	.110

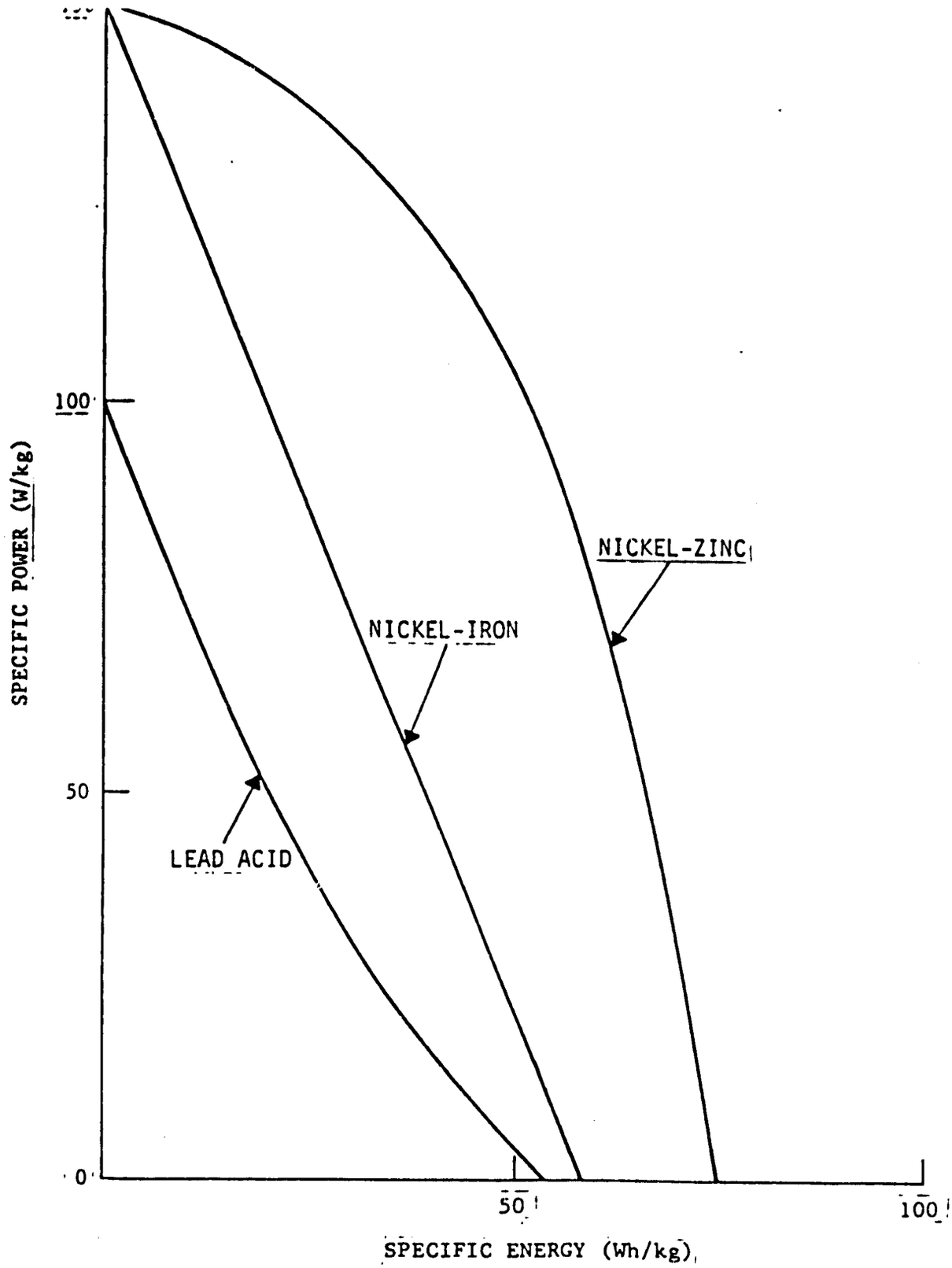

Figure 4-6 ISOA Battery Characteristics

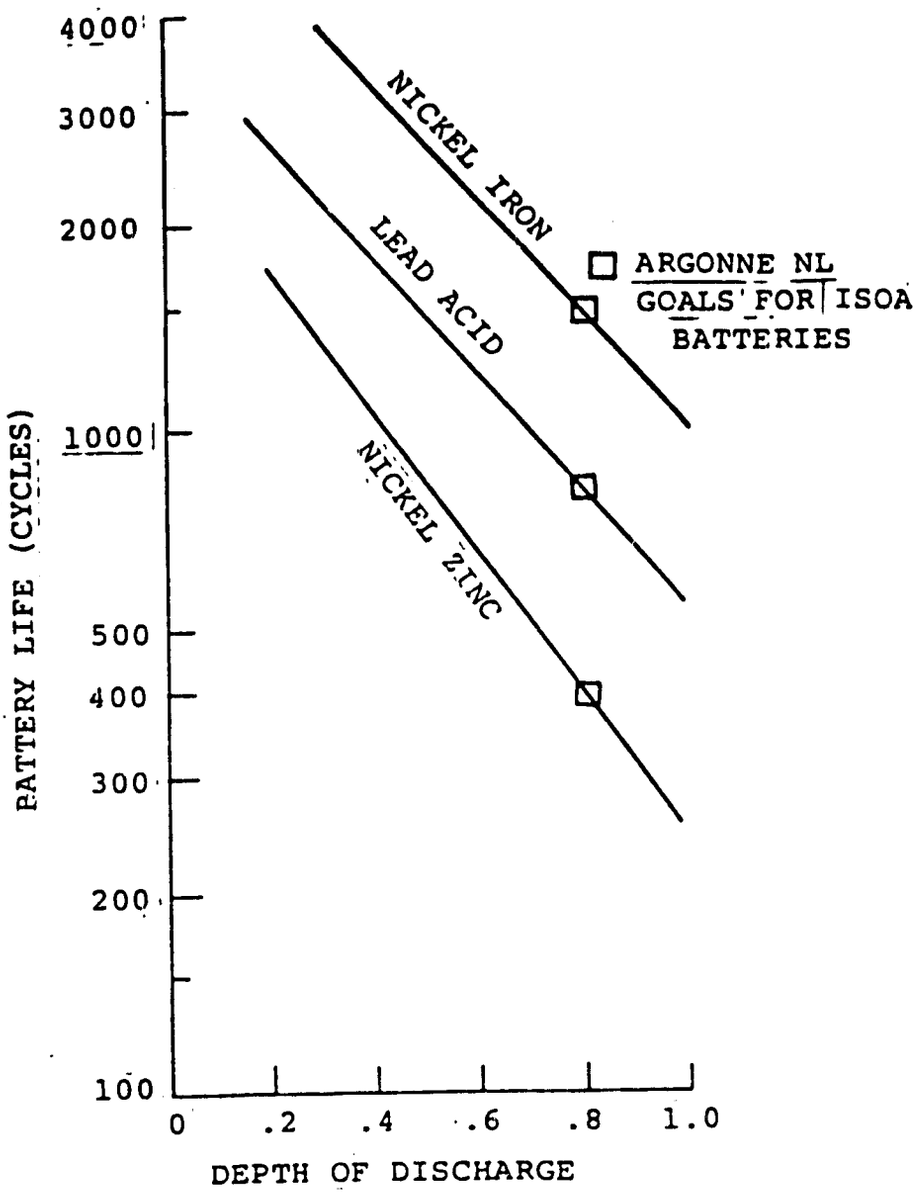

Figure 4-7. Battery Life Characteristics

A critical appraisal was subsequently made of the battery development situation relative to the attainment of these goals, and the conclusions drawn were the following: Although all three battery types are making substantial progress toward the attainment of these goals, there are more unknowns associated with the nickel-zinc system than the lead-acid system, and a lot more associated with the nickel-iron system. In view of its potential life cycle cost advantages (as well as vehicle related advantages, such as lower weight), we concluded that the nickel-iron system should be pursued but with a lead-acid backup. For this reason, both these systems were carried into Task 3 (Preliminary Design); however, the nickel-zinc system was dropped.

4. System Voltage. The studies described in the previous sections did not explicitly consider system voltage. The assumption was made that the ISOA battery goals could be met with a battery pack designed for the nominal voltage of the Siemens motor used in the baseline design, which has a design center of 130 V (nominal 144 V battery pack). We shall now examine the validity of this assumption and the tradeoffs involved with respect to system voltage.

In general, increasing battery voltage while keeping the same physical constraints on the battery means a smaller and less efficient cell design; cell connectors and partitions become a larger percentage of the total battery mass and specific energy drops. Now, in the case of lead-acid batteries, the volume and weight assumed for the baseline hybrid correspond approximately to 12 modules of the same size as golf cart batteries, which is the module size for which

the ISOA lead-acid battery development is being carried out. Thus, the battery weight and volume would correspond to a 72 V system, rather than 144 V. In an attempt to ascertain the voltage tradeoffs involved, both the motor manufacturer Siemens and battery manufacturers were asked to estimate the differences in their products at voltage levels of 72 and 144 V.

With respect to the motor, the conclusion was that decreasing the nominal battery voltage from 144 to 72 V would do the following:

- Increase the motor OEM price by $160 (100,0000 units/year)
- Decrease the typical operating efficiency from 82% to 78%. This corresponds to a reduction in average efficiency of about 4%.
- Increase motor weight by 6-7 kg.

The battery manufacturers who responded were somewhat less definitive in terms of the magnitude of the effects of increasing system voltage from 72 to 144 V. From the responses, we came to the conclusion that the specific energy would drop 10 to 20% at the higher voltage. Cost per kg would not change significantly; so, if the same weight and package size were maintained for each battery type, available energy would drop 10-20%, and the battery cost would not change significantly.

Assuming the worst, i.e., a 20% decrease in battery specific energy associated with the higher voltage, the simulation results gave about a 9% decrease in fuel economy and a 9% decrease in energy consumption. For the baseline case, this amounts to an increase in the prevent value of fuel consumed of about $250 and a decrease in energy value of about $160, for a net increase of $90.

On the other hand, if we reduce the battery voltage and take the slightly less efficient and more costly motor, the fuel consumption increases relative to the baseline by about 5% and energy consumption by 2%. The corresponding present values of fuel and energy consumed are about $130 and $30.

The conclusion reached is the following: If we stay with the approximate voltage implicit in the motor selection for the baseline system and adopt a more realistic estimate of what we are likely to get in terms of battery specific energy at this voltage, we come up with a total cost penalty of about $90. If we lower the motor voltage to an appropriate value to get the ISOA battery specific energy, the cost penalty is about $320.

The cost tradeoffs for the hybrid, thus, appear to favor the sacrifice of specific energy to obtain a higher voltage system, if one considers only the motor and battery. As far as the controller is concerned, it would be beneficial to keep the nominal system operating voltage down to about 120 V to avoid having to go to more expensive, triple-diffused transistors in order to obtain a peak voltage rating which would be required at a system voltage in excess of 120 V. (See discussion in Section 3.5.4 of Appendix B) A 120 V nominal system voltage would involve only a slight degradation in motor characteristics, and a slight improvement in battery characteristics when compared to a 144 V system. Thus, the final adjustment of nominal system voltage can be made on the basis of controller economics; and on this basis, a 120 V system was chosen.

Alternative Design Approaches

1. Use of Flywheels as Energy Buffers. In order to limit the instantaneous power output required from either or both of the heat engine and traction motor, a flywheel could be used to release energy during acceleration and store it during deceleration. There are theoretical advantages in doing this:

- The ability to store energy during decleration is not limited by the power capacity of the electric motor/generator, or by the battery's ability to accept charge at a high rate (which is a function of its state of charge).
- The output of the battery can be load levelled so that it is nearly a constant current discharge. This is favorable in terms of maximizing the available energy from the battery at a given average discharge rate.

The disadvantages of using a flywheel as an energy buffer are of a practical nature. They include:

- High overall system complexity, in terms of both mechanical layout and controls.
- Some form of continuously variable transmission is required between the flywheel and the rest of the drivetrain for speed matching.
- Composite flywheels appear to be the only type which have a chance of providing acceptable energy density, and the status of technology of these devices appears to be highly tenuous relative to a 1985 production target.

Because of the potential advantages of an energy buffered system, we conducted a critical survey of the state-of-the-art of flywheel technology to assess its applicability to the near term hybrid vehicle. This study is discussed in detail in Section 3.5.1 of Appendix B. The conclusions drawn from it may be summarized as follows: Quantity production of flywheels, as major elements in an electric or hybrid automobile drivetrain, is not foreseen prior to around 1990. Given this long a lead time, prototypes in 1980 could not be very representative of future production designs, and a demonstration of such would not be instrumental in bringing about quantity production by 1985. Although present technology will support the construction of experimental machines of great educational value, such models should not be regarded as prototypes for mass production in 1985. As a consequence, a system using a flywheel as an energy buffer would not be a viable alternative for the near term hybrid.

2. Alternatives to Naturally Aspirated Gasoline Engines.

(a) Diesel: The prechamber diesels normally used in passenger cars offer higher fuel economy than Otto cycle engines primarily because of lower fuel consumption under light load; the minimum bsfc under heavy load may not be more than 10% better than an Otto cycle engine. Consequently, the fuel economy advantage of a prechamber diesel over a good gasoline engine largely disappears when the engine is operated like it is in the hybrid, i.e., only under relatively high load.

Against the minor fuel economy improvement attainable by using a diesel in the hybrid must be weighed the following:

- Greater cost and weight than a conventional gasoline engine of the same output.
- Poor cold start characteristics.
- Problems with respect to control of particulate and NOx emissions.

As a result of these considerations, we came to the conclusion that utilization of a diesel in the near term hybrid would not be desirable because of the added cost and development problems associated with only a small improvement in fuel economy (on the order of 10%) in an already fuel efficient system.

(b) Stratified Charge: Stratified charge engines fall into both open chamber and prechamber categories. The open chamber engine which is closest to production is Ford's PROCO. Like the diesel, the open chamber stratified charge engine obtains most of its fuel economy advantage from low fuel consumption at light load; consequently, its fuel economy advantage over a conventional engine, in the hybrid application, will be small. Also, like the diesel, these engines have a lower specific output and will cost more to manufacture than a conventional engine; however, the penalties in these areas are not as severe as with a diesel.

We concluded on this basis that if a manufacturer did not already have a small open chamber SC engine developed for a small car line, he would be unlikely to develop one specifically for a hybrid application in preference to a conventional spark ignited engine.

For this reason, and due to the fact that Ford's current emphasis is on large PROCO engines and small four cylinder production PROCO's are not in the offing, a PROCO or other open chamber stratified charge engine would not be an attractive alternative for the near term hybrid vehicle

The prechamber stratified charge engine, as exemplified by the production Honda CVCC engine, has one major advantage, and that is relatively low uncontrolled emissions. The engine has no advantage over a conventional engine in terms of fuel economy (in fact, appears to have narrower speed range over which it has low bsfc), and has lower specific output. Consequently, we saw no reason for choosing it over a conventional engine.

(c) Turbocharging: Turbocharging offers the advantage of raising the maximum bmep of an engine without significantly affecting the bsfc at lower values of bmep. Thus, for a given power rating, using a small turbocharged engine provides better fuel economy than a large naturally aspirated engine, in a conventional vehicle. The amount of improvement to be gained in a hybrid application, however, is less since, even with a naturally aspirated engine, the hybrid spends most of its time operating close to the minimum bsfc region.

Apart from the minor fuel economy benefit, there would be a problem of scale in attempting to use a turbocharged engine of the same peak output as that of the baseline (53 kw). Such an engine would probably be only 1000 cc or less in displacement, and there are virtually no modern engines to work with in this size range except for motorcycle engines which lack the emissions control technology

and low production cost associated with passenger car engines, as well as their durability.

As a consequence, we would regard turbocharging as an alternative (to increased engine size) method of obtaining higher performance than that provided by the baseline hybrid, at little or no fuel economy penalty, using the same engine size as in the baseline. Using it to downsize the baseline engine and keep the same performance level would not be particularly useful.

3. Alternatives to Separately Excited DC Motor. Three methods of motor control were considered in addition to the DC motor with separately excited field. These were

- Thre phase AC motor/invertor
- DC (series field)
- DC (permanent magnet field)

A detailed discussion of the advantages and disadvantages of each of these techniques, along with the baseline separately excited DC motor, is given in Section 3.5.3 of Appendix B. The conclusions reached with respect to these alternatives may be summarized as follows:

(a) 3-Phase AC Motor/Invertor: This system offers many advantages in terms of motor design (smaller, lighter, cheaper, less maintenance); however, it requires the use of an inverter which is both large and, at the present state-of-the-art, very expensive. Alhtough electric and hybrid vehicles may ultimately utilize AC drives, their implementation in production will have to await the development of much lower cost production methods for high power

switching devices. We do not see this happening in time for this motor and control technology to be employed in a 1985 production vehicle.

(b) DC Traction (series field): This type of motor has several major disadvantages - available power drops off rapidly with increasing motor speed (unlike the separately excited motor, which is very nearly a constant power device in the field weakening range); it requires control of full motor current over the entire speed range; and it is difficult to implement a regenerative braking system with it. It has a slight cost advantage relative to a separately excited motor; however, this is far outweighed by the cited disadvantages.

(c) DC/Permanent Magnet: This motor type is inherently very efficient because field excitation is supplied by a magnet which consumes no power. However, at a given armature voltage, the region of high efficiency is limited to a narrow speed and load range. Consequently, like the series motor, it suffers by needing a chopper control of motor current, with its added inefficiency and cost, when both load and speed are varied over a wide range. In addition, PM motors are presently not available in the size required for the hybrid; they are generally only fractional horsepower motors.

As a result of these considerations, we came to the conclusion that the DC separately excited motor using a combination of a limited power armature chopper and field chopper, is the most suitable of the alternatives investigated for the near term hybrid vehicle.

4. Motor Control Alternative. The primary choices here involve the switching elements to be used in the limited power armature chopper and the field chopper: SCR or transistor. Although SCR's have presently a cost advantage over transistors in the power range of interest, there are several disadvantages, including:

a) Low switching frequency, which gives rise to noise problems in the audible range.

b) Circuit complexity.

c) Overall higher weight and lower efficiency than transistor based controllers.

Power transistors have been traditionally relegated to relatively low voltage, low current applications. Only recently have high voltage, high current transistors become available. Because they have only recently been developed, costs tend to be higher. Performance benefits can sometimes outweigh cost considerations, however; and the circuit simplification and reduction in associated high power components usually favors power transistors. Production costs are expected to decrease during the time frame of interest to this program; and, as a result, transistor based designs were selected for both choppers.

5. Transmission Alternatives. The principal alternatives to the three-speed automatic transmission with lockup torque convertor used in the baseline hybrid vehicle were as follows:

- Four-speed (overdrive) automatic with lockup torque converter.
- Continuously variable transmission.

The advantages of the four-speed automatic relative to the three-speed have already been discussed. It provides improved gradeability and acceleration performance, and lower noise and greater smoothness at highway cruising speeds. Consequently, we concluded that a manufacturer would use one in a hybrid, particularly if he had one in his parts bin. It is known that transmissions of this type are under development for production within the next two years by major manufacturers (e.g., Ford); consequently, replacement of the three-speed assumed for the baseline hybrid by a four-speed would appear to be warranted.

With respect to continuously variable transmissions (CVT's), a state-of-the-art survey produced the conclusion that the only unit showing near term promise is the metallic belt drive being developed by Van Doorne's Transmissie B.V. in Holland, and Borg Warner in the U. S. This is well along in development. Units are quite compact, and there does not appear to be any fundamental limitation which would prevent scaling up the existing designs (primarily for small cars) to the power requirements of the hybrid. Advantages of this type of transmission relative to a conventional automatic are the elimination of torque convertor losses and the possibility for obtaining optimum loading of the heat engine at any power demand. Considering these advantages, together with its advanced state of development, we concluded that a more detailed study was warranted to quantify its fuel economy advantages. The results of this study are described in detail in Section 3.5.5 of Appendix B. The major conclusion was that the fuel economy of a hybrid with a CVT would not

be more than 10% better than a hybrid using a wide ratio, four-speed automatic with a fully optimized control strategy and shift logic. This is considerably less than the improvement that would be expected for a conventional car, because the hybrid's heat engine already operates much closer to its minimum bsfc region than a conventional car, and the CVT consequently does not gain much in this regard. The principal gain is due to the elimination of the torque convertor.

We concluded from this that a conventional car is a much better place to put a CVT than a hybrid, in terms of the potential gains in fuel economy. Again putting ourselves in the position of a manufacturer, if a CVT in the right power range were already developed and available for a conventional vehicle and did not cost more to produce than a more conventional automatic, it would be logical to use it in a hybrid vehicle. However, it would probably not be worth the investment to develop one specifically for a hybrid. For the Near Term Hybrid Vehicle Program, the Van Doorne CVT is an interesting possibility with unknowns attached to it in the areas of manufacturing cost and durability; and it is unessential to the basic objective of achieving a very large increase in fuel economy using near term technology. We, consequently, elected to stay with a four-speed automatic with lockup torque convertor.

4.3.3 Supporting Studies and Analyses

Vehicle Layout/Packaging

Based on the results of the Mission Analysis task, we had concluded that the hybrid vehicle design should be a derivative of a 1985 production 6-passenger sedan, and that a suitable choice for

both a conventional reference vehicle and a starting point for the hybrid vehicle design would be the 1985 version of the Ford LTD. Our analysis and judgment led us to conclude that there would be little change in terms of packaging and vehicle layout between the current LTD and its 1985 counterpart. Consequently, the packaging task became a practical, matter-of-fact job using actual 1979 Ford LTD dimensions and layout as the base to work within.

The results of this study indicated that the basic propulsion system hardware fits within the existing engine compartment, and there are several alternative battery layouts that offer acceptable weight distribution, safety, and accessibility. These layouts involve packaging the batteries either in a single compartment within the trunk, or in multiple compartments within the trunk and under the seats. Although the multiple compartment layouts offered advantages in terms of improved weight distribution, a single compartment location in the trunk was eventually selected because of the greater manageability of problems of ventilation, thermal management, and single point watering and venting for all battery cells.

Material Substitution/Weight Reduction

In defining the material substitution likely to be made, and resultant weight reduction potential, for a 1985 vehicle, one must first decide if any radical approach will find its way into a relatively high volume passenger car, regardless of the beneficial effect it would have on weight reduction and, thus, fuel economy. The 1985 model year is near at hand to the auto industry that must make its long lead decisions 5-7 years in advance. This led us to conclude

that there would not be a high volume aluminum or plastic composite car in 1985. Our review of literature, discussions with auto industry suppliers, and with an auto industry manufacturer confirms our assumption. Aluminum or composite cars may be introduced in 1985 but only in very limited production volumes to prove out technology which might be used in the 1990's on high volume production cars.

Since the downsized LTD, introduced in 1979, is already a very weight effective solution to a large car, we concluded that no major changes would take place between now and 1985 except for a facelift in the early 80's, a material substitution program to reduce weights of selected components, and/or change to a more fuel efficient PROCO or diesel powerplant. The components which were selected as logical candidates for weight reduction, and the candidate alternative materials, were as follows:

		Alternate Materials		
Component	Material	HSLA	Alu	Plastics
Frame	Steel	X or	X	
Bumpers	Steel	X or	X	
Hood Outer	Steel		X or	X
Hood Inner	Steel		X or	X
Deck Outer	Steel		X or	X
Deck Inner	Steel		X or	X
Door Outers	Steel		X or	X
Door Inners	Steel		X or	X
Fenders	Steel		X or	X
Wheels	Steel		X or	X
Power Strng. Pump Hsng.	C.I.		X	
Axle Housing	C.I.	X		
Radiator	CU		X	

To arrive at a weight reduction potential for the changes outlined above, we first determined the material description and weight for a 1979 LTD. A methodology for determining the weight of the equivalent part in aluminum or plastic was developed; this methodology is included in Appendix B to this report.

Application of this methodology, together with cost data for the materials considered, led to the conclusion that selected use of aluminum panels in large cars would be economically justifiable. The frame was excluded, however, because the enthusiastic advertising of the virtues of aluminum frames is not supported when one attempts to find a realistic means to design and built prototype frames.

The initial study indicated surprisingly high prices for the substitution of plastic. However, during the Preliminary Design Task, the study was updated with the help of Sheller-Globe Corp.; and some plastic parts were eventually included in the design. This is discussed in more detail in the Section 5 of this report and Appendix C.

5. NEAR TERM HYBRID VEHICLE PRELIMINARY DESIGN

5.1 General Description

As discussed previously, the NTHV is conceived by SCT to be a roomy, six-passenger vehicle in which the hybrid propulsion system would be incorporated by the manufacturer to allow the retention of the high profitability of this class of vehicle while meeting CAFE requirements for 1985 and beyond. As such, apart from the propulsion system it is an evolutionary development of an existing weight efficient six-passenger vehicle, the Ford LTD, into the 1985 time frame. A summary of the design features and vehicle characteristics is given in Table 5-1. The numbers given in this table are based on the use of nickel-iron batteries. The effects of using the alternative lead-acid batteries will be discussed in Section 5.2 (Propulsion System Description).

Propulsion system layouts and renderings of possible styling treatments are provided with Appendix C to this report. The passenger compartment and frame are identical to the existing Ford LTD; shape changes have been made at the front and rear for improved aerodynamics. The motor and engine can be accommodated nicely in the space formerly occupied by the V-8; however, there is not much room left under the hood for electronics or batteries. Consequently, the motor controls, battery charger, and system controller (microprocessor) are located under the seats, which is a more favorable environment in terms of temperature than under-hood in any case. Motor controls (armature, field chopper, contactors, and associated logic circuitry) are located under the front seat. The battery charger and

Table 5-1 - NTHV Summary Description

1. General

Passenger Capacity	6
Layout	Front Engine - Rear Drive
Curb Weight	1864 kg
Distribution	47.6% F, 52.4% R
GVW	2384 kg
Distribution	43.8% F, 56.2% R
Wheelbase mm	2903
Track mm	1581 F, 1575 R
Length mm	5309
Width mm	1968
Height mm	1385
Ground Clearance mm	123.7
Trunk Space cu.m.	.59
Fuel Capacity	40 liters

2. Propulsion System

Engine	VW Rabbit S.I.
Displacement	1.5 l
Peak power	53.3 kw @ 5800 RPM
Peak torque	99 N-M @ 3500 RPM
Motor	Siemens IGV1, separately excited
Rated power	17 kw
Battery	Nickel-Iron
Rated capacity (3 hr rate, 100% DOD)	14.5 kw-hr (54 w-hr/kg)
Nominal voltage	120

Motor Control:	Transistor Choppers
Field chopper	10 AMP
Armature chopper	140 AMP
Transmission	4 Speed Auto., Lockup on 3rd & 4th
Torque Converter mm	276
Stall Torque Ratio	2.1
Ratios 1st	2.45
2nd	1.45
3rd	1.0
4th	.75
Rev.	2.22
Final Drive	
Ratio	5.12

3. Chassis Systems

Front Suspension	- Unequal length A-arms, coil springs.
Rear Suspension	- Live axle located by radius rods and panhard rod, coil springs.
Steering	- Recirc. ball and roller, power assisted
Brakes	- Hydraulically assisted (hydroboost)
Front	- Disc 11.03" DIA. Vented rotor
Rear	- Drum 10"
Wheels	- 365 x 165 - Composite
Tires	- P205/75R14

4. Body and Structure

Construction	- Separate frame and body.
Materials	- Steel structure, aluminum and plastic front

and including fenders, hood, bumper systems, plastic deck lid and plastic door outers. Other skin panels steel.

system controller are located under the rear seat, along with a fuel tank of about 40 litres capacity. The nickel-iron battery is located just aft of the rear axle. This reduces the trunk capacity by about .07 m^3, from .66 m^3 down to .59 m^3. This is close enough for practical purposes to our recommended specification of .6 m^3, and well in excess of the minimum requirement of .5 m^3.

Description of the design for the various vehicle subsystems is given in subsequent sections.

5.2 Propulsion System

5.2.1 System Description

A block diagram of the NTHV propulsion system is shown in Figure 5-1. It utilizes a 53 kw VW gasoline engine which drives through a hydraulically actuated clutch. This clutch, in conjunction with an ignition on/off switch and the throttle valve, is the means for starting the heat engine and bringing it on line when it is required and disengaging it when it is not. The clutch output is coupled to one end of the output shaft of a transfer case; the other end of the transfer case output shaft drives the torque converter. The input shaft of the transfer case is driven by the electric motor, and the transfer case input and output shafts are coupled by a HY-VO chain and sprockets with a 1:1 ratio. The transfer case, thus, serves as a summing junction for the heat engine and electric motor output torques.

The electric motor is thus always coupled to the torque converter input, and the heat engine also drives the torque converter input

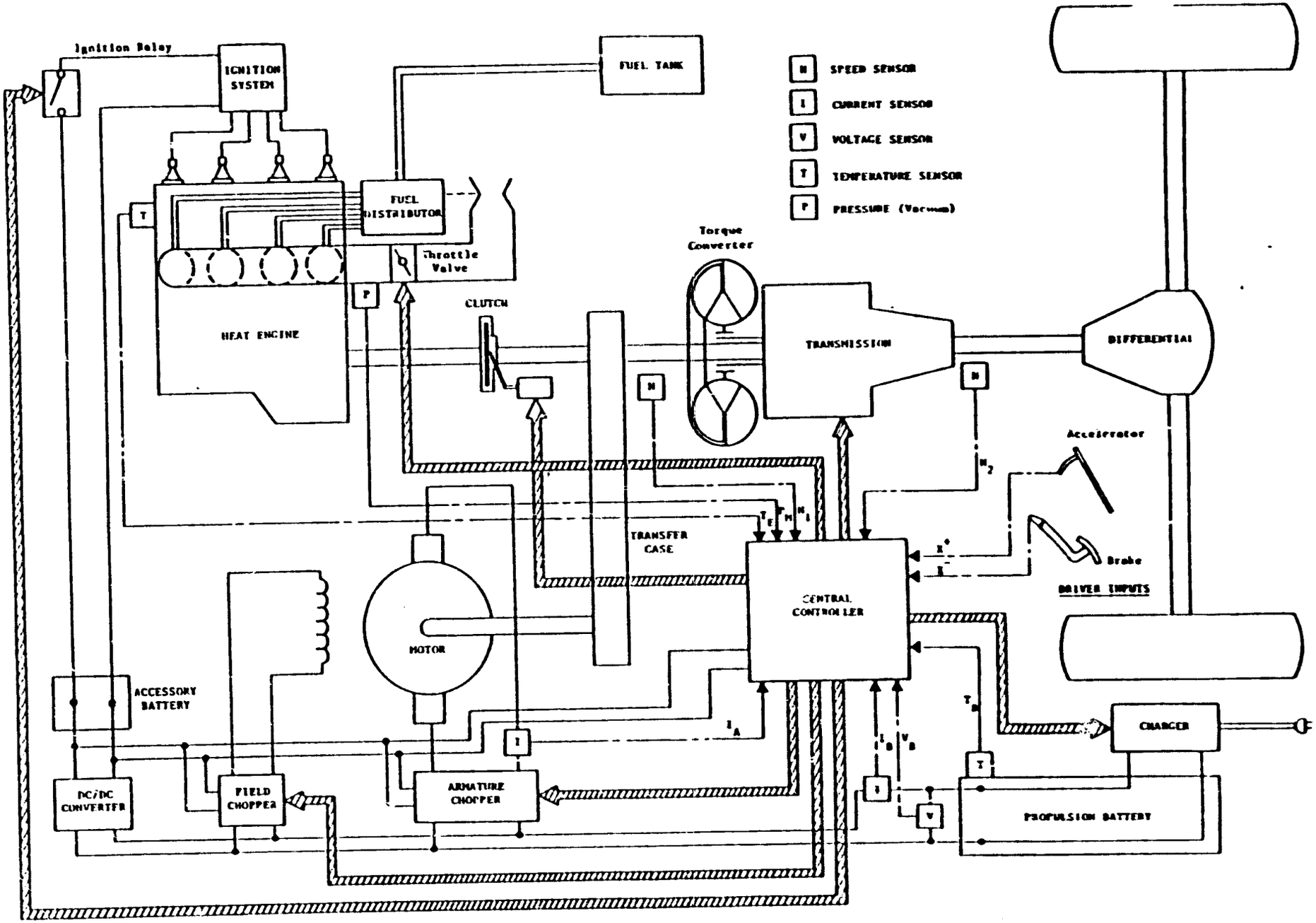

Figure 5-1. Hybrid Propulsion System Block Diagram

when it is required. The torque converter is of the lockup variety; it drives a four-speed overdrive automatic transmission which is of conventional design, except for the modifications and interface hardware required to accept external shift commands from the system central controller.

The electric motor is of the separately excited type, with a peak power rating of 27 kw when used in conjunction with a 120 V nickel-iron battery pack. A rating of 30 kw is required for the heavier lead-acid system. Below base speed, motor speed and torque are controlled by a transistor armature chopper. This chopper is used only at very low vehicle speeds, in first gear. Under these conditions, maximum motor power is not required for adequate performance; consequently, the armature chopper is rated at only about 50% of the peak motor rating. Over most of the driving speed range, motor speed and torque control is by field weakening, utilizing a transistor chopper.

Input power to the motor comes from the main propulsion battery. Based on the presently available data, the preferred battery system is nickel-iron. However, a lead-acid battery system will be carried along in the development program as a backup until such time as an evaluation can be made, based on test data, of the performance of these two battery systems under operating conditions representative of the hybrid vehicle.

The central controller, incorporating a microprocessor, is the key to efficient operation of the hybrid system. Its inputs are the driver's input to the accelerator and brake pedals, together with

information on the current operating conditions of the major system components. It processes this information to determine how the system power demand should be split up between the heat engine and electric motor, and translates this data into command signals for the devices which control heat engine and electric motor. These control devices include the ignition on/off relay, throttle valve, and clutch actuation valve for the heat engine, and a field chopper and armature chopper for the electric motor. In addition, the central controller determines whether or not the transmission should be shifted to meet the system power demand most efficiently. While the vehicle is being recharged from the wall plug, the central controller may also be used to control the battery charger.

The input signals to the central controller include accelerator pedal position (x^+), brake pedal position (x^-), vehicle speed (N_2), torque converter input (or motor output) speed (N_1), battery voltage (V_B), battery current (I_B), battery temperature (T_B), and heat engine temperature (T_E). Other system variables which may be required by the central controller are motor armature current (I_A), heat engine manifold vacuum (P_M), and motor temperature (T_{MO}). All these are indicated as inputs in Figure 5-1 , although some may be determined to be unnecessary in the course of system development.

The power supply for the microprocessor and logic portions of the two choppers is an accessory battery which is a normal automotive 12 V battery whose charge is maintained by a DC/DC converter operating off the main battery pack. The accessory battery also supplies the ignition, lights, radio, and power accessories such as windows

and seats. Because the propulsion battery state-of-charge is always maintained above a minimum level, there is always power available to keep the accessory battery charged; consequently, the usual engine-driven alternator is deleted. For the same reasons, the electric drive motor is also always available to start the heat engine; consequently, the usual 12 V starter motor is also deleted.

The only mechanically driven accessories are the air conditioning compressor and power steering pump (not shown in Figure 5-1). The power steering pump also supplies the hydraulic assist unit for the brakes (Hydroboost), and hydraulic supply for clutch actuation. The compressor and pump are driven off the input to the transfer case (motor output).

5.2.2 System Controller

Basic Control Strategy

The final version of the control strategy developed for the NTHV incorporates two operating modes, like the strategy discussed in Section 4, Design Tradeoff Studies. It differs from the earlier strategy primarily in the use of a more sophisticated, μP controlled transmission shift strategy, incorporation of a warm up phase, and further optimization of the control parameters. The two operating modes are, of course, distinguished by whether or not a net withdrawal of stored energy is allows. On Mode 1, such a withdrawal is made; on Mode 2, it is not.

The specifics of what happens on these two modes, and how a combination of effective utilization of battery energy and highly efficient fuel utilization is obtained, are explained in detail in

Section 4.1.2 of Appendix C to this report. Briefly, the strategy is as follows:

Mode 1 (battery discharged less than the discharge limit, D_{BMAX}) - The heat engine is shut off unless at least one of three conditions is satisfied:

(a) Torque demand is above a value, T_{EOMIN}, which puts the heat engine close to its minimum bsfc.

(b) Power demand is above a value, P_{NOM}, which is chosen close enough to the motor's nominal rating to prevent excessive motor load and battery drain.

(c) Vehicle speed is above a value, V_{MAX}, which is chosen low enough to prevent sustained high battery discharge rates under highway cruise conditions.

When the heat engine is shut off, the electric drive subsystem meets the system power demand. If the engine is operating, it is operated as close to T_{EOMIN} as possible. Thus, if the torque corresponding to the system power demand is less than T_{EOMIN}, the engine meets the demand and the electric motor idles. If it exceeds T_{EOMIN} by an amount which is less than the available torque of the electric motor, then the heat engine operates at T_{EOMIN}, and the electric motor makes up the difference between T_{EOMIN} and the system demand. Finally, if the system torque demand exceeds T_{EOMIN} by an amount which is more than the available motor torque, the motor is operated at its maximum and the heat engine makes up the difference.

Mode 2 (battery discharged to or beyond the discharge limit) - The heat engine runs unless the system torque demand is below a threshold level T_{EOMIN2}, which is selected to provide reasonably low bsfc; however, it is considerably lower than T_{EOMIN}. Unless the torque demand exceeds the available engine torque, the motor either idles or operates as generator to reduce the discharge level to D_{BMAX} if the batteries have been discharged beyond D_{BMAX}. If the torque demand exceeds the available engine torque, the heat engine operates at its maximum and the motor makes up the difference.

A series of computer runs using the HYBRID2 computer program (updated and modified from the version used in the Design Tradeoff Studies, as described in Section 2.2.1 of Appendix C) was carried out to optimize these various control parameters. The set of values finally selected was

T_{EOMIN}	60 N-M
P_{NOM}	18 kw
V_{MAX}	72 kph
T_{EOMIN2}	20 N-M

The remaining control parameter, D_{BMAX}, does not have a clear-cut optimum value. Fuel economy improves as D_{BMAX} increases; however, the Design Tradeoff Studies showed that the decrease in battery life associated with operation to high depths of discharge outweighs, from a cost standpoint, the fuel economy gain. D_{BMAX} must also be chosen so that the battery has enough capacity left to allow the vehicle to meet the gradeability requirements (see Section 3.3.2 of this report),

when the initial state of charge corresponds to D_{BMAX}, as it would if the vehicle had been operating for a considerable distance. Based on these considerations, it was concluded that a value of D_{BMAX} in the .6 to .7 range would be suitable for nickel-iron batteries; we cannot get any more precise than this at this point because the variation in life with depth of discharge of nickel-iron batteries is not well defined at this time. For lead-acid batteries, a value of about 0.6 for D_{BMAX} appears to be suitable.

With nickel-iron batteries, the computer simulation results indicate an in-use fuel economy of 16.9 to 17.6 km/l (39.7 to 41.4 mpg), depending on the value of D_{BMAX} used within the .6 to .7 range. The corresponding values of wall plug energy consumption were in the .177 to .187 kw-hr/km range. These numbers must be hedged with various caveats, relating to uncertainties in battery characteristics, warmup requirements, relationships between real world usage and the driving cycles with respect to which the optimization was done, and so forth, some of which will now be discussed.

Control Strategy Modifications

Mode 1 operation, with its frequent startups and shutdowns, may be unsatisfactory for a cold engine under mild ambients, and will certainly be unsatisfactory in cold ambients where output is needed quickly from the heater and defroster. At a minimum, it can be assumed that the system would operate on Mode 2 until the engine temperature reaches a minimum value, since Mode 2 operation involves a fairly high average heat engine load and, hence, would provide rapid warmup. It is estimated that such additional Mode 2 operation for

warmup would result in a loss of about 2.5% in average fuel economy for every 2 km of average daily warmup distance driven on Mode 2.

In extremely cold ambients, particularly if the temperature of the propulsion battery has been allowed to drop excessively, using Mode 2 for warmup may be insufficient; and it may be necessary to operate the heat engine continually. The extent to which this may be necessary will have to be determined experimentally.

Backup Control Strategy

The factor which introduces the greatest uncertainty in whether or not the fuel economy estimates provided by the computer simulation can, in actuality, be achieved is control of emissions. Little is known of the emissions of an engine operated in the fashion defined by the basic control strategy; this is discussed further in Section 6. This being the case, it would be well in developing the hybrid propulsion system to have a backup control strategy available which involves fewer heat engine startups and shutdowns. Such a strategy would still shut the heat engine down during idle and braking periods; however, it would be running at all other times. Consequently, the transition speed V_{MAX} would no longer be used as a control parameter, and a new parameter T_{EOMN1} is required. This is the minimum torque output which is permitted for the heat engine. For system torque demands below T_{EOMN1}, the heat engine operates at T_{EOMN1}; and the excess torque developed is absorbed by the motor, which charges the batteries. This applies for both Mode 1 and Mode 2 operation. On Mode 1, if the demand is between T_{EOMN1} and T_{EOMIN}, then the motor idles and the heat engine meets the total demand. For demands above

T_{EOMIN} (or P_{NOM}), Mode 1 operation is identical to that described previously. Likewise, for demands above T_{EOMN1}, Mode 2 operation is identical to that described previously.

The effect of this strategy is to reduce the fuel economy and the wall plug energy consumption. For example, for $D_{BMAX} = .6$, the fuel economy with nickel-iron batteries was reduced by 32% from that attained with the basic control strategy (although it was still 51% better than the reference vehicle). The cause of this is not so much that the engine is operated less efficiently, but that the battery is depleted much less rapidly than with the basic strategy. Consequently, the battery discharge limit is not usually reached, and less extensive use is made of wall plug energy.

Implementation

To implement the basic control strategy, the system controller must be based on a microprocessor (μP) in order to perform all the required functions economically. The factors considered in selecting a μP around which to build the system controller include the following:

- Manufacturing technology
- Environmental considerations
- Execution speed
- Architecture
- Instruction set
- Addressing modes
- Microprocessor development system

A discussion of these factors will be found in Section 4.1.2 of Appendix C. Three primary candidates were isolated from the field of available microprocessors, based on an evaluation of these factors. They are:

1. Signetics 2650A
2. Motorola 6802
3. Zilog Z80

All of these are fabricated using N channel MOS technology. The implementation in software of the basic control strategy discussed previously, input and output interfaces, sensor requirements, control algorithms for the heat engine, motor and transmission, and other aspects of the system controller, are discussed in detail in Section 4.1.2 of Appendix C.

5.2.3 Heat Engine and Controls

The basic choice for the heat engine is the VW 1.5 l, four cylinder gasoline engine as used in the Rabbit. In 49-state form, this engine delivers 53.3 kw at 5800 RPM, with a peak torque of 99 N-M at 3500 RPM. It is a fuel-injected engine, and this offers the potential for fuel control during the engine startup and shutdown transients. However, availability of hardware to facilitate changes in engine calibration may dictate the use of an alternative engine whose fuel and electrical systems have been developed by a U. S. manufacturer and use components from U. S. suppliers. Such an alternative is the Omni/Horizon engine. This is a 1.7 l, longer stroke version of the VW engine which delivers 50 kw at 5200 RPM, with a peak torque of 110 N-M at 2800 RPM. It uses a Holley 2 barrel carburetor; ignition

system is by Essex or Prestolite. Dimensionally, the basic engine is externally identical to the Rabbit engine except for manifolding and the fuel distribution system. The potential difficulty with this engine is the inability to introduce control over fuel flow during startup and shutdown transients. Consequently, the choice between these two engines will be based on where the emissions problems are, and this will require Phase 2 testing to determine.

Because of the unknowns involving emissions characteristics, we are not in a position at this point in time to define precisely the engine fuel, spark, and emissions controls to be used on the NTHV engine. The alternatives for fuel control with the injected Rabbit engine include the following:

1) Unmodified (mechanical control of fuel metering from air flow sensor).
2) Same as (1) with separate solenoid valves at each injector to provide fuel shutoff during startup and shutdown transients.
3), 4) Same as (1) and (2), respectively, but with fuel metering controlled by a μP based on signals from an air flow sensor and/or exhaust oxygen sensor.

Alternatives for fuel control of the carbureted Omni/Horizon engine are similar to (1) and (3) above. Likewise, alternatives for control of spark advance and EGR rate for either engine may be based on the existing engine controls or may utilize the system μP.

Engine startup is accomplished by engaging a clutch between the engine and transfer case, as indicated in the system schematic (Fig. 5-1).

This is a normal plate and disc automotive clutch, actuated hydraulically. The rate at which the engine can be brought up to speed and power is a critical factor in the driveability of the vehicle. The engine must get up to speed and develop power fast enough to provide a reasonable approximation to the throttle response of a conventional vehicle. In order to understand the relative importance of various factors in this startup process, a parametric study was made using two simulation programs, VSYS and VSYS2, described in Appendix C. This study is described in detail in Section 4.1.3 of Appendix C. The principal conclusions which were drawn were the following:

- Engine inertia should be minimized. A practical lower limit to this inertia will be set by the inertia of the crank, con rods, pistons, etc., combined with the inertia of the clutch plate. Most of the engine flywheel, which is integral with the clutch plate, should be cut back to minimize the flywheel moment of inertia (normally an order of magnitude higher than that of the internal engine parts). Once the clutch is engaged, the engine will have plenty of flywheel since it is coupled to the motor and the torque converter pump. Another consideration involves the dynamic loads on the engine/motor coupling chain. In the final design stage, a careful dynamic analysis will have to be done to see how much flywheel has to be retained at the engine to avoid severe load excursions in this chain.
- With the engine inertia cut back to about 50% of nominal, it should be possible to achieve clutch engagement and engine

startup times on the order of .3-.4 sec. without exceeding the limiting motor torque (160 N-M for the Siemens motor). Under these conditions, the clutch should be sized to handle a dynamic load of about 150 N-M. Clutch engagement rate would be about 400 N-M/sec.

- It would be highly advantageous from a driveability standpoint to have the torque converter active when engine startup occurs, due to the much lower effect on the vehicle as compared to the case in which the torque converter is locked up. Thus, if the torque converter is locked up when engine startup is called for, it would be desirable to release the torque converter lockup clutch and then re-engage after the engine startup is complete. Whether all this action can be squeezed into a time span of something less than .5 sec. will have to be determined experimentally.

5.2.4 Motor and Motor Controls

Motor

The motor selected for the NTHV is the Siemens 1GV1 separately excited machine. It was originally designed for application in an electric version of the VW transporter, with a nominal 144 V battery pack. The design center of the motor is 130 V, at which voltage its nominal (1 hr) rating is 17 kw and its peak 33.5 kw. SCT has used this motor with great success in its electric conversion of the VW Rabbit. In that application, a nominal 108 V battery pack is used, and the peak motor power is limited to about 24 kw by current limiting. In the hybrid, the motor will be used with a nominal 120 V

battery pack; to achieve the maximum power of 27 kw required with the nickel-iron batteries, about the same current limit will be required as is used in the SCT Electric (300 A). An approximately 10% higher limit will be required with the lead-acid battery pack. These limits are consistent with the motor's maximum current rating of 320 A. Detail on the motor's performance characteristics will be found in Section 4.1.4 of Appendix C.

Armature Chopper

The chopper must supply an armature current of up to 140 A to accelerate the vehicle until the motor reaches base speed. With the Siemens motor, which has an armature inductance of approximately .8 MH, it is necessary to use a chopping frequency of approximately 10 KHZ to keep ripple down to an acceptable level without the use of an additional inductor.

Switching transistors capable of operating at 10 KHZ and 150 amps are not common; but in recent months, several manufacturers have introduced new transistors capable of very high current operation. Several of these are large enough to be used in a single transistor output configuration, which would eliminate the need for emitter balancing resistors or other balancing techniques which either waste power or force compromises in the design.

However, these transistors are still considered developmental devices; and their suitability for a particular application must be tested. The final chopper design and transistor selection will be determined only after testing the various devices in circuits such as those of Figures 5-2 and 5-3. Figure 5-2 shows the simplification

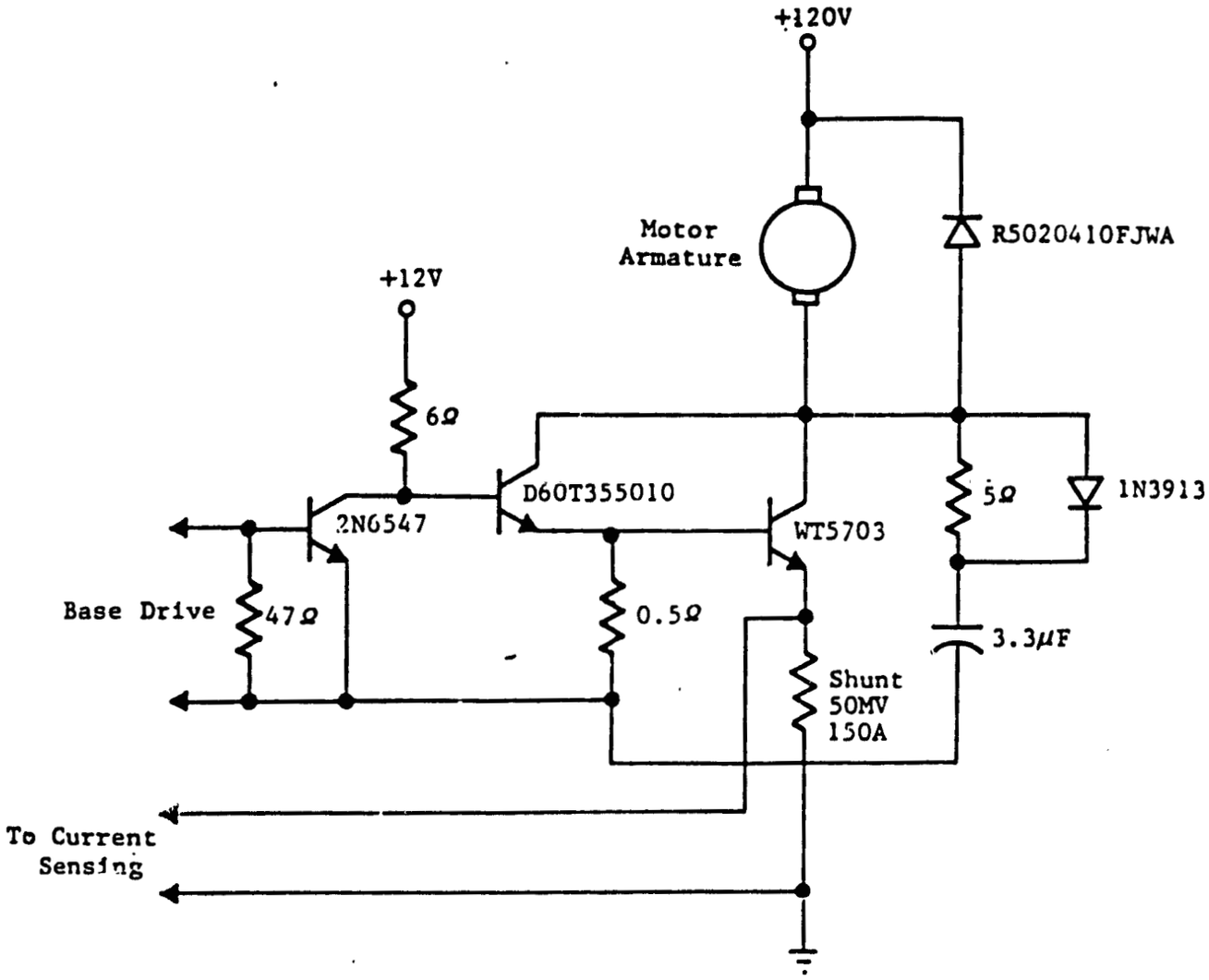

Figure 5-2. Single Transistor Armature Chopper Circuit (Shown with WT5703 Transistor)

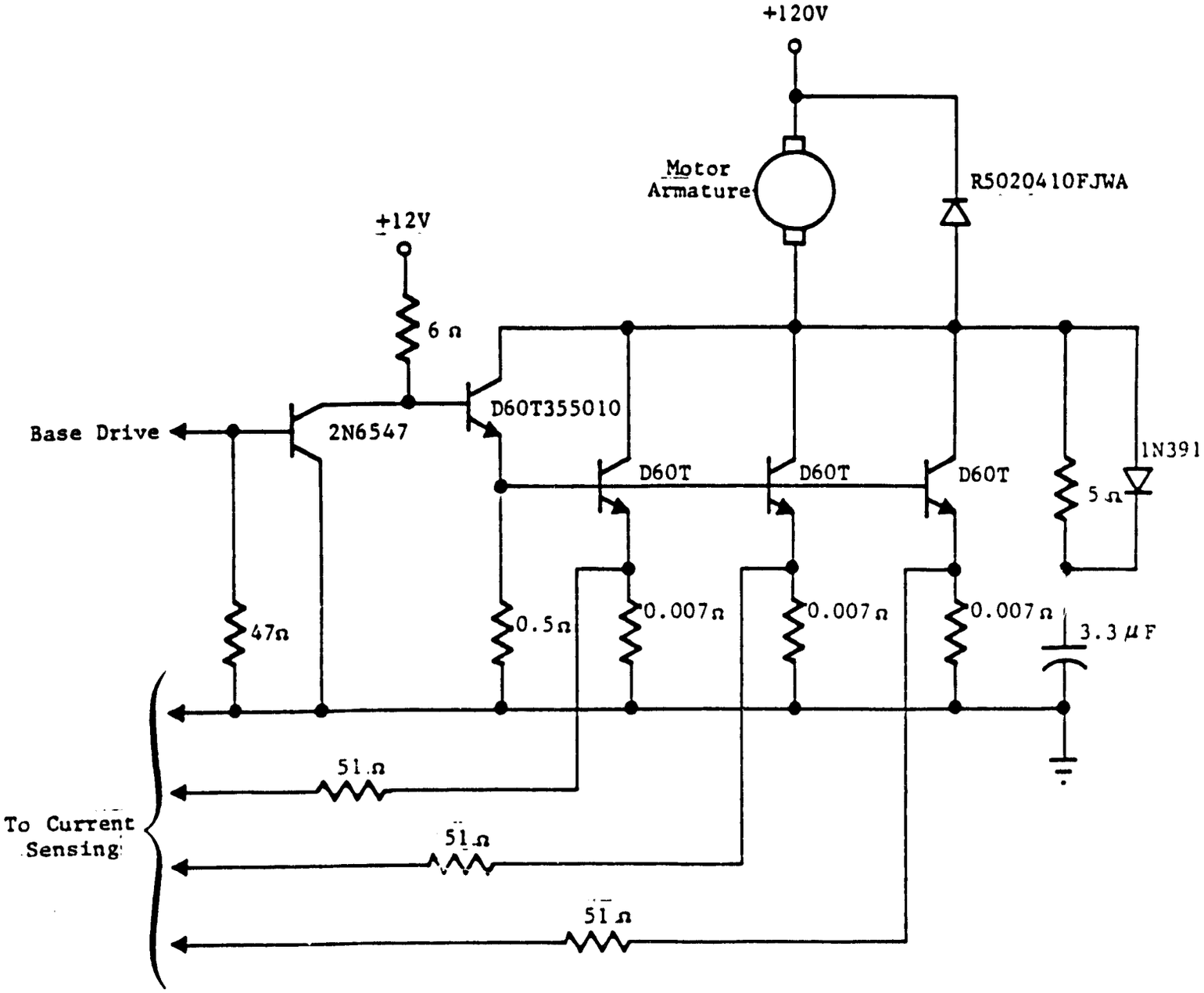

Figure 5-3. Multiple Transistor Armature Chopper Circuit
(Shown with D60T Transistors)

which occurs when only a single output transistor is required; Figure 5-3, on the other hand, shows a paralleled output stage, using a Darlington configuration.

Additional discussion of design aspects of the armature chopper will be found in Section 4.1.4 of Appendix C.

Field Chopper

The field chopper power section will be very similar to the one used on the Electric by SCT, and the basic design is illustrated in Figure 5-4. Pulse width modulation control signals will be generated by the microprocessor. The chopper frequency will be selected so that induced armature current ripple is minimized. Experience has shown that a frequency in the range of 25 to 100 Hz would accomplish this. This low a frequency is possible since the field inductance is high, on the order of 1.5 H. One transistor is used in the output stage, a Kertron U675, which is gain rated at 15 A with a 200-volt breakdown rating. The field winding resistance is on the order of 10 Ω ; so this single device is well suited for this application. SCT's present controller uses three 2N6259 transistors in parallel for this purpose because the U675 or a similar device was not available at the time of that controller's development.

5.2.5 Batteries and Battery Charger

Batteries

As an introduction to this section, it appears worthwhile to mention that all the design and development work on the near term, or improved state-of-the-art (ISOA), batteries has been carried out for cell and battery configurations tailored to pure electric vehicles.

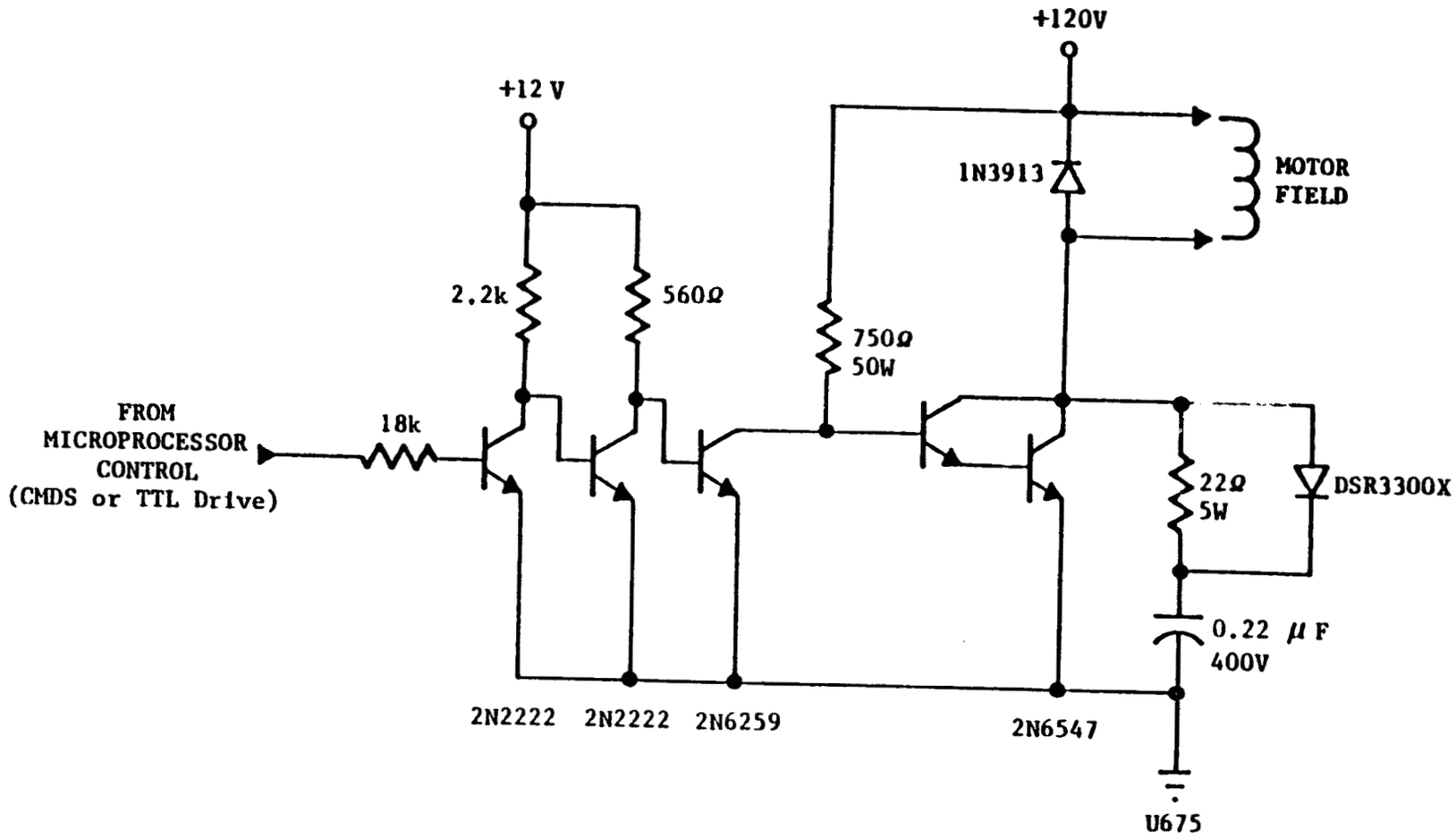

Figure 5-4. Field Driver

Nothing of substance (i.e., something built and tested) has been done relative to the hybrid application. Moreover, the different states of development of the three near term battery types are such that no hard conclusions can be drawn yet as to which would be best for the electric vehicle application in the mid-80's. If this were possible, then there would not be any reason for ANL to continue to pursue multiple lines of battery development. Consequently, it is very clear that there is no clean, demonstrably accurate method for selecting the 'best' battery for the hybrid application. The best that can be done is examine the status of the three battery systems relative to the ANL goals, together with their performance in the hybrid system, assuming these goals are attained, and make a judgment as to which system or systems to work with within the constraints of the NTHV program.

As discussed in the Design Tradeoff Studies section (Section 4) of this report, such an examination leads one to the conclusion that the nickel-iron system has the highest overall potential because of a good combination of relatively high specific energy and specific power and a low cost/life quotient, with lead-acid and nickel-zinc a fairly close second and a distant third, respectively. However, it must be recognized that the nickel-iron system has not had the same amount of development applied to it as the other systems; and, consequently, there are more unknown areas.

Consequently, we have selected as a preferred system a nickel-iron system designed by Eagle-Picher, with a lead-acid system by ESB as a backup.

1. Nickel-iron Battery. This battery pack is comprised of 102 cells of the same height (264 mm) and width (178 mm) as those being developed by Eagle-Picher for ANL on the Improved State-of-the-Art Battery Program. The cell thickness is reduced to 28 mm to get the required number of cells to provide a nominal 120 V battery at the relatively low weight of approximately 270-280 kg. The cells are arranged in three rows of 34 cells each, with the overall package fitting behind the vehicle's rear axle. Having all the cells in a single package like this simplifies the problems of thermal management and ventilation. Specific energy at the C/3 rate is projected to be about 54 w/kg.

The Eagle-Picher design utilizes the iron electrode technology developed by the Swedish National Development. This is a relatively low gassing electrode which obviates one of the historical disadvantages of the nickel-iron system and provides a relatively low maintenance battery. Batteries which would be provided initially in the Phase II program would require normal service, with the goal of providing a reliable, single point watering system eventually. Single point watering would, of course, be a necessity on a production vehicle.

2. Lead-acid Battery. The lead-acid battery is comprised of ten 12 V modules to be designed and developed by ESB. Module dimensions are 31.8 cm high x 17.9 cm wide x 27.4 cm long, and the total battery weight is estimated at 341 kg, or 71 kg more than the nickel-iron system. This module size does not correspond to the case size on any existing production battery, and new case tooling would be

required. Battery performance characteristics would be similar to the XPV-23 (EV 130), adjusted for size, weight, etc. The energy density is estimated at 36.1 w-hr/kg, which corresponds to a usable energy at the three hour rate of 12.3 kw-hr. As in the case of the nickel-iron system, normal maintenance would be required on test-and-development batteries; eventually, however a single point watering system would be required. With this module configuration, the lead-acid battery can be accommodated in essentially the same overall package as the nickel-iron battery.

Additional discussion of design aspects of both battery types will be found in Section 4.1.5 of Appendix C.

Battery Charger

A transistor switching, series inductor type charger was chosen over other alternatives (ferroresonant and SCR switching, series inductor) because of its reduced size and weight, made possible by the high switching frequencies of the transistor chopper and consequent small inductor size.

The following features were designed into the charger:

- 20/30 amp line select
- 115/230 volt operation
- Current cutback at gassing point
- Automatic shutdown at voltage
- Automatic startup
- Equalize mode (finish and 24-hour trickle)
- Blower air flow interlock
- Thermal shutdown for high heatsink temperature

Detail on the charger circuit design will be found in Section 4.1.5 of Appendix C to this report. Circuit efficiency is expected to be about 92% with 115 volt input, and 94% with 230 volt input. All components could be mounted in a box approximately 14 x 14 x 7 weighing approximately 15 pounds.

5.2.6 Transmission and Rear Axle

Transmission

The transmission for the NTHV is a four-speed overdrive automatic transmission with torque converter lockup on the top two gears. Originally, we were looking for lockup on the top three gears; however, deleting the second gear lockup had very little effect on fuel economy (about 1%), so it was dropped from the requirements. The specifications developed for transmission are shown in Table 5-2. Unfortunately, there is no production transmission which meets precisely the specifications needed for this transmission. The three production transmissions which come closest are the following:

- Chrysler A904 Torqueflite, as used on the 3.7 l Aspen/Volare model. This is a 3-speed transmission with lockup on third. The gear ratios are identical to those specified in Table 5-2, but it lacks the overdrive fourth gear.
- Ford F10D. This is a 4-speed overdrive transmission which will become available as an option on 1980 Ford products with 5 liter and 5.8 liter engines. It has full lockup in overdrive and a split torque path in direct third in which only 40% of the engine torque flows through the torque converter. The speed range and torque converter size of this transmission are unsuited to the hybrid.

TABLE 5-2

NTHV TRANSMISSION SPECIFICATIONS

Number of speeds:		4
Ratios:	1st	2.45
	2nd	1.45
	3rd	1.00
	4th	0.75
	Reverse	2+

Input Speed Range: 0-6000 RPM

Input Torque Range: 0-220 N-M

Lockup Provisions: 3rd and 4th gears, minimum

Stall Torque Ratio: 2.1

Normal Torque Converter Dia. 276 mm.

- Toyota A40D. This is a 4-speed overdrive with the right ratios, except for the overdrive 4th which is a little low (.69 vs. .75), and the right speed range (0-6000 RPM). Unfortunately, its torque converter lacks a lockup capability.

Unless Toyota introduces a lockup torque converter within the time frame of the Phase II program, the most practical approach is to use the Chrysler A904 three speed in conjunction with an electrically controlled overdrive. This would provide an acceptable simulation of the optimum transmission characteristics at reasonable cost, without turning the Phase II NTHV Program into a transmission development program.

A further discussion of the design modifications required for the transmission will be found in Section 5.2.6 of Appendix C.

Rear Axle

The rear axle needed for the hybrid is also non-standard. The standard LTD axle ratio is 2.26; the hybrid requires something on the order of 5.12. Consequently, a custom ring and pinion set will be needed.

5.3 Chassis Systems

Brakes

The major modifications required to the braking system of the current production LTD are the use of a hydraulic assist instead of vacuum assist at the master cylinder, and modifications to either the rear wheel cylinder size or the valve which governs front-to-rear brake effort proportioning to accommodate the larger rear weight bias

of the hybrid. It should be noted that the regenerative braking provided by the motor, which is applied at the rear wheels since the drive layout is rear wheel drive, automatically compensates to some extent for the rearward weight bias. Consequently, the change in hydraulic proportioning will be less than would be expected solely on the basis of the change in weight distribution. The hydraulic assist unit is the Hydroboost system by Bendix, which had been used on large Ford and Mercurys prior to downsizing, and is in current use on diesel powered GM products.

The weight increase of the hybrid over the present LTD is only about 156 kg, distributed -67 kg front and +222 kg rear. The relatively small increase, coupled with the presence of regenerative braking, makes physical increases in the size of the brakes unnecessary. The stock LTD front disc, rear drum system is retained with slightly higher line pressure, or larger diameter wheel cylinders for the rear brakes.

Suspension

The situation with the suspension is similar to the brakes. No modification is required to the front suspension, while at the rear, higher rate (by about 20%) springs and heavier duty shocks will suffice. Because of the low CG of the added battery mass in the rear and the high rear suspension roll center, it is not necessary to introduce a rear anti-roll bar.

Tires and Wheels

The hybrid requires tires and wheels with a load rating of at least 670 kg (1473 lbs) per wheel; this is the rear wheel loading at

the maximum payload of 520 kg. (Total mass at max payload is 2384 kg distributed 43.8% front, 56.2% rear.) The current standard tires on the LTD are Firestone 721 steel belted radials, size FR78-14. This tire has a maximum load rating of 1500 lbs at 32 psi inflation pressure, so it would be adequate for the job. An advanced version of this tire will be utilized to attain lower rolling resistance.

The current OEM Ford wheel is a 14" diameter, 5.5" wide steel wheel, weighing 19.0 lbs each. The wheel material is .1335 hot rolled low carbon steel. This will be replaced by a molded composite wheel weighing approximately 11 lbs. Currently there are three major suppliers developing composite wheels: Firestone, Owens Corning, and Motor Wheel Corporation. All three are reporting excellent results. These composite wheels provide a high payoff in terms of both overall weight reduction and reduction of unsprung mass, which is important from a ride and handling aspect. Further discussion will be found in Section 4.2.3 of Appendix C.

5.4 Body

The proposed SCT hybrid vehicle is predicated on the use of a high volume six-passenger vehicle as both the reference vehicle and as the actual hardware basis for the design and build of the hybrid.

The Ford LTD was selected as being representative of a weight efficient down-sized full-size car. This car will undergo some design changes and resultant weight reductions between now and the 1981-2 model year when the NTHV deliverable prototypes would be built. The hybrid vehicle requires certain modifications being made

to package the new propulsion system and its associated batteries, controller, and charger. In addition, it incorporates other limited, cost effective changes to reduce aerodynamic drag and to reduce vehicle weight to be more representative of the anticipated weight of the 1985 model year reference vehicle.

The body components that will be changed from the production LTD are in four groups. These are: 1) The vehicle front end which consists of the bumper system, hood, and fenders; 2) rear end changes consisting of the decklid and rear bumper system; 3) other surface panel changes to reduce weight such as door outer panels; and 4) changes related to packaging batteries and propulsion system components.

An analysis of material properties has been conducted by SCT and Sheller-Globe, who will be responsible in Phase II for the body detailed design, prototype tooling, and prototype parts. Material selections were based on an analysis of structural and other special vehicle requirements, and represent the direction most likely to be followed by the major U. S. auto manufacturers for the 1985 model year.

Structurally, all materials selected provide components that are the functional equivalent of their current steel counterparts. As shown in Table 5-3, extensive use will be made of plastic components for exterior surface parts of the car. The one exception is the hood, in which an aluminum outer panel would be used to preclude problems that may be encountered with a plastic hood exposed to high engine compartment temperatures. Modifications to the floor,

Table 5-3 MATERIAL SUBSTITUTION HYBRID PROGRAM

PART	EXISTING MATERIAL	EXISTING WEIGHT	GA THKNSS	SUBSTITUTION MATERIAL	WEIGHT PROJECTION	GA THKNSS	POTENTIAL WT. REDUCTION	COMMENTS
FRONT BUMPER	STEEL	70.5 ASSY.	.103	POLYPROPALENE OR URETHANE	40.5 ASSY.	-	30.0	ENTIRE SOF OR SKIN ONI
HOOD	STEEL	54 ASSY.	.028	ALU. OR HSLA	46. ASSY.		8.0	OUTER SKIN ONLY
FRONT FENDER L.H. OUTER SKIN	STEEL	18.5	.035	RIM URETHANE	9.25	0	9.25	OUTER SKIN ONLY
FRONT FENDER R.H. OUTER SKIN	STEEL	18.5	.035	RIM URETHANE	9.25	-	9.25	OUTER SKIN ONLY
REAR WHEEL HOUSE INNER OUTER R & L	STEEL	50.0	.028	POLYPROPALENE	5 EA R & L	-	20	NON STRUCT
REAR DECK INNER & OUTER	STEEL	43.0	.035/.028	RIM URETHANE	21.0	-	28.0	INNER & OU FORMED TOG
REAR BUMPER	STEEL	64.750 ASSY	.103	POLYPROPALENE	34.750 ASSY	-	30.0	ENTIRE SOF REAR OR SK ONLY
FRONT DOOR R & L	STEEL	12.5 EACH	.030	RIM URETHANE	7.5/SKIN	-	10 PER PAIR	OUTER SKIN ONLY
REAR DOOR R & L	STEEL	8.0 EACH	.030	RIM URETHANE	5.0/SKIN	-	6 PER PAIR	OUTER SKIN ONLY

Table 5-3. MATERIAL SUBSTITUTION HYBRID PROGRAM

PART	EXISTING MATERIAL	EXISTING WEIGHT	GA THKNSS	SUBSTITUTION MATERIAL	WEIGHT PROJECTION	GA THKNSS	POTENTIAL WT. REDUCTION	COMMENTS
HEELS	STEEL	19.0	10 GA.	PLASTIC	9.0	-	40 lbs/VEH.	MOLDED STRUC. PLASTIC
RONT SEAT RAME	STEEL FRAME	83.5 ASSY.	MISC.	MOLDED PLAS.	53.5	-	30 lbs	STRUCTURAL PLASTIC
EAR SEAT RAME	STEEL FRAME	33.0 ASST	MISC.	MOLDED PLAS.	23.0	-	10 lbs	STRUCTURAL PLASTIC
OOR TRIM PNLS RONT	UPHOLS. & TRIM	5.25 EA	-	MOLDED PLAS.	7.5/PAIR	-	3 lbs/PAIR	NONSTRUCTURAL PLASTIC
EAR	UPHOLS. & TRIM	3.50 EA	-	MOLDED PLAS.	5.0/PAIR	-	2 lbs/PAIR	NONSTRUCTURAL PLASTIC
UEL TANK LINES	STEEL	25.750	14 GA.	BLOW MOLDED PLASTIC	12.75		13 lbs	
UBTOTAL DESIGN CONTROLLABLE BY SCT.							248.50	
THER ANTICIPATED WEIGHT SAVINGS (FORD DESIGN CHANGES) INCLUDES HARDWARE SUCH AS DOOR HINGES (4) AXLE HOUSING (10) FRAME AND SUSPENSION (30) WINDOW CHANNELS (7.5)							51.50	
OTAL GHT REDUCTION PROJECTED							300.0	

engine, and motor mounts will use high strength steel to the maximum extent possible.

A summary of the new components, together with the materials and weights, is given in Table 5-3. Further discussion of design aspects will be found in Section 4.3.1 of Appendix C.

5.5 Vehicle System Characteristics

This section summarizes the key NTHV characteristics with respect to performance, fuel and energy consumption, and costs. For additional detail, see Section 4.4 of Appendix C.

Acceleration, Gradeability, and Maximum Speed

The acceleration characteristics projected for the NTHV are shown in Figure 5-5. These data are given for fully charged, nickel-iron batteries; they are also representative of acceleration performance with lead-acid batteries. They are computed for a test payload of 140 kg and without air conditioning operating. The acceleration times can be expected to be on the order of 4% longer when operating on Mode 2 with the batteries at a discharge limit in the .6-.7 range. An acceleration curve for the reference vehicle is shown for the purposes of comparison. The acceleration specifications of 0-50 kph in 6 sec., 0-90 kph in 15 sec., and 40-90 kph in 12 sec. are all met.

Maximum gradeability at near zero speed is in excess of 50% and well in excess of the required 30%. Gradeability over extended distances is summarized in Table 5-4; again, there appears to be no problem meeting these specifications when a battery discharge limit of .6 to .7 is used, for nickel-iron batteries. With lead-acid batteries, a discharge limit not in excess of .6 would be used.

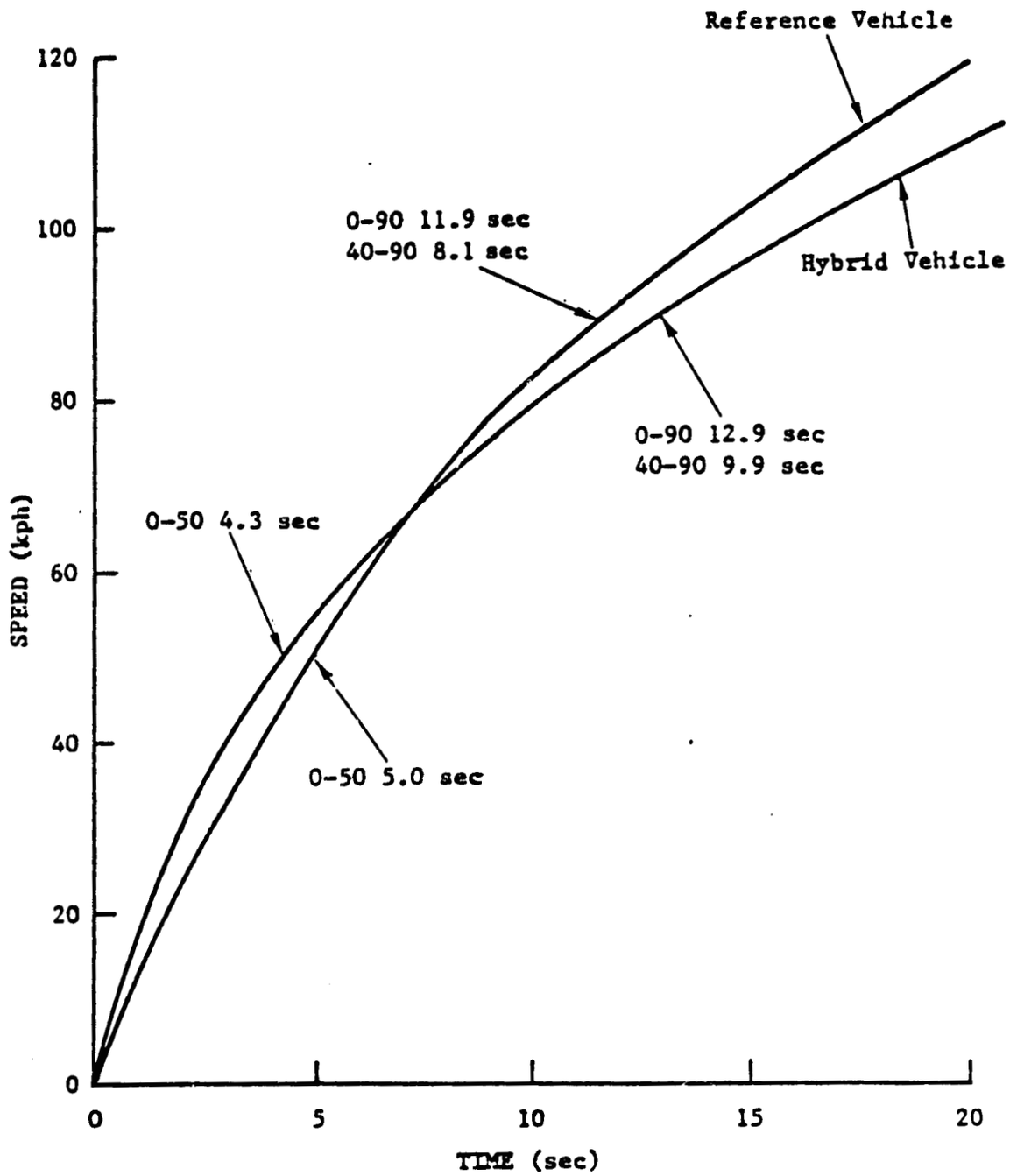

Figure 5-5. Acceleration Characteristics

Table 5-4. Gradeability of Hybrid Vehicle with Nickel-Iron Batteries

Grade	Speed	Specification	Distance Projected (km)* Nickel-Iron	Lead-Acid
3	90	Indef.	Indef.	Indef.
5	90	20	148	99
8	85	5	7.5	6.9
8	65	Indef.	Indef.	Indef.
15	50	2	3	2.6

* Assumes battery discharge limit is such that an additional 20% depletion is feasible (i.e., discharge limit is in the 60-70% range) for nickel-iron batteries, 30% for lead-acid batteries.

The vehicle top speed is estimated to be about 165 kph (103 mph) with fully charged batteries, and the repetitive high speed pass maneuver described in Section 2.9.2 of Appendix A can be accomplished without discharging the batteries too far. In fact, the energy removed during one high speed pass maneuver can be fully replaced before the next maneuver starts.

Fuel and Energy Consumption

The average annual fuel economy of the NTHV is projected at 16.9 to 17.6 km/l with nickel-iron batteries, for battery discharge limits in the .6 to .7 range. The corresponding wall plug energy consumption ranges from .177 to .187 kw-hr/km. Fuel consumption, battery output energy, and Mode 1 operating range for the three component driving cycles are summarized in Table 5-5. Wall plug output energy can be assumed to be battery output energy divided by .54.

Table 5-5. Fuel and Energy Consumption on Component Driving Cycles

	SAE J227a(B)	FUDC	FHDC
Mode 1:			
Fuel Consumption (l/km)	.0029	.0336	.0637
Battery Energy Consumption (kw-hr/km)	.2876	.1616	.0427
Range to .7 DOD (km)	29.6	50.3	204.8
Mode 2:			
Fuel Consumption (l/km)	.1067 (.1883)	.0881 (.1350)	.0764 (.0862)

Reference vehicle values are given in parenthesis. These numbers are representative of what the vehicle would be expected to do on a dynamometer test.

Costs

1. Manufacturing Costs. The estimated manufacturing costs for the NTHV are summarized below:

	Costs (over)/under Reference Vehicle
Four cylinder engine vs. V-8	$ 250
Parallel system hardware costs	(146)
Added clutch hsng. & clutch pkg.	(32)
Axle ratio-low volume	(5)
Suspension & tire upgrading	(9)
Frame & motor mounting provisions	(12)
Battery packaging & cooling	(60)
Engine exhaust & emission control	150
Engine cooling system	(20)
Motor cooling system (blower motor)	(14)
Accessory drive	(15)
Hydroboost brakes	(13)
Motor	(800)
Controller/charger, actuators, & mounts	(311)
Batteries and cables (nickel-iron batteries)	(1200)
Instrumentation	(120)
TOTAL HYBRID (OVER) REFERENCE $	(2357)

It should be noted that these costs do not assume any penalty associated with the planned material substitution as the same or equivalent costs would be incurred by the manufacturer of the reference vehicle in order to achieve weight reductions. In comparison to the costs included in our Design Tradeoff Studies Report (Appendix B), these manufacturing costs have increased by $557, with the major factor being the decision to include nickel-iron batteries in our base cost.

Use of lead-acid batteries at their estimated cost for the ISOA batteries would reduce this initial cost penalty for the hybrid vehicle by $250. Cost information on <u>any</u> battery system cannot be regarded as particularly firm at this point in time due to unknowns concerning the relationship between future production batteries and current developmental cells and batteries. The situation is further complicated in the lead-acid case by the recent volatility of the price of lead. Eagle-Picher recently performed a cost and design study for ANL in which the cost of batteries in quantities of 100,000 year was estimated at $79 kw-hr. ESB's most current estimate for production cost for lead-acid batteries for the hybrid is $75/kw-hr. This yields OEM prices of $1152 for the nickel-iron battery and $900 for the lead-acid battery, the values used in this comparison of the hybrid and reference vehicles.

Other cost increases relative to those projected in the Design Tradeoff Studies include a better definition of propulsion system mounts, battery charger, controller mounts, hydroboost brakes, and the cost penalty for a unique, and therefore low volume, rear axle ratio.

2. <u>Retail Price</u>. If one were to assume that the entire cost of the hybrid system must be recovered in the vehicle's retail price, the price would increase by $2950 to $4714, depending on whether one assumes a minimum markup cost passthrough or a maximum 2 x manufacturing cost formula. This price range is based on nickel-iron batteries and would be reduced by $315 to $500 if lead-acid batteries were used.

The current turmoil in auto industry sales would support the likelihood that the industry would be conservative in the delta price for hybrids in order to move buyers into purchasing new full-sized cars. In addition to taking a reasonable approach to pricing the hybrid, it would be likely that the issue of battery pricing would be studied and addressed by the auto industry. In our cost structure, the nickel-iron batteries account for over half the total increase in manufacturing cost over the reference vehicle. This not only accounts for a major new car pricing problem, but also could present a maintenance cost shock to the owner of a hybrid when he must pay to replace a complete set of batteries at a retail price level.

A solution to both problems would be to sell the car less batteries and lease the batteries to the car owner. This would spread the costs out more evenly over the life of the car and would provide the car owner with expert service support and the manufacturer with a supply of batteries for recycling, thus reducing battery costs. This issue should be addressed in Phase II.

3. Life Cycle Costs. A final update of the estimated life cycle costs for reference and hybrid vehicles is summarized below, for both the nominal fuel and electricity prices projected by JPL and for variations from these values.

	Reference Vehicle	Hybrid 'Passthrough' Pricing	Hybrid 2 x Manufacturing Cost Pricing
Nominal	9.4	10.6	11.9
Fuel + 30%	10.3	10.9	12.2
Fuel - 30%	8.6	10.2	11.5
Electricity + 30%	9.4	10.8	12.1
Electricity - 10%	9.4	10.5	11.8

Handling

An analysis was conducted of both steady-state and transient steer response for the hybrid vehicle. These analyses were also conducted for the current LTD to provide a basis of comparison. The results were as follows:

The LTD, as expected, understeered throughout the operating speed range, with the understeer getting stronger at high speed. The hybrid showed slight oversteer up to about 58 kph (36 mph) and then became understeering. The small amount of oversteer, coupled with the fact that the fully loaded (worst case) weight distribution does not put more than 56% of the weight on the rear wheels, led us to the conclusion that acceptable steady-state characteristics can be achieved by proper tire selection, suspension tuning, and, if necessary, use of higher rear tire pressures. In transient response simulations, the hybrid showed slightly increased response time and higher damping than the LTD. Both steady-state and transient response were well within the specifications published by DOT for the intermediate ESV.

Crashworthiness

After constructing a computer model of the existing LTD which gave a realistic crush value of about .5 m in a 48 kph barrier impact, the same model, with appropriate adjustments to the component masses and addition of the batteries and support structure, was run for the hybrid. The results indicated an increase in front end crush of only .013 m (.5 inc). In short, there should be no problem in meeting barrier crash requirements of 48 kph, and even somewhat beyond with the hybrid. The key factors here were the modest weight increase of the hybrid over the current LTD (only 156 kg with the nickel-iron battery pack), combined with the retention of the present LTD steel frame for the hybrid. This frame provides on the order of 90% of the total energy absorption in a barrier crash.

Weight Breakdown

An estimate of the NTHV weight was prepared based on a careful analysis of the changes to the Ford LTD. Accurate weights on key components were obtained by actually weighing components such as the heat engines and electric motor. Other weights were obtained by analysis and prior design experience (charger, controller, microprocessor). Battery weights were provided by their developers. The breakdown is shown in Table 5-6.

Table 5-6. ESTIMATED WEIGHT SUMMARY

Current LTD Weights

Item	Mass (kg)
Fuel storage	74.0
Coolant system	18.2
Exhaust system	21.2
Engine	220.0
Transmission	84.6
Drive shaft	10.0
Rear axle	52.6
Suspension (4)	75.8
Brakes (4)	61.8
Brake hydraulics	15.1
Steering system	28.8
Catalytic converter	12.7
Emission control	16.7
Tires and wheels (4)	98.0
Tire & wheel (spare)	17.6
Air conditioner	36.3
Battery	11.8
Body	789.0
Seats (2)	64.0
TOTAL VEHICLE	1708.0

Items Retained from LTD	Mass (kg)
Transmission	84.6
Drive shaft	10.0
Brakes (4)	61.8
Brake hydraulics	15.1
Steering system	28.8
Air conditioner	36.3
Battery	11.8
	248.4
Item Replaced or Added	
Transfer case	29.5
Batteries	270.0
Motor controls	30.0
Charger	9.07
Microprocessor	2.3
Engine	118.5
Coolant system	9.18
Tire & wheel (spare)	18.5
Exhaust system	18.8
Rear axle	48.1
Suspension (4)	67.8
Seats (2)	45.9
Body	737.6
Motor	87.0
Fuel storage	38.3
Tires & wheels (4)	84.8
TOTAL VEHICLE	1864.0

6. DEVELOPMENT REQUIREMENTS OF THE NEAR TERM HYBRID VEHICLE

6.1 Major Areas of Technology Development

The aspect of the SCT Near Term Hybrid Vehicle which makes it fundamentally different from either a conventional electric vehicle or a conventional I.C.E. vehicle is the systems control strategy, the manner in which the load is shared between the heat engine and the electric motor. This involves on-off operation of the heat engine, with the heat engine being loaded as soon as it is up to speed and firing. As discussed previously, this type of operation has the potential of achieving far lower fuel consumption than running the heat engine continuously. There are two major development areas associated with this approach. The first involves the development of the system control system to the point at which the vehicle's driveability is not inferior to a conventional car's. This is a large task, but one which we are confident is possible with the exertion of enough engineering pressure. The second area involves meeting emission standards. This is a gray area in which there is not even enough data to predict the magnitude of the task. There is simply no data on the emission characteristics of engines operating in this mode, and one of the first tasks in a development program must be to generate enough data so that the magnitude of the task can be assessed.

Another subsystem which will require substantial development is the propulsion battery. The requirements for a hybrid vehicle battery are different than those for an electric vehicle battery; and, consequently, unique cell and module designs will be required.

Also, additional characterization and test data will be required before a final assessment can be made of the relative merits of nickel-iron and lead-acid batteries for the hybrid application.

6.2 Controls

System Controller

The system controls development task will not involve the development of new hardware at the component level. It will involve the integration of available hardware, including microprocessor, into a system which inplements a fuel efficient control strategy in a vehicle of acceptable driveability. Specifically, it will include the following:

1) Continued development of the control strategy on a computer simulation, incorporating updated information on the heat engine, batteries, and so forth, as this data becomes available.
2) Dynamometer testing of the heat engine and motor combination, with vehicle inertia being simulated, to evaluate the dynamics of the engine startup/shutdown transients as a function of equivalent vehicle inertia, clutch engagement rate, engine throttle setting, engine temperature, initial system operating point, and so forth.
3) Re-evaluation of the microprocessor requirements, selection of a microprocessor, and design, breadboarding, and checkout with the μP development system of the system controller.

4) Incorporation of the system controller on the dyno test rig; development testing to adjust control parameters, and evaluate startup dynamics with controller operational.

5) Incorporation of the complete system in test bed vehicles; development testing to modify and fine tune the control parameters to obtain acceptable driveability and performance. The dyno test rig would be retained throughout the vehicle testing and development program to provide a means for doing preliminary checkout and evaluation of system changes under more controlled conditions than is possible in a vehicle.

The in-vehicle phase will occupy the largest part of the system controls development program. It will tie in to the emissions control development program in that, as soon as the control system is developed to a point where the vehicle is operating satisfactorily, a vehicle will be tested on a chassis dyno for emissions in both operating modes.

Motor Controls

The development requirements of the motor field controller are minimal. The power circuitry and components will be similar to those in use in the controller for the SCT electric vehicle, with the logic circuits modified to interface with the hybrid's system controller. The armature controller, however, is new; and a certain amount of development will be required. The major problem here is that the power transistor field is changing rapidly, and the new high power transistors which are becoming available are in many cases not completely characterized. Thus, if a selection is made of a basic power

transistor and a controller is designed and breadboarded around it, a substantial amount of bench testing will be required to ascertain what the real limits of the device are in this particular application. As a consequence, a few iterations of device selection and circuit design can be anticipated.

Engine Controls

This area is discussed in the next section, largely in the context of emission controls. It is appropriate at this point, however, to discuss the development requirements of the engine clutching arrangement. A preliminary selection of a clutch has been made, and this would be used on the dyno test rig discussed earlier. The tests on this rig will provide an opportunity to evaluate the clutch capacity, stability of engagement characteristics, whether any temperature problems exist with frequent engagement and disengagement, drag when disengaged, and so forth. Based on these tests, a second iteration of clutch selection and/or design modifications is anticipated.

6.3 Heat Engine

Emissions

Attempting to project the emissions of the hybrid vehicle based on available steady-state emission maps would be an exercise in futility, simply because the data is not relevant to the problem, and the magnitude of the emissions problem with the hybrid vehicle is unknown and will not be known until test data is obtained to characterize emissions in on-off operation. The only thing we can offer right now is our suspicions as to where problems may occur. These are:

- Higher raw (engine-out) HC and CO emissions as a result of startup transients.
- Higher raw NOx emissions as a result of operation at higher average engine loading.
- Greater difficulty in control of HC and CO emissions (also NOx since a 3-way catalyst will undoubtedly be standard for 1985 production) as a result of a lower average catalyst temperature.

The emissions problem is one that must be faced squarely and an understanding must be gained early in the development program of the magnitude of the problem. The steps in doing this are as follows:

- Obtain steady-state specific emissions maps of the engine.
- Define typical engine on and off times for Mode 1 and Mode 2 operation on the basis of computer simulation results.
- Operate the engine at various fixed throttle settings, with the dynamometer running at constant speed but clutching and de-clutching and starting and stopping the engine at the proper times, and measure emissions under these conditions. This will require the equivalent of either bag-sampling or continuous sampling which are procedures not normally used in conjunction with engine dynamometer testing.
- From this data, specific emissions maps for on-off operation can be obtained. These maps would have to be obtained for on and off times representative of both Mode 1 and Mode 2 operation.

Comparison of the steady-state and on-off emissions maps will provide a method of gauging the magnitude of the emissions control problem.

At this point, a judgment will have to be made as to whether or not the problem is workable without the necessity of a radical overhaul of the overall system control strategy.

Assuming that the conclusion is positive, then the next tasks would be as follows:

- Identification of operating regimes in which emissions are high.
- Re-calibration of engine parameters to reduce emissions in these areas. In addition to the engine parameters (mixture ratio, spark timing, EGR rate, etc.), it may be necessary to adjust other parameters associated with the engine start-up process. These include the point at which fuel is turned on, the rate of clutch engagement, throttle opening when fuel is turned on, and so forth.
- Running of emission tests on a chassis dynamometer to ascertain compliance with the relevant emission standards. In the event that compliance is not obtained, a modal analysis would be performed to determine what portions of the driving cycle are giving a problem, and what are the possible means for correcting it.
- Modifying engine and control parameters to reduce emissions on the problem parts of the cycle, rerunning chassis dynamometer and engine dynamometer tests as required.

Not to be overlooked is the possibility that an examination of the engine emissions in on-off operation will lead to the conclusion that the present system control strategy, with its frequent engine starts and stops, is unworkable from an emission control standpoint. In this case, it would be wise to have a backup control strategy available for which the probability of being able to meet emission standards is higher. Such a strategy, along with its implications regarding fuel and energy consumption, is discussed in Section 5.2.2 of this report.

6.4 Batteries

The fundamental problem faced by the vehicle and propulsion system designer is the non-existence of the data which would be required to make an incontrovertible, rational decision as to the best type of batteries to use in a 1985 production hybrid vehicle. The safe choice, of course, is lead-acid; improved production batteries approaching the ISOA performance goals will clearly be available in this time frame. In terms of cost, this battery may be in some trouble, however, if lead prices continue to behave as they have recently. The nickel-iron system, as discussed previously, has a number of potential advantages, particularly in terms of lower life cycle cost. There are a large number of unknowns associated with it, however, since the ANL program on this battery system has been a lot 'lighter' than those for the lead-acid and nickel-zinc systems. Whether it can achieve production status by 1985 is, of course, dependent on resolution of some of the unknowns and the subsequent

level of development effort. The nickel-zinc system, on the other hand, still does not appear to us to have a potential cost/life quotient which is low enough to make it competitive in the hybrid application. In addition, other problems appear to be cropping up which would severely hamper it in the hybrid application, like the presence of a 'pseudo-memory' effect.

In light of this situation, it appears to us that the most reasonable (if not demonstrably correct) approach is to pursue development of both nickel-iron and lead-acid designs for the hybrid application to a point at which some of the unknowns, particularly with regard to the nickel-iron system, can be resolved to the extent that a more rational selection can be made. The activities which would be pursued in the initial phase of such a program would be the following:

- Design and fabrication of cells of a size appropriate for the 120 V hybrid system.
- Cell testing to characterize system performance over the complete range of specific power demands to be made on the battery.
- Design and fabrication of the battery system. This will involve tooling design and procurement in the lead-acid case, and possibly also in the nickel-iron case, with a lead time of about six months.
- Preliminary battery testing to verify performance at nominal conditions.

- Bench testing of the battery systems to characterize battery performance under both constant discharge rate conditions and load profiles representative of operation in the hybrid vehicle.

7. CONCLUSIONS AND RECOMMENDATIONS

The major conclusions drawn from Phase I of the Near Term Hybrid Vehicle Program may be summarized as follows:

Mission

The mission which offers the greatest potential for reduction in fuel consumption through the replacement of conventional vehicles by hybrids is that of a general purpose, six-passenger sedan, equivalent in payload and passenger accommodations to a Ford LTD or Chevrolet Impala (EPA 'large' classification, by volume). As compared to the class of smaller vehicles which still satisfy the minimum program requirement of accommodating five adults, the full-sized six-passenger sedan is favored by the following factors:

1. Total fuel consumption projected for 1985 for this segment of the fleet is at least as great as that of the smaller vehicle class.
2. This market class has a lower sensitivity of volume to price; i.e., the retail price increment of a hybrid vehicle is more likely to be acceptable to buyers of this class of vehicle than to the smaller car buyers.
3. This market class has a higher overall profitability than the smaller vehicle class; hence, the manufacturer is more likely to pass on the additional manufacturing cost of a hybrid at a minimum, passthrough level, particularly in view of the next item.

4. The incentive of the manufacturer to maximize hybrid sales in this market class is quite high because this is the class with the highest profitability but the most problems in terms of fuel economy. The manufacturer can make a bigger improvement in his CAFE by replacing vehicles in this class with fuel efficient hybrids than by replacing smaller vehicles which already get reasonable fuel economy.
5. From a technical standpoint, the larger vehicle requires less re-engineering and modification to make it suitable for hybrid propulsion than the smaller one. This tends to minimize the manufacturing cost and, hence, retail price increment and thereby maximize the potential market penetration.

Propulsion System

The mode of operation which offers the greatest potential fuel savings involves running the heat engine only when it is needed. This requires it to be started and brought up to full power almost instantaneously in order to meet the driver's power demands. This type of operation appears to be feasible, although extensive development will be required to attain adequate driveability; and there are unknowns regarding emissions. This type of heat engine operation must be combined with a bi-modal control strategy which allows the battery to reach a depth of discharge of about 60% on most days of operation. This allows a substantial fraction of the energy required to run the vehicle to come from the wall plug instead of onboard fuel.

It is not possible to simultaneously maximize fuel economy and achieve a life cycle cost which is comparable to that of a conventional vehicle performing the same mission. Maximum fuel economy occurs for a configuration which is too close to a pure electric vehicle to be both cost effective and meet the performance requirements of the hybrid. It is, however, possible to achieve fuel economy on the order of twice that of a conventional vehicle with a comparable life cycle cost.

To actually achieve a life cycle cost which is not significantly higher than that of a conventional vehicle, the fuel savings of the hybrid must be accumulated over a long vehicle life (at least 10 years, at the nominal annual mileage projections made by JPL), and at fuel costs which are at the upper limit of the sensitivity boundaries (30% above nominal projections). In addition, the manufacturing cost increment over a conventional vehicle and the replacement battery OEM cost would have to be passed on to the consumer at a level which is considerably less than the factor of 2 specified by JPL.

As in the case of an electric vehicle, the two most significant factors in keeping the life cycle cost down to a reasonable value are the retail price (hence, manufacturing cost) increment and the ratio of battery replacement cost to battery life. In the hybrid vehicle, both these factors can be reduced by reducing the power rating of the electric drive portion of the system relative to the system power requirements. Even when a bias in favor of better fuel economy is applied (at some sacrifice in life cycle cost), we come to the conclusion

that the peak rating of the electric drive portion of the system should be no more than 35% of the system requirement for lead-acid batteries, and less for nickel-iron and nickel-zinc types. Moreover, the peak power rating of the electric motor should correspond to working the battery near the upper limits of its peak power capacity. High energy density appears to be somewhat less important for the hybrid than for a pure electric vehicle, and the economic tradeoff appears to favor higher voltages (around 120 V) even if these entail some loss in energy density. This, in turn, requires smaller cell sizes than are under development for the ANL ISOA (improved state-of-the-art) battery program, since the hybrid battery pack is smaller, and implies a unique battery design for the hybrid.

The type of battery which appears to be most suitable for the hybrid, from the point of view of minimizing life cycle costs, is nickel-iron, with lead-acid a reasonably close second. Although nickel-zinc is highly desirable because of its high power and energy density, its short life and high cost puts it well behind the other two from the standpoint of economics. The development of nickel-iron batteries is, however, considerably behind lead-acid batteries; and there are some unknowns associated with it. Consequently, both battery types should be included in a hardware development program.

The characteristics of the hybrid propulsion system, with respect to the effects of various parameters on its fuel and energy efficiency, give rise to a conclusion which appears rather startling on first glance but inevitable upon further reflection. That is, the hybrid is much less sensitive than a conventional vehicle is, in

terms of the reduction in total fuel consumption and resultant decreases in operating expense, to reductions in vehicle weight, tire rolling resistance, etc. and also to propulsion system and drivetrain improvements which are designed to improve the bsfc of the engine under low road load conditions (for example, use of diesel or stratified charge engines, continuously variable transmissions, etc.). Consequently, once the step to the incorporation of a hybrid system is made, this implies that the most appropriate policy toward additional radical modifications should be one of conservatism and justification on economic grounds.

Vehicle Considerations

The vehicle packaging studies indicate that the packaging of a hybrid propulsion system in a vehicle such as the Ford LTD can be done with a minimum of sacrifice of luggage capacity. This situation is quite unlike that of a high performance pure electric vehicle which uses near term technology, and supports our belief that a hybrid vehicle, if produced by a major manufacturer, would come into being as a modification or option on an existing line of conventional vehicles, not as a unique car line.

Design Philosophy

Based on the considerations discussed above, together with the requirement for producibility by the 1985 time frame, we came to the conclusion that the design of a near term hybrid vehicle should be predicated on the following:

a) The hybrid system is viewed as a means for enabling a major manufacturer to meet CAFE requirements in the year 1985 and beyond, while maintaining a product mix which still possesses a substantial fraction of roomy six-passenger automobiles. Implicit in this viewpoint is the assumption that large scale production of hybrid vehicles (or electric vehicles, for that matter) will only happen if one of the major auto manufacturers undertakes it; it will not happen within, or as a result of growth within, the EV industry. (The validity of this assumption should be self-evident to anyone familiar with the state of the EV industry.) This means that transferability of the technology developed for the hybrid vehicle to the auto industry is of prime importance.

b) As a result of this relationship between the hybrid vehicle and the auto industry, the vehicle in which the hybrid propulsion system is to be incorporated is viewed as an evolutionary development of an existing six-passenger vehicle, incorporating those improvements in transmission design, tires, aerodynamics, and materials which can be projected to occur between now and 1985. It is not a radically different vehicle designed uniquely for hybrid propulsion.

c) Designs requiring extensive development at the component level are avoided. In general, production, or pre-production hardware, incorporating the best current technology is utilized. Developmental hardware is utilized only in the event that it would result in a large advantage in system

performance, and the development status is such that production by the mid-80's is a good possibility.

This design philosophy is reflected in the preliminary design described in this report and underlies SCT's approach to Phase II.

Implications for Phase II Hardware Development

The biggest development task associated with the NTHV will be the implementation of the type of control strategy described previously, in such a way that the transitions from engine-off to engine-on and back again are handled smoothly, with no more discomfort to the occupants than the shifting of an automatic transmission and in such a way that emissions requirements are met.

Since the biggest pay-off in terms of reduced fuel consumption, as well as the biggest development task, is associated with the implementation of an optimum control strategy; that is the place to put the emphasis in a near term program. The less this task is diluted by efforts to make unrelated component or subsystem refinements, the better the chances of success in terms of demonstrating a vehicle with greatly reduced fuel consumption and acceptable driveability and performance.

In particular, the pay-off resulting from the development of a totally new vehicle body is inconsistent with the amount of effort and funding which would be needed to accomplish it. Consequently, the design approach taken by SCT, and the approach we recommend for the hardware development program, is to base the design on an existing production car, making only those body and chassis modifications which are needed to make the vehicle representative of projected 1985

production vehicles, and to accommodate the hybrid propulsion system. The bulk of the Phase II effort can thus be devoted to propulsion system development, which is where it belongs; yet, by making intelligent use of the engineering and development which has already gone into a production vehicle, the program can culminate in a hybrid vehicle which is satisfactory in all respects.

8. REFERENCES

1. LARTS Base Year Report: 1967 Origin-Destination Survey, Transportation Association of Southern California, Los Angeles, December, 1971.

2. The Home Interview Survey - What and Why, National Capital Region Transportation Planning Board, Washington, D. C., February, 1968.

3. Nationwide Personal Transportation Study, U. S. Department of Transportation, Federal Highway Administration, Washington, D. C., April, 1972.

4. 1974 National Transportation Study, U. S. Department of Transportation, Washington, D. C., February, 1975.

5. Highway Statistics, U. S. Department of Transportation, Federal Highway Administration, Washington, D. C., Annual.

6. Annual Housing Survey, U. S. Department of Commerce, Bureau of the Census, and U. S. Department of Housing and Urban Development, Washington, D. C., Annual.

7. R. G. Fitzgibbons & L. H. Lindgren, Estimated Weights and Manufacturing Costs of Automobiles, Contract No. DOT-TSC-1067, Task 1 Report, Rath & Strong, Inc., 1975.

8. Near Term Electric Vehicle Program, Phase I, Final Report, General Electric Company, August, 1977.

9. Rulemaking support paper concerning the 1981-84 Passenger Auto Average Fuel Economy Standards. U. S. Department of Transportation, July, 1977.