N O T I C E

THIS DOCUMENT HAS BEEN REPRODUCED FROM MICROFICHE. ALTHOUGH IT IS RECOGNIZED THAT CERTAIN PORTIONS ARE ILLEGIBLE, IT IS BEING RELEASED IN THE INTEREST OF MAKING AVAILABLE AS MUCH INFORMATION AS POSSIBLE

9950-355

(NASA-CR-163039) PRELIMINARY DESIGN DATA PACKAGE, APPENDICES C1 AND C2 (South Coast Technology, Inc.) 202 p HC A10/MF A01 CSCL 13F

N80-27227

Unclas

G3/85 27874

RECEIVED
NASA STI FACILITY
ACCESS DEPT.

JET PROPULSION LABORATORY
CALIFORNIA INSTITUTE OF TECHNOLOGY
PASADENA, CALIFORNIA

A P P E N D I C E S

C1 & C3

PRELIMINARY DESIGN DATA PACKAGE

PREPARED FOR:

JET PROPULSION LABORATORIES

CONTRACT NUMBER 955189

PREPARED BY:

SOUTH COAST TECHNOLOGY, INC.

JULY 25, 1979

TABLE OF CONTENTS

Page

APPENDICES

C1 COMPUTER PROGRAM DOCUMENTATION

C1.1 HYBRID2 . . . . . C-1

C1.2 VSYS & VSYS2 . . . . . C-67

C1.3 CRASH C-108

C1.4 Handling Programs C-132

C1.5 Life Cycle Costs C-175

C3 ENERGY AND MATERIALS C-182

C1.1 HYBRID2

1. Program Description

HYBRID2 computes the fuel and energy consumption of a hybrid vehicle with a bi-modal control strategy over specified component driving cycles. Fuel and energy consumption are computed separately for the two modes of operation. The program also computes yearly average fuel and energy consumption using a composite driving cycle which varies as a function of daily travel.

The modelling techniques used include the following:

Heat engine - represented by a map of bsfc as a function of bmep and rpm, together with a curve of maximum torque versus rpm. The displacement of the engine for which this data is supplied is used as input; the program has provisions for scaling the data to other displacements.

Electric motor/controls - electrical input represented as a constant load plus shaft power divided by a fixed efficiency, in both driving and braking modes. Maximum (driving) and minimum (braking) torque as functions of rpm are also required.

Battery - modelled by a fractional depletion technique using the power averaged over a specified time interval rather than instantaneous power.

Engine accessory load - represented by a curve of torque required vs. system output (torque converter input) rpm. Included in these is the transmission front pump, in addition to belt-driven accessories.

Torque converter - represented by curves of speed and torque

ratios (output/input) as functions of an output speed-torque parameter equal to output speed/output torque. An input speed-torque factor, (input speed)^2/ (input torque), at stall must also be specified.

Gearbox - represented by a set of gear ratios with different efficiencies for each ratio. Spin loss coefficients (exclusive of the front pump) may also be specified.

Differential - same treatment as gearbox.

Vehicle road load - represented by a combination of an aerodynamic load (proportional to speed squared) and tire rolling resistance. The rolling resistance coefficients can include a constant term and one which is linear with vehicle speed.

The program structure is modular, with the control strategy and shift strategies being contained in separate subroutines. A breakdown of the program routines and their functions is as follows:

1. HYBRID2 (Main Program)
   - Input of case data
   - Output
   - Numerical integration
   - Computation of yearly average fuel and energy consumption from individual driving cycle results.
2. VEHIC
   - Computation of road loads, power flow through the vehicle system up to the torque converter output.

- Computation of derivatives of all variables of integration.

3. HYREAD

   - Input of fixed, detailed component data.

4. GRSHFT

   - Controls transmission gear ratio in accord with a pre-set shift strategy.

5. PMOVR

   - Controls heat engine/motor power split in accord with a pre-set control strategy.

6. TQCON

   - Computes torque converter input speed and torque given output conditions, or output torque and input speed given input torque and output speed.

7. FILTER

   - Filters battery output power to provide a smoothed battery output power curve.

8. INT1, INT2

   - One and two dimensional interpolation routines, respectively.

PARAMETERS		UNITS	DESCRIPTION
EQUATION	PROGRAM		
	NRPM	—	Number of RPM's (engine)
	NMEP	—	Number of BMEP's and BSFC's
	FUELSG	g/cc	Fuel specific gravity
	DISPL	cc	Displacement
	SKALE	—	Scale factor for engine
	RPM(20)	rpm	RPM (engine)
	TQMAX(20)	ntm	Maximum torque (engine)
	BMEP(20)	bar	Brake mean effective pressure
	BSFC(20,20)	gm/kW·hr	Brake specific fuel consumption
	NOP	—	Number of engine powers
	RPMBST	rpm	Best operating speed (engine)
	PBEST	kW	Best operating power (engine)
	PEOP(20)	kW	Engine power
	RPMEOP(20)	rpm	Optimum engine speed at specified power
	NSPMO	—	Number RPM's (motor)
	EMUM	—	Motor efficiency
	EMUG	—	Generator efficiency
	TMSKL	—	Scale factor for motor
	PINNLD	kW	No load input power (motor)
	RPMIDL	rpm	Idle speed (motor)
	RPMOPM	rpm	Best operating speed (motor)
	SPMO(20)	rpm	RPM (motor)
	TMOMAX(20)	ntm	Maximum torque (motor)
	TMOMIN(20)	ntm	Minimum torque (motor)
	JCVT	—	=1→ continuously variable transmission (CVT)
	EMUCVT	—	Efficiency (CVT)
	RATUP	—	Speed up ratio (CVT)
	RATDN	—	Slowdown ratio (CVT)
	NTSP	—	Number of TSPs, TQRs and SPRs
	CTCZRO	rpm²/ntm	NI**2/TI (STALL)
	TSP(20)	rpm/√ntm	NO/√TO (MODE 1)
	TSPR(20)		NO/√TO (MODE 2)
	TQR(20)	—	TO/TI
	SPR(20)	—	NO/NI
	NGEAR	—	Number of gears
	NTH	—	Number of THSETs, UPSHIFTs, and DNSHIFTs
	UPSEL	rpm	Shift up for electric operation
	DNSEL	rpm	Shift down for electric operation
	NLOCK(5)	—	Lockup (gearbox)
	TRATIO(5)	—	Ratio (gearbox)

PARAMETERS		UNITS	DESCRIPTION
EQUATION	PROGRAM		
	CT2(5)	nt·m/rpm	Spin loss coefficient (gear box)
	EMUT(5)	—	Torque efficiency (gear box)
	THSET(5)	KW	Set of powers defining shift function
	UPSHFT(5)	rpm	Upshift RPM
	DNSHFT(5)	rpm	Downshift RPM
	NDDSCH	—	Number discharge depths (battery)
	NDENS	—	Number of specific powers (battery)
	WE	KG	Battery Mass
	EBMAX	wh/KG	Energy density (battery)
	EMURG	—	Average regeneration efficiency (battery)
	EMURG2	—	Maximum regeneration efficiency (batte
	CHGEFF	—	Recharge efficiency (battery)
	DDISCH(20)	—	Discharge depth (battery)
	CYCLES(20)	—	Cycle life (battery)
	PDENS(20)	KW	Specific power (battery)
	EDENS(20)	MJ	Specific energy (battery)
	DRATIO	—	Differential ratio
	CD1	nt·m	Spin loss coefficient (differential)
	CD2	nt·m/rpm	Spin loss coefficient (differential)
	EMUD	—	Torque efficiency (differential)
	RTIRE	m	Rolling radius (tire)
	CTIRE1	—	Rolling resistance coefficient (tire)
	CTIRE2	1/(km/hr)	Rolling resistance coefficient (tire)
	NAX	—	Number speeds and torques (accessory load)
	RPMAX(20)	rpm	Speed (accessory load)
	TAX(20)	nt·m	Torque (accessory load)
	VMASS	KG	Vehicle mass
	DLI	kg·m²	Driveline inertia
	CDA	m²	Drag coefficient * area
	NCYCLE	—	Number of driving cycles
	NTC(3)	—	TIMC, SPEDC matrix size
	NPRTC(3)	—	Output print flag for driving cycle
	NUNITS	—	Miles/hr to km/hr conversion flag
	DTC(3)	SEC	Time interval for driving cycles
	TFC(3)	SEC	Final time for driving cycles
	TIMC(3,200)	SEC	Time (driving cycle
	SPEDC(3,200)	KM/HR	Speed
	NCOMP	—	DSUP, DNC, GAMMA matrix size
	DSTAV	—	Average usage

TRAVEL DISTRIBUTION DATA

PARAMETERS		UNITS	DESCRIPTION	
EQUATION	PROGRAM			
	DSUP(30)	km	Maximum distance-driving cycle	TRAVEL DISTRIBUTION DATA
	DNC(30)	—	Fraction of total distance	
	GAMMA(30,3)	—	Driving cycle weights	
	NCASE	—	Number of cases	
	TEOMIN	nt·m	Minimum engine torque (mode 1)	
	TEOMN2	nt·m	Minimum engine torque (Mode 2)	
	DBMAX	—	Battery discharge limit	
	PEOMIN	kw	Heat engine minimum power	
	VMAX	km/hr	Transition speed	
	DTFLTR	—	Low-pass filter sub-interval length	

VARIABLES		UNITS	DESCRIPTION
EQUATION	PROGRAM		
	A(3)	m/sec²	Vehicle acceleration vector
	ABPI	J	Absolute value battery power
	BDBAR(30)	KW	Battery energy consumption - composite cycle
	BLIFE	KM	Battery life (expected)
	BPI	J	Battery power
	DBAR(30)	KM	Interpolated values of driving cycle distance
	DDAV	KM	Average distance on driving cycle
	DELT	SEC	Time interval size
	DEPL(3)	1/KM	Battery depletion on each cycle
	DIST(3)	M	Distance on each cycle
	DLOW	KM	Minimum distance on driving cycle
	DT	SEC	Time increment
	EB	MJ	System output energy - Mode 1
	EB2	MJ	System output energy - Mode 2
	EBMAX	wh/KG	Energy density (battery)
	ECAV	MJ/KM	Yearly average energy consumption
	ECBAR(30)	MJ/KM	Composite cycles energy consumption - Mode 1
	ECBAR2(30)	MJ/KM	Composite cycles energy consumption - Mode 2
	ECHE(3)	MJ/KM	Cycle heat engine energy consumption
	ECMAV(30)	MJ/KM	Composite cycles mode averaged energy consumption
	ECONS(3)	MJ/KM	Cycle energy consumption - Mode 1
	ECONS2(3)	MJ/KM	Cycle energy consumption - Mode 2
	ECSYS(3)	MJ/KM	Cycle system energy consumption
	EHEAV	MJ/KM	Yearly avg. heat engine energy consumption
	EHEBAR(30)	MJ/KM	Composite cycles heat engine energy consumption
	EK(80)	—	4DCT [illegible] vector
	EKIN	MJ	Kinetic energy
	ERG(2800)	MJ	Battery specific energy
	ESYSAV	MJ/KM	Yearly average system energy consumption
	ESYSBR(30)	MJ/KM	Composite cycles system energy consumption
	FCAV	g/KM	Yearly average fuel consumption
	FCBAR(30)	g/KM	Composite cycles fuel consumption - Mode 1
	FCBAR2(30)	g/KM	Composite cycles fuel consumption - Mode 2
	FCMAV(30)	g/KM	Composite cycles mode averaged fuel consumption
	FCONS	g/KM	Cycle fuel consumption, Mode 1
	FCONS2	g/KM	Cycle fuel consumption, Mode 2
	FEAV	KM/L	Yearly averaged fuel economy
	HEEF	—	Heat engine energy fraction
	IBP(20)	—	Storage for cycle battery power distribution

VARIABLES		UNITS	DESCRIPTION
EQUATION	PROGRAM		
	INT1	—	Interpolation subroutine (1-dimensional)
	INT2	—	Interpolation subroutine (2-dimensional)
	ITIBP	—	Total number of cycle time interations
	K	—	Print skip control counter
	NPRNT	—	Number of skips between successive prints
	NTIME	—	Number of TIME's and STEP's
	PBRK	KW	Braking power
	PED	KW	Engine output power
	PED2	KW	Engine output power 2
	PEOP	KW	Set of powers for optimum power curve
	PGO	KW	Regenerative output power
	PMO	KW	Motor output power
	PMO2	KW	Motor output power 2
	PMOT(2800)	W	Storage for cycle specific battery power.
	PRW	KW	Rear wheel power
	PSO	KW	Hybrid system output power
	PSO2	KW	Hybrid system output power 2
	RANGE(30)	KM	Range for new battery discharge limit
	RFRAC(30)	—	Composite cycles fraction of total distance
	RPMTC1	rpm	Torque converter RPM - Mode 1
	RPMTC2	rpm	Torque converter RPM - Mode 2
	SPEED(200)	KM/HR	Driving cycle speed
	SPENG(25)	MJ	Composite cycle specific energy - Mode 1
	SPPWR(25)	KW	Composite cycles specific power - Mode 1
	T	SEC	Time in simulation
	TIME(200)	SEC	Driving cycle time
	TTMP	SEC	Time holder
	V(6)	km/hr	Vehicle speed vector
	VAVG(3)	m/sec	Average velocity
	VBAR(25)	m/sec	Composite cycles average speed
	VMASS2	kg	Effective vehicle mass
	VMPS	m/sec	Vehicle speed
	VRECIP	sec/m	Reciprocal of avg velocity for composite cycl
	VTMP	m/sec	Velocity hold
	VTMPL	m/sec	Velocity hold
	WPAV	KW/km	Yearly average wallplug output

VARIABLES		UNITS	DESCRIPTION
EQUATION	PROGRAM		
	Y(1)	MJ	Aerodynamic + rolling resistance energy loss
	Y(2)	MJ	Drive train energy output - Mode 1
	Y(3)	MJ	Drive train energy output - Mode 2
	Y(4)	MJ	Braking output energy
	Y(5)	MJ	System output energy - Mode 1
	Y(6)	MJ	System output energy - Mode 2
	Y(7)	MJ	Engine output energy - Mode 1
	Y(8)	MJ	Engine output energy - Mode 2
	Y(9)	MJ	Motor shaft output energy - Mode 1
	Y(10)	MJ	Motor shaft output energy - Mode 2
	Y(11)	m/sec	Velocity
	Y(12)	Km	Distance
	Y(13)	MJ	Generator output energy
	Y(14)	sec	Heat engine on time - Mode 1
	Y(15)	sec	Heat engine on time - Mode 2
	Y(16)	g	Fuel output energy - Mode 1
	Y(17)	g	Fuel output energy - Mode 2
	Y(18)	MJ	System Output energy - Mode 1
	Y(19)	MJ	System Output energy - Mode 2
	YDOT(20)	—	Runga - Kutta integration variables
	YTMP(20)	—	Runga - Kutta integration variables
	MOT	—	Number of entries in vector PMOT after power function smoothed
	JGEAR	—	Gear Mode 1 Currentium
	JGEAR2	—	Gear Mode 2 Currentium
	NTM	—	Number of entries in vector PMOT
	TF	sec	Final time in simulation of cycle

ORIGINAL PAGE IS
OF POOR QUALITY

VARIABLES		UNITS	DESCRIPTION
EQUATION	PROGRAM		
	BRMEP	bar	[illegible]
	BRMEP2	bar	Brake [illegible] 2
	FA	nt	Aerodynamic drag force
	FAC	nt	Acceleration force on vehicle
	FC	g/hr	Engine fuel rate - Mode 1
	FC2	g/hr	Engine fuel rate - Mode 2
	FG	nt	Road grade force
	FNET	nt	Net vehicle force
	FR	nt	Rolling resistance force
	PA	KW	Aerodynamic drag power
	PD	KW	Differential output power
	PLTC	KW	Power load on torque converter - Mode.
	PLTC2	KW	Power load on torque converter - Mode
	PR	KW	Rolling resistance power
	PRW	KW	Rear wheel power
	PT	KW	Transmission output power
	RPMDO	rpm	Differential output rpm
	RPMEO	rpm	Engine output rpm
	RPMEO2	rpm	[illegible] 2
	RPMSO	rpm	Hybrid system output rpm
	RPMSO2	rpm	Hybrid system output rpm 2
	RPMTO	rpm	Transmission output [illegible]
	SFC	g/KWH	[illegible]
	TDO	nt·m	Differential output torque
	TEO	nt·m	Engine output torque
	TEO2	nt·m	Engine output torque 2
	TLFD	nt·m	Diff [illegible]
	TLFT	nt·m	Transmission torque loss
	TLFT2	nt·m	Transmission torque loss 2
	TSO	nt·m	Hybrid [illegible] output torque
	TSO2	nt·m	Hybrid system output torque 2
	TTO	nt·m	Transmission output torque
	ULC	—	Gear lockup flag Mode 1
	ULC2	—	Gear lockup flag Mode 2

VARIABLES		UNITS	DESCRIPTION
EQUATION	PROGRAM		
	CC	RW/(rad/sec)	(rad/sec)/(1000 rpm)
	PCOM	KW	
	PHEMAX	KW	Maximum heat engine power
	PHEMIN	KW	Minimum heat engine power
	PMMAX	KW	Maximum motor power
	PNOM	KW	Nominal power
	RPMTC	rpm	Torque converter rpm
	RPMTCN	rpm	Torque converter input rpm
	RPMTCO	rpm	Torque converter output rpm
	TACC	nt·m	Accessory output torque
	TGO	nt·m	Generator output torque
	THEMAX	nt·m	Maximum heat engine torque
	TMMAX	nt·m	Maximum motor torque
	TMMIN	nt·m	Minimum motor torque
	TMO	nt·m	Motor output torque
	TMO2	nt·m	Motor output torque 2
	TTCIN	nt·m	Torque converter input torque
	TTCN1	nt·m	Torque converter input torque - Mode 1
	TTCN2	nt·m	Torque converter input torque - Mode 2
	TTCO	nt·m	Torque converter output torque
	JBRK	--	Braking (not) required flag

ORIGINAL PAGE IS OF POOR QUALITY

VARIABLES		UNITS	DESCRIPTION
EQUATION	PROGRAM		
	SPRAT	—	speed ratio
	TQRAT	—	[illegible]
	TSPAR	[illegible]	[illegible]
	TSPAR2	[illegible]	[illegible] 2

GENERAL RESEARCH CORPORATION

FORTRAN CODING FORM

PROGRAM	HYRCID2	NAME	
ROUTINE	MAIN PROGRAM	DATE	PAGE OF

TYPE	STATEMENT NO.	CONT	FORTRAN STATEMENT (0 ZERO, 0 ALPHA O; 1 ONE, 1 ALPHA I; 2 TWO, Z ALPHA Z)	SERIAL NUMBER
			RUN DATA	
		N	CASE	
			CASE DATA	
		TE	OMIN TEOMN2 DAMAX PEOMIN VMAX	
		DT	FLTR	

ORIGINAL PAGE IS OF POOR QUALITY

FORM NO. GRC 109 REV. 1

GENERAL RESEARCH CORPORATION

FORTRAN CODING FORM

PROGRAM	HYBRID2	NAME	
ROUTINE	HYPEAD	DATE	PAGE 1 OF 3

FORTRAN STATEMENT

0 ZERO 1 = ONE 2 = TWO
0 ALPHA 0 1 = ALPHA 1 2 = ALPHA 2

TYPE	STATEMENT NO.	CONT	FORTRAN STATEMENT							SERIAL NUMBER
			ENGINE DATA:							
		NRPM	NMEP	FUELSG	DISPL	SKALE				
	RPM(1)		TQMAX(1)	...	RPM(NRPM)	TQMAX(NRPM)	BMEP(1)	...		
BMEP(NMEP)			BSFC(1,1)	...	BSFC(NRPM,NMEP)					
		NOP	RPMBST	PBEST						
	PEOP(1)		RPMEOP(1)	...	PEOP(NOP)	RPMEOP(NOP)				
			MOTOR/GENERATOR DATA							
		NSPMO	EMUM	EMUG	TMSKL	PINNLD	RPMIDL	RPMOPM		
	SPMO(1)		TMOMAX(1)	TMOMIN(1)	...	SPMO(NSPMO)	TMOMAX(NSPMO)	TMOMIN(NSPMO)		
		JCVT								
			CONTINUOUS VARIABLE TRANSMISSION DATA							
	EMUCVT		RATUP	RATDN						
			TORQUE CONVERTOR DATA							
		NTSP								
	CTCZRO		[illegible]	TQR(1)	[illegible]	...	TSP(NTSP)	TQR(NTSP)		
SPR(NTSP)										

ORIGINAL PAGE IS OF POOR QUALITY

FORM NO. GR

GRC
GENERAL RESEARCH CORPORATION

FORTRAN CODING FORM

PROGRAM: HYBRID2
ROUTINE: HYREAD
NAME:
DATE:
PAGE 2 OF 3

FORTRAN STATEMENT — 0 ZERO, 0 ALPHA 0; 1 = ONE, 1 = ALPHA 1; 2 = TWO, 2 = ALPHA Z

STATEMENT NO.	CONT	FORTRAN STATEMENT							SERIAL NUMBER
		TRANSMISSION DATA							
	NGEAR	NTH	UPSEL	DNSEL					
NLOCK(1)		TRATIO(1)	CT1(1)	CT2(1)	EMUT(1)	...	NLOCK(NGEAR)		
RATIO(NGEAR)		CT1(NGEAR)	CT2(NGEAR)	EMUT(NGEAR)					
THSET(1)		UPSHFT(1)	DNSHFT(1)	...	THSET(NTH)	UPSHFT(NTH)	DNSHFT(NTH)		
		BATTERY DATA							
NDDSCH		NDENS	WB	EBMAX	EMURG	EMURG2	CHGEFF		
DDISCH(1)		CYCLES(1)	...	DDISCH(NDDSCH)	CYCLES(NDDSCH)				
PDENS(1)		EDENS(1)	...	PDENS(NDENS)	EDENS(NDENS)				
		DIFFERENTIAL AND TIRE DATA							
DRATIO		CD1	CD2	EMUD	RTIRE	CTIRE1	CTIRE2		
		ACCESSORY DATA							
RPMAX(1)	NAX	TAX(1)	...	RPMAX(NAX)	TAX(NAX)				
		VEHICLE DATA							
	VMASS	DLI	CDA						
		DRIVING CYCLE DATA							
NCYCLE									
NTC(1)		NPRTC(1)	NUNITS	DTC(1)	TTC(1)	...	NTC(NCYCLE)		
PRTC(NCYCLE)		NUNITS	DTC(NCYCLE)	TTC(NCYCLE)					
TIMC(1,1)		SPEDC(1,1)	...	TIMC(NCYCLE,NT)	SPEDC(NCYCLE,NT)				

FORM NO. GRC 103 REV. 1

GRC
GENERAL RESE[illegible]CH CORPORATION

FOR[illegible]RAN CODING FORM

PROGRAM	HYBR[illegible]	NAME	
ROUTINE	HYR[illegible]D	DATE	PAGE 3 OF 3

STATEMENT NO.	CONT	FORTRAN STATEMENT (0 ZERO, 0 ALPHA 0; 1 = ONE, 1 = ALPHA 1; 2 = TWO, 2 = ALPHA 2)	SERIAL NUMBER
		[illegible]	
	N	COM[illegible] DSTAV DWARM	
DS[illegible]		[illegible](1) DNC(1) GAMMA(1,1) . . . DSUP[illegible] DNC(NCDMF) GAMMA(NCOMP NCYCLE)	

HYBRID2

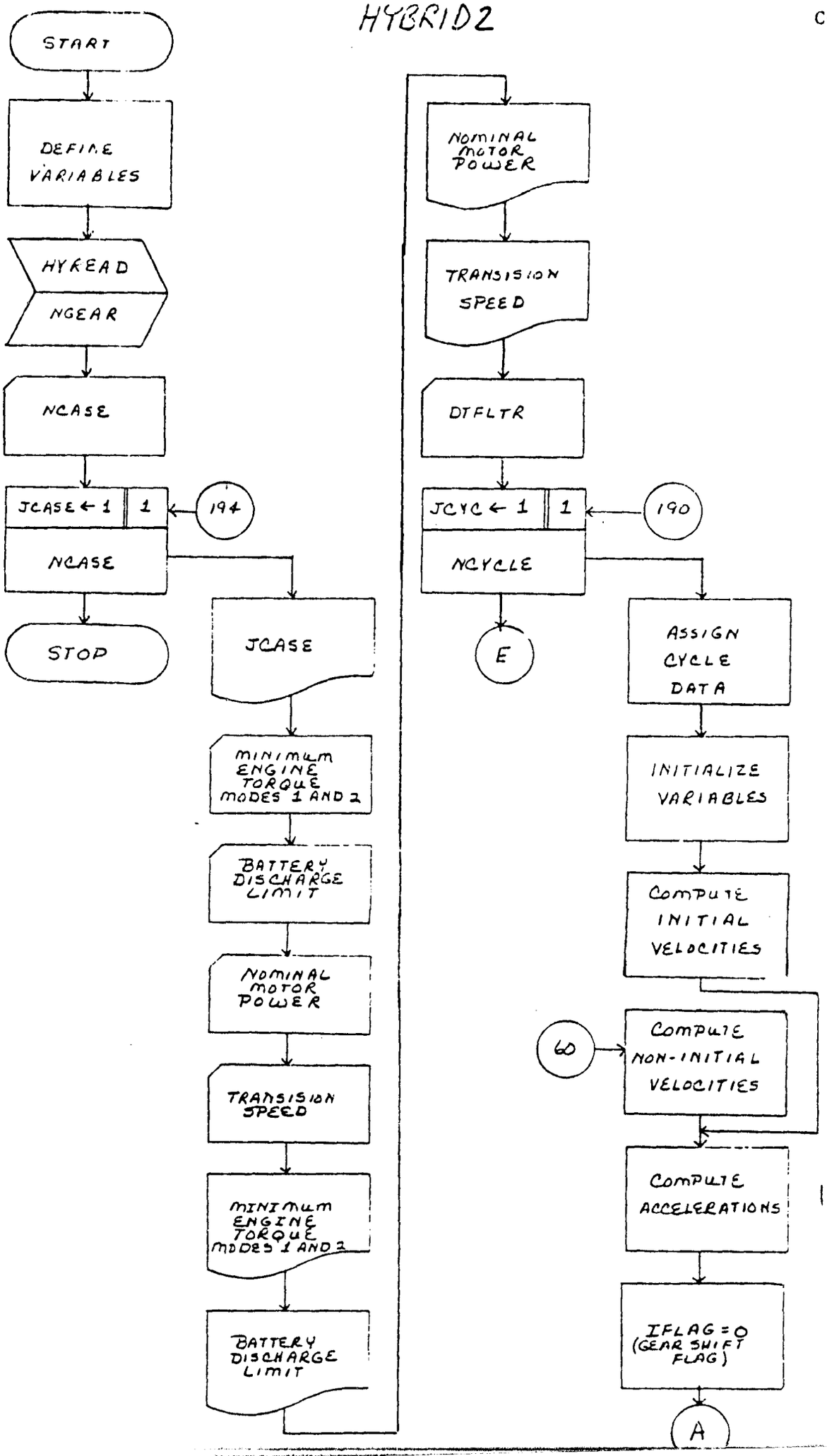
START
DEFINE VARIABLES
HYREAD
NGEAR
NCASE
JCASE ← 1
1
194
NCASE
STOP
JCASE
MINIMUM ENGINE TORQUE MODES 1 AND 2
BATTERY DISCHARGE LIMIT
NOMINAL MOTOR POWER
TRANSISION SPEED
MINIMUM ENGINE TORQUE MODES 1 AND 2
BATTERY DISCHARGE LIMIT
NOMINAL MOTOR POWER
TRANSISION SPEED
DTFLTR
JCYC ← 1
1
190
NCYCLE
E
ASSIGN CYCLE DATA
INITIALIZE VARIABLES
COMPUTE INITIAL VELOCITIES
60
COMPUTE NON-INITIAL VELOCITIES
COMPUTE ACCELERATIONS
IFLAG = 0 (GEAR SHIFT FLAG)
A

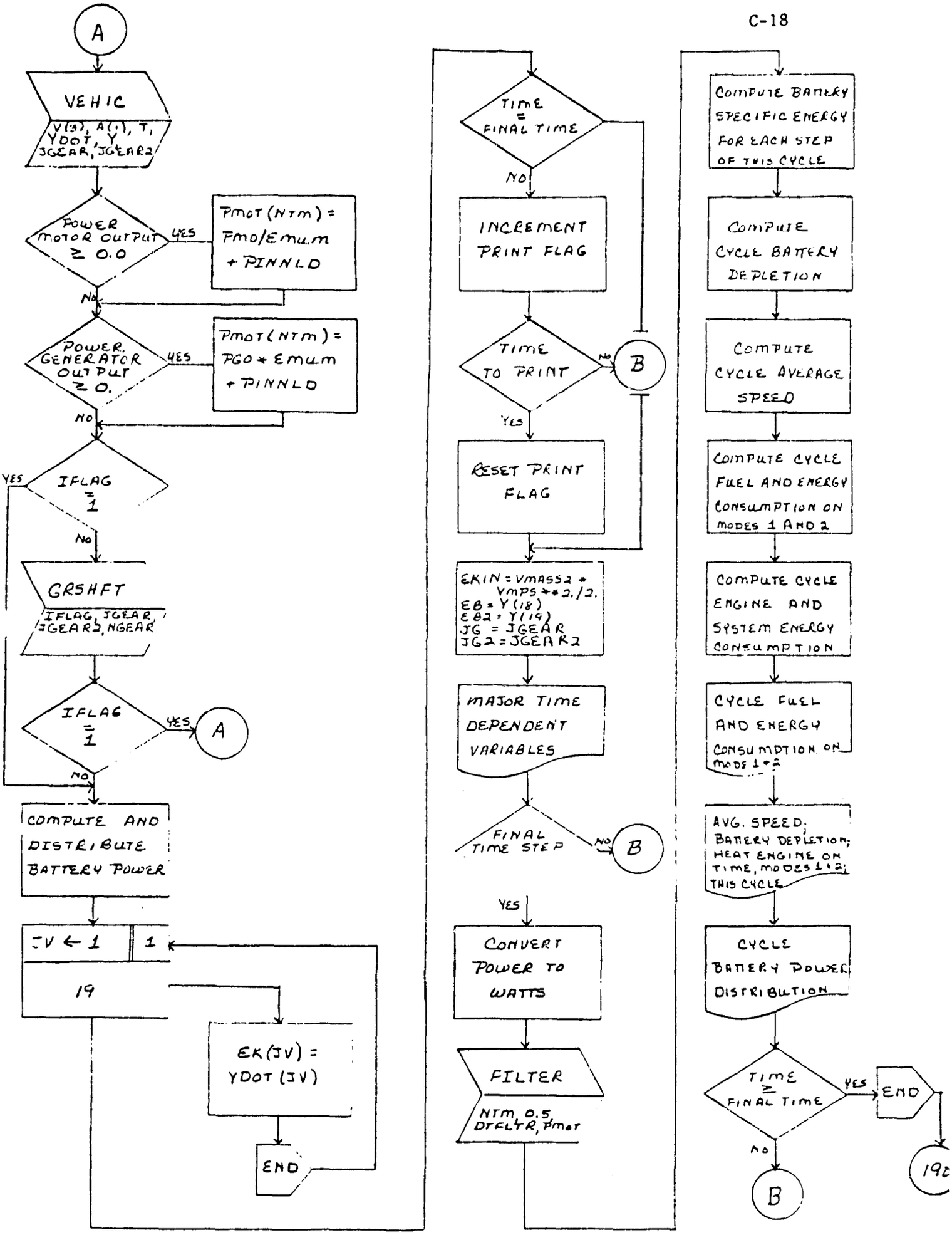
A
VEHIC
V(3), A(1), T, YDOT, Y JGEAR, JGEAR2
POWER MOTOR OUTPUT ≥ 0.0
YES
PMOT (NTM) = PMO/EMUM + PINNLD
NO
POWER GENERATOR OUTPUT ≥ 0.
YES
PMOT (NTM) = PGO * EMUM + PINNLD
NO
IFLAG = 1
YES
NO
GRSHFT
IFLAG, JGEAR, JGEAR2, NGEAR
IFLAG = 1
YES
A
NO
COMPUTE AND DISTRIBUTE BATTERY POWER
JV ← 1
1
19
EK(JV) = YDOT (JV)
END
TIME = FINAL TIME
NO
INCREMENT PRINT FLAG
TIME TO PRINT
NO
B
YES
RESET PRINT FLAG
EKIN = VMASS2 * VMPS**2./2.
EB = Y(18)
EB2 = Y(19)
JG = JGEAR
JG2 = JGEAR2
MAJOR TIME DEPENDENT VARIABLES
FINAL TIME STEP
NO
B
YES
CONVERT POWER TO WATTS
FILTER
NTM, 0.5, DTFLTR, PMOT
COMPUTE BATTERY SPECIFIC ENERGY FOR EACH STEP OF THIS CYCLE
COMPUTE CYCLE BATTERY DEPLETION
COMPUTE CYCLE AVERAGE SPEED
COMPUTE CYCLE FUEL AND ENERGY CONSUMPTION ON MODES 1 AND 2
COMPUTE CYCLE ENGINE AND SYSTEM ENERGY CONSUMPTION
CYCLE FUEL AND ENERGY CONSUMPTION ON MODES 1+2
AVG. SPEED; BATTERY DEPLETION; HEAT ENGINE ON TIME, MODES 1+2; THIS CYCLE
CYCLE BATTERY POWER DISTRIBUTION
TIME ≥ FINAL TIME
YES
END
NO
B
19b

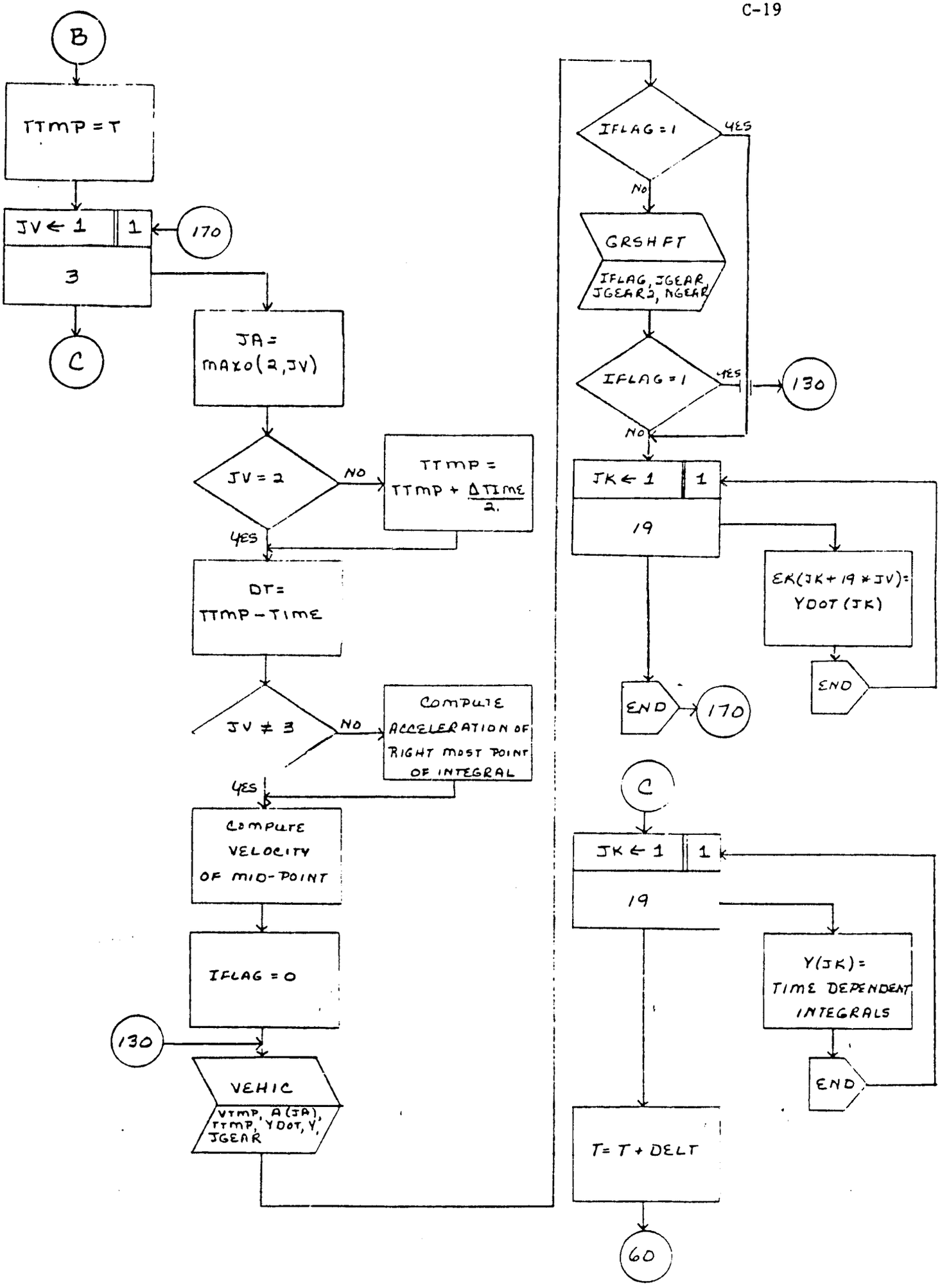
B
TTMP = T
JV ← 1
1
170
3
C
JA = MAX0(2,JV)
JV = 2
NO
TTMP = TTMP + ΔTIME/2.
YES
DT = TTMP − TIME
JV ≠ 3
NO
COMPUTE ACCELERATION OF RIGHT MOST POINT OF INTEGRAL
YES
COMPUTE VELOCITY OF MID-POINT
IFLAG = 0
130
VEHIC
VTMP, A(JA), TTMP, YDOT, Y, JGEAR
IFLAG = 1
YES
NO
GRSHFT
IFLAG, JGEAR, JGEAR2, NGEAR
IFLAG = 1
YES
130
NO
JK ← 1
1
19
EK(JK + 19 * JV) = YDOT(JK)
END
END
170
C
JK ← 1
1
19
Y(JK) = TIME DEPENDENT INTEGRALS
END
T = T + DELT
60

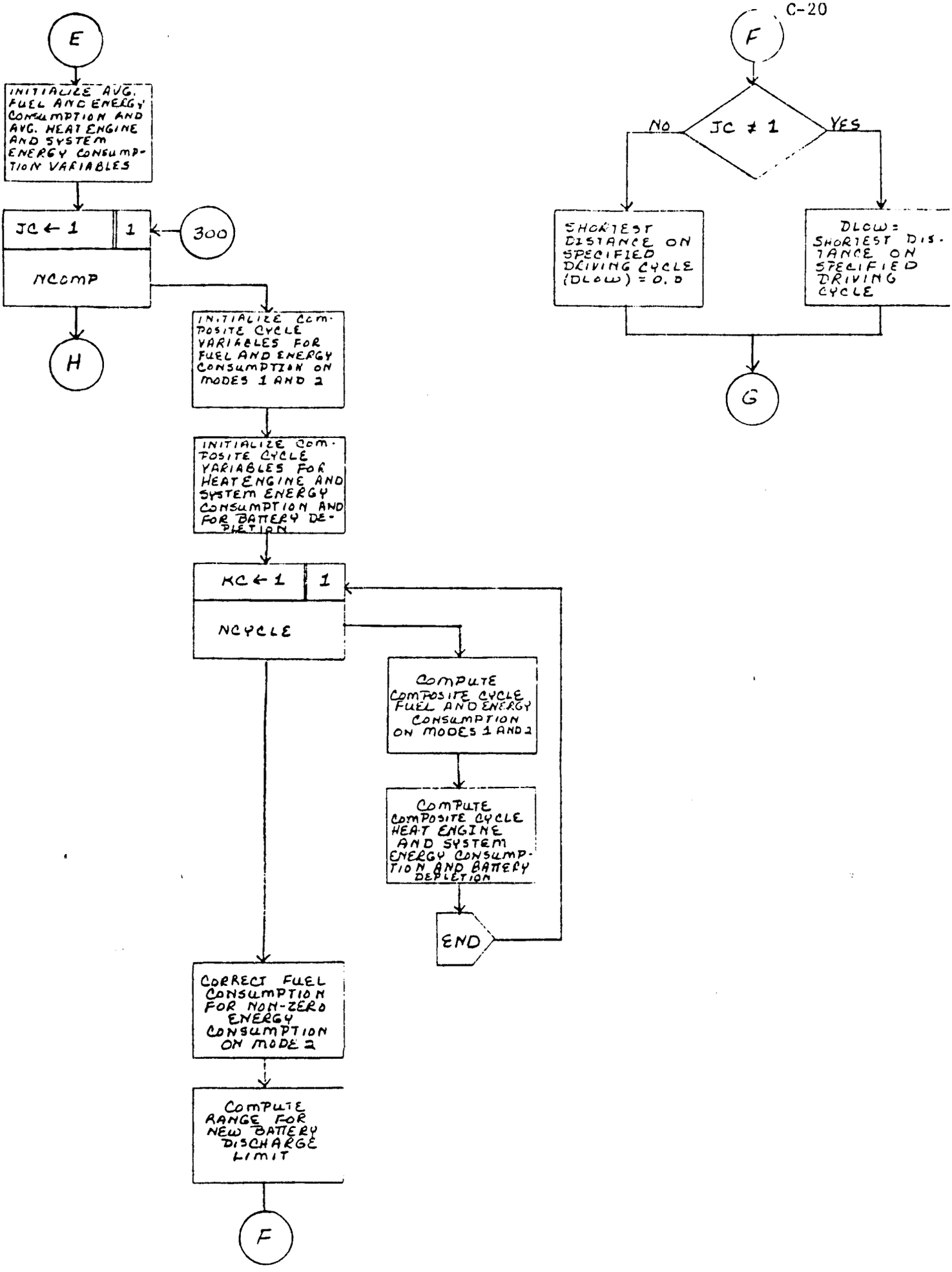
E
INITIALIZE AVG. FUEL AND ENERGY CONSUMPTION AND AVG. HEAT ENGINE AND SYSTEM ENERGY CONSUMPTION VARIABLES
JC ← 1
1
300
NCOMP
H
INITIALIZE COMPOSITE CYCLE VARIABLES FOR FUEL AND ENERGY CONSUMPTION ON MODES 1 AND 2
INITIALIZE COMPOSITE CYCLE VARIABLES FOR HEAT ENGINE AND SYSTEM ENERGY CONSUMPTION AND FOR BATTERY DEPLETION
KC ← 1
1
NCYCLE
COMPUTE COMPOSITE CYCLE FUEL AND ENERGY CONSUMPTION ON MODES 1 AND 2
COMPUTE COMPOSITE CYCLE HEAT ENGINE AND SYSTEM ENERGY CONSUMPTION AND BATTERY DEPLETION
END
CORRECT FUEL CONSUMPTION FOR NON-ZERO ENERGY CONSUMPTION ON MODE 2
COMPUTE RANGE FOR NEW BATTERY DISCHARGE LIMIT
F
F
JC ≠ 1
NO
YES
SHORTEST DISTANCE ON SPECIFIED DRIVING CYCLE (DLOW) = 0.0
DLOW = SHORTEST DISTANCE ON SPECIFIED DRIVING CYCLE
G

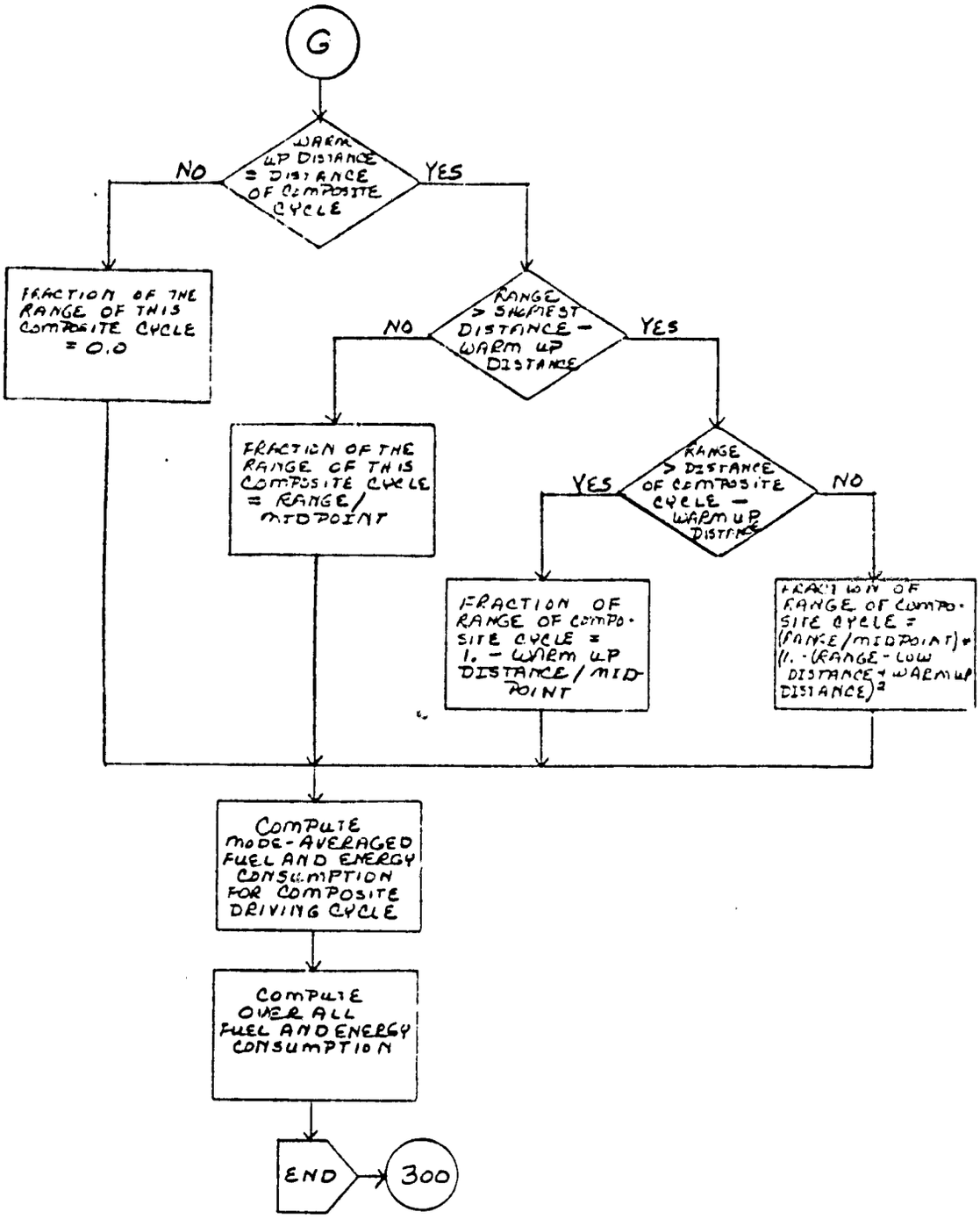
G
WARM UP DISTANCE = DISTANCE OF COMPOSITE CYCLE
NO
YES
FRACTION OF THE RANGE OF THIS COMPOSITE CYCLE = 0.0
RANGE > SHORTEST DISTANCE - WARM UP DISTANCE
NO
YES
FRACTION OF THE RANGE OF THIS COMPOSITE CYCLE = RANGE/MIDPOINT
RANGE > DISTANCE OF COMPOSITE CYCLE - WARM UP DISTANCE
YES
NO
FRACTION OF RANGE OF COMPOSITE CYCLE = 1. - WARM UP DISTANCE / MIDPOINT
FRACTION OF RANGE OF COMPOSITE CYCLE = (RANGE/MIDPOINT) * (1. - (RANGE - LOW DISTANCE + WARM UP DISTANCE)²
COMPUTE MODE-AVERAGED FUEL AND ENERGY CONSUMPTION FOR COMPOSITE DRIVING CYCLE
COMPUTE OVER ALL FUEL AND ENERGY CONSUMPTION
END
300

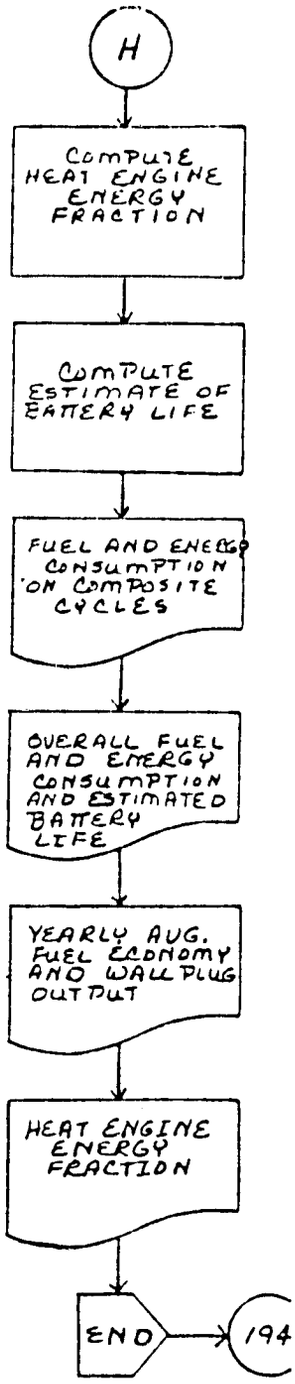
H
COMPUTE HEAT ENGINE ENERGY FRACTION
COMPUTE ESTIMATE OF BATTERY LIFE
FUEL AND ENERGY CONSUMPTION ON COMPOSITE CYCLES
OVERALL FUEL AND ENERGY CONSUMPTION AND ESTIMATED BATTERY LIFE
YEARLY AVG. FUEL ECONOMY AND WALL PLUG OUTPUT
HEAT ENGINE ENERGY FRACTION
END
194

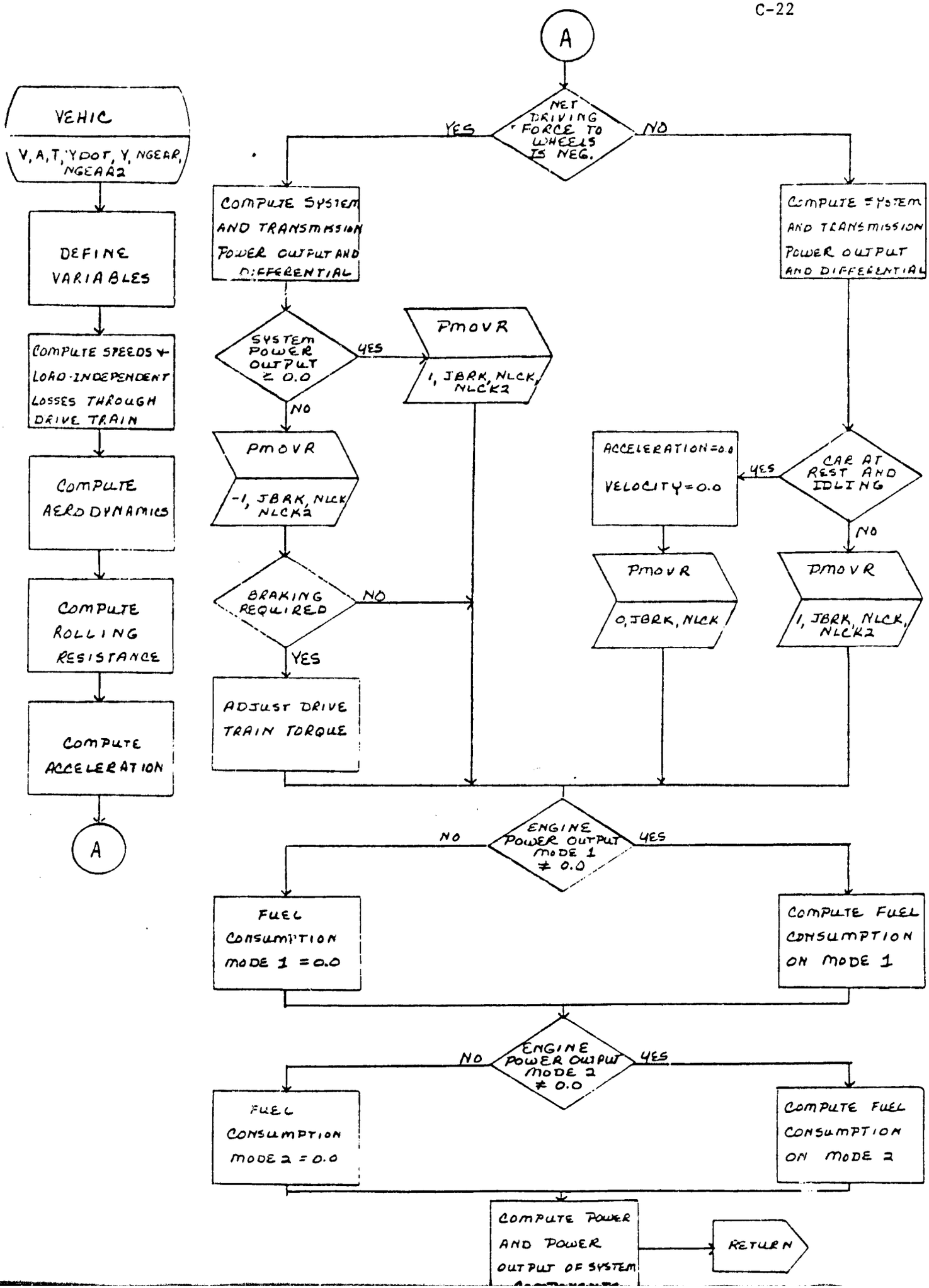
VEHIC
V, A, T, YDOT, Y, NGEAR, NGEAR2
DEFINE VARIABLES
COMPUTE SPEEDS & LOAD-INDEPENDENT LOSSES THROUGH DRIVE TRAIN
COMPUTE AERODYNAMICS
COMPUTE ROLLING RESISTANCE
COMPUTE ACCELERATION
A
A
NET DRIVING FORCE TO WHEELS IS NEG.
YES
NO
COMPUTE SYSTEM AND TRANSMISSION POWER OUTPUT AND DIFFERENTIAL
COMPUTE SYSTEM AND TRANSMISSION POWER OUTPUT AND DIFFERENTIAL
SYSTEM POWER OUTPUT ≥ 0.0
YES
PMOVR
1, JBRK, NLCK, NLCK2
NO
PMOVR
-1, JBRK, NLCK, NLCK2
BRAKING REQUIRED
NO
YES
ADJUST DRIVE TRAIN TORQUE
CAR AT REST AND IDLING
YES
ACCELERATION=0.0
VELOCITY=0.0
NO
PMOVR
0, JBRK, NLCK
PMOVR
1, JBRK, NLCK, NLCK2
ENGINE POWER OUTPUT MODE 1 ≠ 0.0
NO
YES
FUEL CONSUMPTION MODE 1 = 0.0
COMPUTE FUEL CONSUMPTION ON MODE 1
ENGINE POWER OUTPUT MODE 2 ≠ 0.0
NO
YES
FUEL CONSUMPTION MODE 2 = 0.0
COMPUTE FUEL CONSUMPTION ON MODE 2
COMPUTE POWER AND POWER OUTPUT OF SYSTEM
RETURN

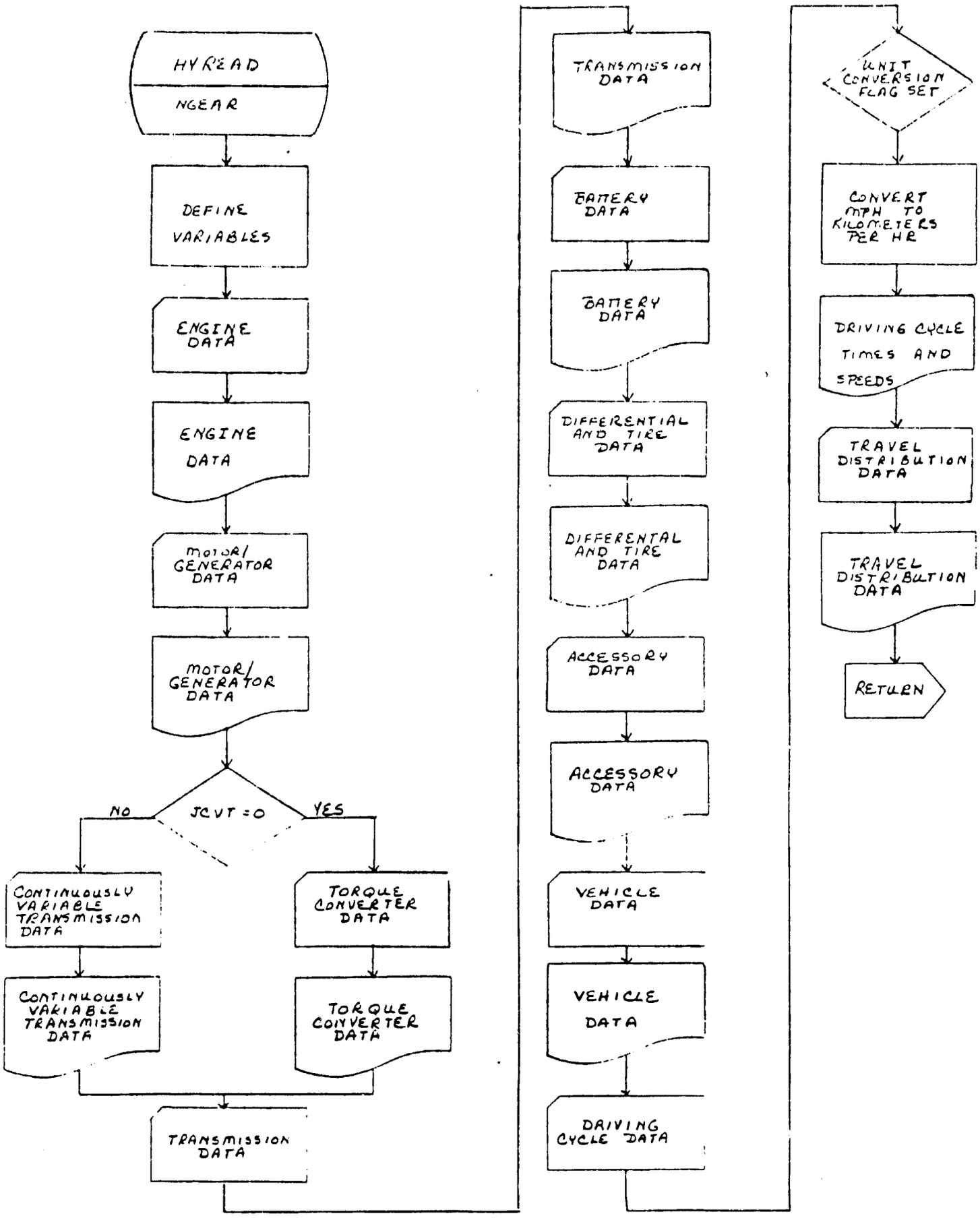
HYREAD
NGEAR
DEFINE VARIABLES
ENGINE DATA
ENGINE DATA
MOTOR/ GENERATOR DATA
MOTOR/ GENERATOR DATA
JCVT = 0
NO
YES
CONTINUOUSLY VARIABLE TRANSMISSION DATA
CONTINUOUSLY VARIABLE TRANSMISSION DATA
TORQUE CONVERTER DATA
TORQUE CONVERTER DATA
TRANSMISSION DATA
TRANSMISSION DATA
BATTERY DATA
BATTERY DATA
DIFFERENTIAL AND TIRE DATA
DIFFERENTAL AND TIRE DATA
ACCESSORY DATA
ACCESSORY DATA
VEHICLE DATA
VEHICLE DATA
DRIVING CYCLE DATA
UNIT CONVERSION FLAG SET
CONVERT MPH TO KILOMETERS PER HR
DRIVING CYCLE TIMES AND SPEEDS
TRAVEL DISTRIBUTION DATA
TRAVEL DISTRIBUTION DATA
RETURN

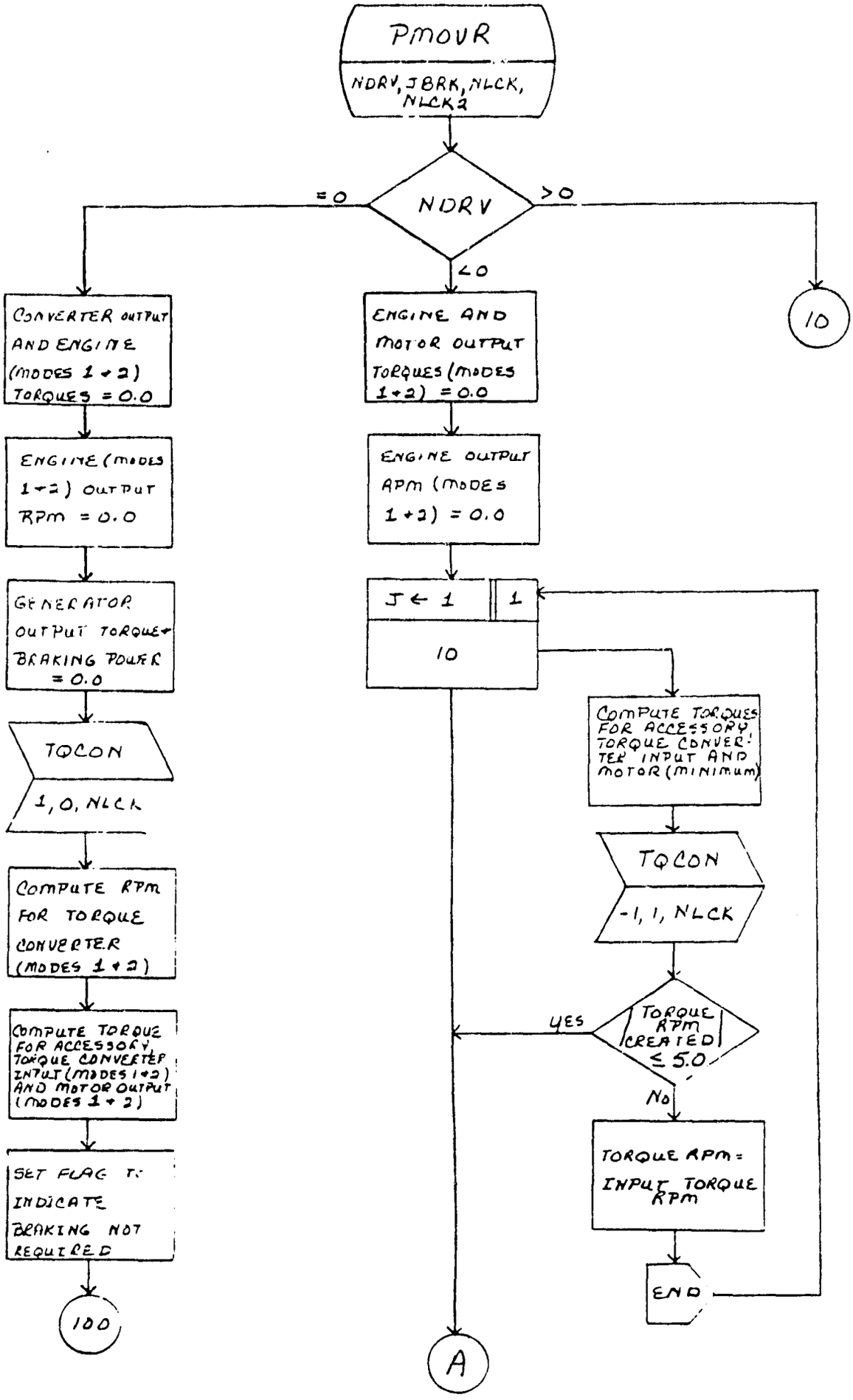
PMOVR
NDRV, JBRK, NLCK, NLCK2
NDRV
=0
>0
<0
10
CONVERTER OUTPUT AND ENGINE (MODES 1+2) TORQUES = 0.0
ENGINE (MODES 1+2) OUTPUT RPM = 0.0
GENERATOR OUTPUT TORQUE+ BRAKING POWER = 0.0
TQCON
1, 0, NLCK
COMPUTE RPM FOR TORQUE CONVERTER (MODES 1+2)
COMPUTE TORQUE FOR ACCESSORY, TORQUE CONVERTER INPUT (MODES 1+2) AND MOTOR OUTPUT (MODES 1+2)
SET FLAG TO INDICATE BRAKING NOT REQUIRED
100
ENGINE AND MOTOR OUTPUT TORQUES (MODES 1+2) = 0.0
ENGINE OUTPUT RPM (MODES 1+2) = 0.0
J ← 1
1
10
COMPUTE TORQUES FOR ACCESSORY, TORQUE CONVERTER INPUT AND MOTOR (MINIMUM)
TQCON
-1, 1, NLCK
TORQUE RPM CREATED ≤ 5.0
YES
NO
TORQUE RPM = INPUT TORQUE RPM
END
A

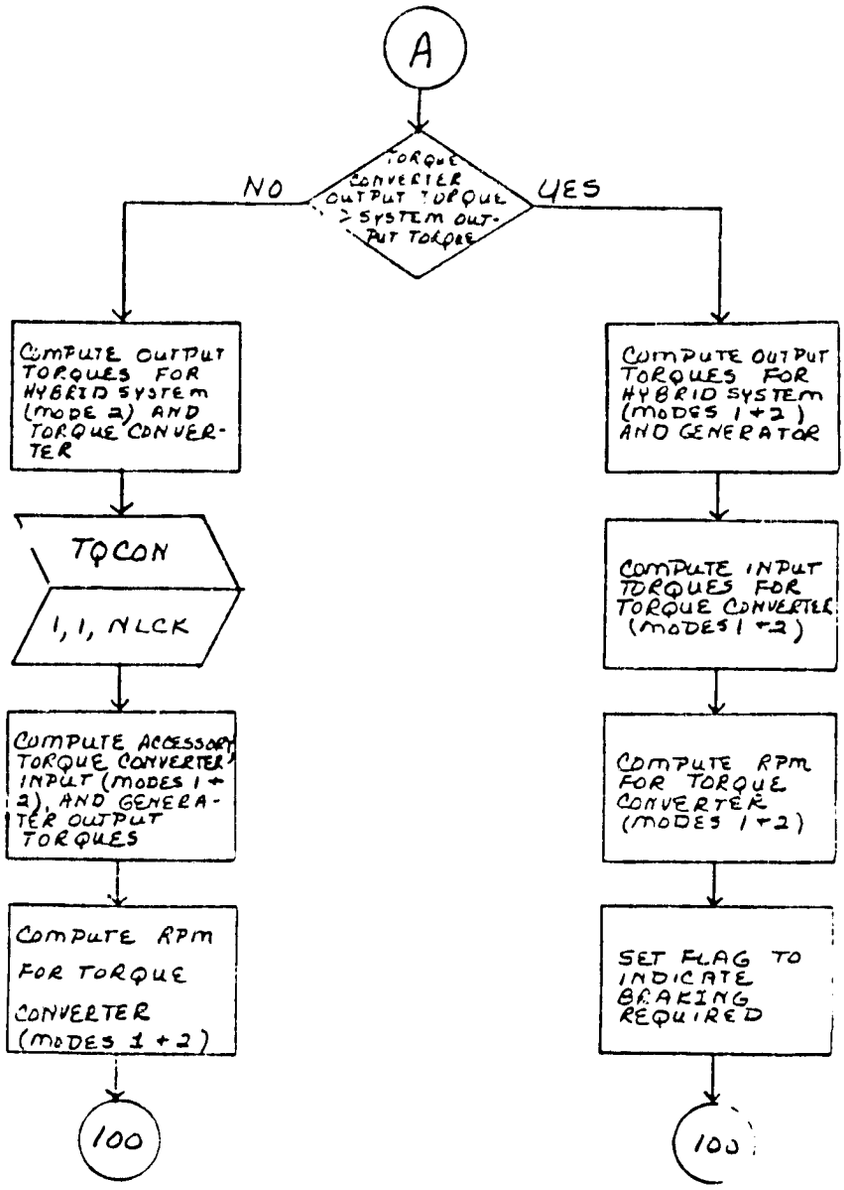
A
TORQUE CONVERTER OUTPUT TORQUE ≥ SYSTEM OUTPUT TORQUE
NO
YES
COMPUTE OUTPUT TORQUES FOR HYBRID SYSTEM (MODE 2) AND TORQUE CONVERTER
TQCON
1, 1, NLCK
COMPUTE ACCESSORY TORQUE CONVERTER INPUT (MODES 1 + 2), AND GENERATOR OUTPUT TORQUES
COMPUTE RPM FOR TORQUE CONVERTER (MODES 1 + 2)
100
COMPUTE OUTPUT TORQUES FOR HYBRID SYSTEM (MODES 1 + 2) AND GENERATOR
COMPUTE INPUT TORQUES FOR TORQUE CONVERTER (MODES 1 + 2)
COMPUTE RPM FOR TORQUE CONVERTER (MODES 1 + 2)
SET FLAG TO INDICATE BRAKING REQUIRED
100

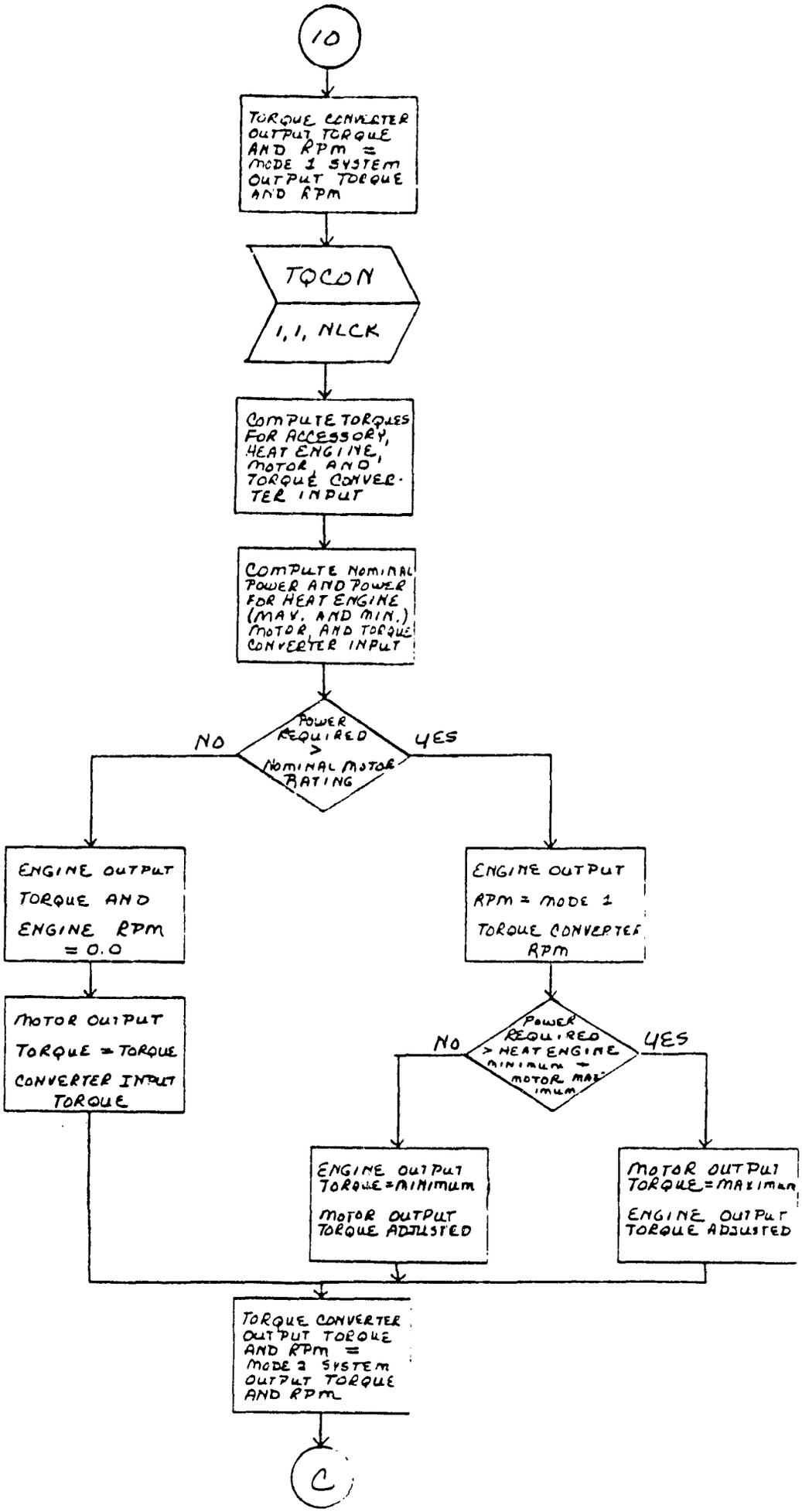
10
TORQUE CONVERTER OUTPUT TORQUE AND RPM = MODE 1 SYSTEM OUTPUT TORQUE AND RPM
TQCDN
1, 1, NLCK
COMPUTE TORQUES FOR ACCESSORY, HEAT ENGINE, MOTOR, AND TORQUE CONVERTER INPUT
COMPUTE NOMINAL POWER AND POWER FOR HEAT ENGINE (MAX. AND MIN.) MOTOR, AND TORQUE CONVERTER INPUT
POWER REQUIRED > NOMINAL MOTOR RATING
NO
YES
ENGINE OUTPUT TORQUE AND ENGINE RPM = 0.0
MOTOR OUTPUT TORQUE = TORQUE CONVERTER INPUT TORQUE
ENGINE OUTPUT RPM = MODE 1 TORQUE CONVERTER RPM
POWER REQUIRED > HEAT ENGINE MINIMUM + MOTOR MAXIMUM
NO
YES
ENGINE OUTPUT TORQUE = MINIMUM
MOTOR OUTPUT TORQUE ADJUSTED
MOTOR OUTPUT TORQUE = MAXIMUM
ENGINE OUTPUT TORQUE ADJUSTED
TORQUE CONVERTER OUTPUT TORQUE AND RPM = MODE 2 SYSTEM OUTPUT TORQUE AND RPM
C

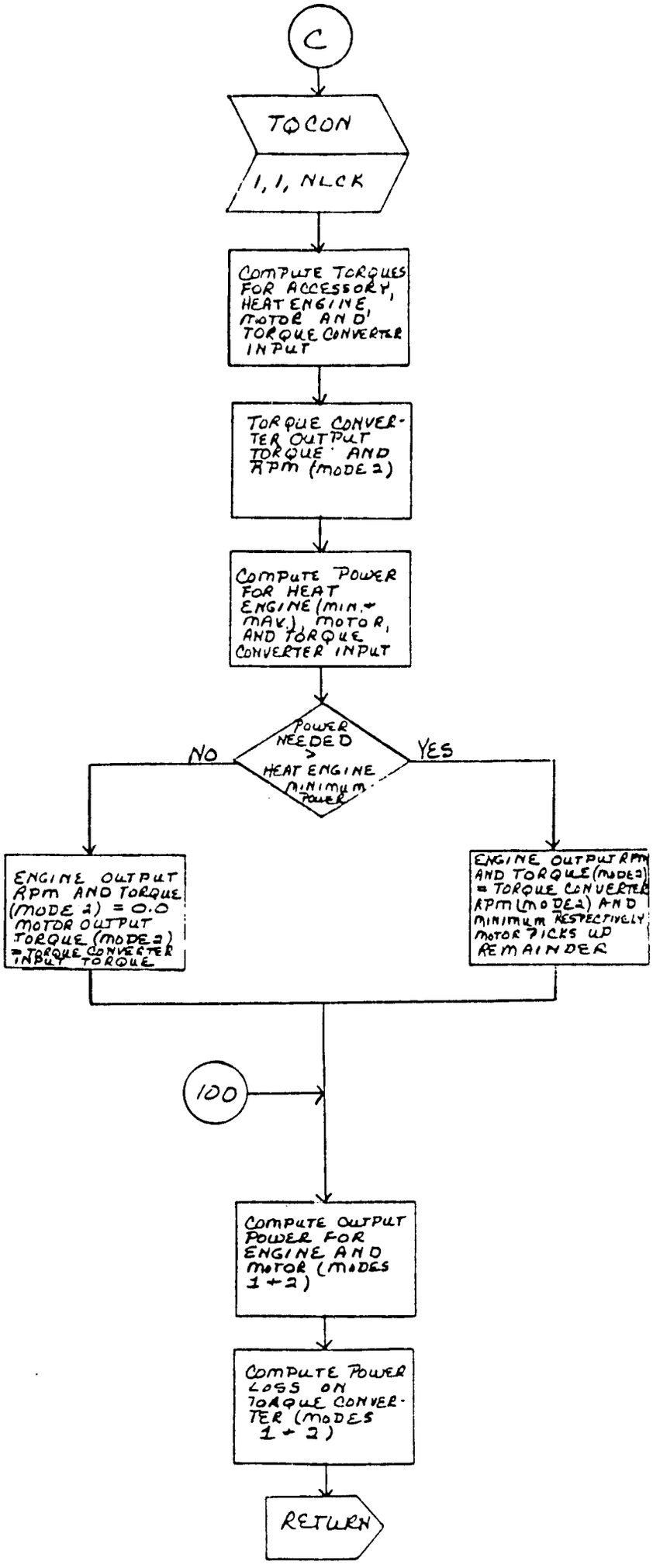
C
TQCON
I, I, NLCK
COMPUTE TORQUES FOR ACCESSORY, HEAT ENGINE, MOTOR AND TORQUE CONVERTER INPUT
TORQUE CONVERTER OUTPUT TORQUE AND RPM (MODE 2)
COMPUTE POWER FOR HEAT ENGINE (MIN. + MAX.), MOTOR, AND TORQUE CONVERTER INPUT
POWER NEEDED > HEAT ENGINE MINIMUM POWER
NO
YES
ENGINE OUTPUT RPM AND TORQUE (MODE 2) = 0.0 MOTOR OUTPUT TORQUE (MODE 2) = TORQUE CONVERTER INPUT TORQUE
ENGINE OUTPUT RPM AND TORQUE (MODE 2) = TORQUE CONVERTER RPM (MODE 2) AND MINIMUM RESPECTIVELY MOTOR PICKS UP REMAINDER
100
COMPUTE OUTPUT POWER FOR ENGINE AND MOTOR (MODES 1 + 2)
COMPUTE POWER LOSS ON TORQUE CONVERTER (MODES 1 + 2)
RETURN

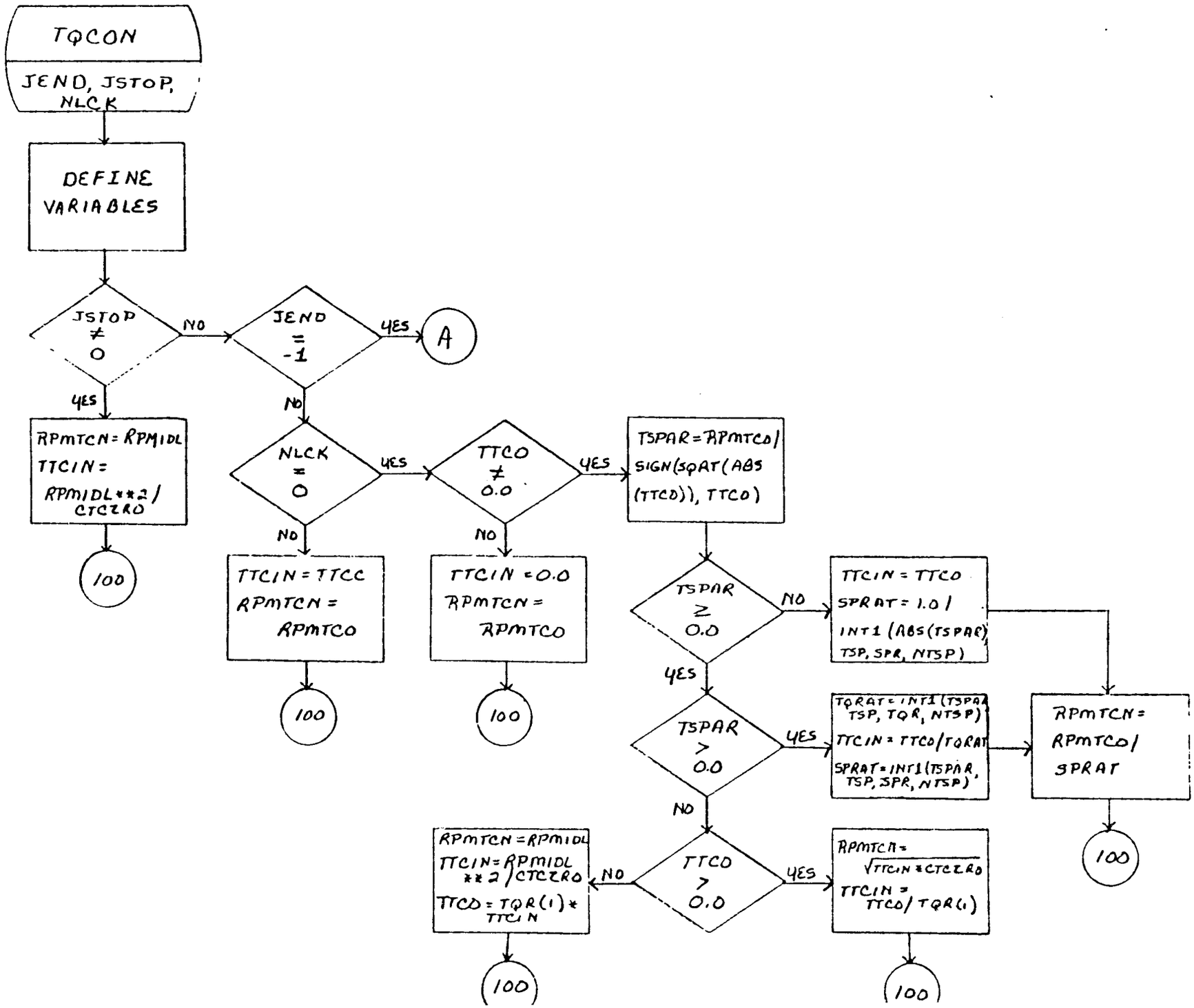
TQCON
JEND, JSTOP, NLCK
DEFINE VARIABLES
JSTOP ≠ 0
NO
YES
RPMTCN = RPMIDL
TTCIN = RPMIDL**2/CTCZRO
100
JEND = -1
YES
A
NO
NLCK = 0
YES
NO
TTCIN = TTCC
RPMTCN = RPMTCO
100
TTCO ≠ 0.0
YES
NO
TTCIN = 0.0
RPMTCN = RPMTCO
100
TSPAR = RPMTCO/SIGN(SQRT(ABS(TTCO)), TTCO)
TSPAR ≥ 0.0
NO
TTCIN = TTCO
SPRAT = 1.0/INT1 (ABS(TSPAR), TSP, SPR, NTSP)
YES
TSPAR > 0.0
YES
TQRAT = INT1 (TSPAR, TSP, TQR, NTSP)
TTCIN = TTCO/TQRAT
SPRAT = INT1(TSPAR, TSP, SPR, NTSP)
RPMTCN = RPMTCO/SPRAT
100
NO
TTCO > 0.0
NO
RPMTCN = RPMIDL
TTCIN = RPMIDL**2/CTCZRO
TTCO = TQR(1)*TTCIN
100
YES
RPMTCN = √TTCIN*CTCZRO
TTCIN = TTCO/TQR(1)
100

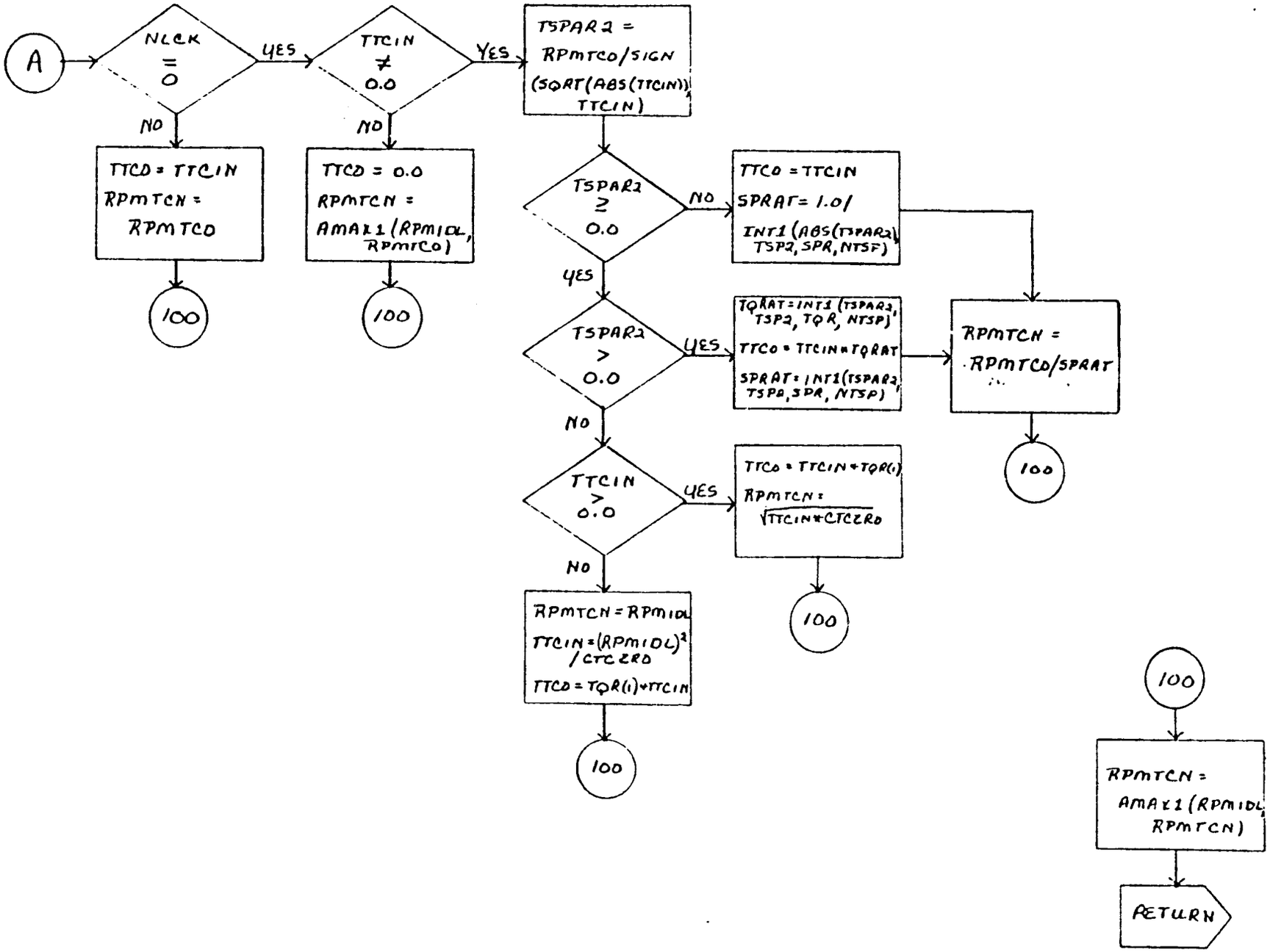
A
NLCK = 0
YES
NO
TTCIN ≠ 0.0
YES
NO
TTCO = TTCIN
RPMTCN = RPMTCO
100
TTCO = 0.0
RPMTCN = AMAX1 (RPMIDL, RPMTCO)
100
TSPAR2 = RPMTCO/SIGN (SQRT(ABS(TTCIN)), TTCIN)
TSPAR2 ≥ 0.0
NO
YES
TTCO = TTCIN
SPRAT = 1.0/ INT1 (ABS(TSPAR2), TSP2, SPR, NTSP)
TSPAR2 > 0.0
YES
NO
TQRAT = INT1 (TSPAR2, TSP2, TQR, NTSP)
TTCO = TTCIN*TQRAT
SPRAT = INT1(TSPAR2, TSP2, SPR, NTSP)
RPMTCN = RPMTCO/SPRAT
100
TTCIN > 0.0
YES
NO
TTCO = TTCIN+TQR(1)
RPMTCN = √(TTCIN*CTCZRO)
100
RPMTCN = RPMIDL
TTCIN = (RPMIDL)² / CTCZRO
TTCO = TQR(1)+TTCIN
100
100
RPMTCN = AMAX1 (RPMIDL, RPMTCN)
RETURN

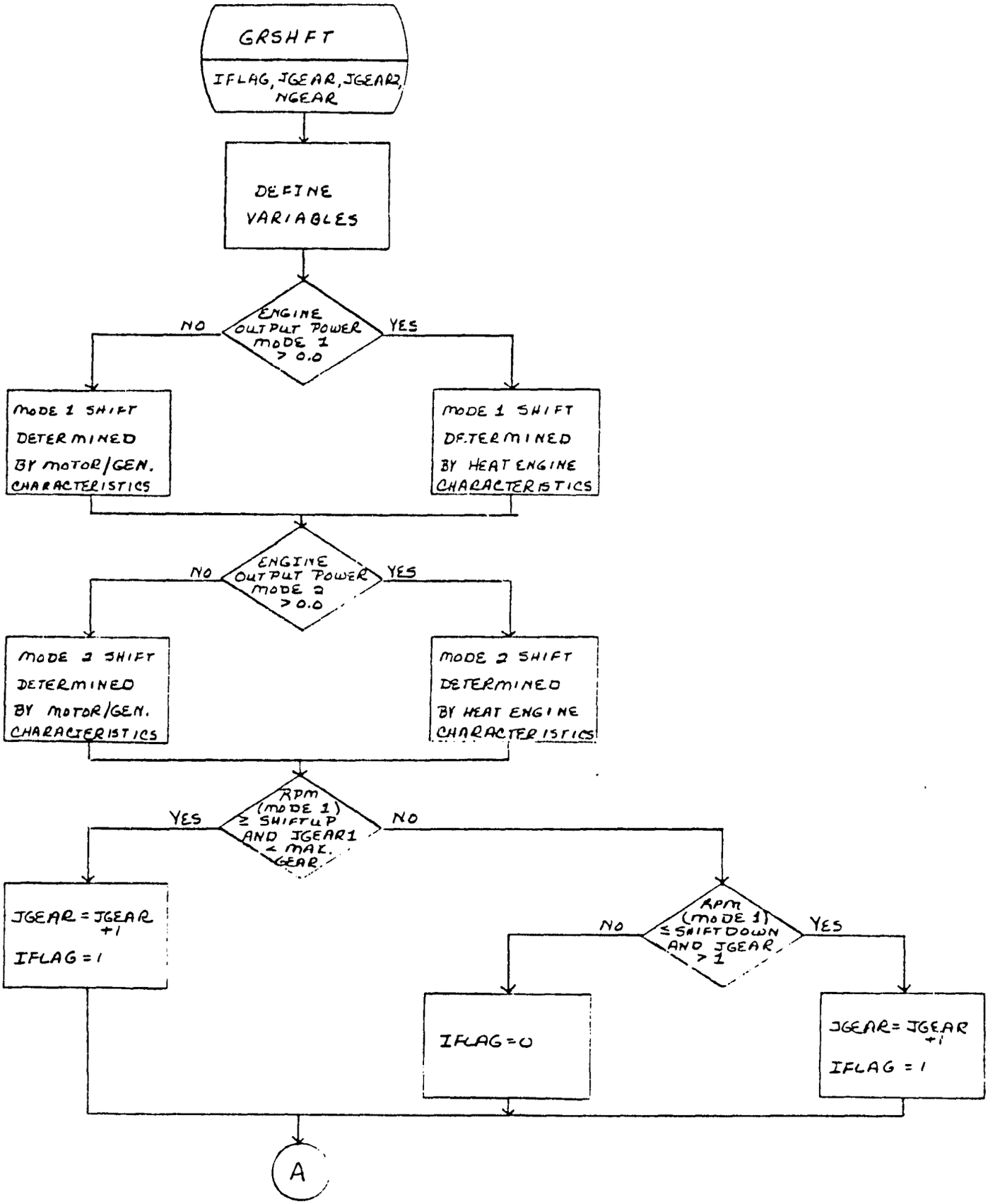
GRSHFT
IFLAG, JGEAR, JGEAR2, NGEAR
DEFINE VARIABLES
ENGINE OUTPUT POWER MODE 1 > 0.0
NO
YES
MODE 1 SHIFT DETERMINED BY MOTOR/GEN. CHARACTERISTICS
MODE 1 SHIFT DETERMINED BY HEAT ENGINE CHARACTERISTICS
ENGINE OUTPUT POWER MODE 2 > 0.0
NO
YES
MODE 2 SHIFT DETERMINED BY MOTOR/GEN. CHARACTERISTICS
MODE 2 SHIFT DETERMINED BY HEAT ENGINE CHARACTERISTICS
RPM (MODE 1) ≥ SHIFTUP AND JGEAR1 < MAX. GEAR
YES
NO
JGEAR = JGEAR +1
IFLAG = 1
RPM (MODE 1) ≤ SHIFTDOWN AND JGEAR > 1
NO
YES
IFLAG = 0
JGEAR = JGEAR +1
IFLAG = 1
A

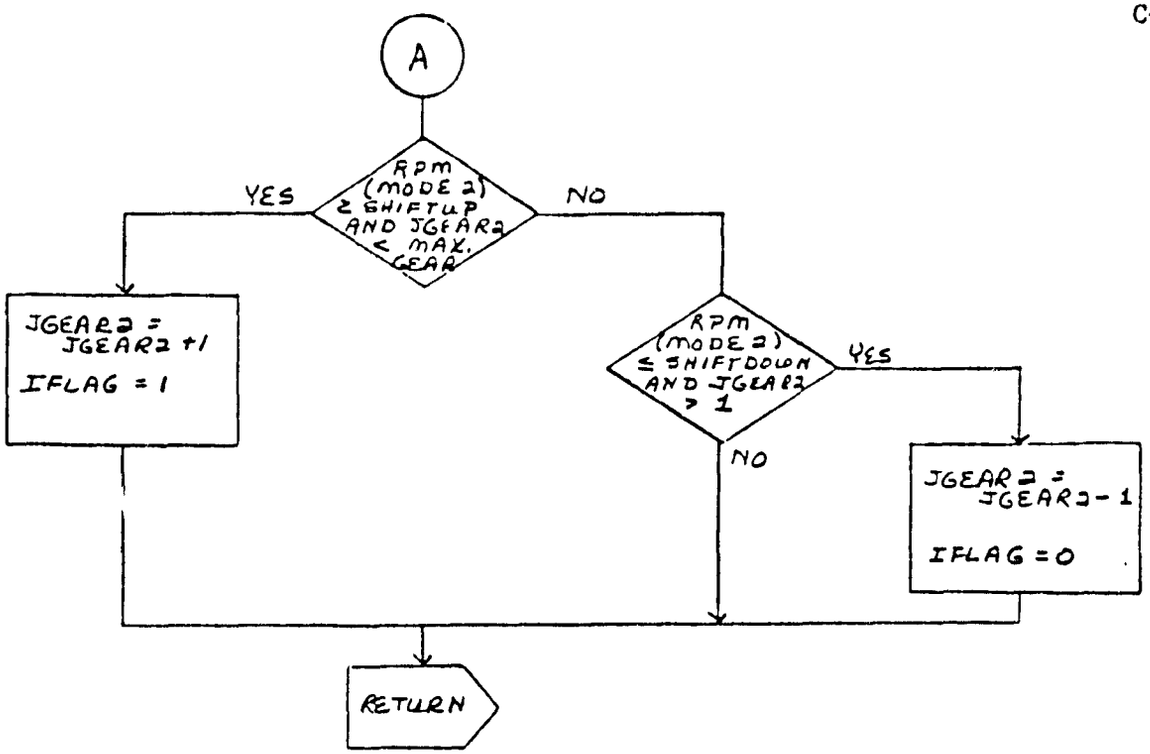
A
RPM (MODE 2) ≥ SHIFTUP AND JGEAR2 < MAX. GEAR
YES
NO
JGEAR2 = JGEAR2 +1
IFLAG = 1
RPM (MODE 2) ≤ SHIFTDOWN AND JGEAR2 > 1
YES
NO
JGEAR2 = JGEAR2 - 1
IFLAG = 0
RETURN

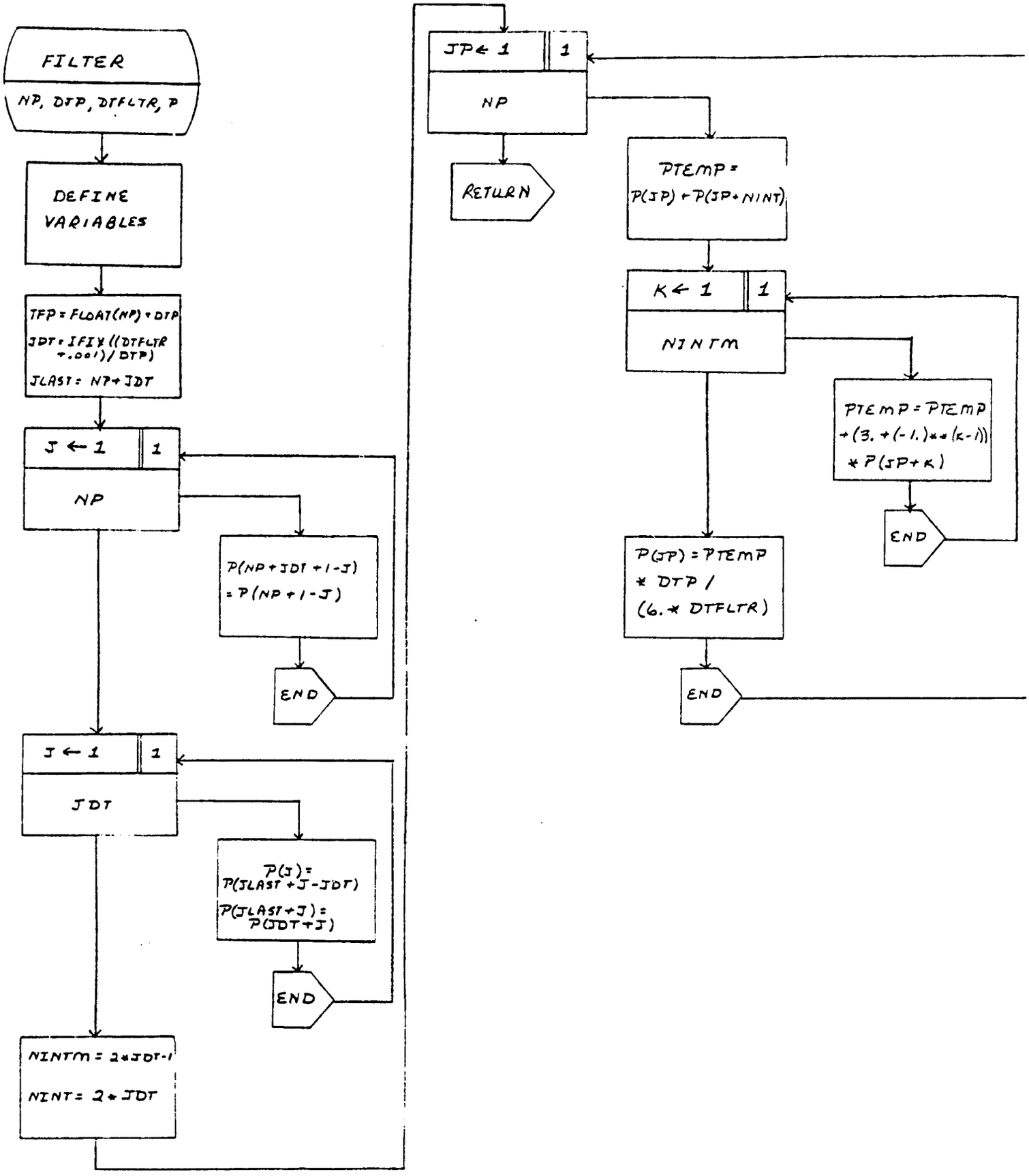
FILTER
NP, DTP, DTFLTR, P
DEFINE VARIABLES
TFP = FLOAT(NP) * DTP
JDT = IFIX((DTFLTR + .001)/DTP)
JLAST = NP + JDT
J ← 1
1
NP
P(NP + JDT + 1 - J) = P(NP + 1 - J)
END
J ← 1
1
JDT
P(J) = P(JLAST + J - JDT)
P(JLAST + J) = P(JDT + J)
END
NINTM = 2 * JDT - 1
NINT = 2 * JDT
JP ← 1
1
NP
RETURN
PTEMP = P(JP) + P(JP + NINT)
K ← 1
1
NINTM
PTEMP = PTEMP + (3. + (-1.) ** (K-1)) * P(JP + K)
END
P(JP) = PTEMP * DTP / (6. * DTFLTR)
END

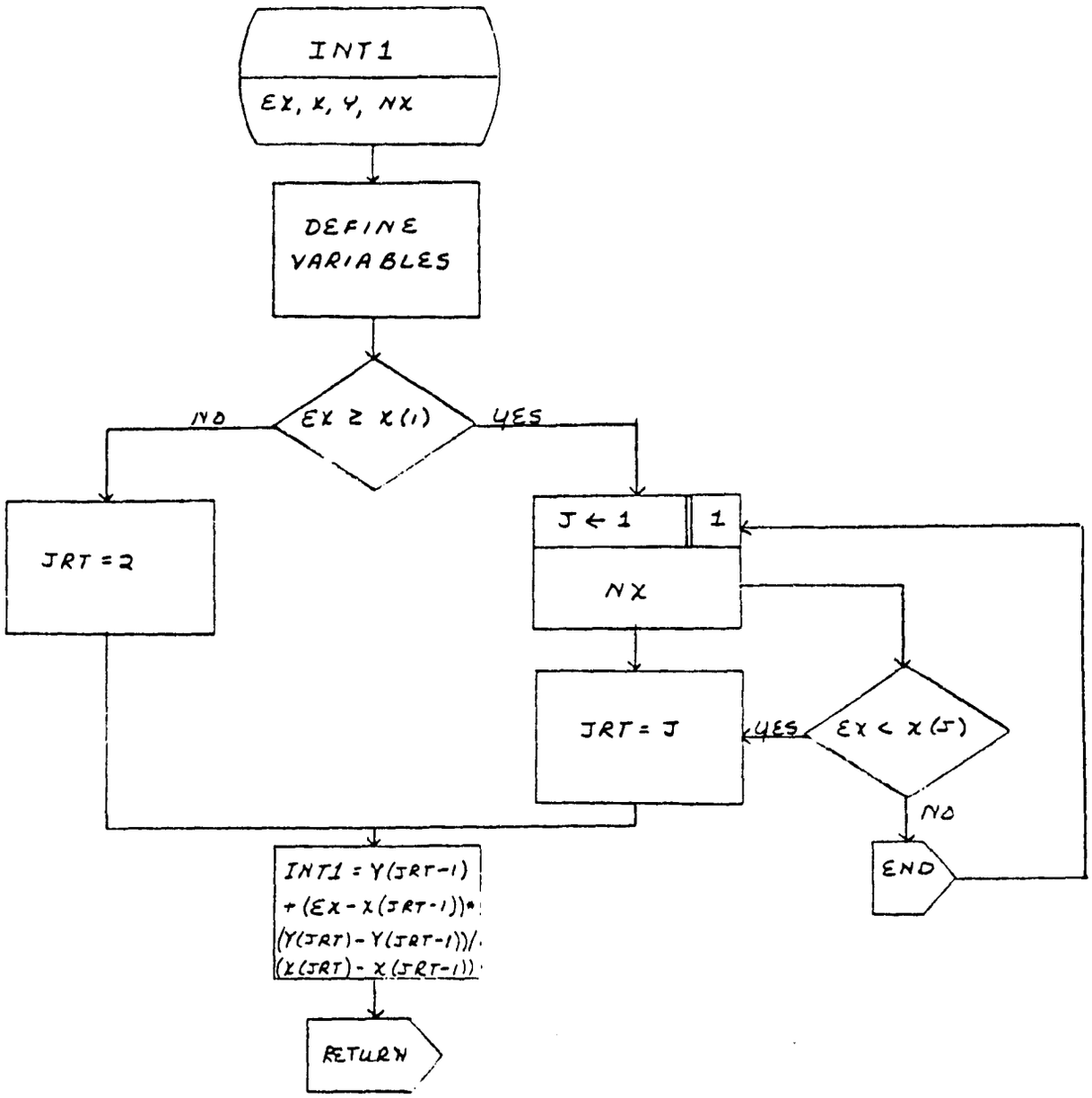
INT1
EX, X, Y, NX
DEFINE VARIABLES
EX ≥ X(1)
NO
YES
JRT = 2
J ← 1
1
NX
JRT = J
YES
EX < X(J)
NO
END
INT1 = Y(JRT-1) + (EX - X(JRT-1))* (Y(JRT) - Y(JRT-1))/ (X(JRT) - X(JRT-1))
RETURN

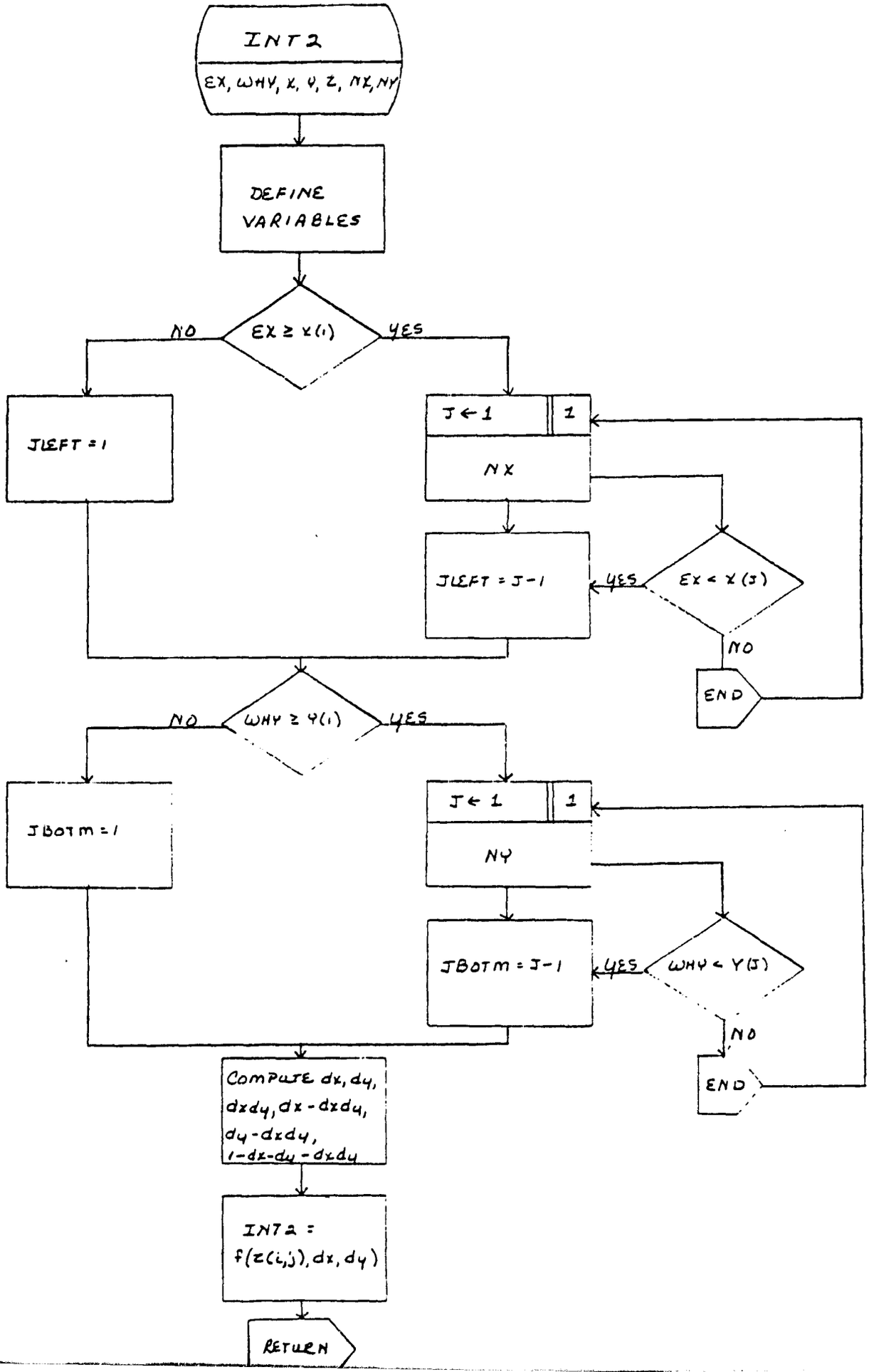
INT2
EX, WHY, X, Y, Z, NX, NY
DEFINE VARIABLES
EX ≥ X(1)
NO
YES
JLEFT = 1
J ← 1
1
NX
JLEFT = J-1
YES
EX < X(J)
NO
END
WHY ≥ Y(1)
NO
YES
JBOTM = 1
J ← 1
1
NY
JBOTM = J-1
YES
WHY < Y(J)
NO
END
COMPUTE dx, dy, dxdy, dx - dxdy, dy - dxdy, 1-dx-dy - dxdy
INT2 = f(z(i,j), dx, dy)
RETURN

GENERAL RESEARCH CORPORATION

FORTRAN CODING FORM

PROGRAM	NAME
HYBRID2	
ROUTINE	DATE / PAGE
MAIN PROGRAM	1 OF 1

TYPE	STATEMENT NO.	CONT	FORTRAN STATEMENT (0 : ZERO, 0 : ALPHA 0; 1 = ONE, 1 = ALPHA 1; 2 = TWO, 2 = ALPHA 2)	SERIAL NUMBER
			CASE DATA:	
		T	E0IMØ TEODEL RPMØ TEOMN2 DBMAX PEOMIN VMAX	
	D	T	FLTR	

FORM NO. GRC 109 Rt V. 1

GENERAL RESEARCH CORPORATION

FORTRAN CODING FORM

PROGRAM: HYBRID2

ROUTINE: HYREAD

NAME:

DATE:

TYPE	STATEMENT NO.	CONT	FORTRAN STATEMENT (0 = ZERO, O = ALPHA O; 1 = ONE, I = ALPHA I; 2 = TWO, Z = ALPHA Z)							SERIAL NUMBER
			ENGINE DATA							
		NRPM	NMEP	FUELSG	DISPL	SKALE				
		I	BMEP							
*			IF(IBMEP.NE.Ø)							
	BMEP(1)		...	BMEP(NMEP)						
	NMEPO(1)		RPM(1)	TQMAX(1)						
	BMEPO(1,1)		BSFCO(1,1)	...	BMEPO(1,NMEPO(1))	BSFCO(1,NMEPO(1))				
					...					
	NMEPO(NRPM)		RPM(NRPM)	TQMAX(NRPM)						
	BMEPO(NRPM,1)		BSFCO(NRPM,1)	...	BMEPO(NRPM,NMEPO(NRPM))		BSFCO(NRPM,NMEPO(NRPM))			
*			IF(IBMEP.EQ.Ø)							
	RPM(1)		TQMAX(1)	...	RPM(NRPM)	TQMAX(NRPM)	BMEP(1)	...		
	BMEP(NMEP)		BSFC(1,1)	...	BSFC(NRPM,NMEP)					
		NOP	RPMBST	PBEST						
	PEOP(1)		RPMEOP(1)	...	PEOP(NOP)	RPMEOP(NOP)				
			MOTOR/GENERATOR							
		NSPMO	EMUM	EMUMM	TMSKL	PINNLD	RPMIDL	RPMOPM		
	PBREAK									
	SPMO(1)		TMOMAX(1)	TMOMIN(1)	...	SPMO(NSPMO)	TMOMAX(NSPMO)	TMOMIN(NSPMO)		

GENERAL RESEARCH CORPORATION

FORTRAN CODING FORM

PROGRAM: HYBRID2

NAME:

ROUTINE: HYREAD

DATE:

FORTRAN STATEMENT

0 = ZERO, 0 = ALPHA 0 | 1 = ONE, 1 = ALPHA 1 | 2 = TWO, 2 = ALPHA 2

STATEMENT NO.	CONT								SERIAL NUMBER
		CONTINUOUSLY VARIABLE TRANSMISSION DATA							
EMUCVT		RATUP	RATDN						
		TORQUE CONVERTOR DATA							
	NTSP								
CTCZRO		TSP(1)	TQR(1)	SPR(1)	...	TSP(NTSP)	TQR(NTSP)		
SPR(NTSP)									
		TRANSMISSION DATA							
	NGEAR	NTH	UPSEL	DNSEL					
NLOCK(1)		TRATIO(1)	CT1(1)	CT2(1)	EMUT(1)	...	NLOCK(NGEAR)		
TRATIO(NGEAR)		CT1(NGEAR)	CT2(NGEAR)	EMUT(NGEAR)					
		BATTERY DATA							
NDDSCH		NDENS	WB	EBMAX	EMURG	EMURG2	CHGEFF		
DDISCH(1)		CYCLES(1)	...	DDISCH(NDDSCH)	CYCLES(NDDSCH)				
PDENS(1)		EDENS(1)	...	PDENS(NDENS)	EDENS(NDENS)				
		DIFFERENTIAL AND TIRE DATA							
DRATIO		CD1	CD2	EMUD	RTIRE	CTIRE1	CTIRE2		

GENERAL RESEARCH CORPORATION

FORTRAN CODING FORM

PROGRAM: HYBRID2

ROUTINE: HYREAD

NAME:

DATE:

STATEMENT NO.	CONT	FORTRAN STATEMENT (0 = ZERO, O = ALPHA O; 1 = ONE, I = ALPHA I; 2 = TWO, Z = ALPHA Z)	SERIAL NUMBER
		ACCESSORY DATA	
		NAX	
RPMAX(1)		TAX(1) ... RPMAX(NAX) TAX(NAX)	
		VEHICLE DATA	
	V	MASS DLI CDA	
		DRIVING CYCLE DATA	
NCYCLE			
NTC(1)		NPRTC(1) NUNITS DTC(1) TFC(1)	
TIME(1,1)		SPEDC(1,1) ... TIME(1, NTC(1)) SPEDC(1, NTC(1))	
		...	
TC(NCYCLE)		NPRTC(NCYCLE) NUNITS DTC(NCYCLE) TFC(NCYCLE)	
IME(NCYCLE,1)		SPEDC(NCYCLE,1) ... TIME(NCYCLE, NTC(NCYCLE)) SPEDC(NCYCLE, NTC(NCYCLE))	
	NCOMP	DSTAV DWARM	
DSUP(1)		DNC(1) (GAMMA(1,1) ... GAMMA(1,NCYCLE)) ... DSUP(NCOMP)	
NC(NCOMP)		(GAMMA(NCOMP,1) ... (GAMMA(NCOMP,NCYCLE))	

GOLETA FORTRAN 1.3 * SEMI-AUTO REL * (01-10-73)

```
                PROGRAM HYBRID2
          C
          C     HYBRID2 MODELS OPERATION OF HYBRID VEHICLE OVER SPECIFIED DRIVI
          C     CYCLES.
          C
          C     DATA IN COMMON -
000003          COMMON DISPL,RPM(20),TQMAX(20),BMEP(20),BSFC(20,20),NRPM,NMEP,
               1EMUM,EMUG,FINALD,SPMO(20),TMOMAX(20),TMOMIN(20),NSPMO,
               2OTCZPO,TSF(20),TQR(20),SFR(20),TSP2(20),NTSP,
               3NLOCK(5),TRATIO(5),OT1(5),OT2(5),EMUT(5),
               4WB,EBMAX,EMURG,EMURG2,
               5DRATIO,CD1,CD2,EMUD,RTIRE,CTIRE1,CTIRE2,VMASS,DLI,CDA,
               6TEOMIN,DBMAX,RPMIDL,VMASS2,REOMIN,
               7FUELSG,SKALE,TMSKL,NTP,NDOSCH ,CHGEFF,NCYCLE,NCOMP,DSTAV,
               8NUNITS,THSET(5),UPSHFT(5),DNSHFT(5),DDISCH(20),CYCLES(20),NTC(3
               9NPRTC(3),CTC(3),TFC(3),DSUP(30),DNC(30),DBAR(30)
               1,RPMBST,PBEST,BEOP(20),RPMEOP(20),RPMOPM,EMUCVT,RATUP,RATDN,NOP
               2,PCENS(20),ECENS(20),NCENS
               3,VMAX,TEOMN2,UPSEL,DNSEL,DWARM,NAX,RPMAX(20),TAX(20)
000003          COMMON TIMC(3,200),SPEDC(3,200),GAMMA(30,3)
          C
          C     VARIABLES IN COMMON -
000003          COMMON FA,FR,FAC,FMET,TCC,TTC,RPMDO,RPMTO,TSO,RPMSO,RPMTCO,TTCO
               1RPMTCN,TMC,TEC,TMC2,TEC2,TGC,PSC,PEO,PEO2,PMC,PMO2,PGO,PERK,FC,
               2PD,PT,PRW,PLTC,THRPC,TTCIN
               3,RPMEO,RPMEC2,PLTC2,VMPS
               4,TSO2,RPMSO2,PSC2,RPMTC1,RPMTC2,RPMEP,RPMEP2
          C
000003          REAL YDOT(20),Y(20),INT1,INT2,V(6),A(3),YTMP(20)
000003          REAL EK(80)
000003          REAL DIST(3),FCONS(3),FCONS2(3),ECONS(3),ECONS2(3)
000003          REAL FCBAR(30),SFBAC(30),TIME(200),SPEED(200),
               1FCBAR2(30),ECBAR(30),ECBAR2(30),RANGE(30),FCMAV(30),ECMAV(30)
000003          REAL ECHF(3),ECSYS(3),EHEBAR(30),ESYSBR(30)
000003          REAL VAVG(3)
000003          REAL VBAR(25),SPBWR(25),SPENG(25)
000003          REAL BMOT(2800),ERG(2800),DEFL(3),BDBAR(30)
000003          INTEGER IBP(20)
          C
000003          CALL HYREAD(NCBAR)
          C
          C     INPUT RUN DATA
          C
000005          READ 600,NCASE
000013          DO 194 JCASE=1,NCASE
000015          PRINT 925,JCASE
000022          READ 610,TEOMIN,TEOMN2,DBMAX,REOMIN,VMAX
000040          PRINT 930,TEOMIN,TEOMN2,DBMAX,REOMIN,VMAX
000056          VMAX=VMAX/3.6
000060          READ 610,CTFLTP
000065          DO 190 JCYC=1,NCYCLE
000067          PRINT 700
000072          NTIME=NTC(JCYC)
000074          NPRNT=NPRTC(JCYC)
000076          DELT=DTC(JCYC)
```

ORIGINAL PAGE IS
OF POOR QUALITY

```
000077          TF=TFC(JCYC)
000101          MCT=IFIX(TF/DELT+2.*(DTFLTR/1.0)+1.)
   106          DO 47 J=1,NTIME
000110          TIME(J)=TIMC(JCYC,J)
000114          SPEED(J)=SPEEC(JCYC,J)
000117       47 CONTINUE
000121          DO 48 J=1,MCT
000122          PMOT(J)=0.0
000123       48 CONTINUE
          C
          C     INITIALIZE VARIABLES OF INTEGRATION
          C
000125          DO 50 J=1,20
000127          Y(J)=0.0
000130          IBP(J)=0
000131       50 CONTINUE
000133          T=0.0
000134          ITIBP=0
000135          K=NPRNT
000136          JGEAR=1
000137          JGEAR2=1
000140          NTM=0
          C
          C     COMPUTE VELOCITY AND ACCELERATION
          C
000141          V(1)=0.0
   142          V(3)=SPEED(1)
000143          V(4)=INT1(DELT/2.,TIME,SPEED,NTIME)
000151          V(5)=INT1(DELT,TIME,SPEED,NTIME)
000155          V(6)=INT1(3.*DELT/2.,TIME,SPEED,NTIME)
000163          V(2)=V(3)+V(3)-V(4)
000165          GO TO 70
000166       60 V(1)=V(3)
000170          V(3)=Y(11)
000171          V(2)=(V(1)+V(3))/2.
000174          V(4)=V(6)
000175          V(5)=INT1(T+DELT,TIME,SPEED,NTIME)
000203          V(6)=INT1(T+3.*DELT/2.,TIME,SPEED,NTIME)
000213       70 A(1)=(V(4)-V(2))/(3.6*DELT)
000217          A(1)=AMIN1(A(1),9.8)
000222          A(2)=(V(5)-V(3))/(3.6*DELT)
000226          A(2)=AMIN1(A(2),9.8)
          C
          C     COMPUTE VEHICLE OPERATING CONDITIONS AT MAJOR TIME POINT
          C
000231          IFLAG=0
000232       80 CALL VEHIC(V(3),A(1),T,YDOT,Y,JGEAR,JGEAR2)
000241          NTM=NTM+1
000243          IF(PMO.GE.0.)PMOT(NTM)=PMO/EMUM+PINNLD
000247          IF(PGO.NE.0.0)PMOT(NTM)=PGO*EMUM+PINNLD
000254          IF(IFLAG.EQ.1)GO TO 93
   256          CALL GESHFT(IFLAG,JGEAR,JGEAR2,NGEAR)
000261          IF(IFLAG.EQ.1)GO TO 80
000263       93 BPI=YDOT(18)*1000.
000265          ABPI=ABS(BPI)
```

```
000267          DO  94 J=1,20,2
 0270           JTH=J
 0271           IF(ABPI.GT.2*J-4.AND.ABPI.LE.2*J)GO TO 95
000310       94 CONTINUE
000312       95 IF(BPI+2.0.GT.0.0)GO TO 96
000316          IBP(JTH+1)=IBP(JTH+1)+1
000320          GO TO 97
000321       96 IBP(JTH)=IBP(JTH)+1
000324       97 CONTINUE
000324          DO  98 JV=1,19
000326          EK(JV)=YDOT(JV)
000330       98 CONTINUE
          C
          C     TIME TO PRINT RESULTS -
          C
000332          IF(T.EQ.TF)GO TO 100
000334          K=K+1
000335          IF(K.LT.NPRNT)GO TO 110
000337          K=0
000340      100 EKIN=VMASS2*VMPS**2/2.
000343          EB=Y(18)
000345          EB2=Y(19)
000346          JG=JGEAR
000350          JG2=JGEAR2
000351          PRINT 710,T,Y(11),Y(12),FBW,FBRK,Y(1),Y(4),EKIN,
               1JG,RPMTO1,Y(2),Y(5),Y(7),Y(9),Y(13),Y(18),FSO,PEO,PMO,PGO,
               2JG2,RPMTO2,Y(3),Y(6),Y(8),Y(10),Y(19),FSO2,PEO2,PMO2
000451          IF(T.LT.TF)GO TO 110
000454          DIST(JCYC)=Y(12)
000456          DO 101 J=1,NTM
000457          PMOT(J)=PMOT(J)*1000.
000461      101 CONTINUE
000463          CALL FILTER(NTM,0.5,DTFLTR,PMOT)
000466          DO 102 J=1,NTM
000470          IF(PMOT(J).LT.0.0)GO TO 105
000472          ERG(J)=INT1(PMOT(J)/WB,FDENS,EDENS,NDENS)
000502          ERG(J)=ERG(J)*WB
000504          GO TO 102
000505      105 ERG(J)=WB*FEMAX/EMUPG
000511      102 CONTINUE
000514          DEPL(JCYC)=2.*PMOT(1)/ERG(1)
000517          NTMS=NTM-1
000521          DO 106 J=1,NTMS
000522          DEPL(JCYC)=DEPL(JCYC)+(3.+(-1.)**(J-1))*PMOT(J+1)/ERG(J+1)
000534      106 CONTINUE
000537          DEPL(JCYC)=DEPL(JCYC)/(3.*3600.)
000541          DEPL(JCYC)=DEPL(JCYC)/DIST(JCYC)
000543          VAVG(JCYC)=DIST(JCYC)*3600./TF
000546          FCONS(JCYC)=Y(16)/Y(12)
000550          ECONS(JCYC)=EB/(3.6*Y(12))
 0553           FCONS2(JCYC)=Y(17)/Y(12)
 0555           ECONS2(JCYC)=EB2/(3.6*Y(12))
000557          SCPE(JCYC)=Y(8)/Y(12)
000561          ECSYS(JCYC)=(Y(6)+Y(8))/Y(12)
000564          PRINT 840,Y(12),FCONS(JCYC),FCONS2(JCYC),ECONS(JCYC),ECONS2(JC
```

```
000601          PRINT 945,VAVG(JCYC),DFFL(JCYC),Y(14),Y(15)
000615          DO 108 J=1,19
000617          ITIBP=ITIBP+IBP(J)
000621      108 CONTINUE
000623          PRINT 1020,IBP(18),IBP(16),IBP(14),IBP(12),IBP(10),IBP(8),IBP(
               1IBP(4),IBP(2),(IBP(J),J=1,19,2),ITIBP
000660          DO 109 J=1,19
000662          IBP(J)=0
000663      109 CONTINUE
000665          ITIBP=0
000666          IF(T.GE.TF)GO TO 190
          C
          C     INTEGRATE TO NEXT TIME STEP
          C
000670      110 TTMP=T
000672          DO 170 JV=1,3
000673          JA=MAX0(2,JV)
000676          IF(JV.EQ.2)GO TO 121
000677          TTMP=TTMP+DELT/2.
000702      121 DT=TTMP-T
000704          IF(JV.NE.3)GO TO 122
000706          A(3)=(V(6)-(VTMP+VTMPL)/2.)/(3.6*DELT)
000715          A(3)=AMIN1(A(3),9.8)
000720      122 VTMPL=VTMP
000722          VTMP=Y(11)+EK(11+(JV-1)*19)*DT
000731          IFLAG=0
000732      130 CALL VEHIC(VTMP,A(JA),TTMP,YDOT,Y,JGEAR,JGEAR2)
000743          IF(IFLAG.EQ.1)GO TO 160
000745          CALL GRSHFT(IFLAG,JGEAR,JGEAR2,NGEAR)
000750          IF(IFLAG.EQ.1)GO TO 130
000752      160 DO 170 JK=1,19
000754          EK(JK+19*JV)=YDOT(JK)
000761      170 CONTINUE
000765          DO 180 JK=1,19
000766          Y(JK)=Y(JK)+DELT*(EK(JK)+2.*(EK(JK+19)+EK(JK+39))+EK(JK+57))/6
000777      180 CONTINUE
001001          T=T+DELT
001002          GO TO 90
001003      190 CONTINUE
001006          FCAV=0.0
001007          ECAV=0.0
001010          EHEAV=0.0
001011          ESYSAV=0.0
001012          DO 300 JC=1,NCOMP
          C
          C     COMPUTE FUEL AND ENERGY CONSUMPTION ON COMPOSITE DRIVING CYCLE
          C     FOR MODES1 AND 2.
          C
001013          BDBAR(JC)=0.0
001014          FCBAR(JC)=0.0
001015          FCBAR2(JC)=0.0
001016          ECBAR(JC)=0.0
001017          ECBAR2(JC)=0.0
001020          EHSBAR(JC)=0.0
001021          ESYSBR(JC)=0.0
```

ORIGINAL PAGE IS
OF POOR QUALITY

```
001022          VRECIP=0.0
001023          DO 260 KC=1,NCYCLE
   025          VRECIP=VRECIP+GAMMA(JC,KC)/VAVG(KC)
001033          RDBAR(JC)=RDBAR(JC)+GAMMA(JC,KC)*DEPL(KC)
001040          FCBAR(JC)=FCBAR(JC)+GAMMA(JC,KC)*FCONS(KC)
001045          FCBAR2(JC)=FCBAR2(JC)+GAMMA(JC,KC)*FCONS2(KC)
001053          ECBAR(JC)=ECBAR(JC)+GAMMA(JC,KC)*ECONS(KC)
001060          ECBAR2(JC)=ECBAR2(JC)+GAMMA(JC,KC)*ECONS2(KC)
001066          EHEBAR(JC)=EHEBAR(JC)+GAMMA(JC,KC)*ECHE(KC)
001073          ESYSBR(JC)=ESYSBR(JC)+GAMMA(JC,KC)*ECSYS(KC)
001101      260 CONTINUE
001103          VBAR(JC)=1./VRECIP
001106          SPPWR(JC)=1000.*ECBAR(JC)*VBAR(JC)/WB
          C
          C     CORRECT FUEL CONSUMPTION FOR NON-ZERO ENERGY CONSUMPTION ON MO
          C
001112          FCBAR2(JC)=(FCBAR2(JC)*ECBAR(JC)-FCBAR(JC)*ECBAR2(JC))/(ECBAR(
               1-ECBAR2(JC))
          C
          C     COMPUTE RANGE FOR NEW BATTERY DISCHARGE LIMIT
          C
001120          RANGE(JC)=DPMAX/RDBAR(JC)
          C
          C      COMPUTE FRACTION OF TOTAL DRIVING DONE ON MODE 1 FOR EACH
          C     COMPOSITE CYCLE.
          C
  123           IF(JC.NE.1)GO TO 265
  125           DLOW=0.
001126          GO TO 266
001126      265 DLOW=DSUP(JC-1)
001130      266 IF(DWARM.LE.DSUP(JC))GO TO 267
001134          RFRAC(JC)=0.
001135          GO TO 280
001135      267 IF(RANGE(JC).GT.DLOW-DWARM)GO TO 270
001143          RFRAC(JC)=RANGE(JC)/DRAP(JC)
001145          GO TO 280
001146      270 IF(RANGE(JC).GT.DSUP(JC)-DWARM)GO TO 275
001154          RFRAC(JC)=(RANGE(JC)/DRAP(JC))*(1.-(RANGE(JC)-DLOW+DWARM)**2/
               1(2.*RANGE(JC)*(DSUP(JC)-DLOW)))
001170          GO TO 280
001171      275 RFRAC(JC)=1.-DWARM/DRAP(JC)
001175      280 CONTINUE
          C
          C     COMPUTE MODE-AVERAGED FUEL AND ENERGY CONSUMPTION FOR COMPOSITE
          C     DRIVING CYCLE.
          C
001175          FCMAV(JC)=RFRAC(JC)*FCBAR(JC)+ (1.-RFRAC(JC))*FCBAR2(JC)
001203          ECMAV(JC)=RFRAC(JC)*ECBAR(JC)+(1.-RFRAC(JC))*ECBAR2(JC)
          C
          C     COMPUTE OVERALL FUEL AND ENERGY CONSUMPTION.
          C
   210          FCAV=FCAV+DNC(JC)*FCMAV(JC)
001214          ECAV=ECAV+DNC(JC)*ECMAV(JC)
001217          EHEAV=EHEAV+DNC(JC)*EHEBAR(JC)
001223          ESYSAV=ESYSAV+DNC(JC)*ESYSBR(JC)
```

```
001226          FEAV=1000.*FUELSG/FCAV
 231            WPAV=ECAV/CHGEFF
 233        300 CONTINUE
        C
001235          HEEF=EHEAV/ESYSAV
        C       ESTIMATE BATTERY LIFE.
        C
001237          DDAV=DBMAX
001241          BLIFE=DSTAV*INT1(DDAV,DDISCH,CYCLES,NDDSCH)
001246          PPRINT 950
001251          PRINT 960,(FCBAR(J),FCBAR2(J),ECBAR(J),RANGE(J),FCMAV(J),ECMAV(
               1VBAR(J),SFPWR(J),J=1,NCCMP)
001302          PRINT 970,FCAV,ECAV,BLIFE
001314          PRINT 975,FEAV,WPAV
001324          PRINT 1010,HEEF
001332      194 CONTINUE
001335      200 STOP
        C       FORMAT STATEMENTS
        C
001337      600 FORMAT(I10,6F10.4)
001337      610 FORMAT(7F10.4)
001337      700 FORMAT(1H0,4X,4HTIME,8X,5HSPEED,5X,8HDISTANCE,4X,9HR.L.POWER,3X
               18HBR.POWER,3X,10HR.L.ENERGY,3X,9HBR.ENERGY,2X,10HKIN.ENERGY/
               21X,2HGN,2X,3HRPM,1X,10HD.T.ENERGY,2X,10HSYS.ENERGY,2X,10HENG.EN
               3Y,4X,                                                          1
               3OTOR SHAFT ENERGY,4X,10HBAT.ENERGY,3X,9HSYS.POWER,3X,9HENG.POWE
               45X,17HMOTOR SHAFT POWER)
001337      710 FORMAT(1H0,2E12.4/I2,F6.0,10E12.4/I2,F6.0,4E12.4,12X,4E12.4)
001337      820 FORMAT(1H ,2E16.6)
001337      925 FORMAT(1H1,27HCONTROL PARAMETERS FOR CASE,I2)
001337      930 FORMAT(1H0,5X,20HMIN. ENGINE TORQUE =,E11.4,9H (MODE 1)
               1/25X,E11.4,9H (MODE 2)/6X,20HBATT. DISCH. LIMIT =,E11.4
               2/6X,21HNOMINAL MOTOR POWER =,E11.4
               3/6X,18HTRANSITION SPEED =,E11.4)
001337      950 FORMAT(1H0,47HFUEL AND ENERGY CONSUMPTION ON COMPOSITE CYCLES/3
               113HFUEL - MODE 1,3X,13HFUEL - MODE 2,2X,15HENERGY - MODE 1,1X,
               214HRANGE - MODE 1,4X,10HFUEL - AV.,5X,12HENERGY - AV.,6X,9HAV.
               3FD,5X,13HSP. POWER - 1)
001337      960 FORMAT(1H ,8E16.6)
001337      970 FORMAT(1H0,29HYEARLY AV. FUEL CONSUMPTION =,E16.6/1X,34HYEARLY
               1 BATTERY ENERGY OUTPUT =,E16.6/1X,23HEXPECTED BATTERY LIFE =,E1
               2)
001337      975 FORMAT(1H0,25HYEARLY AV. FUEL ECONOMY =,E16.6/1X,
               129HYEARLY AV. WALL PLUG OUTPUT =,E16.6)
001337      940 FORMAT(1H0,16HCYCLE DISTANCE =,E12.4/1X,28HFUEL CONSUMPTION ON
               1E 1 =,E12.4/21X,8HMODE 2 =,E12.4/1X,36HBATT. ENERGY CONSUMPTIO
               2 MODE 1 =,E12.4/29X,8HMODE 2 =,E12.4)
001337     1010 FORMAT(1H0,29HHEAT ENGINE ENERGY FRACTION =,E16.6)
001337      945 FORMAT(1H ,15HAVERAGE SPEED =,E12.4,1X,19HBATTERY DEPLETION =,E
               16,1X,21HHEAT ENGINE ON TIME =,E16.6,8H(MODE 1),1X,E16.6,8H(MODE
               2)
 337     1000 FORMAT(1H0,4E12.4)
001337     1020 FORMAT(1H0,*BATTERY POWER DISTRIBUTION*,/50X,*NEGATIVE*,1X,*PO
               1VE*,/1X,    *38-34*,1X,*34-30*,1X,*30-26*,1X,*26-22*,1X,*22-18*
               21X,*18-14*,1X,*14-10*,2X,*10-6*,2X,*6-2*,3X,*2-2*,3X,*2-6*,2X,
```

ORIGINAL PAGE IS
OF POOR QUALITY

```
          3*6-10*,1X,*10-14*,1X,*14-18*,1X,*18-22*,1X,*22-26*,1X,*26-30*,
          4*30-34*,1X,*34-38*,1X,*TOTAL*/1(20I6))
1337       END
```

ORIGINAL PAGE IS
OF POOR QUALITY

```
                SUBROUTINE VEHIC(V,A,T,YDOT,Y,NGEAR,NGEAR2)
          C
          C     VEHIC COMPUTES POWER REQUIREMENTS AND LOSSES FROM REAR WHEELS
          C         THROUGH ENGINE
          C
          C     DATA IN COMMON -
          C
000012          COMMON DISPL,RPM(20),TQMAX(20),BMEP(20),BSFC(20,20),NRPM,NMEP,
               1EMUM,EMUG,FINNLD,SPMO(20),TMCMAX(20),TMCMIN(20),NSPMO,
               2CTCZRO,TSP(20),TQR(20),SFR(20),TSP2(20),NTSP,
               3NLCCK(5),TRATIO(5),CT1(5),CT2(5),EMUT(5),
               4WB,EEMAX,EMURG,EMURG2,
               5DRATIO,CD1,CD2,EMUD,RTIRE,CTIRE1,CTIRE2,VMASS,DLI,CDA,
               6TEOMIN,DRMAX,RPMIDL,VMASS2,PEOMIN,
               7FUELSG,SKALE,THSKL,NTH,NDDSCH ,CHGEFF,NCYCLE,NCOMP,DSTAV,
               8NUNITS,THSET(5),UPSHFT(5),DNSHFT(5),DDISCH(20),CYCLES(20),NTC(
               9NPRTC(3),DTC(3),TFC(3),DSUP(30),DNC(30),DBAR(30)
               1,RPMBST,PBEST,PEOP(20),RPMEOP(20),RPMOPM,EMUCVT,RATUP,RATDN,NC
               2,PDENS(20),EDENS(20),NDENS
               3,VMAX,TEOMN2,UPSEL,DNSEL,DWARM,NAX,RPMAX(20),TAX(20)
000012          COMMON TIMC(3,200),SPEDC(3,200),GAMMA(30,3)
          C
          C     VARIABLES IN COMMON -
          C
000012          COMMON FA,FR,FAC,FNET,TCC,TTC,RPMDO,RPMTC,TSC,RPMSC,RPMTCO,TTC
               1RPMTCN,TMC,TEC,TMC2,TSC2,TGC,PSC,PEO,PEO2,PMC,PMC2,PGO,PBRK,FC
               2PO,PT,PRW,PLTC,THPER,TTCIN
               3,RPMEO,RPMEO2,PLTC2,VMPS
               4,TSC2,RPMSC2,PSC2,RPMTC1,RPMTC2,RPMEO,RPMEO2
          C
000012          REAL YDOT(20),INT1,INT2
          C
          C     COMPUTE SPEEDS AND LOAD-INDEPENDENT LOSSES THROUGH DRIVE TRAIN
          C
000012          VMPS=AMAX1(0.0,V/3.6)
000016          NLCK=NLOCK(NGEAR)
000020          NLCK2=NLOCK(NGEAR2)
000022          RPMDO=9.5492967*VMPS/RTIRE
000025          RPMTC=RPMDO*DRATIO
000027          RPMSC=RPMTC*TRATIO(NGEAR)
000031          RPMSC2=RPMTC*TRATIO(NGEAR2)
000033          TLFD=CD1+CD2*RPMTC
000036          TLFT=CT1(NGEAR)+CT2(NGEAR)*RPMSC
000042          TLFT2=CT1(NGEAR2)+CT2(NGEAR2)*RPMSC2
          C     COMPUTE ROAD LOAD POWER REQUIREMENTS
          C     AERODYNAMIC -
          C
000046          FA=0.6125*CDA*VMPS**2
000051          PA=FA*VMPS/1000.
000053          YDOT(1)=PA/1000.
          C
          C     ROLLING RESISTANCE -
          C
000054          FR=9.807*VMASS*(CTIRE1+CTIRE2*V)
000061          PR=FR*VMPS/1000.
```

```
000063          YDOT(1)=(FA+FF)/1000.
          C
          C     ACCELERATION -
          C
000065          FAC=VMASS2*A
000067          FNET=FA+FR+FAC+FG
000073          TDO=FNET*RTIRE
000075          PRW=0.0001047197*TDO*RPMDO
000077          IF(FNET.LT.0.0)GO TO 200
          C
          C     NON-NEG. NET DRIVING FORCE TO THE WHEELS IS NEEDED
          C     DIFFERENTIAL -
          C
000100          TTO=TDO/(EMUD*DRATIO)+TLFD
          C
          C     TRANSMISSION -
          C
000103          TSO=TTO/(EMUT(NGEAR)*TRATIO(NGEAR))+TLFT
000110          PSO=TSO*RPMSO*0.0001047197
000112          TSO2=TTO/(EMUT(NGEAR2)*TRATIO(NGEAR2))+TLFT2
000120          PSO2=TSO2*RPMSO2*0.0001047197
          C
          C     IS CAR AT REST AND IDLING -
          C
000122          IF(ABS(VMPS).LT.0.2.AND.ABS(A).LT.0.1)GO TO 300
          C
  0134          CALL PMOVR(1,JBRK,NLCK,NLCK2)
000137      140 GO TO 400
          C
          C     NET DRIVING FORCE AT WHEELS IS NEGATIVE
          C
000143      200 TTO=TDO*EMUD/DRATIO+TLFD
000147          TSO=TTO*EMUT(NGEAR)/TRATIO(NGEAR)+TLFT
000153          PSO=TSO*RPMSO*0.0001047197
000155          TSO2=TTO*EMUT(NGEAR2)/TRATIO(NGEAR2)+TLFT2
000162          PSO2=TSO2*RPMSO2*0.0001047197
000165          NGEAR=NGEAR2
000166          IF(PSO.GE.0.0)GO TO 210
000167          CALL PMOVR(-1,JBRK,NLCK,NLCK2)
000172          IF(JBRK.EQ.0)GO TO 400
          C
          C
000177          PSO=TSO*RPMSO*0.0001047197
000201          PSO2=PSO
000202          TTO=(TSO-TLFT)*TRATIO(NGEAR)/EMUT(NGEAR)
000206          TDO=(TTO-TLFD)*DRATIO/EMUD
000212          GO TO 400
000212      210 CALL PMOVR(1,JBRK,NLCK,NLCK2)
000215      240 GO TO 400
          C
          C     CAR IS AT REST AND IDLING
          C
000221      300 A=0.0
000222          VMPS=0.0
000223          CALL PMOVR(0,JBRK,NLCK)
```

ORIGINAL PAGE IS
OF POOR QUALITY

```
000225          PSO=0.0
  0226          PSO2=0.0
        C
        C       COMPUTE ENGINE FUEL RATE AND DERIVATIVES OF VARIABLES
        C
000227      400 IF(PEO.NE.0.0)GO TO 410
000234          FC=0.0
000235          GO TO 420
000235      410 BRMEP=125.664*TEO/DISPL
000240          SFC=INT2(BRMEC,BRMEP,RPM,BMEP,BSFC,NRPM,NMEP)
000247          FC=SFC*PEO
000251      420 IF(PEO2.NE.0.0)GO TO 430
000256          FC2=0.0
000257          GO TO 440
000257      430 BRMEP2=125.664*TEO2/DISPL
000262          SFC=INT2(BRMEC2,BRMEP2,RPM,BMEP,BSFC,NRPM,NMEP)
000271          FC2=SFC*PEO2
000273      440 PD=TTO*RPMDC*0.0001047197
000276          PBRK=PRW-PD
000300          PT=TTO*RPMTC*0.0001047197
000302          YDOT(2)=(ABS(PT-PD)+ABS(PSO-PT)+ABS(PLTC))/1000.
000320          YDOT(3)=(ABS(PT-PD)+ABS(PSO2-PT)+ABS(PLTC2))/1000.
000333          YDOT(4)=ABS(PBRK)/1000.
000335          YDOT(5)=PSO/1000.
000337          YDOT(6)=PSO2/1000.
000340          YDOT(7)=PEO/1000.
  0342          YDOT(8)=PEO2/1000.
000344          YDOT(9)=PMC/1000.
000345          YDOT(10)=PMC2/1000.
000347          YDOT(11)=A*3.6
000351          YDOT(12)=VMPS/1000.
000353          YDOT(13)=PGC/1000.
000354          YDOT(14)=0.
000355          IF(PEO.EQ.0.)GO TO 442
000356          YDOT(14)=1.
000360      442 YDOT(15)=0.
000361          IF(PEO2.EQ.0.)GO TO 444
000362          YDOT(15)=1.
000364      444 YDOT(16)=FC/3600.
000356          YDOT(17)=FC2/3600.
000370          YDOT(18)=(PINNLO+PMC/EMUM+PGC*EMUG*EMUPG)/1000.
000377          YDOT(19)=(PINNLO+PMC2/EMUM+PGO*EMUG*EMUPG2)/1000.
000406          RETURN
000407          END
```

```
                SUBROUTINE HYREAD(NGEAR)
          C
          C     HYREAD INPUTS DATA FOR HYBRID2
          C
          C     DATA IN COMMON -
000003          COMMON DISPL,RPM(20),TQMAX(20),BMEP(20),BSFC(20,20),NRPM,NMEP,
               1EMUM,EMUG,PINNLD,SPMO(20),TMOMAX(20),TMOMIN(20),NSPMO,
               2CTOZRO,TSP(20),TQP(20),SPR(20),TSP2(20),NTSP,
               3NLOCK(5),TRATIO(5),CT1(5),CT2(5),EMUT(5),
               4WB,EBMAX,EMURG,EMURG2,
               5DRATIO,CD1,CD2,EMUD,RTIRE,CTIRE1,CTIRE2,VMASS,DLI,CDA,
               6TECMIN,DBMAX,RPMIDL,VMASS2,PEOMIN,
               7FUELSG,SKALE,TMSKL,NTH,NCOSCH ,CHGEFF,NCYCLE,NCOMP,DSTAV,
               8NUNITS,THSFT(5),UPSHFT(5),DNSHFT(5),DDISCH(20),CYCLES(20),NTC(
               9NPRTC(3),DTC(3),TFC(3),DSUP(30),DNC(30),DBAR(30)
               1,RPMBST,PBEST,PEOP(20),RPMEOP(20),RPMOPM,EMUCVT,RATUP,RATDN,NO
               2,PDENS(20),EDENS(20),NDENS
               3,VMAX,TEOMN2,UPSEL,DNSEL,DWARM,NAX,RPMAX(20),TAX(20)
000003          COMMON TIMC(3,200),SPEDC(3,200),GAMMA(30,3)
          C
          C     VARIABLES IN COMMON -
000003          COMMON FA,FR,FAC,FNET,TDC,TTC,RPMDO,RPMTC,TSO,RPMSO,RPMTCO,TTC
               1RPMTCN,TMO,TEO,TMO2,TEO2,TGO,PSO,PEO,PEO2,PMO,PMO2,PGO,PBRK,FC
               2FD,PT,FPW,PLTC,THPPC,TTCIN
               3,RPMEO,RPMEO2,PLTC2,VMFS
               4,TSO2,RPMSO2,PSO2,RPMTC1,RPMTC2,RPMEP,RPMEP2
          C
          C     INPUT ENGINE DATA
          C
000003          READ 605,NRPM,NMEP,FUELSG,DISPL,SKALE
000021          READ 610,(RPM(J),TQMAX(J),J=1,NRPM),(BMEP(J),J=1,NMEP),((BSFC(
               1,J=1,NMEP),I=1,NRPM)
000057          READ 600,NOP,RPMBST,PBEST
000071          READ 610,(PEOP(J),RPMEOP(J),J=1,NOP)
000106          DISPL=DISPL*SKALE
000110          PBEST=PBEST*SKALE
000111          DO 11 J=1,NRPM
000113          TQMAX(J)=SKALE*TQMAX(J)
000115       11 CONTINUE
000117          DO 12 J=1,NOP
000121          PEOP(J)=PEOP(J)*SKALE
000123       12 CONTINUE
000125          PRINT 600,FUELSG,DISPL
000135          PRINT 805
000141          DO 1 J=1,NRPM
000144          PRINT 810,RPM(J),TQMAX(J),BMEP(1),BSFC(J,1)
000157          PRINT 806,(BMEP(K),BSFC(J,K),K=2,NMEP)
000176        1 CONTINUE
000202          PRINT 807,RPMBST,PBEST
000211          PRINT 810,(PEOP(J),RPMEOP(J),J=1,NOP)
          C
          C     INPUT MOTOR/GENERATOR DATA
          C
000226          READ 600,NSPMO,EMUM,EMUG,TMSKL,PINNLD,RPMIDL,RPMOPM
000250          READ 610,(SPMO(J),TMOMAX(J),TMOMIN(J),J=1,NSPMO)
```

```
000267          DO 2 J=1,NSPMC
  0272          TMCMAX(J)=TMCMAX(J)*TMSKL
  0274          TMCMIN(J)=TMCMIN(J)*TMSKL
000276        2 CONTINUE
000300          PRINT 811
000303          PRINT 812,EMUM,EMUG,FINALD,RPMIDL,RPMOPM
000321          PRINT 813
000325          PRINT 814,(SPMO(J),TMCMAX(J),TMCMIN(J),J=1,NSPMC)
          C
000344          READ 600,JCVT
          C
          C     JCVT=0 FOR TORQUE CONVERTOR, =1 FOR CVT
          C
000352          IF(JCVT.EQ.0)GO TO 4
000354          READ 610,EMUCVT,RATUP,RATDN
000366          PRINT 808,EMUCVT,RATUP,RATDN
000400          GO TO 5
          C     INPUT TORQUE CONVERTOR DATA
          C
000402        4 READ 620,NTSP
000410          READ 610,CTCZRO,(TSP(J),TOR(J),SPR(J),J=1,NTSP)
000431          PRINT 860
000435          PRINT 865,CTCZRO
000443          PRINT 870
000447          PRINT 814,(TSP(J),TOR(J),SPR(J),J=1,NTSP)
000466          DO 3 J=1,NTSP
  0471          TSP2(J)=TSP(J)*SQRT(TOR(J))
000477        3 CONTINUE
          C
          C     INPUT TRANSMISSION DATA
          C
000502        5 READ 605,NGEAR,NTH,UPSEL,DNSEL
000516          READ 601,(NLOCK(J),TRATIO(J),CT1(J),CT2(J),EMUT(J),J=1,NGEAR)
000547          READ 610,(THSET(J),UPSHFT(J),DNSHFT(J),J=1,NTH)
000566          PRINT 840
000572          PRINT 841
000576          PRINT 842,(NLOCK(J),TRATIO(J),CT1(J),CT2(J),EMUT(J),J=1,NGEAR)
000627          PRINT 844,UPSEL,DNSEL
000637          PRINT 843
000643          PRINT 814,(THSET(J),UPSHFT(J),DNSHFT(J),J=1,NTH)
          C
          C     INPUT BATTERY DATA
          C
000662          READ 605,NODSCH,NDENS,WB,EBMAX,EMURG,EMURG2,CHGEFF
000704          READ 610,(DDISCH(J),CYCLES(J),J=1,NODSCH)
000721          READ 610,(PDENS(J),EDENS(J),J=1,NDENS)
000736          PRINT 850
000742          PRINT 855
000746          PRINT 815,WB,EBMAX,EMURG,EMURG2,CHGEFF
000764          PRINT 880
  1770          PRINT 910,(DDISCH(J),CYCLES(J),J=1,NODSCH)
  1005          PRINT 925
001011          PRINT 910,(PDENS(J),EDENS(J),J=1,NDENS)
          C
          C     INPUT DIFFERENTIAL AND TIRE DATA
```

```
          C
 1026           READ 610,DRATIC,CD1,CD2,EMUD,RTIRE,CTIRE1,CTIRE2
 1050           PRINT 875
001054          PRINT 885,DRATIC,CD1,CD2,EMUD,RTIRE,CTIRE1,CTIRE2
          C
          C     INPUT ACCESSORY DATA
          C
001076          READ 600,NAX
001104          READ 610,(RPMAX(J),TAX(J),J=1,NAX)
001121          PRINT 1000
001125          PRINT 910,(RPMAX(J),TAX(J),J=1,NAX)
          C
          C     INPUT VEHICLE DATA
          C
001142          READ 610,VMASS,DLI,CDA
001154          PRINT 890,VMASS,DLI,CDA
001166          VMASS2=VMASS+DLI/RTIRE**2
          C
          C     INPUT DRIVING CYCLE DATA
          C
001172          READ 620,NCYCLE
001177          PRINT 915
001203          DO 45 JC=1,NCYCLE
001206          READ 625,NTC(JC),NPRTC(JC),NUNITS,DTC(JC),TFC(JC)
001223          NT=NTC(JC)
001225          READ 610,(TIMC(JC,J),SPEDC(JC,J),J=1,NT)
   245          IF(NUNITS.NE.1)GO TO 41
          C
          C     CONVERT MPH TO KILOMETERS PER HOUR
          C
001250       30 DO 40 J=1,NT
001252          SPEDC(JC,J)=SPEDC(JC,J)*1.6093
001255       40 CONTINUE
001257       41 PRINT 920
001263          PRINT 910,(TIMC(JC,J),SPEDC(JC,J),J=1,NT)
001303       45 CONTINUE
001307          READ 600,NCOMP,DSTAV,DWARM
001320          PRINT 990,DSTAV
001326          PRINT 995
001332          DO 320 JC=1,NCOMP
001335          READ 610,DSUF(JC),DNC(JC),(GAMMA(JC,J),J=1,NCYCLE)
001354          PRINT 815,DSUF(JC),DNC(JC),(GAMMA(JC,J),J=1,NCYCLE)
001374      320 CONTINUE
001400          PRINT 991,DWARM
001405          DBAR(1)=DSUF(1)/2.
001407          DO 46 J=2,NCOMP
001412          DBAR(J)=(DSUF(J)+DSUF(J-1))/2.
001416       46 CONTINUE
001420          RETURN
          C
          C     FORMAT STATEMENTS
          C
001420      600 FORMAT(I10,6F10.4)
001420      601 FORMAT(I10,4F10.4)
001420      605 FORMAT(2I10,5F10.4)
```

AL PAGE IS
OR ALITY

```
001420      810 FORMAT(7F10.4)
001420      820 FORMAT(7I10)
    420     825 FORMAT(3I10,2F10.4)
001420      800 FORMAT(1H0,11HENGINE DATA/1X,23HFUEL SPECIFIC GRAVITY =,E12.4/
                11X,14HDISPLACEMENT =,E12.4)
001420      805 FORMAT(1H0,7X,3HRPM,9X,11HMAX. TORQUE,8X,4HBMEP,12X,4HBSFC)
001420      806 FORMAT(1H ,32X,2E16.6)
001420      807 FORMAT(1H0,30HBEST OPERATING POINT - SPEED =,E12.4,6X,7HPOWER =
                1E12.4//6X,5HPOWER,8X,10HOPT. SPEED)
001420      808 FORMAT(1H0,19HCVT CHARACTERISTICS//1X,12HEFFICIENCY =,E12.4,4X,
                115HSPEEDUP RATIO =,E12.4,4X,16HSLOWDOWN RATIO =,E12.4)
001420      810 FORMAT(1H ,4E16.6)
001420      811 FORMAT(1H0,20HMOTOR/GENERATOR DATA)
001420      812 FORMAT(1H0,13HEFF.(MOTOR) =,E12.4,6X,12HEFF.(GEN.) =,E12.4,6X,
                121HNO LOAD INPUT POWER =,E12.4,6X,12HIDLE SPEED =,E12.4/1X,22HF
                2 OPERATING SPEED =,E12.4)
001420      813 FORMAT(1H0,7X,3HRPM,9X,11HMAX. TORQUE,5X,11HMIN. TORQUE)
001420      814 FORMAT(1H ,3E16.6)
001420      815 FORMAT(1H ,5E16.6)
001420      840 FORMAT(1H0,12HGEARBOX DATA)
001420      841 FORMAT(1H0,5X,7HLOCKUP-,10X,5HRATIO,10X,22HSPIN LOSS COEFFICIEN
                19X,11HTORQUE EFF.)
001420      842 FORMAT(1H ,I8,8X,4E16.6)
001420      843 FORMAT(1H0,4X,10HENG. POWER,5X,11HUPSHIFT RPM,4X,13HDOWNSHIFT R
001420      844 FORMAT(1H0,37HSHIFT POINTS FOR ELECTRIC OPERATION -,2E12.4)
001420      850 FORMAT(1H0,12HBATTERY DATA)
    420     855 FORMAT(1H0,6X,4HMASS,7X,14HENERGY DENSITY,2X,15HAV. REGEN. EFF.
                11X,15HMAX REGEN. EFF.,2X,13HRECHARGE EFF.)
001420      860 FORMAT(1H0,21HTORQUE CONVERTOR DATA)
001420      865 FORMAT(1H0,17HNI**2/TI(STALL) =,E16.6)
001420      870 FORMAT(1H0,3X,11HNO/SQRT(TO),8X,5HTO/TI,11X,5HNO/NI)
001420      875 FORMAT(1H0,18HAXLE AND TIRE DATA )
001420      885 FORMAT(1H0,17HDIFF. RATIO =,E16.6/1X,24HSPIN LOSS COEFFICIENTS
                12E16.6/1X,13HTORQUE EFF. =,E16.6/1X,16HROLLING RADIUS =,E16.6/
                21X,33HROLLING RESISTANCE COEFFICIENTS =,2E16.6)
001420      890 FORMAT(1H0,14HVEHICLE MASS =,E16.6,5X,19HDRIVELINE INERTIA =,E
                1,5X,19H(DRAG COEF.)*AREA =,E16.6)
001420      910 FORMAT(1H ,2E16.6)
001420      915 FORMAT(1H0,14HDRIVING CYCLES)
001420      920 FORMAT(1H0,6X,4HTIME,12X,5HSPEED)
001420      925 FORMAT(1H0,1X,14HSPECIFIC POWER,2X,15HSPECIFIC ENERGY)
001420      980 FORMAT(1H0,1X,15HDEPTH OF DISCH.,6X,10HCYCLE LIFE)
001420      990 FORMAT(1H0,24HTRAVEL DISTRIBUTION DATA/1X,11HAV. USAGE =,E12.4
001420      991 FORMAT(1H0,*WARMUP DISTANCE =*,E12.4)
001420      995 FORMAT(1H0,3X,10HMAX. DIST.,4X,15HFRACT. OF TOTAL,14X,21HDRIVI
                1YCLE WEIGHTS)
001420     1000 FORMAT(1H0,14HACCESSORY LOAD/6X,5HSPEED,11X,6HTORQUE)
001420          END
```

```
                SUBROUTINE GESHFT(IFLAG,JGEAR,JGEAR2,NGEAR)
          C     DATA IN COMMON -
 .0007          COMMON DISPL,RPM(20),TQMAX(20),PMEP(20),BSFC(20,20),NRPM,NMEP,
               1EMUM,EMUG,FINALD,SPMO(20),TMCMAX(20),TMOMIN(20),NSPMO,
               2CTCZPO,TSP(20),TQP(20),SPR(20),TSP2(20),NTSP,
               3NLCOK(5),TRATIO(5),CT1(5),CT2(5),EMUT(5),
               4WB,EBMAX,EMURG,EMURG2,
               5DRATIO,CD1,CD2,EMUD,RTIRE,CTIRE1,CTIRE2,VMASS,DLI,CDA,
               6TEOMIN,DBMAX,RPMIDL,VMASS2,PEOMIN,
               7FUELSG,SKALE,TMSKL,NTH,NDOSCH ,CHGEFF,NCYCLE,NCCMP,DSTAV,
               8NUNITS,THSET(5),UPSHFT(5),DNSHFT(5),DDISCH(20),CYCLES(20),NTC(
               9NPRTC(3),DTC(3),TFC(3),DSUP(30),CNC(30),DBAR(30)
               1,RPMBST,PREST,PEOP(20),RPMECF(20),RPMOPM,EMUCVT,RATUP,RATDN,NC
               2,PDENS(20),EDENS(20),NDENS
               3,VMAX,TEOMN2,UPSEL,DNSEL,CHARM,NAX,RPMAX(20),TAX(20)
000007          COMMON TIMC(3,200),SPECC(3,200),GAMMA(30,3)
          C
          C     VARIABLES IN COMMON -
000007          COMMON FA,FR,FAC,FNET,TCC,TTC,RPMDO,RPMTC,TSO,RPMSC,RPMTCO,TTC
               1RPMTCN,TMC,TEC,TMO2,TEO2,TGO,PSO,PEO,PEO2,PMC,PMO2,PGO,PERK,FC
               2PO,PT,PRW,PLTC,THRPD,TMCIN
               3,RPMEC,RPMEC2,PLTC2,VMPS
               4,TSO2,RPMSO2,PSO2,RPMTC1,RPMTC2,RPMEP,RPMEP2
000007          REAL INT1
          C
000007          IF(PEO.GT.0.0)GO TO 5
          C
          C     MODE 1 SHIFT DETERMINED BY MOTOR/GEN. CHARACTERISTICS
          C
000011          SHFTUP=UPSEL
000012          SHFTDN=DNSEL
000013          GO TO 10
          C
          C     MODE 1 SHIFT DETERMINED BY HEAT ENGINE CHARACTERISTICS
          C
000014        5 SHFTUP=INT1(PEO,THSET,UPSHFT,NTH)
000020          SHFTDN=INT1(PEO,THSET,DNSHFT,NTH)
000024       10 IF(PEO2.GT.0.0)GO TO 15
          C
          C     MODE 2 SHIFT DETERMINED BY MOTOR/GEN. CHARACTERISTICS
          C
000031          SHFUP2=UPSEL
000032          SHFDN2=DNSEL
000033          GO TO 20
          C
          C     MODE 2 SHIFT DETERMINED BY HEAT ENGINE CHARACTERISTICS
          C
000034       15 SHFUP2=INT1(PEO2,THSET,UPSHFT,NTH)
000040          SHFDN2=INT1(PEO2,THSET,DNSHFT,NTH)
000044       20 IF(RPMTC1.GE.SHFTUP.AND.JGEAR.LT.NGEAR)GO TO 25
  0060          IF(RPMTC1.LE.SHFTDN.AND.JGEAR.GT.1)GO TO 30
  0072          IFLAG=0
000072          GO TO 40
000073       25 JGEAR=JGEAR+1
000075          IFLAG=1
```

```
000075          GO TO 40
000076       30 JGEAR=JGEAR-1
   100          IFLAG=1
000100       40 IF(RPMTC2.GE.SHFUP2.AND.JGEAR2.LT.NGEAR)GO TO 45
000112          IF(RPMTC2.LE.SHFDN2.AND.JGEAR2.GT.1)GO TO 50
000124          GO TO 100
000124       45 JGEAR2=JGEAR2+1
000126          IFLAG=1
000126          GO TO 100
000127       50 JGEAR2=JGEAR2-1
000131          IFLAG=1
000131      100 RETURN
000132          END
```

ORIGINAL PAGE IS
OF POOR QUALITY

GOLETA FORTRAN 1.3 * SEMI-AUTO REL * (01-10-73)

```
                 SUBROUTINE EMCVP (NDRV,JBRK,NLCK,NLCK2)
  0007           COMMON DISEL,RPM(20),TOMAX(20),PMEP(20),BSFC(20,20),NRPM,NMEP,
                1EMUM,EMUG,PINNLD,SPMO(20),TMOMAX(20),TMOMIN(20),NSPMO,
                2CTOZFO,TSP(20),TOP(20),SPR(20),TSP2(20),NTSP,
                3NLOCK(5),TRATIO(5),CT1(5),CT2(5),EMUT(5),
                4WP,EBMAX,EMURG,EMURG2,
                5DRATIO,CD1,CD2,EMUD,RTIRE,CTIRE1,CTIRE2,VMASS,DLI,CDA,
                6TEOMIN,DBMAX,PPMIDL,VMASS2,PEOMIN,
                7FUELSG,SKALE,TMSKL,NTH,NDDSCH ,CHGEFF,NCYCLE,NCOMP,DSTAV,
                8NUNITS,THSET(5),UPSHFT(5),DNSHFT(5),DDISCH(20),CYCLES(20),NTC(
                9NPRTC(3),DTC(3),TFC(3),DSUP(30),DNC(30),DBAR(30)
                1,RPMBST,PPEST,PEOP(20),RPMEOP(20),RPMOPM,EMUCVT,RATUP,RATDN,NO
                2,PDENS(20),EDENS(20),NDENS
                3,VMAX,TEOMN2,UPSEL,DNSEL,DWARM,NAX,RPMAX(20),TAX(20)
 000007         COMMON TIMC(3,200),SPEDC(3,200),GAMMA(30,3)
 000007         COMMON FA,FR,FAC,FNET,TDC,TTC,RPMDO,RPMTC,TSO,RPMSO,RPMTCO,TTC
                1RPMTCN,TMO,TEC,TMO2,TEO2,TGO,PSO,PEO,PEO2,PMO,PMO2,PGO,PBRK,FC
                2PD,PT,PPW,PLTC,THRPD,TTCIN
                3,RPMEO,RPMEO2,PLTO2,VMPS
                4,TSO2,PPMSO2,PSO2,RPMTO1,RPMTO2,PRMEP,BRMEP2
 000007         REAL INT1,INT2
 000007         CC=0.0001047197
 000010         IF(NDRV)50,80,10
          C
          C     SYSTEM POWER OUTPUT IS NON-NEGATIVE
          C
  0011       10 PBRK=0.0
 000012         TGO=0.0
 000013         JBRK=0
 000013         TTCO=TSO
 000015         RPMTCO=RPMSO
 000016         CALL TOCON(1,1,NLCK)
 000020         TACC=INT1(RPMTCN,RPMAX,TAX,NAX)
 000024         TTCIN=TTCIN+TACC
 000025         RPMTC1=RPMTCN
 000027         TTCN1=TTCIN
 000030         THEMAX=INT1(RPMTCN,RPM,TOMAX,NRPM)
 000034         TMMAX=INT1(RPMTCN,SPMO,TMOMAX,NSPMO)
 000040         PHEMAX=CC*THEMAX*RPMTCN
 000042         PMMAX=CC*TMMAX*RPMTCN
 000044         PCOM=CC*TTCIN*RPMTCN
 000046         PHEMIN=CC*TEOMIN*RPMTCN
 000050         PNCM=AMIN1(PEOMIN,PMMAX)
          C
          C     IS POWER REQUIRED MORE THAN NOMINAL MOTOR RATING
          C
 000054         IF(PCOM.GT.PNCM.OR.VMPS.GT.VMAX)GO TO 15
          C
          C     NO - TRACTION MOTOR HANDLES EVERYTHING
          C
  0070          TEO=0.0
  0071          RPMEO=0.0
 000072         TMO=TTCIN
 000073         GO TO 30
          C
```

```
          C     YES - HEAT ENGINE OUTS IN
          C
  0074       15 RPMEO=RPMTC1
000076       17 IF(PCOM.GT.PHEMIN+PMMAX)GO TO 20
000103          TEO=AMIN1(TTCIN,TEOMIN)
000106          TMO=TTCIN-TEO
000110          GO TO 30
          C
          C     YES - TRACTION MOTOR AT MAX, HEAT ENGINE PICKS UP REMAINDER
          C
000110       20 TEO=TTCIN-TMMAX
000112          TMO=TMMAX
          C
          C     MODE 2 CALCULATIONS
          C
000113       30 TTCO=TSO2
000115          RPMTCO=RPMSO2
000116          CALL TQCON(1,1,NLOK2)
000121          TACC=INT1(RPMTCN,RPMAX,TAX,NAX)
000125          TTCIN=TTCIN+TACC
000126          RPMTC2=RPMTCN
000130          TTCN2=TTCIN
000131          THEMAX=INT1(RPMTCN,RPM,TQMAX,NRPM)
000135          TMMAX=INT1(RPMTCN,SPMO,TMOMAX,NSPMO)
000141          PHEMAX=CC*THEMAX*RPMTCN
000143          PMMAX=CC*TMMAX*RPMTCN
  0145          PCOM=CC*TTCIN*RPMTCN
000147          PHEMIN=CC*TEOMN2*RPMTCN
000151          IF(PCOM.GT.PHEMIN)GO TO 40
000157          TEO2=0.0
000157          RPMEO2=0.0
000160          TMO2=TTCIN
000162          GO TO 100
000162       40 RPMEO2=RPMTC2
000164          TEO2=AMIN1(THEMAX,TTCIN)
000167          TMO2=TTCIN-TEO2
000171          GO TO 100
          C
          C     SYSTEM POWER OUTPUT IS NEGATIVE
          C
000171       50 TEO=0.0
000172          TEO2=0.0
000173          TMO=0.0
000174          TMO2=0.0
000175          RPMEO=0.0
000176          RPMEO2=0.0
000177          RPMTCO=RPMSO
000200          RPMTC=RPMTCO
000201          DO 60 J=1,10
000203          TMMIN=INT1(RPMTC,SPMO,TMOMIN,NSPMO)
  0207          TACC=INT1(RPMTC,RPMAX,TAX,NAX)
  0213          TTCIN=TMMIN-TACC
000215          CALL TQCON(-1,1,NLOK)
000221          IF(ABS(RPMTC-RPMTCN).LE.5.0)GO TO 65
000230          RPMTC=RPMTCN
```

ORIGINAL PAGE IS OF POOR QUALITY


```
000231        60 CONTINUE
000233        65 IF(TTCO.GT.TSO)GO TO 70
000237           TTCO=TSO
000237           TSO2=TSO
000240           CALL TOCON(1,1,NLOK)
000242           TACC=INT1(RPMTCN,RPMAX,TAX,NAX)
000246           TTCIN=TTCIN+TACC
000247           TGO=TTCIN
000250           RPMTC1=RPMTCN
000252           RPMTC2=RPMTCN
000253           TTCN1=TTCIN
000254           TTCN2=TTCIN
000255           GO TO 100
000260        70 TSO=TTCO
000262           TSO2=TTCO
000263           TTCN1=TMMIN
000264           TTCN2=TMMIN
000265           TGO=TMMIN
000266           RPMTC1=RPMTCN
000267           RPMTC2=RPMTCN
000270           JBRK=1
000271           GO TO 100
         C
         C       CAR IS AT REST AND IDLING
         C
000271        80 PBRK=0.0
   272           PGO=0.0
000273           TEO=0.0
000274           TEO2=0.0
000275           TTCO=0.0
000276           RPMEO=0.0
000277           RPMEO2=0.0
000300           RPMTCO=RPMSO
000301           CALL TOCON(1,0,NLOK)
000303           TACC=INT1(RPMTCN,RPMAX,TAX,NAX)
000307           TTCIN=TTCIN+TACC
000310           TMO=TTCIN
000311           TMO2=TTCIN
000312           RPMTC1=RPMTCN
000314           RPMTC2=RPMTCN
000315           TTCN1=TTCIN
000316           TTCN2=TTCIN
000317           JBRK=0
000322       100 PEO=CO*TEO*RPMEO
000325           PEO2=CO*TEO2*RPMEO2
000327           PMO=CO*TMO*RPMTC1
000332           PMO2=CO*TMO2*RPMTC2
000334           PGO=CO*TGO*RPMTC1
000337           PLTO=CO*ABS(TTCN1*RPMTC1-TSO*RPMSO)
000344           PLTO2=CO*ABS(TTCN2*RPMTC2-TSO2*RPMSO2)
   351           RETURN
   351           END
```

GOLETA FORTRAN 1.7 * SEMI-AUTO REL * (01-10-73)

```
                SUBROUTINE TOCON(JEND,JSTOP,NLOK)
000006          COMMON DISPL,RPM(20),TQMAX(20),BMEP(20),PSFC(20,20),NRPM,NMEP,
               1EMUM,EMUG,PINNLD,SPMO(20),TMOMAX(20),TMOMIN(20),NSPMO,
               2CTCZRO,TSP(20),TQR(20),SPR(20),TSP2(20),NTSP,
               3NLOCK(5),TRATIO(5),CT1(5),CT2(5),EMUT(5),
               4WB,EBMAX,EMURG,EMURG2,
               5DRATIO,CD1,CD2,EMUD,RTIRE,CTIRE1,CTIRE2,VMASS,DLI,CDA,
               6TEOMIN,DBMAX,RPMIDL,VMASS2,PEOMIN,
               7FUELSG,SKALE,TMSKL,NTH,NDDSCH ,CHGEFF,NCYCLE,NCOMP,DSTAV,
               8NUNITS,THSET(5),UPSHFT(5),DNSHFT(5),DDTSCH(20),CYCLES(20),NTC(
               9NPRTC(3),DTC(3),TFC(3),DSUP(30),DNC(30),DBAR(30)
               1,RPMBST,PBEST,PEOP(20),RPMEOP(20),RPMOPM,EMUCVT,RATUP,RATDN,NO
               2,PDENS(20),EDENS(20),NDENS
               3,VMAX,TEOMN2,UPSEL,DNSEL,DWARM,NAX,RPMAX(20),TAX(20)
000006          COMMON TIMC(3,200),SPEDC(3,200),GAMMA(30,3)
000006          COMMON FA,FR,FAC,FNET,TCC,TTC,RPMDO,RPMTC,TSO,RPMSC,RPMTCO,TTC
               1RPMTCN,TMC,TEC,TMO2,TEO2,TGO,PSO,PEO,PEO2,PMO,PMC2,PGO,PBRK,FC
               2PD,PT,PRW,PLTC,THRPC,TTCIN
               3,RPMEO,RPMEO2,PLTC2,VMPS
               4,TSO2,RPMSO2,PSO2,RPMTC1,RPMTC2,BRMEP,BRMEP2
000006          REAL INT1,INT2
000006          IF(JSTOP.NE.0)GO TO 5
000007          RPMTCN=RPMIDL
000010          TTCIN=RPMIDL**2/CTCZRO
000012          GO TO 100
000012        5 IF(JEND.EQ.-1)GO TO 50
          C
          C     HAVE OUTPUT SPEED AND OUTPUT TORQUE.
          C
000014          IF(NLOK.EQ.0)GO TO 7
000015          TTCIN=TTCO
000016          RPMTCN=RPMTCO
000020          GO TO 100
000020        7 IF(TTCO.NE.0.0)GO TO 10
000021          TTCIN=0.0
000022          RPMTCN=RPMTCO
000024          GO TO 100
000024       10 TSPAR=RPMTCO/SIGN(SQRT(ABS(TTCO)),TTCO)
000035          IF(TSPAR.GE.0.0)GO TO 20
000040          TTCIN=TTCO
000041          SPRAT=1.0/INT1(ABS(TSPAR),TSP,SPR,NTSP)
000047          GO TO 40
000051       20 IF(TSPAR.GT.0.0)GO TO 25
000054          IF(TTCO.GT.0.0)GO TO 22
000056          RPMTCN=RPMIDL
000057          TTCIN=RPMIDL**2/CTCZRO
000061          TTCO=TQR(1)*TTCIN
000062          GO TO 100
000063       22 TTCIN=TTCO/TQR(1)
000065          RPMTCN=SQRT(TTCIN*CTCZRO)
000071          GO TO 100
   073       25 TQRAT=INT1(TSPAR,TSP,TQR,NTSP)
000077          TTCIN=TTCO/TQRAT
000100       30 SPRAT=INT1(TSPAR,TSP,SPR,NTSP)
000104       40 RPMTCN=RPMTCO/SPRAT
```

```
000106          GO TO 100
          C
          C     HAVE OUTPUT SPEED AND INPUT TORQUE
          C
000111       50 IF(NLCK.EQ.0)GO TO 55
000112          TTCO=TTCIN
000114          RPMTCN=RPMTCC
000115          GO TO 100
000116       55 IF(TTCIN.NE.0.0)GO TO 60
000117          TTCO=0.0
000120          RPMTCN=AMAX1(RPMIDL,RPMTCC)
000124          GO TO 100
000125       60 TSPAR2=RPMTCC/SIGN(SQRT(ABS(TTCIN)),TTCIN)
000136          IF(TSPAR2.GE.0.0)GO TO 70
000141          TTCO=TTCIN
000142          SPRAT=1.0/INT1(ABS(TSPAR2),TSP2,SPR,NTSP)
000150          GO TO 90
000152       70 IF(TSPAR2.GT.0.0)GO TO 75
000155          IF(TTCIN.GT.0.0) GO TO 72
000157          RPMTCN=RPMIDL
000160          TTCIN=RPMIDL**2/CTCZRC
000161          TTCO=TQR(1)*TTCIN
000163          GO TO 100
000163       72 TTCO=TTCIN*TQR(1)
000165          RPMTCN=SQRT(TTCIN*CTCZRC)
000171          GO TO 100
   173       75 TQRAT=INT1(TSPAR2,TSP2,TQR,NTSP)
000177          TTCO=TTCIN*TQRAT
000200       80 SPRAT=INT1(TSPAR2,TSP2,SPR,NTSP)
000204       90 RPMTCN=RPMTCC/SPRAT
000206      100 RPMTCN=AMAX1(RPMIDL,RPMTCN)
000212          RETURN
000212          END
```

GOLETA FORTRAN 1.3 * SEMI-AUTO REL * (01-10-73)

```
                SUBROUTINE FILTER(NP,DTP,DTFLTR,P)
          C
          C     SMOOTHS A GIVEN PERIODIC FUNCTION BY AVERAGING OVER SUB-INTERV
000007          REAL P(2800)
000007          TFP=FLOAT(NP)*DTP
000010          JDT=IFIX((DTFLTR+0.001)/DTP)
000013          JLAST=NP+JDT
000015          DO 3 J=1,NP
000016          P(NP+JDT+1-J)=P(NP+1-J)
000022        3 CONTINUE
000024          DO 5 J=1,JDT
000025          P(J)=P(JLAST+J-JDT)
000031          P(JLAST+J)=P(JDT+J)
000035        5 CONTINUE
000037          NINTM=2*JDT-1
000040          NINT=2*JDT
000042          DO 20 JP=1,NP
000043          PTEMP=P(JP)+P(JP+NINT)
000050          DO 10 K=1,NINTM
000051          PTEMP=PTEMP+(3.+(-1.)**(K-1))*P(JP+K)
000062       10 CONTINUE
000065          P(JP)=PTEMP*DTP/(6.*DTFLTR)
000071       20 CONTINUE
000073          RETURN
000073          END
```

ORIGINAL PAGE IS
POOR QUALITY

GOLETA FORTRAN 1.3 * SEMI-AUTO REL * (01-10-73)

```
                REAL FUNCTION INT1(EX,X,Y,NX)
000007          REAL X(200),Y(200)
 0007           IF(EX.GE.X(1))GO TO 5
000011          JRT=2
000012          GO TO 20
000013        5 DO 10 J=1,NX
000015          IF(EX.LT.X(J))GO TO 15
000020       10 CONTINUE
000022       15 JRT=J
000024       20 INT1=Y(JRT-1)+(EX-X(JRT-1))*(Y(JRT)-Y(JRT-1))/(X(JRT)-X(JRT-1
000040          RETURN
000041          END
```

```
                REAL FUNCTION INT2(EX,WHY,X,Y,Z,NX,NY)
          C
          C     INT2 INTERPOLATES IN TWO VARIABLES INTERPOLATION SURFACE IS A
          C     RULED SURFACE.
          C
000012          REAL X(20),Y(20),Z(20,20)
000012          IF(EX.GE.X(1))GO TO 5
000014          JLEFT=1
000015          GO TO 20
000016        5 DO 10 J=1,NX
000020          IF(EX.LT.X(J))GO TO 15
000023       10 CONTINUE
000025       15 JLEFT=J-1
000027       20 IF(WHY.GE.Y(1))GO TO 25
000032          JBOTM=1
000033          GO TO 40
000033       25 DO 30 J=1,NY
000035          IF(WHY.LT.Y(J))GO TO 35
000040       30 CONTINUE
000043       35 JBOTM=J-1
000045       40 RX=(EX-X(JLEFT))/(X(JLEFT+1)-X(JLEFT))
000052          RY=(WHY-Y(JBOTM))/(Y(JBOTM+1)-Y(JBOTM))
000056          RXRY=RX*RY
000060          W1=1.-RX-RY+RXRY
000063          W2=RY-RXRY
000065          W3=RXRY
  0066          W4=RX-RXRY
  0067          INT2=W1*Z(JLEFT,JBOTM)+W2*Z(JLEFT,JBOTM+1)+W3*Z(JLEFT+1,JBOTM+
               1+W4*Z(JLEFT+1,JBOTM)
000110          RETURN
000110          END
```

ENGINE DATA
FUEL SPECIFIC GRAVITY = 7.1300E-01
DISPLACEMENT = 1.4600E+03

RPM	MAX. TORQUE	BMEP	BSFC
0.	6.000000E+01	8.530000E-01	1.500000E+03
		1.706000E+00	6.500000E+02
		2.559000E+00	4.000000E+02
		3.412000E+00	3.500000E+02
		4.265000E+00	3.500000E+02
		5.118000E+00	3.500000E+02
		5.971000E+00	3.500000E+02
		6.824000E+00	3.500000E+02
		7.677000E+00	3.500000E+02
		8.530000E+00	3.500000E+02
1.740000E+03	8.800000E+01	8.530000E-01	8.420000E+02
		1.706000E+00	4.890000E+02
		2.559000E+00	3.770000E+02
		3.412000E+00	3.300000E+02
		4.265000E+00	3.020000E+02
		5.118000E+00	2.830000E+02
		5.971000E+00	2.840000E+02
		6.824000E+00	3.070000E+02
		7.677000E+00	3.260000E+02
		8.530000E+00	3.450000E+02
2.320000E+03	9.300000E+01	8.530000E-01	7.660000E+02
		1.706000E+00	4.410000E+02
		2.559000E+00	3.670000E+02
		3.412000E+00	3.270000E+02
		4.265000E+00	3.030000E+02
		5.118000E+00	2.870000E+02
		5.971000E+00	2.800000E+02
		6.824000E+00	2.810000E+02
		7.677000E+00	2.950000E+02
		8.530000E+00	3.010000E+02
2.900000E+03	9.800000E+01	8.530000E-01	7.780000E+02
		1.706000E+00	4.450000E+02
		2.559000E+00	3.650000E+02
		3.412000E+00	3.240000E+02
		4.265000E+00	3.000000E+02
		5.118000E+00	2.850000E+02
		5.971000E+00	2.760000E+02
		6.824000E+00	2.760000E+02
		7.677000E+00	2.870000E+02
		8.530000E+00	3.190000E+02
3.480000E+03	1.000000E+02	8.530000E-01	8.020000E+02
		1.706000E+00	4.600000E+02
		2.559000E+00	3.700000E+02
		3.412000E+00	3.270000E+02
		4.265000E+00	3.000000E+02
		5.118000E+00	2.830000E+02
		5.971000E+00	2.740000E+02
		6.824000E+00	2.740000E+02
		7.677000E+00	2.830000E+02
		8.530000E+00	3.150000E+02
4.060000E+03	1.000000E+02	8.530000E-01	8.140000E+02
		1.706000E+00	4.710000E+02
		2.559000E+00	3.790000E+02
		3.412000E+00	3.310000E+02
		4.265000E+00	3.030000E+02
		5.118000E+00	2.850000E+02

ORIGINAL PAGE IS
OF POOR QUALITY

		5.971000E+00	2.760000E+02
		6.824000E+00	2.780000E+02
		7.677000E+00	2.900000E+02
		8.530000E+00	3.070000E+02
4.640000E+03	9.800000E+01	8.530000E-01	8.280000E+02
		1.706000E+00	4.850000E+02
		2.559000E+00	3.880000E+02
		3.412000E+00	3.500000E+02
		4.265000E+00	3.100000E+02
		5.118000E+00	2.910000E+02
		5.971000E+00	2.810000E+02
		6.824000E+00	2.820000E+02
		7.677000E+00	2.960000E+02
		8.530000E+00	3.450000E+02
5.220000E+03	9.400000E+01	8.530000E-01	8.770000E+02
		1.706000E+00	5.120000E+02
		2.559000E+00	4.030000E+02
		3.412000E+00	3.440000E+02
		4.265000E+00	3.130000E+02
		5.118000E+00	2.970000E+02
		5.971000E+00	2.960000E+02
		6.824000E+00	3.040000E+02
		7.677000E+00	3.210000E+02
		8.530000E+00	3.450000E+02
5.800000E+03	8.800000E+01	9.530000E-01	7.900000E+02
		1.706000E+00	4.930000E+02
		2.559000E+00	3.860000E+02
		3.412000E+00	3.350000E+02
		4.265000E+00	3.160000E+02
		5.118000E+00	3.130000E+02
		5.971000E+00	3.200000E+02
		6.824000E+00	3.310000E+02
		7.677000E+00	3.500000E+02
		8.530000E+00	3.600000E+02

BEST OPERATING POINT - SPEED = 3.5000E+03 POWER = 2.6800E+01

POWER	OPT. SPEED
1.030000E+01	1.500000E+03
1.170000E+01	1.750000E+03
1.850000E+01	2.500000E+03
2.680000E+01	3.500000E+03
3.440000E+01	4.500000E+03
3.580000E+01	5.000000E+03
3.600000E+01	6.000000E+03

MOTOR/GENERATOR DATA

EFF.(MOTOR) = 8.5000E-01 EFF.(GEN.) = 8.5000E-01 NO LOAD INPUT POWER = 1.0000E+00 IDLE SPEED = 2.0000E+02
BEST OPERATING SPEED = 3.5000E+03

RPM	MAX. TORQUE	MIN. TORQUE
0.	6.251000E+01	0.
2.040000E+03	6.251000E+01	0.
2.050000E+03	1.250200E+02	0.
2.410000E+03	1.071600E+02	0.
3.100000E+03	8.260250E+01	-1.339500E+02
3.520000E+03	7.277950E+01	-1.339500E+02
4.000000E+03	6.384950E+01	-1.178760E+02
4.900000E+03	5.224050E+01	-9.644400E+01
5.290000E+03	4.465000E+01	-8.930000E+01
6.000000E+03	3.572000E+01	-6.429600E+01

ORIGINAL PAGE IS OF POOR QUALITY

TORQUE CONVERTOR DATA

NI**2/TI(STALL) = 1.917000E+04

NO/SQRT(TO)	TO/TI	NO/NI
0.	2.100000E+00	0.
1.393000E+01	2.040000E+00	1.000000E-01
2.830000E+01	1.920000E+00	2.000000E-01
4.322000E+01	1.820000E+00	3.000000E-01
5.898000E+01	1.700000E+00	4.000000E-01
7.710000E+01	1.560000E+00	5.000000E-01
9.641000E+01	1.420000E+00	6.000000E-01
1.188000E+02	1.270000E+00	7.000000E-01
1.467000E+02	1.140000E+00	8.000000E-01
1.899000E+02	1.000000E+00	9.000000E-01
2.592000E+02	1.000000E+00	9.500000E-01
4.199000E+02	1.000000E+00	9.750000E-01
1.214000E+03	1.000000E+00	1.000000E+00

GEARBOX DATA

LOCKUP-	RATIO	SPIN LOSS COEFFICIENTS		TORQUE EFF.
0	2.450000E+00	0.	0.	9.200000E-01
1	1.450000E+00	0.	0.	9.200000E-01
1	1.000000E+00	0.	0.	9.400000E-01
1	7.500000E-01	0.	0.	9.400000E-01

SHIFT POINTS FOR ELECTRIC OPERATION - 4.5000E+03 2.4000E+03

ENG. POWER	UPSHIFT RPM	DOWNSHIFT RPM
0.	2.500000E+03	1.300000E+03
1.000000E+01	2.500000E+03	1.300000E+03
3.000000E+01	5.100000E+03	3.000000E+03
5.000000E+01	6.000000E+03	3.500000E+03
6.000000E+01	6.000000E+03	3.500000E+03

BATTERY DATA

MASS	ENERGY DENSITY	AV. REGEN. EFF.	MAX REGEN. EFF.	RECHARGE EFF.
2.700000E+02	4.000000E+01	7.000000E-01	9.000000E-01	5.400000E-01

DEPTH OF DISCH.	CYCLE LIFE
2.000000E-01	4.800000E+03
4.000000E-01	3.300000E+03
5.000000E-01	2.700000E+03
6.000000E-01	2.250000E+03
7.000000E-01	1.800000E+03
8.000000E-01	1.500000E+03
9.000000E-01	1.230000E+03
1.000000E+00	1.000000E+03

SPECIFIC POWER	SPECIFIC ENERGY
0.	4.600000E+01
1.500000E+02	0.

AXLE AND TIRE DATA

DIFF. RATIO = 5.120000E+00
SPIN LOSS COEFFICIENTS = 0. 0.
TORQUE EFF. = 9.600000E-01
ROLLING RADIUS = 3.050000E-01

ORIGINAL PAGE IS
OF POOR QUALITY

ROLLING RESISTANCE COEFFICIENTS = 1.000000E-02 0.

ACCESSORY LOAD

SPEED	TORQUE
0.	0.
6.000000E+03	1.000000E+01

VEHICLE MASS = 2.118000E+03 DRIVELINE INERTIA = 6.600000E+00 (DRAG COEF.)*AREA = 8.720000E-01

DRIVING CYCLES

TIME	SPEED
0.	0.
1.000000E+00	8.000000E+00
3.900000E+00	1.600000E+01
9.400000E+00	2.400000E+01
1.900000E+01	3.200000E+01
3.800000E+01	3.200000E+01
4.200000E+01	2.950000E+01
4.700000E+01	0.
7.200000E+01	0.

TIME	SPEED
0.	0.
2.000000E+01	0.
2.600000E+01	2.735810E+01
3.100000E+01	3.637018E+01
3.700000E+01	3.218608E+01
3.900000E+01	2.365671E+01
4.330000E+01	2.542694E+01
4.680000E+01	3.653111E+01
5.020000E+01	3.653111E+01
5.460000E+01	2.413950E+01
5.960000E+01	3.942785E+01
8.020000E+01	4.135981E+01
9.720000E+01	4.908365E+01
1.086000E+02	4.908365E+01
1.123000E+02	5.198039E+01
1.150000E+02	5.133667E+01
1.246000E+02	0.
1.630000E+02	0.
1.699000E+02	3.623925E+01
1.730000E+02	4.264645E+01
1.760000E+02	3.974971E+01
1.800000E+02	4.023250E+01
1.815000E+02	4.425575E+01
1.866000E+02	2.719717E+01
1.900000E+02	3.202507E+01
1.960000E+02	5.841759E+01
2.040000E+02	7.660268E+01
2.100000E+02	7.547617E+01
2.150000E+02	7.595596E+01
2.243000E+02	8.416639E+01
2.270000E+02	8.951159E+01
2.335000E+02	8.851150E+01
2.400000E+02	9.124731E+01
2.493000E+02	9.092545E+01
2.550000E+02	8.609755E+01
2.594000E+02	8.706313E+01
2.700000E+02	9.297495E+01
2.727000E+02	9.297895E+01
2.900000E+02	9.012090E+01

6.670000E+02	8.513197E+01
6.710000E+02	8.416639E+01
6.750000E+02	8.481011E+01
6.827000E+02	7.966035E+01
6.870000E+02	7.966035E+01
7.070000E+02	9.060359E+01
7.137000E+02	9.237382E+01
7.170000E+02	9.527056E+01
7.195000E+02	9.527056E+01
7.290000E+02	8.931615E+01
7.380000E+02	8.143058E+01
7.430000E+02	7.354581E+01
7.450000E+02	6.839525E+01
7.500000E+02	4.184189E+01
7.600000E+02	4.827900E+00
7.625000E+02	0.
8.000000E+02	0.

TRAVEL DISTRIBUTION DATA
AV. USAGE = 5.5788E+01

MAX. DIST.	FRACT. OF TOTAL	DRIVING CYCLE WEIGHTS			
2.000000E+01	4.607400E-02	2.040000E-01	7.960000E-01	0.	
3.000000E+01	5.602400E-02	8.160000E-02	9.184000E-01	0.	
4.000000E+01	7.592300E-02	5.828600E-02	9.417100E-01	0.	
5.000000E+01	7.986700E-02	4.533300E-02	7.973300E-01	1.573300E-01	
6.000000E+01	7.698900E-02	3.709100E-02	6.523600E-01	3.105500E-01	
7.000000E+01	5.826500E-02	3.138500E-02	5.520000E-01	4.166200E-01	
8.000000E+01	6.722800E-02	2.720000E-02	4.784000E-01	4.944000E-01	
9.000000E+01	5.790600E-02	2.480000E-02	4.221200E-01	5.538800E-01	
1.000000E+02	5.960900E-02	2.147400E-02	3.776800E-01	6.008400E-01	
1.200000E+02	9.268600E-02	1.854500E-02	3.261800E-01	6.552700E-01	
1.400000E+02	6.525600E-02	1.569200E-02	2.760000E-01	7.083100E-01	
1.600000E+02	5.378300E-02	1.360000E-02	2.392000E-01	7.472000E-01	
1.800000E+02	4.571500E-02	1.260000E-02	2.110600E-01	7.769400E-01	
2.000000E+02	3.065600E-02	1.073700E-02	1.888400E-01	8.004200E-01	
2.200000E+02	2.258900E-02	9.714000E-03	1.708600E-01	8.194300E-01	
2.400000E+02	2.061700E-02	8.870000E-03	1.560000E-01	8.351300E-01	
2.600000E+02	1.344600E-02	8.160000E-03	1.435200E-01	8.483200E-01	
2.800000E+02	1.452100E-02	7.556000E-03	1.328900E-01	8.595600E-01	
3.000000E+02	1.039900E-02	7.034000E-03	1.237200E-01	8.692400E-01	
3.200000E+02	1.111500E-02	6.581000E-03	1.157400E-01	8.776800E-01	
3.400000E+02	4.141300E-02	6.182000E-03	1.087300E-01	8.850900E-01	

WARMUP DISTANCE = 0.

ORIGINAL PAGE IS
OF POOR QUALITY

CONTROL PARAMETERS FOR CASE 1

MIN. ENGINE TORQUE = 4.5000E+01 (MODE 1)
0. (MODE 2)
BATT. DISCH. LIMIT = 6.0000E-01
NOMINAL MOTOR POWER = 2.0000E+01
TRANSITION SPEED = 7.2000E+01

GN	TIME / RPM	D.T.ENERGY	SPEED / SYS.ENERGY	DISTANCE / ENG.ENERGY	R.L.POWER / MOTOR SHAFT ENERGY	BR.POWER / BAT.ENERGY	R.L.ENERGY / SYS.POWER	BR.ENERGY / ENG.POWER	KIN.ENERGY / MOTOR SHAFT POWER
	0.	0.	0.	0.	0.	0.	0.		
1	1129	0.	0.	0.	0.	0.	0.	5.3203E+00	2.7634E+00 0.
1	1129	0.	0.	0.		0.	0.	8.0837E+00	0.
	2.0000E+00	1.0792E+01	3.7423E-03	5.3647E+00	0.	7.8874E-04	1.8948E-17	0.	
1	1387	9.5507E-03	1.2022E-02	8.3289E-03	1.1840E-02 0.	1.5929E-02	6.0742E+00	0.	7.8133E+00 0.
1	1387	9.5507E-03	1.2022E-02	2.0169E-02	0.	2.0000E-03	6.0742E+00	7.0133E+00	0.
	4.0000E+00	1.6118E+01	1.1246E-02	6.4319E+00	-2.8422E-14	2.4061E-03	3.7896E-17	0.	
1	1844	1.3685E-02	2.7560E-02	8.3289E-03	2.9697E-02 0.	3.8937E-02	7.2825E+00	0.	8.2325E+00 0.
1	1844	1.3685E-02	2.7560E-02	3.8025E-02	0.	4.0000E-03	7.2825E+00	8.2325E+00	0.
	6.0000E+00	1.9854E+01	2.1030E-02	5.8643E+00	-2.8422E-14	4.5643E-03	4.7378E-17	0.	
1	2145	1.6963E-02	3.9876E-02	8.3289E-03	4.3852E-02 0.	5.7591E-02	6.6398E+00	0.	7.6527E+00 0.
1	2145	1.6963E-02	3.9876E-02	5.2181E-02	0.	6.0000E-03	6.6398E+00	7.6527E+00	0.
	8.0000E+00	2.1964E+01	3.2424E-02	6.7844E+00	-2.8422E-14	7.1295E-03	8.2897E-17	0.	
1	2456	2.0871E-02	5.4192E-02	8.3289E-03	6.0435E-02 0.	7.9064E-02	7.6816E+00	0.	8.9256E+00 0.
1	2456	2.0871E-02	5.4192E-02	6.8734E-02	0.	8.0000E-03	7.6816E+00	3.9256E+00	0.
	1.0000E+01	2.4514E+01	4.5403E-02	5.0304E+00	0.	1.0118E-02	1.1132E-16	0.	
1	2727	2.5308E-02	6.8909E-02	8.3289E-03	7.7839E-02 0.	1.0158E-01	5.6957E+00	0.	7.1059E+00 0.
2	1593	2.3765E-02	6.8909E-02	8.4625E-02	0.	1.0000E-02	5.6957E+00	6.1329E+00	0.
	1.2000E+01	2.6167E+01	5.9479E-02	5.3989E+00	-2.8422E-14	1.3415E-02	1.2079E-16	0.	
1	2907	2.9673E-02	8.0651E-02	8.3289E-03	9.2575E-02 0.	1.2091E-01	6.1129E+00	0.	7.7811E+00 0.
2	1689	2.6071E-02	8.0651E-02	9.7303E-02	0.	1.2000E-02	6.1129E+00	6.6111E+00	0.
	1.4000E+01	2.7833E+01	7.4479E-02	5.7703E+00	0.	1.6981E-02	1.3974E-16	0.	
1	3089	3.4514E-02	9.3296E-02	8.3289E-03	1.0858E-01 0.	1.4175E-01	6.5334E+00	0.	8.3111E+00 0.
2	1737	2.8609E-02	9.3296E-02	1.1101E-01	0.	1.4000E-02	6.5334E+00	7.0971E+00	0.
	1.6000E+01	2.9500E+01	9.0404E-02	6.1481E+00	0.	2.0829E-02	1.5632E-16	0.	
1	3270	3.9844E-02	1.0679E-01	8.3289E-03	1.2583E-01 0.	1.6404E-01	6.9612E+00	0.	8.9386E+00 0.
2	1995	3.1381E-02	1.0679E-01	1.2570E-01	0.	1.6000E-02	6.9612E+00	7.5944E+00	0.
	1.8000E+01	3.1167E+01	1.0726E-01	6.5315E+00	0.	2.4969E-02	1.7053E-16	0.	
1	3450	4.5683E-02	1.2114E-01	8.3289E-03	1.4435E-01 0.	1.8782E-01	7.3953E+00	0.	9.5825E+00 0.
2	2012	3.4397E-02	1.2114E-01	1.4139E-01	0.	1.8000E-02	7.3953E+00	8.1021E+00	0.
	2.0000E+01	3.2005E+01	1.2492E-01	2.0803E+00	1.4211E-14	2.9375E-02	1.8296E-16	0.	
1	3474	5.1205E-02	1.3120E-01	8.3289E-03	1.5875E-01 0.	2.0677E-01	2.3554E+00	0.	4.4501E+00 0.
2	2066	3.7043E-02	1.3120E-01	1.5292E-01	0.	2.0000E-02	2.3554E+00	3.1007E+00	0.
	2.2000E+01	3.2000E+01	1.4270E-01	2.2215E+00	0.	3.3818E-02	1.8889E-16	0.	
1	3479	5.5993E-02	1.3620E-01	8.3289E-03	1.6795E-01 0.	2.1959E-01	2.5152E+00	0.	4.6178E+00 0.
2	2066	3.9117E-02	1.3620E-01	1.5941E-01	0.	2.2000E-02	2.5152E+00	3.2603E+00	0.
	2.4000E+01	3.2000E+01	1.6048E-01	2.2214E+00	0.	3.8261E-02	1.9954E-16	0.	
1	3479	6.0785E-02	1.4123E-01	8.3289E-03	1.7719E-01 0.	2.3246E-01	2.5152E+00	0.	4.6178E+00 0.
2	2066	4.1195E-02	1.4123E-01	1.6593E-01	0.	2.4000E-02	2.5152E+00	3.2603E+00	0.

```
  5.2500E+02  8.9031E+01  1.1228E+01  1.5263E+01  5.6843E-14  5.3674E+00  4.7570E-02  0.
4  2973  1.4855E+00  6.8260E+00  5.0365E+00  2.8021E+00 -2.6864E-01  3.6617E+00  1.6914E+01  1.4811E+01  4.4457E+00  0.
4  2973  1.5725E+00  6.8337E+00  7.8615E+00  2.1141E-02              3.4437E-01  1.6914E+01  1.8457E+01  0.

  5.5000E+02  9.0107E+01  1.1853E+01  1.1271E+01  5.6843E-14  5.7055E+00  4.7570E-02  0.
4  3009  1.5632E+00  7.2186E+00  5.3904E+00  2.8802E+00 -2.6864E-01  3.7786E+00  1.2490E+01  1.4071E+01  0.          0.
4  3009  1.6502E+00  7.2263E+00  8.2934E+00  2.1141E-02              3.6937E-01  1.2490E+01  1.4071E+01  0.

  5.7500E+02  8.3684E+01  1.2451E+01  1.1537E+01  0.          6.0134E+00  4.7570E-02  0.
4  2795  1.6225E+00  7.4554E+00  5.6580E+00  2.8855E+00 -2.6864E-01  3.8098E+00  1.2785E+01  1.3170E+01  9.7815E-01  0.
4  2795  1.7095E+00  7.4630E+00  8.5664E+00  2.1141E-02              3.9437E-01  1.2785E+01  1.4148E+01  0.

  6.0000E+02  7.7961E+01  1.3004E+01  4.0431E+00  0.          6.2724E+00  4.7570E-02  0.
4  2604  1.6729E+00  7.6559E+00  5.8631E+00  2.9117E+00 -2.6864E-01  3.8657E+00  4.4803E+00  5.6635E+00  0.          0.
4  2604  1.7612E+00  7.6635E+00  8.7990E+00  2.1141E-02              4.1937E-01  4.4803E+00  5.6635E+00  0.

  6.2500E+02  8.5456E+01  1.3546E+01  1.9084E+01  0.          6.5220E+00  4.9527E-02  0.
4  2854  1.7474E+00  8.0557E+00  6.0972E+00  3.1309E+00 -2.9239E-01  4.1344E+00  2.1148E+01  1.3449E+01  9.1282E+00  0.
3  3805  1.8460E+00  8.0633E+00  9.2597E+00  2.2184E-02              4.2742E-01  2.1148E+01  2.3675E+01  0.

  6.5000E+02  8.0260E+01  1.4115E+01  2.3959E+01  0.          6.7999E+00  1.1675E-01  0.
4  2680  1.8235E+00  8.3712E+00  6.3290E+00  3.2990E+00 -3.4387E-01  4.3265E+00  2.6550E+01  1.2631E+01  1.5173E+01  0.
3  3574  1.9974E+00  8.3789E+00  9.6743E+00  2.2184E-02              4.1304E-01  2.6550E+01  2.8779E+01  0.

  6.7500E+02  8.4776E+01  1.4695E+01  8.7251E+00  0.          7.0873E+00  1.1675E-01  0.
4  2831  1.8953E+00  8.7595E+00  6.6096E+00  3.4405E+00 -3.4387E-01  4.5181E+00  9.6688E+00  1.1068E+01  0.          0.
4  2831  2.0740E+00  8.7672E+00  1.0101E+01  2.2184E-02              4.3804E-01  9.6688E+00  1.1068E+01  0.

  7.0000E+02  8.6773E+01  1.5267E+01  2.0505E+01  0.          7.3659E+00  1.1675E-01  0.
4  2898  1.9616E+00  9.1003E+00  6.8599E+00  3.5641E+00 -3.4387E-01  4.6884E+00  2.2723E+01  1.3656E+01  1.3533E+01  0.
4  2898  2.1403E+00  9.1080E+00  1.0475E+01  2.2184E-02              4.6304E-01  2.2723E+01  2.4189E+01  0.

  7.2500E+02  9.1823E+01  1.5904E+01  4.4401E+00 -2.8422E-14  7.7206E+00  1.1675E-01  0.
4  3067  2.0493E+00  9.5777E+00  7.1796E+00  3.7628E+00 -3.4387E-01  4.9473E+00  4.9204E+00  6.5616E+00  0.          0.
4  3067  2.2280E+00  9.5854E+00  1.0990E+01  2.5941E-02              4.9246E-01  4.9204E+00  6.5616E+00  0.

  7.5000E+02  4.1909E+01  1.6442E+01 -2.9110E+01 -8.8818E+00  7.9756E+00  2.0633E-01  0.
2  2706  2.1114E+00  9.3851E+00  7.2053E+00  3.7628E+00 -5.2659E-01  4.8635E+00 -1.7865E+01  0.          0.          -1.6587E+01
2  2706  2.3708E+00  9.3928E+00  1.1016E+01  2.5941E-02              3.7768E-01 -1.7865E+01  0.          0.

  7.6500E+02 -6.7287E-03  1.6589E+01  0.          0.          7.9917E+00  2.6342E-01  0.
1   200  2.1319E+00  9.3189E+00  7.2053E+00  3.7630E+00 -5.8126E-01  8.8462E+00  0.          0.          5.8683E-02  0.
1   200  2.4417E+00  9.3265E+00  1.1016E+01  2.6063E-02              3.5100E-01  0.          0.          5.0683E-02

CYCLE DISTANCE =  1.6509E+01
FUEL CONSUMPTION ON MODE 1 =  3.9152E+01
                    MODE 2 =  6.0482E+01
BATT. ENERGY CONSUMPTION ON MODE 1 =  8.1543E-02
                           MODE 2 =  5.9060E-03
AVERAGE SPEED =  7.7687E+01  BATTERY DEPLETION =    1.814853E-02  HEAT ENGINE ON TIME =    5.930000E+02(MODE 1)      6.740833E+02(MODE 2

BATTERY POWER DISTRIBUTION

                                                    NEGATIVE POSITIVE
39-34 34-30 30-26 26-22 22-18 18-14 14-10  10-6   6-2   2-2   2-6  6-10 10-14 14-18 18-22 22-26 26-30 30-34 34-38 TOTAL
    0     0     1     4     4     5    11    66     0   530   329   131   215    89    59    62    13    12     0  1531

FUEL AND ENERGY CONSUMPTION ON COMPOSITE CYCLES
  FUEL - MODE 1   FUEL - MODE 2  ENERGY - MODE 1 RANGE - MODE 1    FUEL - AV.      ENERGY - AV.       AV. SPEED      SP. POWER - 1
    1.525270E+01    6.757435E+01    2.200695E-01    2.083465E+01    1.525270E+01    2.200695E-01    2.675143E+01    2.180432E+01
    1.726629E+01    6.769530E+01    2.095543E-01    2.138757E+01    2.474748E+01    1.800784E-01    2.934803E+01    2.281041E+01
    1.754975E+01    6.771605E+01    2.079078E-01    2.149631E+01    3.696631E+01    1.307996E-01    2.990096E+01    2.302461E+01
```

8.25112
10.38104
10.4649
10.38702
10.69682

2.109489E+01	6.682517E+01	1.877104E-01	2.379963E+01	4.263931E+01	1.028279E-01	3.321721E+01	2.309339E+01
2.437829E+01	6.595765E+01	1.694077E-01	2.654085E+01	4.589308E+01	8.501416E-02	3.707585E+01	2.312541E+01
2.665128E+01	6.535931E+01	1.550447E-01	2.884051E+01	4.818455E+01	7.270766E-02	4.031820E+01	2.315231E+01
2.831791E+01	6.492168E+01	1.452441E-01	3.079763E+01	4.989084E+01	6.370840E-02	4.308138E+01	2.317524E+01
2.959347E+01	6.458824E+01	1.377501E-01	3.248313E+01	5.121445E+01	5.682480E-02	4.546387E+01	2.319501E+01
3.059864E+01	6.432544E+01	1.318324E-01	3.395036E+01	5.227242E+01	5.140553E-02	4.753992E+01	2.321222E+01
3.176502E+01	6.402241E+01	1.249748E-01	3.582556E+01	5.351660E+01	4.513546E-02	5.019616E+01	2.323428E+01
3.290171E+01	6.372878E+01	1.182937E-01	3.786307E+01	5.475026E+01	3.903992E-02	5.308592E+01	2.325826E+01
3.373503E+01	6.351392E+01	1.133935E-01	3.951119E+01	5.566992E+01	3.457982E-02	5.542620E+01	2.327767E+01
3.437231E+01	6.335031E+01	1.096465E-01	4.087159E+01	5.635339E+01	3.117565E-02	5.735980E+01	2.329372E+01
3.487539E+01	6.322135E+01	1.066877E-01	4.201399E+01	5.695333E+01	2.849256E-02	5.898471E+01	2.330719E+01
3.528298E+01	6.311787E+01	1.042940E-01	4.298580E+01	5.742021E+01	2.632367E-02	6.036826E+01	2.331869E+01
3.561923E+01	6.303196E+01	1.023152E-01	4.382389E+01	5.780877E+01	2.453422E-02	6.156190E+01	2.332857E+01
3.590188E+01	6.296016E+01	1.006533E-01	4.455339E+01	5.813801E+01	2.303272E-02	6.268143E+01	2.333721E+01
3.614283E+01	6.289950E+01	9.923844E-02	4.519389E+01	5.842084E+01	2.175500E-02	6.351461E+01	2.334478E+01
3.635006E+01	6.284619E+01	9.881630E-02	4.576214E+01	5.866509E+01	2.065433E-02	6.432510E+01	2.335151E+01
3.653103E+01	6.280096E+01	9.695445E-02	4.626762E+01	5.888016E+01	1.969663E-02	6.504623E+01	2.335749E+01
3.668984E+01	6.276096E+01	9.602103E-02	4.672125E+01	5.906982E+01	1.885554E-02	6.569367E+01	2.336287E+01

YEARLY AV. FUEL CONSUMPTION = 4.775425E+01
YEARLY AV. BATTERY ENERGY OUTPUT = 7.361339E-02
EXPECTED BATTERY LIFE = 1.255050E+05

YEARLY AV. FUEL ECONOMY = 1.493061E+01
YEARLY AV. WALL PLUG OUTPUT = 1.363211E-01

HEAT ENGINE ENERGY FRACTION = 5.702510E-01

ORIGINAL PAGE IS
OF POOR QUALITY

C1.2 HYBRID SYSTEM STARTUP SIMULATION PROGRAMS (VSYS & VSYS2)

1. Program Description

The programs VSYS and VSYS2 simulate the response of a hybrid system to a power demand. Initially all of the power requirements of the vehicle are being met by the electric motor under steady state conditions. The vehicle is travelling at a constant speed, the heat engine is disengaged from the drive train and is turned off.

In response to a demand for increased power output, a clutch between the engine and the motor is closed and the engine is started. The resultant torques, rpms, vehicle speed, and vehicle acceleration, are determined over time scales on the order of a second. The simulation terminates when the engine rpm reaches motor rpm.

The heat engine is modelled as a engine output torque curve that is a function of crankshaft displacement. The engine clutch is modelled as a torque curve as a function of time. Over the range of rpm's considered in the startup simulation, the motor is modelled as a straight line of motor torque versus rpm. The torque converter is modelled as two monotonic functions serving to completely determine input torque, output torque, input rpm, and output rpm, from any combination of two of these variables. The VSYS2 program version has no torque converter. The transmission has gearing, spin losses, and efficiencies. The differential has a differential ratio, spin loss, and an efficiency. The vehicle itself has aerodynamic, rolling resistance, and grade forces.

Label	Description	Units
NTHE	number of heat engine torque data points	—
HEI	heat engine inertia	$kg \cdot m^2$
THE (NTHE)	heat engine torque	nt·m
THETA (NTHE)	heat engine angular displacement	rev.
NTCL	number of clutch torque data points	—
TCL (NTCL)	clutch torque	nt·m
TIME (NTCL)	clutch torque engagement times	sec
CM	slope of motor torque versus r.p.m.	nt m/rpm
EMI	motor inertia	$kg\ m^2$
NTSP	number of torque converter data points	—
CTCZRO	(not used, kept as data convention)	—
TSP (NTSP)	torque - speed ratios	$rpm/\sqrt{nt\,m}$
TQR (NTSP)	torque ratios	—
SPR (NTSP)	speed ratios	—
NGEAR	number of gears	—
SHFTUP	upshift rpm	rpm
RATIO (NGEAR)	transmission ratios	—
CT1 (NGEAR)	friction coefficient	nt m
CT2 (NGEAR)	friction coefficient	nt m/rpm
EMUT (NGEAR)	transmission efficiency	—
DRATIO	differential ratio	—
CD1	friction coefficient	nt m
CD2	friction coefficient	nt m/rpm
EMUD	differential efficiency	—
RTIRE	tire radius	m
CTIRE 1	friction coefficient	—
CTIRE 2	friction coefficient	1/km/hr
VMASS	vehicle mass	kg
DLI	drive line inertia	$kg\ m^2$
CDA	drag coefficient * frontal area	m^2
GRAD	road gradient	—
V	vehicle speed	km/hr
DELT	run time interval for RKTTA2	sec
TF	final time in simulation	sec
NPRNT	number of suppressed print times	—

Variables	Description	Units
JGEAR	steady state gear	—
VMPS	vehicle speed	m/sec
RPMDO	differential output r.p.m.	rpm
TLFD	differential torque loss	nt m
RPMTO	transmission output r.p.m	rpm
TLFT	transmission torque loss	nt·m
RPMTCO	torque converter output r.p.m	rpm
FA	aerodynamic force	nt
FR	rolling resistance force	nt
FG	gradient force	nt
FNETØ	steady state net force	nt
TDO	differential output torque	nt·m
TTO	transmission output torque	nt·m
TTCO	torque converter output torque	nt·m
TSPAR	torque - speed ratio	rpm/$\sqrt{\text{nt m}}$
TQRAT	torque ratio	—
TTCIN	torque converter input torque	nt·m
SPRAT	speed ratio	—
RPMTCN	torque converter input rpm	rpm
TEMØ	steady state motor torque intercept	nt m
K	print skip control flag	—
T	time in simulation	sec
Y(1)	angular speed of engine	rad/sec
Y(2)	angular displacement of engine	rad.
Y(3)	angular speed of motor	rad/sec.
Y(4)	speed of vehicle	m/sec.
YDOT(1)	angular acceleration of engine	rad/sec²
YDOT(2)	angular speed of engine	rad/sec
YDOT(3)	angular acceleration of motor	rad/sec²
YDOT(4)	acceleration of vehicle	m/sec²
RPMHE	engine r.p.m.	rpm
RPMEM	motor r.p.m.	rpm
V	speed of vehicle	km/hr
A	acceleration of vehicle	g_{EARTH}
VMASS2	effective vehicle inertial mass	kg

DERIV Subroutine for VSYS

Variables	Description	Units
ICLN	clutch torque	nt m
THETAN	angular displacement of engine	rev
THEN	engine torque	nt·m
RPMDO	differential output rpm.	rpm
RPMTO	transmission output r.p.m.	rpm
RPMTCO	torque converter output r.p.m.	rpm
SPRAT	speed ratio	—
TSPAR	torque-speed ratio	$rpm/\sqrt{nt\,m}$
TQRAT	torque ratio	—
TTCO	torque converter output torque	nt m
TTCIN	torque converter input torque	nt m
TEM	motor torque	nt m
TTO	transmission output torque	nt m
TDO	differential output torque	nt m
FNET	net force on vehicle	nt
FAC	acceleration force of vehicle	nt

GENERAL RESEARCH CORPORATION

FORTRAN CODING FORM

PROGRAM VSYS

NAME

ROUTINE Input Format

DATE

PAGE 1 OF 1

FORTRAN STATEMENT

0 = ZERO Ø = ALPHA O 1 = ONE I = ALPHA I 2 = TWO Z = ALPHA Z

STATEMENT NO. / CONT / 7–10	11–20	21–30	31–40	41–50	51–60	61–70	71–72	SERIAL NUMBER 73–80
NTHE	HEI							
THE(1)	THETA(1)	...	...	THE(NTHE)	THETA(NTHE)			
NTCL								
TCL(1)	TIME(1)	...	...	TCL(NTCL)	TIME(NTCL)			
CM	EMI							
NTSP								
CTCZERO	TSP(1)	TQR(1)	SPR(1)	...	...	...		
...	...	...	TSP(NTSP)	TQR(NTSP)	SPR(NTSP)			
NGEAR	SHFTUP							
TRATIO(1)	CT1(1)	CT2(1)	EMUT(1)	...	...	...		
...	TRATIO(NGE	AR),CT1(NGE	AR),CT2(NGE	AR),EMUT(NGEAR)				
DRATIO	CD1	CD2	EMUD	RTIRE	CTIRE1	CTIRE2		
VMASS	DLI	CD4	ERAD	V				
DELT	TF	NKNT						

FORM NO. GRC 109 REV. 1

VSYS

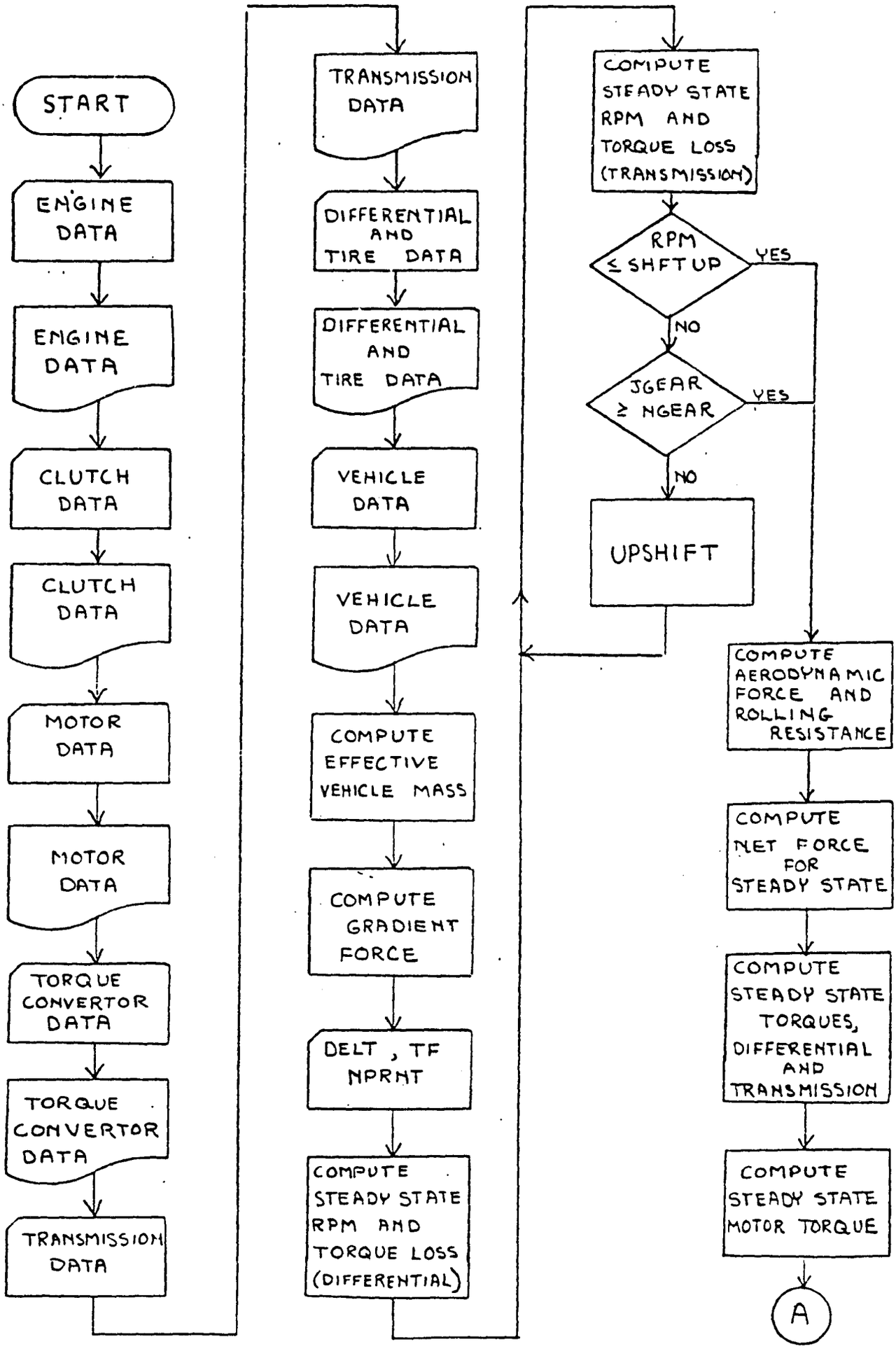
START
ENGINE DATA
ENGINE DATA
CLUTCH DATA
CLUTCH DATA
MOTOR DATA
MOTOR DATA
TORQUE CONVERTOR DATA
TORQUE CONVERTOR DATA
TRANSMISSION DATA
TRANSMISSION DATA
DIFFERENTIAL AND TIRE DATA
DIFFERENTIAL AND TIRE DATA
VEHICLE DATA
VEHICLE DATA
COMPUTE EFFECTIVE VEHICLE MASS
COMPUTE GRADIENT FORCE
DELT , TF NPRNT
COMPUTE STEADY STATE RPM AND TORQUE LOSS (DIFFERENTIAL)
COMPUTE STEADY STATE RPM AND TORQUE LOSS (TRANSMISSION)
RPM ≤ SHFTUP
YES
NO
JGEAR ≥ NGEAR
YES
NO
UPSHIFT
COMPUTE AERODYNAMIC FORCE AND ROLLING RESISTANCE
COMPUTE NET FORCE FOR STEADY STATE
COMPUTE STEADY STATE TORQUES, DIFFERENTIAL AND TRANSMISSION
COMPUTE STEADY STATE MOTOR TORQUE
A

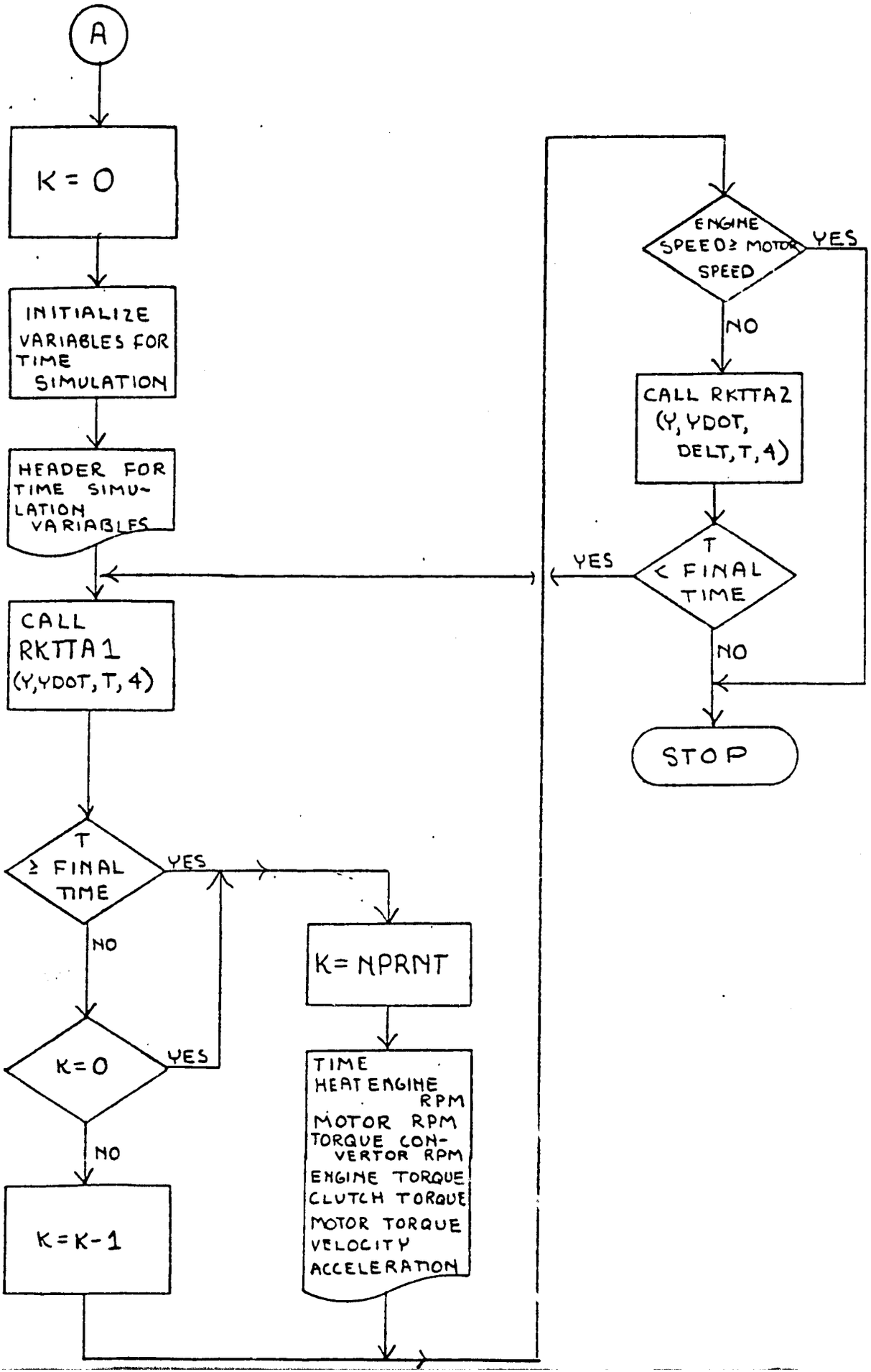
A
K = 0
INITIALIZE VARIABLES FOR TIME SIMULATION
HEADER FOR TIME SIMULATION VARIABLES
CALL RKTTA1 (Y,YDOT,T,4)
T ≥ FINAL TIME
YES
NO
K=0
YES
NO
K=K-1
K= NPRNT
TIME
HEAT ENGINE RPM
MOTOR RPM
TORQUE CONVERTOR RPM
ENGINE TORQUE
CLUTCH TORQUE
MOTOR TORQUE
VELOCITY
ACCELERATION
ENGINE SPEED ≥ MOTOR SPEED
YES
NO
CALL RKTTA2 (Y, YDOT, DELT, T, 4)
T < FINAL TIME
YES
NO
STOP

VSYS Subroutine DERIV

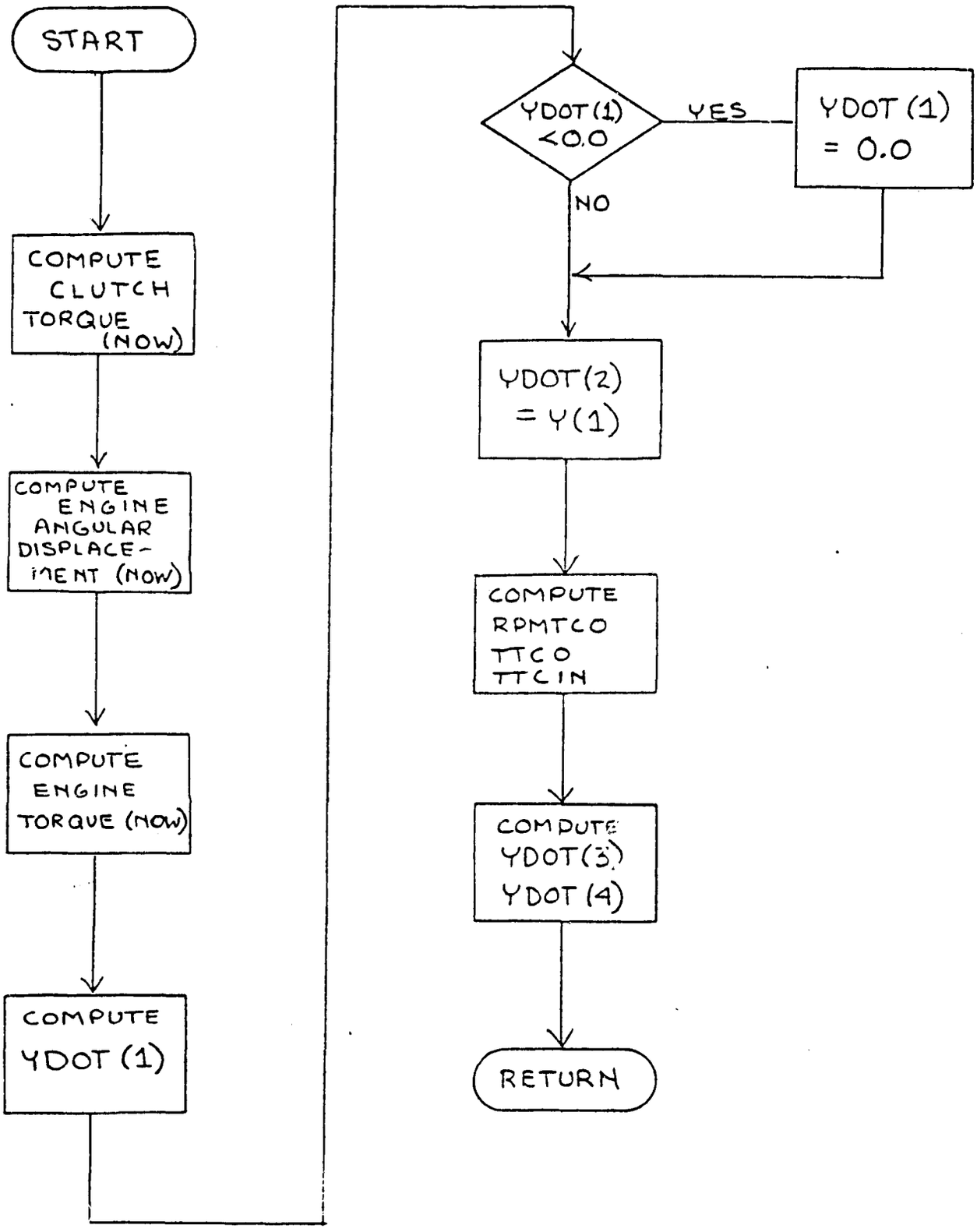

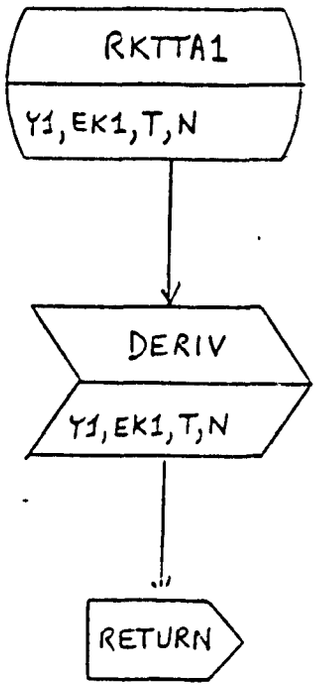
RKTTA1
Y1,EK1,T,N
DERIV
Y1,EK1,T,N
RETURN

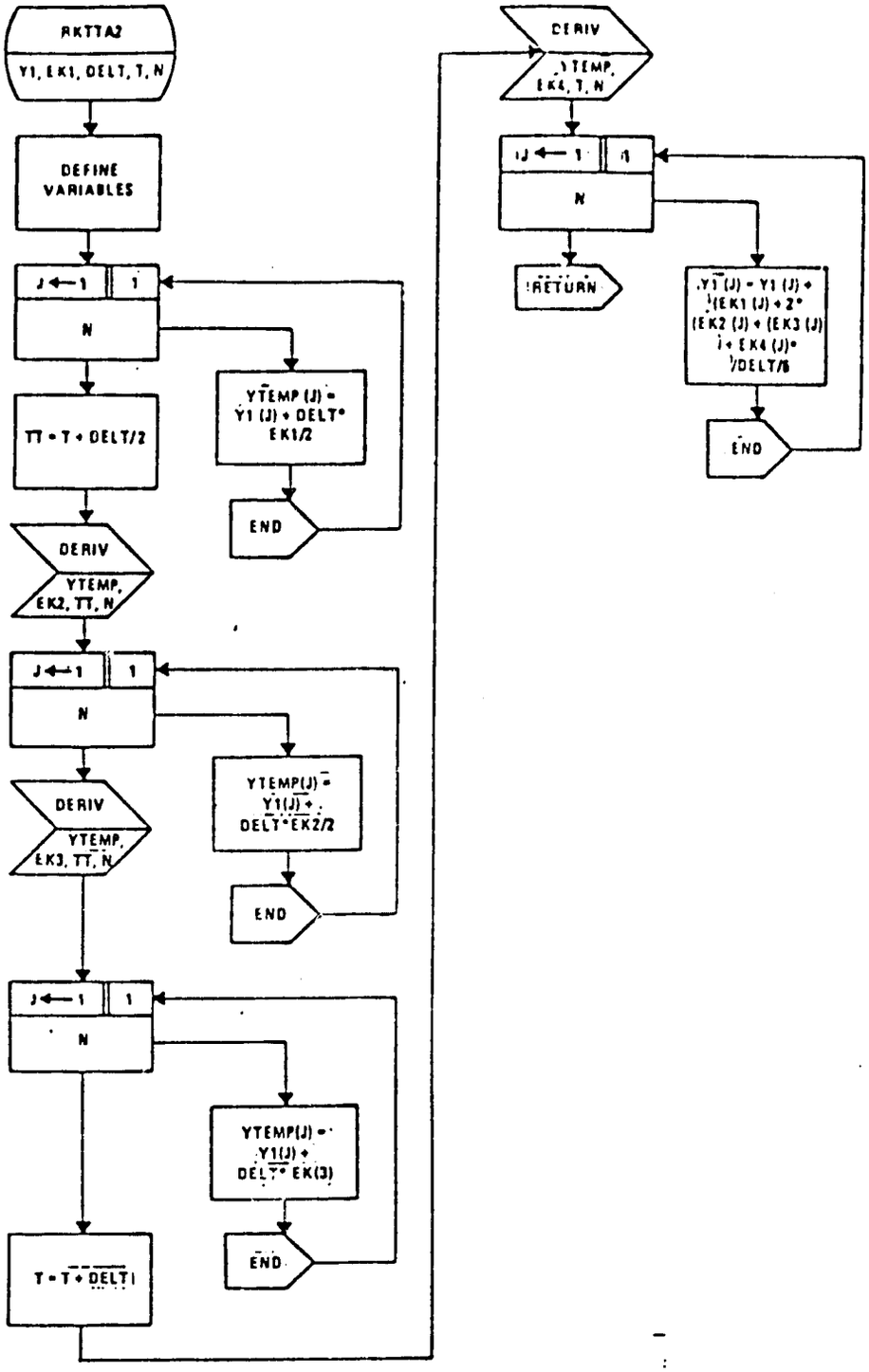
RKTTA2
Y1, EK1, DELT, T, N
DEFINE VARIABLES
J ← 1
1
N
YTEMP (J) = Y1 (J) + DELT* EK1/2
END
TT = T + DELT/2
DERIV
YTEMP, EK2, TT, N
J ← 1
1
N
YTEMP(J) = Y1(J) + DELT*EK2/2
END
DERIV
YTEMP, EK3, TT, N
J ← 1
1
N
YTEMP(J) = Y1(J) + DELT* EK(3)
END
T = T + DELTI
DERIV
YTEMP, EK4, T, N
J ← 1
1
N
RETURN
Y1 (J) = Y1 (J) + (EK1 (J) + 2* (EK2 (J) + (EK3 (J) + EK4 (J)* /DELT/6
END

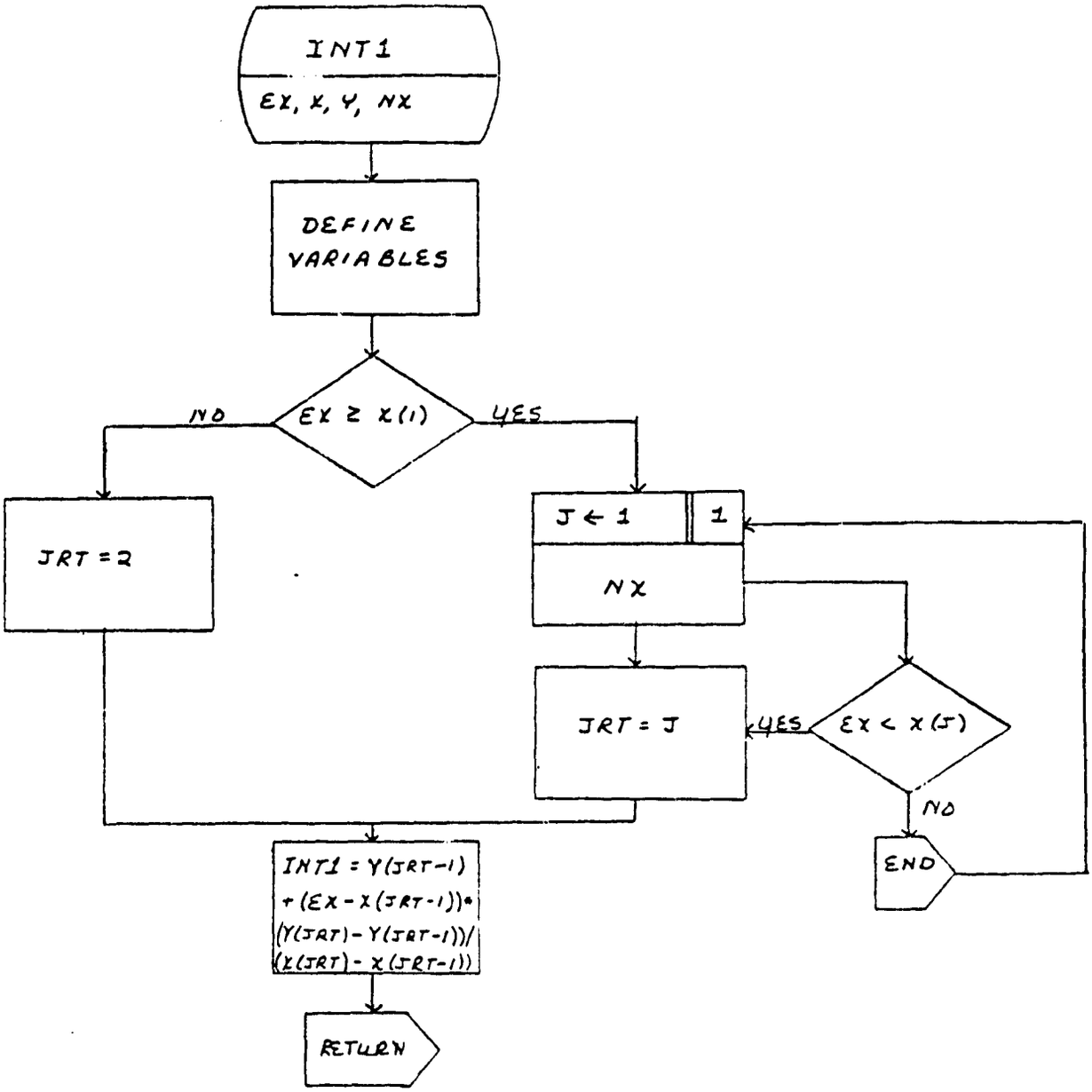
INT1
EX, X, Y, NX
DEFINE VARIABLES
EX ≥ X(1)
NO
YES
JRT = 2
J ← 1
1
NX
JRT = J
YES
EX < X(J)
NO
END
INT1 = Y(JRT-1) + (EX - X(JRT-1))* (Y(JRT) - Y(JRT-1))/ (X(JRT) - X(JRT-1))
RETURN

```
GOLETA FORTRAN 1.3 * SEMI-AUTO REL * (01-10-73)
```

ORIGINAL PAGE IS OF POOR QUALITY

```
                PROGRAM VSYS
          C
          C     THIS PROGRAM MODELS A HYBRID VEHICLE PROPULSION SYSTEM.
          C     THE ELECTRIC MOTOR IS PRODUCING TORQUE UNDER  STEADY STATE
          C     CONDITIONS AND THE HEAT ENGINE CLUTCH IS ENGAGED.
          C
          C     ALL UNITS IN MKS EXCEPT :
          C     THETA, THETAN                                (REVOLUTIONS)
          C     V, VPL                                       (KM. PER HR.)
          C     A, APL                                       (G)
          C     RPMDO, RPMTC, RPMTCO, RPMTCN                 (REV. PER MIN.)
          C     RPMHE, RPMEM                                 (REV. PER MIN.)
          C     WPL, UPL                                     (REV. PER MIN.)
          C     CM                                           (NEWTON*METERS/RPM)
          C     CT2, CD2, SHFTUP, CTIRE2, TSP, TSPAR, CDA
          C
000003          COMMON RTIRE,CD1,CD2,DRATIC,CT1(6),CT2(6),TRATIC(6),CDA,CTIRE1
               1CTIRE2,VMASS,EMUD,EMUT(6),NGEAR,CLI,GRAD,CM,HEI,EMI,
               2VMASS2,FG,V,JGEAR,
               3TSP(20),TQR(20),SPR(20),NTSP,
               4NTCL,TCL(10),TIME(10),NTHE,THE(10),THETA(10),
               5VMPS,RPMDO,TLFD,RPMTC,TLFT,RPMTCO,FA,FR,FNETO,TCO,TTC,TTCO,TSP
               6TORAT,TTCIN,SPRAT,RPMTCN,TEMO,THETAN,
               7TCLN,THEN,TEM,FNET,FAC
000003          REAL YDOT(4),Y(4),INT1
          C
          C     INPUT ENGINE DATA
          C
000003          READ 640,NTHE,HEI
000013          READ 610,(THE(J),THETA(J),J=1,NTHE)
000030          PRINT 420,HEI
000036          PRINT 820,(THE(J),THETA(J),J=1,NTHE)
          C
          C     INPUT CLUTCH DATA
          C
000057          READ 620,NTCL
000061          READ 610,(TCL(J),TIME(J),J=1,NTCL)
000076          PRINT 400
000102          PRINT 820,(TCL(J),TIME(J),J=1,NTCL)
          C
          C     INPUT MOTOR DATA
          C
000117          READ 610,CM,EMI
000127          PRINT 430,CM,EMI
          C
          C     INPUT TORQUE CONVERTOR DATA
          C
000137          READ 620,NTSP
000145          READ 610,CTCZRO,(TSP(J),TQR(J),SPR(J),J=1,NTSP)
000166          PRINT 860
000172          PRINT 865,CTCZRO
000200          PRINT 870
000204          PRINT 814,(TSP(J),TQR(J),SPR(J),J=1,NTSP)
          C
          C     INPUT TRANSMISSION DATA
```

```
          C
  0223          READ 640,NGEAR,SHFTUP
  0233          READ 610,(TRATIO(J),CT1(J),CT2(J),EMUT(J),J=1,NGEAR)
000254          PRINT 840
000260          PRINT 845
000264          PRINT 810,(TRATIO(J),CT1(J),CT2(J),EMUT(J),J=1,NGEAR)
000305          PRINT 850,SHFTUP
          C
          C     INPUT DIFFERENTIAL AND TIRE DATA
          C
000313          READ 610,DRATIO,CD1,CD2,EMUD,RTIRE,CTIRE1,CTIRE2
000335          PRINT 875
000341          PRINT 880
000345          PRINT 885,DRATIO,CD1,CD2,EMUD,RTIRE,CTIRE1,CTIRE2
          C
          C     INPUT VEHICLE DATA
          C
000367          READ 610,VMASS,DLI,CDA,GRAD,V
000405          PRINT 890,VMASS,DLI,CDA
000417          PRINT 925,GRAD,V
000427          VMASS2=VMASS+DLI/RTIRE**2
          C
          C    GRADIENT-
          C
000432          FG=9.807*VMASS*SIN(ATAN(GRAD))
          C
          C     INPUT RUN DATA
          C
000441          READ 630,DELT,TF,NPRNT
          C
          C     COMPUTE STEADY STATE CONDITIONS
          C
000452          JGEAR=1
000453          VMPS=V/3.6
000455          RPMDO=9.5492967*VMPS/RTIRE
000457          TLFD=CD1+CD2*RPMDO
000462          RPMTC=RPMDO*DRATIO
000464       15 CONTINUE
000464          TLFT=CT1(JGEAR)+CT2(JGEAR)*RPMTC
000470          RPMTCO=RPMTC*TRATIC(JGEAR)
          C
          C     UPSHIFT IF NECESSARY
          C
000472          IF((RPMTCO.LE.SHFTUP).OR.(JGEAR.GE.NGEAR))GO TO 18
000503          JGEAR=JGEAR+1
000504          GO TO 15
000505       18 CONTINUE
          C
          C     AERODYNAMIC -
          C
  0505          FA=0.6125*CDA*VMPS**2
          C
          C     ROLLING RESISTANCE -
          C
000510          FR=9.807*VMASS*(CTIRE1+CTIRE2*V)
```

```
          C
          C      ACCELERATION -
          C
000514           FNETO=FA+FG+FR
000517           TDO=FNETO*RTIRE
          C
          C      DIFFERENTIAL -
          C
000521           TTO=TDO/(EMUD*DRATIO)+TLFD
          C
          C      TRANSMISSION -
          C
000525           TTCO=TTO/(EMUT(JGEAR)*TRATIO(JGEAR))+TLFT
          C
          C      HAVE OUTPUT SPEED AND OUTPUT TORQUE.
          C
000532           TSPAR=RPMTCO/SQRT(ABS(TTCO))
000536           TQRAT=INT1(TSPAR,TSP,TQR,NTSP)
000542           TTCIN=TTCO/TQRAT
000544           SPRAT=INT1(TSPAR,TSP,SPR,NTSP)
000550           RPMTCN=RPMTCO/SPRAT
000552           TEMO=TTCIN+CM*RPMTCN
          C
          C      SET INITIAL CONDITIONS
          C
000555           K=0
  1556           T=0.0
000557           Y(1)=0.0
000560           Y(2)=0.0
000561           Y(3)=.104719755*RPMTCN
000563           Y(4)=V/3.6
000566           PRINT 700
000571        80 CONTINUE
000571           CALL RKTTA1(Y,YDOT,T,4)
000574           IF((T.GE.TF).OR.(K.EQ.0))GO TO 107
000604           K=K-1
000605           GO TO 109
000605       107 CONTINUE
000605            K=NPRNT
          C
          C      TIME TO PRINT RESULTS -
          C
000606           RPMHE=Y(1)/.104719755
000610           RPMEM=Y(3)/.104719755
000612           V=Y(4)*3.6
000614           A=YDOT(4)/9.807
000616           PRINT 886,T,RPMHE,RPMEM,RPMTCO,THEM,TCLN,TEM,V,A
000644       109 CONTINUE
          C
          C      INTEGRATE TO NEXT TIME STEP
          C
000644           IF(Y(1).GE.Y(3))GO TO 190
000647           CALL RKTTA2(Y,YDOT,DELT,T,4)
000652           IF(T.LT.TF)GO TO 80
000655       190 CONTINUE
```

```
000655      200 STOP
          C
          C     FORMAT STATEMENTS
          C
000657      400 FORMAT(1H0,*CLUTCH DATA*//5X,*CLUTCH TQ.*,6X,*TIME*)
000657      420 FORMAT(1H0,*ENGINE DATA*//5X,*ENGINE INERTIA =*,E16.6//
               15X,*ENGINE TQ.*,6X,*THETA*)
000657      430 FORMAT(1H0,*MOTOR DATA*//5X,*MOTOR SPEED DROOP =*,E16.6,4X,
               1*MOTOR INERTIA =*,E16.6)
000657      610 FORMAT(7F10.4)
000657      620 FORMAT(7I10)
000657      630 FORMAT(2F10.4,2I10)
000657      640 FORMAT(I10,6F10.4)
000657      700 FORMAT(1H0,4X,*TIME*, 7X,*ENGINE RPM*,3X,*MOTOR RPM*,4X,*TCO R
               16X,*ENGINE TQ.*,3X,*CLUTCH TQ.*,3X,
               2*MOTOR TQ.*,4X,*SPEED*,8X,*ACCEL.*)
000657      810 FORMAT(1H ,4E16.6)
000657      814 FORMAT(1H ,3E16.5)
000657      820 FORMAT(1H ,2E16.6)
000657      840 FORMAT(1H0,12HGEARBOX DATA)
000657      845 FORMAT(1H0,4X,10HGEAR RATIO,6X,22HSPIN LOSS COEFFICIENTS,10X
               1,*EFFICIENCY*)
000657      850 FORMAT(/T5,*UPSHIFT RPM = *,E16.6)
000657      860 FORMAT(1H0,21HTORQUE CONVERTOR DATA)
000657      865 FORMAT(1H0,4X,17HNI**2/TI(STALL) =,E16.6)
  0657      870 FORMAT(1H0,4X,11HNO/SQRT(TO),5X,5HTO/TI,11X,5HNC/NI)
 0657       875 FORMAT(1H0,18HAXLE AND TIRE DATA )
000657      880 FORMAT(1H0,4X,14HFIN. DR. RATIO,2X,22HSPIN LOSS COEFFICIENTS,1
               1,*EFFICIENCY*,6X,*ROLLING RADIUS*,2X,*ROLL. RESIST. COEFFICIEN
000657      885 FORMAT(1H ,7E16.6)
000657      886 FORMAT(1H ,E12.2,9E13.4)
000657      890 FORMAT(1H0,14HVEHICLE MASS =,E16.6
               1,5X,*DRIVE LINE INERTIA = *,E16.6
               2,5X,19H(DRAG COEF.)*AREA =,E16.6)
000657      925 FORMAT(1H0,16HCYCLE GRADIENT =,E10.3,
               1*STEADY STATE SPEED =*,E10.3)
000657          END
```

```
GOLETA FORTRAN 1.3 * SEMI-AUTO OFL * (01-10-73)

                SUBROUTINE DERIV(Y,YDOT,T,N)
          C
          C     Y(1) IS ENGINE SPEED
          C     Y(2) IS ENGINE ANGULAR DISPLACEMENT
          C     Y(3) IS MOTOR SPEED
          C     Y(4) IS VEHICLE SPEED
          C
000007          COMMON RTIRE,CD1,CD2,DRATIO,CT1(6),CT2(6),TRATIO(6),CDA,CTIRE
               1CTIRE2,VMASS,EMUO,EMUT(6),NGEAR,DLI,GRAD,CM,HEI,EMI,
               2VMASS2,FG,V,JGEAR,
               3TSP(20),TOR(20),SPR(20),NTSP,
               4NTCL,TCL(10),TIME(10),NTHE,THE(10),THETA(10),
               5VMPS,RPMDO,TLFO,RPMTO,TLFT,RPMTCO,FA,FR,FNETO,TDO,TTO,TTCO,TSI
               6TORAT,TTCIN,SPRAT,RPMTCN,TEMO,THETAN,
               7TCLN,THEN,TEM,FNET,FAC
000007          REAL Y(2),YDOT(2),INT1
          C
000007          TCLN=INT1(T,TIME,TCL,NTCL)
000015          THETAN=Y(2)/6.2831852
000017          THEN=INT1(THETAN,THETA,THE,NTHE)
000023          YDOT(1)=(THEN+TCLN)/HEI
          C
          C     NO NEGATIVE ENGINE ROTATIONAL ACCELERATION
          C
000031          IF(YDOT(1).LT.0.0)YDOT(1)=0.0
000034          YDOT(2)=Y(1)
  0036          RPMDO=9.5492967*Y(4)/RTIRE
000040          RPMTO=RPMDO*DRATIO
000042          RPMTCO=RPMTO*TRATIO(JGEAR)
000044          SPRAT=.104719755*RPMTCO/Y(3)
000047          TSPAR=INT1(SPRAT,SPR,TSP,NTSP)
000053          TORAT=INT1(SPRAT,SPR,TOR,NTSP)
000057          TTCO=(RPMTCO/TSPAR)**2.
000064          TTCIN=TTCO/TORAT
000066          TEM=TEMO-CM*Y(3)/.104719755
000074          YDOT(3)=(TEM-TCLN-TTCIN)/EMI
000101          TTO=TTCO*EMUT(JGEAR)*TRATIO(JGEAR)
000104          TDO=TTO*EMUO*DRATIO
000106          FNET=TDO/RTIRE
000110          FAC=FNET-FNETO
000112          YDOT(4)=FAC/VMASS2
000114          RETURN
000115          END
```

GOLETA FORTRAN 1.3 * SEMI-AUTO RFL * (01-10-73)

```
                SUBROUTINE RKTTA1(Y1,EK1,T,N)
  0007          REAL Y1(20),EK1(20)
000007          CALL DERIV(Y1,EK1,T,N)
000010          RETURN
000011          END
```

GOLETA FORTRAN 1.3 * SEMI-AUTO RFL * (01-10-73)

```
                 SUBROUTINE RKTTA2(Y1,EK1,DELT,T,N)
  010            REAL Y1(20),Y2(20),YTEMP(20),EK1(20),EK2(20),EK3(20),EK4(20)
000010           DO 50J=1,N
000011           YTEMP(J)=Y1(J)+DELT*EK1(J)/2.
000017        50 CONTINUE
000022           TT=T+DELT/2.
000024           CALL DERIV(YTEMP,EK2,TT,N)
000027           DO 60J=1,N
000034           YTEMP(J)=Y1(J)+DELT*EK2(J)/2.
000041        60 CONTINUE
000045           CALL DERIV(YTEMP,EK3,TT,N)
000050           DO 70J=1,N
000055           YTEMP(J)=Y1(J)+DELT*EK3(J)
000061        70 CONTINUE
000064           T=T+DELT
000065           CALL DERIV(YTEMP,EK4,T,N)
000070           DO 80J=1,N
000075           Y1(J)=Y1(J)+(EK1(J)+2.*(EK2(J)+EK3(J))+EK4(J))*(DELT/6.)
000107        80 CONTINUE
000111           RETURN
000112           END
```

GOLETA FORTRAN 1.3 * SEMI-AUTO PFL * (01-10-73)

```
                    REAL FUNCTION INT1(EX,X,Y,NX)
          C
          C       INT1 INTERPOLATES IN ONE VARIABLE
          C
000007              REAL X(10),Y(10)
000007              IF(EX.GE.X(1))GO TO 5
000011              JRT=2
000012              GO TO 20
000013            5 DO 10 J=1,NX
000015              IF(EX.LT.X(J))GO TO 15
000020           10 CONTINUE
000022           15 JRT=J
000024           20 INT1=Y(JRT-1)+(EX-X(JRT-1))*(Y(JRT)-Y(JRT-1))/(X(JRT)-X(JRT-1)
000040              RETURN
000041              END
```

ENGINE DATA

ENGINE INERTIA = 6.250000E-02

ENGINE TO.	THETA
-1.000000E+01	0.
-1.000000E+01	1.000000E+00
5.000000E+01	2.000000E+00
5.000000E+01	3.000000E+00

CLUTCH DATA

CLUTCH TO.	TIME
0.	0.
1.000000E+02	1.000000E+00

MOTOR DATA

MOTOR SPEED DROOP = 4.400000E-01 MOTOR INERTIA = 1.060000E-01

TORQUE CONVERTOR DATA

NI**2/TI(STALL) = 1.300400E+04

NO/SQRT(TO)	TO/TI	NO/NI
0.	2.100000E+00	0.
1.147000E+01	2.040000E+00	1.000000E-01
2.331000E+01	1.920000E+00	2.000000E-01
3.560000E+01	1.820000E+00	3.000000E-01
4.852000E+01	1.700000E+00	4.000000E-01
6.350000E+01	1.560000E+00	5.000000E-01
7.940000E+01	1.420000E+00	6.000000E-01
9.783000E+01	1.270000E+00	7.000000E-01
1.208600E+02	1.140000E+00	8.000000E-01
1.564300E+02	1.000000E+00	9.000000E-01
2.135000E+02	1.000000E+00	9.500000E-01
3.384300E+02	1.000000E+00	9.750000E-01
1.000000E+03	1.000000E+00	1.000000E+00

GEARBOX DATA

GEAR RATIO	SPIN LOSS COEFFICIENTS		EFFICIENCY
2.450000E+00	0.	0.	9.200000E-01
1.450000E+00	0.	0.	9.200000E-01
1.000000E+00	0.	0.	9.400000E-01

UPSHIFT RPM = 4.000000E+03

AXLE AND TIRE DATA

FIN. DR. RATIO	SPIN LOSS COEFFICIENTS		EFFICIENCY	ROLLING RADIUS	ROLL. RESIST. COEFFICIENTS	
4.100000E+00	0.	0.	9.600000E-01	3.050000E-01	1.000000E-02	0.

VEHICLE MASS = 2.220000E+03 DRIVE LINE INERTIA = 6.600000E+00 (DRAG COEF.)*AREA = 8.720000E-01

CYCLE GRADIENT = 0. STEADY STATE SPEED = 7.000E+01

TIME	ENGINE RPM	MOTOR RPM	TCO RPM	ENGINE TO.	CLUTCH TO.	MOTOR TO.	SPEED	ACCEL.
0.	0.	3.6561E+03	3.6193E+03	-1.0000E+01	0.	2.4377E+01	7.0000E+01	-2.6717E-15
2.00E-02	0.	3.6551E+03	3.6192E+03	-1.0000E+01	2.0000E+00	2.4870E+01	7.0000E+01	-4.0090E-04
4.00E-02	0.	3.6530E+03	3.6192E+03	-1.0000E+01	4.0000E+00	2.5757E+01	6.9999E+01	-1.0947E-03

6.00E-02	0.	3.6508E+03	3.6192E+03	-1.0000E+01	6.0000E+00	2.6747E+01	6.9998E+01	-1.7979E-03
8.00E-02	0.	3.6484E+03	3.6191E+03	-1.0000E+01	8.0000E+00	2.7796E+01	6.9997E+01	-2.4948E-03
1.00E-01	0.	3.6459E+03	3.6190E+03	-1.0000E+01	1.0000E+01	2.8862E+01	6.9995E+01	-3.1674E-03
1.20E-01	3.0559E+00	3.6434E+03	3.6189E+03	-1.0000E+01	1.2000E+01	2.9974E+01	6.9992E+01	-3.8145E-03
1.40E-01	1.2723E+01	3.6408E+03	3.6187E+03	-1.0000E+01	1.4000E+01	3.1120E+01	6.9989E+01	-4.4362E-03
1.60E-01	2.7582E+01	3.6381E+03	3.6185E+03	-1.0000E+01	1.6000E+01	3.2300E+01	6.9985E+01	-5.0331E-03
1.80E-01	4.3892E+01	3.6354E+03	3.6183E+03	-1.0000E+01	1.8000E+01	3.3512E+01	6.9982E+01	-5.6057E-03
2.00E-01	7.6394E+01	3.6325E+03	3.6181E+03	-1.0000E+01	2.0000E+01	3.4756E+01	6.9978E+01	-6.1545E-03
2.20E-01	1.1001E+02	3.6296E+03	3.6179E+03	-1.0000E+01	2.2000E+01	3.6031E+01	6.9974E+01	-6.6801E-03
2.40E-01	1.4973E+02	3.6267E+03	3.6176E+03	-1.0000E+01	2.4000E+01	3.7336E+01	6.9969E+01	-7.1834E-03
2.60E-01	1.9557E+02	3.6236E+03	3.6174E+03	-1.0000E+01	2.6000E+01	3.8671E+01	6.9964E+01	-7.6647E-03
2.80E-01	2.4752E+02	3.6205E+03	3.6171E+03	-1.0000E+01	2.8000E+01	4.0035E+01	6.9958E+01	-8.1250E-03
3.00E-01	3.0559E+02	3.6174E+03	3.6169E+03	-1.0000E+01	3.0000E+01	4.1427E+01	6.9952E+01	-8.5645E-03
3.20E-01	3.6975E+02	3.6142E+03	3.6165E+03	-1.0000E+01	3.2000E+01	4.2845E+01	6.9946E+01	-8.9840E-03
3.40E-01	4.4003E+02	3.6109E+03	3.6161E+03	-1.0000E+01	3.4000E+01	4.4289E+01	6.9939E+01	-9.3836E-03
3.60E-01	5.1643E+02	3.6075E+03	3.6158E+03	-1.0000E+01	3.6000E+01	4.5759E+01	6.9933E+01	-9.7647E-03
3.80E-01	5.9993E+02	3.6041E+03	3.6154E+03	-1.0000E+01	3.8000E+01	4.7252E+01	6.9926E+01	-1.0134E-02
4.00E-01	6.9634E+02	3.6007E+03	3.6150E+03	-1.2069E+00	4.0000E+01	4.8769E+01	6.9918E+01	-1.0492E-02
4.20E-01	8.4056E+02	3.5972E+03	3.6146E+03	1.4074E+01	4.2000E+01	5.0308E+01	6.9911E+01	-1.0814E-02
4.40E-01	1.0425E+03	3.5937E+03	3.6142E+03	3.2800E+01	4.4000E+01	5.1859E+01	6.9903E+01	-1.1131E-02
4.60E-01	1.3131E+03	3.5901E+03	3.6138E+03	5.0000E+01	4.6000E+01	5.3450E+01	6.9895E+01	-1.1433E-02
4.80E-01	1.6095E+03	3.5864E+03	3.6134E+03	5.0000E+01	4.8000E+01	5.5050E+01	6.9887E+01	-1.1720E-02
5.00E-01	1.9120E+03	3.5827E+03	3.6130E+03	5.0000E+01	5.0000E+01	5.6659E+01	6.9879E+01	-1.1994E-02
5.20E-01	2.2207E+03	3.5790E+03	3.6125E+03	5.0000E+01	5.2000E+01	5.8307E+01	6.9870E+01	-1.2255E-02
5.40E-01	2.5354E+03	3.5753E+03	3.6121E+03	5.0000E+01	5.4000E+01	5.9961E+01	6.9861E+01	-1.2594E-02
5.60E-01	2.8563E+03	3.5715E+03	3.6116E+03	5.0000E+01	5.6000E+01	6.1631E+01	6.9852E+01	-1.2741E-02
5.80E-01	3.1832E+03	3.5676E+03	3.6111E+03	5.0000E+01	5.8000E+01	6.3317E+01	6.9843E+01	-1.2945E-02
6.00E-01	3.5163E+03	3.5638E+03	3.6107E+03	5.0000E+01	6.0000E+01	6.5018E+01	6.9834E+01	-1.3137E-02

ORIGINAL PAGE IS OF POOR QUALITY

Data	Description	Units
JTHE	number of heat engine data points	—
HEI	heat engine inertia	kg m²
THE(NTHE)	heat engine torque	nt m
THETA (NTHE)	heat engine angular displacement	rev.
NTCL	number of clutch torque data points	—
TCL (NTCL)	clutch torque	nt m
TIME (NTCL)	clutch torque engagement times	sec.
CM	slope of motor torque versus r.p.m.	nt m/rpm
EMI	motor inertia	kg m²
NGEAR	number of gears	—
SHFTUP	upshift rpm.	rpm
TRATIO (NGEAR)	transmission ratios	—
CT1 (NGEAR)	friction coefficient	nt m
CT2 (NGEAR)	friction coefficient	nt m/rpm
EMUT(NGEAR)	transmission efficiency	—
DRATIO	differential ratio	—
CD1	friction coefficient	nt m
CD2	friction coefficient	nt m/rpm
EMUD	differential efficiency	—
KTIRE	tire radius	m
CTIRE1	friction coefficient	—
CTIRE2	friction coefficient	÷/km/hr
VMASS	vehicle mass	kg
DLI	drive line inertia	kg m²
CDA	drag coefficient * area	m²
GRAD	road gradient	—
V	vehicle speed	km/hr
DELT	run time interval for RKTIME	sec
TF	final time in simulation	sec
NPRNT	number of suppressed print times	—

ORIGINAL PAGE IS
OF POOR QUALITY

Variables	Description	Units
GEAR	steady state gear	———
VMPS	vehicle speed	m/sec
RPMDO	differential output r.p.m.	rpm
TLFD	differential torque loss	nt m
RPMTO	transmission output r.p.m	rpm
TLFT	transmission torque loss	nt m
RPMEM	motor rpm	rpm
FA	aerodynamic force	nt
FR	rolling resistance force	nt
FG	gradient force	nt
FNETØ	steady state net force	nt
TDO	differential output torque	nt m
TTO	transmission output torque	nt m
TSO	motor output torque	nt m
TEMØ	steady state motor torque intercept	nt m
VMASS2	effective vehicle inertial mass	kg
EMI2	effective motor inertia	kg m²
K	print skip control flag	———
T	time in simulation	sec
Y(1)	angular speed of engine	rad/sec
Y(2)	angular displacement of engine	rad
Y(3)	angular speed of motor	rad/sec
YDOT(1)	angular acceleration of engine	rad/sec²
YDOT(2)	angular speed of engine	rad/sec
YDOT(3)	angular acceleration of motor	rad/sec²
RPMHE	engine r.p.m.	rpm
RPMEM	motor r.p.m.	rpm
V	vehicle speed	km/hr
A	vehicle acceleration	g_{EARTH}

DFKIV Subroutine for VSYS2

Variables	Description	Units
TCLN	clutch torque	nt
THETAN	angular displacement of engine	rev
THEN	engine torque	nt
TEM	motor torque	nt

GENERAL RESEARCH CORPORATION

FORTRAN CODING FORM

PROGRAM	VSYS2	NAME	
ROUTINE	Input format	DATE 20 JULY 79	PAGE 1 OF 1

FORTRAN STATEMENT

0 = ZERO, 0 = ALPHA 0 | 1 = ONE, 1 = ALPHA 1 | 2 = TWO, 2 = ALPHA 2

STATEMENT NO.	CONT								SERIAL NUMBER
		NTHE	HEI						
	THE(1)	THETA(1)	...	...	THE(NTHE)	THETA(NTHE)			
		NTCL							
	TCL(1)	TIME(1)	...	...	TCL(NTCL)	TIME(NTCL)			
		CM	EMI						
		NGEAR	SHFTUP						
	TRATIO(1)	CT1(1)	CT2(1)	EMUT(1)	...	...	...		
	...	TRATIO(NGEAR), CT1(NGEAR), CT2(NGEAR), EMUT(NGEAR)							
	DRATIO	CD1	CD2	EMUD	RTIRE	CTIRE1	CTIRE2		
	VMASS	DLI	CDA	GRAD	V				
		DELT	TF	NFRNT					

C-2

FORM NO. GRC 109 REV. 1

VSYS2

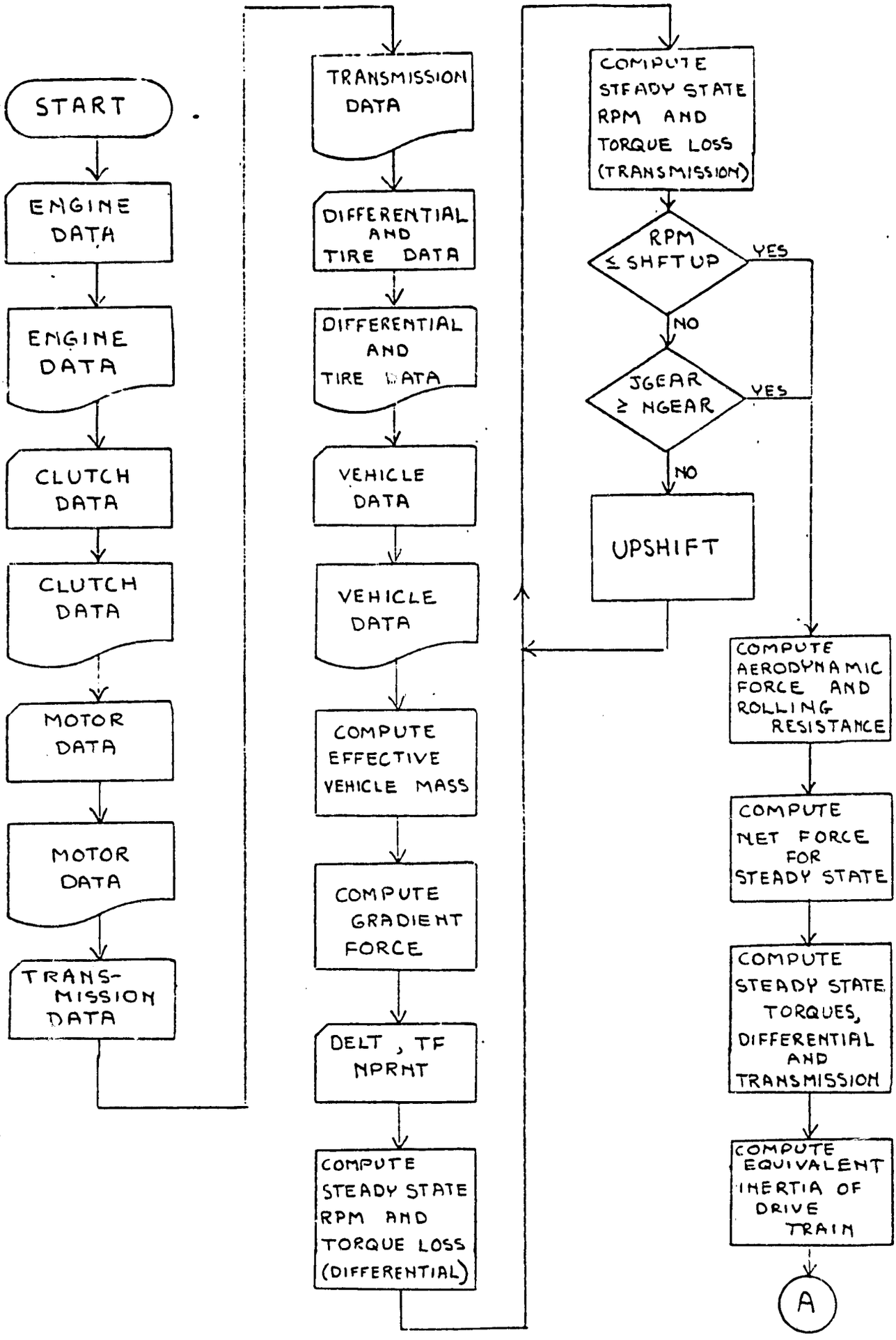
START
ENGINE DATA
ENGINE DATA
CLUTCH DATA
CLUTCH DATA
MOTOR DATA
MOTOR DATA
TRANS-MISSION DATA
TRANSMISSION DATA
DIFFERENTIAL AND TIRE DATA
DIFFERENTIAL AND TIRE DATA
VEHICLE DATA
VEHICLE DATA
COMPUTE EFFECTIVE VEHICLE MASS
COMPUTE GRADIENT FORCE
DELT , TF NPRNT
COMPUTE STEADY STATE RPM AND TORQUE LOSS (DIFFERENTIAL)
COMPUTE STEADY STATE RPM AND TORQUE LOSS (TRANSMISSION)
RPM ≤ SHFTUP
YES
NO
JGEAR ≥ NGEAR
YES
NO
UPSHIFT
COMPUTE AERODYNAMIC FORCE AND ROLLING RESISTANCE
COMPUTE NET FORCE FOR STEADY STATE
COMPUTE STEADY STATE TORQUES, DIFFERENTIAL AND TRANSMISSION
COMPUTE EQUIVALENT INERTIA OF DRIVE TRAIN
A

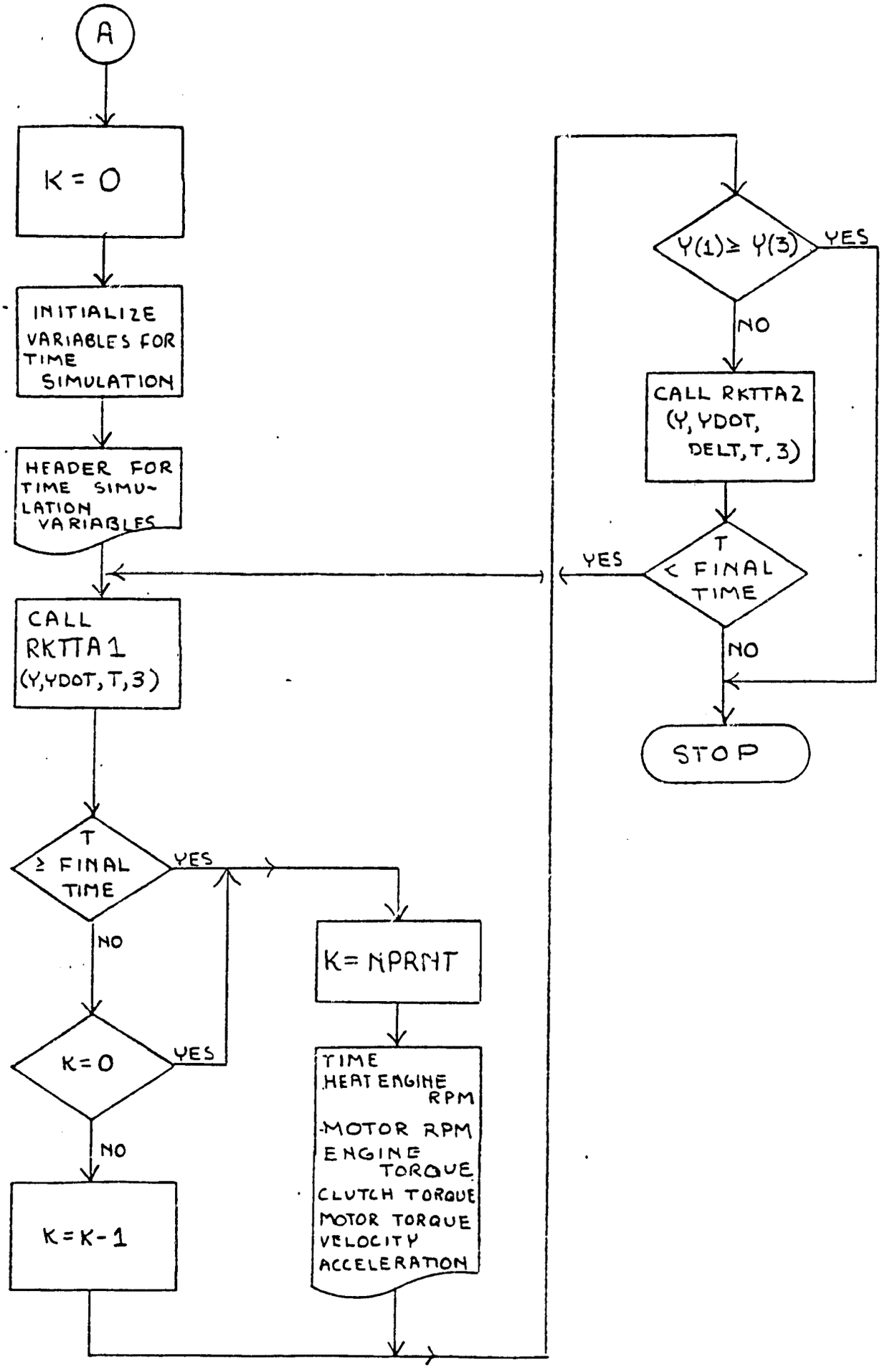
A
K = 0
INITIALIZE VARIABLES FOR TIME SIMULATION
HEADER FOR TIME SIMULATION VARIABLES
CALL RKTTA1 (Y,YDOT,T,3)
T ≥ FINAL TIME
YES
NO
K=0
YES
NO
K=K-1
K= NPRNT
TIME
HEAT ENGINE RPM
MOTOR RPM
ENGINE TORQUE
CLUTCH TORQUE
MOTOR TORQUE
VELOCITY
ACCELERATION
Y(1) ≥ Y(3)
YES
NO
CALL RKTTA2 (Y, YDOT, DELT, T, 3)
T < FINAL TIME
YES
NO
STOP

VSYSZ Subroutine DERIV

ORIGINAL PAGE IS
OF POOR QUALITY

ORIGINAL PAGE IS
OF POOR QUALITY

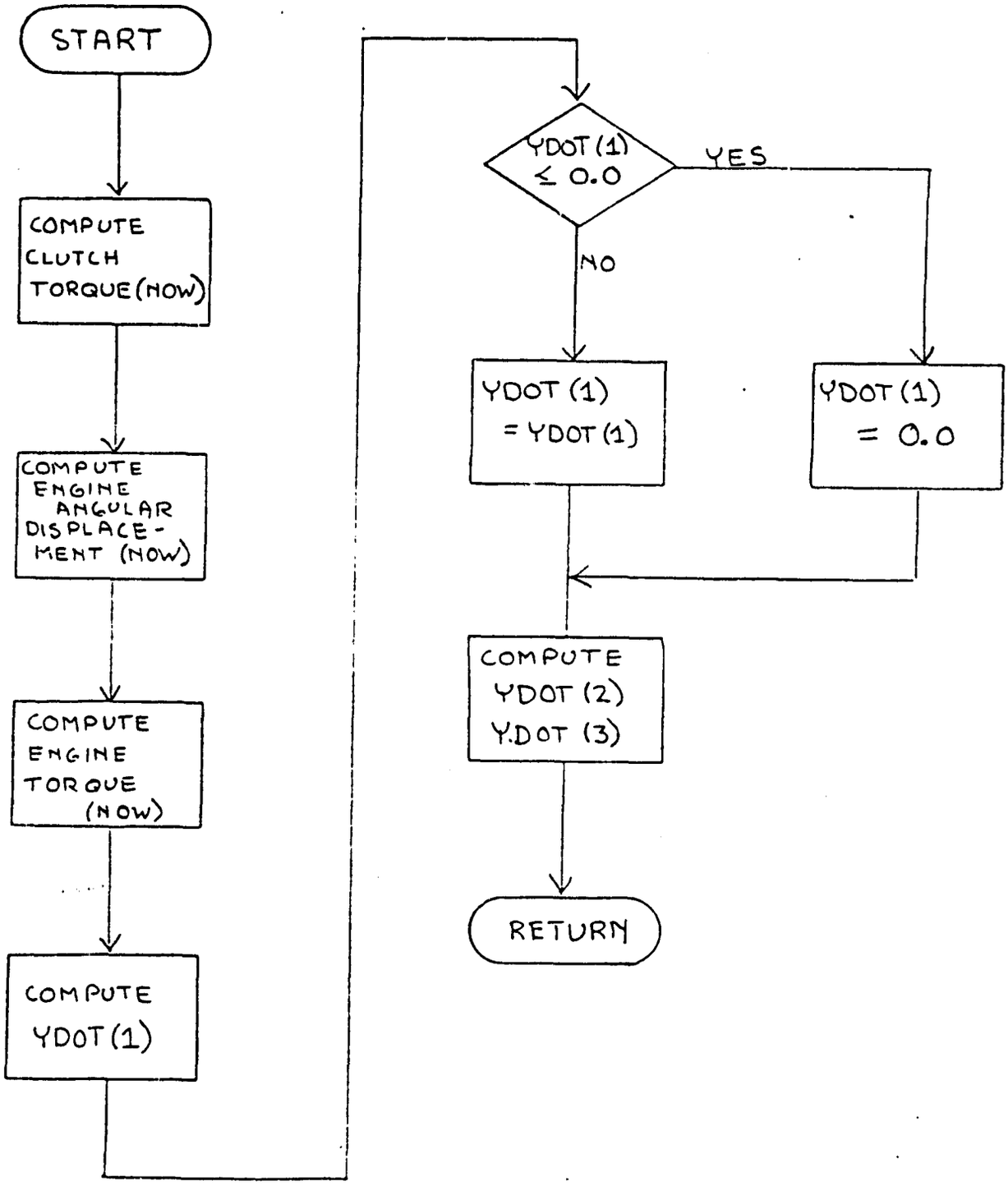

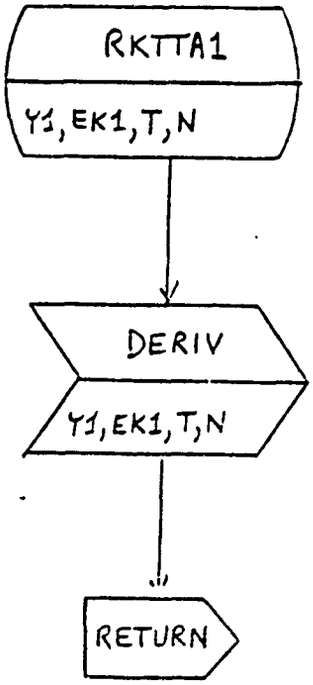
RKTTA1
Y1,EK1,T,N
DERIV
Y1,EK1,T,N
RETURN

ORIGINAL PAGE IS
OF POOR QUALITY

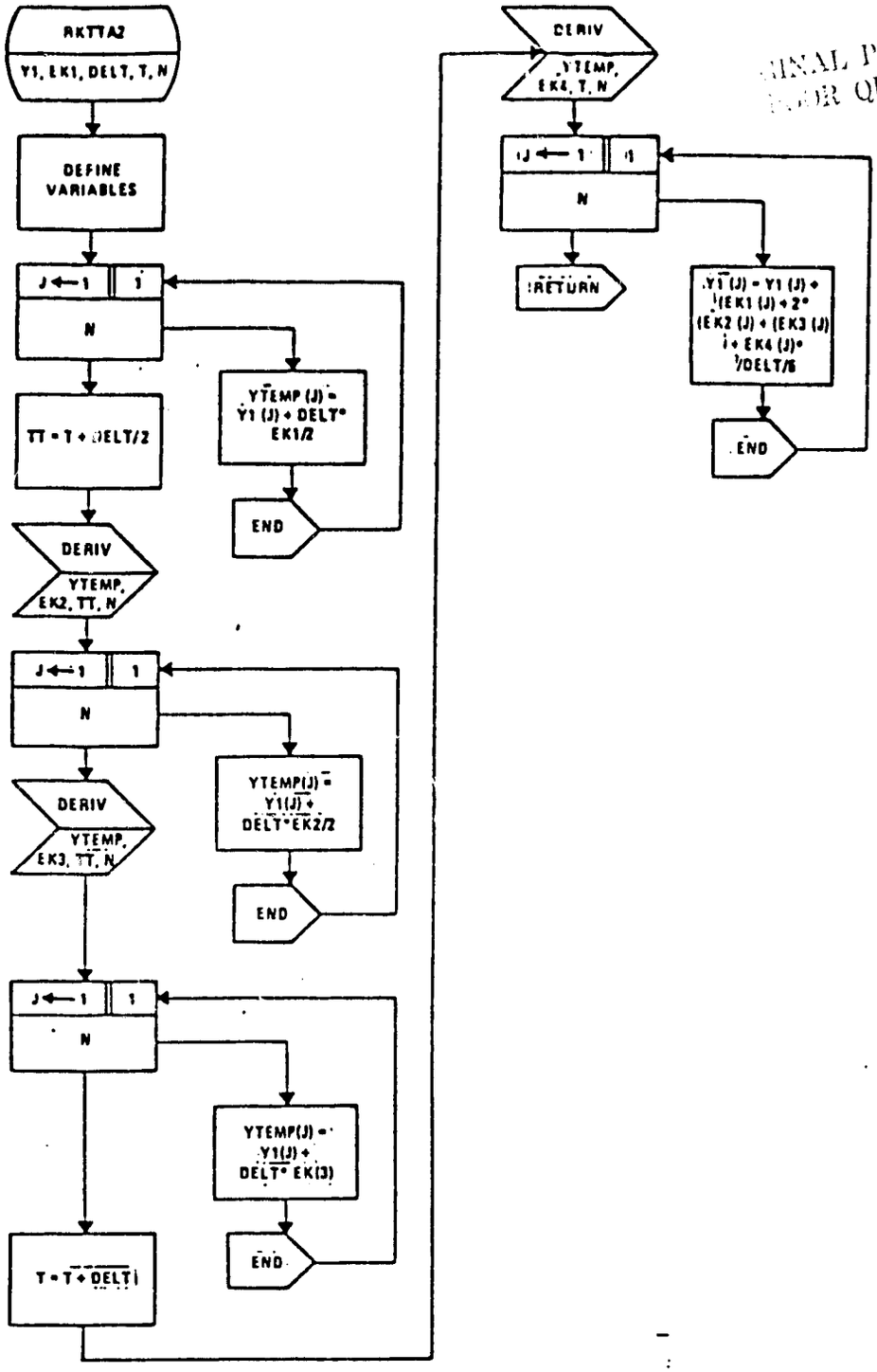

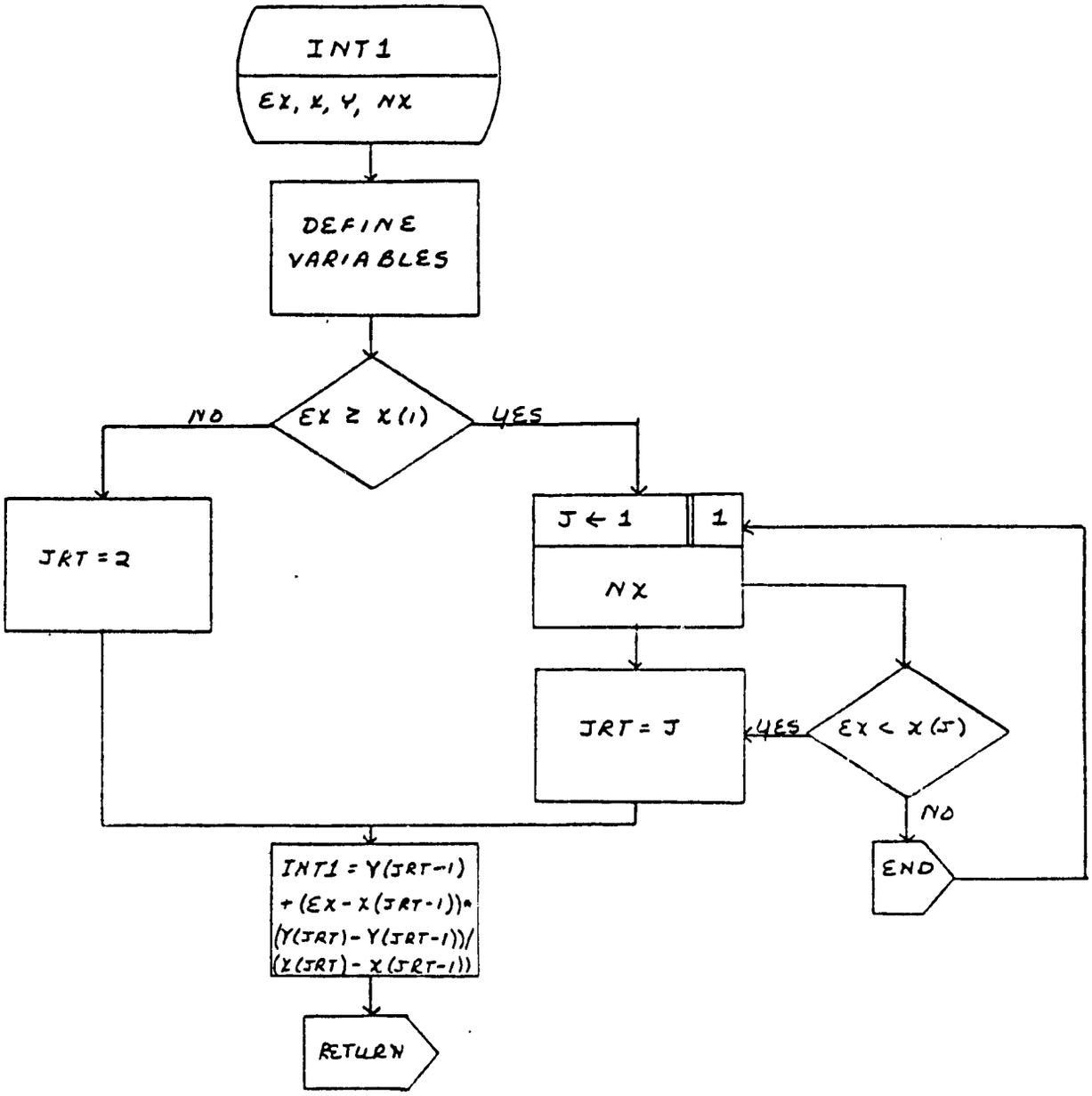
INT1
EX, X, Y, NX
DEFINE VARIABLES
EX ≥ X(1)
NO
YES
JRT = 2
J ← 1
1
NX
JRT = J
YES
EX < X(J)
NO
END
INT1 = Y(JRT-1) + (EX - X(JRT-1))* (Y(JRT) - Y(JRT-1))/ (X(JRT) - X(JRT-1))
RETURN

```
GOLETA FORTRAN 1.3 * SEMI-AUTO SFL * (01-10-73)

                PROGRAM VSYS2
          C
          C     THIS PROGRAM MODELS A HYBRID VEHICLE PROPULSION SYSTEM.
          C     THE ELECTRIC MOTOR IS PRODUCING TORQUE UNDER  STEADY STATE
          C     CONDITIONS AND THE HEAT ENGINE CLUTCH IS ENGAGED.
          C     VHYSYS2 VERSION HAS NO TORQUE CONVERTER.
          C
          C     ALL UNITS IN MKS EXCEPT :
          C     THETA, THETAN                                (REVOLUTIONS)
          C     V, VPL                                       (KM. PER HR.)
          C     A, APL                                       (G)
          C     RPMDO, RPMTO                                 (REV. PER MIN.)
          C     RPMHE, RPMEM                                 (REV. PER MIN.)
          C     WPL, UPL                                     (REV. PER MIN.)
          C     CM                                           (NEWTON*METERS/RPM)
          C     CT2, CD2, SHFTUP, CTIRE2, TSP, TSPAR, CDA
          C
000003          COMMON RTIRE,CD1,CD2,GRATIO,CT1(6),CT2(6),TRATIO(6),CDA,CTIRE1,
               1CTIRE2,VMASS,EMUO,EMUT(6),NGEAR,DLI,GRAD,CM,HEI,EMI,
               2VMASS2,FG,V,JGEAR,
               3TSO,EMI2,
               4NTCL,TCL(10),TIME(10),NTHE,THE(10),THETA(10),
               5VMPS,RPMDO,TLFO,RPMTO,TLFT,RPMTCO,FA,FR,FNETO,TDO,TTO,
               6TEMO,THETAN,
               7TCLN,THEN,TEM,FNET,FAC
000003          REAL YDOT(3),Y(3),INT1
          C
          C     INPUT ENGINE DATA
          C
000003          READ 640,NTHE,HEI
000013          READ 610,(THE(J),THETA(J),J=1,NTHE)
000030          PRINT 420,HEI
000036          PRINT 820,(THE(J),THETA(J),J=1,NTHE)
          C
          C     INPUT CLUTCH DATA
          C
000053          READ 620,NTCL
000061          READ 610,(TCL(J),TIME(J),J=1,NTCL)
000076          PRINT 400
000102          PRINT 820,(TCL(J),TIME(J),J=1,NTCL)
          C
          C     INPUT MOTOR DATA
          C
000117          READ 610,CM,EMI
000127          PRINT 430,CM,EMI
          C
          C     INPUT TRANSMISSION DATA
          C
000137          READ 640,NGEAR,SHFTUP
000147          READ 610,(TRATIO(J),CT1(J),CT2(J),EMUT(J),J=1,NGEAR)
000170          PRINT 840
000174          PRINT 845
   200          PRINT 810,(TRATIO(J),CT1(J),CT2(J),EMUT(J),J=1,NGEAR)
000221          PRINT 850,SHFTUP
          C
```

```
            C       INPUT DIFFERENTIAL AND TIRE DATA
            C
   0227             READ 610,DRATIO,CD1,CD2,EMUD,RTIRE,CTIRE1,CTIRE2
 000251             PRINT 875
 000255             PRINT 880
 000261             PRINT 885,DRATIO,CD1,CD2,EMUD,RTIRE,CTIRE1,CTIRE2
            C
            C       INPUT VEHICLE DATA
            C
 000303             READ 610,VMASS,DLI,CDA,GRAD,V
 000321             PRINT 890,VMASS,DLI,CDA
 000333             PRINT 925,GRAD,V
 000343             VMASS2=VMASS+DLI/RTIRE**2
            C
            C      GRADIENT-
            C
 000346             FG=9.807*VMASS*SIN(ATAN(GRAD))
            C
            C       INPUT RUN DATA
            C
 000355             READ 630,DELT,TF,NPRNT
            C
            C       COMPUTE STEADY STATE CONDITIONS
            C
 000366             JGEAR=1
 000367             VMPS=V/3.6
 000371             RPMDO=9.5492967*VMPS/RTIRE
   0373             TLFD=CD1+CD2*RPMDO
   0376             RPMTO=RPMDO*DRATIO
 000400          15 CONTINUE
 000400             TLFT=CT1(JGEAR)+CT2(JGEAR)*RPMTO
 000404             RPMEM=RPMTO*TRATIO(JGEAR)
            C
            C       UPSHIFT IF NECESSARY
            C
 000406             IF((RPMEM .LE.SHFTUP).OR.(JGEAR.GE.NGEAR))GO TO 18
 000417             JGEAR=JGEAR+1
 000420             GO TO 15
 000421          18 CONTINUE
            C
            C       AERODYNAMIC -
            C
 000421             FA=0.6125*CDA*VMPS**2
            C
            C       ROLLING RESISTANCE -
            C
 000424             FR=9.807*VMASS*(CTIRE1+CTIRE2*V)
            C
            C       ACCELERATION -
            C
 000430             FNETO=FA+FG+FR
 000433             TOO=FNETO*RTIRE
            C
            C       DIFFERENTIAL -
            C
```

```
000435          TTO=TDO/(EMUD*DRATIO)+TLFD
          C
          C     TRANSMISSION -
          C
000441          TSO =TTO/(EMUT(JGEAR)*TRATIO(JGEAR))+TLFT
000446          TEMO=TSO+CM*RPMFM
          C
          C     COMPUTE EQUIVALENT INERTIA OF DRIVE TRAIN
          C
000451          EMI2=EMI+(VMASS2*RTIRE**2.
               1/(EMUD*EMUT(JGEAR)*(DRATIO*TRATIO(JGEAR))**2.))
          C
          C     SET INITIAL CONDITIONS
          C
000466          K=0
000467          T=0.0
000470          Y(1)=0.0
000471          Y(2)=0.0
000472          Y(3)=.10471975E*RPMFM
000475          PRINT 700
000500       80 CONTINUE
000500          CALL RKTTA1(Y,YDOT,T,3)
000503          IF((T.GE.TF).OR.(K.EQ.0))GO TO 107
000513          K=K-1
000514          GO TO 109
000514      107 CONTINUE
  0514          K=NPRNT
          C
          C     TIME TO PRINT RESULTS -
          C
000515          RPMHE=Y(1)/.10471975E
000517          RPMEM=Y(3)/.10471975E
000521          V=Y(3)*RTIRE*3.6/(DRATIO*TRATIO(JGEAR))
000526          A=YDOT(3)*RTIRE/(DRATIO*TRATIO(JGEAR)*9.807)
000533          PRINT 886,T,RPMHE,RPMEM,THEN,TCLN,TEM,V,A
000556      109 CONTINUE
          C
          C     INTEGRATE TO NEXT TIME STEP
          C
000556          IF(Y(1).GE.Y(3))GO TO 190
000561          CALL RKTTA2(Y,YDOT,DELT,T,3)
000564          IF(T.LT.TF)GO TO 80
000567      190 CONTINUE
000567      200 STOP
          C
          C     FORMAT STATEMENTS
          C
000571      400 FORMAT(1H0,*CLUTCH DATA*//5X,*CLUTCH TO.*,6X,*TIME*)
000571      420 FORMAT(1H0,*ENGINE DATA*//5X,*ENGINE INERTIA =*,E16.6//
               15X,*ENGINE TO.*,6X,*THETA*)
000571      430 FORMAT(1H0,*MOTOR DATA*//5X,*MOTOR SPEED DROOP =*,E16.6,4X,
               1*MOTOR INERTIA =*,E16.6)
   571      610 FORMAT(7F10.4)
000571      620 FORMAT(7I10)
000571      630 FORMAT(2F10.4,2I10)
```

```
000571      640 FORMAT(I10,6F10.4)
  0571      700 FORMAT(1H0,4X,*TIME*, 7X,*ENGINE RPM*,3X,*MOTOR RPM*,
                14X,*ENGINE TQ.*,3X,*CLUTCH TQ.*,3X,
                2*MOTOR TQ.*,4X,*SPEED*,8X,*ACCEL.*)
000571      810 FORMAT(1H ,4E16.6)
000571      820 FORMAT(1H ,2E16.6)
000571      840 FORMAT(1H0,12HGEARBOX DATA)
000571      845 FORMAT(1H0,4X,10HGEAR RATIO,6X,22HSPIN LOSS COEFFICIENTS,10X
                1,*EFFICIENCY*)
000571      850 FORMAT(/TE,*UPSHIFT RPM = *,E16.6)
000571      875 FORMAT(1H0,18HAXLE AND TIRE DATA )
000571      880 FORMAT(1H0,4X,14HFIN. DR. RATIO,2X,22HSPIN LOSS COEFFICIENTS,10X
                1,*EFFICIENCY*,6X,*ROLLING RADIUS*,2X,*ROLL. RESIST. COEFFICIENTS
000571      885 FORMAT(1H ,7E16.6)
000571      886 FORMAT(1H ,F12.2,9E13.4)
000571      890 FORMAT(1H0,14HVEHICLE MASS =,E16.6
                1,5X,*DRIVE LINE INERTIA = *,E16.6
                2,5X,19H(DRAG COEF.)*AREA =,E16.6)
000571      925 FORMAT(1H0,16HCYCLE GRADIENT =,E10.3,
                1*STEADY STATE SPEED =*,E10.3)
000571          END
```

```
                SUBROUTINE DERIV(Y,YDOT,T,N)
          C
          C     Y(1) IS ENGINE SPEED
          C     Y(2) IS ENGINE ANGULAR DISPLACEMENT
          C     Y(3) IS MOTOR SPEED
          C
000007          COMMON RTIRE,CD1,CD2,DRATIO,CT1(6),CT2(6),IRATIO(6),CDA,CTIRE1,
               1CTIRE2,VMASS,EMUD,EMUT(6),NGEAR,DLI,GRAD,CM,HEI,EMI,
               2VMASS2,FG,V,JGEAR,
               3TSO,EMI2,
               4NTCL,TCL(10),TIME(10),NTHE,THE(10),THETA(10),
               5VMPS,RPMDO,TLFO,RPMTO,TLFT,RPMTCO,FA,FR,FNETO,TCO,TTO,
               6TEMO,THETAN,
               7TCLN,THEN,TEM,FNET,FAC
000007          REAL Y(2),YDOT(2),INT1
          C
000007          TCLN=INT1(T,TIME,TCL,NTCL)
000015          THETAN=Y(2)/6.2831852
000017          THEN=INT1(THETAN,THETA,THE,NTHE)
000023          YDOT(1)=(THEN+TCLN)/HEI
          C
          C     NO NEGATIVE ENGINE ROTATIONAL ACCELERATION
          C
000031          YDOT(1)=AMAX1(0.0,YDOT(1))
000035          YDOT(2)=Y(1)
000036          TEM=TEMO-CM*Y(3)/.104719755
  0042          YDOT(3)=(TEM-TCLN-TSO)/EMI2
  0047          RETURN
000047          END
```

GOLETA FORTRAN 1.3 * SEMI-AUTO RFL * (01-10-73)

```
                SUBROUTINE RKTTA1(Y1,EK1,T,N)
  000007        REAL Y1(20),EK1(20)
  000007        CALL DERIV(Y1,EK1,T,N)
  000010        RETURN
  000011        END
```

ORIGINAL PAGE IS
OF POOR QUALITY

ORIGINAL PAGE IS
OF POOR QUALITY

```
                SUBROUTINE RKTTA2(Y1,EK1,DELT,T,N)
 10010          REAL Y1(20),Y2(20),YTEMP(20),EK1(20),EK2(20),EK3(20),EK4(20)
 000010         DO 50J=1,N
 000011         YTEMP(J)=Y1(J)+DELT*EK1(J)/2.
 000017      50 CONTINUE
 000022         TT=T+DELT/2.
 000024         CALL DERIV(YTEMP,EK2,TT,N)
 000027         DO 60J=1,N
 000034         YTEMP(J)=Y1(J)+DELT*EK2(J)/2.
 000041      60 CONTINUE
 000045         CALL DERIV(YTEMP,EK3,TT,N)
 000050         DO 70J=1,N
 000055         YTEMP(J)=Y1(J)+DELT*EK3(J)
 000061      70 CONTINUE
 000064         T=T+DELT
 000065         CALL DERIV(YTEMP,EK4,T,N)
 000070         DO 80J=1,N
 000075         Y1(J)=Y1(J)+(EK1(J)+2.*(EK2(J)+EK3(J))+EK4(J))*(DELT/6.)
 000107      80 CONTINUE
 000111         RETURN
 000112         END
```

GOLETA FORTRAN 1.3 * SEMI-AUTO REL * (01-10-73)

```
                REAL FUNCTION INT1(EX,Y,Y,NX)
          C
          C     INT1 INTERPOLATES IN ONE VARIABLE
          C
000007          REAL X(10),Y(10)
000007          IF(EX.GE.X(1))GO TO 5
000011          JRT=2
000012          GO TO 20
000013        5 DO 10 J=1,NX
000015          IF(EX.LT.X(J))GO TO 15
000020       10 CONTINUE
000022       15 JRT=J
000024       20 INT1=Y(JRT-1)+(EX-X(JRT-1))*(Y(JRT)-Y(JRT-1))/(X(JRT)-X(JRT-1))
000040          RETURN
000041          END
```

ORIGINAL PAGE IS
OF POOR QUALITY

ENGINE DATA

ENGINE INERTIA = 6.250000E-02

ENGINE TQ.	THETA
-1.000000E+01	0.
-1.000000E+01	1.000000E+00
5.000000E+01	2.000000E+00
5.000000E+01	3.000000E+00

CLUTCH DATA

CLUTCH TQ.	TIME
0.	0.
1.000000E+02	1.000000E+00

MOTOR DATA

MOTOR SPEED DROOP = 4.400000E-01 MOTOR INERTIA = 1.000000E-01

GEARBOX DATA

GEAR RATIO	SPIN LOSS COEFFICIENTS		EFFICIENCY
2.450000E+03	0.	0.	9.200000E-01
1.450000E+00	0.	0.	9.200000E-01
1.000000E+00	0.	0.	9.400000E-01

UPSHIFT RPM = 4.000000E+03

AXLE AND TIRE DATA

FIN. DR. RATIO	SPIN LOSS COEFFICIENTS		EFFICIENCY	ROLLING RADIUS	ROLL. RESIST. COEFFICIENTS	
4.100000E+00	0.	0.	9.600000E-01	3.050000E-01	1.000000E-02	0.

VEHICLE MASS = 2.220000E+03 DRIVE LINE INERTIA = 5.000000E+00 DRAG COEF.*AREA = 9.720000E-01

CYCLE GRADIENT = 0. STEADY STATE SPEED = 7.000E+01

TIME	ENGINE RPM	MOTOR RPM	ENGINE TQ.	CLUTCH TQ.	MOTOR TQ.	SPEED	ACCEL.
0.	0.	3.6193E+03	-1.0000E+01	0.	2.4377E+01	7.0000E+01	-3.4311E-16
2.00E-02	0.	3.6192E+03	-1.0000E+01	2.0000E+00	2.4389E+01	6.9999E+01	-1.4999E-03
4.00E-02	0.	3.6191E+03	-1.0000E+01	4.0000E+00	2.4425E+01	6.9998E+01	-2.9818E-03
6.00E-02	0.	3.6190E+03	-1.0000E+01	6.0000E+00	2.4485E+01	6.9995E+01	-4.4658E-03
8.00E-02	0.	3.6189E+03	-1.0000E+01	8.0000E+00	2.4568E+01	6.9992E+01	-5.8921E-03
1.00E-01	0.	3.6185E+03	-1.0000E+01	1.0000E+01	2.4674E+01	6.9987E+01	-7.3211E-03
1.20E-01	3.0558E+00	3.6183E+03	-1.0000E+01	1.2000E+01	2.4803E+01	6.9981E+01	-8.7328E-03
1.40E-01	1.2223E+01	3.6179E+03	-1.0000E+01	1.4000E+01	2.4954E+01	6.9975E+01	-1.0129E-02
1.60E-01	2.7502E+01	3.6175E+03	-1.0000E+01	1.6000E+01	2.5128E+01	6.9957E+01	-1.1505E-02
1.80E-01	4.8992E+01	3.6171E+03	-1.0000E+01	1.8000E+01	2.5324E+01	6.9958E+01	-1.2867E-02
2.00E-01	7.5304E+01	3.6166E+03	-1.0000E+01	2.0000E+01	2.5541E+01	6.9949E+01	-1.4212E-02
2.20E-01	1.1001E+02	3.6161E+03	-1.0000E+01	2.2000E+01	2.5780E+01	6.9939E+01	-1.5540E-02
2.40E-01	1.4973E+02	3.6155E+03	-1.0000E+01	2.4000E+01	2.6041E+01	6.9927E+01	-1.6853E-02
2.60E-01	1.9557E+02	3.6149E+03	-1.0000E+01	2.6000E+01	2.6322E+01	6.9915E+01	-1.8150E-02
2.80E-01	2.4762E+02	3.6141E+03	-1.0000E+01	2.8000E+01	2.6624E+01	6.9901E+01	-1.9431E-02
3.00E-01	3.1554E+02	3.6134E+03	-1.0000E+01	3.0000E+01	2.5946E+01	6.9887E+01	-2.0697E-02
3.20E-01	3.9075E+02	3.6125E+03	-1.0000E+01	3.2000E+01	2.7289E+01	6.9872E+01	-2.1946E-02
3.40E-01	4.4007E+02	3.6119E+03	-1.0000E+01	3.4000E+01	2.7651E+01	6.9856E+01	-2.3179E-02
3.60E-01	5.1643E+02	3.6109E+03	-1.0000E+01	3.6000E+01	2.8033E+01	6.9839E+01	-2.4404E-02
3.80E-01	5.9993E+02	3.6100E+03	-1.0000E+01	3.8000E+01	2.8435E+01	6.9822E+01	-2.5610E-02
4.00E-01	6.9534E+02	3.6091E+03	-1.0000E+01	4.0000E+01	2.8856E+01	6.9803E+01	-2.6801E-02
4.20E-01	8.4056E+02	3.6081E+03	1.4374E+01	4.2000E+01	2.9296E+01	6.9784E+01	-2.7978E-02

ORIGINAL PAGE IS
OF POOR QUALITY

4.40E-01	1.0425E+03	3.6077E+03	3.7900E+01	4.4000E+01	2.9755E+01	6.9764E+01	-2.9141E-02
4.60E-01	1.3171E+03	3.6059E+03	5.0000E+01	4.6000E+01	3.0232E+01	6.9747E+01	-3.0290E-02
4.80E-01	1.6095E+03	3.6049E+03	5.0000E+01	4.8000E+01	3.0729E+01	6.9721E+01	-3.1425E-02
5.00E-01	1.9120E+03	3.6037E+03	5.0000E+01	5.0000E+01	3.1242E+01	6.9698E+01	-3.2546E-02
5.20E-01	2.2207E+03	3.6024E+03	5.0000E+01	5.2000E+01	3.1773E+01	6.9675E+01	-3.3654E-02
5.40E-01	2.5354E+03	3.6012E+03	5.0000E+01	5.4000E+01	3.2323E+01	6.9651E+01	-3.4749E-02
5.60E-01	2.8563E+03	3.5999E+03	5.0000E+01	5.6000E+01	3.2890E+01	6.9626E+01	-3.5830E-02
5.80E-01	3.1832E+03	3.5986E+03	5.0000E+01	5.8000E+01	3.3474E+01	6.9600E+01	-3.6899E-02
6.00E-01	3.5163E+03	3.5972E+03	5.0000E+01	6.0000E+01	3.4075E+01	6.9574E+01	-3.7954E-02

ORIGINAL PAGE IS
OF POOR QUALITY

C1.3 CRASH SIMULATION PROGRAM (CRASH)

1. Program Description

CRASH is a program which simulates the impact response of a general non-linear spring/mass system. The masses are constrained to translation along one axis; i.e., planar or 3 dimensional translation and notations are not simulated. The springs which interconnect the masses can be nonlinear and have different characteristics in unloading than they do in loading; i.e., they can dissipate energy in heat as well as storing it. The equation of motion of the masses are solved using a Runge-Kutta integration routine. By appropriately modelling a vehicle (or vehicles) as such a spring/mass system, the vehicle response in a barrier or vehicle-to-vehicle impact can be simulated.

A 3.2 Equations

Equation of Motion for i^{th} Mass

$$M_i \frac{d^2x_i}{dt^2} = \sum_{j \neq i} F_{ij} - \sum_{i \neq j} F_{ji} \quad ; \quad \begin{matrix} i=1,\cdots n, \\ j=0,\cdots n \end{matrix}$$

where n is the number of masses in the system and F_{ij} is the force generated by a spring coupling mass i to mass j. The sign convention on the F_{ij} is such that $F_{ij} > 0$ if it is in a direction to accelerate mass i and decelerate mass j. See Figure A 3-1 for an example of the nomenclature and sign conventions.

Generation of Spring Forces

$$F_i = \begin{cases} f_{ij}\ (x_j - x_i), \text{ loading with } x_j - x_i \geq x_{sav} \\ \text{MAX}\ (\ 0, f\ (x_{sav}) - \frac{dF}{dx}\ (x_{sav} - (x_j - x_i)) \quad , \\ \qquad \text{unloading or loading with } x_j - x_i < x_{sav} \end{cases}$$

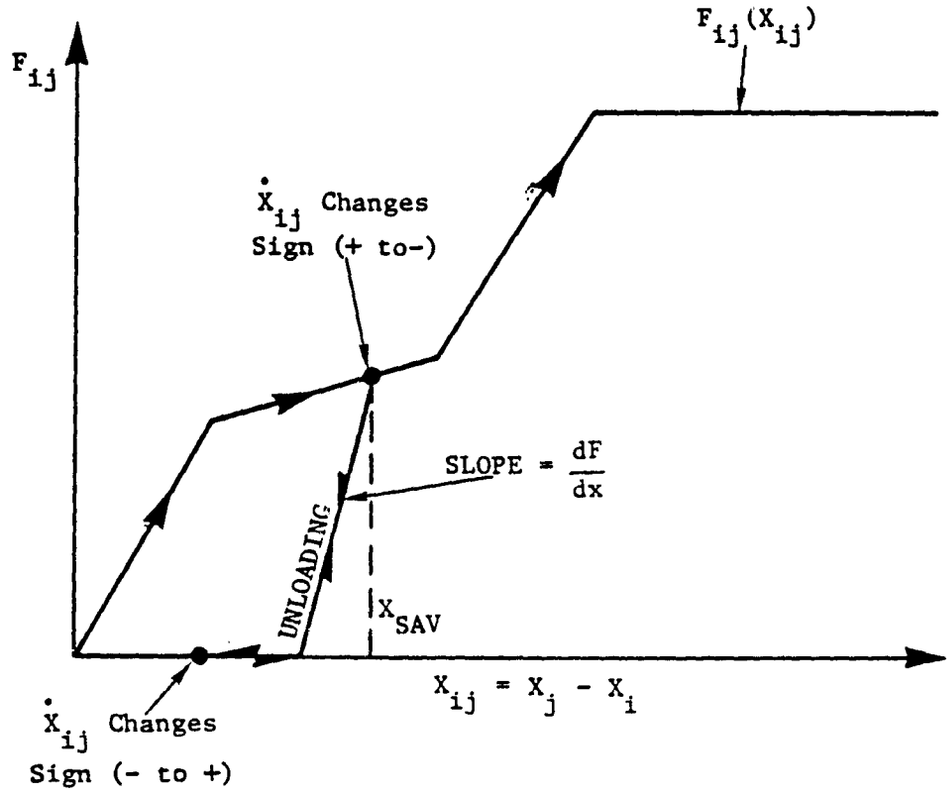

Figure A3-1 Generation of Generalized Non-Linear Spring Forces

where x_{sav} is the last value of $x_j - x_i$ at which unloading started (i.e., $\dot{x}_j - \dot{x}_i$ changed sign from positive to negative) and $\frac{dF}{dx}$ is the unloading slope. See Figure A for an illustration of how F_{ij} is generated. Note that, if there is a spring element between M_i and M_j such that the force can go negative for negative values of deflection, it is necessary to represent it as two springs. For example, the coupling between M_1 and M_2 in Figure A would be represented by two functions f_{12} and f_{21}.

PARAMETERS		UNITS	DESCRIPTION
EQUATION	PROGRAM		
	NCASE		NUMBER OF CASES
	NMASS		NUMBER OF MASSES
	NCOUP		NUMBER OF COUPLINGS
	DAF		DYNAMIC AMPLICATION FACTOR
m	EMASS(10)	KG	MASS OF ELEMENTS
	NCOUPTB(50,3)		COLUMNS 1 AND 2 CONTAIN MASS NUMBERS OF COUPLED MASSES, THIRD COLUMN CONTAINS NUMBER OF VALUES IN F AND X ARRAYS FOR SPECIFIED COUPLING
x_i	X(50,10)	m	DEFLECTION VALUES FOR EACH COUPLING
F_i	F(50,10)	N/m	FORCE VALUES FOR FORCE DEFLECTION CHARACTERISTICS FOR EACH COUPLING
dF/dx	SLOPE(50)		SLOPE OF LINE ALONG WHICH UN-LOADING OCCURS FOR EACH COUPLING
	TF	SEC	FINAL TIME
	DELT	SEC	TIME INCREMENT
	NPRNT		FREQUENCY OF OUTPUT PRINTING (IN RELATION TO TIME STEP)
	VØ	m/sec	INITIAL VELOCITY

VARIABLES		UNITS	DESCRIPTION
EQUATION	PROGRAM		
	DDELX	m/sec	INSTATANEOUS VALUE OF VELOCITY FOR EACH COUPLI
$x_j - x_i$	DELX(50)	m	INSTATANEOUS VALUE OF DEFORMATION FOR EACH COUPLING
	DY(1,3,...19)	m/sec	VELOCITY OF MASS (1, 2, ... 10)
	Y1(2,4,...20)	m/sec	
d^2x_i/dt	DY(2,4,...20)	m/sec^2	ACCELERATION OF MASS (1, 2, ... 10)
$f(x_{SAV})$	FSAV(50)	n/m	VALUE OF FORCE AT POINT WHERE UNLOADING BEGINS
	FT(50)	n/m	INSTANTANEOUS VALUE OF FORCE EXERTED FOR EACH COUPLING
	IFLAG(50)		FLAGS OCCURRENCE OF UNLOADING FOR EACH COUPLING (UNLOADING = -1, LOADING = 1)
	K1 (20)		STORAGE FOR VARIABLES OF INTEGRATI
	NMASST		2* NUMBER OF MASSES
	NTIMES		NUMBER OF TIME STEPS
x_{SAV}	XSAV(50)	m	VALUE OF DEFORMATION AT WHICH UNLOADING BEGINS
	Y1(1,3,...19)	m	DISPLACEMENT OF MASS (1, 2, ... 10)

GENERAL RESEARCH CORPORATION

FORTRAN CODING FORM

PROGRAM	CRASH	NAME	
ROUTINE	Input FORMAT	DATE	PAGE OF

FORTRAN STATEMENT — 0 = ZERO, 0 = ALPHA 0; 1 = ONE, 1 = ALPHA 1; 2 = TWO, Z = ALPHA Z

TYPE	STATEMENT NO.	CONT	FORTRAN STATEMENT (columns 7–72)	SERIAL NUMBER
		N	MASS NCOUP	
			DAF	
	EMA	S	S(1) ... EMASS(NMASS)	
NCOUP	T	B	(1,1) ... NCOUPTB(3,NCOUP)	
		X	(1,1) F(1,1) ... X(NCOUP,NCOUPTB(NCOUP,3)), F(NCOUP,NCOUPTB(NCOUP,3))	
	SLO	P	E(1) ... SLOPE(NCOUP)	
			TF DELT	
		N	PRINT	
			YØ	
			NPM N3PM	
	NPMA	S	S(1) ... NPMASS(NPM)	

CRASH

ORIGINAL PAGE IS
OF POOR QUALITY

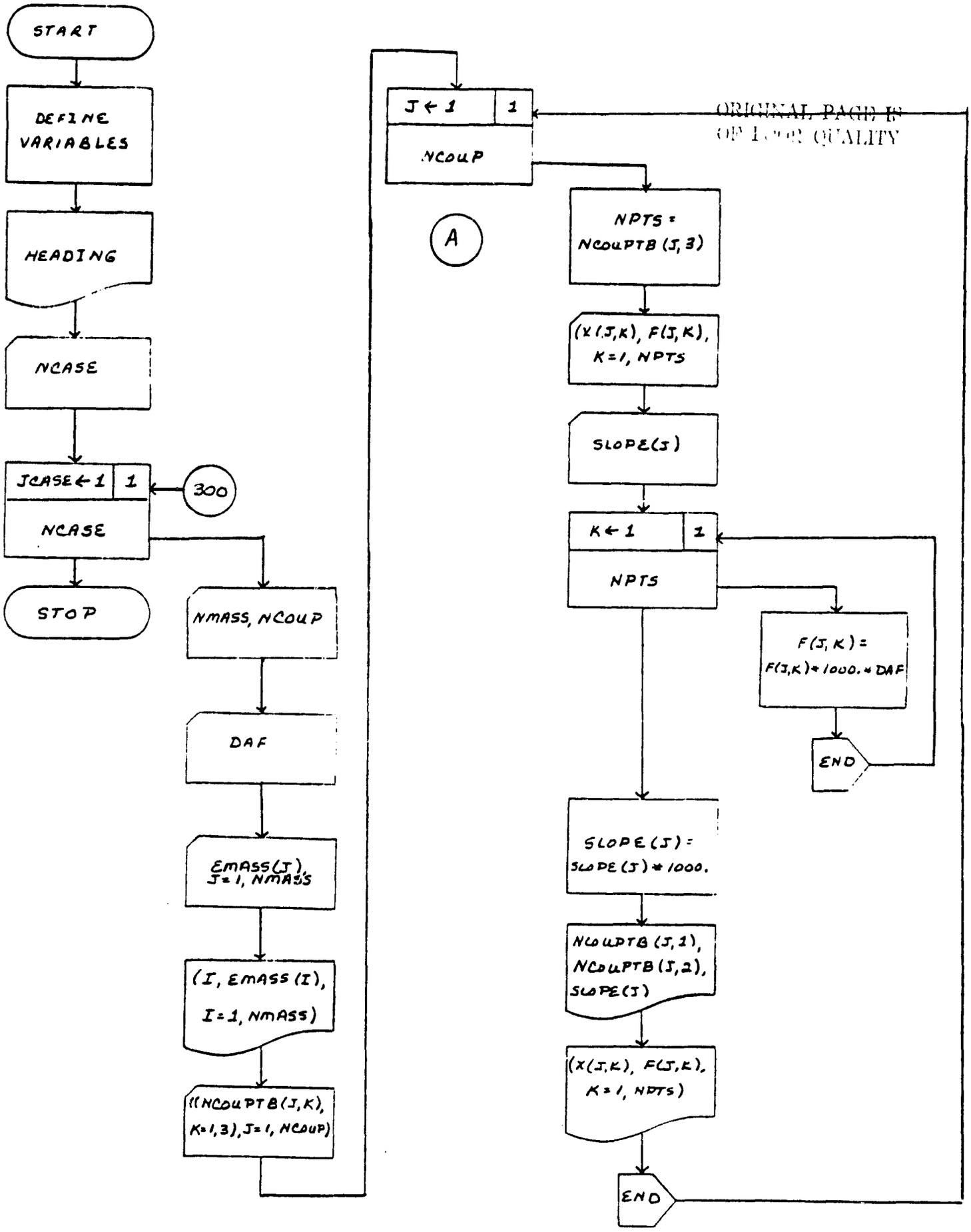

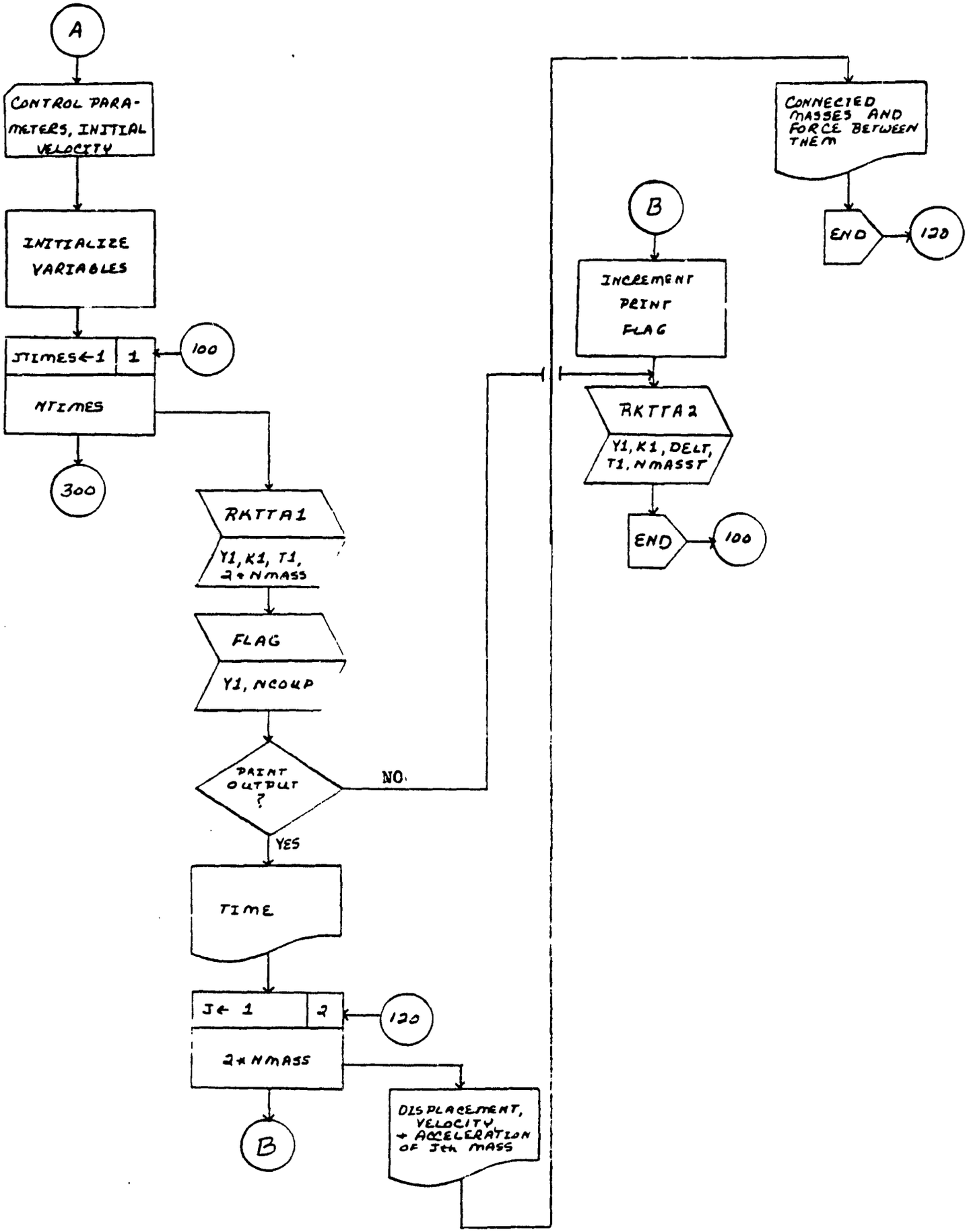
A
CONTROL PARAMETERS, INITIAL VELOCITY
INITIALIZE VARIABLES
JTIMES←1
1
100
NTIMES
300
RKTTA1
Y1, K1, T1, 2*NMASS
FLAG
Y1, NCOUP
PRINT OUTPUT ?
NO
YES
TIME
J← 1
2
120
2*NMASS
B
DISPLACEMENT, VELOCITY + ACCELERATION OF Jth MASS
CONNECTED MASSES AND FORCE BETWEEN THEM
END
120
B
INCREMENT PRINT FLAG
RKTTA2
Y1, K1, DELT, T1, NMASST
END
100

REAL FUNCTION ENTP

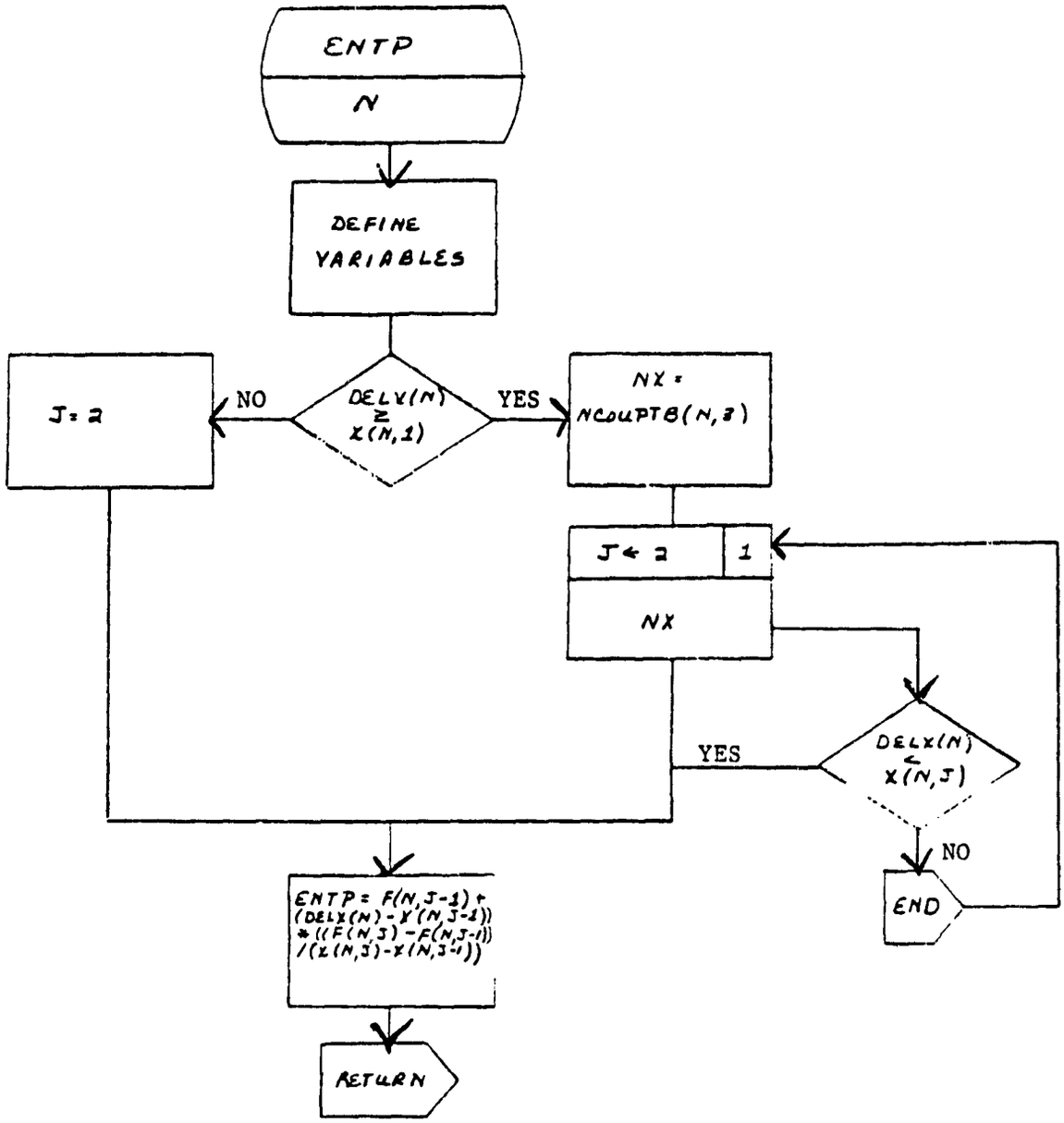

SUBROUTINE FLAG

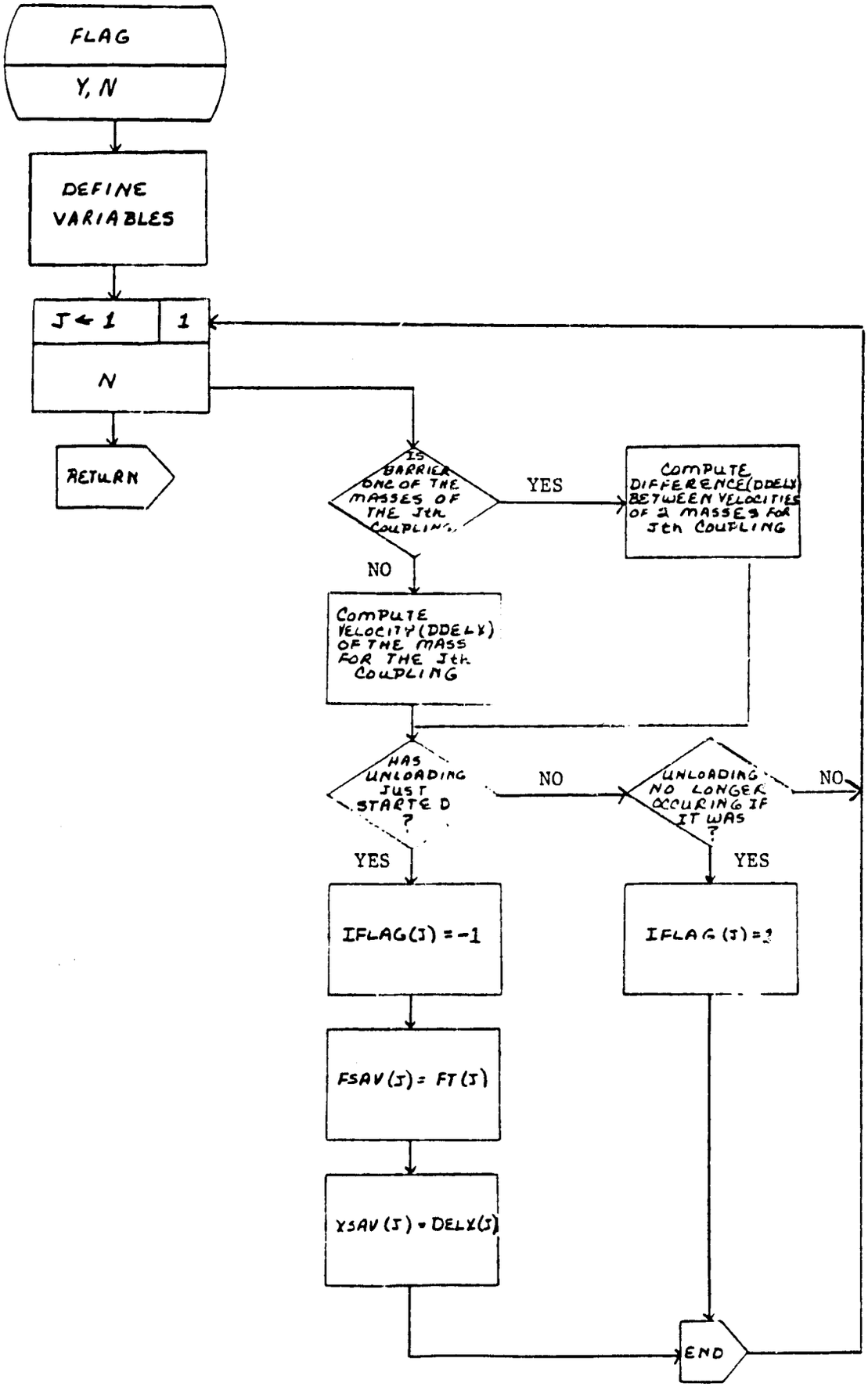

SUBROUTINE DERIV

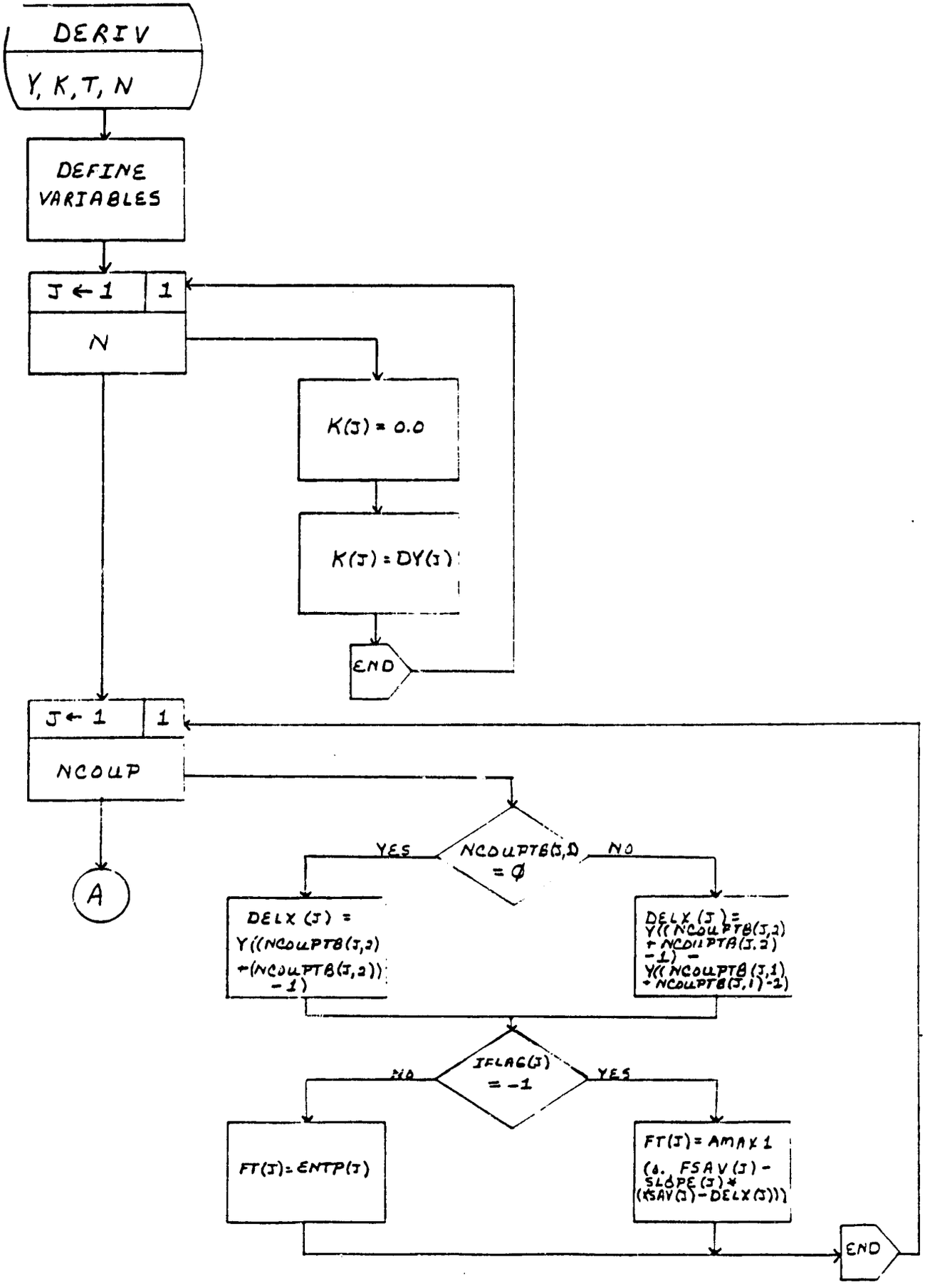

DERIV (cont'd)

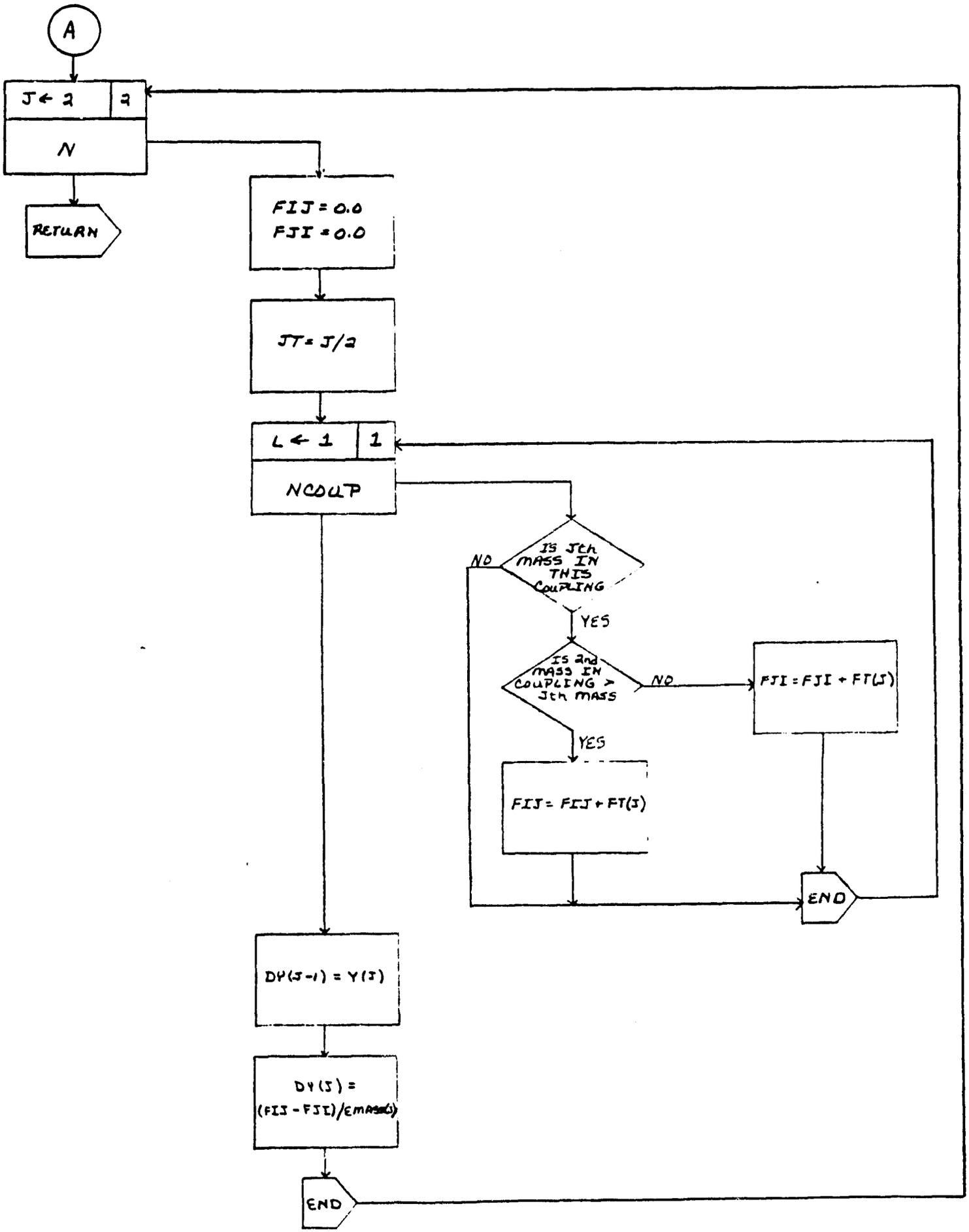
A
J ← 2
2
N
RETURN
FIJ = 0.0
FJI = 0.0
JT = J/2
L ← 1
1
NCOUP
IS Jth MASS IN THIS COUPLING
NO
YES
IS 2nd MASS IN COUPLING > Jth MASS
NO
YES
FJI = FJI + FT(J)
FIJ = FIJ + FT(J)
END
DY(J-1) = Y(J)
DY(J) = (FIJ - FJI)/EMASS(J)
END

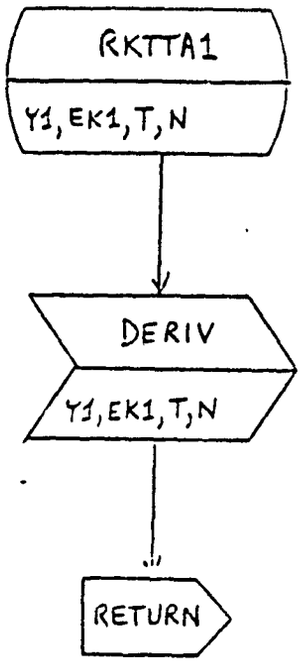
RKTTA1
Y1,EK1,T,N
DERIV
Y1,EK1,T,N
RETURN

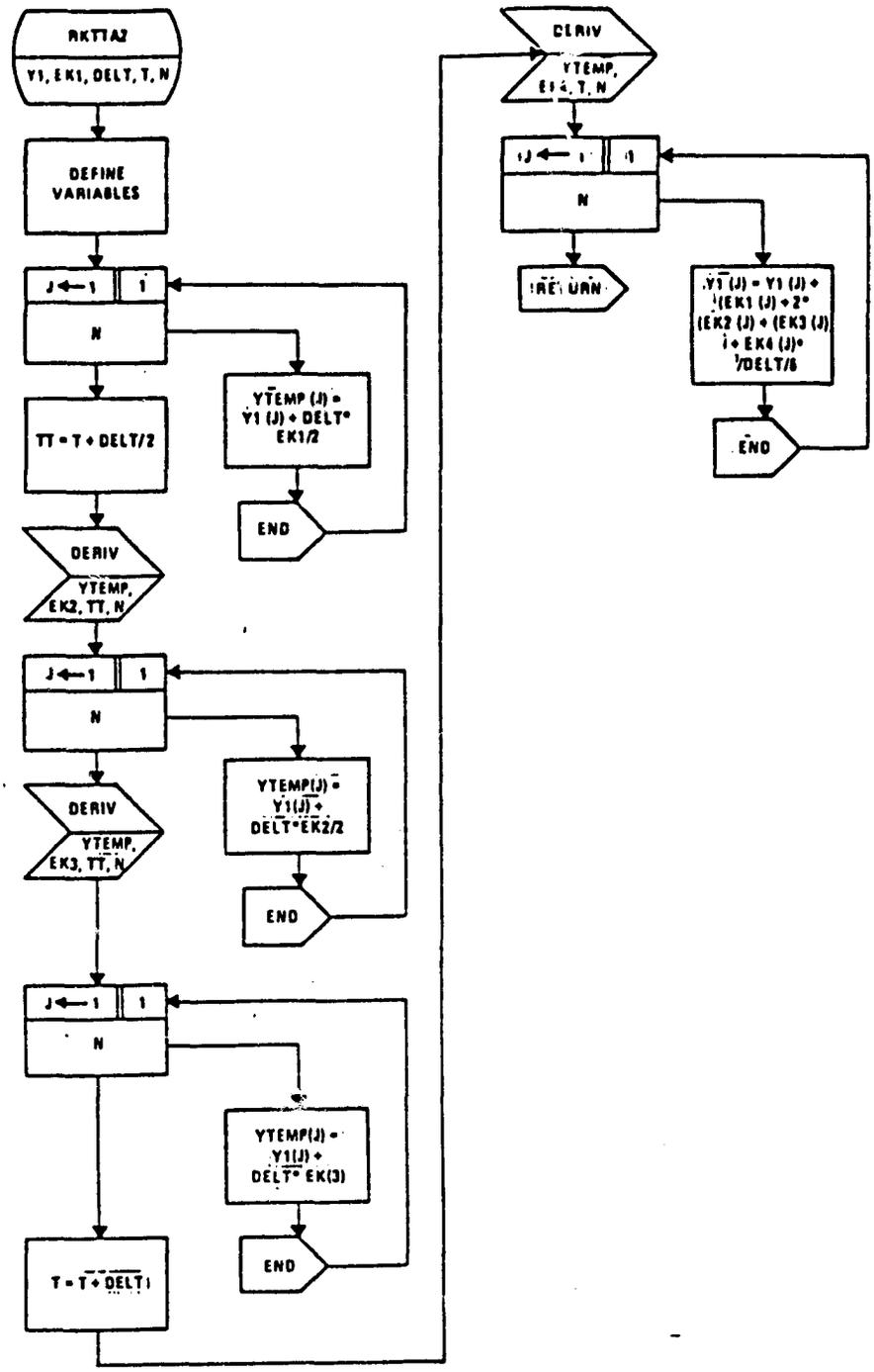
RKTTA2
Y1, EK1, DELT, T, N
DEFINE VARIABLES
J ← 1
1
N
YTEMP (J) = Y1 (J) + DELT* EK1/2
END
TT = T + DELT/2
DERIV
YTEMP, EK2, TT, N
J ← 1
1
N
YTEMP(J) = Y1(J) + DELT*EK2/2
END
DERIV
YTEMP, EK3, TT, N
J ← 1
1
N
YTEMP(J) = Y1(J) + DELT* EK(3)
END
T = T + DELT
DERIV
YTEMP, EK4, T, N
J ← 1
1
N
RETURN
Y1 (J) = Y1 (J) + (EK1 (J) + 2* (EK2 (J) + (EK3 (J) + EK4 (J)* DELT/6
END

GOLETA FORTRAN 1.3 * SEMI-AUTO RFL * (01-10-73)

ORIGINAL PAGE IS
OF POOR QUALITY

```
                PROGRAM CRASH
          C
          C     CRASH SIMULATES THE BEHAVIOR OF UP TO 10 CONNECTED MASSES IN AN
          C     IMPACT SITUATION, CALCULATING THE DISPLACEMENT, VELOCITY, AND
          C     ACCELERATION OF EACH MASS AND THE FORCE EXERTED ON THE COUPLED
          C     MASSES.
          C
          C     DEFINE VARIABLES
          C
000003          COMMON EMASS(10),F(50,10),X(50,10),FT(50),XSAV(50),FSAV(50),
               1SLOPE(50),NCOUPTB(50,3),IFLAG(50),DELX(50),DY(20),NMASST,NCOUP
000003          REAL Y1(20),K1(20)
000003          REAL TPL(203),XPL(10,200),XPL1(203),DXPL(203),DDXPL(203)
000003          DIMENSION NPMASS(10),NSYMB(10)
000003          DATA NSYMB/1,2,6,7,10,12,14,11,4,26/
          C
          C     PRINT HEADINGS
          C
000003          PRINT 500
000007          READ 400,NCASE,NPLOT
000017          IF(NPLOT.EQ.1)CALL PLOTS
          C
          C     CASE LOOP
          C
000022          DO 300 JCASE=1,NCASE
000024          READ 400, NMASS, NCOUP
 00033          READ 420,DAF
000041          READ 420,(EMASS(J), J=1,NMASS)
000054          PRINT 502
000060          PRINT 503, (I, EMASS(I), I=1,NMASS)
000074          PRINT 505
000100          READ 400, ((NCOUPTB(J,K), K=1,3), J=1,NCOUP)
000120          DO 10 J=1,NCOUP
000122              NPTS=NCOUPTB(J,3)
000124              READ 420, (X(J,K), F(J,K), K=1,NPTS)
000145              READ 420, SLOPE(J)
000153          DO 15 K=1,NPTS
000155          F(J,K)=F(J,K)*1000.*DAF
000162       15 CONTINUE
000164          SLOPE(J)=SLOPE(J)*1000
000167              PRINT 506, NCOUPTB(J,1),NCOUPTB(J,2),SLOPE(J)
000203       10     PRINT 507, (X(J,K), F(J,K), K=1,NPTS)
000225          READ 420, TF, DELT
000234          READ 400, NPRNT
000242          READ 420, V0
000250          READ 400, NPM, N3PM
000260          READ 400, (NPMASS(J),J=1,NPM)
000273          PRINT 508
000277          PRINT 509, DELT,TF,V0,NPRNT
000313          PRINT 510
000317          PRINT 515
          C
          C     INITTALIZE VARIABLES
          C
000323          T1=0.0
```

```
000324          NMASST=NMASS*2
000326          NTIMES=(TF/DELT+0.5)+1
000333          JPL=0
000334          JPRNT=0
000335          DO 20 J=1,NMASST
000336              Y1(J)=0.0
000337       20     DY(J)=0.0
000342          DO 25 J=2,NMASST,2
000344              Y1(J)=V0
000346       25 CONTINUE
000350          DO 30 J=1,NCOUP
000351              IFLAG(J)=1
000353              DELX(J)=0.0
000354              FT(J)=0.0
000355              XSAV(J)=0.0
000356       30     FSAV(J)=0.0
          C
          C     LOOP TO INTEGRATE EQUATIONS, STORE PLOT RECORDS AND SELEC
          C     RECORDS
          C
000361          JPRNT=1
000362          DO 100 JTIMES=1,NTIMES
000363              CALL RKTTA1 (Y1,K1,T1,NMASST)
000366              CALL FLAG(Y1,NCOUP)
000370          IF(NPLOT.EQ.0)GO TO 106
000371              JPL=JPL+1
000373              TPL(JPL)=T1
000375              DO 105 K=1,NPM
000376                  XPL(K,JPL)=Y1((NPMASS(K)+NPMASS(K))-1)
000404      105     CONTINUE
000406              DXPL(JPL)=Y1(N3PM+N3PM)
000411              DDXPL(JPL)=DY(N3PM+N3PM)
          C
          C         PRINT ROUTINE
          C
000414      106     IF(JPRNT.NE.JTIMES)GO TO 110
000416              PRINT 520, T1
000424              L=1
000425              DO 120 J=1,NMASST,2
000427                  PRINT 525, Y1(J),Y1(J+1),DY(J+1)
000440                  PRINT 540, NCOUPTB(L,1),NCOUPTB(L,2),FT(L)
000452                  PRINT 550
000456      120         L=L+1
000462              IF(L.GT.NCOUP)GO TO 140
000465              DO 130 K=L,NCOUP
000466                  PRINT 540, NCOUPTB(K,1),NCOUPTB(K,2),FT(K)
000477                  PRINT 550
000503      130     CONTINUE
000506      140     JPRNT=JPRNT+NPRNT
000510      110     CALL RKTTA2(Y1,K1,DELT,T1,NMASST)
000514      100 CONTINUE
000517          IF(NPLOT.EQ.0)GO TO 300
          C
          C     PLOT
          C
```

```
000520          CALL SCALE(TPL,10.0,JPL,1)
000523          CALL SCALE(DXPL,10.0,JPL,1)
000526          CALL SCALE(DDXPL,10.0,JPL,1)
000531          CALL AXIS(0.0,0.0,4HTIME,-4,10.0,0.0,TPL(JPL+1),TPL(JPL+2),0)
000545          CALL AXIS(0.0,0.0,23HVELOCITY OF MASS        ,23,10.0,90.0,
               1DXPL(JPL+1),DXPL(JPL+2),0)
000561          CALL AXIS(-0.5,0.0,27HACCELERATION OF MASS        ,27,10.0,90.0,
               1DDXPL(JPL+1),DDXPL(JPL+2),0)
000575          CALL NUMBER(-.28,5.2,0.15,N3PM,90.0,2HI2)
000601          CALL NUMBER(-.78,5.5,0.15,N3PM,90.0,2HI2)
000605          CALL LINE(TPL,DXPL,JPL,1,5,0)
000611          CALL LINE(TPL,DDXPL,JPL,1,5,5)
000615          XAXIS=-0.5
000617          DO 200 JPM=1,NPM
000620          DO 210 LPL=1,JPL
000621          XPL1(LPL)=XPL(JPM,LPL)
000625      210 CONTINUE
000627          XAXIS=XAXIS-0.5
000631      200 CALL PLOT1(TPL,JPL,XPL1,NPMASS(JPM),NSYMB(JPM),XAXIS)
000643          CALL PLOT(15.0,0.0,-3)
000645      300 CONTINUE
000650          STOP
000652      410 FORMAT(10F10.0)
000652      400 FORMAT(8I10)
000652      420 FORMAT(08F10.4)
000652      500 FORMAT(1H1,58X,*CRASH SIMULATION*)
 00652      502 FORMAT(1H-,10X,*MASS*,10X,*WEIGHT*)
000652      509 FORMAT(1H ,12X,F10.4,7X,F10.2,8X,F10.2,14X,I2)
000652      503 FORMAT(1H ,11X,I2,9X,F10.4)
000652      505 FORMAT(1H-,10X,*COUPLING*,5X,*UNLOADING SLOPE*,5X,*DEFLECTION
               1FORCE*)
000652      506 FORMAT(1H ,10X,I2,3X,I2,6X,F14.2)
000652      507 FORMAT(1H ,38X,F10.3,3X,F10.2)
000652      508 FORMAT(1H-,10X,*TIME INCREMENT*,5X,*FINAL TIME*,5X,*INITIAL VEL
               1TY*,5X,*PRINT INTERVAL*)
000652      510 FORMAT(1H-,5X,4HTIME,13X,1HX,16X,2HDX,16X,3HDDX,10X,6HMASS I,5X
               1MASS J,10X,21HFORCE BETWEEN I AND J)
000652      515 FORMAT(1H0)
000652      520 FORMAT(1H+,2X,E8.2)
000652      525 FORMAT(1H+,10X,3(6X,E12.4))
000652      540 FORMAT(1H+,    70X,I2,9X,I2,14X,E16.6)
000652      550 FORMAT(1H )
000652          END
```

GOLETA FORTRAN 1.3 * SEMI-AUTO RFL * (01-10-73)

```
                SUBROUTINE RKTTA1(Y1,EK1,T,N)
          C
          C     RKTTA1 SETS EK1 EQUAL TO INITIAL CONDITIONS FOR USE IN
          C     INTEGRATION ROUTINE
          C
000007          REAL Y1(50),EK1(50)
000007          CALL DERIV(Y1,EK1,T,N)
000010          RETURN
000011          END
```

ORIGINAL PAGE IS
OF POOR QUALITY

GOLETA FORTRAN 1.3 * SEMI-AUTO RFL * (01-10-73)

```
                SUBROUTINE RKTTA2(Y1,EK1,DELT,T,N)
          C
          C     RKTTA2 USES RUNGE-KUTTA TECHNIQUE FOR NUMERICAL INTEGRATION.
          C
000010          REAL Y1(50),Y2(50),YTEMP(50),EK1(50),EK2(50),EK3(50),EK4(50)
000010          DO 50J=1,N
000011          YTEMP(J)=Y1(J)+DELT*EK1(J)/2.
000017       50 CONTINUE
000022          TT=T+DELT/2.
000024          CALL DERIV(YTEMP,EK2,TT,N)
000027          DO 60J=1,N
000034          YTEMP(J)=Y1(J)+DELT*EK2(J)/2.
000041       60 CONTINUE
000045          CALL DERIV(YTEMP,EK3,TT,N)
000050          DO 70J=1,N
000055          YTEMP(J)=Y1(J)+DELT*EK3(J)
000061       70 CONTINUE
000064          T=T+DELT
000065          CALL DERIV(YTEMP,EK4,T,N)
000070          DO 80J=1,N
000075          Y1(J)=Y1(J)+(EK1(J)+2.*(EK2(J)+EK3(J))+EK4(J))*(DELT/6.)
000107       80 CONTINUE
000111          RETURN
000112      650 FORMAT(1H ,8E14.6)
000112          END
```

```
                SUBROUTINE DERIV(Y,K,T,N)
          C
          C     DERIV COMPUTES FORCE VALUES FOR EACH COUPLING AND ACCELERATION
          C     EACH MASS
          C
000007          COMMON EMASS(10),F(50,10),X(50,10),FT(50),XSAV(50),FSAV(50),
               1SLOPE(50),NCOUPTB(50,3),IFLAG(50),DELX(50),DY(20),NMASST,NCOUP
000007          REAL Y(20), K(20)
000007          DO 5 I=1,N
000010               K(I)=0.0
000012        5 CONTINUE
000013          DO 7 I=1,N
000015            K(I)=DY(I)
000017        7 CONTINUE
000021          DO 10 J=1,NCOUP
000022               IF(NCOUPTB(J,1).EQ.0)GO TO 15
000024               DELX(J)=Y((NCOUPTB(J,2)+NCOUPTB(J,2))-1)-Y((NCOUPTB(J,1)+NC
               1     TB(J,1))-1)
000034               GO TO 20
000035       15      DELX(J)=Y((NCOUPTB(J,2)+NCOUPTB(J,2))-1)
000043       20      IF(IFLAG(J).EQ.-1)GO TO 25
000046               FT(J)=ENTP(J)
000051               GO TO 10
000054       25      FT(J)=AMAX1(0.,FSAV(J)-SLOPE(J)*(XSAV(J)-DELX(J)))
000066       10 CONTINUE
000071          DO 30 J=2,N,2
 00072               FIJ=0.0
000073               FJI=0.0
000074               JT=J/2
000075               DO 40 L=1,NCOUP
000077                    IF(NCOUPTB(L,1).NE.JT.AND.NCOUPTB(L,2).NE.JT)GO TO 40
000106                    IF(NCOUPTB(L,2).GT.JT)GO TO 50
000112                    FJI=FJI+FT(L)
000114                    GO TO 40
000114       50           FIJ=FIJ+FT(L)
000117       40      CONTINUE
000122               DY(J-1)=Y(J)
000125               DY(J)=(FIJ-FJI)/EMASS(JT)
000131       30 CONTINUE
000133      525 FORMAT(1H ,10X,4(6X,E12.4))
000133          RETURN
000133          END
```

ORIGINAL PAGE IS
OF POOR QUALITY

GOLETA FORTRAN 1.3 * SEMI-AUTO OFL * (01-10-73)

```
                SUBROUTINE FLAG(Y,N)
          C
          C     FLAG CHECKS EACH COUPLING FOR UNLOADING
          C
000005          REAL Y(20)
000005          COMMON EMASS(10),F(50,10),X(50,10),FT(50),XSAV(50),FSAV(50),
               1SLOPE(50),NCOUPTB(50,3),IFLAG(50),DELX(50),DY(20),NMASST,NCOUP
000005          DO 10 J=1,N
000006             IF(NCOUPTB(J,1).EQ.0)GO TO 15
000010             DELX=Y(NCOUPTB(J,2)+NCOUPTB(J,2))-Y(NCOUPTB(J,1)+NCOUPTB(J
               1   ))
000015             GO TO 18
000016       15    DDELX=Y(NCOUPTB(J,2)+NCOUPTB(J,2))
000022       18    IF(DDELX.GE.0 .OR. IFLAG(J).EQ.-1)GO TO 20
000034             IFLAG(J)=-1
000035             FSAV(J)=FT(J)
000040             XSAV(J)=DELX(J)
000042       20    IF(DELX(J).LE.XSAV(J))GO TO 10
000046          IFLAG(J)=1
000047       10 CONTINUE
000052          RETURN
000052          END
```

ORIGINAL PAGE IS
OF POOR QUALITY

GOLETA FORTRAN 1.3 * SEMI-AUTO RFL * (01-10-73)

```
                REAL FUNCTION ENTP(N)
          C
          C     ENTP INTERPOLATES FORCE FOR SPECIFIED COUPLING
          C
000003          COMMON EMASS(10),F(50,10),X(50,10),FT(50),XSAV(50),FSAV(50),
               1SLOPE(50),NCOUPTB(50,3),IFLAG(50),DELX(50),DY(20),NMASST,NCOUP
000003          IF(DELX(N).GE.X(N,1))GO TO 10
000006          J=2
000007          GO TO 30
000010       10 NX=NCOUPTB(N,3)
000012          DO 20 J=2,NX
000014             IF(DELX(N).LT.X(N,J))GO TO 30
000021       20 CONTINUE
000024       30 ENTP=F(N,J-1)+(DELX(N)-X(N,J-1))*((F(N,J)-F(N,J-1))/(X(N,J)-
               1X(N,J-1)))
000043          RETURN
000044          END
```

CRASH SIMULATION

MASS	WEIGHT
1	173.4000
2	393.9000
3	813.3000
4	127.3000
5	273.0000

COUPLING		UNLOADING SLOPE	DEFLECTION	FORCE
0	1	82000000.00		
			0.000	0.00
			.100	85000.00
			.170	119000.00
			.175	467500.00
			.190	297500.00
			.650	297500.00
			.670	690000.00
0	2	1975000.00		
			0.000	0.00
			.430	0.00
			.560	21250.00
			.600	85000.00
0	3	5300000.00		
			0.000	0.00
			.200	0.00
			.300	17000.00
			.325	127500.00
			.350	25500.00
			.500	25500.00
			.900	102000.00
			1.000	102000.00
1	2	400000.00		
			-.100	0.00
			0.000	0.00
			.050	17000.00
			.200	17000.00
2	1	400000.00		
			-.100	0.00
			0.000	0.00
			.050	17000.00
			.200	17000.00
1	3	24125000.00		
			0.000	0.00
			.016	392500.00
			.020	212500.00
			.250	212500.00
			.256	510000.00
2	3	4000000.00		
			0.000	0.00
			.050	9500.00
			.270	45000.00
2	4	[illegible]		
			[illegible]	[illegible]

		.320	170000.00
		.340	34000.00
		.120	0.00
		.200	0.00
3	5	1500000.00	
		0.300	0.00
		.350	21250.00
		.150	21250.00
		.200	85100.00

TIME INCREMENT	FINAL TIME	INITIAL VELOCITY	PRINT INTERVAL
.0005	.13	13.42	10

TIME	Y	DY	DDY	MASS I	MASS J	FORCE BETWEEN I AND J
0.	0.	1.3417E+01	0.	0	1	0.
	0.	1.3417E+01	0.	0	2	0.
	0.	1.3417E+01	0.	0	3	0.
	0.	1.3417E+01	0.	1	2	0.
	0.	1.3417E+01	0.	2	1	0.
				1	3	0.
				2	3	0.
				2	4	0.
				1	4	0.
				3	5	0.
5.00E-13	6.4981E-02	1.2417E+01	-1.8436E+02	0	1	5.523355E+04
	6.5965E-02	1.3416E+01	-9.4521E-01	0	2	0.
	6.5941E-02	1.3335E+01	-2.7923E+01	0	3	0.
	6.5965E-02	1.3416E+01	-1.6773E+00	1	2	3.345733E+02
	6.5965E-02	1.3417E+01	-4.1304E-02	2	1	0.
				1	3	2.293017E+04
				2	3	0.
				2	4	1.643946E+03
				3	4	2.129544E+02
				3	5	1.038215E+01
1.00E-12	1.2754E-01	1.2418E+01	5.3950E+01	0	1	9.837613E+04
	1.3275E-01	1.3433E+01	-4.7322E+00	0	2	0.
	1.3219E-01	1.3037E+01	-1.2929E+02	0	3	3.
	1.3294E-01	1.3333E+01	-5.0839E+01	1	2	1.864039E+03
	1.3359E-01	1.3415E+01	-1.3551E+00	2	1	0.
				1	3	1.118632E+05
				2	3	0.
				2	4	0.
				1	4	6.399953E+03
				3	5	3.658793E+02
1.50E-12	1.9953E-01	1.1730E+01	-9.3994E+02	0	1	3.029839E+05
	1.3997E-01	1.3371E+01	-9.3134E+01	0	2	0.
	1.3962E-01	1.2330E+01	-1.4553E+02	0	3	0.
	1.9954E-01	1.2755E+01	-1.3541E+02	1	2	3.550399E+03
	2.3009E-01	1.3336E+01	-7.3656E+00	2	1	0.
				1	3	1.451893E+05
				2	3	0.
				2	4	0.
				3	4	2.499293E+04
				3	5	1.907723E+03
2.00E-12	[illegible]	[illegible]	[illegible]	0	1	[illegible]
	[illegible]	[illegible]	[illegible]	1	[illegible]	[illegible]

PAGE IS

C1.4 HANDLING PROGRAMS (HYSIM and HYSSG)

1. Program Description

HYSIM and HYSSG are programs designed to provide a coarse indication of how changes in mass distribution, vehicle dimensions, and tire characteristics affect handling properties. HYSIM simulates the transient response of an automobile to a step in steer angle, and HYSSG computes the steady-state gain of yaw rate to steer angle as a function of forward speed. Both programs are based on a mathematical model which represents the automobile as a single mass with 3 degrees of freedom: lateral displacement, yaw and roll.

In HYSIM, the dynamics of tire force buildup are neglected, which means the front and rear tire force equations become algebraic expressions for the tire forces Y_f and Y_r. Thus, if

$$Y = \begin{matrix} \dot{y}_1 \\ \dot{\psi} \\ \dot{\phi} \\ \phi \end{matrix} \quad \text{and} \quad Z = \begin{matrix} Y_f \\ Y_r \end{matrix}$$

the above differential equations can be written in the form

$$\dot{AY} = BY + CZ$$

$$Z = DY + E$$

or

$$\dot{Y} = A^{-1}((B + CD)\,Y + CE\delta)$$

This is the form in which HYSIM solves the differential equations of motion for the vehicle.

For HYSSG, $\ddot{y}_1$, $\ddot{\psi}$, $\dot{\phi}$, $\dot{Y}_f$, and $\dot{Y}_r$ are all set equal to zero and the steady gain of the vector Y, (and hence of its component $\dot{\psi}$, the yaw rate), to δ, is computed as follows:

$$BY = -CZ = -C\,(DY + ES), \text{ or } \frac{1}{\delta}\,Y = -\,(B + CD)^{-1}\,CE$$

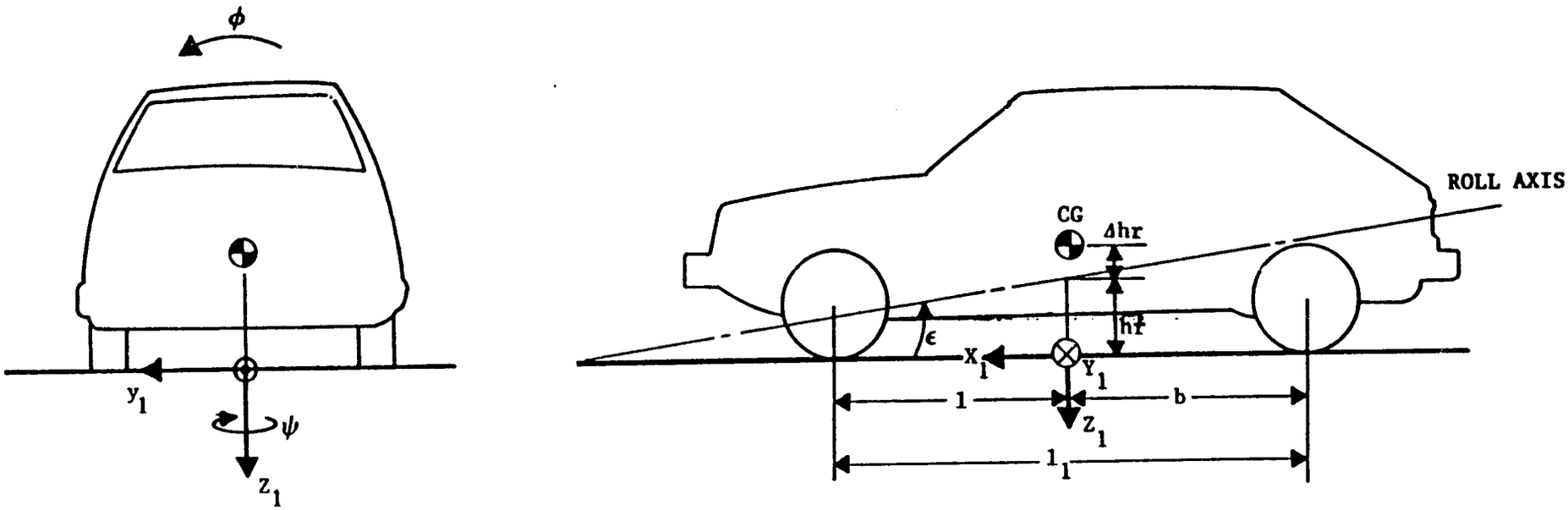

Figure A4-1 Vehicle Geometry and Coordinate Systems

ORIGINAL PAGE IS
OF POOR QUALITY

Summary of Equations for Linear, Constant-Speed Model

Lateral:

$$m_r \ddot{y}_1 + m_r \Delta h_r \ddot{\phi} = -\left(m_r + \frac{i_{ry}}{R^2}\right)\dot{x}_1 \dot{\psi} + Y_f + Y_r$$

Yaw:

$$I_{r_z} \ddot{\psi} - C_{r_{xz}} \ddot{\phi} = \frac{i_{ry}}{R^2} \dot{x}_1 \dot{y}_1 + F_A (\Delta h_r + h_r - h_a)\phi + \ell Y_f - b Y_r$$

Roll:

$$m_r \Delta h_r \ddot{y}_1 - C_{r_{xz}} \ddot{\psi} + (I_{r_x} + m_r \Delta h_r^2)\ddot{\phi} =$$
$$- m_r \Delta h_r \dot{x}_1 \dot{\psi} - (C_{\phi f} + C_{\phi r})\dot{\phi} + (m_r g \Delta h_r - K_{\phi f} - K_{\phi r})\phi$$
$$-(h_r - \ell\epsilon) Y_f - (h_r + b\epsilon) Y_r$$

Front Tires

$$\frac{\sigma_f}{\dot{x}_1} \dot{Y}_f = -Y_f - \frac{C_{\alpha f} Z_f}{\dot{x}_1} \dot{y}_1 - \frac{C_{\alpha f} Z_f}{\dot{x}_1} \ell \dot{\psi} + C_{\alpha f} Z_f \delta$$

Rear Tires:

$$\frac{\sigma_f}{\dot{x}_1} \dot{Y}_r = -Y_r - \frac{C_{\alpha r} Z_r}{\dot{x}_1} \dot{y}_1 - \frac{C_{\alpha r} Z_r}{\dot{x}_1} b \dot{\psi}$$

Miscellaneous:

$$F_A = 0.6125\, C_D A \dot{x}_1^2$$

$$Z_f = \theta_f m_r g - \frac{F_A h_A}{} \qquad Z_r = m_r g - Z_f$$

PARAMETERS		UNITS	DESCRIPTION
EQUATION	PROGRAM		
	NCASE	—	NUMBER OF CASES
	NSPD	—	NUMBER OF SPEEDS
	NSTEPS	—	NUMBER OF INTEGRATION STEPS
	NPSTEP	—	PRINT FREQUENCY
	DELT	SEC	TIME INCREMENT
	SPEED(10)	KM	SPEEDS
	TM	SEC	FINAL TIME
	Y(4)	—	LATERAL VELOCITY, YAW RATE, ROLL RATE, ROLL ANGLE
m	EM	KG	MASS OF VEHICLE
I_{rx}	ENRTX	KG-m²	MOMENTS OF INERTIA WITH RESPECT
I_{ry}	ENRTY	KG-m²	TO X, Y, AND Z AXES
I_{rz}	ENRTZ	KG-m²	
C_{rxz}	CXZ	KG-m²	PRODUCT OF INERTIA WITH RESPECT TO X+Z AXES
ℓ_1	EL1	m	WHEEL BASE LENGTH
ℓ	EL	m	LENGTH FRONT AXLE TO CENTER OF GRAVITY
h_r	H	m	ROLL CENTER HEIGHT
Δh_r	CH	m	(CENTER OF GRAVITY − ROLL CENTER) HEIGHT
Θ	THETA	—	FRACTION WT. ON FRONT WHEEL W/ STATIC CONDITIONS
ϵ	EPSLN	RAD	INCLINATION OF ROLL AXIS
R	R	m	WHEEL RADIUS
h_a	HA	m	AERO-DYNAMIC CENTER OF EFFORT
C_oA	CDA	—	DRAG COEFFICIENT × FRONTAL AREA
δ	DELTA	RAD	STEER ANGLE
$C_{\phi f}$	CPF	N/RAD	ROLL DAMPING - FRONT
$C_{\phi r}$	CPR	N/RAD	ROLL DAMPING - REAR
$K_{\phi f}$	EKPF	N/RAD	ROLL STIFFNESS - FRONT
$K_{\phi r}$	EKPR	N/RAD	ROLL STIFFNESS - REAR
$C_{\alpha f}$	CAF	N/RAD	LATERAL FORCE - FRONT
$C_{\alpha r}$	CAR	N/RAD	LATERAL FORCE - REAR
σ_f	SIGMAF	m	RELAXATION LENGTH - FRONT
σ_r	SIGMAR	m	RELAXATION LENGTH - REAR

VARIABLES		UNITS	DESCRIPTION
EQUATION	PROGRAM		
	ACCLAT	m/sec²	LATERAL ACCELERATION
	AINV(4,4)	—	INVERSE OF AM
	AM(4,4)	—	COEFFICIENT MATRIX
b	B	m	EL1 - EL (see list of input parameters)
	BED(4,4)	—	BM-MATRIX * ED-MATRIX
	BM(4,4)	—	COEFFICIENT MATRIX
	BMT(3,3)	—	MATRICES USED IN MATRIX
	BMTT(3,3)	—	INVERSION ROUTINE
	C(4,4)	—	AINV-MATRIX * BED-MATRIX
$C_{\alpha f} Z_f$	CAFZF	N/RAD	LATERAL FORCE * LATERAL LOAD ON FRONT TIRE
$C_{\alpha f} Z_r$	CARZR	N/RAD	LATERAL FORCE * LATERAL LOAD ON REAR TIRE
	DD(2,4)	—	COEFFICIENT MATRIX
	ED(4,4)	—	EE-MATRIX * DD-MATRIX
	EE(4,2)	—	COEFFICIENT MATRIX
	EF(4)	—	EE-MATRIX * F-MATRIX
$m_r \Delta h_r$	EMCH	—	MASS * (CENTER GRAVITY - ROLL CENTER) HEIGHT
	EMT(3,3)	—	MATRIX USED IN MATRIX INVERSION ROUTINE
	ENRTYR	KG-m²	ROTATIONAL INERTIA OF WHEELS
	F(2)	—	COEFFICIENT MATRIX
F_A	FA	—	FACOEF * SPEED
$0.612 C_D A$	FACOEF	—	0.612 * DRAG COEFFICIENT * FRONTAL AREA
g	G	N/RAD	GRAVITY
	GG(4)	—	AINV-MATRIX * EF-MATRIX
	K1(10)	—	VARIABLES OF INTEGRATION
	SUBA(3,3)	—	MATRICES USED IN MATRIX
	SUBANV(3,3)	—	INVERSION ROUTINE
	TRAN(3,3)	—	
	TRI(3,3)	—	
$\dot{x}_1$	XDOT	m/sec	SPEED FOR SPECIFICIED SPEED LOOP
	Y1(10)	—	VARIABLES OF INTEGRATION
Z_f	ZF	KG	LATERAL LOAD ON FRONT TIRES
Z_r	ZR	KG	LATERAL LOAD ON REAR TIRES

ORIGINAL PAGE IS
OF POOR QUALITY

GRC
GENERAL RESEARCH CORPORATION

FORTRAN CODING FORM

PROGRAM	HYSIM	NAME	
ROUTINE	Input Format	DATE	PAGE OF

FORTRAN STATEMENT — 0 - ZERO, O - ALPHA O; 1 = ONE, I = ALPHA I; 2 = TWO, Z = ALPHA Z

TYPE	STATEMENT NO.	CONT	FORTRAN STATEMENT	SERIAL NUMBER
		N	CASE NSPD	
	NS		TEPS NPSTEP	
			DELT	
	SPEE		D(1) ... SPEED(NSPD)	
			TM Y(1) ... Y(4)	
			MASS PROPERTIES	
			EM ENRTX ENRTY ENRTZ CXZ	
			GEOMETRICAL PROPERTIES	
			EL1 EL H CH THETA EPSLN R	
			HA CDA DELTA	
			TIRE PROPERTIES	
			CPF CPR EKPF EKPR CAF CAR SIGMAF	
	SI		GMAR	

C-141

FORM NO. GRC 103 Rev. 1

HYSIM (MAIN PROGRAM)

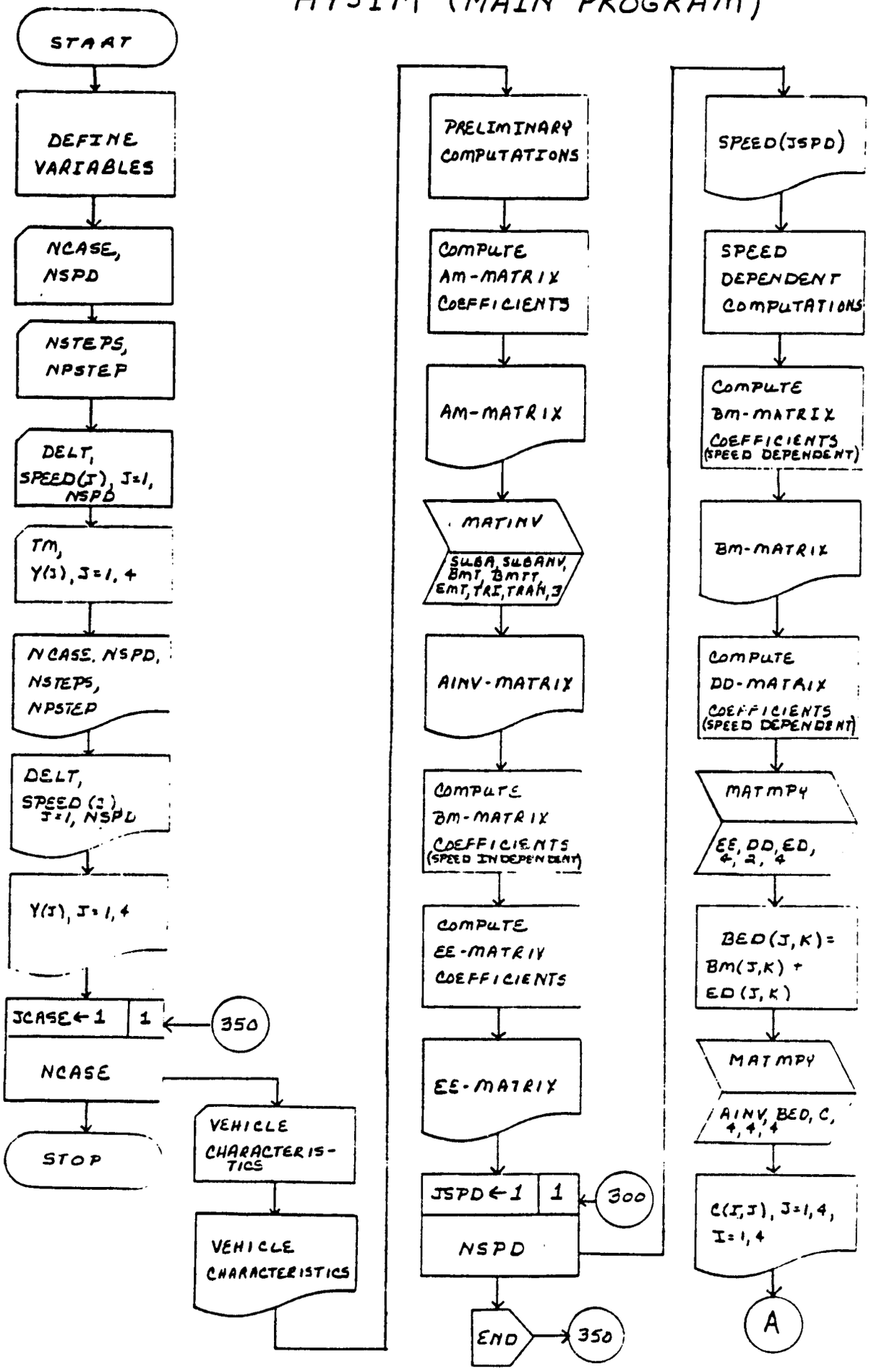

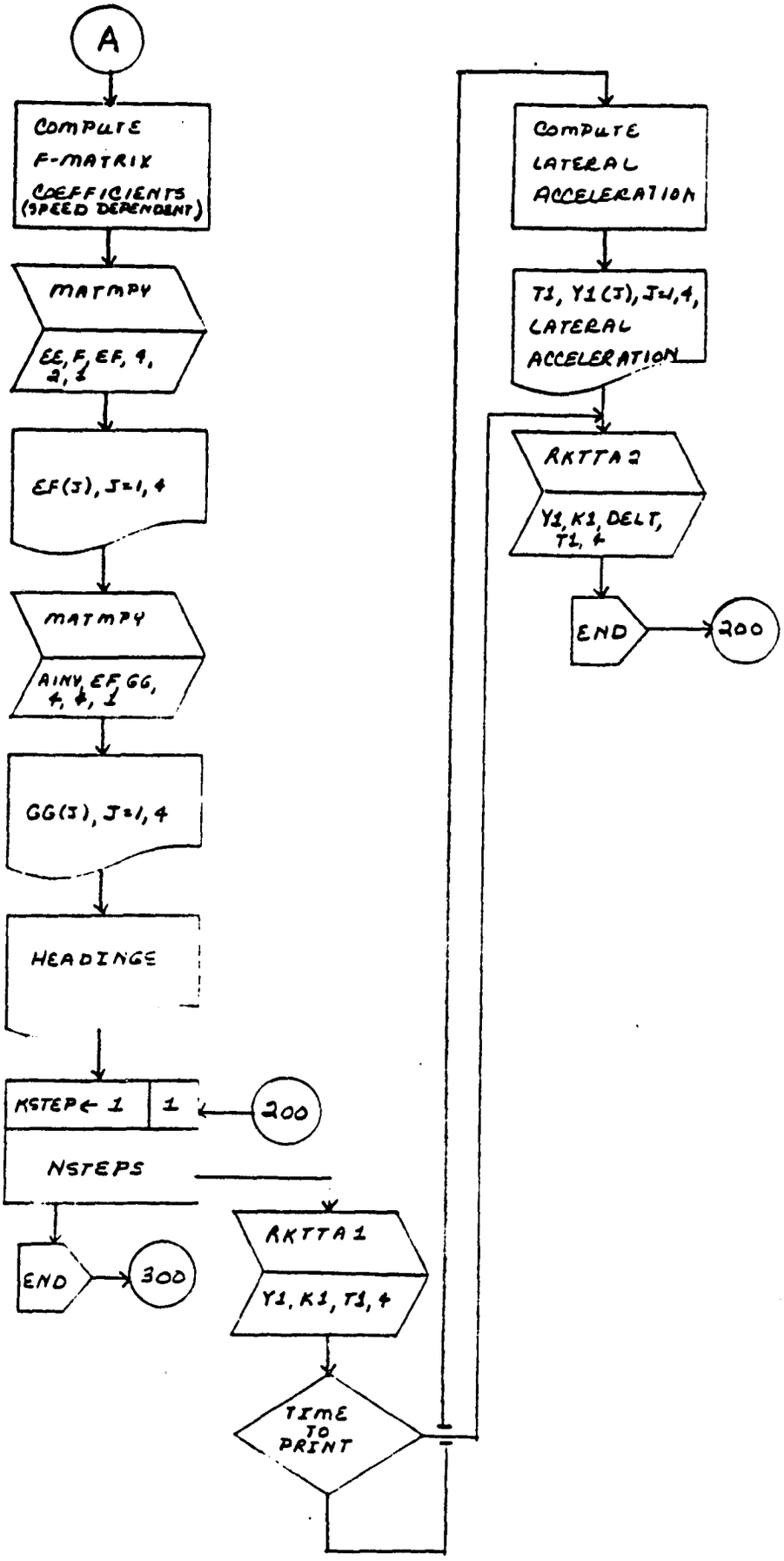

ORIGINAL PAGE IS
OF POOR QUALITY

SUBROUTINE DERIV

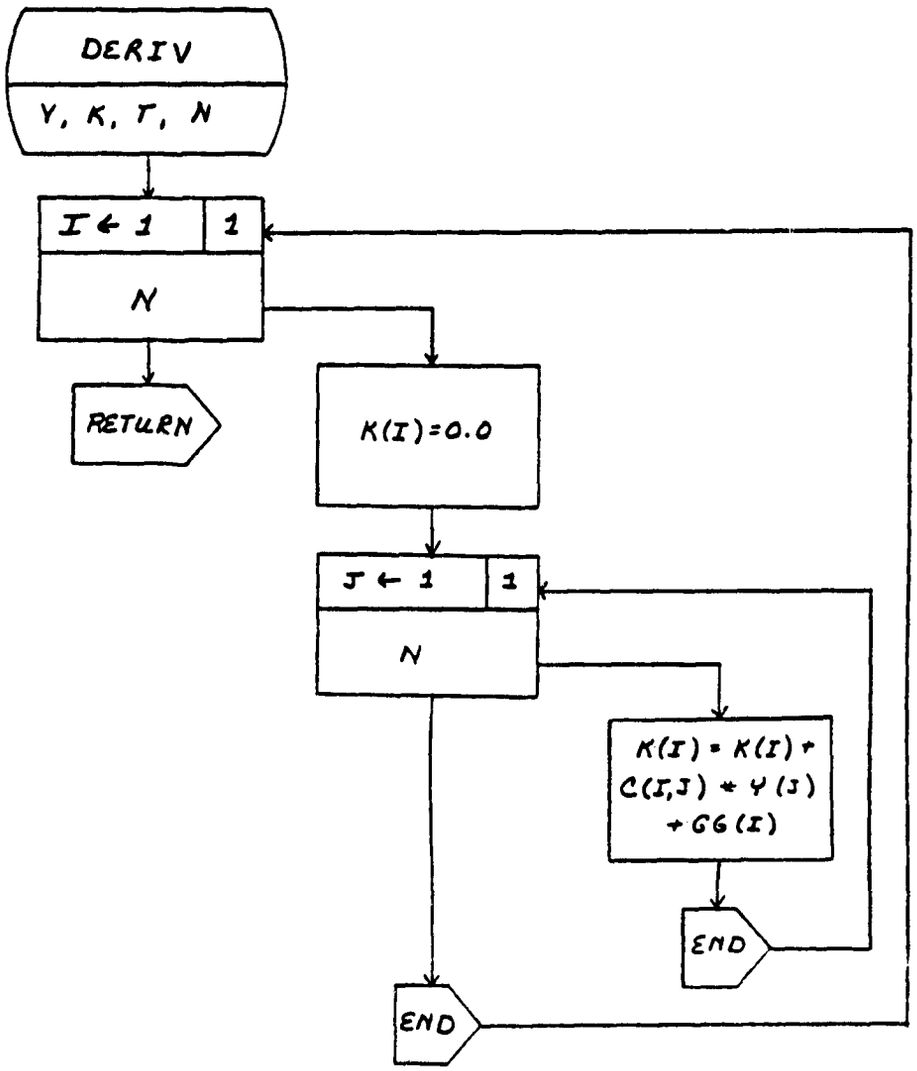

ORIGINAL PAGE IS
OF POOR QUALITY

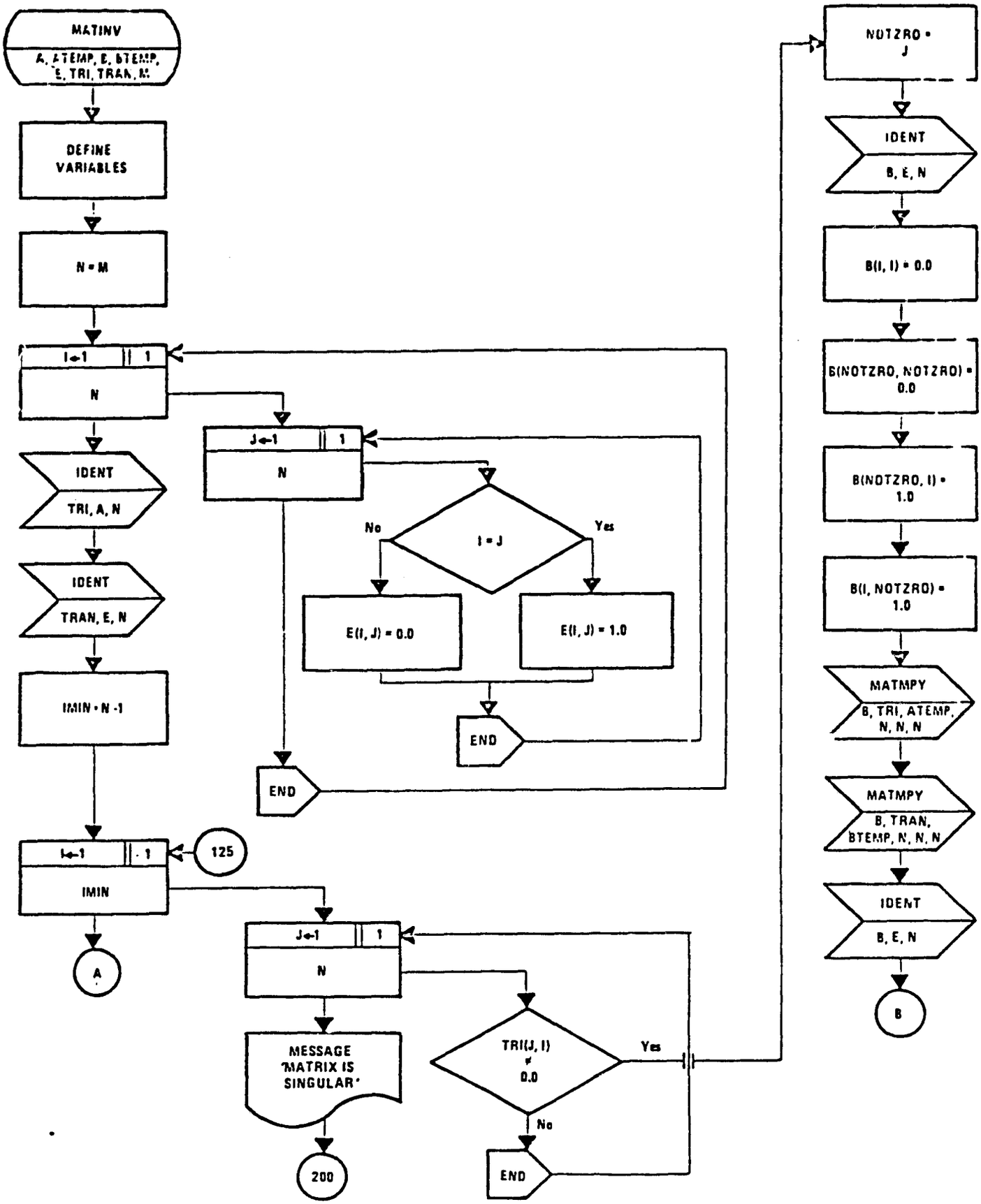
MATINV
A, ATEMP, E, BTEMP, E, TRI, TRAN, N
DEFINE VARIABLES
N = M
I←1 || 1
N
IDENT
TRI, A, N
IDENT
TRAN, E, N
IMIN = N -1
I←1 || -1
IMIN
125
A
J←1 || 1
N
I = J
No
Yes
E(I, J) = 0.0
E(I, J) = 1.0
END
END
J←1 || 1
N
MESSAGE 'MATRIX IS SINGULAR'
200
TRI(J, I) ≠ 0.0
Yes
No
END
NOTZRO = J
IDENT
B, E, N
B(I, I) = 0.0
B(NOTZRO, NOTZRO) = 0.0
B(NOTZRO, I) = 1.0
B(I, NOTZRO) = 1.0
MATMPY
B, TRI, ATEMP, N, N, N
MATMPY
B, TRAN, BTEMP, N, N, N
IDENT
B, E, N
B

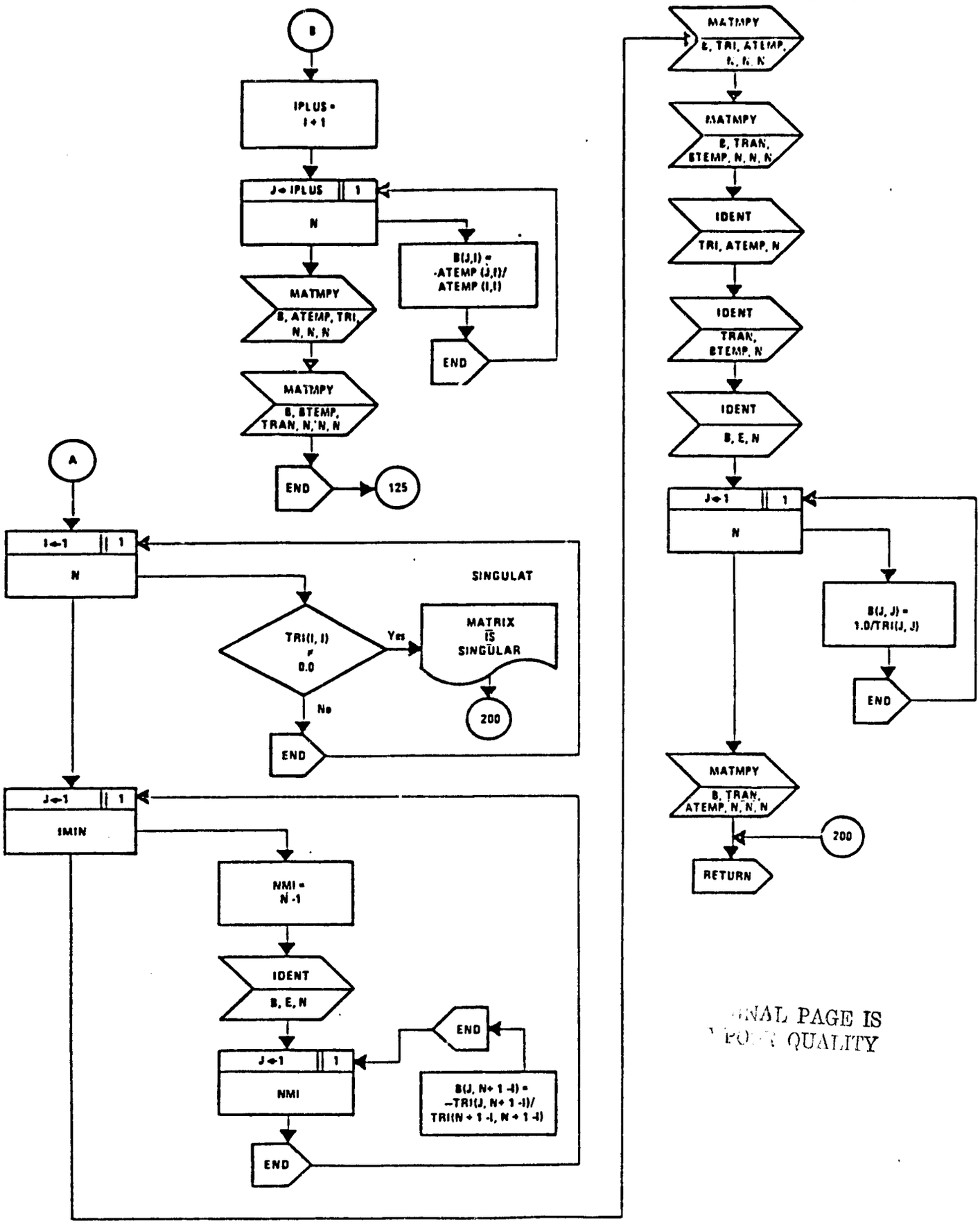

ORIGINAL PAGE IS
OF POOR QUALITY

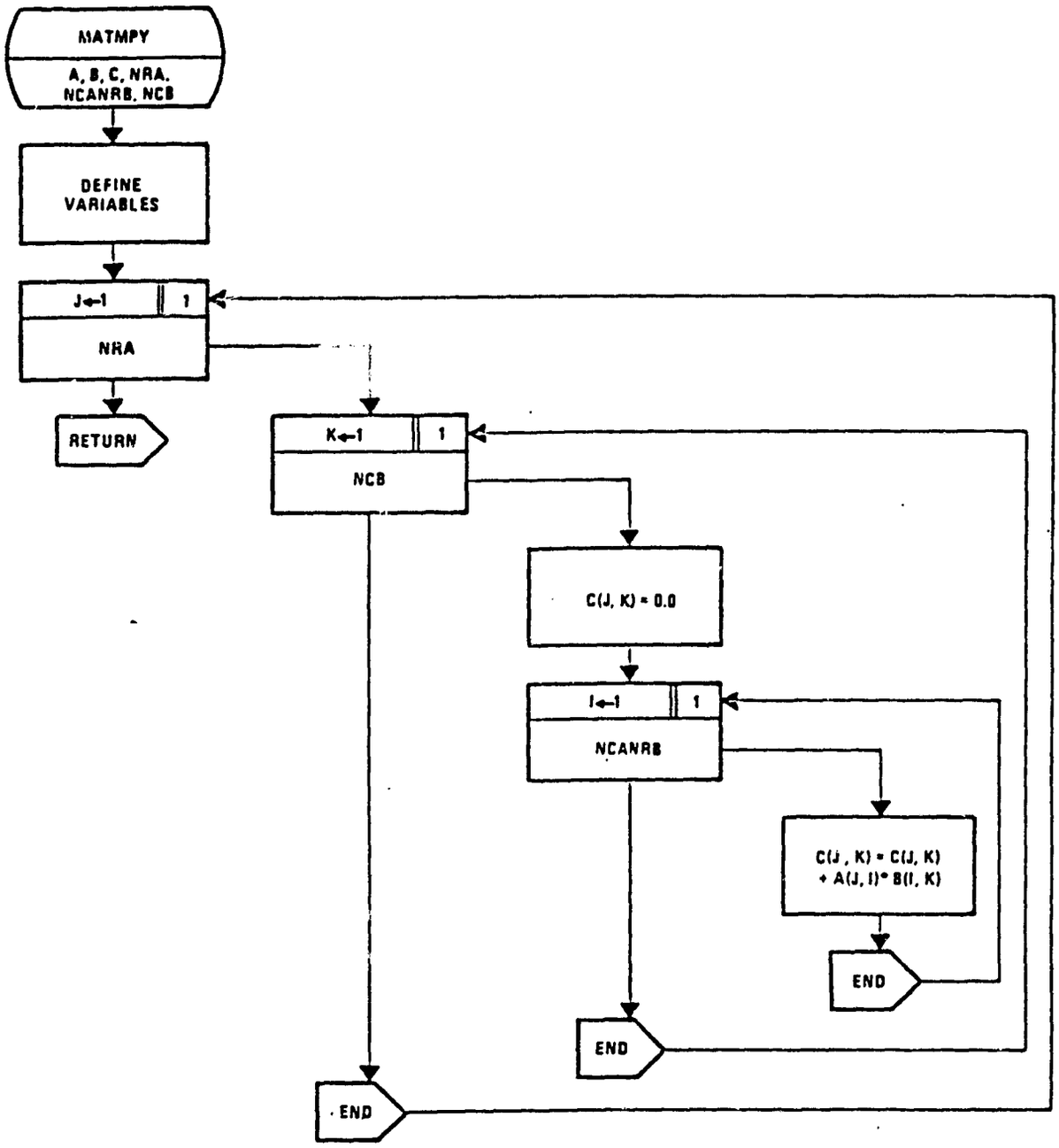
MATMPY
A, B, C, NRA, NCANRB, NCB
DEFINE VARIABLES
J←1
1
NRA
RETURN
K←1
1
NCB
C(J, K) = 0.0
I←1
1
NCANRB
C(J, K) = C(J, K) + A(J, I)* B(I, K)
END
END
END

SUBROUTINE IDENT

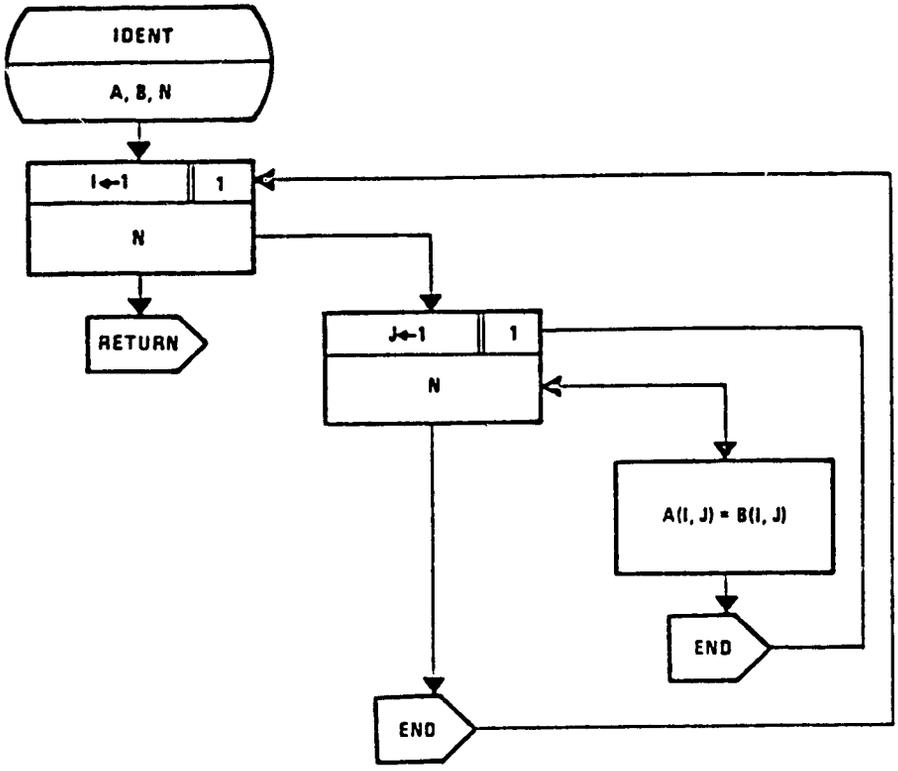

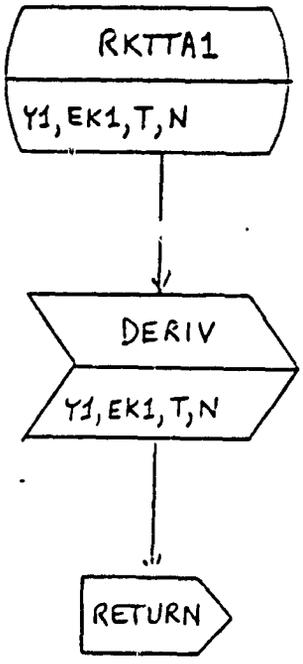
RKTTA1
Y1, EK1, T, N
DERIV
Y1, EK1, T, N
RETURN

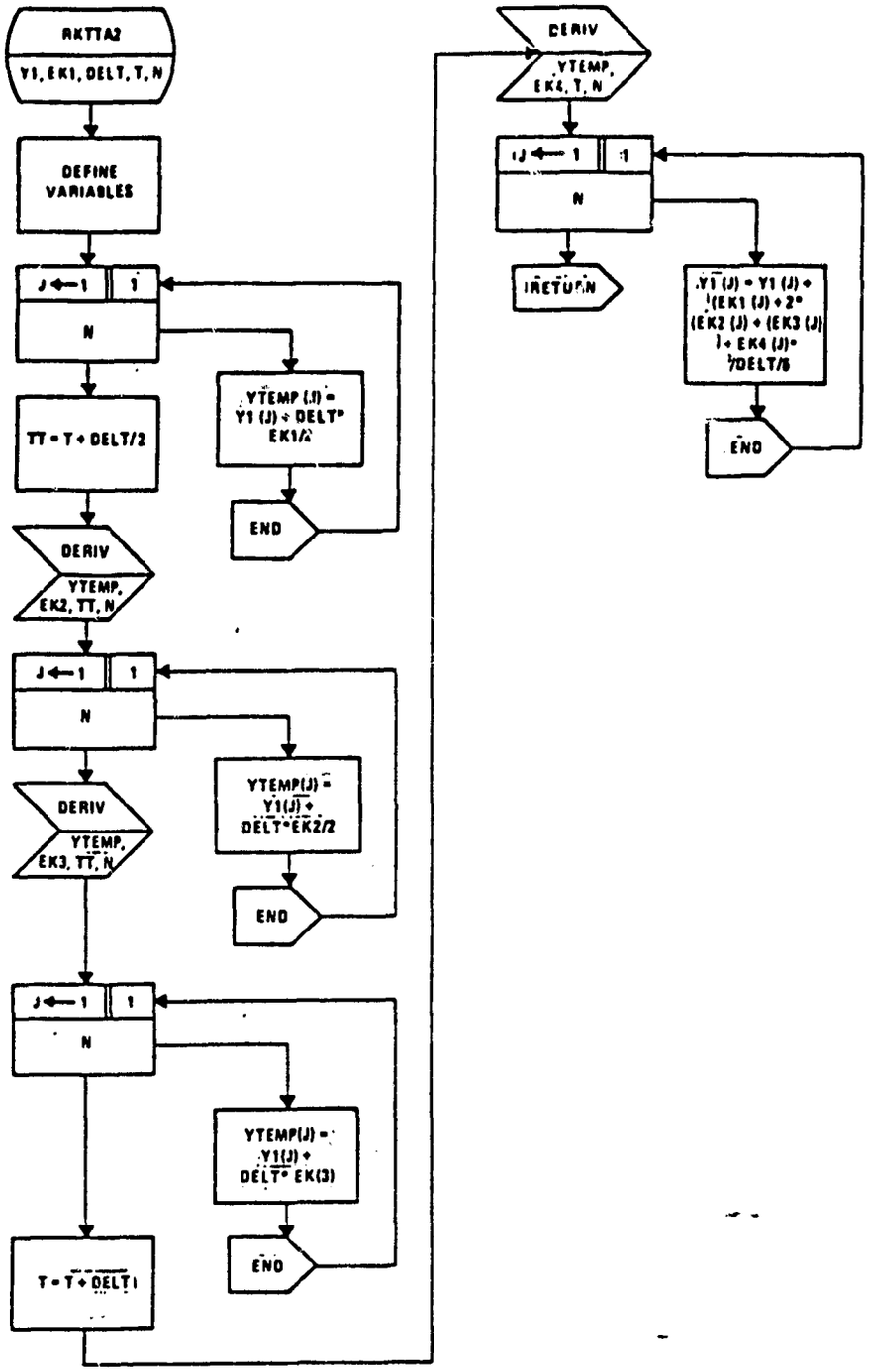
RKTTA2
Y1, EK1, DELT, T, N
DEFINE VARIABLES
J ← 1
1
N
TT = T + DELT/2
YTEMP (J) = Y1 (J) + DELT* EK1/2
END
DERIV
YTEMP, EK2, TT, N
J ← 1
1
N
YTEMP(J) = Y1(J) + DELT*EK2/2
END
DERIV
YTEMP, EK3, TT, N
J ← 1
1
N
YTEMP(J) = Y1(J) + DELT* EK(3)
END
T = T + DELT
DERIV
YTEMP, EK4, T, N
J ← 1
1
N
IRETURN
Y1 (J) = Y1 (J) + (EK1 (J) + 2* (EK2 (J) + (EK3 (J) + EK4 (J)* DELT/6
END

GOLETA FORTRAN 1.3 * SEMI-AUTO REL * (01-10-73)

```
                PROGRAM HYSIM
          C
          C     DEFINE VARIABLES
          C
000003          REAL AM(4,4),BM(4,4),AINV(4,4),SUBA(3,3),SUBANV(3,3)
000003          REAL EE(4,2),CD(2,4),F(2),ED(4,4),EF(4),BED(4,4)
000003          REAL BMT(3,3),BMTT(3,3),EMT(3,3),TRI(3,3),TRAN(3,3)
000003          REAL SPEED(10)
000003          REAL Y1(10),K1(10),Y(10)
000003          COMMON C(4,4),GG(4)
          C
          C     READ INPUT
          C
000003          READ 410, NCASE,NSPD
000013          READ 410,NSTEPS,NPSTEP
000023          READ 400,DELT
000031          READ 400,(SPEED(J), J=1,NSPD)
000044          READ 400,TM,(Y(J),J=1,4)
000060          PRINT 500
000064          PRINT 498,NCASE,NSPD,NSTEPS,NPSTEP
000100          PRINT 499,DELT,(SPEED(J),J=1,NSPD)
000115          PRINT 505
000121          PRINT 520,(Y(J),J=1,4)
000133          PRINT 507
          C
          C     CASE LOOP
          C
000137          DO 350 JCASE=1,NCASE
          C
          C     INPUT MASS PROPERTIES
          C
          C
          C     INPUT GEOMETRICAL PROPERTIES
000141          READ 400,EM,ENRTX,ENRTY,ENRTZ,CXZ
000156          READ 400,EL1,EL,H,CH,THETA,EPSLN,R,HA,CDA,DELTA
          C
          C     TIRE PROPERTIES
          C
000206          READ 400,CPF,CPR,EKPF,EKPR,CAF,CAR,SIGMAF,SIGMAR
          C
          C     PRINT VEHICLE CHARACTERISTICS
000232          PRINT 510
000236          PRINT 520,EM,ENRTX,ENRTY,ENRTZ,CXZ
000254          PRINT 530
000260          PRINT 520,EL1,EL,H,CH,THETA,EPSLN
000300          PRINT 540
000304          PRINT 520,R,HA,CDA,DELTA
000320          PRINT 550
000324          PRINT 520,CPF,CPR,EKPF,EKPR
000340          PRINT 560
000344          PRINT 520,CAF,CAR,SIGMAF,SIGMAR
          C
          C     PRILIMINARY COMPUTATIONS
          C
000360          B=EL1-EL
```

```
000362          FACOEF=0.612*CDA
 00364          G=9.807
000366          EMCH=EM*CH
          C
          C     A-MATRIX COEFFICIENTS(SPEED INDEPENDENT)
          C
000370          DO 100 J=1,4
000371          DO 100 K=1,4
000372          AM(J,K)=0.0
000375      100 CONTINUE
000400          AM(1,1)=EM
000402          AM(1,3)=EMCH
000403          AM(2,2)=ENRTZ
000405          AM(2,3)=-CXZ
000406          AM(3,1)=EMCH
000407          AM(3,2)=-CXZ
000410          AM(3,3)=ENRTX+EM*CH**2
000413          AM(4,4)=1.0
000415          PRINT 570
000420          PRINT 580,((AM(I,J),J=1,4),I=1,4)
          C
          C     INVERSE OF A-MATRIX
          C
000435          DO 110 J=1,3
000440          DO 110 K=1,3
000441          SUBA(J,K)=AM(J,K)
 00446      110 CONTINUE
000451          CALL MATINV(SUBA,SUBANV,BMT,BMTT,EMT,TRI,TRAN,3)
000461          DO 120 J=1,4
000463          DO 120 K=1,4
000464          IF(J.LE.3.AND.K.LE.3)GO TO 130
000474          AINV(J,K)=0.0
000476          GO TO 120
000476      130 AINV(J,K)=SUBANV(J,K)
000503      120 CONTINUE
000507          AINV(4,4)=1.0
000511          PRINT 590
000514          PRINT 580,((AINV(I,J),J=1,4),I=1,4)
          C
          C     B-MATRIX COEFFICIENTS(SPEED INDEPENDENT)
          C
000532          DO 140 J=1,4
000534          DO 140 K=1,4
000535          BM(J,K)=0.0
000540      140 CONTINUE
000543          BM(3,3)=-CPF-CPR
000546          BM(3,4)=EMCH*G-EKPF-EKPR
000552          BM(4,3)=1.0
          C
          C     E-MATRIX COEFFICIENTS(SPEED INDEPENDENT)
          C
000553          DO 150 J=1,2
 00555          DO 150 K=1,4
000556          FE(J,K)=0.0
000561      150 CONTINUE
```

```
000564          EE(1,1)=1.0
 00566          EE(1,2)=1.0
000567          EE(2,1)=EL
000570          EE(2,2)=-B
000572          EE(3,1)=-H+EL*EPSLN
000575          EE(3,2)=-H-B*EPSLN
000577          PRINT 490,((EE(I,J),J=1,2),I=1,4)
          C
          C     SPEED LOOP
          C
000614          DO 300 JSPD=1,NSPD
000616          JPL=0
000617          T1=TM
000621          DO 165 J=1,4
000622          Y1(J)=Y(J)
000624      165 CONTINUE
000626          XDOT=SPEED(JSPD)
000630          PRINT 600,XDOT
          C
          C     SPEED DEPENDENT COMPUTATIONS
          C
000635          FA=FACOEF*XDOT**2
000640          ZF=THETA*EM*G-FA*HA/EL1
000645          ZR=EM*G-ZF
000647          CAFZF=CAF*ZF
000650          CARZR=CAR*ZR
 10652          ENRTYR=ENRTY/R**2
 00655          PRINT 610, ZF,ZR
          C
          C     B-MATRIX COEFFICIENTS(SPEED DEPENDENT)
          C
000664          BM(1,2)=-XDOT*(EM+ENRTYR)
000667          BM(2,1)=XDOT*ENRTYR
000670          BM(2,4)=FA*(CH+H-HA)
000674          BM(3,2)=-XDOT*EMCH
000676          PRINT 620
000702          PRINT 580,((BM(I,J),J=1,4),I=1,4)
          C
          C     D-MATRIX COEFFICIENTS(SPEED DEPENDENT)
          C
000720          DO 170 J=1,4
000722          DO 170 K=1,2
000723          DD(J,K)=0.0
000725      170 CONTINUE
000731          DD(1,1)=-CAFZF/XDOT
000733          DD(1,2)=-CAFZF*EL/XDOT
000735          DD(2,1)=-CARZR/XDOT
000737          DD(2,2)=CARZR*B/XDOT
          C
          C     COMPUTE C-MATRIX
          C
 00741          CALL MATMPY(EE,DD,ED,4,2,4)
  0745          DO 180 J=1,4
000747          DO 180 K=1,4
000750          BED(J,K)=BM(J,K)+ED(J,K)
```

```
 00757      180 CONTINUE
 00763          CALL MATMPY(AINV,BED,C,4,4,4)
 000767         PRINT 630
 000773         PRINT 580,((C(I,J),J=1,4),I=1,4)
          C
          C     F-MATRIX COEFFICIENTS(SPEED DEPENDENT)
          C
 001011         F(1)=CAFZF
 001013         F(2)=0.0
          C
          C     COMPUTE GG-MATRIX
          C
 001014         CALL MATMPY(EE,F,EF,4,2,1)
 001020         PRINT 491,(EF(J),J=1,4)
 001032         CALL MATMPY(AINV,EF,GG,4,4,1)
 001036         PRINT 492,(GG(J),J=1,4)
 001050         DO 160 J=1,4
 001052         GG(J)=GG(J)*DELTA
 001054      160 CONTINUE
 001056         PRINT 492,(GG(J),J=1,4)
          C
          C     PRINT HEADINGS
          C
 001067         PRINT 640
          C
          C     INTEGRATE EQUATIONS
          C
 001073         KPSTEP=1
 001074         DO 200 KSTEP=1,NSTEPS
 001076         CALL RKTTA1(Y1,K1,T1,4)
 001101         IF(KPSTEP.NE.KSTEP)GO TO 210
 001103         ACCLAT=XDOT*Y1(2)+K1(1)
 001106         PRINT 650,T1,(Y1(J),J=1,4),ACCLAT
 001124         KPSTEP=KPSTEP+NPSTEP
 001126      210 CALL RKTTA2(Y1,K1,DELT,T1,4)
 001132      200 CONTINUE
 001135      300 CONTINUE
 001137      350 CONTINUE
 001142          STOP
 001144      400 FORMAT(7F10.4)
 001144      410 FORMAT(2I10)
 001144      498 FORMAT(1H ,4I4)
 001144      499 FORMAT(1H ,10E16.6)
 001144      490 FORMAT(1H ,*EE-MATRIX*/8E14.6)
 001144      491 FORMAT(1H ,*EF-MATRIX*/8E14.6)
 001144      492 FORMAT(1H ,*GG-MATRIX*/8E14.6)
 001144      500 FORMAT(1H1,*VEHICLE CHARACTERISTICS*)
 001144      505 FORMAT(1H0,*Y-VECTOR*)
 001144      507 FORMAT(1H-,*FRAME*)
 001144      510 FORMAT(1H0,8X,*MASS*,9X,*X-INERTIA*,7X,*Y-INERTIA*,7X,*Z-INERTI
            16X,*X-Z PRODUCT*)
  1144       520 FORMAT(1H ,8E16.6)
 01144       530 FORMAT(1H0,*GEOMETRY*//6X,*WHEELBASE*,6X,*FR. AXLE CG*,6X,*RC HE
            1HT*,5X,*(CG - PC) HT.*,8X,*THETA*,11X,*EPSLN*)
 001144      540 FORMAT(1H0,5X,*WHL. RAD.*,4X,*CG - AERO. LOAD*,5X,*CD AREA*,9X,*
```

```
                1LTA*)
`01144        550 FORMAT(1H0,*SUSPENSION*//10X,*ROLL DAMPING*,23X,*ROLL STIFFNESS
                1X,*FRONT*,12X,*REAR*,11X,*FRONT*,12X,*REAR*)
001144        560 FORMAT(1H0,*TIRE PROPERTIES*//9X,*LATERAL FORCE*,19X,*RELAXATIO
                1ENGTH*/8X,*FRONT*,12X,*REAR*,11X,*FRONT*,12X,*REAR*)
001144        570 FORMAT(1H0,*A-MATRIX*)
001144        580 FORMAT(1H ,4E14.6)
001144        590 FORMAT(1H0,*A-INVERSE MATRIX*)
001144        600 FORMAT(1H-,*SPEED =*,E14.6)
001144        610 FORMAT(1H ,*ZF =*,E14.6,5X,*ZR =*,E14.6)
001144        620 FORMAT(1H0,*B-MATRIX*)
001144        630 FORMAT(1H0,*C-MATRIX*)
001144        640 FORMAT(1H0,3X,*TIME*,6X,*Y1DOT*,7X,*PSIDOT*,6X,*PHIDOT*,7X,*PHI
                16X,*LAT. ACC.*)
001144        650 FORMAT(1H ,E8.2,10E12.4)
001144            END
```

ORIGINAL PAGE IS
OF POOR QUALITY

ORIGINAL PAGE IS OF POOR QUALITY

```
GOLETA FORTRAN 1.3 * SEMI-AUTO RFL * (01-10-73)

                SUBROUTINE MATINV(A,ATEMP,B,BTEMP,E,TRI,TRAN,M)
          C     MATINV DETERMINES THE INVERSE OF A REAL MATRIX
          C     ATEMP IS THE INVERSE OF THE INPUT MATRIX A.
000013          REAL A(M,M),ATEMP(M,M),B(M,M),BTEMP(M,M),TRI(M,M),TRAN(M,M),
               1E(M,M)
000013          N=M
          C     STORE THE IDENTITY MATRIX
000014          DO 20 I=1,N
000016          DO 20 J=1,N
000017          IF(I.EQ.J)GO TO 10
000023          E(I,J)=0.
000024          GO TO 20
000025       10 E(I,J)=1.
000033       20 CONTINUE
          C
          C     INITIALIZE TRANSFORMED AND TRANSFORMATION MATRICES
          C
000040          CALL IDENT(TRI,A,N)
000043          CALL IDENT(TRAN,E,N)
          C
          C     TRANSFORM A-MATRIX TO UPPER TRIANGULAR FORM
          C
000051          IMIN=N-1
000053          DO 125 I=1,IMIN
          C     LOCATE NONZERO ELEMENT IN I-TH COLUMN
000060          DO 100 J=I,N
000061          IF(TRI(J,I).NE.0.)GO TO 110
000066      100 CONTINUE
000070          PRINT 500
000074          GO TO 200
000100      110 NOTZRO=J
000102          CALL IDENT(B,E,N)
000104          B(I,I)=0.
000114          B(NOTZRO,NOTZRO)=0.
000120          B(NOTZRO,I)=1.
000124          B(I,NOTZRO)=1.
          C     GET NONZRO ELEMENT IN (I,I) LOCATION)
000127          CALL MATMPY(B,TRI,ATEMP,N,N,N)
000133          CALL MATMPY(B,TRAN,BTEMP,N,N,N)
          C     GET ZEROES IN (I+1,I)-(N,I) LOCATIONS
000143          CALL IDENT(B,E,N)
000151          IPLUS=I+1
000153          DO 120 J=IPLUS,N
000160          B(J,I)=-ATEMP(J,I)/ATEMP(I,I)
000173      120 CONTINUE
000176          CALL MATMPY(B,ATEMP,TRI,N,N,N)
000201      125 CALL MATMPY(B,BTEMP,TRAN,N,N,N)
          C
          C     TRANSFORM A-MATRIX TO DIAGONAL FORM
          C
          C     CHECK DIAGONAL ELEMENTS
000217          DO 130 I=1,N
000221          IF(TRI(I,I).EQ.0.)GO TO 140
000225      130 CONTINUE
000230          GO TO 150
```

ORIGINAL PAGE IS OF POOR QUALITY

```
000233      140 WRITE(6,500)
000234          GO TO 200
000240      150 DO 170 I=1,IMIN
          C     GET ZEROES IN UPPER TRIANGLE
000242          NMI=N-I
000244          CALL IDENT(B,E,N)
000246          DO 160 J=1,NMI
000253          B(J,N+1-I)=-TRI(J,N+1-I)/TRI(N+1-I,N+1-I)
000274      160 CONTINUE
000277          CALL MATMPY(B,TRI,ATEMP,N,N,N)
000303          CALL MATMPY(B,TRAN,BTEMP,N,N,N)
000313          CALL IDENT(TRI,ATEMP,N)
000321      170 CALL IDENT(TRAN,BTEMP,N)
          C
          C     NORMALIZE THE DIAGONAL ELEMENTS
          C
000335          CALL IDENT(B,E,N)
000337          DO 180 J=1,N
000344          B(J,J)=1./TRI(J,J)
000354      180 CONTINUE
000356          CALL MATMPY(B,TRAN,ATEMP,N,N,N)
000363      200 RETURN
000364      500 FORMAT(1H0,18HMATRIX IS SINGULAR)
000364          END
```

GOLETA FORTRAN 1.3 * SEMI-AUTO RFL * (01-10-73)

```
                SUBROUTINE IDENT(A,B,N)
          C
          C     IDENT EQUATES MATRICES
          C
000006          REAL A(N,N),B(N,N)
000006          DO 10 I=1,N
000007          DO 10 J=1,N
000010          A(I,J)=B(I,J)
000017       10 CONTINUE
000022          RETURN
000022          END
```

ORIGINAL PAGE IS
OF POOR QUALITY

GOLETA FORTRAN 1.3 * SEMI-AUTO RFL * (01-10-73)

```
                SUBROUTINE MATMPY(A,B,C,NRA,NCANRB,NCB)
          C
          C     MATMPY MULTIPLIES MATRICES
          C
000011          REAL A(NRA,NCANRB),B(NCANRB,NCB),C(NRA,NCB)
000011          DO 10 J=1,NRA
000012          DO 10 K=1,NCB
000013          C(J,K)=0.
000017          DO 10 I=1,NCANRB
000020          C(J,K)=C(J,K)+A(J,I)*B(I,K)
000035       10 CONTINUE
000044          RETURN
          C
000044          END
```

GOLETA FORTRAN 1.3 * SEMI-AUTO RFL * (01-10-73)

```
                SUBROUTINE RKTTA1(Y1,EK1,T,N)
 000007         REAL Y1(20),EK1(20)
 000007         CALL DERIV(Y1,EK1,T,N)
 000010         RETURN
 000011         END
```

GOLETA FORTRAN 1.3 * SEMI-AUTO RFL * (01-10-73)

```
                SUBROUTINE RKTTA2(Y1,EK1,DELT,T,N)
          C
          C     RKTTA2 USES RUNGE-KUTTA TECHNIQUE FOR NUMERICAL INTEGRATION
          C
000010          REAL Y1(50),Y2(50),YTEMP(50),EK1(50),EK2(50),EK3(50),EK4(50)
000010          DO 50J=1,N
000011          YTEMP(J)=Y1(J)+DELT*EK1(J)/2.
000017       50 CONTINUE
000022          TT=T+DELT/2.
000024          CALL DERIV(YTEMP,EK2,TT,N)
000027          DO 60J=1,N
000034          YTEMP(J)=Y1(J)+DELT*EK2(J)/2.
000041       60 CONTINUE
000045          CALL DERIV(YTEMP,EK3,TT,N)
000050          DO 70J=1,N
000055          YTEMP(J)=Y1(J)+DELT*EK3(J)
000061       70 CONTINUE
000064          T=T+DELT
000065          CALL DERIV(YTEMP,EK4,T,N)
000070          DO 80J=1,N
000075          Y1(J)=Y1(J)+(EK1(J)+2.*(EK2(J)+EK3(J))+EK4(J))*(DELT/6.)
000107       80 CONTINUE
000111          RETURN
000112      650 FORMAT(1H ,8E14.6)
000112          END
```

ORIGINAL PAGE IS
OF POOR QUALITY

GOLETA FORTRAN 1.3 * SEMI-AUTO RFL * (01-10-73)

```
                SUBROUTINE DERIV(Y,K,T,N)
          C
          C     DERIV SETS UP K-MATRIX FOR USE IN INTEGRATION ROUTINE
          C
000007          COMMON C(4,4),GG(4)
000007          REAL Y(10),K(10)
000007          DO 10 I=1,4
000010          K(I)=GG(I)
000012          DO 10 J=1,4
000014          K(I)=K(I)+C(I,J)*Y(J)
000022       10 CONTINUE
000026          RETURN
000026          END
```

```
VEHICLE CHARACTERISTICS
   1   3 500   5
    1.000000E-02    1.000000E+01    2.000000E+01    3.000000E+01

Y-VECTOR
    0.              0.              0.              0.

FRAME

        MASS          X-INERTIA       Y-INERTIA       Z-INERTIA       X-Z PRODUCT
    1.857000E+03    8.420000E+02    5.000000E+00    4.870000E+03    5.100000E+01

GEOMETRY

     WHEELBASE       FR. AXLE CG      RC HEIGHT      (CG - RC) HT.        THETA           EPSLN
    2.900000E+00    1.290000E+00    1.860000E-01    4.600000E-01    5.550000E-01    1.440000E-01

     WHL. RAD.     CG - AERO. LOAD     CD AREA          DELTA
    3.120000E-01    5.500000E-01    1.260000E+00    2.000000E-02

SUSPENSION

         ROLL DAMPING                          ROLL STIFFNESS
       FRONT            REAR              FRONT            REAR
    4.900000E+03    1.350000E+03    3.190000E+04    6.700000E+03

TIRE PROPERTIES

        LATERAL FORCE                      RELAXATION LENGTH
       FRONT            REAR              FRONT            REAR
    9.430000E+00    9.460000E+00    2.500000E-01    2.500000E-01

A-MATRIX
  1.857000E+03  0.            8.542200E+02  0.
  0.            4.870000E+03  6.100000E+01  0.
  8.542200E+02  6.100000E+01  1.234941E+03  0.
  0.            0.            0.            1.000000E+00

A-INVERSE MATRIX
  7.900376E-04  6.849216E-06 -5.468145E-04  0.
  6.849216E-06  2.055253E-04 -1.488960E-05  0.
 -5.468145E-04 -1.488960E-05  1.188727E-03  0.
  0.            0.            0.            1.000000E+00
EE-MATRIX
 1.000000E+00  1.000000E+00  1.230000E+00 -1.610000E+00 -2.400000E-04 -4.178400E-01  0.            0.

SPEED =   1.000000E+01
ZF =  1.003351E+04      ZR =  8.118030E+03

B-MATRIX
  0.           -1.909364E+04  0.            0.
  5.136423E+02  0.            0.            7.050240E+00
  0.           -8.542200E+03 -6.250000E+03 -3.022256E+04
  0.            0.            1.000000E+00  0.

C-MATRIX
 -1.453232E+01 -6.719015E+00  3.417591E+00  1.652624E+01
  2.321369E-01 -6.918577E+00  9.305001E-02  4.514524E-01
  1.254074E+01 -6.109063E+00 -7.429545E+00 -3.592661E+01
  0.            0.            1.000000E+00  0.
```

EF-MATRIX
9.509820E+04 1.897639E+05 -2.042119E+01 0.
GG-MATRIX
6.799591E+01 2.314235E+01 -4.818612E+01 0.
GG-MATRIX
1.359719E+00 4.629470E-01 -9.637224E-01 0.

TIME	YIDOT	PSIDOT	PHIDOT	PHI	LAT. ACC.
0.	0.	0.	0.	0.	1.3597E+00
5.00E-02	4.3070E-02	1.3746E-02	-2.8607E-02	-8.5186E-04	6.8674E-01
1.00E-01	5.7267E-02	3.3880E-02	-3.6977E-02	-2.5355E-03	4.7039E-01
1.50E-01	5.9726E-02	4.3898E-02	-3.9280E-02	-4.4532E-03	4.2795E-01
2.00E-01	5.7622E-02	5.0940E-02	-4.0232E-02	-6.4428E-03	4.4549E-01
2.50E-01	5.3940E-02	5.5550E-02	-4.0995E-02	-8.4739E-03	4.7894E-01
3.00E-01	4.9914E-02	5.9245E-02	-4.1555E-02	-1.0539E-02	5.1254E-01
3.50E-01	4.6050E-02	6.1567E-02	-4.1633E-02	-1.2621E-02	5.4163E-01
4.00E-01	4.2550E-02	6.3135E-02	-4.0996E-02	-1.4690E-02	5.6562E-01
4.50E-01	3.9491E-02	6.4170E-02	-3.9539E-02	-1.6787E-02	5.8516E-01
5.00E-01	3.6889E-02	6.4850E-02	-3.7279E-02	-1.8631E-02	6.0113E-01
5.50E-01	3.4740E-02	6.5291E-02	-3.4317E-02	-2.0423E-02	6.1429E-01
6.00E-01	3.3018E-02	6.5558E-02	-3.0812E-02	-2.2053E-02	6.2523E-01
6.50E-01	3.1692E-02	6.5712E-02	-2.6342E-02	-2.3498E-02	5.3437E-01
7.00E-01	3.0722E-02	6.5810E-02	-2.2892E-02	-2.4745E-02	6.4200E-01
7.50E-01	3.0067E-02	6.5862E-02	-1.8830E-02	-2.5787E-02	6.4835E-01
8.00E-01	2.9680E-02	6.5891E-02	-1.4902E-02	-2.6630E-02	6.5356E-01
8.50E-01	2.9517E-02	6.5910E-02	-1.1228E-02	-2.7282E-02	6.5778E-01
9.00E-01	2.9533E-02	6.5926E-02	-7.8960E-03	-2.7750E-02	6.6111E-01
9.50E-01	2.9688E-02	6.5943E-02	-4.9651E-03	-2.8078E-02	6.6365E-01
1.00E+00	2.9943E-02	6.5963E-02	-2.4682E-03	-2.8262E-02	6.6550E-01
1.05E+00	3.0264E-02	6.5987E-02	-4.1432E-04	-2.8332E-02	6.6677E-01
1.10E+00	3.0624E-02	6.6014E-02	1.2068E-03	-2.8311E-02	6.6753E-01
1.15E+00	3.0996E-02	6.6043E-02	2.4208E-03	-2.8218E-02	6.6789E-01
1.20E+00	3.1363E-02	6.6074E-02	3.2647E-03	-2.8075E-02	6.6791E-01
1.25E+00	3.1709E-02	6.6105E-02	3.7828E-03	-2.7897E-02	6.6769E-01
1.30E+00	3.2024E-02	6.6135E-02	4.0237E-03	-2.7701E-02	6.6728E-01
1.35E+00	3.2300E-02	6.6163E-02	4.0373E-03	-2.7499E-02	6.6675E-01
1.40E+00	3.2534E-02	6.6190E-02	3.8722E-03	-2.7300E-02	6.6614E-01
1.45E+00	3.2725E-02	6.6213E-02	3.5744E-03	-2.7114E-02	6.6552E-01
1.50E+00	3.2874E-02	6.6233E-02	3.1854E-03	-2.6945E-02	6.6499E-01
1.55E+00	3.2982E-02	6.6250E-02	2.7419E-03	-2.6796E-02	6.6430E-01
1.60E+00	3.3055E-02	6.6264E-02	2.2748E-03	-2.6671E-02	6.6377E-01
1.65E+00	3.3097E-02	6.6274E-02	1.8095E-03	-2.6569E-02	6.6329E-01
1.70E+00	3.3112E-02	6.6282E-02	1.3657E-03	-2.6489E-02	6.6289E-01
1.75E+00	3.3106E-02	6.6287E-02	9.5819E-04	-2.6432E-02	6.6256E-01
1.80E+00	3.3083E-02	6.6290E-02	5.9669E-04	-2.6393E-02	6.6231E-01
1.85E+00	3.3049E-02	6.6291E-02	2.8700E-04	-2.6371E-02	6.6212E-01
1.90E+00	3.3005E-02	6.6290E-02	3.1398E-05	-2.6363E-02	6.6199E-01
1.95E+00	3.2959E-02	6.6289E-02	-1.7370E-04	-2.6367E-02	6.6192E-01
2.00E+00	3.2913E-02	6.6286E-02	-3.2201E-04	-2.6379E-02	6.6189E-01
2.05E+00	3.2862E-02	6.6283E-02	-4.2691E-04	-2.6398E-02	6.6190E-01
2.10E+00	3.2818E-02	6.6280E-02	-4.9083E-04	-2.6421E-02	6.6194E-01
2.15E+00	3.2777E-02	6.6276E-02	-5.1990E-04	-2.6447E-02	6.6200E-01
2.20E+00	3.2742E-02	6.6273E-02	-5.2038E-04	-2.6473E-02	6.6207E-01
2.25E+00	3.2712E-02	6.6270E-02	-4.9782E-04	-2.6499E-02	6.6215E-01
2.30E+00	3.2687E-02	6.6267E-02	-4.5983E-04	-2.6523E-02	6.6223E-01
2.35E+00	3.2669E-02	6.6264E-02	-4.1437E-04	-2.6544E-02	6.6232E-01
2.40E+00	3.2654E-02	6.6262E-02	-3.5110E-04	-2.6563E-02	6.6239E-01
2.45E+00	3.2645E-02	6.6261E-02	-2.9096E-04	-2.6579E-02	6.6246E-01
2.50E+00	3.2640E-02	6.6259E-02	-2.3115E-04	-2.6592E-02	6.6252E-01
2.55E+00	3.2638E-02	6.6258E-02	-1.7420E-04	-2.6602E-02	6.6257E-01
2.60E+00	3.2639E-02	6.6258E-02	-1.2195E-04	-2.6610E-02	6.6262E-01
2.65E+00	3.2642E-02	6.6257E-02	-7.5658E-05	-2.6615E-02	6.6265E-01

HYSSG

PARAMETERS		UNITS	DESCRIPTION
EQUATION	PROGRAM		
	NCASE	—	NUMBER OF CASES
	NSPD	—	NUMBER OF SPEEDS
	SPEED (10)	m/sec	SPEEDS
m_r	EM	KG.	MASS OF VEHICLE
I_{rx}	ENRTX	$KG \cdot m^2$	MOMENTS OF INERTIA WITH RESPECT
I_{ry}	ENRTY	$KG \cdot m^2$	TO X, Y, AND Z AXES
I_{rz}	ENRTZ	$KG \cdot m^2$	
C_{rxz}	CXZ	$KG \cdot m^2$	PRODUCT OF INERTIA WITH RESPECT TO X + Z AXES
ℓ_1	EL1	m	WHEEL BASE LENGTH
ℓ	EL	m	LENGTH FRONT AXLE TO CENTER OF GRAVITY
h_r	H	m	ROLL CENTER HEIGHT
Δh_r	CH	m	(CENTER OF GRAVITY - ROLL CENTER) HEIGHT
θ	THETA	—	FRACTION WT. ON FRONT WHEEL W/ STATIC CONDITION
ϵ	EPSLN	RAD	INCLINATION OF ROLL AXIS
R	R	m	WHEEL RADIUS
h_a	HA	m	AERODYNAMIC CENTER OF EFFORT
$C_D A$	CDA	—	DRAG COEFFICIENT * FRONTAL AREA
δ	DELTA	RAD	STEER ANGLE
$C_{\phi f}$	CPF	N/RAD	ROLL DAMPING - FRONT (COEFFICIENT)
$C_{\phi r}$	CPR	N/RAD	ROLL DAMPING - REAR (COEFFICIENT)
$K_{\phi f}$	EKPR	N/RAD	ROLL STIFFNESS - FRONT (COEFFICIENT)
$K_{\phi r}$	EKPF	N/RAD	ROLL STIFFNESS - REAR (COEFFICIENT)
$C_{\alpha f}$	CAF	N/RAD	LATERAL FORCE - FRONT (COEFFICIENT)
$C_{\alpha r}$	CAR	N/RAD	LATERAL FORCE - REAR (COEFFICIENT)
σ_f	SIGMAF	M	RELAXATION LENGTH - FRONT
σ_r	SIGMAR	M	RELAXATION LENGTH - REAR

ORIGINAL PAGE IS
OF POOR QUALITY

HYSSG

VARIABLES		UNITS	DESCRIPTION
EQUATION	PROGRAM		
b	B	m	EL1 - EL (see list of input parameters)
	BED(4,4)	—	BM-MATRIX + ED-MATRIX
	BEDINV(4,4)	—	INVERSE OF BED-MATRIX
	BM(4,4)	—	COEFFICIENT MATRIX
	BMT(4,4)	—	MATRICES USED IN MATRIX INVERSION
	BMTT(4,4)	—	ROUTINE
$C_{\alpha f} Z_f$	CAFZF	N/RAD	$C_{\alpha f} * Z_f$
$C_{\alpha r} Z_r$	CARZR	N/RAD	$C_{\alpha r} * Z_r$
	DD(2,4)	—	COEFFICIENT MATRIX
	ED(4,4)	—	EE-MATRIX * DD-MATRIX
	EF(4)	—	EE-MATRIX * F-MATRIX
	EE(4,2)	—	COEFFICIENT MATRIX
	EMT(4,4)	—	MATRIX USED IN MATRIX INVERSION ROUTINE
$m_r \Delta h_r$	EMCH	—	MASS * (CENTER GRAVITY - ROLL CENTER) HEIGHT
	ENRTYR	KG-m²	ROTATIONAL INERTIA OF WHEELS
	F(2)	—	COEFFICIENT MATRIX
F_A	FA	—	FACOEF * SPEED
$0.612 C_o A$	FACOEF	—	0.612 * DRAG COEFFICIENT * FRONTAL AREA
g	-	N/RAD	GRAVITY
	TRAN(4,4)	—	MATRICES USED IN MATRIX INVERSION
	TRI(4,4)	—	ROUTINE
$\dot{x}_1$	XDOT	m/sec	VEHICLE SPEED FOR SPECIFIED SPEED LOOP
	Y(10)	—	BEDINV-MATRIX * EF-MATRIX
	Y1(10)	—	Y-MATRIX / DELTA
Z_f	ZF	KG.	LATERAL LOAD ON FRONT TIRES
Z_r	ZR	KG.	LATERAL LOAD ON REAR TIRES

GRC
GENERAL RE[illegible]RCH CORPORATION

FORTRAN CODING FORM

PROGRAM: HYSSG

ROUTINE: Input Format

NAME:

DATE:

PAGE OF

FORTRAN STATEMENT: 0 = ZERO, 0 = ALPHA 0; 1 = ONE, 1 = ALPHA 1; 2 = TWO, 2 = ALPHA 2

STATEMENT NO.	CONT									SERIAL NUMBER
	N	CASE	NSPD							
SPEED(1)				SPEED(NSPD)						
			MASS PROPERTIES							
		EM	ENRTX	ENRTY	ENRTZ	CXZ				
			GEOMETRICAL PROPERTIES							
		EL1	EL	H	CH	THETA	EPSLN	R		
		HA	CDA	DELTA						
			TIRE PROPERTIES							
		CPF	CPR	EKPF	EKPR	CAF	CAR	SIGMAF		
	S	IGMAR								

[illegible] PAGE IS [illegible]TIALITY

HYSSG

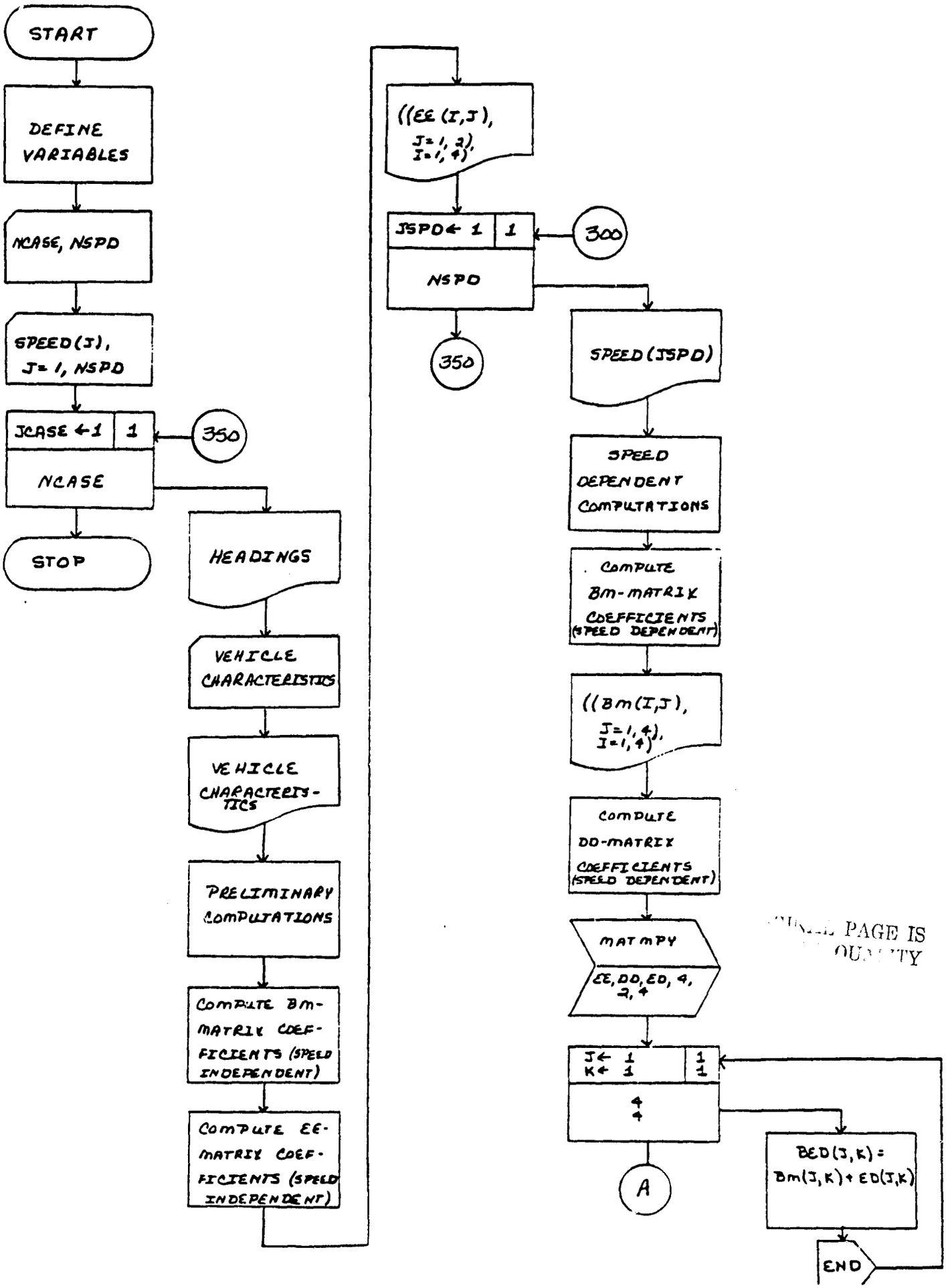

ORIGINAL PAGE IS OF POOR QUALITY

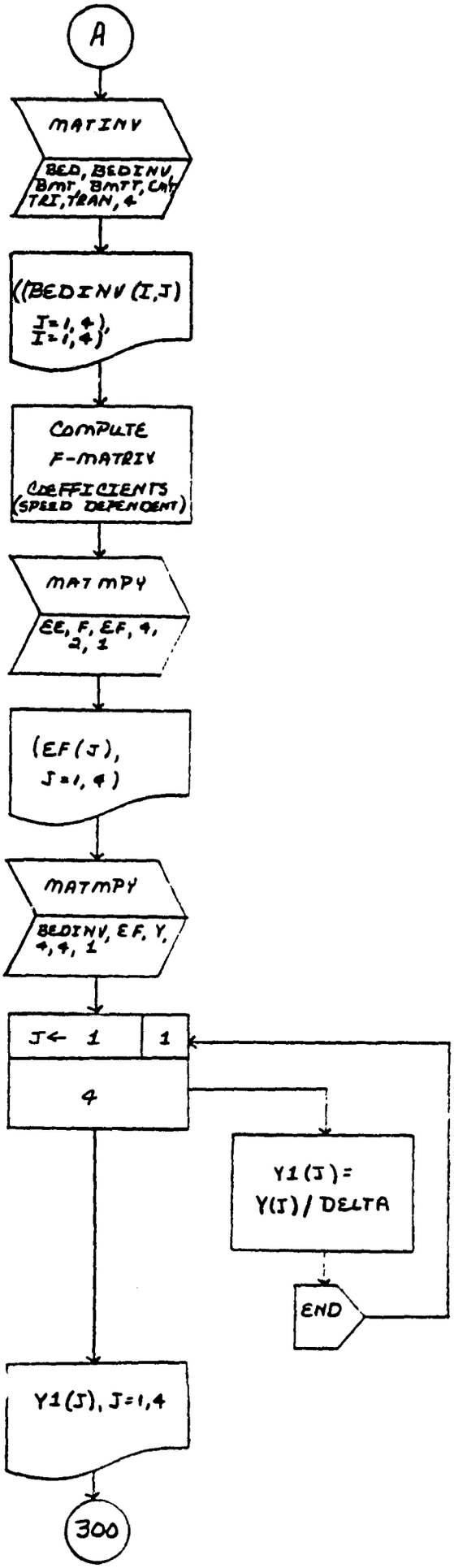
A
MATINV
BED, BEDINV, BMT, BMTT, CAT, TRI, TRAN, 4
((BEDINV (I,J) J=1,4), I=1,4)
COMPUTE F-MATRIX COEFFICIENTS (SPEED DEPENDENT)
MATMPY
EE, F, EF, 4, 2, 1
(EF(J), J=1,4)
MATMPY
BEDINV, EF, Y, 4, 4, 1
J← 1
1
4
Y1(J)= Y(J)/DELTA
END
Y1(J), J=1,4
300

PAGE IS
ITY

GOLETA FORTRAN 1.3 * SEMI-AUTO RFL * (01-10-73)

```
                PROGRAM HYSSG
          C
          C     DEFINE VARIABLES
          C
000003          REAL BM(4,4),BEDINV(4,4)
000003          REAL EE(4,2),DD(2,4),F(2),ED(4,4),EF(4),BED(4,4)
000003          REAL BMT(4,4),BMTT(4,4),EMT(4,4),TRI(4,4),TRAN(4,4)
000003          REAL SPEED(12)
000003          REAL Y(10),Y1(10)
          C
          C     READ INPUT
          C
000003          READ 410, NCASE,NSPD
000013          READ 400,(SPEED(J), J=1,NSPD)
          C
          C     CASE LOOP
          C
000026          DO 350 JCASE=1,NCASE
          C
          C     PRINT HEADINGS
          C
000030          PRINT 500
000033          PRINT 507
          C
          C     INPUT MASS PROPERTIES
          C
000037          READ 400,EM,ENRTX,ENRTY,ENRTZ,CXZ
          C
          C     INPUT GEOMETRICAL PROPERTIES
000055          READ 400,EL1,EL,H,CH,THETA,EPSLN,R,HA,CDA,DELTA
          C
          C     TIRE PROPERTIES
          C
000105          READ 400,CPF,CPR,EKPF,EKPR,CAF,CAR,SIGMAF,SIGMAR
          C
          C     PRINT VEHICLE CHARACTERISTICS
000131          PRINT 510
000135          PRINT 520,EM,ENRTX,ENRTY,ENRTZ,CXZ
000153          PRINT 530
000157          PRINT 520,EL1,EL,H,CH,THETA,EPSLN
000177          PRINT 540
000203          PRINT 520,R,HA,CDA,DELTA
000217          PRINT 550
000223          PRINT 520,CPF,CPR,EKPF,EKPR
000237          PRINT 560
000243          PRINT 520,CAF,CAR,SIGMAF,SIGMAR
          C
          C     PRILIMINARY COMPUTATIONS
          C
000257          B=EL1-EL
000261          FACCEF=0.612*CDA
000263          G=9.807
  0265          EMCH=EM*CH
          C
          C     B-MATRIX COEFFICIENTS(SPEED INDEPENDENT)
```

```
          C
000267          DO 140 J=1,4
000270          DO 140 K=1,4
000271          BM(J,K)=0.0
000274      140 CONTINUE
000277          BM(3,3)=-CPF-CPR
000302          BM(3,4)=EMCH*G-EKPF-EKPR
000306          BM(4,3)=1.0
          C
          C     E-MATRIX COEFFICIENTS(SPEED INDEPENDENT)
          C
000307          DO 150 J=1,2
000311          DO 150 K=1,4
000312          EE(J,K)=0.0
000315      150 CONTINUE
000320          EE(1,1)=1.0
000322          EE(1,2)=1.0
000323          EE(2,1)=EL
000324          EE(2,2)=-B
000326          EE(3,1)=-H+EL*EPSLN
000331          EE(3,2)=-H-B*EPSLN
000333          PRINT 490,((EE(I,J),J=1,2),I=1,4)
          C
          C     SPEED LOOP
          C
000350          DO 300 JSPD=1,NSPD
 00352          XDOT=SPEED(JSPD)
000354          PRINT 600,XDOT
          C
          C     SPEED DEPENDENT COMPUTATIONS
          C
000361          FA=FACOEF*XDOT**2
000364          ZF=THETA*EM*G-FA*HA/EL1
000371          ZR=EM*G-ZF
000373          CAFZF=CAF*ZF
000374          CARZR=CAR*ZR
000376          ENRTYR=ENRTY/R**2
000401          PRINT 610, ZF,ZR
          C
          C     B-MATRIX COEFFICIENTS(SPEED DEPENDENT)
          C
000410          BM(1,2)=-XDOT*(EM+ENRTYR)
000413          BM(2,1)=XDOT*ENRTYR
000414          BM(2,4)=FA*(CH+H-HA)
000420          BM(3,2)=-XDOT*EMCH
000422          PRINT 620
000426          PRINT 580,('BM(I,J),J=1,4),I=1,4)
          C
          C     D-MATRIX COEFFICIENTS(SPEED DEPENDENT)
          C
000444          DO 170 J=1,4
 00446          DO 170 K=1,2
 00447          DD(J,K)=0.0
000451      170 CONTINUE
000455          DD(1,1)=-CAFZF/XDOT
```

ORIGINAL PAGE IS
OF POOR QUALITY

```
000457          DD(1,2)=-CAFZF*EL/XDOT
 00461          DD(2,1)=-CARZR/XDOT
000463          DD(2,2)=CARZR*B/XDOT
          C
          C     COMPUTE BEDINV MATRIX
          C
000465          CALL MATMPY(EE,DD,ED,4,2,4)
000471          DO 180 J=1,4
000473          DO 180 K=1,4
000474          BED(J,K)=BM(J,K)+ED(J,K)
000503      180 CONTINUE
000507          CALL MATINV(BED,BEDINV,BMT,BMTT,EMT,TRI,TRAN,4)
000516          PRINT 590
000522          PRINT 580,((BEDINV(I,J),J=1,4),I=1,4)
          C
          C     F-MATRIX COEFFICIENTS(SPEED DEPENDENT)
          C
000540          F(1)=CAFZF
000542          F(2)=0.0
          C
          C     COMPUTE Y-MATRIX
          C
000543          CALL MATMPY(EE,F,EF,4,2,1)
000547          PRINT 491,(EF(J),J=1,4)
000561          DO 190 J=1,4
000563          EF(J)=EF(J)*DELTA
 00565          DO 190 K=1,4
000567          BEDINV(J,K)=-BEDINV(J,K)
000572      190 CONTINUE
000575          CALL MATMPY(BEDINV,EF,Y,4,4,1)
000601          DO 200 J=1,4
000603          Y1(J)=Y(J)/DELTA
000606      200 CONTINUE
000607          PRINT 640
000613          PRINT 650,(Y1(J),J=1,4)
000625      300 CONTINUE
000630      350 CONTINUE
000632          STOP
000634      400 FORMAT(7F10.6)
000634      410 FORMAT(2I10)
000634      490 FORMAT(1H0,*EE-MATRIX*,2(/4E14.6))
000634      491 FORMAT(1H0,*FF-MATRIX*/2(4E14.6)
000634      500 FORMAT(1H1,*VEHICLE CHARACTERISTICS*)
000634      507 FORMAT(1H-,*FRAME*)
000634      510 FORMAT(1H0,8X,*MASS*,9X,*X-INERTIA*,7X,*Y-INERTIA*,7X,*Z-INERTI
               16X,*X-Z PRODUCT*)
000634      520 FORMAT(1H ,9E16.6)
000634      530 FORMAT(1H0,*GEOMETRY*//6X,*WHEELBASE*,6X,*FR. AXLE CG*,6X,*RC H
               1HT*,5X,*(CG - RC) HT.*,8X,*THETA*,11X,*EPSLN*)
000634      540 FORMAT(1H0,5X,*WHL. RAD.*,4X,*CG - AERO. LOAD*,5X,*CD AREA*,6X,
               1EER ANGLE*)
000634      550 FORMAT(1H0,*SUSPENSION*//10X,*ROLL DAMPING*,23X,*ROLL STIFFNESS
               1X,*FRONT*,12X,*REAR*,11X,*FRONT*,12X,*REAR*)
000634      560 FORMAT(1H0,*TIRE PROPERTIES*//9X,*LATERAL FORCE*,19X,*RELAXATIC
               1ENGTH*/8X,*FRONT*,12X,*REAR*,11X,*FRONT*,12X,*REAR*)
```

ORIGINAL PAGE IS
OF POOR QUALITY

```
000634      580 FORMAT(1H ,4E14.6)
 00634      590 FORMAT(1H0,*BED-INVERSE MATRIX*)
000634      600 FORMAT(1H-,*SPEED =*,E14.6)
000634      610 FORMAT(1H ,*ZF =*,E14.6,5X,*ZR =*,E14.6)
000634      620 FORMAT(1H0,*B-MATRIX*)
000634      640 FORMAT(1H0,4X,*Y1DOT*,7X,*PSIDOT*,6X,*PHIDOT*,7X,*PHI*)
000634      650 FORMAT(1H ,10E12.4)
000634          END
```

GOLETA FORTRAN 1.3 * SEMI-AUTO RFL * (01-10-73)

```
                SUBROUTINE MATINV(A,ATEMP,B,BTEMP,E,TRI,TRAN,M)
          C     MATINV DETERMINES THE INVERSE OF A REAL MATRIX
          C     ATEMP IS THE INVERSE OF THE INPUT MATRIX A.
000013          REAL A(M,M),ATEMP(M,M),B(M,M),BTEMP(M,M),TRI(M,M),TRAN(M,M),
               1E(M,M)
000013          N=M
          C     STORE THE IDENTITY MATRIX
000014          DO 20 I=1,N
000016          DO 20 J=1,N
000017          IF(I.EQ.J)GO TO 10
000020          E(I,J)=0.
000024          GO TO 20
000025       10 E(I,J)=1.
000033       20 CONTINUE
          C
          C     INITIALIZE TRANSFORMED AND TRANSFORMATION MATRICES
          C
000040          CALL IDENT(TRI,A,N)
000043          CALL IDENT(TRAN,E,N)
          C
          C     TRANSFORM A-MATRIX TO UPPER TRIANGULAR FORM
          C
000051          IMIN=N-1
000053          DO 125 I=1,IMIN
          C     LOCATE NONZERO ELEMENT IN I-TH COLUMN
000060          DO 100 J=I,N
000061          IF(TRI(J,I).NE.0.)GO TO 110
000066      100 CONTINUE
000070          PRINT 500
000074          GO TO 200
000100      110 NOTZRO=J
000102          CALL IDENT(C,E,N)
000104          B(I,I)=C.
000114          B(NOTZRO,NOTZRO)=0.
000120          B(NOTZRO,I)=1.
000124          B(I,NOTZRO)=1.
          C     GET NONZRO ELEMENT IN (I,I) LOCATION)
000127          CALL MATMPY(B,TRI,ATEMP,N,N,N)
000133          CALL MATMPY(B,TRAN,BTEMP,N,N,N)
          C     GET ZEROES IN (I+1,I)-(N,I) LOCATIONS
000143          CALL IDENT(B,E,N)
000151          IPLUS=I+1
000153          DO 120 J=IPLUS,N
000160          B(J,I)=-ATEMP(J,I)/ATEMP(I,I)
000173      120 CONTINUE
000176          CALL MATMPY(B,ATEMP,TRI,N,N,N)
000201      125 CALL MATMPY(B,BTEMP,TRAN,N,N,N)
          C
          C     TRANSFORM A-MATRIX TO DIAGONAL FORM
          C
          C     CHECK DIAGONAL ELEMENTS
000217          DO 130 I=1,N
000221          IF(TRI(I,I).EQ.0.)GO TO 140
000225      130 CONTINUE
000230          GO TO 150
```

```
000230      140 WRITE(6,500)
000234          GO TO 200
000240      150 DO 170 I=1,IMIN
          C     GET ZEROES IN UPPER TRIANGLE
000242          NMI=N-I
000244          CALL IDENT(B,E,N)
000246          DO 160 J=1,NMI
000253          B(J,N+1-I)=-TRI(J,N+1-I)/TRI(N+1-I,N+1-I)
000274      160 CONTINUE
000277          CALL MATMPY(B,TRI,ATEMP,N,N,N)
000303          CALL MATMPY(B,TRAN,BTEMP,N,N,N)
000313          CALL IDENT(TRI,ATEMP,N)
000321      170 CALL IDENT(TRAN,BTEMP,N)
          C
          C     NORMALIZE THE DIAGONAL ELEMENTS
          C
000335          CALL IDENT(B,E,N)
000337          DO 180 J=1,N
000344          B(J,J)=1./TRI(J,J)
000354      180 CONTINUE
000356          CALL MATMPY(B,TRAN,ATEMP,N,N,N)
000363      200 RETURN
000364      500 FORMAT(1H0,18HMATRIX IS SINGULAR)
000364          END
```

GOLETA FORTRAN 1.3 * SEMI-AUTO RFL * (01-10-73)

```
                SUBROUTINE IDENT(A,B,N)
          C
          C     IDENT EQUATES MATRICES
          C
000006          REAL A(N,N),B(N,N)
000006          DO 10 I=1,N
000007          DO 10 J=1,N
000010          A(I,J)=B(I,J)
000017       10 CONTINUE
000022          RETURN
000022          END
```

GOLETA FORTRAN 1.3 * SEMI-AUTO RFL * (01-10-73)

```
                SUBROUTINE MATMPY(A,B,C,NRA,NCANRB,NCB)
          C
          C     MATMPY MULTIPLIES MATRICES
          C
000011          REAL A(NRA,NCANRB),B(NCANRB,NCB),C(NRA,NCB)
000011          DO 10 J=1,NRA
000012          DO 10 K=1,NCB
000013          C(J,K)=0.
000017          DO 10 I=1,NCANRB
000020          C(J,K)=C(J,K)+A(J,I)*B(I,K)
000035       10 CONTINUE
000044          RETURN
          C
000044          END
```

```
VEHICLE CHARACTERISTICS

FRAME

        MASS          X-INERTIA        Y-INERTIA        Z-INERTIA        X-Z PRODUCT
    1.857000E+03    8.420000E+02     5.000000E+00     4.870000E+03    -6.100000E+01

GEOMETRY

     WHEELBASE       FR. AXLE CG       RC HEIGHT      (CG - RC) HT.        THETA            EPSLN
    2.900000E+00     1.290000E+00     1.860000E-01     4.600000E-01     5.550000E-01     1.440000E-01

     WHL. RAD.     CG - AERO. LOAD      CD AREA       STEER ANGLE
    3.120000E-01     5.500000E-01     1.200000E+00     2.000000E-01

SUSPENSION

          ROLL DAMPING                          ROLL STIFFNESS
        FRONT              REAR              FRONT              REAR
    4.900000E+03       1.350000E+03       3.190000E+04     6.700000E+03

TIRE PROPERTIES

         LATERAL FORCE                        RELAXATION LENGTH
        FRONT              REAR              FRONT              REAR
    9.430000E+00       9.460000E+00       2.500000E-01     2.500000E-01

EE-MATRIX
 1.000000E+00  1.000000E+00  1.290000E+00 -1.610000E+00
-2.400000E-04 -4.179400E-01  0.             0.


SPEED =  5.000000E+00
ZF =  1.010396E+04      ZP =  8.107644E+03

B-MATRIX
  0.            -9.541821E+03  0.             0.
  2.568212E+02  0.             0.             1.762560E+00
  0.            -4.271100E+03 -6.250000E+03 -3.022266E+04
  0.             0.             1.000000E+00  0.

BED-INVERSE MATRIX
 -3.060613E-05  3.064812E-06  1.787372E-10  1.117108E-06
 -1.338429E-06 -1.454785E-05 -8.484193E-10 -5.302614E-06
 -1.421085E-19  1.421085E-19  0.             1.000000E+00
 -5.849076E-06  7.671040E-06 -3.308730E-05 -2.057956E-01

EF-MATRIX
 8.517634E+04  1.098775E+05 -2.044232E+01  0.

    YIDOT        PSIDOT       PHIDOT        PHI
  2.2702E+00  1.7125E+00 -3.5192E-15 -3.4535E-01


SPEED =  1.000000E+01
ZF =  1.009751E+04      ZP =  8.118990E+03

B-MATRIX
  0.            -1.908364E+04  0.             0.
  5.136427E+02  0.             0.             7.050240E+00
  0.            -9.542200E+03 -6.250000E+03 -3.022266E+04
```

C1.5 Life Cycle Costs

Two changes have been made in LYFECC since its summarization appeared in the report from Phase I, "Mission Analysis and Performance Specification Studies Report". First, the method of computing the discount factor now matches the one described in "Hybrid Vehicle Potential Assessment Interim Progress Report", Appendix C, Electric and Hybrid Cost Handbook, R. Left, S. Heller, Draft #5030-162, Jet Propulsion Laboratory, Pasadena, California.

The second change involves the inclusion of replacement batteries down payment. This was omitted from operating and life cycle costs in the first version of the program.

ORIGINAL PAGE IS
OF POOR QUALITY

```
GOLETA FORTRAN 1.3 * SEMI-AUTO RFL * (01-10-73)

                 PROGRAM LYFECC
          C
          C      IFUEL CAN EQUAL 1 THRU 5 WITH THE FOLLOWING RESULTS
          C      IF IFUEL=1, PETROLEUM AND ELECTRICITY ARE BOTH NOMINAL
          C      IF IFUEL=2, PETROLEUM IS +30%
          C      IF IFUEL=3, PETROLEUM IS -30%
          C      IF IFUEL=4, ELECTRICITY IS +30%
          C      IF IFUEL=5, ELECTRICITY IS -10%
          C
000003           INTEGER KBR(11)
000003           REAL EKPY(11),RKF(11),TRCKF(11),AOC(5,11),YLCC(5,11),DF(11),
                1DAOC(11),DYLCC(5,11),VKT(11),PFCKM(11),PFCKN(11),PFCKP(11),
                1EFCKM(11),EFCKN(11),EFCKP(11),TFCK(5,11),TAOC(5),AOCK(5),
                1TLCC(5),ALCCK(5),TDLCC(5),DLCCK(5)
          C
          C      PRINT HEADING
          C
000003           PRINT 500
000007           READ 400,NCASE
000015           READ 400,NYEARS
000023           NYRM1=NYEARS-1
          C
          C      DISCOUNT FACTOR
          C
000025           DO 1 J=1,NYEARS
000027           DF(J)=1./(1.+.02)**(J-1)
 00037         1 CONTINUE
          C
          C      CASE LOOP
          C
000041           DO 350 JCASE=1,NCASE
000043           TK=0.
000044           BR=0.
000045           DO 5 J=1,NYEARS
000046           KBR(J)=0
000047         5 CONTINUE
          C
          C      INPUT
          C
000051           READ 410,CV,WV,WB,PHE,PM,PDP
000071           READ 410,GGPK,GDPK,EKWHPK,BOEM,BRK
000107           READ 410,(VKT(J),J=1,NYEARS),AVKT,EKT
000125           READ 410,(RKF(J),J=1,NYEARS)
000140           PRINT 510
000144           PRINT 520,CV,WV,WB,PHE,PM,PDP
000164           PRINT 530
000170           PRINT 520,GGPK,GDPK,EKWHPK,BRK,BOEM
          C
          C      MILEAGE
          C
000206           FACT=EKT/AVKT
 00210           DO 10 J=1,NYEARS
 00212           EKPY(J)=FACT*VKT(J)
000215        10 CONTINUE
          C
```

```
          C     SET BATTERY REPLACEMENT FLAG
          C
000217          DO 15 J=1,NYRM1
000220          BR=BR+EKPY(J)
000222          TK=TK+EKPY(J)
000224          IF(BR.LT.BRK)GO TO 15
000227          KBR(J)=1
000230          BR=BR-BRK
000231       15 CONTINUE
000234          IF(BR+EKPY(NYEARS).LE.BRK.OR.PM.EQ.0.)GO TO 18
000245          EKPY(NYEARS)=BRK-BR
000247          BR=BRK
000247          GO TO 19
000250       18 BR=BR+EKPY(NYEARS)
000253       19 TK=TK+EKPY(NYEARS)
000256          PRINT 533
000261          PRINT 534
000265          PRINT 590,(EKPY(J),J=1,11),TK
          C
          C     MAINTENANCE COSTS
          C
000301          HEMC=PHE/.746*.003106+.111818
000304          CMC=WV*.000006+.021742
000307          EMMC=PM/.746*.001242+.037273
000312          IF(PM.EQ.0.)EMMC=0.
000314          BMC=WB*.000248
000316          FMC=0.
000317          TMCK=HEMC+CMC+EMMC+BMC+FMC
          C
          C     REPAIR COST
          C
000324          HERC=PHE/.746*.00497+.173939
000327          CRC=WV*.000124+.59015
000332          EMRC=PM/.746*.00124+.05591
000335          IF(PM.EQ.0.)EMRC=0.
000337          ARC=WV*.00005
000341          TRC=(PHE+PM)/.746*.000808+.031061
000345          TRCK=HERC+CRC+EMRC+ARC+TRC
000352          DO 20 J=1,NYEARS
000354          TRCKF(J)=TRCK*RKF(J)
000357       20 CONTINUE
          C
          C     FUEL COST
          C
000361          IF(GGPK.EQ.0)GO TO 30
000362          DO 25 J=1,NYEARS
000363          PFCKN(J)=(20.90+.7479*(J-1))*GGPK
000371          PFCKP(J)=(27.17+.9723*(J-1))*GGPK
000377          PFCKM(J)=(14.63+.5235*(J-1))*GGPK
000405          EFCKN(J)=(4.23+.0108*(J-1))*EKWHPK
000413          EFCKM(J)=(3.81+.0097*(J-1))*EKWHPK
000421       25 EFCKP(J)=(5.50+.014*(J-1))*EKWHPK
 00431          GO TO 36
000432       30 DO 35 J=1,NYEARS
000434          PFCKN(J)=(19.36+.6599*(J-1))*GDPK
```

ORIGINAL PAGE IS
OF POOR QUALITY

```
000442          PFCKP(J)=(25.17+.8579*(J-1))*GOPK
000450          PFCKM(J)=(13.55+.4619*(J-1))*GOPK
000456          EFCKN(J)=(4.23+.0108*(J-1))*EKWHPK
000464          EFCKM(J)=(3.81+.0097*(J-1))*EKWHPK
000472       35 EFCKP(J)=(5.50+.014*(J-1))*EKWHPK
000502       36 PRINT 540
000506          PRINT 550,HEMC,CMC,EMMC,BMC,FMC,TMCK
000526          PRINT 560
000532          PRINT 550,HERC,CRC,EMRC,ARC,TRC,TRCK
000552          PRINT 570
000556          PRINT 571
000562          PRINT 572,(PFCKN(J),J=1,11)
000574          PRINT 573,(PFCKP(J),J=1,11)
000606          PRINT 574,(PFCKM(J),J=1,11)
000620          PRINT 575,(EFCKN(J),J=1,11)
000632          PRINT 576,(EFCKP(J),J=1,11)
000644          PRINT 577,(EFCKM(J),J=1,11)
000656          DO 37 J=1,11
000660          TFCK(1,J)=PFCKN(J)+EFCKN(J)
000664          TFCK(2,J)=PFCKP(J)+EFCKN(J)
000670          TFCK(3,J)=PFCKM(J)+EFCKN(J)
000674          TFCK(4,J)=PFCKN(J)+EFCKP(J)
000700       37 TFCK(5,J)=PFCKN(J)+EFCKM(J)
000706          PRINT 578
000711          PRINT 584,(TFCK(1,J),J=1,11)
          C
          C     COST LOOP
          C
000724          DO 300 JCOST=1,2
000726          TOCC=0.
000727          OOCK=0.
000730          DO 38 J=1,5
000731          TAOC(J)=0.
000732          AOCK(J)=0.
000733          TLCC(J)=0.
000734          ALCCK(J)=0.
000735          TDLCC(J)=0.
000736       38 DLCCK(J)=0.
          C
          C     PAYMENTS
          C
000741          PV=CV*2
000743          IF(JCOST.EQ.1)PV=7646.+1.25*(CV-3823.)
000751          PV=PV+PV*.05
000754          AL=PV-PV*POP
000756          AP=(AL+AL*.065*4.)/4.
          C
          C     YEARLY DEPENDENT COST
          C
000761          YDC1=33.+PV*.01+125.
000766          YDC2=33.+PV*.006+75.
          C
          C     BATTERY REPLACEMENT COST
          C
000772          BRC=2.*BOEM
```

```
000774          IF(JCOST.EQ.1)BRC=1.25*BOEM
 00777          BRC=BRC+BRC*.05
001002          ADPBR=BRC*PDP
001003          ALBR=BRC-ADPBR
001005          APBR=(ALBR+ALBR*.065*3.)/3.
001010          PRINT 585
001014          PRINT 586
001020          PRINT 590,BRC,ALBR,APBR,BR
          C
          C     OPERATING COSTS
          C
001034          DO 39 IFUEL=1,5
001036          AOC(IFUEL,1)=YOC1
001040          YOC=YOC1
001041          DO 40 J=2,NYEARS
001042          IF(J.GE.7)YOC=YOC2
001046          AOC(IFUEL,J)=(TMCK+TRCKF(J)+TFCK(IFUEL,J))/100.*EKPY(J)+YOC
001061       40 CONTINUE
001064          AOC(IFUEL,NYEARS)=AOC(IFUEL,NYEARS)-YOC2
001070          IF(NYEARS.LE.6)AOC(IFUEL,NYEARS)=AOC(IFUEL,NYEARS)+YOC2-YOC1
001076          DO 50 J=1,NYEARS
001100          IF (KBR(J).EQ.0)GO TO 50
001102          L=J+2
001104          DO 60 K=J,L
001105          IF(K.GT.NYEARS)GO TO 50
001110          AOC(IFUEL,J)=AOC(IFUEL,J)+ADPBR
 01114          AOC(IFUEL,K)=AOC(IFUEL,K)+APBR
.01120       60 CONTINUE
001122       50 TAOC(IFUEL)=TAOC(IFUEL)+AOC(IFUEL,J)
001131       39 AOCK(IFUEL)=TAOC(IFUEL)/TK
          C
          C     DISCOUNTED OPERATING COSTS
          C
001135          DO 80 J=1,NYEARS
001137          DAOC(J)=AOC(1,J)*DF(J)
001143       80 TDOC=TDOC+DAOC(J)
001147          DOCK=TDOC/TK
          C
          C     LIFE CYCLE COSTS COMPONENTS
          C
001151          VSV=.01*PV
001153          BSV=.5*BRC*(1.-BR/BRK)
          C
          C     LIFE CYCLE COSTS
          C
001157          DO 85 IFUEL=1,5
001161          YLCC(IFUEL,1)=AOC(IFUEL,1)+PV*PDP
001165          YLCC(IFUEL,NYEARS)=AOC(IFUEL,NYEARS)-BSV-VSV
001174          TLCC(IFUEL)=YLCC(IFUEL,1)+YLCC(IFUEL,NYEARS)
001200          DO 90 J=2,NYRM1
001201          YLCC(IFUEL,J)=AOC(IFUEL,J)
001206          IF(J.GE.2.AND.J.LE.5)YLCC(IFUEL,J)=YLCC(IFUEL,J)+AP
 01222       90 TLCC(IFUEL)=TLCC(IFUEL)+YLCC(IFUEL,J)
001231          ALCCK(IFUEL)=TLCC(IFUEL)/TK
          C
```

```
          C     DISCOUNTED LIFE CYCLE COSTS
          C
001234          DO 100 J=1,NYEARS
001235          DYLCC(IFUEL,J)=YLCC(IFUEL,J)*DF(J)
001243      100 TDLCC(IFUEL)=TDLCC(IFUEL)+DYLCC(IFUEL,J)
001250          DLCCK(IFUEL)=TDLCC(IFUEL)/TK
001252       85 CONTINUE
          C
          C     OUTPUT
          C
001254          PRINT 535,JCOST
001262          PRINT 588
001266          PRINT 591
001272          PRINT 590,( AOC(1,J),J=1,11),TAOC(1), AOCK(1)
001311          PRINT 595
001315          PRINT 591
001321          PRINT 590,(DAOC(J),J=1,11),TDOC,DOCK
001337          PRINT 600
001343          PRINT 591
001347          PRINT 590,(YLCC(1,J),J=1,11),TLCC(1),ALCCK(1)
001366          DO 120 IFUEL=1,5
001370          PRINT 610
001373          IF(IFUEL.EQ.1)GO TO 125
001375          IF(IFUEL.EQ.2)PRINT 579
001402          IF(IFUEL.EQ.3)PRINT 580
001410          IF(IFUEL.EQ.4)PRINT 581
001416          IF(IFUEL.EQ.5)PRINT 582
001424      125 PRINT 591
001430      120 PRINT 590,(DYLCC(IFUEL,J),J=1,11),TDLCC(IFUEL),DLCCK(IFUEL)
001451      300 CONTINUE
001453      350 CONTINUE
001456          STOP
001460      400 FORMAT(7I10)
001460      405 FORMAT(1H0,10I4)
001460      410 FORMAT(7E10.4)
001460      500 FORMAT(1H1,*LIFE CYCLE COST ESTIMATION*)
001460      510 FORMAT(1H1,*VEHICLE CHARACTERISTICS*/9X,*COST*,11X,*WEIGHT*,7X
               1TTERY WT.*,3X,*HEAT ENG. RATING*,1X,*ELEC. MOTOR RATING*,2X,*Z
               1N*)
001460      520 FORMAT(1H ,8E16.6)
001460      530 FORMAT(1H ,5X,*GAS LT/KM*,6X,*DIESEL LT/KM*,8X,*KWH/KM*,4X,*BA
               1Y REPLACE/KM*,4X,*BOEM*)
001460      533 FORMAT(1H0,*ANNUAL MILEAGE*)
001460      534 FORMAT(1H ,4X,*YEAR 0*,4X,*YEAR 1*,4X,*YEAR 2*,4X,*YEAR 3*,4X,
               1R 4*,4X,*YEAR 5*,4X,*YEAR 6*,4X,*YEAR 7*,4X,*YEAR 8*,4X,*YEAR
               1X,*YEAR 10*,4X,*TOTAL*)
001460      535 FORMAT(1H0,*COST CASE=*,I2)
001460      540 FORMAT(1H0,*MILEAGE DEPENDENT COSTS(CENTS/KM)*/2X,*MAINTENANCE
               15X,*HEAT ENGINE*,7X,*CHASSIS*,7X,*ELEC. MOTOR*,7X,*BATTERY*,9X
               1YWHEEL*,06X,*TOTAL*)
001460      550 FORMAT(1H ,8F15.4)
001460      560 FORMAT(1H ,1X,*REPAIR*/5X,*HEAT ENGINE*,7X,*CHASSIS*,7X,*ELEC.
               10R*,5X,*ACCESSORIES*,5X,*TRANSMISSION*,4X,*TOTAL*)
001460      570 FORMAT(1H ,1X,*FUEL*)
001460      571 FORMAT(1H+,17X,*YEAR 0*,4X,*YEAR 1*,4X,*YEAR 2*,4X,*YEAR 3*,4X
```

```
                1AR 4*,4X,*YEAR 5*,4X,*YEAR 6*,4X,*YEAR 7*,4X,*YEAR 8*,4X,*YEAR
                13X,*YEAR 10*)
001460      572 FORMAT(1H ,*PETRO(NOMIN)*,1X,12F10.4)
001460      573 FORMAT(1H ,*PETRO(+30%)*,2X,12F10.4)
001460      574 FORMAT(1H ,*PETRO(-30%)*, 2X,12F10.4)
001460      575 FORMAT(1H ,*ELECT(NOMIN)*,1X,12F10.4)
001460      576 FORMAT(1H ,*ELECT(+30%)*,2X,12F10.4)
001460      577 FORMAT(1H ,*ELECT(-10%)*, 2X,12F10.4)
001460      578 FORMAT(1H ,*TOTAL*)
001460      579 FORMAT(1H+,27X,*(PETROLEUM +30%)*)
001460      580 FORMAT(1H+,27X,*(PETROLEUM -30%)*)
001460      581 FORMAT(1H+,27X,*(ELECTRICITY +30%)*)
001460      582 FORMAT(1H+,27X,*(ELECTRICITY -10%)*)
001460      584 FORMAT(1H+,13X,12F10.4)
001460      585 FORMAT(1H0,*BATTERY REPLACEMENT*)
001460      586 FORMAT(1H ,3X,*BR COST*,3X,*BR LOAN*,2X,*BR PAYMT*,1X,*MILEAGE-
                1T BATTERY SET*)
001460      588 FORMAT(1H ,*ANNUAL OPERATING COSTS*)
001460      589 FORMAT(1H ,11F10.4)
001460      590 FORMAT(1H ,12F10.2,F10.5)
001460      591 FORMAT(1H ,4X,*YEAR 0*,4X,*YEAR 1*,4X,*YEAR 2*,4X,*YEAR 3*,4X,*
                1R 4*,4X,*YEAR 5*,4X,*YEAR 6*,4X,*YEAR 7*,4X,*YEAR 8*,4X,*YEAR 9
                1X,*YEAR 10*,4X,*TOTAL*,5X,*PER KM*)
001460      595 FORMAT(1H0,*DISCOUNTED ANNUAL OPERATING COSTS*)
001460      600 FORMAT(1H0,*LIFE CYCLE COSTS*)
001460      610 FORMAT(1H0,*DISCOUNTED LIFE CYCLE COSTS*)
 01460          END
```

APPENDIX C3

"ENERGY AND MATERIALS - CURRENT MODEL AUTOMOBILES"

ENERGY AND MATERIALS - CURRENT MODEL AUTOMOBILES

Materials Composition

Excellent agreement has been obtained among the several recent studies which describe the materials composition of modern automobiles. [1-5] Percentage compositions of ferrous metals, aluminum alloys, copper and copper alloys, zinc, glass, rubber, and plastics are changing slowly due to the gradual substitution of lighter materials. In any given year, however, the mass fraction of each particular material appears to be reasonably constant over a range of car weights.

Table I shows the estimated weight breakdown for automobiles as estimated by a 1975 study. [2] The same table gives the author's estimate for 1979 model cars, in the form of a rounded-off interpolation. * These estimated 1979 values will be carried forward to the manufacturing energy estimates.

Energy to Manufacture Automobiles

The investigators Hirst and Herendeen have estimated that it requires 123 million Btu to manufacture a typical American automobile. [6] This figure is similar to a value of 126 million Btu cited by Berry and Fels. [7] McGowan and Kirchoff, by contrast, calculated the manufacturing energy per car to be only 34 million Btu. [8]

* The author of this section was also a principal contributor to the materials accounting in Reference (2).

Table I - Weight Percentage Materials Composition of Automobiles

(Based on Estimates from Reference 2 for 1975, 1980, and 1990 and an updated estimate by the author for 1979)

Material	Est. for 1975	Projections for 1980	Projections for 1990	Author's Est. for 1979
Low carbon and alloy steel	61.2	56.9	54.2	60.0
Cast and malleable iron	16.2	13.6	7.9	14.0
Aluminum alloys	2.9	6.3	11.9	4.5
Copper and copper alloys	1.0	1.0	0.6	1.0
Zinc	0.8	0.4	0.3	0.6
Lead	0.7	0.8	0.7	0.8
Other metals, incl. magnesium	0.3	0.7	1.4	0.5
Rubber	4.6	5.1	5.0	5.0
Glass	2.4	2.6	2.8	2.6
Plastic	3.5	6.7	9.2	5.0
Other non-metal	6.5	5.9	6.0	6.0
Totals	100.1	100.0	100.0	100.0

Energy requirements to produce basic materials and components has not been a subject of close agreement. References differ, of course on the basis for the estimates; some include only the energy for smelting or processing, while others include the activities of mining, ore transportation, rolling and component fabrication. One must also distinguish between electrical energy and powerplant fuel consumed.

Table II identifies manufacturing energy estimates from several sources, and also sets forth the figures which will be assumed for this present task. These last figures represent our best present estimates of total energy typical for components made of each material, from mine or petroleum feed stock to finished parts. Actual total energies can vary widely with the characteristics of the ore, transportation, method of fabrication, and percentages of scrap vs. virgin materials used.

A final step is to do a trial accounting of the total energy to produce a complete automobile. We have taken as a 1979 baseline a U.S.-produced automobile of 3,620 lb. curb weight, such as the Ford LTD 4-door sedan. This is a six-passenger vehicle with a 302 CID V-8 engine and a wheelbase of 114.4 inches. The results of the energy accounting are given in Table III. A subtotal of 122.6 million Btu is the estimated energy to produce the parts from which the vehicle is assembled. To this must be added the energy to transport the components to the assembly plant, and then the energy to assemble and paint the vehicle. If subassemblies and parts equal to the car's total mass were transported an average of 100 miles, the fuel energy for truck transportation would be about 430,000 Btu. This is based on a referenced figure of 0.0176 gallon of diesel fuel per ton-mile of freight hauled. (15)

A rough estimate of energy expended at the assembly plant can be based on an assumption that about 10 kW might be expended over a ten hour period per car. This is for conveying and hoisting, welding, power tools, paint drying,

Table II - Estimates of Manufacturing and Processing Energy for Materials and Components Used in Automobile Production

Material or Component	Quoted Energy, Btu /lb	Quoted from Reference	Value Used, This Study, Btu/lb
Alloy Steel	22,300	(9)	
Stainless Steel	34,000	(9)	
Steel (Material Processing)	21,500	(3)	
Iron (Material Processing)	15,500	(3)	
Steel (Material Processing)	13,250	(10)	
Steel Auto Hood (Mine to formed part)	28,000	(11)	
Aluminum Hood (45% virgin mat'l)	108,300	(11)	
Aluminum - Primary (Mat'l Processing)	110,000	(3)	
Aluminum - from Scrap (Mat'l. Processing)	10,000	(3)	
Aluminum smelting (Present processes)	22,180	(12)	
Aluminum smelting (New Alcoa process)	15,350	(12)	
Alum (Total energy of metal, from 50% bauxite)	140,900	(13)	
Copper (Total energy metal, from 1.5% ore)	26,780	(13)	
Copper (Total energy metal, from 0.6% ore)	49,540	(13)	
Copper and Alloys	65,700	(9)	
Zinc Castings	45,500	(9)	45,500
Lead	14,700	(14)	15,000
Plastics	25,000	(9)	
Plastics (Incl. feed stock)	78,500	(10)	78,500
Fiber Glass-Reinforced Plastic Hood	40,100	(11)	
Fuel Value, Resin Raw Mtl.	20,000	(11)	
Rubber	37,000	(3)	37,000
Glass	13,000	(3)	13,000

(Table II continued on next page)

Table II - Continued

Material or Component	Quoted Energy, Btu /lb	Quoted from Reference	Value Used, This Study, Btu /lb
Other Materials	37,000	(3)	37,000
Stamped Steel Parts	- -	- -	28,000
Cast Iron Parts, Incl. Machining	- -	- -	20,000
Formed Aluminum Parts (45% Virgin)	- -	- -	108,000
Finished Copper and Cu Alloy Parts	- -	- -	50,000

Table III - Estimate of Manufacturing Energy for an Automobile of 3,620 lb Curb Weight (1979 Model Year 4-Door Sedan)

Material, Component, or Process	Mass Fraction,%	Mass, lb	Specific Energy, Btu/lb	Total Energy, Thous. Btu
Steel Components	60.0	2,172	28,000	60,816
Cast and Malleable Iron Parts	14.0	507	20,000	10,140
Aluminum Alloy Parts	4.5	163	108,000	17,604
Copper, Cu Alloy Components	1.0	36	50,000	1,800
Zinc Castings	0.6	22	45,500	1,001
Lead	0.8	29	15,000	435
Rubber	5.0	181	37,000	6,697
Glass	2.6	94	13,000	1,222
Plastic	5.0	181	78,500	14,209
Other Materials and Parts	6.5	235	37,000	8,695
Subtotals	100.0	3,620		122,619
Transportation, Parts and Subassemblies				430
Assembly Plant Energy				1,140
Est. Total Manufacturing Energy				124,189

(Or Approximately 124 million Btu per Car)

and general utility supply to the plant. The electrical energy required is about 100 kWh or 341,200 Btu this is raised to 1.14 million Btu fuel energy input if the conversion of fuel to delivered electricity is 30% efficient.

Our estimate of total manufacturing energy per car is 124 million Btu. It is interesting how close this independent estimate is to the 123 million Btu calculated by Hirst and Herendeen. (6)

The energy to produce batteries is of interest from the point of view of manufacturers and owners of electric or hybrid vehicles. From estimates given by Williams in Ref. (14), we calculate that the energy to manufacture an advanced lead-acid battery will be about 15,700 Btu per lb of battery weight. Williams has identified such a battery as having a specific energy of 18 Wh/lb. It should be noted that since 15,700 Btu is the equivalent of the 4,600 Wh of energy to manufacture a pound of battery, the battery would have to undergo the equivalent of over 250 complete discharges before the cumulative stored energy would exceed the original manufacturing energy. In other words, the manufacturing energy is very significant in relationship with the total energy the battery will store over its lifetime.

THE SCRAPPING AND RECYCLING OF AUTOMOBILES: MATERIALS AND ENERGY IMPLICATIONS

Materials Recovery

The materials composition of present and possible future automobiles was given in Table I, and is discussed in detail by References (2) and (5). Approximately ten years after the date of manufacture, cars of these compositions will appear in large numbers in the junkyards.

Ford Motor Co. investigators have stated that the motor vehicle registrations are terminated on about 9 million cars/yr at this time, and that about 90% of these are now being recycled for their metal content - primarily the ferrous metals. (5) These authors further estimate that of the available automotive scrap (in 1974), 85% of the ferrous metal was recovered. Similarly, the recycling ratios for copper, aluminum, and zinc were 62%, 53%, and 27% respectively. It may be inferred that with currently improving techniques for the separation of shredded scrap, the recycling ratios for aluminum and copper will improve. Zinc, since much of it is in the form of galvanized panels and trim, will continue to be difficult to recover.

Not much in the way of plastics is now being recycled, although in the future some economical methods of doing this may be developed. At least two alternatives are to somehow reconstitute the scrap by chemical means, or else to use the scrap plastic as fuel. The average heating value of such material is probably in the range 15,000 - 20,000 Btu /lb. A present objection to burning many plastics is the toxic nature of the combustion products.

The lead from storage batteries is eminently recyclable, and each automobile uses about three or four batteries during its lifetime. Most of the replacement batteries are salvaged in the trade-in process, as are those finally ending up in wrecking yards.

Steps in Resource Recovery

Usually the steps involved in recycling automobiles are:

1. The vehicle is transported to a local wrecking yard (dismantler).
2. A dismantler salvages parts worth reselling, which is a larger fraction in the case of late-model wrecks than for worn-out obsolete cars. In the latter instance, the tires, battery, radiator, and other easy-to-remove parts with a high scrap value are removed. Sometimes the engine and drive train are also removed at this point. The bulk is then flattened or compacted for efficient transport.
3. The bulk is shipped to a processing center, where it is either baled or shredded. Shredding is becoming the preferred technique since it results in a higher grade of ferrous scrap and allows segregation of the other materials. Many shredding plants can take engine blocks and all.
4. Recovered materials are shipped to smelters or foundries. Not all of the material finds its way back to Detroit; much of the ferrous scrap (for example) goes to regional steel mills to be turned into reinforcing bar and structural shapes.

Energy Consumption in Resource Recovery

Transportation- The average number of ton-miles of transportation is not known to us, but one scenario might be the following:

- The entire car, 3620 lb is shipped 20 miles to dismantler.
- After removing 300 lb of material, the remaining 3320 lb is forwarded to shredder, 100 miles away.
- Non-metallics and some lost metal are landfilled near the shedder; assume 2,700 lb metal to be reclaimed is shipped 500 miles further to regional smelters.

- If most of the ferrous material goes to regional steel mills, this might still leave about 1000 lb. smelted metal to be sent another 1000 miles to new users including the auto industry.

The above shipments total 1377 ton-miles. Again using a payload-specific fuel consumption of 0.0176 gal diesel fuel/ton-mile, [15] the aggregate transportation fuel energy would be 3.27 million Btu per recycled automobile. Other assumptions or conditions could alter this outcome appreciably.

Dismantler's Activities - Since dismantling is a labor- intensive activity, not much fuel energy is expended during this part of the process. Hoisting, flame-cutting, in-yard movements, and flattening of the hulk may consume 4 kWh per car at 20% efficiency, or a gross expenditure of 68,240 Btu per car. If 3,620 lb scrap is handled, the specific energy would be 19 Btu /lb.

Shredder - Based on conversations with the operators of shredding plants, one automobile can be shredded in 15 seconds to one minute even with engine block and drive train still in the vehicle. This is a very energy-intense operation, since around 4000 hp is used to drive a hammer mill. Another 2000 hp or so is dedicated to segregation of the resulting scrap particles, and this process is expected to keep pace with the shredding. Our very provisional estimate, based on an assumed 20 seconds for a "car" to pass through each process and then adding 20% more energy for plant idling and overhead consumption, is 339,000 Btu per hulk.

Total Energy for Resource Recovery - The above energy elements are summed up in Table IV. The total energy for scrapping a 3620-lb passenger car and recovering an appreciable fraction of its resources is roughly estimated as 3.7 million Btu. This does not include smelting or process energy to be charged against the next use.

Table IV - Provisional Estimate of Energy Required to Recover Resources from a Junked Automobile

Basis: Original curb weight 3620 lb, and assumptions given in text. These assumed conditions are subject to wide variations.

Activity	Energy for Activity Thous. Btu
Shipping, aggregate of 1408 ton-miles	3,270
Dismantling and Flattening	68
Shredding and Sorting	339
Total Energy Required	3,677

(Approximately 3.7 million Btu. Does not include smelting or process energy for the next use.)

Approximate Mass Accountability:

Removed by dismantler for materials recycling - - -	200 lb *
Removed by dismantler for parts resale - - - - - -	100
Metal salvaged by shredder - - - - - - - - - - - -	2,700
Lost metal and non-metal to landfill - - - - - -	620 **
Original Curb Weight - - - - - - - -	3,620 lb

* Includes some eventual loss such as battery case materials.

** Includes 5% loss of iron and steel, 25% loss of aluminum, and 12 lb loss of zinc.

The largest energy element by far in this total is transportation fuel. Even if this transportation component were assumed to be much less (perhaps through the economies of rail shipment, rather than by truck), it would still dominate the recycling energy requirement.

A recycling energy of almost 4 million Btu per car is to be compared with 124 million Btu to manufacture that car. While the 124 million Btu already includes the energy benefit of some scrap metal recycling, further study could reveal something of the sensitivity to ratio of recycled to virgin materials.

REFERENCES

1. K.C. Dean and J.W. Sterner, "Dismantling a Typical Junk Automobile to Produce Quality Scrap," RI 7350, U.S. Department of Interior, Bureau of Mines, Washington, D.C. Dec. 1969.

2. R.W. Roig, et.al., "Impacts of Material Substitution in Automobile Manufacture on Resource Recovery," International Research and Technology Corp., Report IRT-403-R, for U.S. EPA, Jan. 16, 1976.

3. "The Report by the Federal Task Force on Motor Vehicle Goals Beyond 1980," Vol. 2, Study coordinated by U.S. DOT, Draft Sept. 2, 1976.

4. Wards Automotive Yearbook, 1978 Ed.

5. L.R. Mahoney, J. Braslaw, and J.J. Harwood (Ford Motor Co.), "Effects of Changing Automobile Materials on the Junk car of the Future," SAE Paper 790299, Feb. 26-Mar. 2, 1979.

6. E. Hirst (Oak Ridge Nat. Lab.) and R. Herendeen (Univ. of Illinois), "Total Energy Demand for Automobiles," SAE Paper 730065, Jan. 1973.

7. R.S. Berry and M.F. Fels, "The Production and Consumption of Automobiles," Chemistry Dept., Univ. of Chicago, July 1972.

8. Jon G. McGowan and R.H. Kirchoff (Univ. of Massachusetts), "How Much Energy is Needed to Produce an Automobile?" Automotive Engineering, July 1972.

9. R.F. Sperring (PPG Industries), "Glass Materials: 1974-1980," SAE Paper 750344, Feb. 1975.

10. A Time to Choose, America's Energy Future, Energy Policy Project of the Ford Foundation, Ballinger Pub. Co., 1974.

11. E.D. Trueman (Owens-Corning Fiberglas Corp.), "Weight Saving Approaches Through the Use of Fiber Glass-Reinforced Plastic," SAE Paper 750155, Feb. 1975.

12. Jame A. McGowan (Alum. Co. of America), "The Outlook for Aluminum in Automobiles," SAE Paper 750180, Feb. 1975.

13. W.S. Lyman (Copper Devel. Assoc., Inc.), "Copper - An Available Resource for the Future," SAE Paper 750181, Feb. 1975.

14. K.R. Williams (Shell International Petroleum Co., Ltd.), "Energy Analysis and the Electric Car," SAE Paper 760120, Feb. 1976.

15. "Interagency Study of Post-1980 Goals for Commercial Motor Vehicles," (Draft), U.S. DOT, June, 1976.

16. R. S. Berry and M. F. Fels, "The Energy Cost of Automobiles," Science and Public Affairs, December, 1973.