N O T I C E

THIS DOCUMENT HAS BEEN REPRODUCED FROM MICROFICHE. ALTHOUGH IT IS RECOGNIZED THAT CERTAIN PORTIONS ARE ILLEGIBLE, IT IS BEING RELEASED IN THE INTEREST OF MAKING AVAILABLE AS MUCH INFORMATION AS POSSIBLE

NASA Technical Memorandum 81544

NUMERICAL CALCULATION OF TRANSONIC AXIAL TURBOMACHINERY FLOWS

Djordje S. Dulikravich
Lewis Research Center
Cleveland, Ohio

(NASA-TM-81544) NUMERICAL CALCULATION OF TRANSONIC AXIAL TURBOMACHINERY FLOWS (NASA) 10 p HC A02/MF A01 CSCL 21E
N80-27363
Unclas
G3/07 27991

Prepared for the
Seventh International Conference on
Numerical Methods in Fluid Dynamics
cosponsored by AFOSR, NASA, NSF, and ONR
Stanford University, Stanford, California and
NASA Ames Research Center, Moffett Field, California
June 23-27, 1980

JUL 1980
RECEIVED
NASA STI FACILITY
ACCESS DEPT.

NASA

NUMERICAL CALCULATION OF TRANSONIC AXIAL TURBOMACHINERY FLOWS

Djordje S. Dulikravich*

National Aeronautics and Space Administration
Lewis Research Center
Cleveland, Ohio 44135

SUMMARY

This paper presents a numerical method and the results of a computer program for solving an exact, three-dimensional, full-potential equation that models rotating and nonrotating inviscid, absolutely irrotational, homentropic flows. Besides calculating the flows through an arbitrarily shaped rotor or stator blade row mounted on an axisymmetric hub and confined in an axisymmetric duct, the computer program is also capable of analysing flow fields about arbitrarily shaped wing-body combinations, propellers, helicopter rotors in hover, and wind turbine rotors. The governing equation is solved numerically in a fully conservative form by using an artificial time concept, a finite volume technique, rotated type-dependent differencing, successive line overrelaxation, and sequential boundary-conforming grid refinement. An artificial viscosity is added in fully conservative form; and an initial guess for the potential field is applied, as determined by a two-dimensional cascade analysis.

INTRODUCTION

This work is based on the principles used in external transonic aerodynamics (Jameson, 1974; Caughey and Jameson, 1977) and represents an extension of the author's doctoral research in the field of potential, transonic turbomachinery flows (Dulikravich, 1979).

In axial turbomachinery the pressure ratio across a stage can be substantially increased by operating in the transonic speed regime. Analyses of these possibly shocked flows should account for their full nonlinearity (Rae, 1976). The simplest mathematical model that describes such flows exactly is the so-called full-potential equation. This equation can be obtained for rotating or stationary turbomachinery geometries from the following analysis.

ANALYSIS

The relative coordinate system (x,y,z) is attached for a rotor (fig. 1) which rotates at the constant angular speed $|\vec{\Omega}|$ about the x axis. The free stream advances along the same axis at the constant speed $U_{-\infty}$. Let

$$\vec{V}_r = u_r\hat{e}_x + v_r\hat{e}_y + w_r\hat{e}_z = q_r\hat{e}_s \tag{1}$$

be the relative velocity vector of the fluid with respect to the blade, and let the absolute velocity vector be defined as

$$\vec{V} = \vec{V}_r + (\vec{\Omega} \times \vec{r}) \tag{2}$$

Then the sum of the inertia, centripetal, Coriolis, and pressure forces can be expressed in the form (Wu 1952)

$$\vec{V}_r \times (\vec{\nabla} \times \vec{V}) = \vec{\nabla} I - T\vec{\nabla} S \tag{3}$$

Here T is the absolute static temperature, S is the entropy, and rothalpy is defined as

$$I = h + \left(\vec{V}_r \cdot \vec{V}_r - \Omega^2 r^2\right)/2 = H - (\vec{\Omega} \times \vec{r}) \cdot \vec{V} \tag{4}$$

where h is the static enthalpy and H is the total enthalpy.

The entire flow field can be described with a single potential function $\varphi(x,y,z)$ defined as

$$\vec{V} = \vec{\nabla}\varphi \tag{5}$$

if the condition of irrotationality of the absolute velocity vector is satisfied. This requires that $\vec{\nabla} I = 0$ and $\vec{\nabla} S = 0$ simultaneously everywhere, or that $\vec{\nabla} I = \vec{\nabla} S$. Consequently there should be no heat transfer between the fluid and solid surfaces, the flow should not separate, and all possible shock waves should be weak. As already shown (Caradonna and Isom, 1972; Dulikravich, 1979), the continuity equation

$$\vec{\nabla} \cdot (\rho \vec{V}_r) = 0 \tag{6}$$

can be written in its full-potential vector operator form

$$a^2 \nabla^2 \varphi - (\vec{\nabla}\varphi \cdot \vec{\nabla})(\vec{\nabla}\varphi \cdot \vec{\nabla}\varphi)/2 + 2(\vec{\nabla}\varphi \cdot \vec{\nabla})((\vec{\Omega} \times \vec{r}) \cdot \vec{\nabla}\varphi)$$
$$- ((\vec{\Omega} \times \vec{r}) \cdot \vec{\nabla})((\vec{\Omega} \times \vec{r}) \cdot \vec{\nabla}\varphi) = 0 \tag{7}$$

where a is the local speed of sound. The canonical form (Dulikravich and Caughey, 1980) of equation (7) is

$$a^2 \nabla^2 \varphi - q_r^2 \varphi_{,ss} = 0 \tag{8}$$

where s is the relative streamline direction (fig. 1). One can consider this second-order, quasi-linear, partial differential equation to be the steady-state limit of the more general (Garabedian, 1956; Jameson, 1974; Dulikravich, 1979) artificial, time-dependent equation expressed in a form suitable for the type-dependent, finite difference discretization

$$\left(a^2 - q_r^2\right)\left(\varphi^H_{,ss} - \varphi^E_{,ss}\right) + \left(a^2 \nabla^2 \varphi^E - q_r^2 \varphi^E_{,ss}\right) + (2\alpha_1 \varphi_{,st} + 2\alpha_2 \varphi_{,mt} + 2\alpha_3 \varphi_{,nt} + \epsilon \varphi_{,t} = 0 \tag{9}$$

Here the superscript H designates upstream differencing (used only in the regions of locally supersonic relative flow for the purpose of numerically approximating the proper domain of dependence), and the superscript E designates central differencing; t is the artificial time; and the (n,m) plane is locally orthogonal to the relative streamline direction (s coordinate). Equation (9) is iteratively solved by using a successive line overrelaxation technique where the iterative sweeps through the flow field are considered as successive intervals in the artificial time direction. The mixed space-time derivatives are obtained by using a fi-

nite difference mixture of old, temporary, and new values of φ obtained in the iterative sweeping process (Jameson, 1976; Dulikravich, 1979).

In order of obtain a finite difference evaluation of the derivatives, the flow field geometry, the governing equations, and the boundary conditions are transformed from the physical space (fig. 1) into a parallelepiped-shaped computational space (fig. 2). The periodic flow domain about a single arbitrarily shaped blade mounted on an axisymmetric hub and confined in an axisymmetric duct is discretized by a number of intermediate axisymmetric surfaces (Dulikravich, 1980a). Every two-dimensional periodic surface with the blade intersection contour in the middle is then transformed (fig. 3) into a rectangular plane by using conformal mapping (Dulikravich, 1979), elliptic polar coordinates, and coordinate stretchings and shearings. The uniform grid in the (X,Y) computational plane thus remaps back into a periodic body-conforming, quasi-orthogonal grid in the physical space (fig. 4). Each distorted, three-dimensional grid cell is mapped into a unit cube by using trilinear, isoparametric local mapping functions (Jameson and Caughey, 1977) of the form

$$b = \frac{1}{8}\sum_{p=1}^{8} b_p(1 + \bar{X}\bar{X}_p)(1 + \bar{Y}\bar{Y}_p)(1 + \bar{Z}\bar{Z}_p) \tag{10}$$

where the subscript p refers to the value at the cube's corner; that is,

$$\bar{X}_p = \pm 1 \qquad \bar{Y}_p = \pm 1 \qquad \bar{Z}_p = \pm 1 \tag{11}$$

and b stands for any of the following: x, y, z, or φ.

In order to use the finite volume technique as defined by Caughey and Jameson (1977), equation (8) has to be expressed in terms of the computational (X,Y,Z) coordinates (fig. 2). If the geometric transformation is defined as $[J] = \partial(x,y,z)/\partial(X,Y,Z)$ and D is a determinant of $[J]$, the modified contravariant components of the relative velocity vector are

$$[U_r V_r W_r]^T = D[J]^{-1}[u_r v_r w_r]^T \tag{12}$$

If $[B] = [J]^{-1}[J^T]^{-1}$, the steady part of equation (9) can be written in the following matrix form:

$$\left(\left(a^2 - q_r^2\right)\Big/(Dq_r)\right)[U_r V_r W_r][\nabla_{XYZ}\varphi_{,s}]^T + a^2\Big([\nabla_{XYZ}][B][\nabla_{XYZ}\varphi]^T - (1/Dq_r)[U_r V_r W_r][\nabla_{XYZ}\varphi_{,s}]^T\Big) = 0 \tag{13}$$

where

$$[U_r V_r W_r] = D[J]^{-1}[0 \;\; \Omega z \;\; -\Omega y]^T + D[B][\nabla_{XYZ}\varphi]^T \tag{14}$$

and

$$\varphi_{,s} = (1/Dq_r)[U_r V_r W_r][\nabla_{XYZ}\varphi] \tag{15}$$

Equation (6), which is actually equation (8) multiplied by ρ/a^2, transforms into

$$\left(\rho U_r\right)_{,X} + \left(\rho V_r\right)_{,Y} + \left(\rho W_r\right)_{,Z} = 0 \tag{16}$$

The boundary conditions in the computational space are the following: On the hub surface $W_r = 0$, on the blade surface $V_r = 0$, and on the duct surface

$$W_r = |\vec{\Omega}|((z_{,X}x_{,Y} - x_{,X}z_{,Y})z - (x_{,X}y_{,Y} - y_{,X}x_{,Y})y) \tag{17}$$

The periodic boundary condition applied on the surfaces A'A"B'B" (fig. 1) is $\Phi(X + b,0,Z) = \Phi(X - b,0,Z)$, where $b \leq \pi$. If the absolute enthalpy of the fluid at upstream infinity is constant, it follows from equation (4) that the most general flow kinematics at upstream infinity can be expressed as $\vec{V}_{-\infty} = U_{-\infty}\,\hat{a}_x + (C_\theta/r)\,\hat{a}_\theta$. The blade trailing edge is enforced to be a stagnation line. The finite discontinuity in the velocity potential at the trailing edge is equal to the circulation $\Gamma(r)$ of the velocity field. This discontinuity (i.e., no jump in static pressure) is enforced at every point of an arbitrarily shaped vortex sheet (surface D'E'D"E" in fig. 2) after each iterative sweep through the flow field.

RESULTS

A computer program has been developed on the basis of a previous analysis (Dulikravich, 1980e). This program uses a potential field generated by a two-dimensional cascade analysis as an initial guess for the three-dimensional potential field calculations (Dulikravich, 1980c). The iterative convergence rate is accelerated by using a three-level consecutive, grid refinement sequence.

The program was tested for two speed regimes. The first test case was a subsonic free rotor of a propeller-type, 100-kW wind turbine, the NASA Mod-0 type (Dulikravich, 1980b and 1980d). Numerical results showing chordwise distribution of the relative Mach number at the tip section are presented in figure 5. Because of the lack of available published results for three-dimensional, transonic rotor calculations, we decided to test an atypical ducted rotor having eight nontwisted, nontapered blades mounted on a doubly infinite cylindrical hub with a hub-tip radius ratio r_h/r_t of 0.85. The blades were composed of NACA 0012 airfoil sections and had a constant twist (or setting) angle of 4° and a relative chord length r_t of 0.1. Numerical results obtained at a tip section for $|\vec{\Omega}| = 120$ rpm, $(M_x)_{-\infty} = 0.7458$, $(p_t)_{-\infty} = 16\ N/cm^2$, and $(T_t)_{-\infty} = 325$ K are shown in figure 6. Insufficient sharpness of the isentropic shock developing on the suction surface is due to the relatively coarse grid used and the low number of iteration cycles.

CONCLUSIONS

A general computer program has been developed for fast and accurate, fully conservative finite volume calculations of the full-potential equation for transonic, steady, three-dimensional, potential rotating and nonrotating flows. As a part of the program, three-level, refined, boundary-conforming grids are generated for arbitrarily shaped cascades of blades mounted on an axisymmetric hub and confined in an axisymmetric duct. The program uses results of the two-dimensional cascade flow calculations as an initial guess for the three-dimensional iterative procedure.

Artificial viscosity was added in conservative form, and this assures the correct strength and position of the captured isentropic shocks.

*National Research Council - National Aeronautics and Space Administration Research Associate.

REFERENCES

Caradonna, F. & Isom, M. 1972 Subsonic and Transonic Potential Flow over Helicopter Rotor Blades, AIAA Journal, 10, 1606.

Caughey, D. A. & Jameson, A. 1977 Numerical Calculation of Transonic Potential Flow About Wing-Fuselage Combinations. AIAA Paper 77-677.

Dulikravich, D. S. 1979 Numerical Calculation of Inviscid Transonic Flow Through Rotors and Fans. Ph.D. Thesis, Cornell University.

Dulikravich, D. S. 1980a Fast Generation of Body Conforming Grids for 3-D Axial Turbomachinery. To be presented at the Workshop on Numerical Grid Generation Techniques for Partial Differential Equations, NASA Langley, Hampton, Va., October 6-7.

Dulikravich, D. S. 1980b Numerical Calculation of Steady Inviscid Full Potential Compressible Flow About Wind Turbine Blades. AIAA Paper 80-0607. (Also published as NASA TM-81438.)

Dulikravich, D. S. 1980c CAS2D - FORTRAN Program for Nonrotating, Blade-to-Blade, Steady, Potential Transonic Cascade Flows. NASA TP-1705, 1980.

Dulikravich, D. S. 1980d WIND - Computer Program for Three-Dimensional, Potential, Compressible Flow About the Propeller Type Wind Turbine Blades. Submitted for publication as NASA Technical Publication.

Dulikravich, D. S. 1980e CAS3D - FORTRAN Program for Three-Dimensional, Steady, Transonic, Potential, Axial Turbomachinery Flows. Submitted for publication as NASA Technical Publication.

Dulikravich, D. S. & Caughey, D. A. 1980 Finite Volume Calculation of Transonic Potential Flow Through Rotors and Fans. Cornell University, Ithaca, NY, Rep. no. FDA-80-03.

Garabedian, P. R. 1956 Estimation of the Relaxation Factor for Small Mesh Sizes. Math Tables Aids to Comput., 10, 183.

Jameson, A. 1974 Commun. Pure Appl. Math. 27, 283.

Jameson, A. 1976 Transonic Flow Calculations. Lectures Presented at Von Karman Institute.

Jameson, A. & Caughey, D. 1977 A Finite Volume Scheme for Transonic Potential Flow Calculations. AIAA Paper 77-635.

Rae, W. J. 1976 Nonlinear Small-Disturbance Equations for Three-Dimensional Transonic Flow Through a Compressor Blade Row. Calspan Corp., Buffalo, NY, Rep. no. CALSPAN-AB-5487-A-1. (AFOSR-76-1082TR, AD-A031234.)

Wu, C.-H. 1952 A General Theory of Three-Dimensional Flow in Subsonic and Supersonic Turbomachines of Axial-, Radial-, and Mixed-Flow Types. NACA TN 2604.

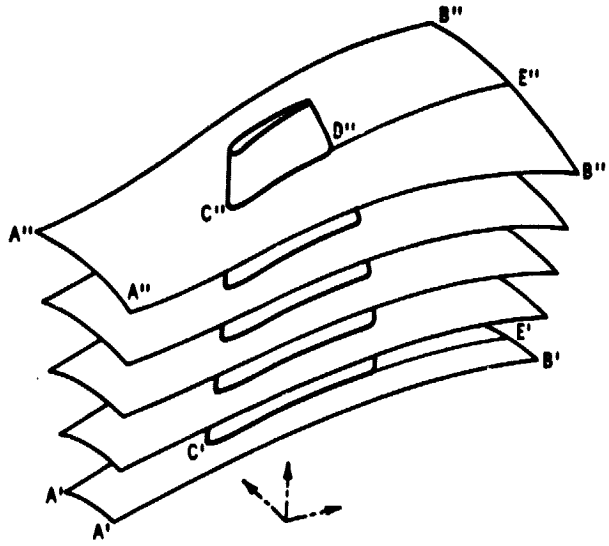

Figure 1. - Physical space.

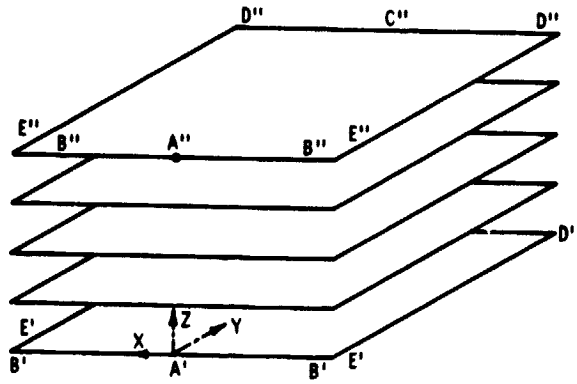

Figure 2. - Computational space.

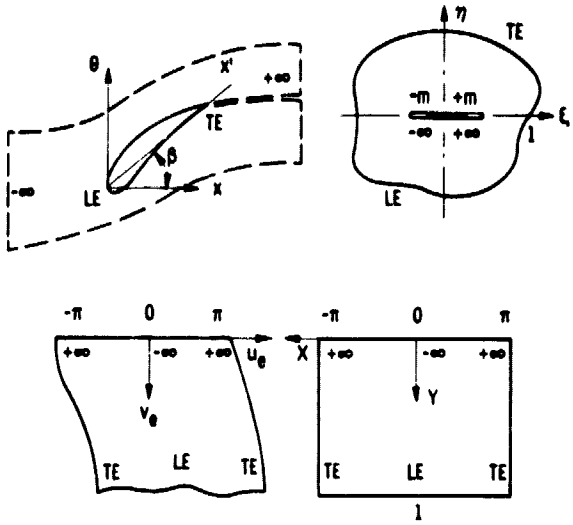

Figure 3. - Geometric transformation sequence, where TE denotes trailing edge and LE denotes leading edge.

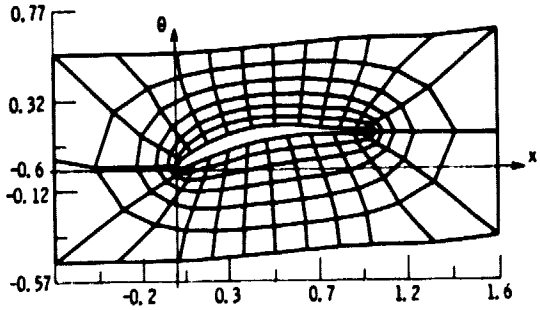

Figure 4. - Computational mesh in physical space (x, y, z).

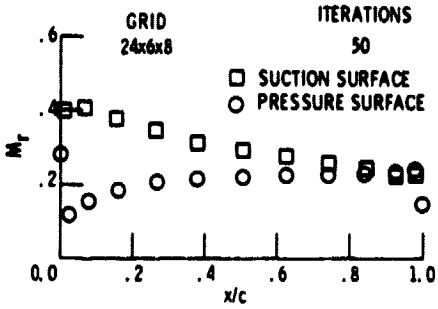

Figure 5. - Subsonic rotor.

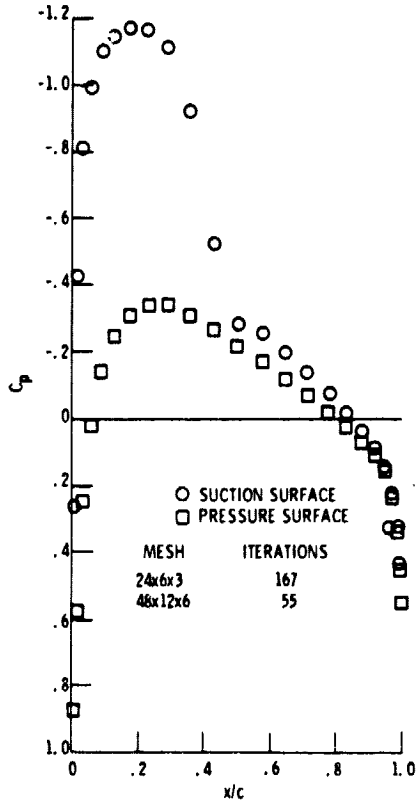

Figure 6. - Transonic rotor.