N O T I C E

THIS DOCUMENT HAS BEEN REPRODUCED FROM MICROFICHE. ALTHOUGH IT IS RECOGNIZED THAT CERTAIN PORTIONS ARE ILLEGIBLE, IT IS BEING RELEASED IN THE INTEREST OF MAKING AVAILABLE AS MUCH INFORMATION AS POSSIBLE

JPL NO. 9950379

(NASA-CR-163392) SOLAR/HYDROGEN SYSTEMS ASSESSMENT. VOLUME 1: SOLAR/HYDROGEN SYSTEMS FOR THE 1985 - 2000 TIME FRAME Final Report (Jet Propulsion Lab.) 149 p HC A07/MF A01 CSCL 10B G3/44

N80-28865

Unclas 28290

SOLAR/HYDROGEN SYSTEMS ASSESSMENT

Volume I Solar/Hydrogen Systems for the 1985-2000 Time Frame

FINAL REPORT

THE CALIFORNIA INSTITUTE OF TECHNOLOGY

JET PROPULSION LABORATORY

RECEIVED

JUL 11 1980

Patents and TU Office

CONTRACT NO. 955492

PREPARED BY

ESCHER:FOSTER TECHNOLOGY ASSOCIATES, INC.

2 JUNE 1980

EFFORT CONDUCTED UNDER NASA CONTRACT NAS7-100

FOR THE U.S. DEPARTMENT OF ENERGY

AUG 1980

RECEIVED

NASA STI FACILITY

ACCESS DEPT.

SOLAR/HYDROGEN SYSTEMS FOR THE 1985-2000 TIME FRAME

Volume I

SOLAR/HYDROGEN SYSTEMS ASSESSMENT

Final Report

The California Institute of Technology
Jet Propulsion Laboratory
Contract No. 955492

By

R.W. Foster, R.R. Tison, W.J.D. Escher
Escher:Foster Technology Associates, Inc.

and

J.A. Hanson
Jet Propulsion Laboratory

1 June 1980

Prepared by

Escher:Foster Technology Associates, Inc.
St. Johns, Michigan 48879

This work was performed for the Jet Propulsion Laboratory, California Institute of Technology sponsored by the National Aeronautics and Space Administration under Contract NAS7-100.

QUALITY

ABSTRACT

The findings of a study of opportunities for commercialization of systems capable of producing hydrogen from solar energy are presented in two volumes. A compendium of monographs by specialists in the fields of solar energy conversion technologies, hydrogen production technologies and related technology descriptions from the general literature comprise Volume II. This data base was used to support an evaluation and selection process that identified four candidate solar/hydrogen systems best suited to commercialization within the next two decades.

This Volume I first reviews the background of the work and the methods used. Then an evaluation of the hydrogen product costs that might be achieved by the four selected candidate systems is compared with the pricing structure and practices of the commodity gas market. Subsequently, product cost and market price match is noted to exist in the "small user" sector of the hydrogen marketplace. Barriers to and historical time lags in, commercialization of new technologies are then reviewed. Finally, recommendations for development and demonstration programs designed to accelerate the commercialization of the candidate systems are presented.

(130 pages, 53 Figures, 15 Tables)

ACKNOWLEDGMENTS

General Acknowledgments

The information presented in this Solar/Hydrogen Systems Assessment was contributed by a number of authorities in the various solar, hydrogen, and related technologies. The authors wish to acknowledge these contributors by listing them below, along with the subject matter (and report section) in which these individuals have contributed to the information presented. Also, supporting information was freely derived from the solar- and hydrogen-energy technical literature, as well as elsewhere. These contributions are acknowledged as cited in the references listed at the end of each major section.

We wish to express our gratitude to Mr. Ray Hagler of JPL, who provided a thorough review and critique of draft versions of this report. Mr. Hagler also contributed information in the technical area of pressurized gaseous storage.

Dr. R.L. Chapman, as a member of the JPL-selected Solar/Hydrogen Systems Assessment "core team," along with Mr. Hanson and two of the present authors (Escher and Foster), contributed to the early phases of the work, and expressly to the development of the methodology used in the study.

The overall effort, both in-house at JPL and subsequently under contract to JPL by Escher:Foster Technology Associates, Inc. (E:F), was supported by the U.S. Department of Energy (DOE) through its Division of Energy Storage Systems (STOR). The study's financial support was provided through an interagency agreement between the DOE and the National Aeronautics and Space Administration via NASA's institutional contract with JPL (NAS7-100).

Finally, the authors wish to acknowledge and thank Ms. Paula S. Tison and Ms. Rhonda J. Reeve of E:F, who were responsible for all production aspects of this report.

QUALITY

Volume II Contributors

Contributor/Affiliation	Subject/Volume II Section
B. O. Stokes Caltech Jet Propulsion Laboratory	Biophotolysis (I-A-1)
A. Gupta Caltech Jet Propulsion Laboratory	Photocatalysis (I-A-2) Photoelectrocatalysis (I-A-3)
D. R. Burger and J. Biddle Caltech Jet Propulsion Laboratory	Photovoltaics (I-B-1)
S. Kuo Caltech Jet Propulsion Laboratory	Thermionics (I-B-3)
A. F. Latta (Deceased) Caltech Jet Propulsion Laboratory	Solar Thermal Engines (I-C-1)
C. England Caltech Jet Propulsion Laboratory	Solar Thermochemical Water Splitting (I-C-3)
R. P. Zimmer, C. G. Justus and G. R. Fletcher Georgia Institute of Technology	Wind Power (II-A-1)
A. Lavi and G. H. Lavi Energy Research and Development International, Inc.	Ocean Thermal Energy Conversion (II-A-2)
A. K. Stuart The Electrolyser Corporation Ltd.	Water Electrolysis (III)
R. L. LeRoy Noranda Research Centre	Water Electrolysis (III)
W. C. Kincaide Teledyne Energy Systems	Water Electrolysis (III)
L. J. Nuttall General Electric Co.	Water Electrolysis (III)
R. V. Carlson Los Alamos Scientific Laboratory	Cryogenic Liquid Hydrogen (IV-D-2)
C. E. Lundin (Deceased) Denver Research Institute	Metal Hydride Storage of Hydrogen (IV-D-3)
M. R. Tek University of Michigan	Underground Storage of Hydrogen (IV-D-4)
C. L. Hamilton and H. E. Marsh, Jr. Caltech Jet Propulsion Laboratory	Chemical Compound Storage of Hydrogen (IV-D-5)
D. D. Lawson Caltech Jet Propulsion Laboratory	Organic Storage of Hydrogen (IV-D-6)

QUALITY

NEW TECHNOLOGY

No reportable items of new technology have been identified in the conduct of this contract effort. This statement is responsive to the requirement of Section 3.5.1.5, "New Technology," of JPL Specification 1030-26, Revision B.

Authors Note - "Technologies" and "Systems" - Use of the Terms

The authors have attempted to be consistent in using the words "technology" and "technologies" in the sense that "systems" are constructed using technologies. In many discussions, however, the text must interrelate these terms in many different contexts and clear seperation in useage is not always possible.

QUALITY

TABLE OF CONTENTS

Section	Topic	Page
	Abstract	i
	Acknowledgments	ii
	New Technology Statement	iv
	Table of Contents	v
I	Introduction	1
	A. Background	1
	B. Method Employed	1
	C. Structure of This Report	3
II	Approach to Solar/Hydrogen Technology Evaluation	4
	A. Guidelines, Constraints and Approach	4
	B. Commercialization Considerations	7
	C. Market Considerations	7
	D. Summary	9
III	Solar/Hydrogen Systems for the 1985-2000 Time Frame	11
	Introduction	11
	System Designs	11
	System Economics	11
	A. Photovoltaic/Water Electrolysis Production Systems	14
	B. Thermal-Heat Engine/Water Electrolysis Production Systems	16
	C. Wind Energy/Water Electrolysis Production Systems	19
	D. Small Hydropower/Water Electrolysis Production Systems	19
IV	The Hydrogen Market and Solar/Hydrogen Systems	23
	A. The Hydrogen Market	23
	B. Who Can Afford to Pay the Price?	23
	C. The Solar/Hydrogen Corner of the Market-Other Considerations	27
	D. Commercialization Issues	27

Section	Topic	Page
V	Conclusions and Recommendations	29
	A. Major Conclusions	29
	B. Recommendations	31
	Technical Papers and Presentations Deriving from this Assessment Project	32

APPENDICES

Appendix	Topic	Page
I	Background and Rationale for Solar/Hydrogen Systems	
	Solar Energy Systems	I-1
	Introduction	I-1
	Direct and Indirect Solar Energy Resources	I-1
	Delivered Forms of Solar Energy Systems	I-2
	Hydrogen Energy Systems	I-3
	Background and Orientation	I-4
	The Hydrogen Energy System Concept	I-4
	Indirect Uses of Hydrogen in Energy Applications	I-6
	Status of Hydrogen Energy Systems	I-8
	Hydrogen Chemical and Feedstock (Non-Energy) Applications	I-9
	Commodity Market Penetration Possibilities	I-9
	Rationale for Early Commercialization Candidates (By 2000)	I-10
	Summary: Background and Rationale	I-11
II	Solar/Hydrogen Technologies for the "Beyond 2000" Time Frame	
	General Discussion	II-1
	Direct Solar Energy Conversion Processes	II-1
	a. Photo-Electric Processes	II-1
	(1) Biophotolysis	II-1
	(2) Photocatalysis	II-3

Appendix	Topic	Page

	(3) Photoelectrolysis	II-3
	b. Electric Processes	II-3
	(1) Photovoltaic Systems	II-4
	(2) Thermoelectric Systems	II-4
	(3) Thermionic Processes	II-4
	c. Thermal Processes	II-5
	(1) Solar Thermal Engine Processes	II-5
	(2) Direct Thermal Water Splitting	II-5
	(3) Solar Thermochemical and Hybrid Electrolytic-Thermochemical Production of Hydrogen	II-5
	Indirect Solar Conversion Processes	II-6
	a. Mechanical Solar Conversion Technologies	II-6
	(1) Wind Energy Conversion Systems (WECS)	II-6
	(2) Ocean Thermal Energy Conversions (OTEC)	II-6
	(3) Ocean Wave Power	II-7
	(4) Hydropower	II-7
	b. Biological Conversion Technologies	II-7
III	Design Considerations and Costing Analyses - Selected Solar Hydrogen Systems	III-1
	General	III-1
	A. Technical Characterization of Selected Systems	III-1
	1. Review of Selected SECTS and HEPTS	III-1
	a. General	III-1
	b. Selected Solar Energy Conversion Technologies (SECTS)	III-2
	(1) Photovoltaic Conversion	III-2
	(2) Solar Thermal Heat Energy Conversion	III-2
	(3) Wind Energy Conversion	III-3
	(4) Small Hydropower	III-3
	c. Selected Hydrogen Energy Production Technology (HEPT)	III-4
	(1) Water Electrolysis	III-4

QUALITY

Appendix	Topic	Page

2. First Level System Descriptions III-4

a. General III-4

b. Photovoltaic/Electrolysis Production Systems III-5

c. Thermal Heat-Engine/Electrolysis Production Systems III-7

d. Wind Energy/Electrolysis Production Systems III-9

e. Small Hydropower/Electrolysis Production Systems III-10

3. Systems Engineering Considerations III-11

a. General III-11

b. Approach: A Review of Subsystems and Control Interfaces III-11

c. Water Electrolyzer Subsystems and Associated Control Interfaces III-12

(1) Special Contacts with Electrolyzer Manufacturers III-12

(2) Hydrogen Compressors III-13

(3) Hydrogen Purifiers and Dryers III-13

(4) Hydrogen Flow Control and Metering III-14

d. Hydrogen Storage Subsystem (An Option) III-14

e. Solar-to-Electricity Subsystems, Including the Electric-to-Electrolyzer Control Interface III-14

f. Battery Storage Subsystems (An Option) III-15

g. Thermal Storage Subsystem (An Option for Solar Thermal Systems Only) III-15

h. Control and Operation III-16

B. Cost Characterization of the Selected Solar/Hydrogen Production Systems III-16

1. Economic Assumptions III-16

2. Operating and Maintenance Cost Assumptions III-18

3. Subsystem and System Costs III-19

a. Water Electrolyzer Costs III-19

Appendix	Topic	Page
	b. Solar/Hydrogen Subsystem Cost Considerations	III-21
	c. Photovoltaic Solar/Hydrogen Production Systems	III-22
	d. Thermal Heat Engine Solar/Hydrogen Production Systems	III-22
	e. Wind Energy Solar/Hydrogen Production Systems	III-24
	f. Small Hydropower Solar/Hydrogen Production Systems	III-25
	4. Cash-Flow Benefits from Modular Construction	III-26
	ATTACHMENT A TO APPENDIX III	III-33
	Comparative Cost Analysis of Alternative Energy Storage Subsystems in Selected Solar/Hydrogen Systems	III-33
	Introduction and Purpose of Analysis	III-33
	Assumptions	III-35
	Method of Analysis	III-36
	Discussion of Results	III-39
	ATTACHMENT B TO APPENDIX III	III-41
	The Power Source/Electrolyzer Interface	III-41
	The Conventional Power Source Interface	III-43
	The Unconventional Power Source Interface	III-44
	Rotating Machines	III-44
	Photovoltaics	III-44
IV	Solar Hydrogen -Its Potential Market Sector and Technology Commercialization Considerations	IV-1
	General	IV-1
	A. Solar Hydrogen - Its Potential Market Sector	IV-1
	1. Overview of the Present Hydrogen Market	IV-1
	2. Small User Hydrogen Market Demand and Pricing Structure	IV-5

QUALITY

Appendix	Topic	Page
	Consideration of the Small User Hydrogen Market Sector	IV-5
	Captive and Merchant Hydrogen in the Small User Market	IV-7
	Prices Paid for Merchant Hydrogen	IV-8
	Cost of Merchant Hydrogen	IV-11
	Summary	IV-13
	B. Technology Commercialization Considerations	IV-15
	1. Time Lags in the Commercialization of Technologies	IV-15
	2. Observations	IV-20
	3. A Review of the Industrial Management Decision Making Problem	IV-21
	4. Summary	IV-23
V	Considerations Regarding Demonstration Programs as Presented in Rand Report R-1926-DOC, Analysis of Federally Funded Demonstration Projects and the Charpie Task Force Report	
	General	V-1
	Rand Report R-1926-C, Analysis of Federally Funded Demonstration Programs	V-1
	Definition of Demonstration Success	V-2
	Responsibilities for Planning and Operation	V-3
	Charpie Task Force Report	V-5
	ERDA As a Commercialization Agency Within Government	V-5
	The Demonstration Project as an Incentive to Commercialization	V-6

List of Figures

Figure	Topic	Page
1	Simplified Work Flow of the Project	2
2	Contract End Items, Volumes I and II, Content in Relationship to the Overall Flow of Project Work	3
3	An Illustration of the Interrelationships Between Classes of Solar Energy Conversion Technologies and Hydrogen Production Technologies	6
4	A Schematic Representation of the Solar Hydrogen Energy System From Solar Energy Input to Final Hydrogen Use in the Marketplace	8
5	A Generalized Estimate of the Comparative "Maturity" of Various Solar Energy Conversion and Hydrogen Production Technologies	9
6	A First-Level Block Diagram of a Solar Hydrogen Production System Comprised of a Solar Energy Conversion Technology (SECT) and a Hydrogen Energy Production Technology (HEPT)	11
7	System Installed Cost vs. Plant Factor for Hydrogen Costs of $25 to $100/Million Btu at Plant Book Lives of 5 and 25 Years	12
8	Photovoltaic/Electrolysis Production System Block Diagram	14
9	Projected Photovoltaic/Hydrogen Plant Cost vs. Plant Factor, Product Cost, and Book Life	15
10	Thermal Heat Engine/Hydrogen Production System Block Diagram	17
11	Projected Solar Thermal Heat Engine/Hydrogen Plant Cost vs. Plant Factor, Product Cost, and Book Life	18
12	Wind Energy Solar/Hydrogen Production System Block Diagram	19
13	Present and Projected Wind Energy Solar/Hydrogen Plant Cost vs. Plant Factor, Product Cost, and Book Life	20
14	Small Hydropower Solar/Hydrogen Production System Block Diagram	21

QUALITY

List of Figures

Figure	Topic	Page
15	Present and Projected Small Hydropower Solar/Hydrogen Plant Cost vs. Plant Factor, Product Cost, and Book Life	22
16	The Use of Hydrogen in the U.S. in Context With Total U.S. Energy Consumption	24
17	Projected U.S. Market Volume for Six Identified Major Small User Hydrogen Markets: 1980-2000 (Appendix IV)	24
18	Small User Hydrogen Costs vs. Required Delivery Rate (Appendix IV)	25
19	A Comparison of Fuel Prices and Merchant Hydrogen Prices to the Range of Projected Costs of Manufacture of Hydrogen from Solar Energy	30

List of Appendix Figures

Appendix I

Figure	Topic	Page
I-1	Energy Delivery Modes	I-2
I-2	The Hydrogen Energy System Concept	I-5
I-3	Fundamental Role of Hydrogen in Synfuels Production	I-7

Appendix II

II-1	An Illustration of the Basic Interrelationships Between Classes of Solar Energy Conversion Technologies and Hydrogen Production Technologies	II-2

Appendix III

III-1	Basic Solar/Hydrogen Production System	III-5
III-2	A General or Representative Solar/Hydrogen Production System Block Diagram Considering Control Interfacing and Energy Storage Needs in Real Systems	III-6
III-3	Photovoltaic/Hydrogen Production System Block Diagram	III-6
III-4	Thermal Heat Engine Solar/Hydrogen Production System Block Diagram	III-8
III-5	Wind Energy Solar/Hydrogen Production System Block Diagram	III-9
III-6	Small Hydropower Solar/Hydrogen Production System Block Diagram	III-10
III-7	Comparison of Fixed-Charge Rates for Two Weighted Costs of Capital	III-18
III-8	System Installed Cost vs. Plant Factor for Hydrogen Costs of \$25 to \$100/10^6 Btu at Plant Book Lives of 5 and 25 Years	III-20
III-9	Installed Cost of Electrolyzer Plants as a Function of Size	III-21
III-10	Projected Photovoltaic Solar/Hydrogen Plant Cost vs. Plant Factor, Product Cost, and Book Life	III-23
III-11	Projected Solar Thermal Engine Solar/Hydrogen Plant Cost vs. Plant Factor, Product Cost, and Book Life	III-24

List of Appendix Figures

Figure	Topic	Page
	Appendix III, Continued	
III-12	Present and Projected Wind Energy Solar/Hydrogen Plant Cost vs. Plant Factor, Product Cost, and Book Life	III-25
III-13	Present and Projected Small Hydropower Solar/Hydrogen Plant Cost vs. Plant Factor, Product Cost, and Book Life	III-27
III-14	Cumulative Sum of the Initial Plant Investment Available for Reinvestment as a Result of Modular Plant Construction vs. Non-Modular Construction at the End of the Non-Modular Plants' Normal Construction Time	III-29
	Attachment A to Appendix III	
A-1	Generalized Selected Solar/Hydrogen System	III-34
A-2	Solar Hydrogen System with Energy Storage Alternatives as Analyzed	III-37
	Attachment B to Appendix III	
B-1	An Idealized Electrolyzer Load	III-42
B-2	An Electrolysis Cell Voltage-Current Characteristics	III-42
B-3	An Idealized Power Source with an Idealized Electrolyzer as a Load	III-43
B-4	System Composite Solar Photovoltaic and Hydrogen Electrolysis Cell Interaction	III-45
B-5	Voltage-Current Composite for Photovoltaic Solar/Hydrogen Production Facility	III-46
	Appendix IV	
IV-1	The Use of Hydrogen in the U.S. in Context with Total U.S. Energy Consumption	IV-2
IV-2	Small User Hydrogen Cost vs. Required Volume	IV-3
IV-3	Comparison of Merchant Hydrogen Prices with Advanced Electrolyzers Production Costs for Industrial Users as a Function of Demand for 1980, in Constant 1977 Dollars	IV-4
IV-4	Comparison of Merchant Hydrogen Prices with Advanced Electrolysis Production Costs for Industrial Users as a Function of Demand for 2000, in Constant 1977 Dollars	IV-5

QUALITY

List of Appendix Figures

Figure	Topic	Page
	Appendix IV, Continued	
IV-5	Projected U.S. Market Volume for the Six Identified Small User Hydrogen Markets: 1980-2000	IV-7
IV-6	Projected Merchant Hydrogen Market	IV-9
IV-7	1977 Merchant Hydrogen Prices	IV-12
IV-8	A Simplified Presentation of the Factors Influencing the Business Management Decision Making Process	IV-22
	Appendix V	
V-1	Information Flow for a Successful Demonstration Project	V-4

List of Tables

Table	Topic	Page
1	Actual Merchant Hydrogen Prices Paid by Customers	26
2	Factors Contributing to the Delay of "First Realization" of New Technologies in the Chemical Industry	27

List of Appendices Tables

Appendix III

III-1	EPRI Recommended Fixed Charge Rates	III-17
III-2	Fixed Charge Rates Assumed	III-17
III-3	Installed Cost of Subsystems for Wind Energy Solar/Hydrogen Production Systems	III-26
A-1	Energy Storage Subsystem Types for the Selected Systems	III-34
A-2	Assumed Capital Costs and Operating Efficiencies for Energy Storage Systems	III-36
A-3	Incremental Cost of Hydrogen Output from the Various Storage Subsystem Types Possible in Solar/Hydrogen Systems	III-38

Appendix IV

IV-1	Projected Demand for Small User Hydrogen	IV-6
IV-2	Merchant Hydrogen Share of Small User Hydrogen (1977)	IV-8
IV-3	Actual Merchant Hydrogen Prices Paid by Customers	IV-10
IV-4	Time Lags from "First Conception" to "First Realization" for Notable Technological Innovations	IV-16
IV-5	Intervals, Definitions, Sample Characteristics and Findings from Nine Empirical Studies of Time Lags	IV-17
IV-6	Relative Frequency of Occurrence of Factors Causing Delay in the Commercialization of Innovations	IV-19
IV-7	Relative Occurrence of Factors Causing Delay in Commercialization as Affected by Magnitude of Technological Change	IV-20

QUALITY

Section 1

INTRODUCTION

A. Background

This systems assessment provides an overview of the present state-of-the-art of technologies and systems capable of producing and delivering hydrogen from solar energy. Its primary objective is to provide the U.S. Department of Energy (DOE) with recommendations for appropriate development and demonstration activities that may encourage commercialization of such systems.

A secondary objective is to provide a means of supporting the development of communications between the technological community and the industrial firms presently engaged in the production, delivery, and use of hydrogen.

The overall effort was initiated by the DOE through its Division of Energy Storage Systems (STOR). The study's financial support was provided through an interagency agreement between the DOE and the National Aeromautics and Space Administration via NASA's institutional contract with the Jet Propulsion Laboratory (NAS7-100). The organization of an assessment "core group," the development of the study approach, constraints and guidelines, and the assembly of the basic technology data base were performed by the JPL staff or through outside consultants to JPL. In accord with the DOE request to the JPL to minimize its in-house technical involvement, the detailed assessment and final report preparation was contracted to Escher:Foster Technology Associates, Inc. (E:F).

The project was accomplished over a period of approximately 18 months. It has required the expenditure of approximately $100,000 of contracted and consulting activity or approximately a 2-man-year level-of-effort, including JPL in-house participation.

This report consists of a highly condensed summary supported by details contained in its Appendixes. The appropriate Appendixes are cited in the summary and appropriate references are cited in the Appendixes.

B. Method Employed

The overall assessment approach involved three contributing groups in the performance of the activities illustrated in Figure 1.

Monographs on solar energy conversion, hydrogen energy production and delivery, and supporting technologies were provided by authorities in these various fields. A 4-person core group performed an initial systems assessment and engineering analysis to screen combinations of those technologies that might be used in the production of hydrogen from solar energy (Step 1). A study of the general hydrogen market and aspects of the commercialization of new technology generally was provided by E:F (Step 4).

QUALITY

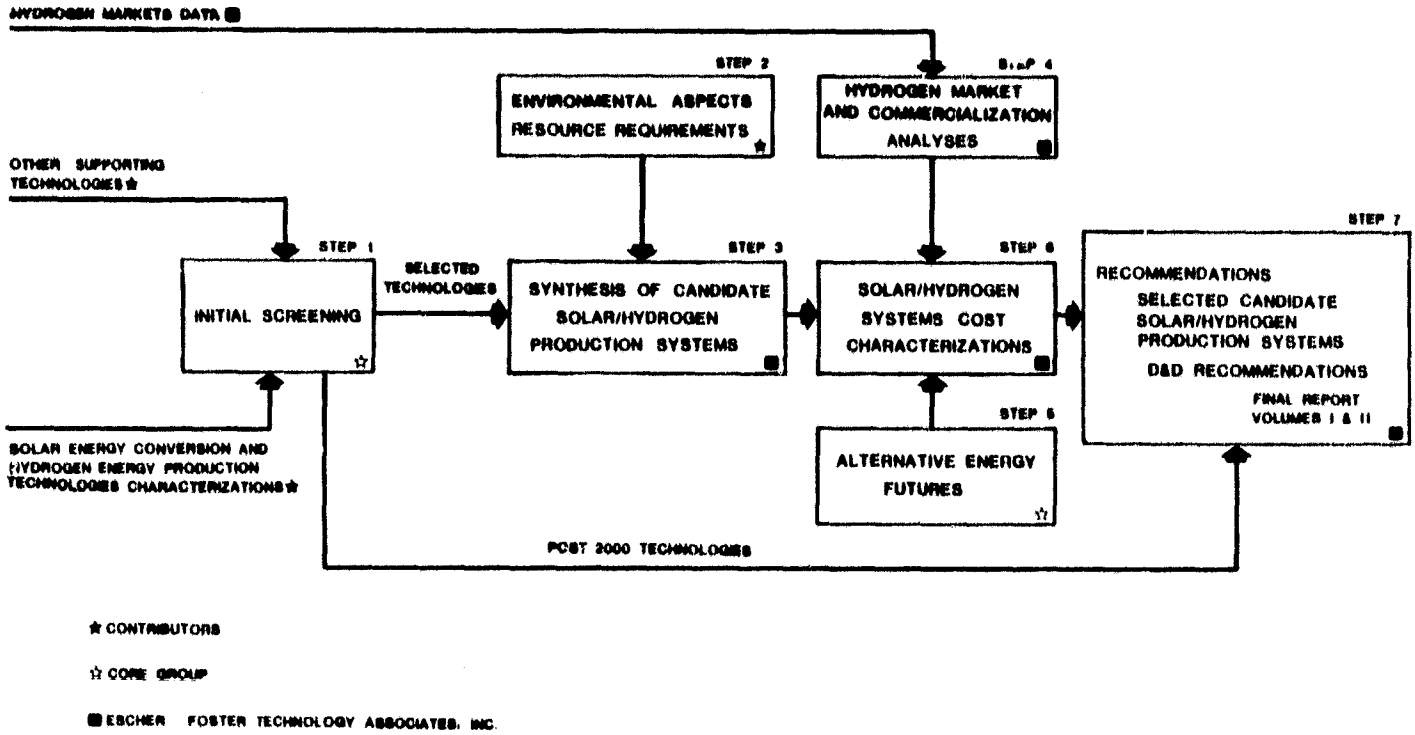

Figure 1. SIMPLIFIED WORK FLOW OF THE PROJECT

Market price projections for hydrogen that resulted from this study (Step 4), together with consideration of the general problems associated with the commercialization of new technology, established the price range for product hydrogen. Comparing the cost of hydrogen produced by a range of candidate solar/hydrogen systems with hydrogen market price projections (Step 3), along with other considerations (Steps 2 and 5) led to the identified need for a further characterization of 4 candidate solar/hydrogen systems (Step 6).

This study was predicated on the premise that solar energy will become a major energy resource in the future. The study team has attempted to place present and projected technological capabilities in perspective with the realities of the marketplace for hydrogen as a commodity and as a fuel. Although some might hope that broader areas of applicability for these technologies could be brought into being, the findings of this study indicate that the earliest entry point for solar/hydrogen systems is in the small-user commodity hydrogen marketplace. Then, if such an initial market entry can be made, improvement and refinement of these systems and reductions in product cost should follow. Finally, if solar/hydrogen product costs can be reduced through these efforts, as fossil fuel costs increase, solar/hydrogen systems might then evolve from the commodity gas market into the energy gas market. (See Appendix I). (Also, see footnote on Page 29.)

QUALITY

In the opinion of the study team, the 4 solar/hydrogen systems that have the most reasonable probability of achieving a "commercialized" status within the next two decades are:

- Photovoltaic/water electrolysis systems
- Solar thermal-heat engine-generator/water electrolysis systems
- Wind energy-generator/water electrolysis systems
- Small hydropower/water electrolysis systems.

C. Structure of This Report (Figure 2)

This report is divided into two volumes. The monographs provided by the contributing technical specialists in the fields of solar energy conversion technologies and hydrogen production and delivery technologies have been summarized, edited, compiled, and in many cases extensively supplemented with information from the general literature to form Volume II, "Solar/Hydrogen System Technologies." The systems assessment and preliminary systems engineering efforts of the core group, supported by E:F, have been compiled together with development and demonstration recommendations to form Volume I, "Solar/Hydrogen Systems for the 1985-2000 Time Frame."*

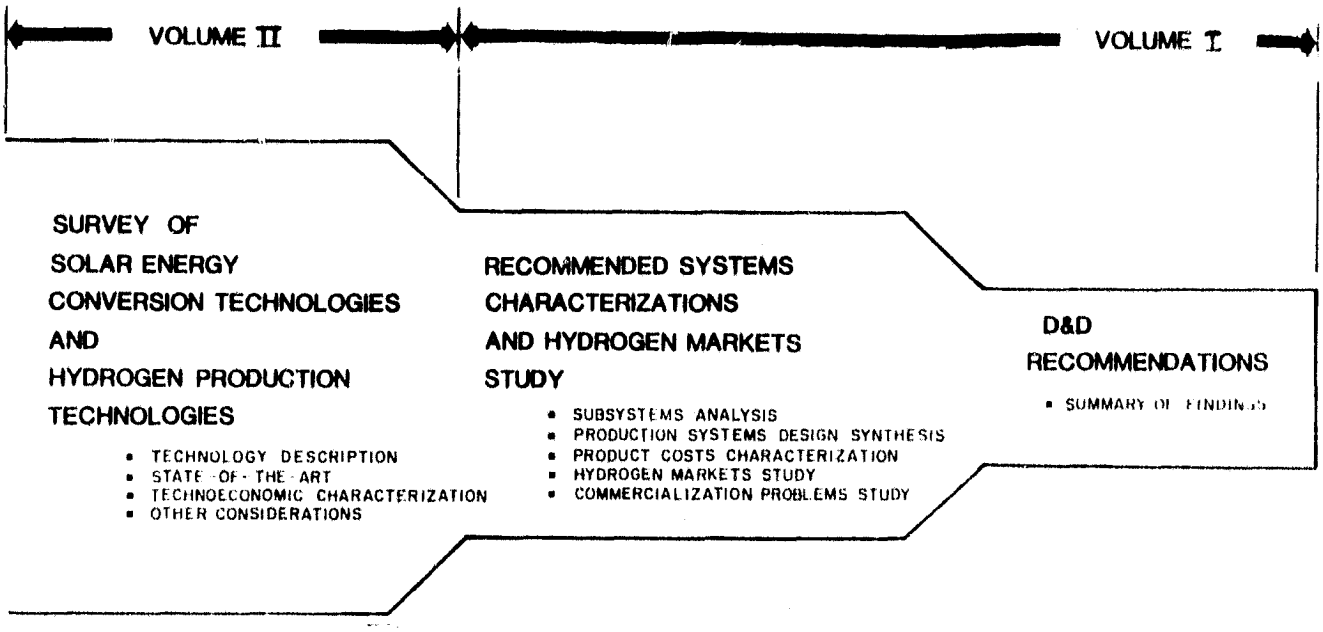

Figure 2. CONTRACT END ITEMS FOR VOLUMES I AND II, IN RELATION TO THE OVERALL FLOW OF PROJECT WORK

* Those solar/hydrogen systems potentially applicable to the beyond-2000 time frame are discussed in Appendix II.

QUALITY

Section II

APPROACH TO SOLAR/HYDROGEN TECHNOLOGY EVALUATION

A. Guidelines, Constraints and Approach

Guidelines and Constraints

The following guidelines and constraints provided the focus for this assessment and led to the selection of the four candidate systems:

1. The solar/hydrogen systems should be "commercializable" in two decades. "Commercializable" is taken, for the purposes of this assessment, as meaning:

   - Basic research, development, and demonstration processes will have been completed.
   - All components and/or systems will be available for purchase, though not necessarily as off-the-shelf vendor items.
   - The purchaser will have reasonable confidence in the costs, delivery schedule, and performance quoted by the manufacturer.

2. The marketplace is the entire U.S.

3. Conventional business practices are to be used.

4. All hydrogen uses are to be considered.

5. There will be no major Government intervention or initiative (i.e., no "mega-projects"), but the role of incentives is to be considered.

6. No technological "breakthroughs" are to be assumed.

These constraints and guidelines enabled the assessment to focus rapidly on a method of categorizing the various technologies, and the systems comprised of these technologies. They also helped evaluate the systems in terms of their potential for producing hydrogen at a cost compatible with some portion of the existing and projected commodity and fuel gas markets.

Approach

The candidate technologies and solar/hydrogen systems composed of these technologies were first evaluated in terms of their ability to meet Constraint 1 (principally, their state of development), then Constraints 6, 5, 3, and 4, respectively. The cost of the hydrogen product, manufactured by the surviving systems, was then characterized for evaluation with respect to Constraint 2 (the marketplace). The major problem encountered in this approach was the

PRECEDING PAGE BLANK NOT FILMED

development of an appropriate basis for characterizing the product cost in a useful manner.

An examination of the interrelationships between types of solar energy conversion technologies and hydrogen production technologies (Figure 3) illustrates that, while the various solar energy conversion technologies may be separated, the combination of technological options leading to the production of hydrogen does not invite easy categorization. The potential complexity of the problem becomes even more apparent when the complete solar/hydrogen energy system shown in Figure 4 is considered. From the "top to the bottom," this system illustrates the point that solar/hydrogen production systems may be designed and constructed which:

- May use direct, indirect, or a combination of both solar energy forms as the primary energy resource
- May be constructed over a range of scales
- May use any of a number of solar energy conversion technologies
- May use any of a number of hydrogen energy production technologies
- May use any of a number of delivery options
- May serve two basic market uses: commodity gas markets, and fuel gas markets
- May serve two market modes: captive (on site) and merchant.

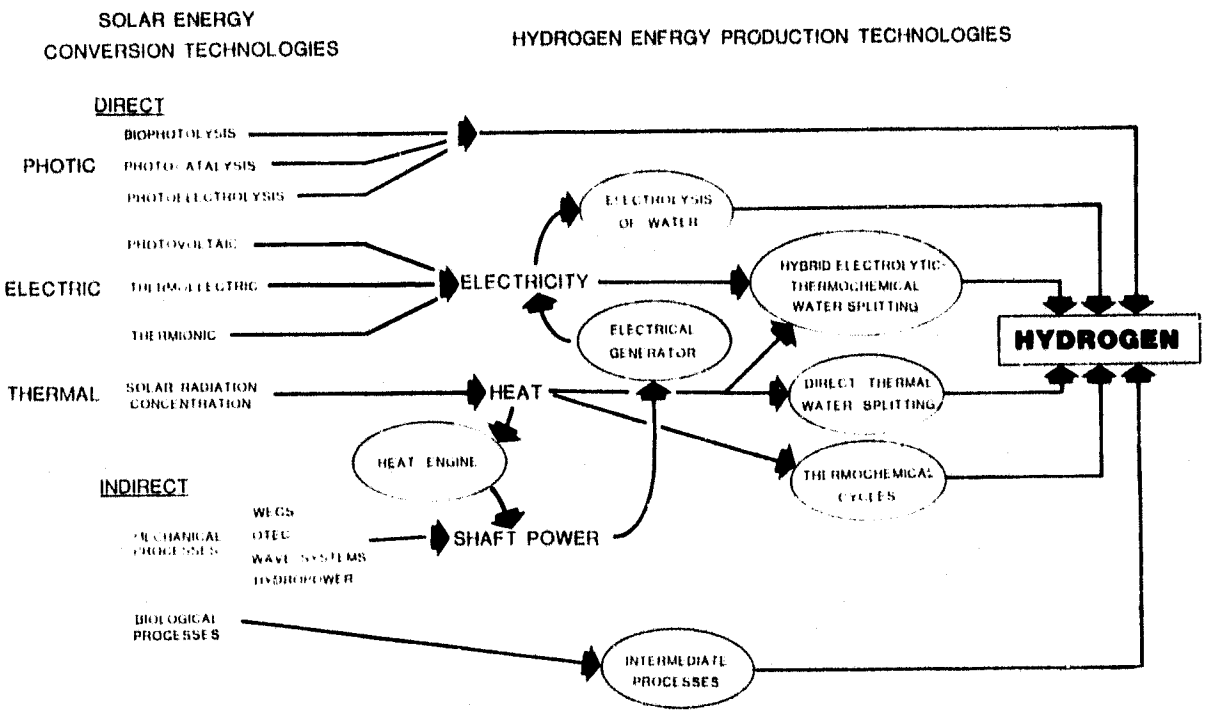

Figure 3. AN ILLUSTRATION OF THE INTERRELATIONSHIPS BETWEEN CLASSES OF SOLAR ENERGY CONVERSION TECHNOLOGIES AND HYDROGEN PRODUCTION TECHNOLOGIES

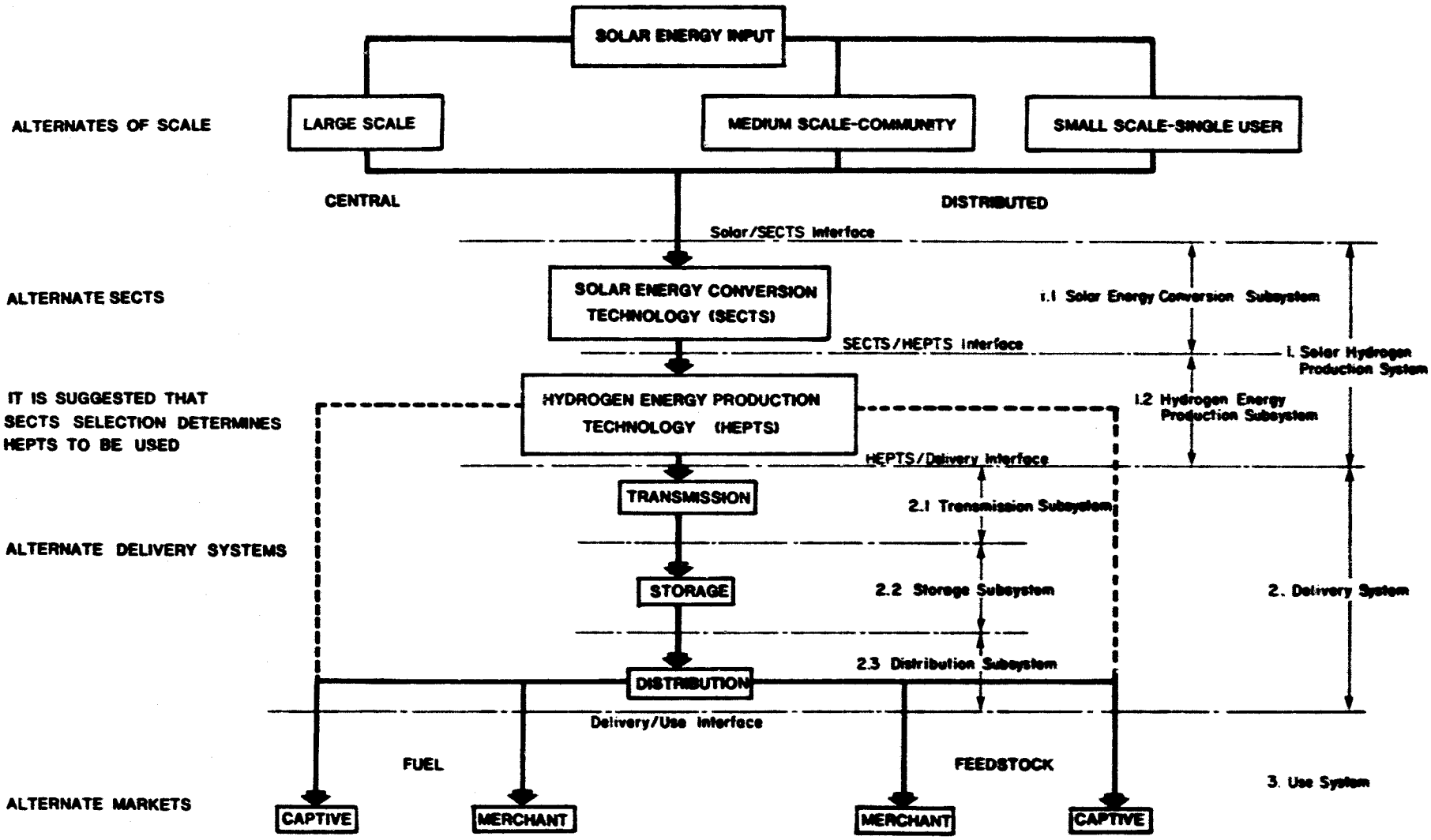

Figure 4. A SCHEMATIC REPRESENTATION OF THE SOLAR HYDROGEN ENERGY SYSTEM FROM SOLAR ENERGY INPUT TO FINAL HYDROGEN USE IN THE MARKETPLACE

The number of specific system design permutations which could result from the options illustrated in Figures 3 and 4 is obviously large. Moreover, the picture is further complicated by the fact that all these options may be modified by site-specific considerations such as the form and intensity of a local solar energy resource, local environmental constraints and siting restrictions, and a range of business economic considerations unique to a specific hydrogen market or specific captive-user's business operations. However, the screening with respect to Constraint 1 (commercializability) considerably reduced the number of system permutations which required in-depth consideration by eliminating a large number of candidate technologies from further consideration. Consequently, only the site-specific aspects of solar hydrogen systems remained as an unbounded variable. Since it was not yet possible to propose candidate sites realistically, it was concluded that a comparison between hypothetical site-specific system designs would not prove useful.

It was then decided that the best approach was to go directly to the most general parameters which could be used to characterize the solar/hydrogen product cost using any given system at a specific site. The parameter elected to characterize the system was total installed cost in dollars/kW of hydrogen output capacity; the parameter elected to characterize the site was plant factor. Using both installed costs and plant factors as inputs, a resulting product cost was established on a utility financing basis (25-year book life) and on an industrial financing basis (5-year book life).

B. Commercialization Considerations (Appendix IV-B)

Trends apparent from the history of new technology commercialization indicate that periods of time on the order of two decades are usually required before commercialization can actually be achieved. This finding indicates that the most advanced conversion and hydrogen production technologies should be selected preferentially. A general assessment of the status for the technologies investigated resulted in the findings presented in Figure 5.*

C. Market Considerations (Appendix IV-A)

Solar/hydrogen will not be competitive by the year 2000 with fuel gas currently at $2.00-$3.00/million Btu or with liquid fuels currently at $8.00-$10.00/million Btu. However, a market possibility does appear to exist in the small-user hydrogen market place where prices for merchant hydrogen ranging from $20-$200/million Btu are paid (Appendix IV). Four candidate systems were found to have product costs in the range of $25 - $100 /million Btu (1980 dollars) for hydrogen at the solar/hydrogen system site. However, for non-captive installations, delivery costs must be added to the product hydrogen manufacturing cost.

---

* All investigated technologies are discussed in detail in Volume II.

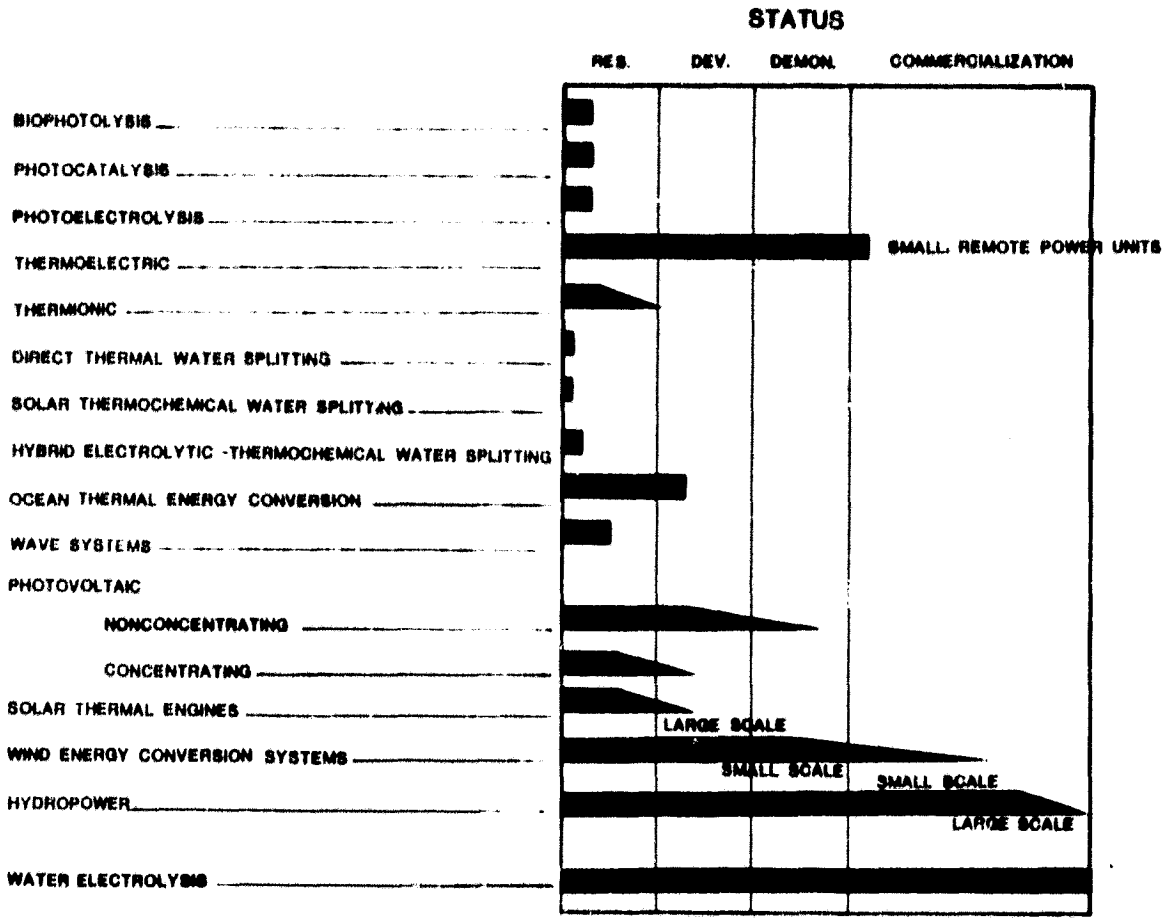

Figure 5. A GENERALIZED ESTIMATE OF THE COMPARATIVE "MATURITY" OF VARIOUS SOLAR ENERGY CONVERSION AND HYDROGEN PRODUCTION TECHNOLOGIES

D. Summary

Technologies that are the most mature can reasonably be expected to offer the most information upon which to base reasonable product cost projections. It is also obvious that immature technologies, for which adequate cost and performance projections are not available, cannot be definitively assessed in terms of their ability to meet a market need. However, the potential for breakthroughs in these technologies must be kept in mind even though consideration of such breakthroughs was specifically prohibited by the guidelines of this study.

The study team initially surveyed all technological options to determine their relative maturity. The hydrogen product price that could be provided by systems combining appropriate technologies was characterized as a function of installed energy production capacity cost per kilowatt and plant load factor. Those technologies which offered a reasonable probability of producing hydrogen within the range of present and projected hydrogen market prices are recommended as being suitable candidates for commercialization within the two-decade constraint of this assessment.

QUALITY

Section III

SOLAR/HYDROGEN SYSTEMS FOR THE 1985-2000 TIME FRAME

Introduction

System Designs

During this phase of the work, solar/hydrogen systems made up of the selected solar energy conversion technologies and water electrolysis were synthesized. (See Figure 6 and Figures 8, 10, 12, and 14.) Electrolysis is readily interfaced with the selected solar energy technologies and is itself a fully commercialized technology. Moreover, active research and development programs are underway to improve the cost and efficiency of electrolyzers.

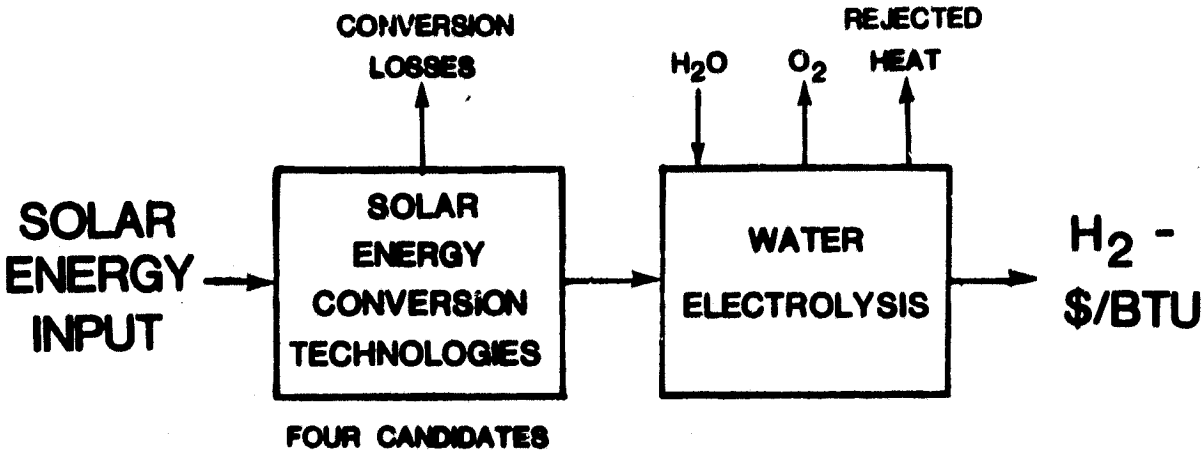

Figure 6. A FIRST-LEVEL BLOCK DIAGRAM OF A SOLAR HYDROGEN PRODUCTION SYSTEM COMPRISED OF A SOLAR ENERGY CONVERSION TECHNOLOGY AND A WATER ELECTROLYSIS

System Economics

In 1977, the Electric Power Research Institute (EPRI) introduced a Technical Assessment Guide for the electric power industry. This guide has since been used throughout the utility industry in developing cost estimates for energy systems; it established fixed-charge rates, the methods of handling depreciation and investment tax credits, operating and maintenance costs, etc., and it forms the basis of the cost analyses presented here.

The graph presented in Figure 7 was developed using the EPRI method. Since this graph forms the basis upon which the four selected systems were compared, understanding it is critical to understanding the subsequent discussion. For this reason, this method of presentation is discussed in some detail.

PAGE BLANK NOT FILMED

QUALITY

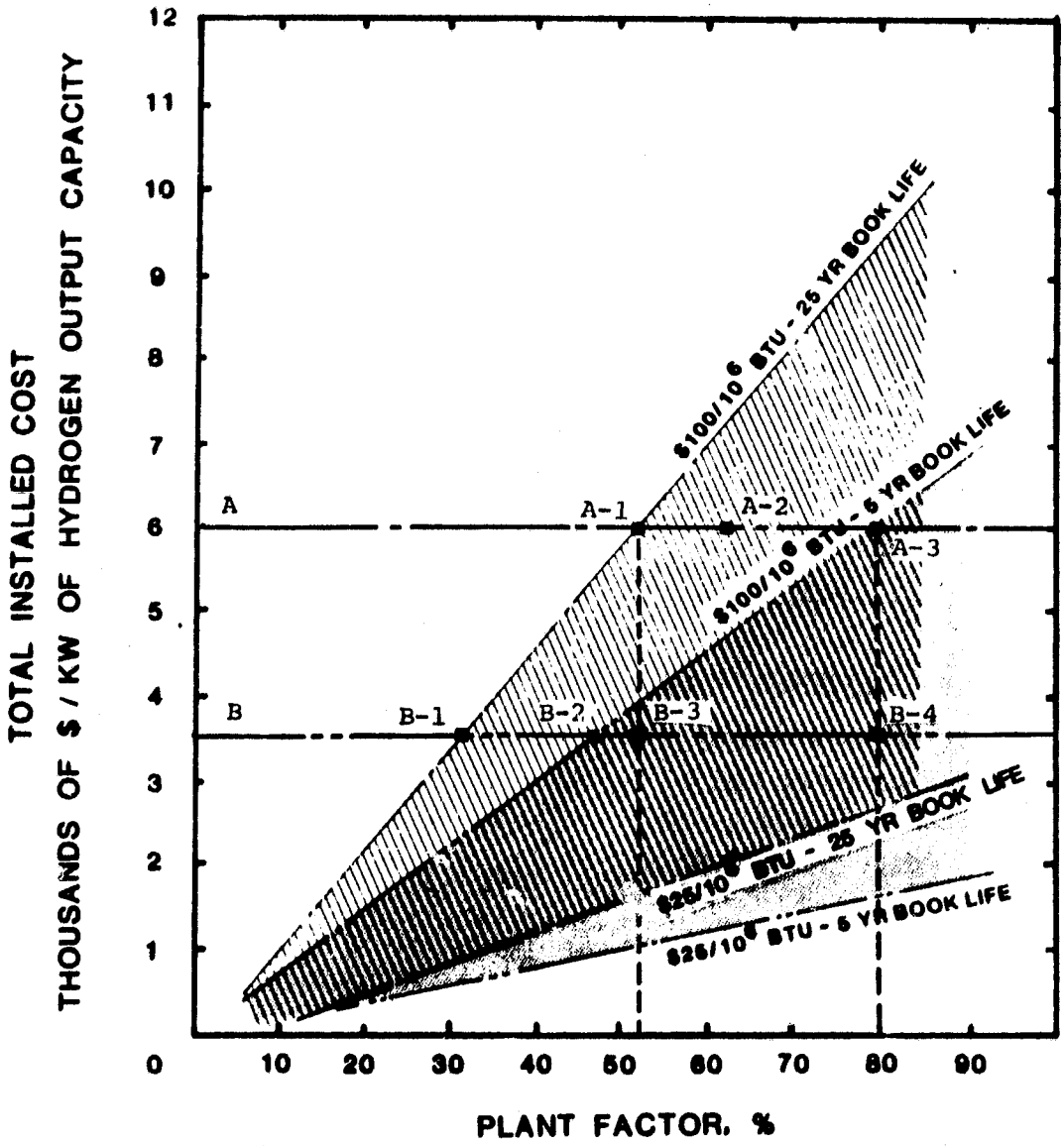

Figure 7. SYSTEM INSTALLED COST VS. PLANT FACTOR FOR HYDROGEN COSTS OF $25 TO $100/MILLION BTU AT PLANT BOOK LIVES OF 5 AND 25 YEARS (1980 Dollars)

Given any state-of-the-art in a field of energy conversion technology, a given energy production system using that technology can be described in terms of its nominal installation cost in dollars per kilowatt of hydrogen energy* production capacity. For example, if a given energy production technology has an installed price of $6000/kW, this price will be represented by Line A in Figure 7. A second parameter for describing an energy production system is plant factor. If any energy producing system operates at approximately a 50% plant factor, each kilowatt of installed capacity would operate, on the average, of 12 hours per day. If this were a hydrogen plant, and the product could be sold at $100/million Btu, sufficient revenue would be earned to permit that plant to be a viable business enterprise if it were financed on a 25-year book life basis (utility financing). Thus, the point A-1 represents the minimum plant factor at which the $6000/kW hydrogen output capacity system must operate to earn enough revenue to meet its financial needs under a 25-year book life constraint. If that system could be operated at a higher plant factor, say 60% (point A-2), the hydrogen product could be sold at less than $100/million Btu. If the same installation were required to operate on industrial financing rules, i.e., a 5-year book life, a plant factor of nearly 80% would be required to achieve a $100/million Btu hydrogen product cost (point A-3).

If, through any of a number of means, the installed costs can be reduced (line b), the plant factors required to earn sufficient revenue to meet all plant costs would be reduced. Point B-1 and B-2 illustrate this for the $100/million Btu hydrogen product cost and 25- and 5-year plant book lives, respectively, for a facility installed capital cost of $3500/kW.

In the following presentation, the installed cost plant factor boundaries determined for the selected solar/hydrogen systems were overlayed on a Figure 2-type graph. This results in a rectangular area similar to the area in Figure 7, defined by points A-1, A-3, B-3, and B-4. The area within the boundaries illustrates the range of potential hydrogen product costs subject to the actual installed cost, plant factor, and plant book life.

The plant factor boundaries determined for each case result from data available in the literature. These are considered by the study team to be reasonable. The actual plant factor for any system is a site-specific condition dependent upon both the energy available and the system, energy storage, and sizing considerations. In all cases, lower plant factors are possible, although generally not economic. Likewise, for those system designs where sizing and storage can affect plant factor, higher plant factors can be obtained, usually at the expense of under-utilizing the energy resource or by increased capital costs.

The hydrogen product price range shown in Figure 7--$25 and $100 per million Btu--are representative of costs presently being paid and projected to be paid in the forseeable future in the small-user sector of the general commodity hydrogen market, which is the highest priced sector of the hydrogen market (Appendix IV). These will be discussed later. Solar/hydrogen systems which do not yield an installed cost/plant factor area which has some portion below the $100/million Btu, 25-year book life line will most likely be non-competitive within the time boundary of this assessment (year 2000).

---

* Higher heating value basis -- 61,000 Btu/lb.

The following four solar/hydrogen systems were selected on the basis of the assigned selection criteria (see discussion on Pages 5 - 10):

1. Photovoltaic/water electrolysis

2. Thermal heat engines/water electrolysis

3. Wind energy/water electrolysis

4. Small hydropower/water electrolysis.

It should be noted that no byproduct oxygen cost credit has been assumed in any of the analyses presented in this assessment.

A. Photovoltaic/Water Electrolysis Production Systems (Figure 8, Appendix III)

The installed cost/plant factor boundaries for photovoltaic solar/hydrogen production systems are shown in Figure 9. Two regions designated as "A" and "B" are shown. Region B assumes the achievement of the 1982 photovoltaic array cost goal of $2/peak watt electric (1975 dollars), with the installed cost estimated to be 150% of the photovoltaic array cost. After adjusting to 1980 dollars, the photovoltaic subsystem cost was matched with

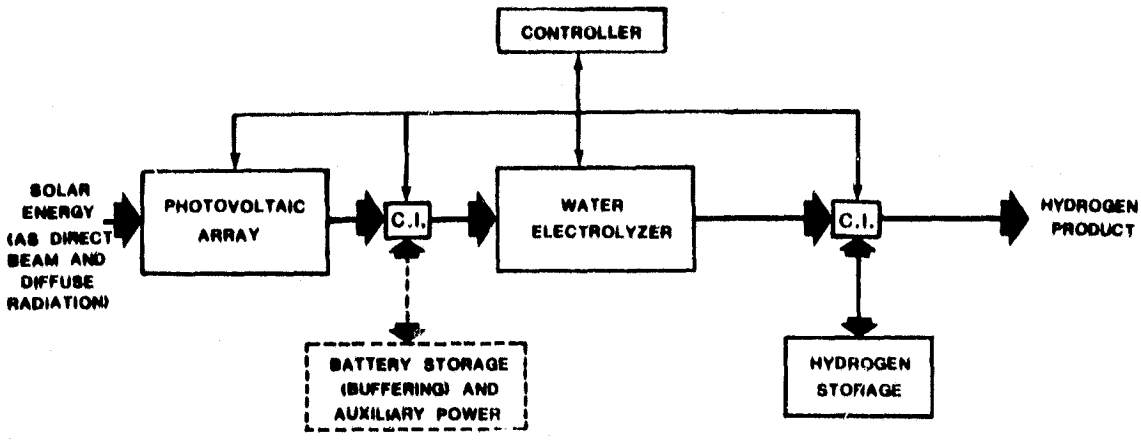

C.I.: CONTROL INTERFACE, E.G., POWER CONDITIONING, VALVING, COMPRESSION.

Figure 8. PHOTOVOLTAIC/ELECTROLYSIS PRODUCTION SYSTEM BLOCK DIAGRAM

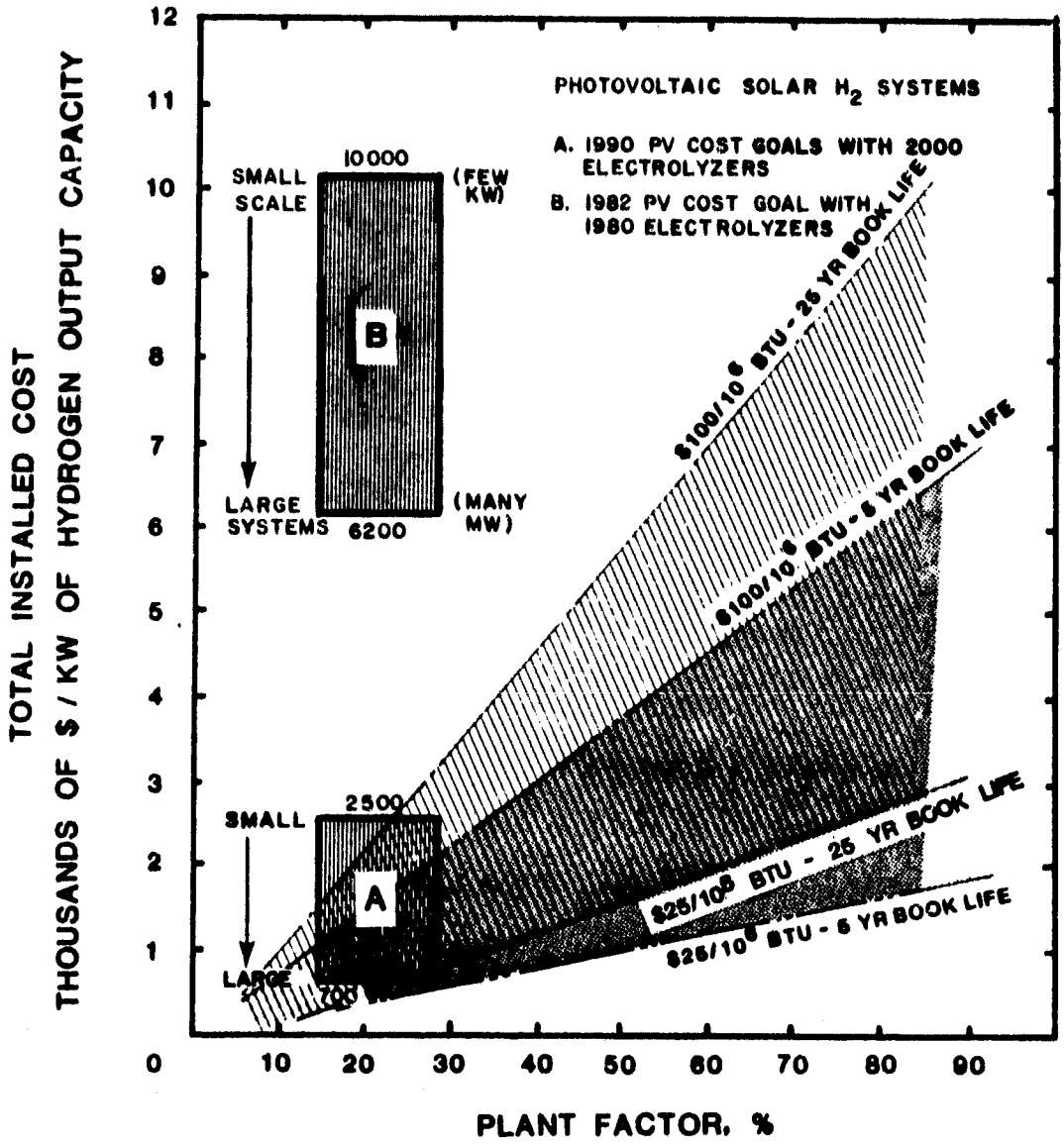

Figure 9. PROJECTED PHOTOVOLTAIC/HYDROGEN PLANT COST VS. PLANT FACTOR, PRODUCT COST AND BOOK LIFE (1980 Dollars)

QUALITY

present technology electrolyzers to obtain total system cost. Electrolyzers at the 10-kW and the 30-MW system size level were selected to define the upper and lower bounds of Region B. Region A was established in the same manner as Region B, with the difference being that the 1990 photovoltaic array cost goal of $0.20/peak watt electric (1975 dollars) was assumed, along with advanced technology electrolysis equipment.*

Conclusion

For photovoltaic/hydrogen production systems to be commercially viable in the small-user hydrogen market, the 1990 photovoltaic cost goals and the year-2000 electrolyzer efficiency goals must be achieved. Neither present technologies nor near-term projected technology improvements will yield viable systems. However, these observations do not eliminate the need to gather experience in the construction and operation of such systems between now and 1990 to 2000 if there is high confidence that the photovoltaic and advanced electrolyzer cost goals will be achieved.

B. Thermal Heat-Engine Solar/Hydrogen Production Systems (Figure 10 and Appendix III)

Figure 11 presents the estimated installed cost/plant factor boundaries for thermal heat engine solar/hydrogen production systems; again, two regions are shown. Region B represents systems in the 100-kW class for the 1990 to 2000 time period, and Region A represents systems of 1 to several hundred megawatts for the same time period. Solar to electricity technology costs ranged from $1800 per kW_e (1978 dollars) for the smaller systems in 1990 to $1000 per kW_e (1978 dollars) for the larger systems in the year 2000. The electrolyzer technology assumed was midpoint (between present and advanced) for the 1990 time frame, and advanced for the year-2000 time frame.

Conclusion

Solar thermal heat engine/water electrolysis systems require additional development. The key to their commercial viability lies mostly in cost reduction through volume production in small-scale systems and possibly in economies-of-scale in large systems.

---

* If systems were analyzed on the basis of today's electrolyzer and photovoltaic technologies, installation costs would be very high, in the range of $20,000/kW of hydrogen output capacity, out of the range of Figure 9. See Appendix III for a discussion of electrolyzer costs and efficiencies, both present and future.

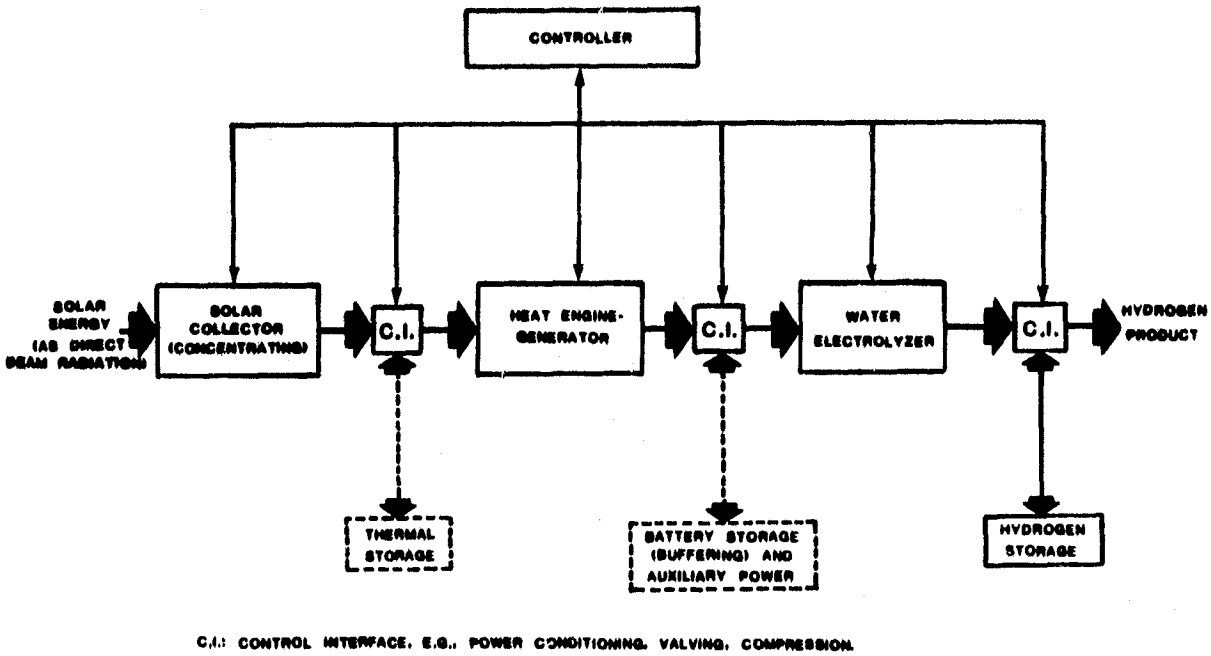

Figure 10. THERMAL HEAT ENGINE/HYDROGEN PRODUCTION SYSTEM BLOCK DIAGRAM

QUALITY

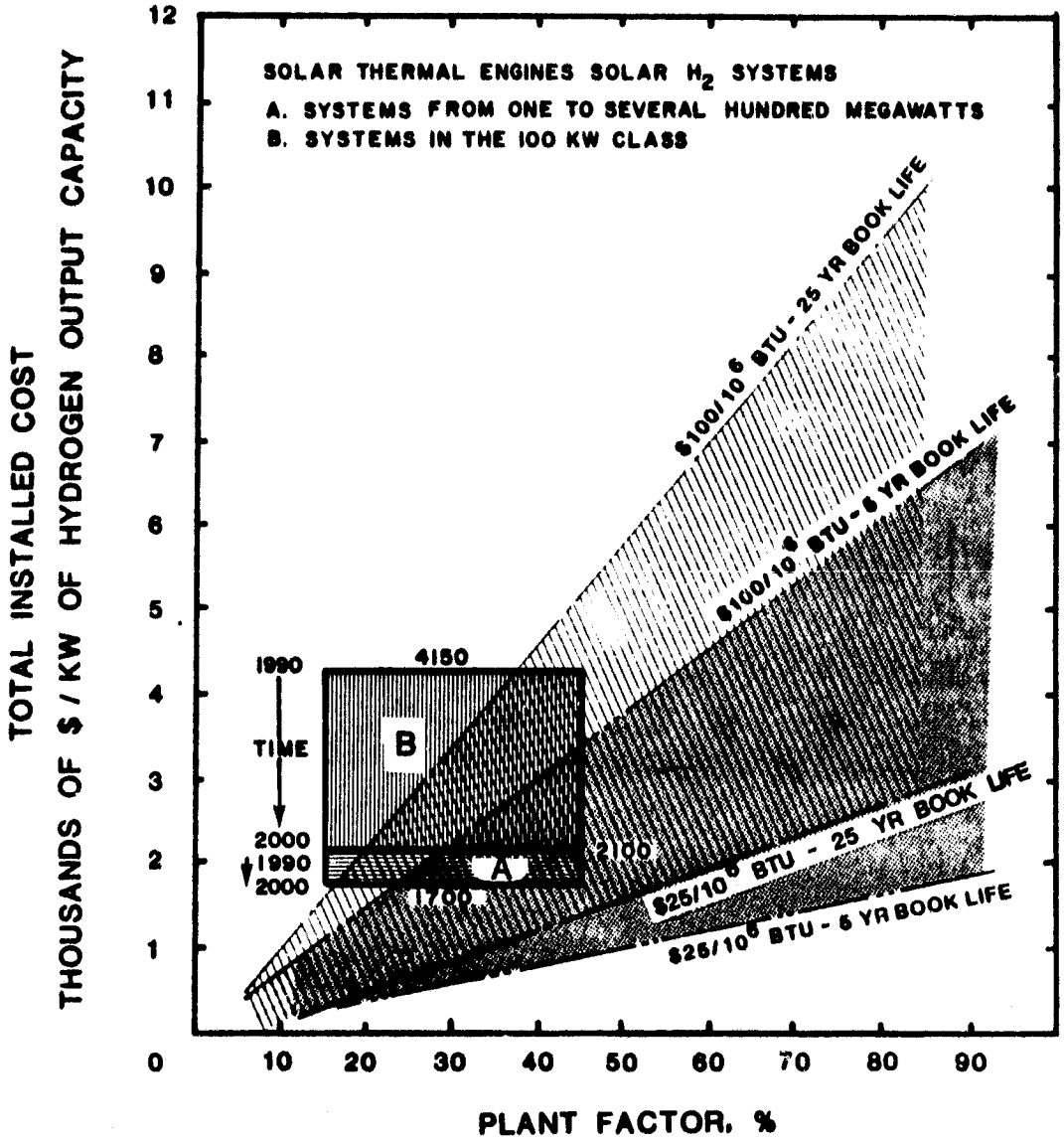

Figure 11. PROJECTED SOLAR THERMAL HEAT ENGINE/WATER ELECTROLYSIS PLANT COST VS. PLANT FACTOR, PRODUCT COST, AND BOOK LIFE (1980 Dollars)

C. Wind Energy/Water Electrolysis Production Systems (Figure 12 and Appendix III)

Three estimated installed cost/plant factor boundary regions are shown for wind energy solar/hydrogen production systems in Figure 13. Regions A through C roughly correspond to systems of 10-MW, 500-kW, and 10-kW system sizes, respectively. Except for Region A, which represents large systems in the year 2000, the regions' upper and lower boundaries reflect expected system improvements with time.

Conclusions

Wind energy/hydrogen systems in the 10-kW class are presently not economically viable. They may become so in the future if the wind energy market develops sufficiently to permit significant cost reductions through mass production. With present technology, systems in the 500-kW class and above appear economically viable at present and this situation will be improved if volume production of large units is supported by growth in the overall wind energy systems marketplace.

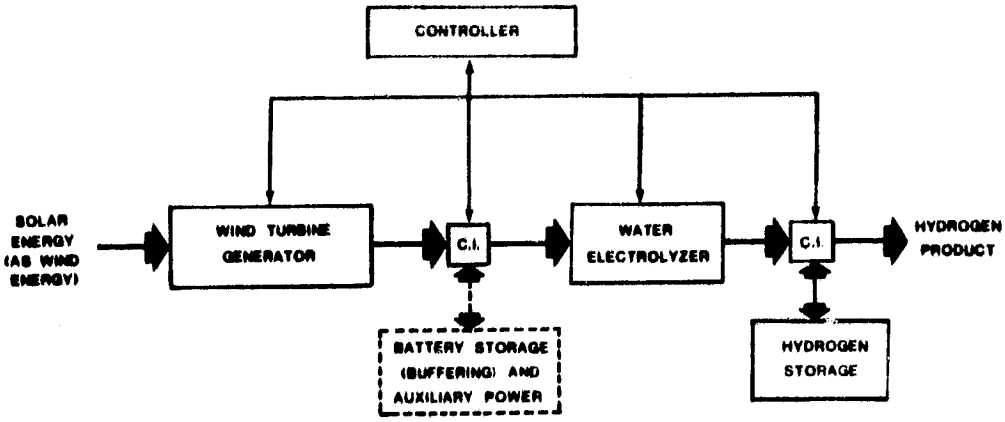

C.I. CONTROL INTERFACE. E.G., POWER CONDITIONING, VALVING, COMPRESSION.

Figure 12. WIND ENERGY SOLAR HYDROGEN PRODUCTION SYSTEM BLOCK DIAGRAM

D. Small Hydropower/Water Electrolysis Production Systems (Figure 14 and Appendix III)

The functional diagram for small hydropower/hydrogen systems (Figure 14) is quite similar to that of wind hydrogen systems. Both convert an indirect solar energy resource (contained in the form of kinetic energy of a fluid) into shaftpower with the same sequence of energy conversion steps leading to the hydrogen product. However, the hydropower case often provides a greater degree of "manageability" of its falling water input and hence higher plant factors than direct solar or wind conversion technologies. This manageability is provided by the use of the upstream water reservoir as an energy storage mechanism.

QUALITY

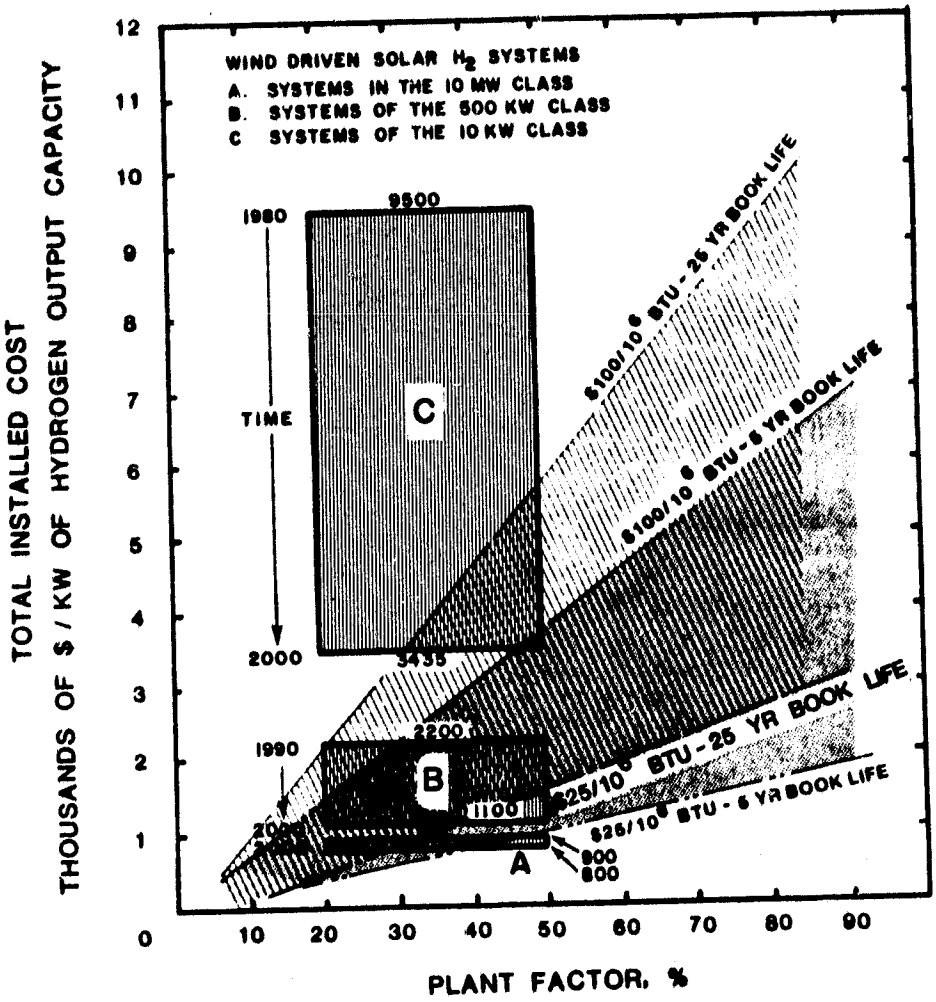

Figure 13. PRESENT AND PROJECTED WIND ENERGY SOLAR/HYDROGEN PLANT COST VS. PLANT FACTOR, PRODUCT COST, AND BOOK LIFE (1980 Dollars)

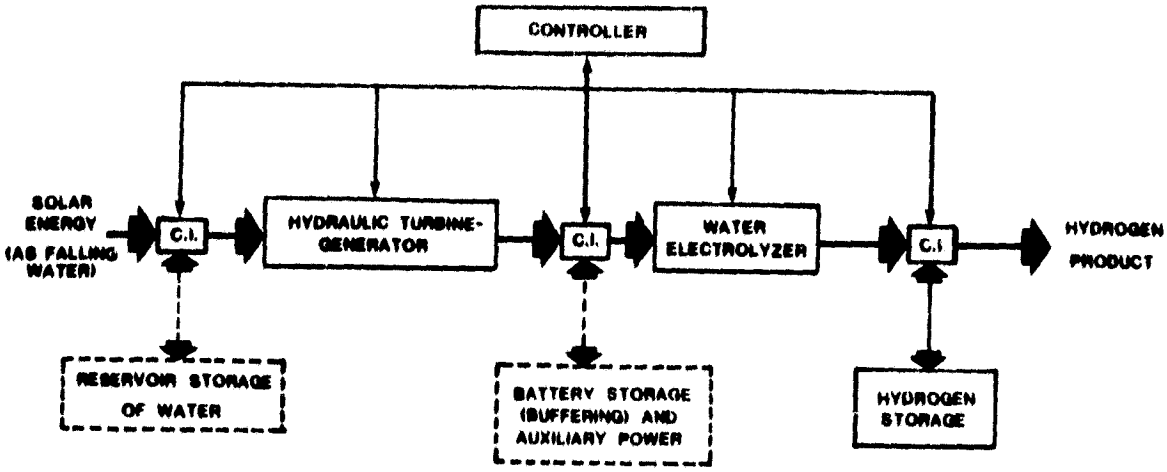

C.I. CONTROL INTERFACE, E.G., POWER CONDITIONING, VALVING, COMPRESSION.

Figure 14. SMALL HYDROPOWER SOLAR/HYDROGEN PRODUCTION SYSTEM BLOCK DIAGRAM

Hydropower is a mature technology, with costs in 1980 dollars ranging from $2750/kW$_e$ for 200-kW systems down to $440/kW$_e$ for megawatt-size systems. Since the technology is so mature, production-related cost reductions (rather than technology-related cost reductions) are more likely for this solar-to-electricity technology. However, in keeping with the current industry practice of single unit custom production in response to a specific customer order, no solar-to-electric subsystem high-production cost benefits have been projected in this analysis. However, we do wish to emphasize that such a cost-reduction avenue is potentially available. The cost and efficiency benefits associated with electrolyzer subsystem improvements expected with time are included in Figure 15.

Conclusions

Hydropower technologies, both current and advanced, in both large and small scales, can be employed in viable solar/hydrogen production systems. However, the falling water resource is restricted in terms of siting options and total resource available (Appendix IV).

QUALITY

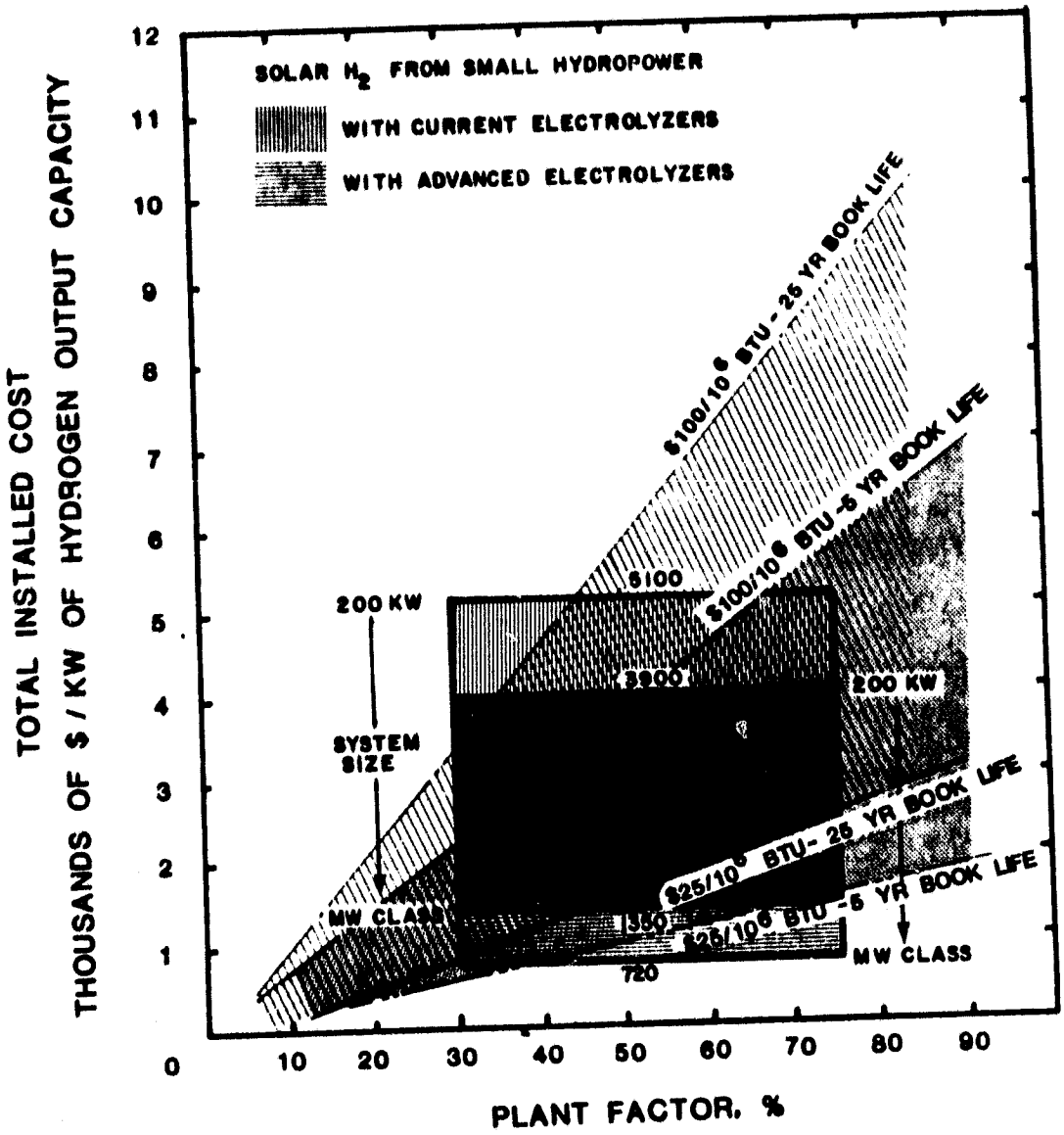

Figure 15. PRESENT AND PROJECTED SMALL HYDROPOWER SOLAR/HYDROGEN PLANT COST VS. PLANT FACTOR, PRODUCT COST, AND BOOK LIFE (1980 Dollars)

QUALITY

Section IV

THE HYDROGEN MARKET AND SOLAR/HYDROGEN SYSTEMS

This study has focused on those solar/hydrogen production technologies with the best chance of achieving a commercialized status within the next two decades. The cost of the hydrogen product produced by systems using the selected technologies can meet manufacturing cost goals, which range from $25/million Btu to $100/million Btu if these systems are operated as captive* systems. To this cost must be added the cost of delivery, and its profit, in order to determine the selling price to a potential customer if the systems were operated to supply merchant hydrogen.

Two questions remain to be answered. First, who are the customers who can afford to pay the calculated solar/hydrogen product prices? Second, what are the problems that must be overcome in commercializing the solar/hydrogen production technologies selected?

A. The Hydrogen Market (Appendix IV)

Figure 16 places the hydrogen market in context with the total U.S. energy requirements for 1978. Hydrogen is not currently used as a fuel in significant amounts. Rather, its predominant use is as a chemical feedstock or as a commodity gas. Taken in terms of energy content, the total U.S. hydrogen consumption amounts to about 0.8% of the U.S. annual energy consumption. Nearly 96% (95.8%) of this 0.8% is used for the production of ammonia and methanol and in the refining of fossil fuels; it is manufactured at the processing plant site, i.e., it is captive hydrogen. Around 89% of the remaining 4.2% is also generated and used at the same location, i.e., it is also captive hydrogen; the balance (about 0.5% of the total U.S. hydrogen consumption) is delivered and sold by industrial gas suppliers as merchant hydrogen. The sum of captive and merchant hydrogen used in areas other than ammonia production, methanol production, and the refining industries comprises the "small-user hydrogen market" (4.2% of the total U.S. hydrogen consumption).

The small-user hydrogen market is primarily comprised of chemical industry applications, the metals industry, fats and oils processing, the electronics industry, float glass manufacture, and the pharmaceutical industry. The present and projected consumption patterns of these industries between the present time and the year 2000 are presented in Figure 17. These uses are projected to expand and can offer a long-term commercialization opportunity for solar/hydrogen systems.

B. Who Can Afford To Pay The Price?

Today's small hydrogen user can obtain hydrogen by any of four options:

1. On-site steam reforming of natural gas or naphtha

* User owned and operated.

QUALITY

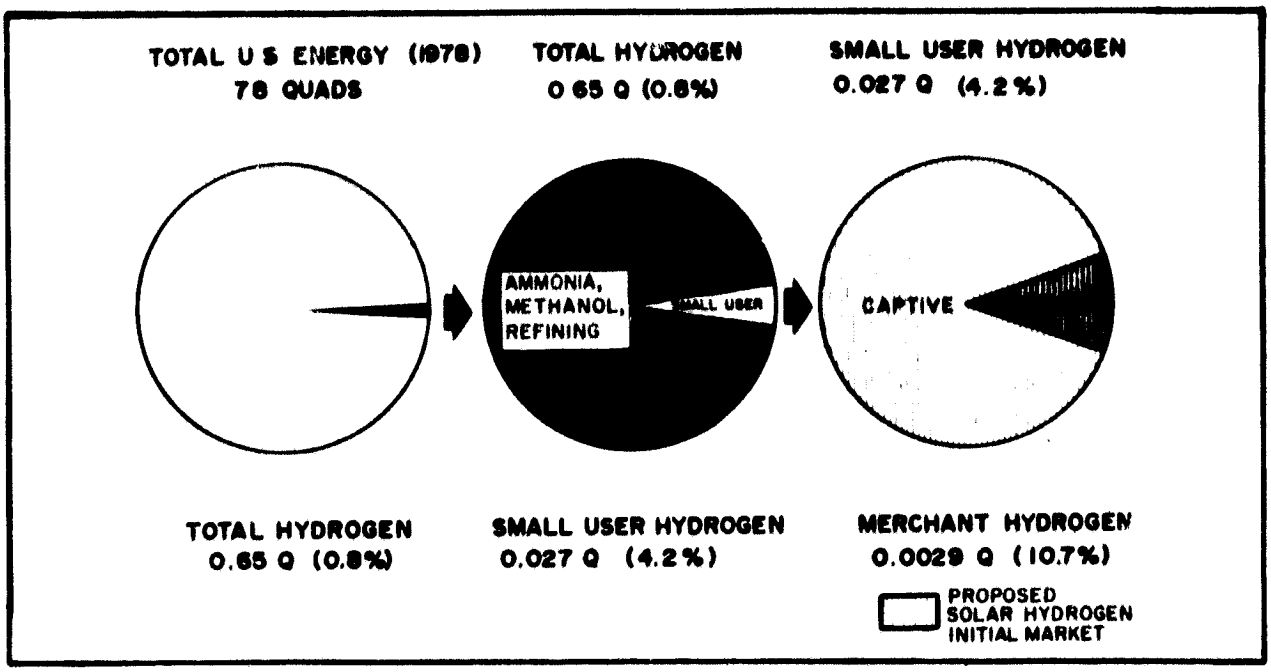

Figure 16. THE USE OF HYDROGEN IN THE U.S. IN CONTEXT WITH TOTAL U.S. ENERGY CONSUMPTION

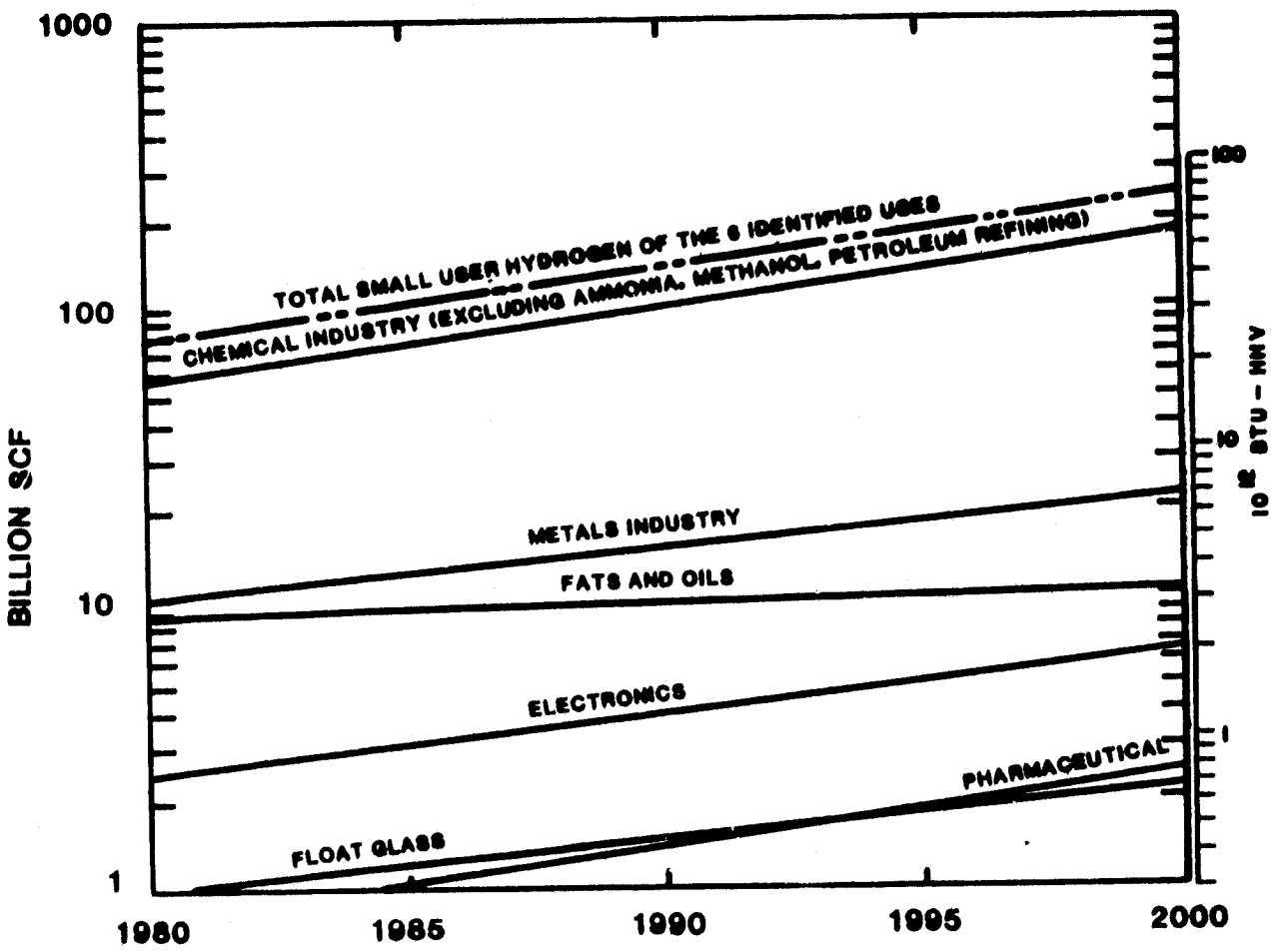

Figure 17. PROJECTED U.S. MARKET VOLUME FOR THE SIX IDENTIFIED MAJOR SMALL USER HYDROGEN MARKETS: 1980-2000 (Appendix IV)

QUALITY

2. Purchase from some nearby facility where it is available as a byproduct

3. Purchase from an industrial merchant gas company with delivery by truck

4. On-site electrolysis of water using grid power or on-site generated power.

Figure 18 shows small-user hydrogen costs as a function of daily demand. Table 1 adds further detail to the wide ranges of prices presently paid for hydrogen delivered to small users. Keeping in mind the prices for solar/hydrogen of $25/million Btu to $100/million Btu previously presented, it appears that there is a potential solar/hydrogen market now, and that it is one that could grow in the next two decades.

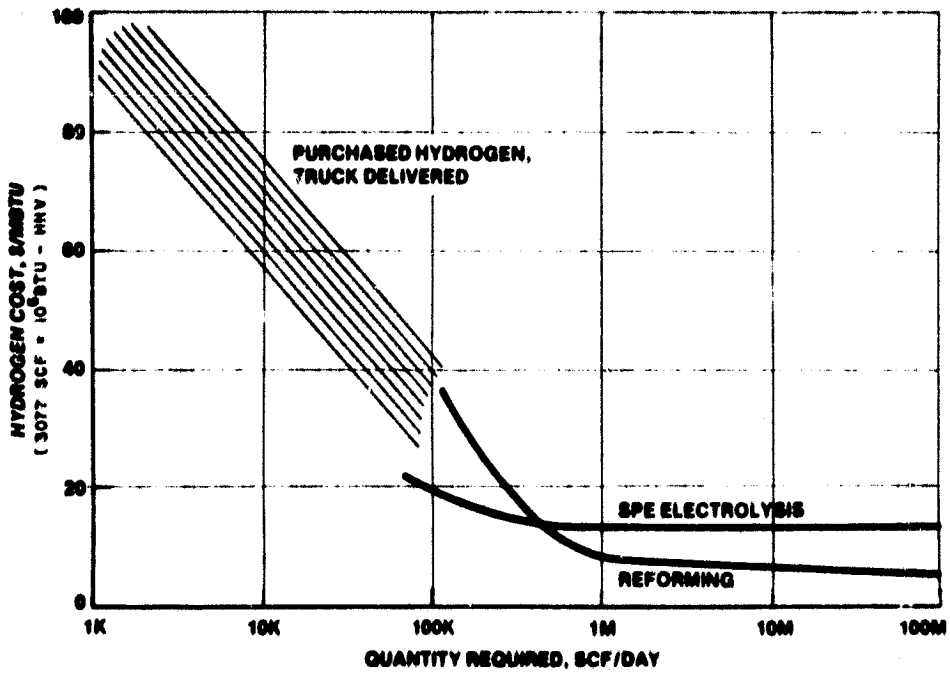

Figure 18. SMALL USER HYDROGEN COSTS VS. REQUIRED DELIVERY RATE (1980 Dollars) (Appendix IV) (SPE-Solid Polymer Electrolyzer)

However, for solar/hydrogen to be viable, site-specific characteristics such as the amount of solar energy available, flow rate, pressure, and purity requirements must be compatible with at least one of the candidate solar/hydrogen production systems' capabilities. Moreover, distances between the solar/hydrogen production facility and the use to be served must be short to minimize the transportation costs that must be added to the solar/hydrogen product cost in non-captive applications.

Illustrative of this last point, industrial gas companies in the United States view 100 miles as about the maximum economic distance for tube-trailer delivery of pressurized gaseous hydrogen. Beyond this, it is necessary to transport cryogenic liquid.

QUALITY

Table 1. ACTUAL MERCHANT HYDROGEN PRICES PAID BY CUSTOMERS (Appendix IV)

Individual Customer Demand (Million SCF/year)	Delivered Price of Hydrogen	
	1977 $/KSCF	1980 $/$10^6$ Btu
0.20	50.00-60.00	178.00-213.60
0.35	28.50	101.50
0.50	54.90	195.40
0.50	22.00	78.30
3.0	8.00	28.50
5.0	12.00	42.70
10.0	9.50	33.80
12.0	9.10	32.40
18.6	8.60	30.60
22.0	7.00	24.90
37.0	8.00	28.50
72.0	8.00	28.50
97.0	6.00	21.40
100.0	5.50-6.00	19.60-21.40
120.0	7.00	24.40
150.0	7.50-8.00	26.70-28.50
180.0	5.50-6.50	19.60-23.10
200.0	7.00-7.50	24.90-26.70

It is important here to note again that two factors have not been considered in this assessment effort. First, no credit has been assumed for the oxygen coproduct since the value of this oxygen is highly dependent upon site-specific considerations. Secondly, some solar energy conversion technologies, i.e., concentrating photovoltaic and solar thermal engine systems, could be applied in cogeneration designs where additional earning potential (or cost credits) could exist in the process heat byproduct. Again, opportunities to apply synergistic design approaches are site-specific; therefore, no meaningful hydrogen production financial analysis can be accomplished using some "ideal" situation where product credit is claimed for oxygen and process heat.

ORIGINAL PAGE IS OF POOR QUALITY

C. The Solar/Hydrogen Corner Of The Market -- Another Consideration

In numerous small-user markets, hydrogen is essential to the operation of the process. However, it often comprises a very small portion of the total product price. Thus, the user can afford to pay a high price because the cost of hydrogen does not drastically affect the cost of manufacture of his product; but, because it is essential, the user places a high premium on being assured of a reliable and predictable supply. Thus, solar/hydrogen systems might be especially competitive where they can provide the user with a more reliable and more predictable (in terms of both price and supply) supply of affordable hydrogen than can conventional sources. However, considerably less information exists on the reliability of solar/hydrogen systems than on the prices. Therefore, demonstration of reliable operation is important, and it can only be obtained by the operation of real systems.

D. Commercialization Issues (Appendix IV-B)

In the course of this assessment, the "commercializable" constraint was by far the most severe in terms of screening the candidate solar/hydrogen systems. Thus, an understanding of the total process--from first conception of an idea to commercializing it and finally to a commercialized status--is important.

It is significant to point out again that the solar/hydrogen systems judged to be commercializable by the year 2000, as discussed in this report, may in fact be many years away from a commercialized status. Numerous factors can delay the commercialization of new technologies; these factors as reported for the chemical industry are shown in Table 2.

Table 2. FACTORS CONTRIBUTING TO THE DELAY OF "FIRST REALIZATION" OF NEW TECHNOLOGIES IN THE CHEMICAL INDUSTRY (Appendix IV)

(1)	No Market or Need	37.5%
(2)	Potential Not Recognized by Management	29.2%
(3)	Undeveloped Technology	8.3%
(4)	Resistance to New Ideas	4.2%
(5)	Poor Co-operation or Communication	4.2%
(6)	Other	16.6%
(7)	Shortage of Resources	0.0%
	Total	100.0%

With regard to the single major cause of delay, the fact that no market or need for the technology exists (Table 2), we have addressed the market but not the need for solar/hydrogen production technology within this market. In fact, the market is presently served adequately by other supply methods, and solar/hydrogen can offer no major product improvement or cost reduction at the present time save, possibly, for the considerations mentioned under (C) above.

The factors relating to industrial management decision-making, and the execution of these decisions (in Table 2), comprise the second largest cause of delay. Here, it must be recognized that a proposition to invest in solar/hydrogen systems is extremely difficult to present to corporate-level personnel today because, even though the potential value of the system might be acknowledged, the time frame is beyond conventional corporate planning horizons.

QUALITY

Section V

CONCLUSIONS AND RECOMMENDATIONS

A. Major Conclusions

Solar/hydrogen systems could be operated on a commercial basis by some small users within the next two decades or shortly thereafter (Figure 19).*

In weighing the potential benefits against the risks involved, a company in the merchant hydrogen business, or a captive system owner, might decide to install a solar/hydrogen system in the near-term; however, the study team does not judge such a decision probable because it would mean that the case for solar/hydrogen had been successfully pursued with management; and this has not, in fact, been accomplished anywhere in the United States as yet, to the best of our knowledge.

Moreover, design, construction, and operation of solar/hydrogen systems require a practical knowledge of a rather wide range of technologies. While some supplier and small-user firms have knowledge of some of these technologies, none are knowledgeable in all of them. Thus, before the solar/hydrogen option can be considered by such firms, information on the requisite technologies must be brought together and evaluated in light of that company's specific operations and presented in a manner that is meaningful to that firm's management. Recognizing this problem, the DOE could provide the means for bringing practical knowledge of solar/hydrogen conversion technology, and related systems engineering, to management evaluation of these systems.

One approach--a cooperative approach to the development and demonstration of solar/hydrogen systems, which involves industrial firms working on a shared-risk basis with the DOE--might offer some hope of success. This approach, involving initial Government support in the form of system demonstration projects, has substantial precedents and is discussed further in Appendix V.

If the DOE chooses not to support such an effort, it is the study team's opinion that industry will not do so either within the next two decades. This opinion is based on our judgement of the nature of the basic business decision-making process as well as the presently perceived continued availability of fossil feedstocks for hydrogen production through 2000.

---

* The development and commercialization of solar/hydrogen systems for energy-related (as opposed to commodity hydrogen related) systems is a distinct possibility. It is generally recognized that hydrogen can offer technical advantages over electricity and heat, both presently involved in solar energy applications, as an energy storage form. Hydrogen as a transportation fuel is a case in point. However, it is not clear that hydrogen can offer similar economic advantages, and thus have a general place in the energy market. Because of this, the potential for solar/hydrogen energy system applications was not further treated in this assessment.

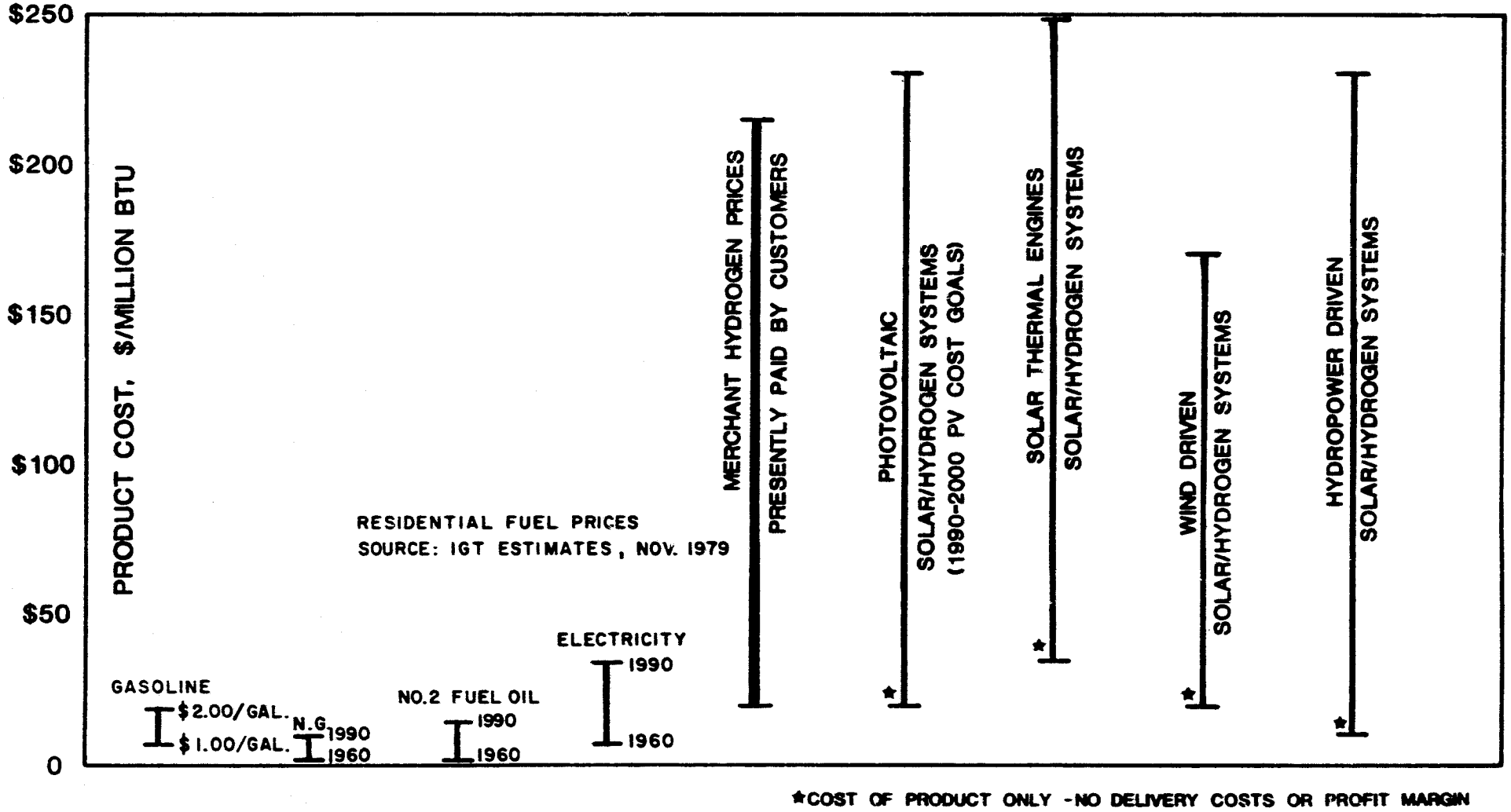

Figure 19. A COMPARISON OF FUEL PRICES AND MERCHANT HYDROGEN PRICES TO THE RANGE OF PROJECTED COSTS OF MANUFACTURE OF HYDROGEN FROM SOLAR ENERGY

Moreover, since time lags for the introduction of new technologies are often on the order of 20 years or more, near-term initiatives in solar/hydrogen development and demonstration are needed if these systems are to become commercialized in the early-2000 time frame.

B. Recommendations

The study team recommends the following to the Department of Energy:

1. That the results of this Solar/Hydrogen Systems Assessment be used to support presentations to those industrial firms most likely to benefit from the solar/hydrogen option.

2. That an effort be made, integrated with the recommended industrial liaison in (1) above, to develop cooperative participation in the development and demonstration of the four selected solar/hydrogen systems.

3. Contingent upon developing active participation by industrial firms, that site-specific system design and organization-specific economic analysis of selected solar/hydrogen systems be performed.*

4. Contingent upon the outcome of (3), that appropriate development and demonstration projects be defined and that a coordinated program based on joint Industry and Government support and participation be executed.

---

* These analyses should consider the product value of the hydrogen, oxygen and process heat to be produced, individually, and in combination.

TECHNICAL PAPERS AND PRESENTATIONS PRODUCED DURING THIS ASSESSMENT PROJECT:

The following technical papers and presentations were prepared by the Jet Propulsion Laboratory and Escher:Foster Technology Associates, Inc., under the JPL in-house effort and contracted Solar/Hydrogen Systems Assessment effort.

1. Hanson, J.A., "Concepts for Solar Production of Hydrogen," presented at the Institute of Gas Technology Symposium "Hydrogen for Energy Distribution," 24-28 July 1978, Chicago, Illinois (Proceedings).

2. Hanson, J.A. and Escher, W.J.D., "Toward the Renewables: A Natural Gas/Solar Energy Transition Strategy," presented at the 14th Intersociety Energy Conversion Engineering Conference, 5-10 August 1979, Boston, Massachusetts (Proceedings).

3. Hanson, J.A., Escher, W.J.D. and Foster, R.W., "Future Production of Hydrogen From Solar Energy and Water: A Summary and Assessment of U.S. Developments," presented at the International Symposium -- Hydrogen in Air Transportation, 11-14 September 1979, Stuttgart, Federal Republic of Germany (Proceedings).

4. Hanson, J.A., "Solar Hydrogen," presented at the Solar and Hydrogen Seminar/Workshop, presented by the Clean Fuel Institute et al., 6-8 January 1980, Riverside, California.

5. Escher, W.J.D., Foster, R.W. and Hanson, J.A., "Assessment of Solar/Hydrogen Systems," presented at the Department of Energy Chemical/Hydrogen Energy Systems Contractor Review, 13-19 November 1979, Reston, Virginia.

APPENDIXES

QUALITY

APPENDIX I

BACKGROUND AND RATIONALE FOR SOLAR/ HYDROGEN SYSTEMS

SOLAR ENERGY SYSTEMS

Introduction

This section provides a brief background on solar energy as it relates to the production and use of hydrogen as a fuel and as a commodity gas. Solar energy conversion technologies which are applicable to the production of hydrogen are treated more specifically in Volume II of this report.

Direct and Indirect Solar Energy Resources

Solar energy is available as direct radiation and in indirect forms such as wind energy and hydropower.

Direct specular or beam radiation that is received from the sun is perhaps the most apparent form to consider. This is the only form usable by concentrating (optical) solar energy conversion systems, e.g., central receiver or "power tower" systems.

Less obvious, but still a direct energy input form, is diffuse radiation. This form of solar energy varies depending on the air mass penetrated (a function of solar inclination from the zenith and altitude), atmospheric turpidity, water vapor, dust, and aerosol content. Flat-plate collectors and photovoltaic converters, among others, can utilize diffuse radiation.

Indirect solar energy forms relate to biological, atmospheric, oceanic, meteorological, and/or climatological aspects in which physical materials are affected by the input of solar energy. The result is chemical, kinetic and potential, and thermal energy available for conversion into useful work.

Examples of indirect solar energy forms are wind, falling water (providing hydropower), ocean waves, stored thermal energy (temperature differences with ocean depth), and biomass. Each of these can be tapped by special conversion systems, some of which go back into technological antiquity--for example, windmills and water turbines. Others, such as wave-power devices and ocean thermal

QUALITY

energy conversion (OTEC) systems, are in the research and development stage at the present time.

Both direct and indirect solar energy conversion systems can be used for the production of hydrogen. This prospect is covered in Volume II of this report. The present Volume I focuses on several candidate solar/hydrogen systems which are believed to offer commercialization potential by the year 2000.

Delivered Forms of Solar Energy Systems

Today, energy is produced, delivered, and used in three basic forms: as chemical energy (fuels), as electrical energy (electricity), and as thermal energy (heat). This is presented schematically in Figure I-1.

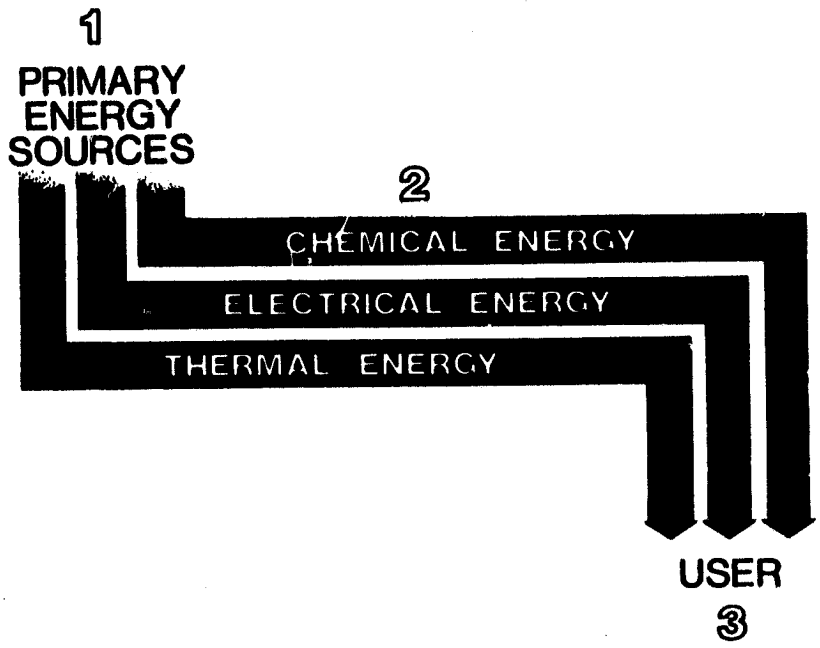

Figure I-1. ENERGY DELIVERY MODES

In proportion, fuel energy is the largest of the three forms, approximating 92% of the energy projected to be consumed in the United States. Electricity, usually requiring chemical fuels for its generation, is the next-largest contributor at about 8%. However, because of losses in energy conversion and delivery, the electrical utilities comprise about 22% of the national total energy needs. This represents a lumped generation, transmission, and distribu-

QUALITY

tion efficiency of approximately 30%.[1, 2]

Thermal energy, although in large demand as the actual end-form of energy usage (e.g., space-heating, industrial process heat and steam), is seldom delivered over any substantial distance. The combustion of fuels or electrical heating at the demand- or use-point yields the required heat. Improved energy-conversion efficiency can often be achieved through waste-heat utilization and "Total Energy" systems concepts.

Utility district heating, in association with electricity generation, is a commercially mature technology, but with limited application today. However, renewed interest in this approach is evident. Recent emphasis on cogeneration of electricity and process/space heat is aimed at increasing overall energy conversion efficiency. Solar/hydrogen production systems can be implemented as a part of cogeneration system designs.

A specific form of indirect solar energy of great importance is represented by fossil fuels. While fossil resources represent naturally processed solar energy initially converted via photosynthesis, this assessment views the prospects for technologically processed solar energy in the form of hydrogen. As will be discussed, solar/hydrogen can be directly used as a carrier of solar energy, or it can be used in the synthesis of alternative liquid and gaseous hydrocarbon fuels, e.g., synthetic fuels.

Today, solar energy conversion devices, both those in use and those under research and development, are directed to providing just two of these three energy forms: heat and electricity. (See Figure I-1.) The solar-production of chemical energy forms has not yet been pursued to the market stage, nor is this pursuit even well-initiated in terms of R&D.

The solar-production of hydrogen is basic to solar-derived chemical energy forms. This is because hydrogen is basic to all hydrocarbon fuels, as well as being a candidate future fuel in itself.

HYDROGEN ENERGY SYSTEMS

The focus of Volume I is upon those solar/hydrogen systems which are viewed as commercializable within the next two decades, i.e., by the year 2000.

It is the study team's belief that the markets to be served by the selected candidate solar/hydrogen systems are less likely to be for energy (fuel) applications than those requiring hydrogen as a chemical commodity. This use com-

prises the major portion of the hydrogen market today, and this market is projected to expand substantially over the next two decades.

Beyond this 2000 time-horizon and/or if "extraordinary" programs to develop hydrogen-energy systems are pursued earlier, energy applications might then be of great potential significance.

The emphasis of Volume I is on non-energy uses of hydrogen, together with special, small-scale energy use possibilities. For completeness, this Appendix addresses the concept of large-scale hydrogen energy systems as well.

Background and Orientation

Over the past decade, a new concept for an overall energy system based on hydrogen has been proposed and is under active consideration by a number of researchers in the world energy community. Presented initially as the "Hydrogen Economy"[3, 4], and now known more generally as the Hydrogen Energy System concept, this scheme envisions hydrogen produced from water as a universal "energy carrier." As such, hydrogen is recognized to be a secondary energy form, just as electricity is. It is not a new energy source.

A primary energy source is necessary for producing hydrogen, just as fossil and, to a far lesser extent today, nuclear fuel, is required to generate electricity. This study is concerned with those unique hydrogen production possibilities in which the primary energy source is the sun. The purpose of this Appendix is to provide background on the hydrogen energy system, other hydrogen applications, and the general status of hydrogen-related efforts today. This is followed by an expanded discussion of non-energy hydrogen applications, the emphasis of this volume.

The Hydrogen Energy System Concept

The hydrogen energy system concept is shown in general form in Figure I-2. It is comprised of three steps:

1. Production--Production of hydrogen involves the use of a primary energy resource to operate a process capable of producing hydrogen with water as the basic "feedstock." Usually oxygen, the other elemental constituent of water, is also produced as a coproduct.

2. Delivery--The delivery step is nominally subdivided into: 2a - transport (or transmission), 2b - storage, and 2c - distribution. For each of these substeps, several technical alternatives are available. For example, the hydrogen transport (long distance) and distribution (local) function can

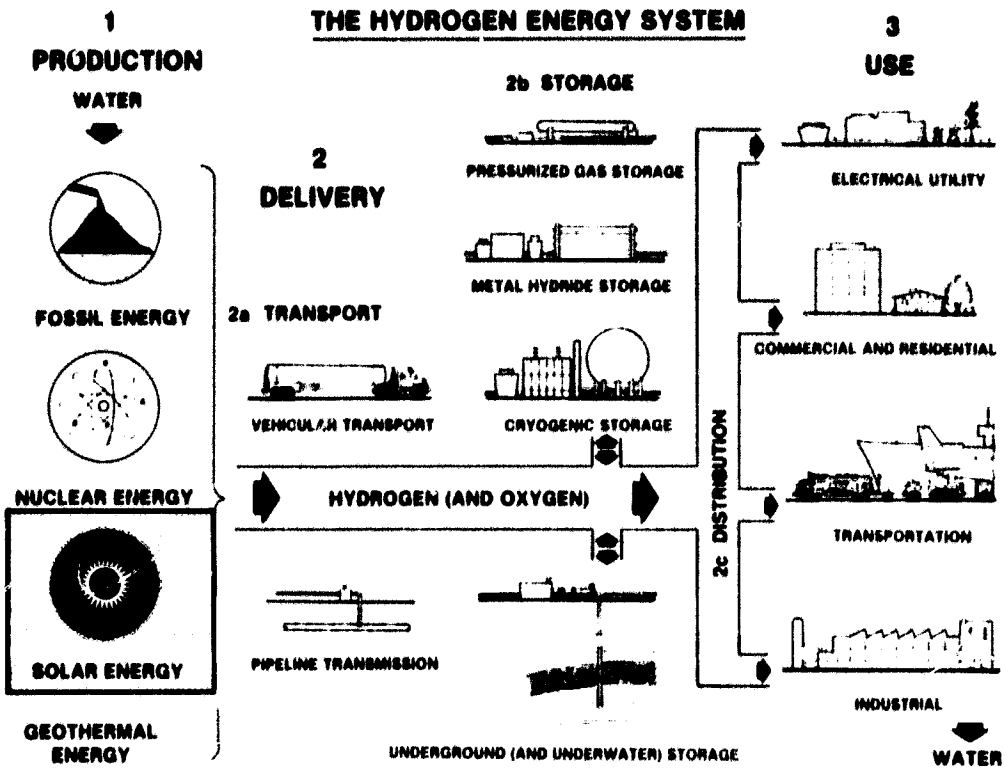

Figure I-2. THE HYDROGEN ENERGY SYSTEM CONCEPT

be handled by either pipeline or vehicle carrier means. Similarly, hydrogen storage approaches range from industrially established pressurized gas and cryogenic liquid storage techniques to projected metal hydride and underground storage concepts.

3. Use--The conventional use-sector categories, as shown in the diagram, are: electrical utility, commercial and residential, transportation, and industrial.

It should be stressed that the components and arrangements presented in Figure I-2 are highly generalized. Most of the technical options from which actual systems of interest might be ultimately synthesized are represented.

Concerning the physical scale of the system, an inference might be drawn that only large-scale central production facilities tied to large-capacity, long-distance transmission systems, major storage facilities, etc., are within the bounds of the concept. Such a restrictive interpretation is not meant. Small-scale systems are also projected to be important since nearer-term hydrogen

energy systems are likely to be locally, community, or regionally based. In such systems, distances between production and using systems could be of the order of meters, rather than tens or hundreds of kilometers. For instance, complete solar/hydrogen systems can be envisioned as being implemented on a single-residence basis.

The operation of the system is proposed to be as follows:

1. Primary energy is used to produce hydrogen (and usually oxygen) from water through appropriate "water splitting" processes.

2. Hydrogen (and possibly coproduct oxygen) is transported to distribution points.

3. Hydrogen storage capability, as noted, can be transport/transmission-step associated or distribution-step related.

4. Distribution of hydrogen to the user and, more specifically, to actual consuming devices and systems (which also might integrate storage capability), completes the delivery step.

5. Hydrogen end-use for the intended purpose at hand, be it as a chemical feedstock, or as a fuel/energy form, is the final step. Where hydrogen is combusted with oxygen, water is formed in the same amount as used to produce that hydrogen (i.e., the original feedstock is not permanently "used up" but can be returned to the environment).

Indirect Uses of Hydrogen in Energy Applications

Having emphasized the direct delivery and use of hydrogen in the discussion above, possibilities for its intermediate use should be highlighted as well. One of these is the use of hydrogen energy for electricity generation.* A second use is found in hydrogen's potential role in the production of alternative, non-petroleum fuels, e.g., synthetic hydrocarbon fuels, or "synfuels".

As illustrated in Figure I-3, substantial amounts of hydrogen are required for the upgrading of coal and kerogen (the hydrocarbon material of oil shale) for the production of liquid and gaseous fuel forms ranging from "syncrudes" to substitute natural gas (SNG). On one hand, this involves adding hydrogen chemically--hydrogenation--to these low-hydrogen content carbonaceous starting materials to increase their hydrogen/carbon ratio to that of a refinable crude.

On the other hand, hydrogen is also a vital treating material for the removal of unwanted constituents, such as sulfur and nitrogen. A typical upgrading hydrogen requirement for both hydrogenation and clean-up in producing

* As reflected in Figure I-2 (upper right-hand corner)

a liquid product is 2 to 3 MSCF per barrel of product. In energy terms, this means that the order of 15% of the finished synfuel energy is required to be added in the form of supplied hydrogen for upgrading. Additional hydrogen is used in refining.*

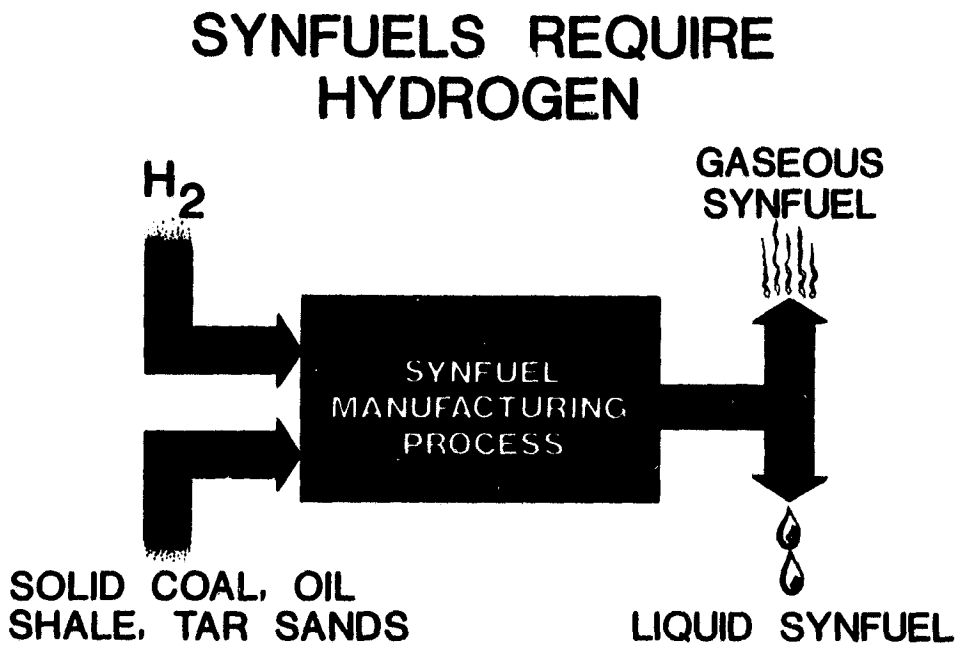

Figure I-3. FUNDAMENTAL ROLE OF HYDROGEN IN SYNFUELS PRODUCTION

Conventionally, this hydrogen is produced on-site, using the raw feedstock or a side-steam product with water in a gasification process. Incremental capital, operating, and feedstock costs are incurred to achieve this captive hydrogen production capability.

Alternatively, were hydrogen to be available from an external source, (e.g., via a gas pipeline) at a competitive cost, it could contribute to efficient synfuels production. Or, if hydrogen were locally produced from sources other than the basic carbonaceous raw materials, it, and very possibly, the coproduced oxygen, could be utilized in synfuels production.

---

* Such hydrogen use is routine in oil refineries at present, e.g., hydrotreating, a specific example being hydrodesulfurization.

In summary, hydrogen produced from non-fossil, primary energy resources and water, and delivered to electrical generating and synfuels production facilities, could be used to produce these energy forms. This would constitute an intermediate energy use of hydrogen, a recognized facet of the general hydrogen energy system concept.

Status of Hydrogen Energy Systems

The hydrogen energy system concept briefly described is not in existence. Outside of the Space Program and certain specialized but limited industrial applications, hydrogen is not presently used as a fuel. Rather, the principal use of hydrogen today is as a chemical intermediary in the industrial chemicals business and in oil refineries.[5, 6]

In a number of industries, where hydrogen is available as an "off gas" from certain processes, usually at low pressure and in impure form, it is used as a fuel for local process heat, or even wasted by flaring. The total amount consumed in this manner is negligible.

Research and development activities specifically directed toward energy uses of hydrogen are at the beginning stage. Following the early studies and assessment efforts (e.g., see References 3-9), a modest level of support for hydrogen energy systems is underway, principally under the U.S. Department of Energy (DOE).* At present, work on hydrogen is spread throughout several of the DOE's program areas.

Focus of the hydrogen-energy aspects (aside from its vital role as an intermediary in synthetic fuels production) is in the Division of Energy Storage Systems (STOR), where a general energy R&D effort is underway (see References 8 and 9), and in the Office of Transportation Programs (OTP), where hydrogen is included as an "advanced fuel" candidate under the Alternative Fuels Utilization Program (AFUP; see Reference 10). Presently, funding within the DOE is of the order of $5 million/year for STOR and OTP. A roughly equivalent-sized effort on hydrogen production for synfuels applications is underway in the Fossil Energy organization of DOE.

Also, the National Aeronautics and Space Administration (NASA) is funding specific hydrogen-energy R&D. Its principal program, the Space Shuttle development, is predicated on hydrogen as its fuel. Still in the initial assessment

---

*This assessment is supported under a DOE activity.

phase, NASA and other organizations worldwide are also pursuing liquid hydrogen as a candidate future aircraft fuel (see e.g., Reference 11).

It is clear that hydrogen energy systems are at the early assessment and initial R&D stage at this time. Other than the space program's established use of the hydrogen-oxygen rocket propellant combination, no significant energy (fuel) use of hydrogen is being made today. The DOE is supporting a limited level of research and development of applicable technologies under its fossil energy, energy storage systems, and transportation activities.

HYDROGEN CHEMICAL AND FEEDSTOCK (Non-Energy) APPLICATIONS

Markets judged most likely to use solar-produced hydrogen up to the year 2000 are those requiring commodity hydrogen for various chemical uses. Of particular interest is the "small user" class of applications, the economics for which have been treated by Corneil et al.[5] As noted by Corneil, "U.S. consumption of small user hydrogen now totals about 250 million SCF/day (0.03 quad/year); about 3% of the total industrial hydrogen including that used in oil refining, ammonia synthesis, and methanol manufacturing."

At the present time, this market is served by both merchant and captive hydrogen. Industrial gas companies routinely deliver hydrogen in quantities ranging from a few standard pressurized gas cylinders (capacities of several hundred SCF, or about one pound of hydrogen) to trailer loads of liquid hydrogen (up to 13,000 gallons each, about 4 tons).

On-site production of (captive) hydrogen is the alternative approach selected by many small-quantity hydrogen users. Water electrolysis and the steam reforming of natural gas or light hydrocarbon liquids (e.g., naphtha) are both employed for on-site hydrogen supplies, with the latter predominant at present in the U.S. Selection of the specific method pivots on those technical and economic requirements and constraints unique to each hydrogen user, and the relative availability and cost of electricity or the requisite hydrocarbon feedstock material.

Commodity Market Penetration Possibilities

The specifics of the small user market demand, and the controlling economic and operational considerations necessary for user decision-making in choosing a source of hydrogen, are discussed in some detail in References 5 and 6. A brief overview follows.

Small user hydrogen prices vary as a function of the amount of hydrogen used. There is a steep rise in the price paid by the user as the use-rate decreases. These relatively high prices are affordable because either, 1) the hydrogen costs are a relatively small part of the total product or services cost involved, or 2) hydrogen is vital to the operation of the user's business operations, or both.

If solar/hydrogen systems were cost-competitive with the established sources of supply of small-user hydrogen, as well as being able to meet the user's technical/operational requirements (reliability, schedule, purity, etc.), investment in an appropriate on-site solar/hydrogen system would be open to consideration if, in fact, such systems were available.

Alternatively, industrial gas hydrogen suppliers might determine that, for certain markets served, an on-site customer-matched solar/hydrogen production system might be preferable to the customary supply methods. Finally, an industrial gas supplier might elect to have a central solar/hydrogen facility for its main supply purposes.

One important issue, in this respect, is the relatively high cost of hydrogen transport from source to market. Gaseous tube-trailer transport provides a very low payload mass-fraction (usually less than 1%), which limits the suppliers profitable operating radius to about 200 miles. On the other hand, liquid hydrogen transport, though demonstrated over continental distances, incurs an expensive liquefaction step and costly, sophisticated transport and handling equipment.

If a remote market is to be served by an industrial gas company far removed from its source of supply, and if adequate solar energy resources are available at/near the market, the company might elect to establish a new solar/hydrogen "plant" to best serve the market That plant could be sited in the proximity of the customer, or centrally with local distribution to multiple users.

RATIONALE FOR EARLY COMMERCIALIZATION CANDIDATES (by 2000)

Over the next two decades, it is not expected that solar-produced hydrogen will be able to compete on a cost basis with conventional fossil fuels or with other alternative fuels that may be available. Further, hydrogen produced from fossil fuels, e.g., by natural gas steam reforming, is projected to be available in the year 2000 at costs of as low as $7.50/million Btu (1980 dollars), well below the costs associated with any identified solar/hydrogen production method examined in this assessment.

If solar/hydrogen systems are to be able to achieve an onset-of-commercialization status before the year 2000, markets capable of paying prices for hydrogen well above fuel gas costs must be identified. The question resulting from this consideration, then, is: Is there an identifiable market now, or in the near future, in which: 1) hydrogen prices well above fuel prices exist, and 2) appropriate solar/hydrogen systems can effectively compete with alternative sources of hydrogen supply?

The provisional answer to this question is "yes": the small user hydrogen market. (See Appendix IV-A.) Characteristically, this market involves commodity use of hydrogen, rather than energy use.

Illustrating the possibilities, Appendix IV-A relates small-user hydrogen price trends with the amount of hydrogen used by an individual consumer. For a range of hydrogen usage rates, the prices paid are substantially higher than the costs of hydrogen projected for several candidate solar/hydrogen systems examined in this study.

This being the case, there is a potential opportunity for commercializing one or more of these candidate systems.

SUMMARY: BACKGROUND AND RATIONALE

Initial solar/hydrogen production is believed most likely to be marketed as a commodity material for chemical purposes. Further, in view of today's hydrogen pricing structure and the relatively high cost of solar/hydrogen, it is likely to be the small user market which will be initially penetrated.

Based on these theses, two alternative approaches for effecting small-user commodity hydrogen market penetration, both captive and merchant, become evident:

1. The user can consider installing a solar/hydrogen system on-site.
2. An industrial gas supplier can consider setting up solar/hydrogen supply facilities to serve one or more hydrogen customers in its vicinity, thus reducing the characteristic high over-the-road transportation cost.

References Cited

1. Loebl, A.S., et al., "Transportation Energy Conservation Data Book," Oak Ridge National Laboratory Report ORNL-5198, October 1976 (page 60).

2. Smock, R., "The Top 100 Electric Utilities 1977 Operating Performance," Electric Light and Power 56, No. 8, 7-11 (1978) August.

3. Gregory, D.P., et al., "A Hydrogen Energy System," Institute of Gas Technology Report for the American Gas Association, Catalog No. L21173, August 1972.

4. Dickson, E.M., and Smulyan, M.H., "The Hydrogen Economy, A Preliminary Technology Assessment," Stanford Research Institute Final Report for the National Science Foundation under Grant No. ERP-73-02706, February 1976.

5. Corneil, H.G., Heinzelmann, F.J., and Nicholson, E.W.S., "Economics of Small User Hydrogen," Hydrogen for Energy Distribution, Symposium Papers, Institute of Gas Technology, Chicago, IL, January 1979.

6. Fein, E., et al., "The Market Potential for Electrolytic Hydrogen," The Futures Group, Inc., report for the Electric Power Research Institute, Final Report No. EM-1154 (Research Project 1086-4), August 1979.

7. Kelley, J.H. and Laumann, E.A., "Hydrogen Tomorrow, Demands and Technology Requirements," Report of the NASA Hydrogen Energy Systems Technology Study, Jet Propulsion Laboratory Report No. JPL 5040-1, December 1975.

8. Anon., Preprints of the DOE Chemical Energy Storage and Hydrogen Energy Systems Contracts Review, U.S. Department of Energy, 16-17 November 1977, Hunt Valley, MD.

9. Anon., Proceedings of the DOE Chemical/Hydrogen Energy Systems Contractor Review, U.S. Department of Energy, 27-30 November 1978, Washington, DC.

10. Anon., "Project Planning Document, Highway Vehicle Alternative Fuels Utilization Program (AFUP)," U.S. Department of Energy, Report No. DOE/CS-0093, July 1979.

11. Peschka, W., Ed., "Hydrogen in Air Transportation," Proceedings of International Symposium, DFVLR, Stuttgart, Federal Republic of Germany, 11-14 September 1979.

12. Bockris, J. O'M., Energy, The Solar-Hydrogen Alternative. John Wiley and Sons, New York-Toronto, 1975.

13. Ohta, T., Ed., Solar-Hydrogen Energy Systems. Pergamon Press, Oxford, 1979.

APPENDIX II

SOLAR/HYDROGEN TECHNOLOGIES FOR THE "BEYOND 2000" TIME FRAME

General Discussion

The major portion of this volume treats those solar/hydrogen production technologies and systems selected as candidates for commercialization within the next two decades, i.e., by 2000. This appendix reviews those additional technologies that might find commercial application in the post 2000 time frame.

Direct Solar Energy Conversion Processes

These processes consist of three subcategories (photo-electric, electric, and thermal) and seven specific primary processes, as shown in Figure II-1.

a. Photo-Electric Processes

This subcategory includes three specific solar energy conversion processes: biophotolysis, photocatalysis, and photo-electrolysis. The commonalities shared by these processes are: 1) in each process, photons initiate electrochemical reactions which result in the production of hydrogen and oxygen and 2) each process is in the research stage with respect to efficient and economical hydrogen production.

(1) Biophotolysis

Biophotolysis is a process which involves the direct photo-production of hydrogen by biological systems using water as an electron source. Both *in vivo* (living systems) and *in vitro* (artificial systems containing subcellular components) hydrogen-producing systems are under investigation. Considerable interest has developed in constructing hydrogen-producing systems with isolated biological components (*in vitro*). This approach promises higher conversion efficiency than *in vivo* systems but requires the solution of a number of difficult technical problems, including: 1) stabilization of biological components, 2) physical separation of oxygen and hydrogen producing activities, 3) simplification of the photosynthetic system, and 4) developing systems capable of utilizing a wider portion of the incident solar spectrum.

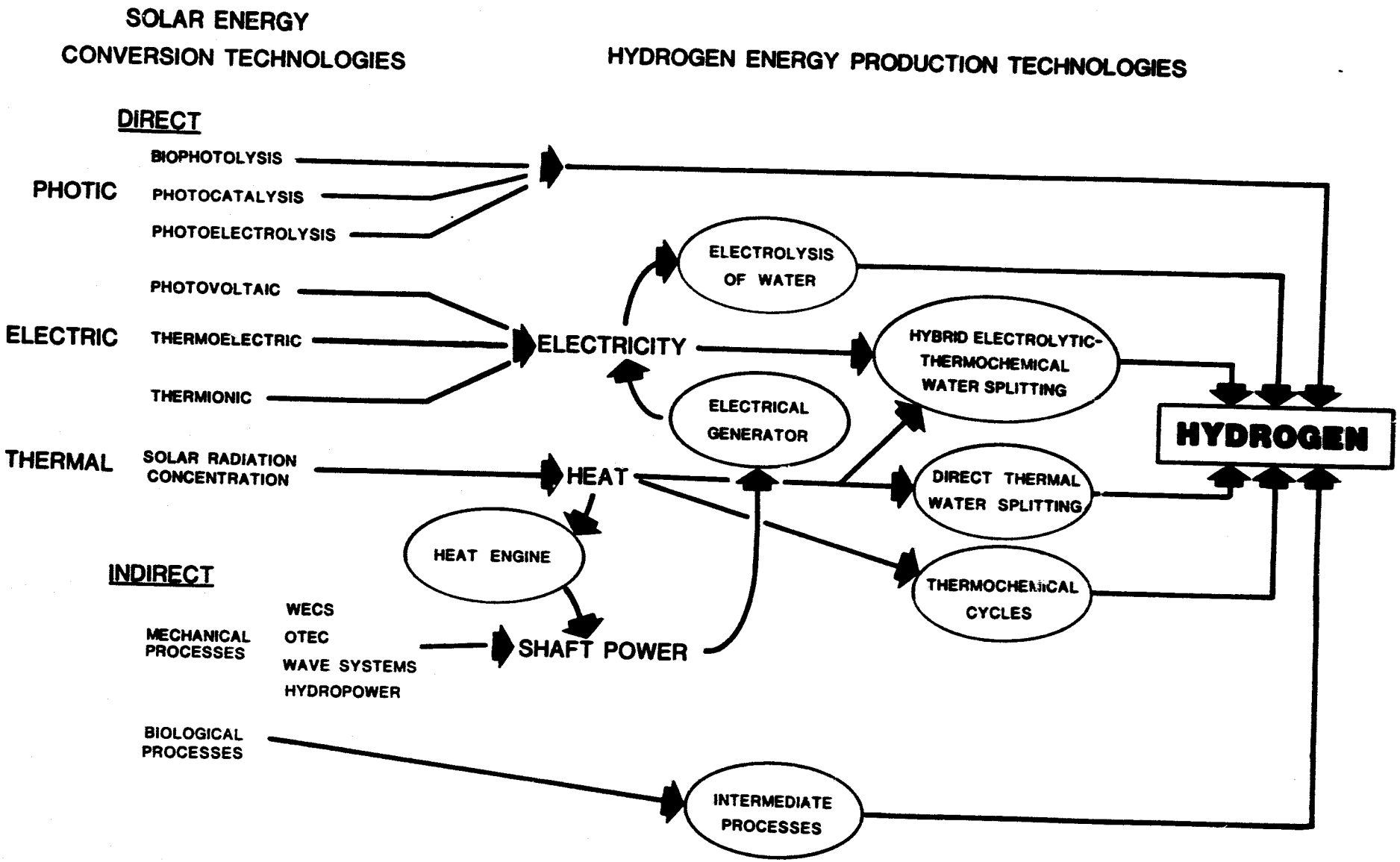

Figure II-1. AN ILLUSTRATION OF THE BASIC INTERRELATIONSHIPS BETWEEN CLASSES OF SOLAR ENERGY CONVERSION TECHNOLOGIES AND HYDROGEN PRODUCTION TECHNOLOGIES.

These activities are research-oriented, and practical *in vitro* systems are not likely to be forthcoming in the immediate future. This technological pathway must, for now, be assessed as one which requires further research before commercial-scale application can be considered.

(2) Photocatalysis

The challenge in photocatalytic processes is to add recyclable catalytic material to water that will absorb solar light spectra and deliver the absorbed energy in a manner that will result in a hydrogen and oxygen producing reactions without consumption of the catalytic material. Current approaches involve near simultaneous photocatalytic oxidation and reduction reactions that yield oxygen and hydrogen followed by a dark reaction in which the reagents recombine to their original form. Candidate reactions currently under study require the use of relatively rare and expensive materials, e.g., rhodium complexes. Cycles based on more abundant materials must be developed before this technology can be considered as a potential source of hydrogen.

(3) Photoelectrolysis

Photoelectrolysis can be viewed as a fluid analog of a photovoltaic cell which is combined with an electrolytic cell. Theoretical conversion efficiencies of 45% have been calculated. The highest experimental conversion efficiencies (10% to 11%) have been achieved with monochromatic light. The best total solar spectral efficiency attained thus far is about 2% or 3%. Aside from these low demonstrated efficiencies, the major problem with these systems is that the electrode materials are thermodynamically unstable when the cell is operating. Corrosion of electrodes with a resulting drop in conversion efficiency is a major problem. This general field is relatively unexplored, and rapid advances in the technologies could be possible. Nevertheless, photoelectrolysis cannot currently be included among the contenders for near-term, commercial hydrogen production.

b. Electric Processes

The term "electric processes" is employed here to encompass photovoltaics (including concentrating hybrid photovoltaic concepts), thermionic technologies, and solar thermo-electric phenomena. The latter is distinct from the solar thermal-to-heat-engine-to-electrical generation concept in that electricity is

produced directly.

(1) Photovoltaic Systems

Photovoltaic technology is a selected candidate for near-term commercialization.

(2) Thermoelectric Systems

The generation of voltage between the junctions of dissimilar metals when a temperature difference exists between the two (the Seebeck effect) is the basis of operation of thermocouple/thermopile systems. This effect has found practical application, with low-energy conversion efficiency, in spacecraft power-supply systems which use radioisotopes as heat sources. While significant advances have been made in this technology, low conversion efficiency remains the major barrier to its application for solar energy conversion devices. Moreover, solar thermoelectric technology is not being actively developed in the United States.

(3) Thermionic Processes

The unique features and characteristics of solar thermionic power include relatively high theorectical efficiencies, on the order of 20%, and the potential for operating these systems at high temperature. High temperature operation of solar thermionic systems, like concentrating photovoltaic systems, offers the opportunity to use the rejected heat to drive shaftpower devices in bottoming cycles. At second glance, however, thermionic power generation faces several difficult technical challenges.

With presently known materials, the optimum hot-to-cold junction temperature ratio is about 2. Today's best materials can produce this ratio, but the temperature of the total system at which this ratio is produced is too low to permit the cost-effective operation of inexpensive shaftpower devices to support a bottoming cycle.

Presently, the major limitation is that, with higher temperatures, the cold electrode becomes an electron emitter and acts to reduce the potential available from the junction. New developments in materials are required. We do not consider thermionic technology to be a likely candidate for commercialization of solar/hydrogen production in the United States within the next two decades.

c. Thermal Processes

(1) Solar Thermal Heat-Engine Processes

Solar thermal heat-engine systems are a selected candidate technology for near-term commercialization.

(2) Direct Thermal Water Splitting

At 3000°K and one atmosphere pressure, approximately 14% of water vapor is dissociated. This fraction increases with decreasing pressure and increasing temperature. A number of theoretical treatments of this approach for hydrogen production have been performed. Even if the very limited laboratory work on this method indicated basic technical feasibility, ultimate commercial attractiveness still lies far in the future. Materials engineering will pose basic challenges as will methods for obtaining acceptable system net energy efficiencies considering the very high temperatures that must be maintained. Additionally, there is a critical problem of separating the product hydrogen and oxygen. At this time, direct thermal water splitting must be considered to be theoretical, long-range possibility for commercial hydrogen production.

(3) Solar Thermochemical and Hybrid Electrolytic-Thermochemical Production of Hydrogen

A large number of families of closed-cycle reactions that result in the dissociation of water into hydrogen and oxygen while preserving the intermediate reagents have been proposed and studied. Some investigators consider commercial thermochemical hydrogen production to be a real possibility if a continuous high-temperature (700 to 1000°C) heat source is available. However, barring major advances in high-temperature thermal energy storage, solar energy hardly represents an attractive continuous thermal energy source. For all of the foregoing reasons, as well as for several more specific considerations not mentioned here, the commercial potential of solar-driven thermochemical and hybrid electrolytic-thermochemical approaches to hydrogen production appears remote at this time. Specifically, the following two technical milestones must be achieved before serious consideration can be given to this approach: 1) commercially acceptable reaction cycles are demonstrated beyond reasonable doubt, and 2) a commercially viable, high-temperature, thermal energy storage technology that can compensate for intermittency of the primary solar energy resource is demonstrated.

QUALITY

Indirect Solar Energy Conversion Processes

Indirect solar energy processes fall into three major classes: 1) thermal, as manifested in the ocean thermal gradient, 2) kinetic, as manifested in winds, waves, and falling water sites, and 3) biological, as manifested in the production of biomass. However, the related primary conversion technologies fall into only two subcategories in the categorization system employed here: 1) mechanical, combining thermal and kinetic, and 2) biological.

a. Mechanical Solar Conversion Technologies

To be examined briefly under this subcategory are wind energy conversion systems, ocean thermal energy conversion, ocean wave power, and hydropower.

(1) Wind Energy Conversion Systems (WECS)

Wind energy conversion systems are a selected candidate for near-term commercialization.

(2) Ocean Thermal Energy Conversion (OTEC)

In the tropical oceans, the temperature gradient between the warm surface water and the cold water that is 500 to 600 meters below the surface is approximately 40°F. This ΔT gives a theoretical Carnot efficiency of approximately 7%. This oceanic temperature gradient represents a huge solar energy resource if it can be tapped. At present, a closed Rankine cycle employing ammonia as the working fluid is the energy conversion technology of choice. Open-cycle systems have been investigated, as well as several exotic approaches to vaporization and hydraulic-head production. The requirements for pumping huge volumes of water, accommodating pressure drops within the system and coping with other parasitic losses result in the estimates of practical system efficiencies for electricity production being no more than 1% or 2%. In spite of OTEC's low-net energy prospects, the U.S. Department of Energy is actively supporting OTEC component and subsystem developments with about $40 million for Fiscal Year 1980. The first subsystems test of heat exchangers and cold water pumping aboard a converted ship hull called "OTEC-1," sized for one megawatt electrical production are scheduled for mid-1980. If OTEC-1 and subsequent small-scale, complete system tests are successful, it is possible that commercial-sized OTEC systems might be developed in the 1990's. There are, of course, numerous problems which might delay or preclude this supposition.

QUALITY

Since OTEC is obviously site-specific to deep ocean water locations, it is not broadly applicable to the continental United States in terms of siting. It is mainly for this reason that OTEC is not a selected system in this study.

(3) Ocean Wave Power

Outside of low-level assessments being conducted in a multi-national study effort, ocean wave power, as a renewable energy resource, is not being seriously pursued in the United States.

(4) Hydropower

Hydropower is a selected candidate technology for near-term commercialization.

b. Biological Conversion Technologies

Concepts for producing hydrocarbon energy forms from biomass are many and varied. Primary biomass feedstocks span the spectrum from urban and animal wastes through a variety of forestry, agricultural, and urban wastes, to a variety of plant grow-out options from unicellular algaes, to grasses, to silviculture, to massive at-sea farms of the giant brown kelp, *Macrocystus pyrifera*. Authoritative estimates of the potential of biomass to supply U.S. energy needs range from a few percent to U.S. total requirements depending upon the assumptions employed. Also, depending on the type of feedstock available, both biochemical and thermochemical means of converting feedstocks to liquid and gaseous hydrocarbon fuels are possible, e.g., fermentation and gasification.

However, the authors do not consider biomass feedstocks to be viable candidates for commercial hydrogen production within the foreseeable future. Although it certainly is technically feasible to derive hydrogen from cellulosic feedstocks through thermochemical processes, the following arguments are offered against doing so on a commercial scale: first, the net energy efficiency of the process chain which stretches from biomass production to hydrogen delivery is very low, less than 1%; second, processes with very low net energy efficiencies invariably will result in very expensive final products; third, compared with common hydrocarbon fuels, hydrogen is relatively difficult, hence, expensive to store and transport; and fourth and most significant, common hydrocarbon fuels can be derived from biomass feedstocks at higher net energy efficiencies and lower costs, in general, than can hydrogen. Therefore, there appear to be few, if any, convincing technical or economic arguments for

large-scale, commercial production of hydrogen from biomass feedstocks. However, it is recognized that certain unusual, and probably localized, economic and institutional conditions could constitute exceptions to this general statement. Nonetheless, though technically feasible, biomass-produced hydrogen is not selected as a candidate for near-term commercialization of solar/hydrogen production processes.

APPENDIX III

DESIGN CONSIDERATIONS AND COSTING ANALYSES - SELECTED SOLAR HYDROGEN SYSTEMS

General

This Appendix presents design and economic characterizations of those solar/hydrogen systems selected in accord with the guidelines stipulated for the assessment.

A technical characterization of each selected system is presented on a block-diagram level and relevant systems engineering aspects discussed.

Following this, the selected systems are characterized from an economic standpoint. This is done in context with a simplified solar/hydrogen production facility cost model for a range of facility book-life assumptions covering both industrial and utility financing. Costs ranges of hydrogen products are presented for the selected systems as a function of installed capital costs and plant factors. The time-period considered for cost estimation is 1980-2000. (Costs are presented in 1980 dollars.)

A. TECHNICAL CHARACTERIZATION OF SELECTED SYSTEMS

1. REVIEW OF THE SELECTED SECTS and HEPTS (See Volume II for details)

a. General

Based on the selection methodology and criteria discussed in Section II, four solar energy conversion technologies (SECT) and one hydrogen energy production technology (HEPT) have been selected for analysis. These systems qualify for selection in that they appear to be commercializable by 2000 through essentially conventional business practices operating under normal market forces. Further, no extraordinary Government funding would appear to be necessary, nor would technological breakthroughs be required. Demonstration project support would appear to be desirable and appropriate as will be discussed in Appendix IV.

These selected candidates are -

- SECT:
  1. Photovoltaic Conversion
  2. Solar Thermal Heat Engine Conversion
  3. Wind Energy Conversion
  4. Small Hydropower

- HEPT: Water Electrolysis.

b. Selected Solar Energy Conversion Technologies (SECTs)

(1) Photovoltaic Conversion

A Photovoltaic cell is generally in the form of a solid-state diode which has been made from various semiconductor materials. The preponderance of U.S. experience is with silicon cells which have been in use since 1955 when Bell Telephone Laboratories successfully powered telephone amplifiers in field tests. Various other applications have been demonstrated, but these have been of a limited nature, due mainly to the high cost of these systems.

Cost reduction is the prime objective of DOE's Low-Cost Solar Array program being managed by JPL. This program is funding technology developments and stimulating high volume solar cell procurements to achieve cell cost reductions.

A pilot plant is being designed to produce photovoltaic grade silicon from $50/kilogram to less than $10/kilogram. Various research programs are underway to develop inexpensive methods for producing basic materials, cells and cell array assemblies. Encapsulating materials for constructing cell-assemblies are presently available. However, additional materials are being evaluated to define the most cost-effective, long-term materials.

Silicon photovoltaic cell production processes are well understood. Some process validation is still necessary before process automation can be undertaken. Currently, there are some process sequences that theoretically result in costs equal to the LSA project goals of $2.00/watt by 1982 and $0.50/watt by 1986 (1975 dollars), and some advanced technology cell processes offer the hope for even further cost reductions.

(2) Solar Thermal Heat Engine Energy Conversion

Solar thermal heat engine system research and development in the United States is following several paths. At present, the principal application, particularly for the larger systems, is electricity generation. Other applications include shaftwork outputs for irrigation pumping, cooling-system compressors, etc. Technical concepts include: 1) small distributed systems in which the focal-point heat engines are integral with a parabolic "dish" reflector, 2) the central receiver, or "power tower" concept, in which multiple individually-aimed reflectors (heliostats) concentrate solar beam radiation on a single thermal receiver supported by a central tower, and 3) arrays of line-focusing

(parabolic cross-section cylindrical) reflecting concentrators, and analagous devices. These concepts are at the demonstration stage, e.g., performing irrigation water pumping. Rankine, Brayton, and Stirling engine applications are under investigation.

Like photovoltaic systems, the solar thermal heat engine approach has a relatively mature technology base. Development programs are aimed at lower capital costs with low-maintenance designs and long-term reliability. Considering that peak operating temperatures range between 500 and 2000°F, materials technology is highly important. A potential overall system efficiency of better than 30% and levelized busbar costs of electricity in the range of 50 to 60 mills/kilowatt-hour have been projected for solar thermal systems. This technology appears to be a reasonable candidate for commercial-scale solar hydrogen production by the year 2000.

(3) Wind Energy Conversion (WECS)

Wind systems are presently being developed by the U.S. Department of Energy in its Wind Energy Conversion Systems Program. The present emphasis is on relatively large wind turbine generators (0.1 to 1.0 megawatts) of the horizontal axis type. Other efforts directed toward small-scale wind energy conversion systems are also underway with the goal of applying such systems to distributed or decentralized system designs. There is no doubt that wind energy conversion represents both a potentially large energy resource combined with a near-term approach opportunity.

One of the challenges in wind energy conversion is the large fluctuation of output power due to wind velocity variations. (Power output is proportional to the cube of the wind speed.) Wind speed may vary significantly in minutes or seconds and over a wide range daily and seasonally. Moreover, windless (zero-output) situations may persist for days or weeks in some locations.

Because the basic technology is reasonably mature, and because new design approaches are producing promising results, WECS technology is also judged to be a reasonable candidate for hydrogen production via electrolysis.

(4) Small Hydropower

Hydropower systems employ mature technology that is generally practiced on a large scale. However, most available and suitably located large hydropower resources in the continental United States have already been exploited

for utility electricity generation. This is not always the situation in other countries, including the lesser developed countries, nor is it the situation in Canada, for example. Investigations are underway on the production of hydrogen from Canadian hydropower resources in the northern areas of Canada and its transmission overland for both energy and chemical feedstock users.

The use of small-scale hydropower resources, i.e., <5 MWe, for the electrolytic production of hydrogen and oxygen from water is being investigated by the U.S. Department of Energy. One development and demonstration project is presently being supported on a modest scale. The total U.S. resource of existing dam sites is large in number but relatively small in overall energy content--representing an annual output level of less than 0.3 quad* at most. Small hydropower systems therefore represent favorable, but rather limited, opportunities to construct solar/hydrogen systems. This potential contribution should not be overlooked but the use of small-scale hydropower systems to produce hydrogen in substantial fuel gas quantities is clearly not feasible in the United States.

c. Selected Hydrogen Energy Production Technology (HEPT)

(1) Water Electrolysis

Water electrolysis is the unique hydrogen energy production technology considered for solar/hydrogen production systems. The requirement for electrical power (and water) as its basic input permits it to be readily interfaced with each of the selected SECTs discussed above.

Being a fully commercialized technology, water electrolysis meets the stated selection criteria. Further, research and development programs to improve the cost and efficiency of electrolyzers are actively underway.

2. First Level System Descriptions

a. General (See Figures III-1 and III-2)

Four solar energy conversion technologies and one hydrogen energy production technology have been selected for synthesis into solar/hydrogen systems based on the assigned selection criteria. These technologies can be viewed as

---

* One quad = 10^{15} Btu.

being directly represented by subsystems, which are integrated into four solar/hydrogen production systems:

1. Photovoltaic/Electrolysis Production Systems
2. Thermal Heat Engine/Electrolysis Production Systems
3. Wind Energy/Electrolysis Production Systems
4. Small Hydropower/Electrolysis Production Systems.

b. Photovoltaic/Electrolysis Production Systems

In this class of system, shown functionally in Figure III-3, beam and/or diffuse solar radiant energy is received by photovoltaic cell arrays physically supported in a fixed or tracking mechanical support assembly. These photovoltaic arrays terminate in an output circuit(s) from which electrical power can be extracted whenever the array is illuminated by incoming solar radiation.

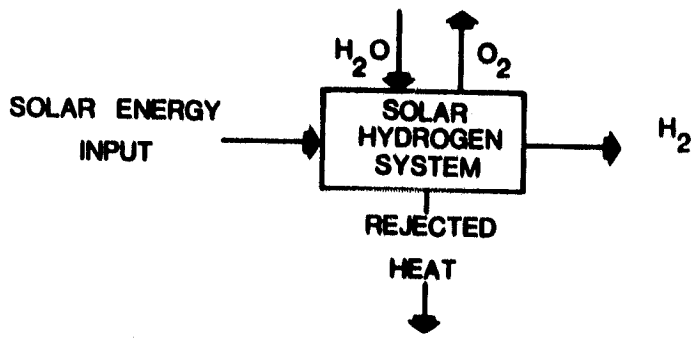

a. Basic Solar/Hydrogen System Block Diagram

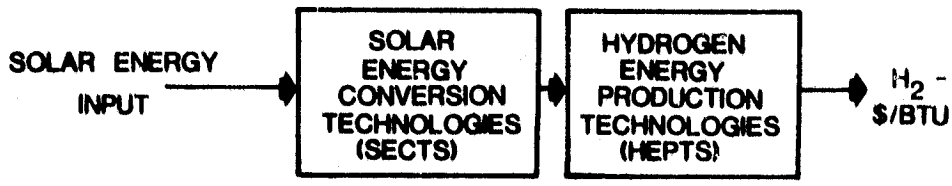

b. First Level Division of the Basis Solar/Hydrogen System into SECTS and HEPTS (Rejected Heat and O_2 Coproduct omitted for Clarity)

Figure III-1. Basic Solar/Hydrogen Production System

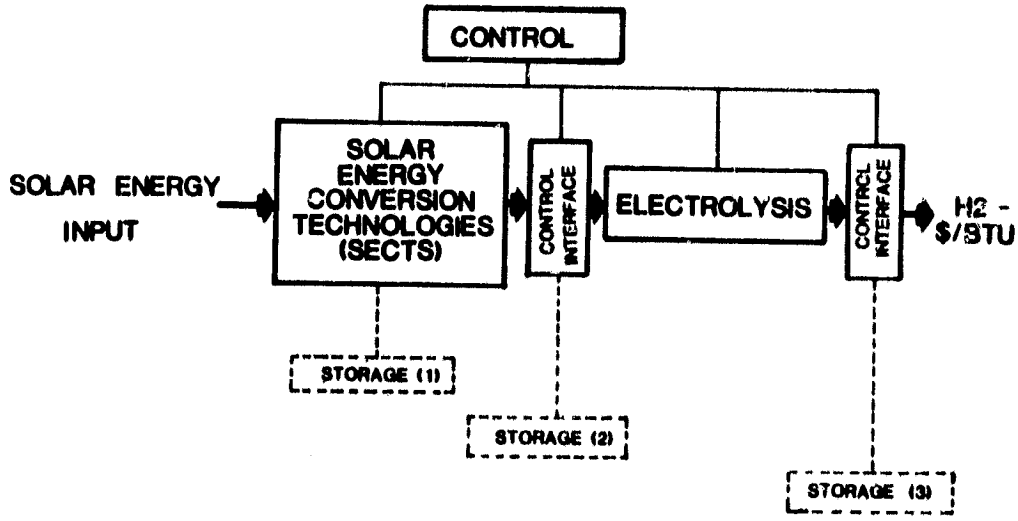

Figure III-2. A General or Representative Solar/Hydrogen Production System Block Diagram Considering Control Interfacing and Energy Storage Needs in Real Systems

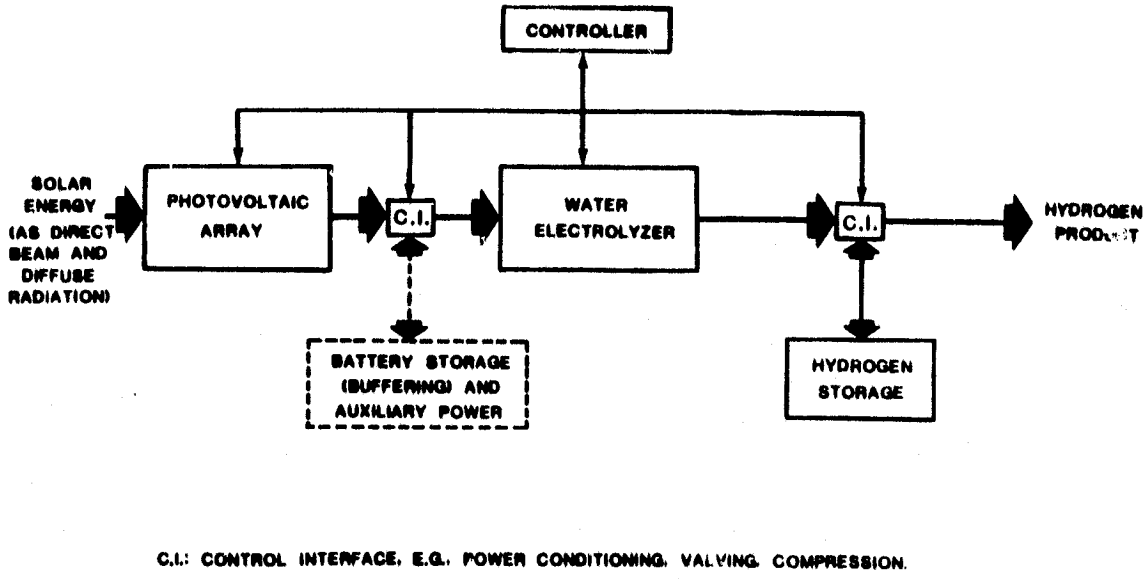

Figure III-3. Photovoltaic/Electrolysis Production System Block Diagram

The electrical output must be matched to an electrolyzer input requirement either directly or through an active "control interface" (C.I.).

Battery storage may be connected at the photovoltaic output/electrolyzer input interface as suggested in Figure III-3. However, for the overall system storage requirement, i.e., that needed for the purpose of matching solar energy input and user demand, hydrogen storage can be installed at lower cost than battery storage.*

The output hydrogen is routed to the second control interface for processing to meet specified output requirements such as pressure, flow rate schedule, and purity. If the electrolyzer provides an elevated-pressure output a hydrogen compressor may not be needed.

In many cases, particularly if storage is utilized, compressors will be included as interface components.

c. Thermal Heat-Engine/Electrolysis Production Systems

Thermal heat-engine based solar energy conversion systems can be operated with non-concentrating collectors (high-performance flat-plate collectors). However, because of their low intrinsic efficiency, such systems are not generally favored.

Concentrating collector systems are assumed in the functional diagram of Figure III-4. Direct beam (or specular) solar energy input is required with active sun-tracking. Operating temperatures for the working fluid circulating through the focal absorber depend on many factors, including collector geometric concentration ratio, relative inlet flow and temperature, thermal losses, and achievable optical/tracking accuracies.

The thermal working fluid goes to a control interface leading to either the heat engine-generator, a thermal storage subsystem, or both. A common variant has thermal storage placed in series between the collector and the heat engine.

The directly or indirectly-heated working fluid is used to operate the heat engine. Following the thermal rejection step, this fluid is returned for reheating. The specific working fluid is selected on the basis of the type of heat engine used as well as the range of involved temperatures. The heat

---

* This point is discussed in detail in attachment A to this Appendix.

engine provides output energy in the form of shaftpower.

Electricity is produced by a shaft-driven generator which can either be a conventional, fixed-frequency AC design or an unconventional, AC or DC design, e.g., acyclic generator. Generator output electrical power is switched, regulated, transformed, and/or otherwise "conditioned" within the second control interface equipment group. As in the case of the photovoltaic system, battery storage can be provided. However, as discussed in attachment A, this does not appear to be the most cost effective approach.

Electricity passing through the second control interface equipment to the water electrolyzer produces hydrogen as discussed in the photovoltaic system. The third (hydrogen product) control interface and hydrogen storage subsystem, if provided, involve essentially the same considerations as discussed for the photovoltaic system.

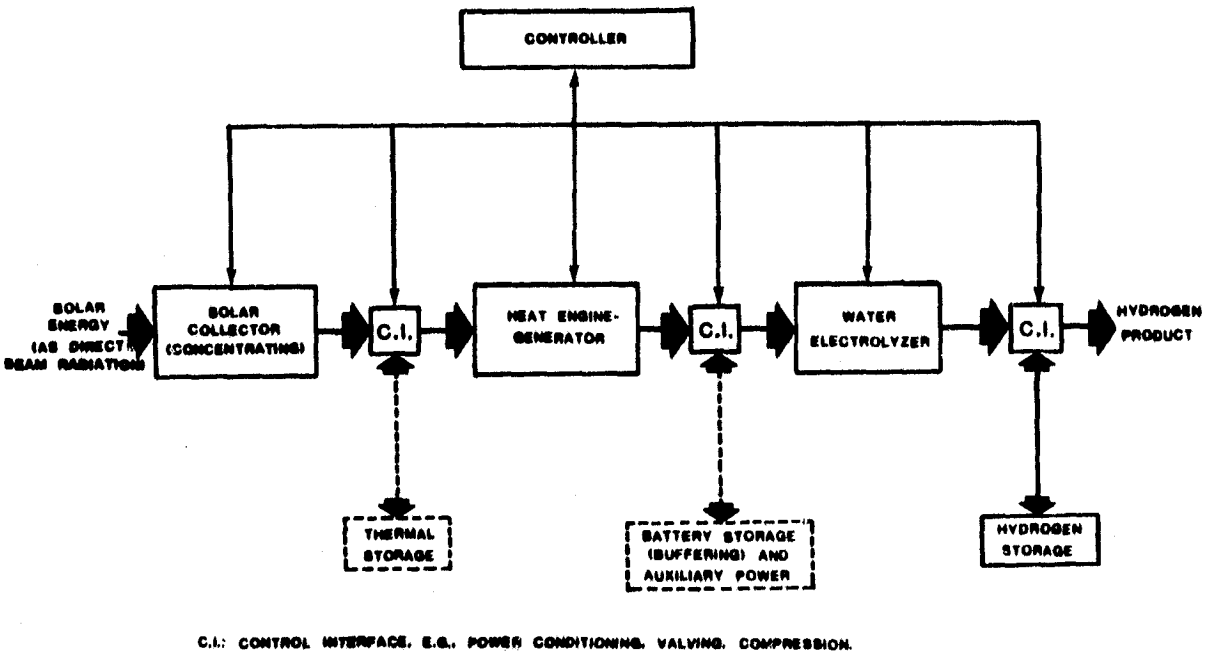

Figure III-4. Thermal Heat Engine Solar/Hydrogen Production System Block Diagram

d. Wind Energy/Electrolysis Production Systems

Figure III-5 presents a simplified block diagram of the wind/hydrogen production system.

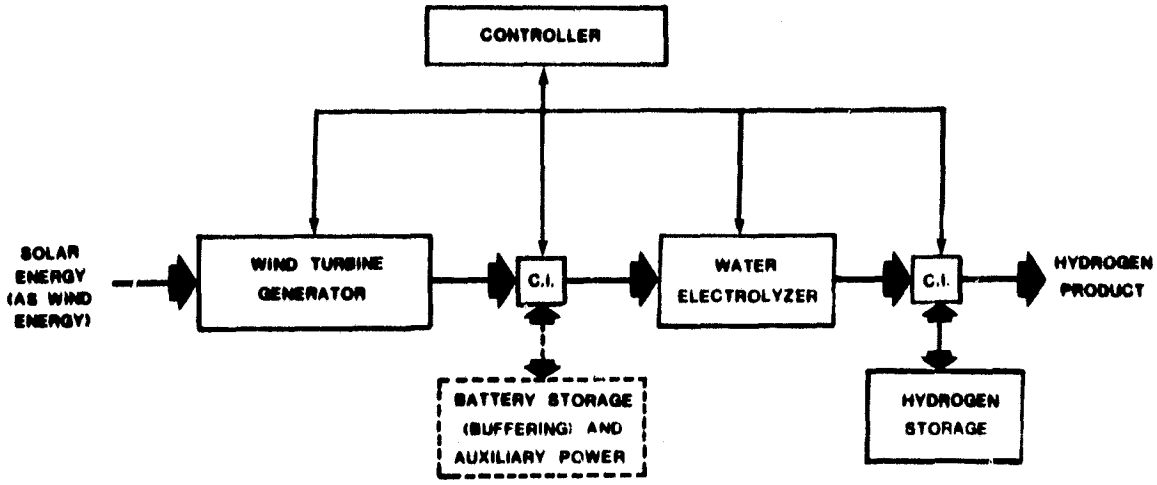

C.I.: CONTROL INTERFACE. E.G., POWER CONDITIONING, VALVING, COMPRESSION.

Figure III-5. Wind Energy Solar/Hydrogen Production System Block Diagram

In this system, the "collector" is a wind turbine (or other aerodynamic coupling device) which transforms a portion of the kinetic energy of wind passing through its characteristic "swept area" into shaft-work. However, the specific power level available from wind can vary widely in magnitude as a function of time. The wind-turbine designer must cope with this variability as a fundamental "given," e.g., protecting the equipment from overspeed conditions. For this reason, the interfacing of the turbine-generator and the water electrolyzer subsystems may pose special problems.

Output shaftpower of the turbine is used to drive an electric generator. When compared with the usual case of closely regulated AC or DC electricity output required for powering conventional electrical devices and/or for utility grid interconnection, the wind/hydrogen application may ease the system designer's job substantially in the generator subsystem.

From the electricity-to-electrolyzer control interface downstream the wind/hydrogen system is similar to those systems already discussed.

e. Small Hydropower/Electrolysis Production Systems

A functional diagram for a small hydropower/hydrogen system (Figure III-6) is quite similar to that of wind hydrogen systems. Both convert an indirect solar energy resource (contained in the form of kinetic energy of a fluid) into shaftpower with the same subsequent energy conversion steps leading to the hydrogen product.

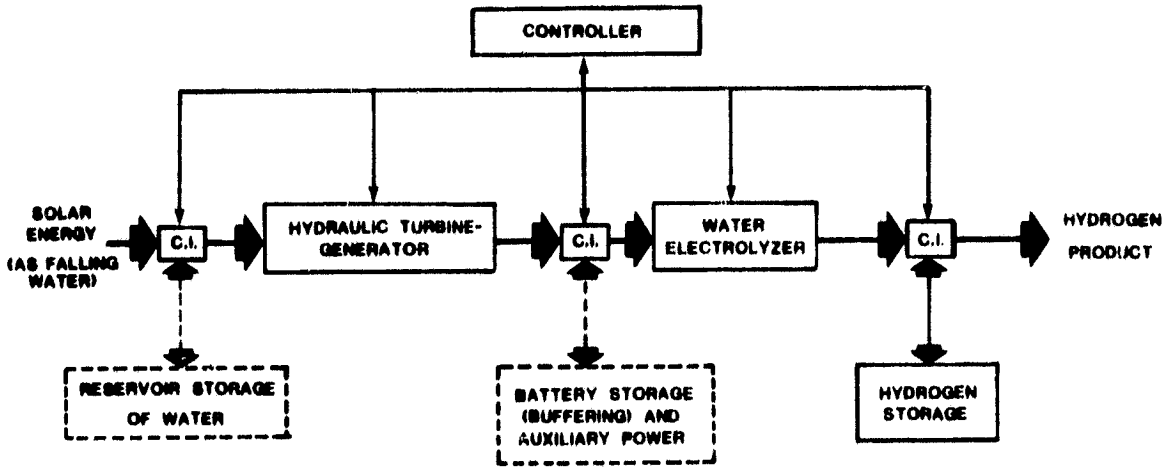

C.I. CONTROL INTERFACE, E.G., POWER CONDITIONING, VALVING, COMPRESSION.

Figure III-6. Small Hydropower Solar/Hydrogen Production System Block Diagram

However, the hydropower case often provides a greater degree of "manageability" of its falling water input not available in wind systems. This manageability is provided by the use of the upstream water reservoir as an energy storage means. Within site-specific restrictions, energy can be extracted on a scheduled basis by the hydraulic turbine thus providing higher plant factors.

This feature is reflected in Figure III-6 by the "reservoir storage" noted, the upstream control interface being a valve in the penstock. The control of stored energy in an upper reservoir is referred to as "ponding" and is associated with a change in water level in the reservoir. Ponding is typically done such that hydropower-generated electricity can be produced for

a utility grid during peak load periods (thereby producing the most valuable power).

Hydropower/hydrogen systems uniquely provide a second storage mode, not available in hydroelectric applications, namely, energy storage as product hydrogen. This permits a certain "decoupling" between the schedule of water flow (usually at a fixed head condition) through the turbine and product hydrogen flow. Where "run of the river" operation is mandated, no ponding is possible. Here, by virtue of the hydrogen storage provision, the user can still draw the product energy form on an "as required" basis, not usually available with electricity producing systems under the same circumstances.

The remaining subsystems and equipment items downstream of the hydraulic turbine would be functionally similar to those described in the three preceding system concepts.

3. SYSTEMS ENGINEERING CONSIDERATIONS

a. General

The four selected solar/hydrogen systems have been characterized to a first-order technical level in the preceding section. (See Figures III-3 to 6) The constituent technologies incorporated into optimal solar/hydrogen systems are treated more comprehensively in Volume II.

The integration of subsystems that utilize these technologies into optimal solar/hydrogen systems will involve a systems engineering process. This is approached as a matter of "interface engineering" combined with detailed attention to subsystem design. Although such detailed considerations are both market and site specific, some preliminary observations and characterizations of solar/hydrogen systems engineering are appropriate.

b. Approach: A Review by Subsystems and Control Interfaces

Since each of the selected solar/hydrogen systems incorporates a water electrolyzer subsystem, this will be discussed as a basic module. Hydrogen storage for which several technical alternatives exist is discussed as a directly related subsystem. This discussion will include the control interface between the electrolyzer and hydrogen storage subsystem and the "user interface."

Moving upstream from the electrolyzer, the generator and its prime mover in three of the systems, and the photovoltaic array in the fourth, i.e.,

the source of electrical power in each system, will be discussed. This discussion will include the generator/electrolyzer control interface, and battery storage considerations.

The solar energy collection/conversion subsystem and its associated control interfaces, if any, will be covered. Thermal storage will be mentioned in connection with the solar thermal system alternative.

Finally, system control and overall operation will be briefly addressed. This will include consideration of the basic solar energy supply/hydrogen demand matching requirement.

c. Water Electrolyzer Subsystem and Associated Control Interfaces

(1) Special Contacts with Electrolyzer Manufacturers

Individual technical contacts were made with the three major North American electrolyzer manufacturers: The Electrolyser Corporation, Ltd. (Toronto), Teledyne Energy Systems, and the General Electric Company.[1,2,3] The principal intent of this survey was the establishment of general system interface and operating requirements for the electrolyzers used as subsystem elements of solar/hydrogen systems. Of particular interest was the determination of potential "degree of freedom" available to interface solar-electric subsystems with the electrolyzers; an application departing from the conventional electric utility grid connection situation.

The electrolyzer is a flexible and "robust" system element from the interfacing point of view. Most designs are capable of accepting fast start-ups and rapid transients, including moderate-duration power overloads, if the electrolyzer is in its standby or operating mode. This usually involves only the activation of ancillary equipment, such as electrolyte circulation pumps and cooling systems.

Three types of electrolyzers are either commercially available or in the product development stage: the bipolar alkaline, the unipolar alkaline, and the solid polymer electrolyte (SPE) designs. Within the scope and depth of the assessment, no particular design preference among these types for solar/hydrogen applications is perceived, nor is there any obvious preferential match-up for a given type with one or another of the four selected solar-to-electric technologies.

None of the three manufacturers evidenced any great concern or real problem areas in the applications discussed here. Details are discussed further in Volume II, Section III.

The principle findings from this survey of manufacturers regarding electrolyzer interfacing and operation within solar/hydrogen systems were:

- Electrolyzer power controls can, in favorable designs, be reduced to an on/off switch (even during start-up), provided the power source peak output does not exceed the design limits of the electrolyzer.
- System temperature control is essentially automatic; however, when the system is not operating, it must be kept above freezing temperature.
- Continuous cycling operation, as anticipated in most solar energy systems, may require special system considerations. (This is not a restriction.)
- With the exception of routine maintenance and an occasional detailed inspection, unmanned operation of electrolyzers is feasible.

(2) Hydrogen Compressors

At present, most electrolyzers provide hydrogen product at essentially atmospheric pressure. Three exceptions are Teledyne's HS and projected HP units, which provide gas output in the range of 60 to 70 psig, and Lurgi's "Electrolytor" units, rated at 30 atm (about 450 psig).

General Electric's SPE electrolyzers are intended to produce hydrogen at pressure, with upper-limit estimates of about 600 psi. Their commercial product line is expected to have an output pressure of about 100 psi.

Depending on specific user requirements, pressure electrolyzers may eliminate the need for mechanical compressors. It is possible that atmospheric electrolyzers can serve low-pressure hydrogen without compression for certain applications, e.g., protective atmospheres.

Generally, however, and especially if conventional pressure-vessel gas storage is to be provided, hydrogen compressors will be needed. These are currently provided as ancillaries by electrolyzer manufacturers if desired by the customer. (A recent general survey and assessment of hydrogen compressors is provided in Reference 4.)

(3) Hydrogen Purification Units and Dryers

The principal impurity in the hydrogen product stream is usually oxygen.

(However, even "raw" electrolytic hydrogen is produced at about 99.9% purity.) The oxygen can easily be removed by means of a "deoxo" catalyst unit which can be installed in the product gas line. The catalyst causes hydrogen to react with the oxygen, removing it. Heat and water vapor are produced which are removed by a cooler, followed by a water separation device. Refrigeration or absorption type dryers can be employed if ultra-dry hydrogen is required.

(4) Hydrogen Flow Control and Metering

Conventional hydrogen valves, regulators, and flow-meters for the control and metering of product gas are available.

d. Hydrogen Storage Subsystem (An Option)

Hydrogen storage system technology is extensively discussed in Volume II of the report (Section IV-D). The following alternative storage techniques are available for consideration in system design: pressure-vessel, cryogenic liquid, metal hydride, underground (and underwater) storage, chemical-compound and organic chemical storage.

For smaller solar/hydrogen systems, pressure-vessel storage and metal hydride storage, are the most likely techniques. Larger systems can use the liquid hydrogen approach which best fits the requirement of long distance, large-quantity transport of hydrogen by vehicular means.

Underground (and underwater) storage of gaseous hydrogen generally implies large-volume systems as well as site-specific methods. Chemical storage of hydrogen suggests special-application-oriented uses of hydrogen.

If hydrogen storage capability is required within the system, a site- and demand-specific systems analysis must be performed for sizing purposes and determining other technical requirements. Appropriate equipment, associated with the storage subsystem or the control interface, must be provided for transferring requisite amounts of hydrogen into and out of storage.

e. Solar-to-Electricity Subsystems, Including the Electric-to-Electrolyzer Control Interface

Three of the four selected systems incorporate an electrical generator driven by a shaftpower-producing prime mover (viz., heat-engine, wind-turbine, and hydraulic turbine). The fourth derives electricity directly from a photovoltaic array.

Conventional generators have generally been used in solar/electric

systems that have been demonstrated to date. This is a result of 1) conventional utilization of the generated electricity (appliances, utility grid interconnection), and 2) the ready availability of production generator hardware from a mature technology base.

However, in the systems examined for this assessment, the electricity will be used for water electrolysis. Generator/electrolyzer matching requirements may well suggest, or even dictate, unconventional generators. These may range from special adaptations of standard generator types to new and different designs. An example of the latter would be the acyclic DC generator.

More specifically, the design challenge to be addressed is that of appropriately matching the generator and power-conditioning equipment associated with the generator-to-electrolyzer control interface. An opportunity to create a favorable match without resorting to costly, efficiency-reducing, electric power-conditioning equipment appears uniquely feasible for solar/hydrogen systems. The considerations involved in power source/electrolyzer matching are discussed in Attachment B to this Appendix.

f. Battery Storage Subsystems (An Option)

The block diagrams for the selected systems have indicated the possibility of employing electric battery storage. As discussed in Attachment A, it is doubtful that bulk energy storage applications for batteries would be incorporated into solar/hydrogen systems examined in this assessment. The cost of battery storage is not favorable in comparison to the cost of the hydrogen storage alternative.

The issue of "battery-storage" at the electric generator/electrolyzer interface requires further assessment within the framework of site specific system designs. Such a matching function would likely be dictated largely by electrolyzer electrical input requirements such as those dictating initial start-up, power transients and regulation, and shut-down conditions which can be tolerated. Battery storage might usefully provide short-term energy storage for overly-rapid input, power-level transient control, DC smoothing and overload protection.

g. Thermal Storage Subsystem (An Option for Solar Thermal Systems Only)

In assessing proposed solar thermal energy conversion systems dedicated

to electricity generation conducted to date, thermal energy storage is usually incorporated. Thermal storage can serve as a buffering device to decouple the heat-engine and generator components physically and operationally from solar collector subsystem output fluctuations, as well as providing bulk energy storage. Several specific design approaches have been utilized for achieving these functions.

Including bulk energy storage within the system increases the plant factor for those subsystems downstream of the solar collector subsystem. This provides higher energy conversion rates during lower-than-rated insolation periods, as well as extending plant operation into or through periods when solar input is unavailable.

h. Control and Operation

Each of the selected solar/hydrogen systems has been shown to include a control subsystem which is connected to each energy conversion and storage subsystem at each control interface. (See Figures III-1 through 6.) In practice, depending on system size, availability of the solar energy resource, user hydrogen demand patterns, and many other aspects, the control function will be much more simple than that suggested.

Some degree of system control is necessary to permit proper, efficient, and safe operation of any solar/hydrogen system.

B. COST CHARACTERIZATION OF THE SELECTED SOLAR/HYDROGEN PRODUCTION SYSTEMS

1. Economic Assumptions

In 1977, EPRI introduced a Technical Assessment Guide for the electric power industry.[5] The fixed-charge rates specified in the Guide for use in economic evaluations are given in Table III-1. The tax preference column assumes the use of accelerated depreciation and the availability of investment tax credits. Since these allowances are a result of current tax laws, which have a history of frequent change, EPRI recommends the inclusion of tax preference considerations only for studies of near-term projects.

Because the economic evaluation presented herein is not necessarily directed toward the electric power industry, but related to industry in general, a departure from the EPRI recommendations is considered warranted. This departure, however, is straight-forward: The assumed weighted cost of capital, 10% in the EPRI Guide, was increased to 15% for the general industry

case being addressed here. The effect of this change on the fixed-charge rate is shown graphically in the bar chart of Figure III-7 for the "no-tax-preference" case.

Table III-1. EPRI RECOMMENDED FIXED CHARGE RATES[5]

Facility Life, years	Levelized Fixed Charges,* %	
	Without Tax Preference	With Tax Preference
5	34	29
10	23	19
15	20	16
20	19	15
25	18	15

* Includes return, depreciation, allowance for debt retirement dispersion, income taxes, other taxes, and insurance. Excludes operation and maintenance.

Due to the importance of energy conservation and alternative energy systems to the Nation's economic future, a tax preference case has also been assumed for this study. Table III-2 shows the resulting fixed-charge rates used.

Table III-2. FIXED CHARGE RATES ASSUMED

Facility Book Life, years	Fixed Charge Rate, %
5	36.00
10	26.25
15	23.73
20	23.50
25	23.25

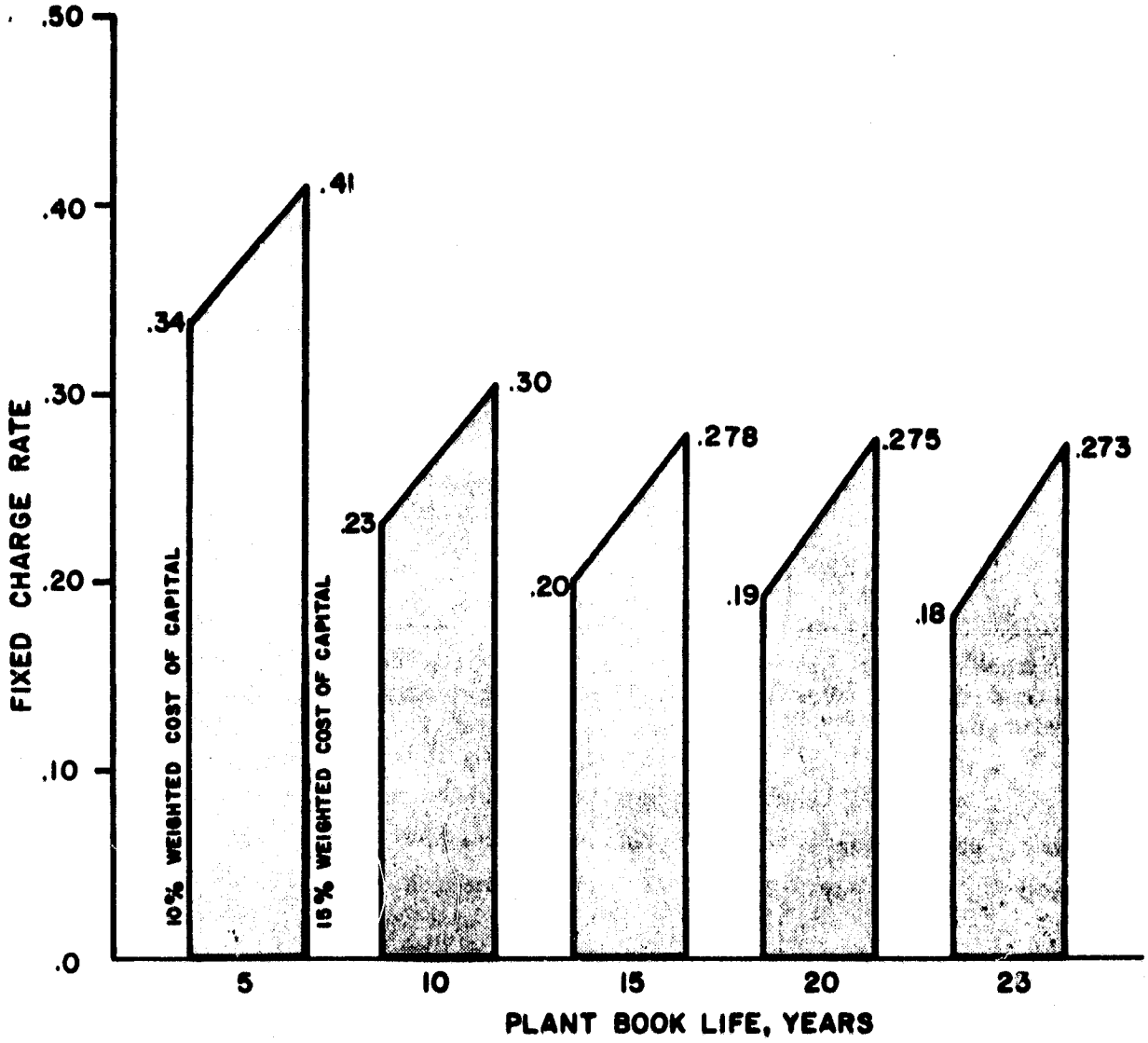

Figure III-7. Comparison of Fixed-Charge Rates For Two Weighted Costs Of Capital

2. Operating and Maintenance Cost Assumptions

In addition to the basic financial assumptions, which reflect the required rate of return, annual system operating and maintenance (O&M) costs must be determined. O&M cost estimates represent an area of costing uncertainty, given that solar/hydrogen energy systems do not have an operating history from which to draw. However, some of the components and subsystems making up conceptual systems discussed in this report have histories of operation which can be used for guidance in developing system O&M cost estimates.

In general, the levelized annual costs reported for such systems range from 2% to 7% of the installed facility cost depending on the plant size and the extent of automated operation.[6-13] For this analysis, an annual O&M cost of 3% of the total installed plant cost was assumed. This considers that the selected solar energy conversion subsystems--photovoltaic, wind, solar thermal, and small hydropower--are all expected to be amenable to highly automated designs.

As historically demonstrated, water electrolyzer systems require very little attention from operating personnel, on the order of less than one hour per day, and work is in progress to further automate electrolyzer systems.[1-3] In brief, this subsystem area is considered "industrially mature."

Figure III-8 presents the plant installed capital cost and plant-factor combinations which result in a range of hydrogen costs from $25 to $100/million Btu for both 5- and 25-year plant book lives. This presentation, though approximate, is felt to be generally valid with the possible exception of two extremes: 1) low-cost, very small plants, and 2) high-cost, large plants. In these cases, the 3% allowance for O&M should probably be adjusted upward for the low-cost plant and downward for the high-cost plant. Such adjustments can be considered in subsequent analyses of specific solar/hydrogen systems.

3. Subsystem and System Costs

All of the selected solar/hydrogen production systems consist of a water electrolyzer subsystem plus a solar-to-electricity subsystem of one of four types. For each case, in this analysis, the total system cost is assumed to be simply the sum of the cost of the two subsystems. Special, separate attention was not given to any additional interfacing costs associated with the integrated systems. Instead, the cost of those interface elements built into each subsystem (e.g., the AC-to-DC converter within the electrolyzer subsystem) was assumed adequate to cover all interface needs. In cases where this assumption may not hold, the magnitude of potential system cost differences is estimated to be less that ± $50 per kilowatt of installed hydrogen production capacity, a relatively small fraction of total cost. All equipment costs are expressed in 1980 dollars unless otherwise stated.

a. Water Electrolyzer Costs

Figure III-9 shows the assumed installed costs for the water electrolyzer

subsystem on a basis of dollars per kilowatt of hydrogen output capacity for both present (1980) and advanced (2000) technology systems. These costs are based on published data, with the advanced electrolyzer costs predicated on the achievement of a mature industrial status for present developmental systems.[8-12,14] The two cost curves shown represent essentially all types of competitive technology and design approaches.

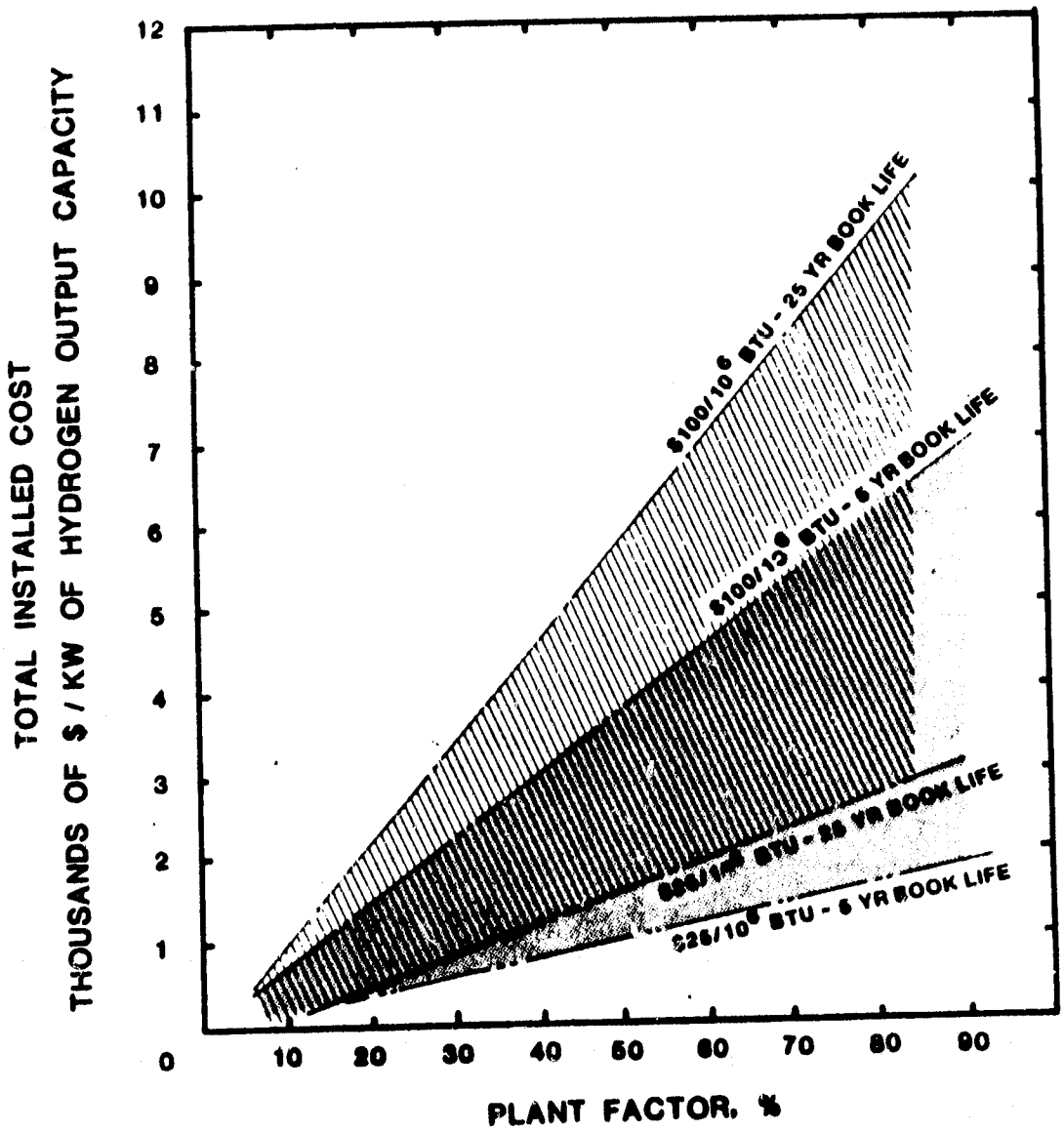

Figure III-8. System Installed Cost vs. Plant Factor for Hydrogen Costs of $25 to $100/10^6 Btu at Plant Book Lives of 5 and 25 Years

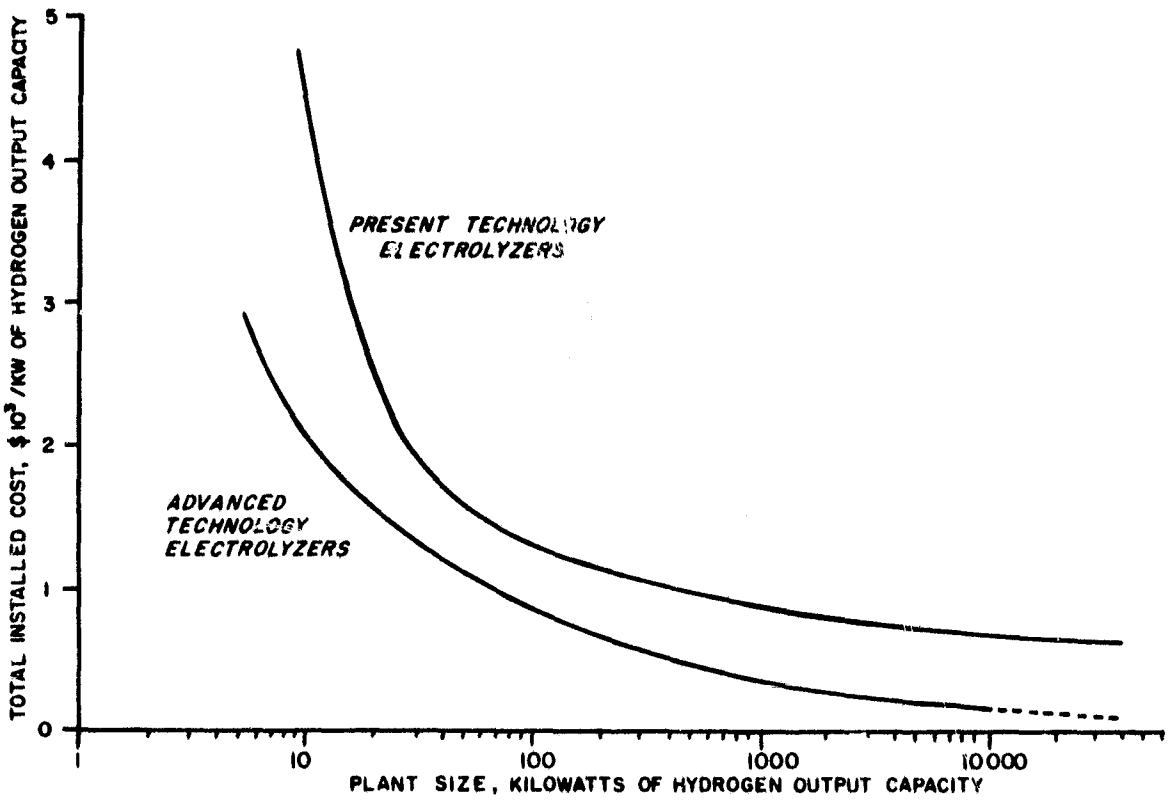

Figure III-9. Installed Cost of Electrolyzer Plants as a Function of Size

The total electrolyzer subsystem efficiency (not just the cell efficiency which is somewhat higher) in this analysis was taken as 70% for present technology (1980 basis) and 85% for advanced technology (2000 basis). A midpoint efficiency of 77.5% and a midpoint cost were assumed for 1990 time-frame projections.

b. Solar/Hydrogen Subsystem Cost Considerations

Cost estimates for hydrogen produced from solar/hydrogen production systems are provided in the next several subsections as a function of installed capital cost ($/kW of hydrogen output capacity) and plant factor. In each case, the system cost ranges will be shown as areas on the plots. These reflect both the effect of time (assumed technology improvements and/or the establishment of volume production rates) and system size. These considerations affect the vertical dimensions of the system-associated areas.

The plant factor ranges are the limits that one would normally expect for the specific system under consideration. This mainly reflects characteristics of the involved solar-to-electric subsystem.

With the exception of thermal heat-engine solar/hydrogen systems, the inclusion of energy storage is not considered in the plant factor ranges shown. The inclusion of energy storage here, resulting in a broad plant factor range for solar thermal heat-engine systems, derives from the nature of the available literature on solar thermal electric systems, which include energy storage.

In each case, no single cost of hydrogen is specified. Rather, cost/plant factor boundaries are defined and overlayed on the previously described general cost estimation plot (Figure III-8) for each of the selected systems.

c. Photovoltaic Solar/Hydrogen Production Systems[15,16]

For photovoltaic solar/hydrogen production systems, the installed cost/plant factor boundaries are shown in Figure III-10. Two regions marked "A" and "B" are shown. Region B assumes the achievement of the 1982 photovoltaic array cost goal of $2/peak watt electric (1975 dollars), with the installed cost estimated to be 150% of the photovoltaic array cost. After updating to 1980 dollars, the photovoltaic subsystem cost was matched* with present technology electrolyzers to obtain total system cost. Electrolyzers at the 10-kW and 30-MW system size level were selected to define the upper and lower bounds of Region B. Region A was established in the same manner as Region B, with the difference being that the 1990 photovoltaic array cost goal of $0.20/peak watt electric (1975 dollars) was assumed, along with advanced technology electrolysis equipment. If systems were to be assembled on the basis of today's electrolyzer and photovoltaic technology, costs would be very high, in the range of $20,000/kW of hydrogen output capacity, out of the range of Figure III-10.

d. Thermal Heat Engine Solar/Hydrogen Production Systems[7,15,17]

Figure III-11 presents the estimated installed cost/plant factor boundaries for thermal heat engine solar/hydrogen production systems and, again, two regions are shown. Region B represents systems in the 100-kW class for the 1990 to 2000 time period, and Region A represents systems of 1 to several

---

* The size of the solar-to-electric subsystem (in kW_e) required per kW_{H_2} of electrolyzer equals 1 divided by the electrolyzer efficiency (%).

hundred megawatts for the same time period. Solar to electricity subsystem cost ranged from $1800/kW$_e$ (1978 dollars) for the smaller systems in 1990 to $1000/kW$_e$ (1978 dollars) for the larger systems in the year 2000. Electrolyzer technology assumed was midpoint (between present and advanced) for the 1990 time frame, and advanced for the year 2000.

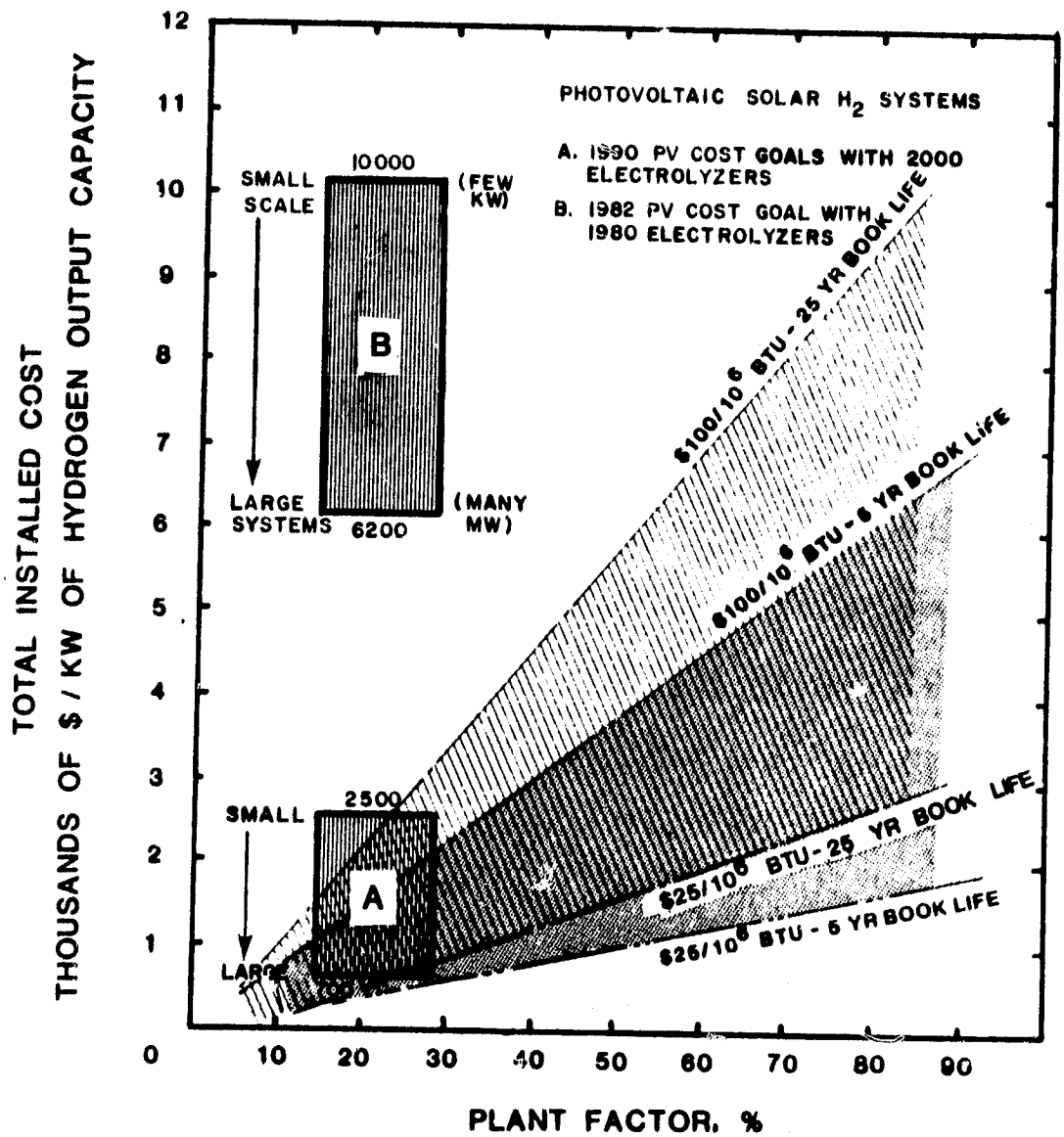

Figure III-10. Projected Photovoltaic Solar/Hydrogen Plant Cost vs. Plant Factor, Product Cost, and Book Life (1980 dollars)

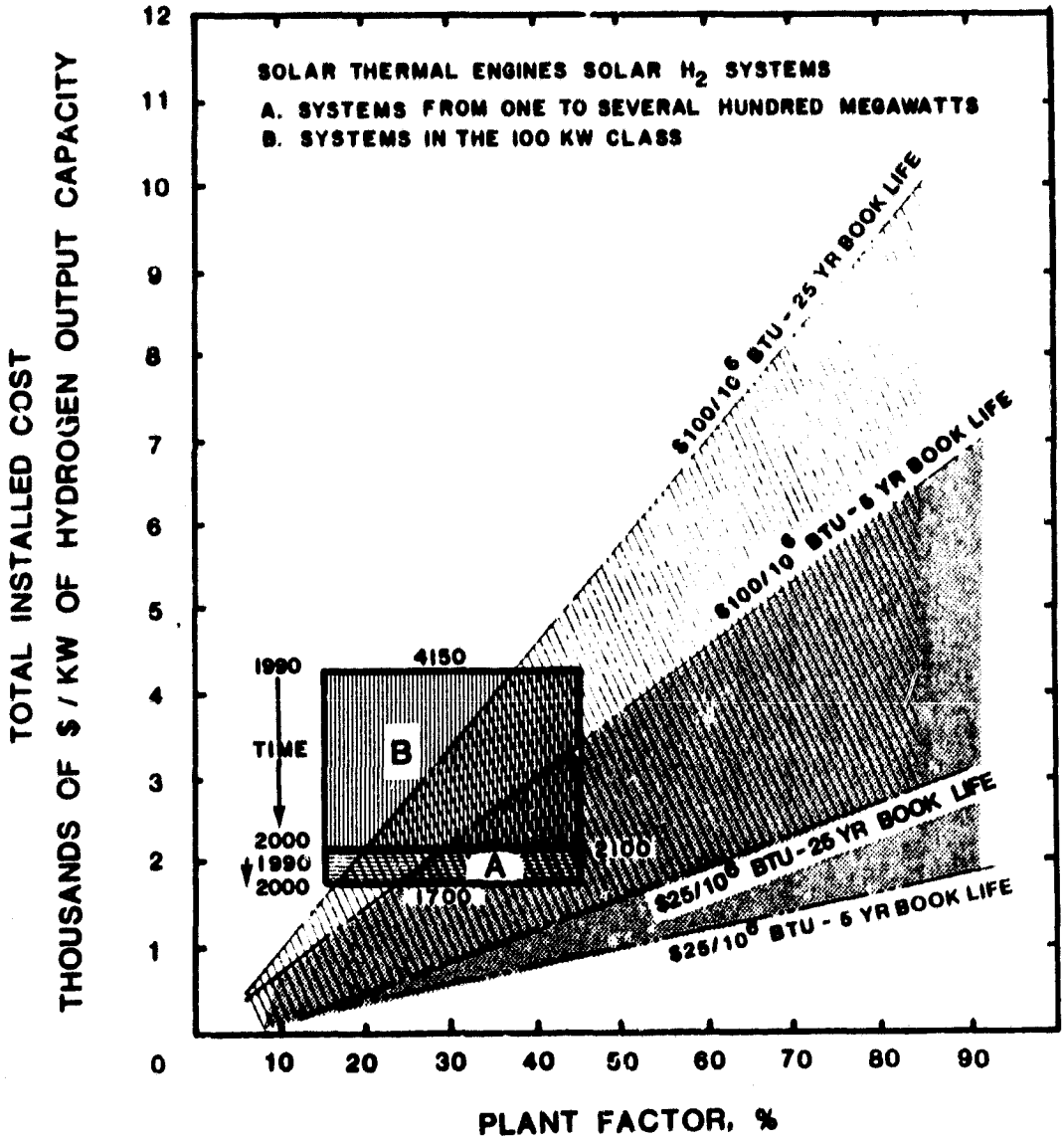

Figure III-11. Projected Solar Thermal Engine Solar/Hydrogen Plant Cost vs. Plant Factor, Product Cost, and Book Life (1980 dollars)

e. Wind Energy Solar/Hydrogen Production Systems[6,10,13,18-20]

Three estimated installed cost/plant factor boundary regions are shown for wind energy solar/hydrogen production systems in Figure III-12. The Regions A through C roughly correspond to systems of 10 MW, 500 kW, and 10 kW, respectively. Except for Region A, which represents the large systems in the year 2000, the regions' upper and lower boundaries reflect expected system improvements with time. Table III-3 shows the time dependent cost values used in establishing each regions' boundaries, in 1980 dollars.

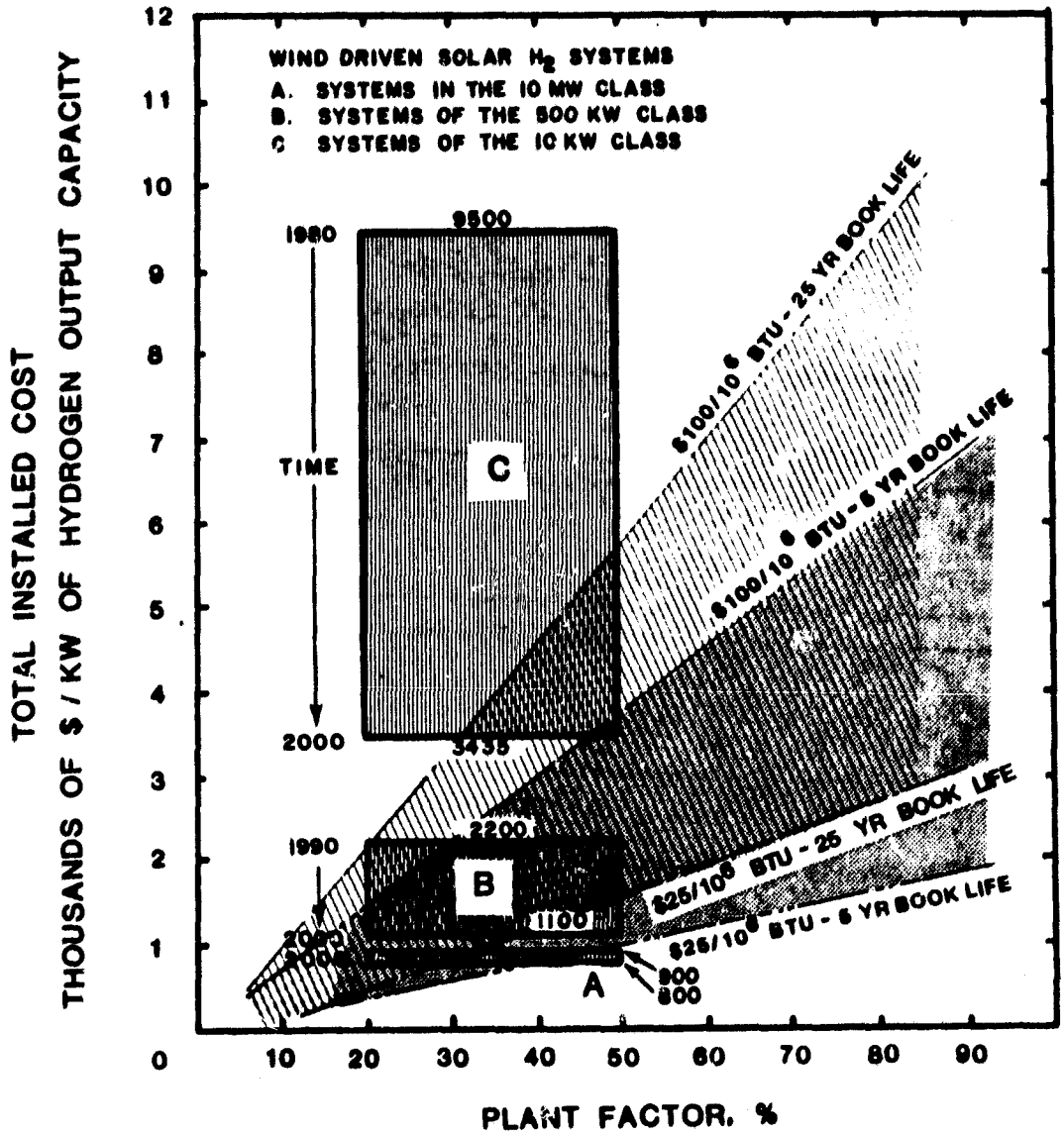

Figure III-12. Present and Projected Wind Driven Solar/Hydrogen Plant Cost vs. Plant Factor, Product Cost, and Book Life (1980 dollars)

f. Small Hydropower Solar/Hydrogen Production Systems[12,15,21]

Hydropower represents a rather mature technology, with cost estimates in 1980 dollars ranging from $\$2750/kW_e$ for 200-kW systems down to $\$440/kW_e$ for megawatt size systems. Production-related cost reduction, rather than technology-related cost reductions, are much more likely for this solar-to-electricity subsystem. However, in line with the current industry practice of single unit, custom production in response to a specific customer order, no

solar-to-electric subsystem high-production cost benefits have been projected in this analysis although such a cost-reduction avenue is potentially available. The cost and efficiency benefits associated with electrolyzer subsystem improvements with time are included.

Table III-3. INSTALLED COST OF SUBSYSTEMS FOR WIND ENERGY SOLAR/HYDROGEN PRODUCTION SYSTEMS

Year	Wind-to-Electric Subsystem, $/kW	Water Electrolyzer Subsystem, $/kW$_{H_2}$ (Ref. Figure III-9)
	Large Systems	(10 MW)
2000	522-607	185 (Advanced Technology)
	Medium Systems	(500 kW)
1990	1150	700 (Midpoint Technology)
2000	575	450 (Advanced Technology)
	Small Systems	(10 kW)
1980	3450	4522 (Present Technology)
2000	1150	2082 (Advanced Technology)

Figure III-13 shows the two regions defined by the estimated installed cost/plant factor boundaries for small hydropower solar/hydrogen production systems. The difference in these two regions is the cost and efficiency of present technology electrolyzers versus advanced technology electrolyzers.

4. Cash-Flow Benefits From Modular Construction

In contrast to conventional utility system energy conversion facilities which are characterized by --

- units with very large outputs, and
- relatively long construction periods.

Solar/hydrogen systems (and solar energy systems generally) are amenable to modular construction. Such modules would tend to have 1) smaller unit outputs (a fraction of the total ultimate plant), but 2) early "on-line" productive capability.

In future time frames, say beyond 2000, where large solar/hydrogen production systems might be developed, the "modularity" potential of solar energy systems can provide economic advantages. When compared with a more conventional large energy production facility, such as a nuclear-electric

power plant, the ability to productively operate portions, or modules, of the solar facility prior to the completion of the entire plant can improve the cash-flow position and reduce the debt-load associated with building the total facility. Or if a leveraged position is preferred, the internal funds generated are available for other investment opportunities.

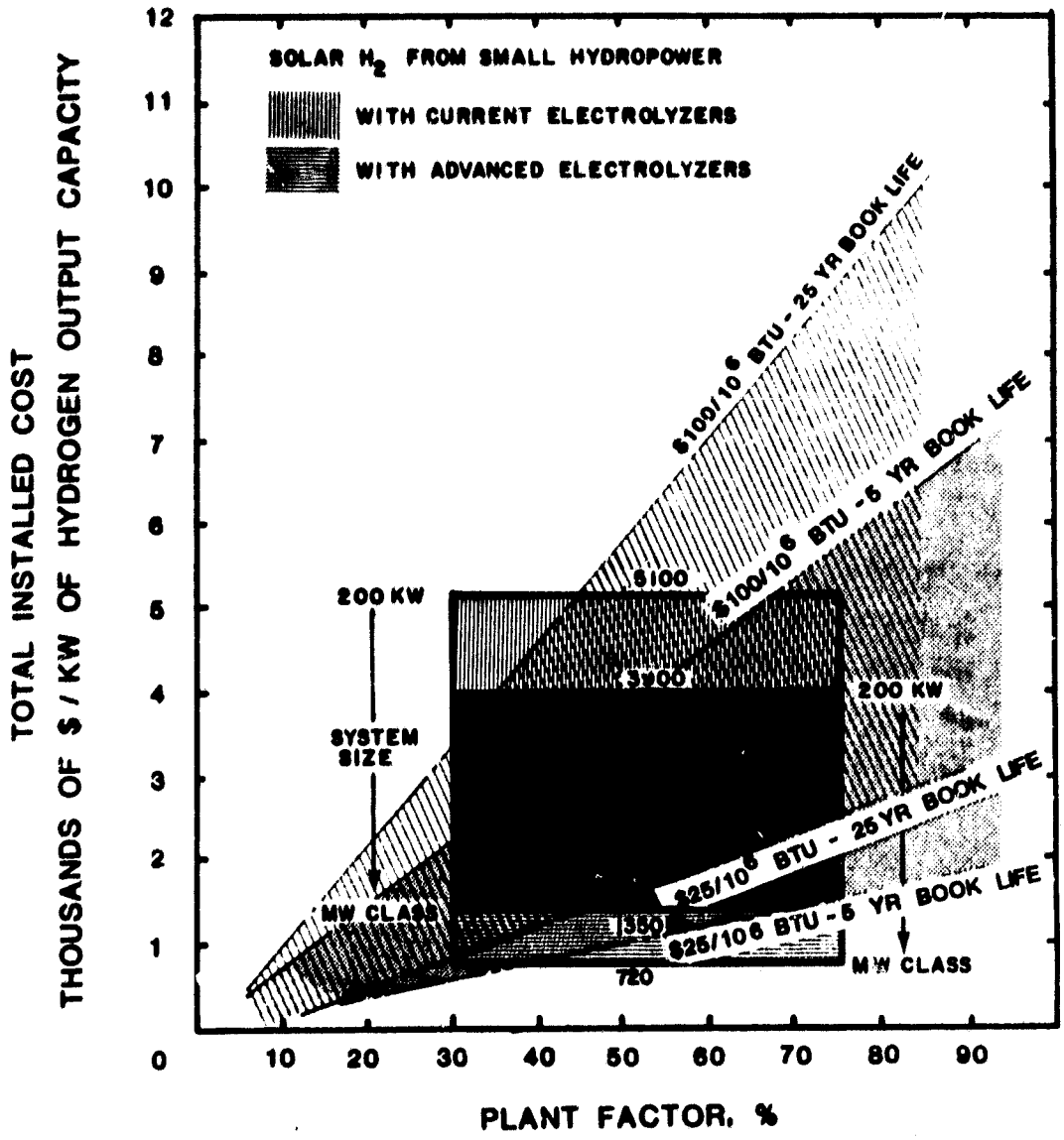

Figure III-[illegible]. Present and Projected Small Hydropower Solar/Hydrogen Plant Cost vs. Plant Factor, Product Cost, and Book Life (1980 dollars)

This amount of capital available is calculated as a combined equity principal[a] and a debt retirement allocation.[b] This amount, on a levelized annual basis, equals the total installed plant cost times a sinking fund factor. Where the sinking fund factor (SFF) is:

$$SFF_{k,n} = \frac{k}{(1+k)^n - 1} \qquad \text{(III-1)}$$

and

k = after-tax internal rate of return assumed here to equal to the after-tax weighted cost of capital. (Thus, for a tax rate of 50% and a weighted cost of capital equal to 15%, k = 7.5%.)

n = plant book life.

For a modular energy production facility of the same size and total cost, each plant module is taken to be equal to $\frac{1}{CT^*}$ of the conventional plant and is assumed to take one year to become operational. As an example, if the conventional plant construction time is 5 years, 5 modules of the modular plant being compared are assumed constructed in series. These modules would progressively come "on line" at the end of the first through the fifth year.

As can be seen from Figure III-14, the modular approach offers more financial advantage to the shorter book life investment decision than to the longer utility type (20 to 25 year book life) practice.

---

a The actual disposition of this return is a company decision; it may be added to dividend payments or reinvested in other projects.

b Debt retirement is assumed to occur at the end of the plant book life.

*c CT = construction time of conventional plant.

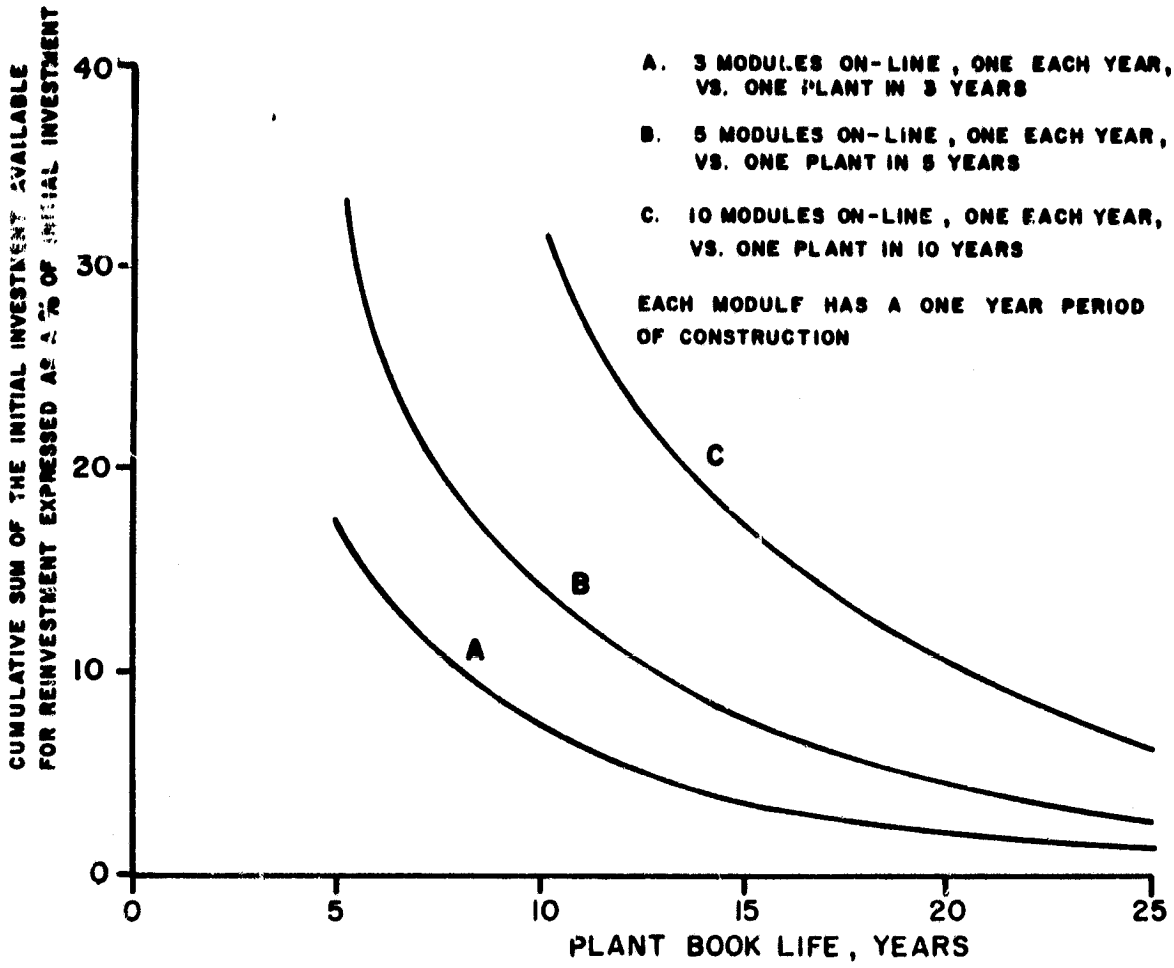

Figure III-14. Cumulative Sum of the Initial Plant Investment Available for Reinvestment as a Result of Modular Plant Construction vs. Non-Modular Construction at the End of the Non-Modular Plants' Normal Construction Time

References Cited

1. Kincaide, W., Teled[illegible] Energy Systems, private communication of November 1979.

2. Craft, R., The Electrolyser Corporation, Ltd., private communication of November 1979.

3. Nuttall, L., General Electric Company, private communication of November 1979.

C-2

4. Phadke, L.G., et al., "An Assessment of Hydrogen Compressor Technology for Energy Storage and Transmission Systems," prepared for the U.S. Department of Energy by the Clean Energy Research Institute, University of Miami and Escher Technology Associates under Contract No. EC-77-S-05-5598, January 1979.

5. Anon., "Technical Assessment Guide," by the Electric Power Research Institute, Technical Assessment Group, August 1977.

6. Anon , "Summary of Current Cost Estimates of Large Wind Energy Systems," by JBF Scientific Corporation, Washington, DC, prepared for the Energy Research and Development Administration, DSE/2521-1, April 1977.

7. Fujita, T., et al., "Projection of Distributed-Collector Solar-Thermal Electric Power Plants Economics to Years 1990-2000," prepared for the U.S. Department of Energy by the CalTech Jet Propulsion Laboratory, DOE/JPL/1060-1, JPL Publication No. 77-74, Pasadena, California, 1977.

8. Fein, E., et al., "The Market Potential for Electrolytic Hydrogen," Final Report prepared for the Electric Power Research Institute, by the Futures Group, Inc., Glastonbury, Connecticut, August 1979.

9. Biederman, N.P., et al., "Utilization of Off-Peak Power to Produce Industrial Hydrogen," Final Report prepared for the Electric Power Research Institute by the Institute of Gas Technology, Chicago, August 1975.

10. Tison, R.R., et al., "Wind-Powered Hydrogen Electric Systems for Farm and Rural Use," Final Report prepared for the National Science Foundation by the Institute of Gas Technology, Chicago, April 1976.

11. Donakowski, T.D., and Escher, W.J.D., "Efficiency and Cost Advantages of an Advanced-Technology Nuclear-Electrolytic Hydrogen-Energy Production Facility." Paper presented at the Comparative Economics for Synfuels Processing Symposium, an American Chemical Society Centennial Meeting, New York, New York, April 4-9, 1976.

12. Johnson, D.G., et al., "Hydrogen From Small Existing Falling Water Sites: An Initial Feasibility Assessment," Final Report prepared for the U.S. Department of Energy, Brookhaven National Laboratory, by the Institute of Gas Technology and the Pennsylvania Gas and Water Company, Chicago, June 1978.

13. Sullivan, W.N., "Economic Analysis of Darrieus Vertical Axis Wind Turbine Systems for the Generation of Utility Grid Electrical Power," prepared for the U.S. Department of Energy by Sandia Laboratories, Albuquerque, New Mexico, and Livermore, California, August 1979.

14. Escher, W.J.D., and Hanson, J.A., "Solar Hydrogen in the Model Energy Community." Paper presented at the Second International Helioscience Institute Conference and Exhibit on Alternative Energy, Palm Springs, California, April 8-10, 1978.

15. U.S. Department of Energy, "Photovoltaic Program," Program Summary, January 1978.

17. Barber, R.E., "Current Costs of Solar Powered Organic Rankine Cycle Engines," Solar Energy 20, No. 1 (Pergamon Press).

18. Private communication with KEDCO, Inc., Inglewood, California, October 1979.

19. Yeoman, J., "Wind Turbines," prepared by Oak Ridge National Laboratory, Oak Ridge, Tennessee, for Argonne National Laboratory, Argonne, Illinois, December 1978.

20. Anon., "Wind Power Digest, 1979 Wind Access Catalog," Winter 1978, published by Michael Evans, Bristol, Indiana.

21. O'Brien, E., "Evaluation of Hydroelectric Potential in the Northeast," by Tippetts-Abbett-McCarthy-Stratton, New York, New York, April 1978.

ATTACHMENT A
TO
APPENDIX III

COMPARATIVE COST ANALYSIS OF ALTERNATIVE ENERGY STORAGE SUBSYSTEMS IN THE SELECTED SOLAR/HYDROGEN SYSTEMS

Introduction and Purpose of Analysis

Energy storage is an important consideration in solar/hydrogen systems because of the requirement for matching the user demand schedule for hydrogen with the variable solar energy input. Several types of energy storage subsystems, and locations within the overall system, can be considered for solar/hydrogen systems (Figure A-1):

- Type 1: that directly associated with the solar energy conversion step (or SECT)
- Type 2: that associated with the control interface between the SECT and the water electrolyzer
- Type 3: product hydrogen storage, between the electrolyzer and the water.

Table A-1 presents each of these in context with the selected candidate systems. All four selected systems share in their ability to use both electricity- and hydrogen-based storage. Additionally, thermal heat-engine systems can incorporate thermal energy storage. In fact, inclusion of thermal storage is more the rule than the exception in thermal-electric systems studied to date (e.g., Reference 1).

With the several alternatives available, it is important to understand how each storage mode affects system design and integration. Most significant is the comparative impact on the cost of the hydrogen product from each approach. The study briefly summarized here was carried out to gain a better understanding of these points. Specifically, an indication of the lowest cost storage approach for each selected system was sought.

PAGE BLANK NOT FILMED

QUALITY

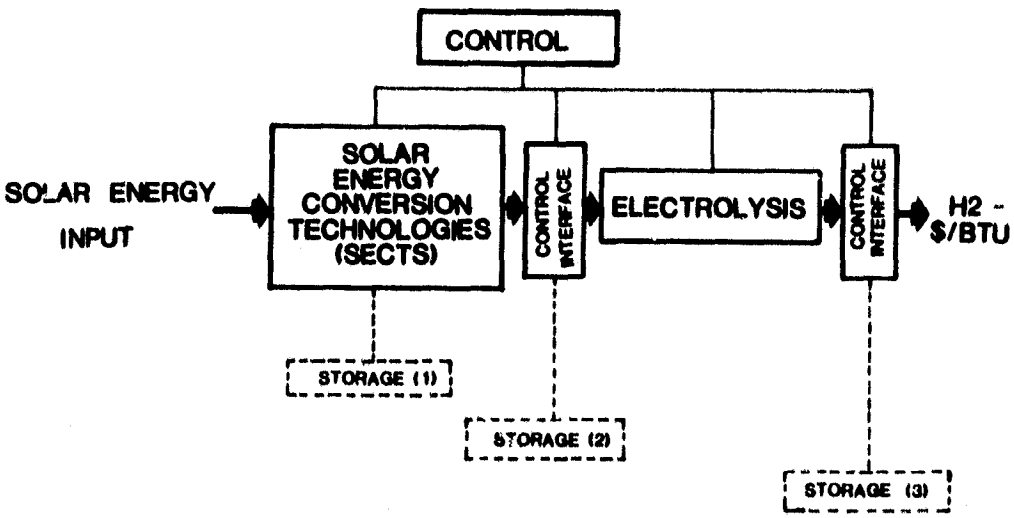

Figure A-1. GENERALIZED SELECTED SOLAR/HYDROGEN SYSTEM

Table A-1. ENERGY STORAGE SUBSYSTEM TYPES FOR THE SELECTED SYSTEMS

	Type 1	Type 2	Type 3
Photovoltaic	--	Electricity	Hydrogen
Thermal	Thermal	Electricity	Hydrogen
Wind	--	Electricity	Hydrogen
Hydropower	--*	Electricity	Hydrogen

*Upper reservoir storage ("ponding") is a distinct possibility, except where run-of-the-river operation is necessary. However, ponding storage, though an advantageous approach, is not further considered here.

Assumptions

The following simplifying assumptions were made:

1. All systems considered were dedicated to hydrogen production only (no electrical or thermal side production).

2. Energy storage capabilities added serves only the storage function related to the hydrogen product output. (Other possible system benefits, e.g., interface buffering, were not considered.)

3. The storage system does not add to the system's peak output capability.

4. Storage modes were limited to the following approaches:

   - Thermal -- state-of-the-art, with specific approach depending on the system and its operating temperature
   - Electricity -- state-of-the-art, lead-acid storage battery systems of the type considered for utility load-leveling service, etc.
   - Hydrogen -- conventional pressurized gas storage container systems, such as those fabricated from gas line-pipe with storage pressures of about 1000 psi, equipped with compressors assumed operated by product-hydrogen fueled heat engines at 0.30 thermal efficiency.

5. The thermal, battery, and hydrogen storage systems had the fixed capital costs and operating efficiencies given in Table A-2.

6. Overall water electrolyzer subsystem capital costs were $300/kWhr, and efficiency was 80%.

7. Overall annual plant factors for the four selected solar/hydrogen systems were:

   - Solar thermal heat-engine = 0.25
   - Photovoltaic, wind, and hydropower = 0.20 and 0.50

8. Capital costs for the SECT-related subsystem, i.e., the equipment upstream of the electrical interface (solar collector-plus-generator) were:

   - Solar Thermal
     - Collector and transport subsystem = $300 and $100/kW$_{th}$
     - Heat Engine = $250/kW$_e$
   - Photovoltaic, wind, and hydropower = $3000 and $1000/kW$_e$

9. The heat engine's assumed efficiency is 30%.

Table A-2. ASSUMED CAPITAL COSTS AND OPERATING EFFICIENCIES FOR ENERGY STORAGE SYSTEMS

Storage Type	Capital Cost,[a] $/10^6 Btu	Operating Efficiency, in/out
Thermal	13,185[b]	0.80[e]
Battery	29,300[c]	0.80[f]
Hydrogen	3,260[d]	0.91[g]

a All costs inflated to 1980 dollars using 5%/year.

b Based on thermal storage system cost of $45/kWhr (References 2,3).

c Based on battery cost of $60/kWhr with two cell rebuilds over 20-year life at $20/kWhr each. Does not include AC-DC conversion equipment, does include shelter (Reference 2).

d Based on a capital cost of $1.06 SCF; includes compressor (References 4,5).

e Includes pumping; split evenly between input and output functions.

f Does not include AC-DC conversion equipment; split evenly between input and output functions.

g Efficiency loss occurs on input mainly from compression.

Method of Analysis

Since the purpose of the analysis was to determine relative costs of storage among the storage subsystem candidates applicable to the selected solar/hydrogen systems, an incremental--rather than an absolute--hydrogen output requirement approach was taken.

The simplified system of Figure A-2 was evaluated for an incremental increase in hydrogen production over an unstated "present" capability. The total incremental amount added (10^6 Btu) was to be retainable in energy storage within the system, and cycled on a daily basis. Further, the storage modes were not considered to increase the system's peak output. This consideration allowed all components downstream (toward the output side of the system) of the storage system to retain their initial size. The benefit of this assumption is that the final cost of the battery and thermal storage system increments was held down. If the stored 10^6 Btu increment were to be used to increase

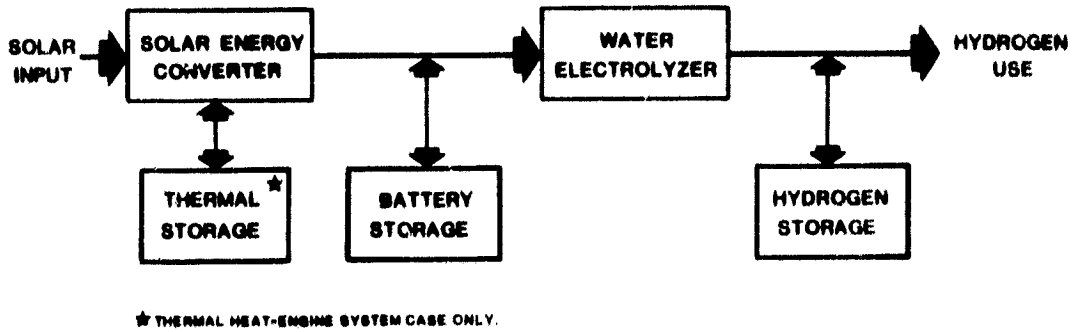

Figure A-2. SOLAR/HYDROGEN SYSTEM WITH ENERGY STORAGE ALTERNATIVES AS ANALYZED

peak output over a 1 hour time period, system cost would increase about $179,000 for the thermal storage mode and $91,000 for the battery storage mode. The hydrogen storage mode costs would be the same whether used for output leveling or adding to the peak output since no system components are affected by the flow rate from storage at this point in the system.

As suggested by the assumptions made, the basically similar characteristics of three of the solar/hydrogen systems--photovoltaic, wind, and hydropower--permitted them to be treated in a single calculation for two plant factors. The thermal heat-engine system was treated by itself for one plant factor.

Incremental storage costs were calculated considering:

- Added capital cost for the storage capacity of the type in question. (Note: only one storage system at a time was examined.)
- Added capital cost required for upsizing of subsystems upstream of the storage system to produce the energy form placed into storage (thermal, electrical, hydrogen).
- All affected storage and energy conversion subsystems efficiencies. (Note: efficiencies have a direct effect on subsystem up-sizing.)

Table A-3 presents the results of the analysis in terms of total system cost for a storage system that provides 10^6 Btu of hydrogen output.

Table A-3. INCREMENTAL COST OF HYDROGEN OUTPUT FROM THE VARIOUS STORAGE SUBSYSTEM TYPES POSSIBLE IN SOLAR/HYDROGEN SYSTEMS ($/10^6 Btu H_2 [HHV])*

	SYSTEMS: Photovoltaic, Wind, and Hydropower Based			
Plant Factor	0.20		0.50	
Solar Energy Conversion Subsystem Capital Cost ($/kW$_e$)	3000	1000	3000	1000
Storage Subsystem Type	Incremental Storage Cost To Produce 10^6 Btu of H_2 Output 10^3 Dollars			
Battery	327	136	155	79
Hydrogen	275	107	112	45

	SYSTEM: Thermal Heat-Engine Based (Plant Factor = 0.25)	
Collector and Transport Cost, $/kW$_{th}$	500	100
Storage Subsystem Type	Incremental Storage Cost To Produce 10^6 Btu of H_2 Output 10^3 Dollars	
Thermal	186	185
Battery	187	86
Hydrogen	147	58

* All costs are installed

Discussion of Results

The main finding of the analysis is that hydrogen storage is the lowest cost option among hydrogen, battery, and (where applicable) thermal energy storage approaches. These alternative storage approaches were found to have costs which range from about 20% to 70% over hydrogen storage.

For the systems evaluated at two plant factors, 0.20 and 0.50 (photovoltaic, wind, and hydropower), the cost advantage for hydrogen storage was greater at the larger plant factor. It was also more advantageous at the lower of the two solar energy conversion system capital cost assumptions.

For the solar thermal heat-engine system, the battery and thermal storage systems cost about the same, with these costs being about 27% higher than hydrogen storage at the $\$500/kW_{th}$ collector and energy transport subsystem cost, and 47% higher for the $\$100/kW_{th}$ case.

Additional findings showed that for battery or thermal storage to become the preferred storage method in terms of cost at some future date, considerable improvements in the system component values assumed here would be required. For battery systems, efficiency and cost changes which resulted in a system cost reduction equal to the price of the current technology battery would make battery and hydrogen storage costs about the same. Whether or not such a cost reduction can be achieved in the future is highly conjectural.

For the thermal storage system to be competitive with hydrogen storage, a system cost decrease equal to 50% of the current technology thermal storage component cost would be required. This reduction for thermal storage appears to be possible with large systems and high efficiency heat engines.

References Cited

1. Fujita, T., et al., "Projection of Distributed-Collector Solar-Thermal Electric Power Plant Economics to Years 1990-2000," Final Report prepared by the CalTech Jet Propulsion Laboratory for the U.S. Department of Energy, DOE/JPL-1060-77/1, Pasadena, California, December 1977.

2. Anon., "An Assessment of Energy Storage Systems Suitable for Use by Electric Utilities," Final Report prepared by the Public Service Electric and Gas Company, Newark, New Jersey, for the Environmental Protection Research Institute, EPRI EM-264, July 1976.

3. Tison, R.R., et al., "Advanced Coal-Using Community Systems. Task 1A. Technology Characteristics. Volume 2. Fuel and Energy Distribution and End-Use Systems," prepared by the Institute of Gas Technology for the U.S. Department of Energy, March 1979.

4. Biederman, N.P., et al., "Utilization of Off-Peak Power to Produce Industrial Hydrogen," Final Report prepared by the Institute of Gas Technology for the Environmental Protection Research Institute, EPRI 320-1, August 1975.

5. Tison, R.R., et al., "Wind-Powered Hydrogen Electric Systems for Farm and Rural Use," Final Report prepared by the Institute of Gas Technology for the National Science Foundation, NSF/RA-766184, April 1976.

The Conventional Power Source Interface

In common practice, the electrolyzer, which for a given hydrogen output rate appears as a constant-current variable-voltage load, is connected to the AC power grid. The grid, however, in the ideal sense, is a constant voltage source with infinite current capabilities. Since this does not match the electrolyzer's needs, a control interface--in addition to AC-to-DC conversion--must also transform the power source such that it appears as a controlled source. This transformed source could be modeled as either a controlled voltage or controlled current source using either voltage or current as the controlling reference. For the purpose of this discussion, and given that the electrolyzer needs a form of current control (e.g., via voltage control), we have elected to model the source as a voltage-controlled current source. (See Figure B-3.) The selection of how the control voltage is generated is a specific design choice. One common method is to generate the reference voltage via a current sensor in the AC circuit feeding a Silicon Control Rectifier bridge.

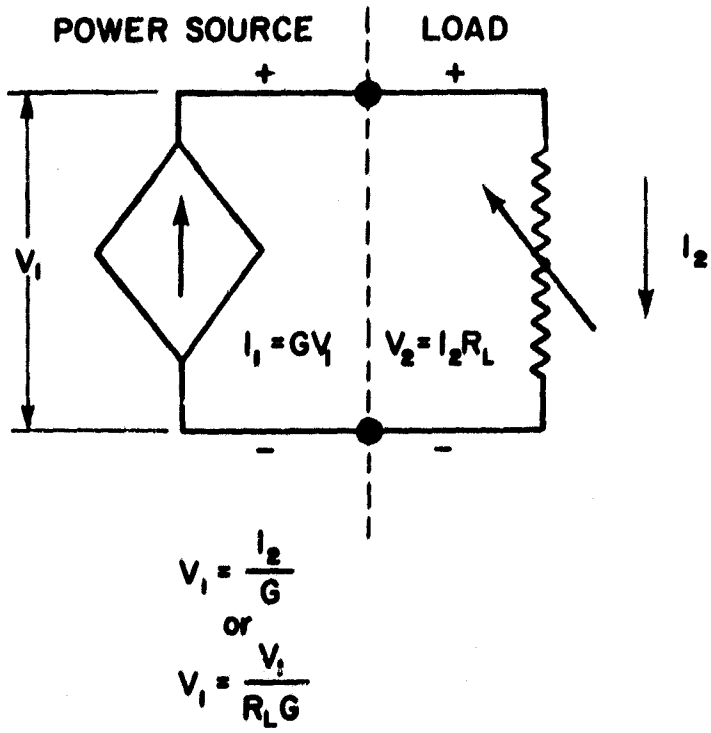

Figure B-3. AN IDEALIZED POWER SOURCE WITH AN IDEALIZED ELECTROLYZER AS A LOAD

The Unconventional Power Source Interface

The interface of the electrolyzer with unconventional power sources, such as solar-to-electric systems, adds an additional variable to this interface control. As with the conventional case, the power source must be transformed such that it appears as a controlled current source. The difference is that the reference voltage (assuming voltage coltrol) must also reflect the power available, since the source is now a variable power source rather than an "infinite" or constant power source.

Rotating Machines

If more or less conventional constant-speed, rotating, electrical generation equipment is employed in the unconventional power source, angular velocity (RPM) sensors might be employed to obtain the additional reference. (Power demand beyond system capability results in a decreasing RPM.) Caution must be exercised, however, since conventional speed control systems also sense RPM, and undesirable feedbacks could result. With solar-to-electric systems--such as solar thermal electric and hydropower--sensors in the input power stream could be used. Still another method is to design the power system such that the output voltage and corresponding current change with the power input and also match the voltage-current characteristics of the electrolyzer. This approach could simplify the power control requirements and, if the system used DC generation, could eliminate the need for conventional power control equipment and offer efficiency as well as cost advantages.

Photovoltaics

The photovoltaic solar-to-electric system is a special case. The intrinsic nature of the photovoltaic device is that it is a controlled current power source, the control in this case being the solar input level. Converting this power to AC, and allowing the solar-to-electric system to interface with the more or less conventional AC to DC power control units, does not appear to be the preferred course of action. Rather, the direct connection of the photovoltaic arrays to the electrolyzer, thereby eliminating the cost and inefficiency of power conversion equipment, is recommended.

The results of two independent experiments on photovoltaic/electrolytic hydrogen generation suggests that this match may be possible.[1,2] While

neither experiment achieved this match,* the investigators concluded that intrinsic matching was a distinct possibility. Figure B-4 shows one such projection for a photovoltaic array having a peak output of about 115 watts, coupled with an electrolyzer having four cells. The electrolyzer used was the "Elhygen-R" hydrogen generator manufactured by Milton Roy Co. Its voltage-current characteristics were previously shown in Figure B-2. The photovoltaic array was a surplus Mariner IV solar panel. As can be determined from Figure B-4, the projected photovoltaic/electrolyzer operating points are within a few percent of the maximum power available, with the largest difference being about 4.6%.

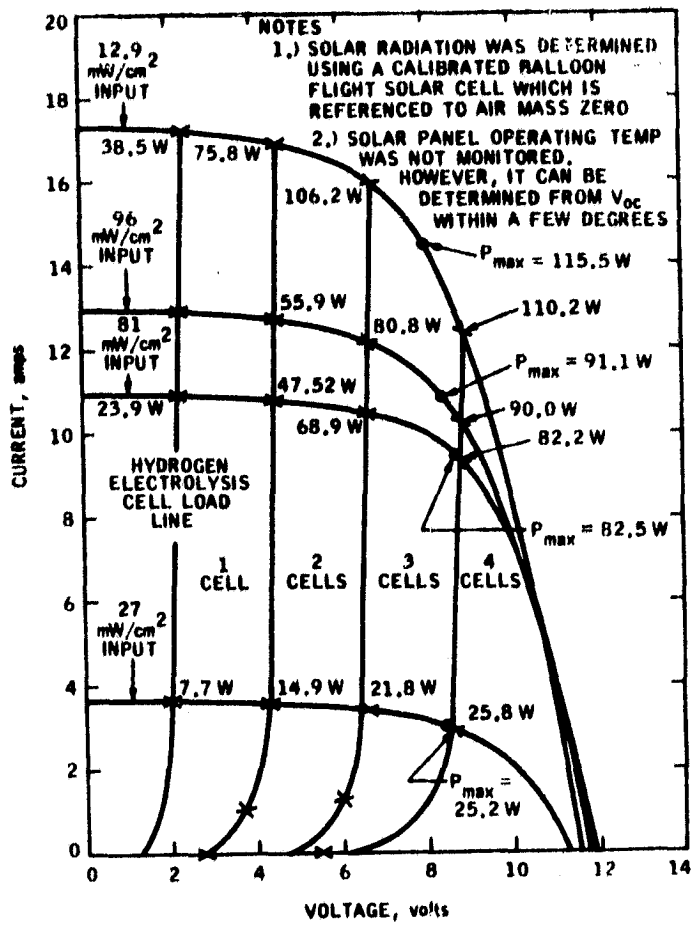

Figure B-4. SYSTEM COMPOSITE SOLAR PHOTOVOLTAIC AND HYDROGEN ELECTROLYSIS CELL INTERACTION[1]

---

* The optimum matching of the photovoltaic and electrolyzer system was not a sought-for objective in these experiments.

QUALITY

Because future photovoltaic solar/hydrogen production systems will clearly be at a larger scale than these experiments, and because the knee of the current/voltage curve for the photovoltaic arrays in these systems is broader, the photovoltaic/electrolyzer match on a larger scale was investigated. Using published data on photovoltaic arrays from Solar Power Corporation and electrolyzer polarization curves from Teledyne Energy Systems, a photovoltaic output/electrolyzer requirement voltage-current composite was assembled (Figure B-5).

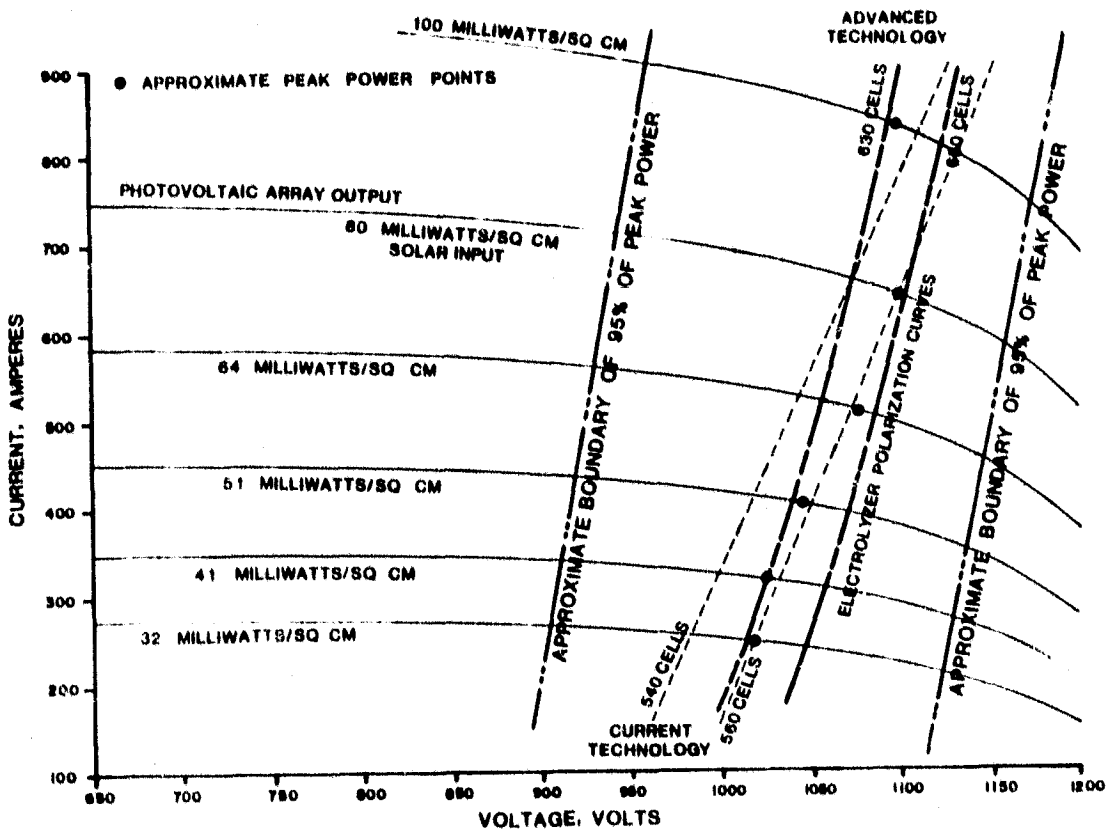

Figure B-5. VOLTAGE-CURRENT COMPOSITE FOR PHOTOVOLTAIC SOLAR/HYDROGEN PRODUCTION FACILITY

The electrolyzer selected as the photovoltaic array load consisted of several hundred cells in series (540 and 560 for the current technology system, and 630 and 650 for the advanced technology system), with active cell areas of 2 square feet and 0.9 square foot for the current and advanced tech-

QUALITY

nology systems, respectively.**

To provide the voltage/current characteristics of this load, the photovoltaic array consisted of 1400 parallel strings of 2465 series connected cells (55 millimeters in diameter). Peak power output at 100 mW/cm^2 solar intensity, 25°C ambient temperature, was calculated to be 918 kW.

Figure B-5 shows the voltage-current composite for the photovoltaic solar/hydrogen production system. Based on the calculations made, the photovoltaic/electrolyzer intrinsic match appears quite good. The relatively broad peak-power-band allows for a considerable variation in the electrolyzer's polarization curve while maintaining good power utilization over a wide range of solar input intensities. In addition, the system would tend to be self-regulating. During cold starts, the polarization curve of a cold electrolysis system would be displaced to the right of those shown in Figure B-5 and move to the left as the operating temperature increased. If for some reason the electrolysis units' polarization curve moved further to the left than normal, the current limited nature of the photovoltaic array will limit the electrolyzer current loading to a few percent over its rated load--a condition which the electrolyzer can handle provided the operating temperature does not exceed specified limits. It should be noted that the two principle causes of a left-ward movement in the electrolyzers' polarization curve is increased temperature and shorted electrolysis cells. As can be seen from the example shown in Figure B-5, the shorting of as many as 20 electrolysis cells would have little effect on the system's loading. In the case of over-temperature, the system's temperature monitors would shut the system down before damaging current levels were obtained if in fact the photovoltaic array could provide this high current level.

** The selection of active cell area was an arbitrary design parameter in this assessment, allowing both the current and advanced technology electrolysis systems to interface with the photovoltaic array in an optimal manner. These cell areas do not necessarily represent current or future manufacturing plans.

References Cited

1. Costogue, E.N., and Yasue, R.K., "Performance Data of a Terrestrial Solar Photovoltaic Water Electrolysis Experiment," Paper presented at the Annual Meeting of the International Solar Energy Society, Los Angeles, 1975.

2. Cox, K.E., "Hydrogen From Solar Energy Via Water Electrolysis." Paper presented at the 11th Intersociety Energy Conversion Engineering Conference, State Line, Nevada, 1976.

APPENDIX IV.

SOLAR/HYDROGEN — ITS POTENTIAL MARKET SECTOR AND TECHNOLOGY COMMERCIALIZATION CONSIDERATIONS

General

The scope of study has been directed toward those solar/hydrogen production technologies with the best chance of being "commercializable" within two decades. This constraint has enabled the study to be a focused one.

Within this constraint, the study team has addressed the problems of the selections of candidate technologies. The installed costs, and cost of product, under varying financial assumptions and rules were determined for systems using those selected technologies.

This appendix will address two remaining questions. First, who are the customers that can afford to pay the indicated solar/hydrogen system and/or product prices? Second, what are the problems that must be overcome in commercializing the selected solar/hydrogen production technologies?

A. SOLAR HYDROGEN — ITS POTENTIAL MARKET SECTOR

1. Overview of the Present Hydrogen Market

Figure IV-1 places the present production of hydrogen in context with the energy consumption of the United States. While the hydrogen usage is small in national energy consumption terms, hydrogen is a critical feedstock in ammonia production, methanol production, and petroleum refining. Within the total hydrogen market, there is a small segment comprising the "Small User" hydrogen market. This market includes such uses as the synthesis of chemicals, metallurgical processing, electronic component manufacture, vegetable oil processing, and many other uses.[1] The small hydrogen user can obtain hydrogen by selecting from any one of four options:

1. Onsite steam reforming of natural gas or naphtha
2. Purchase from some nearby location where it is available as a byproduct for sale, e.g., as merchant gas by an over-the-fence pipeline

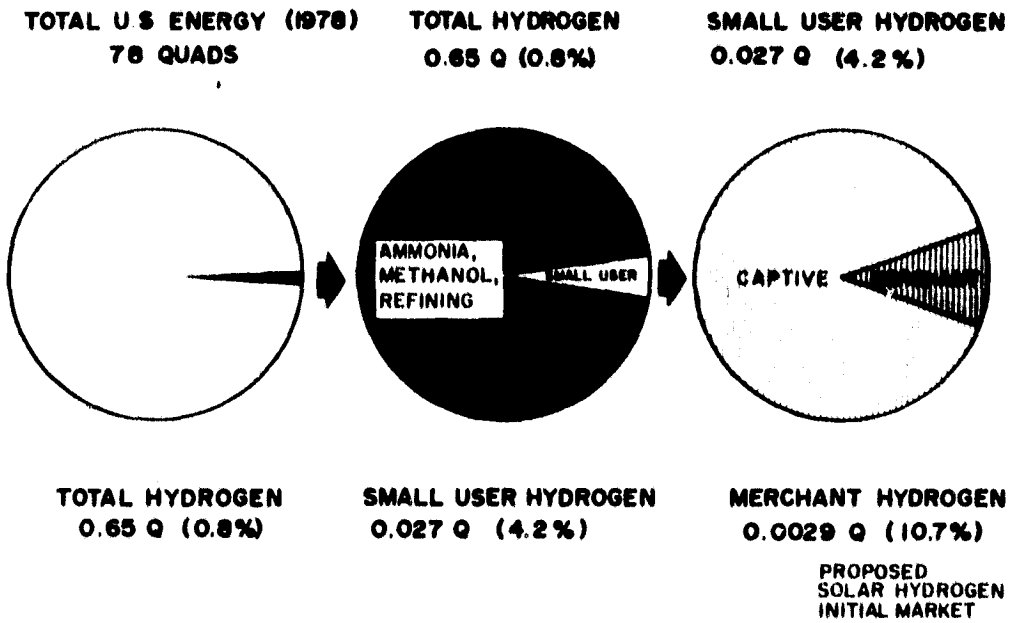

Figure IV-1. THE USE OF HYDROGEN IN THE U.S. IN CONTEXT WITH TOTAL U.S. ENERGY CONSUMPTIONS

3. Purchase from an industrial merchant gas company with delivery by truck
4. On-site electrolysis of water using grid power or on-site generated power.

As can be seen in Figure IV-2, this "small user" market sector presently pays a premium price for hydrogen.

EPRI has reported the use and pricing of hydrogen produced by the on-site electrolysis of water in competition to merchant hydrogen costs in the present time frame.[2] This comparison of cost to demand rate is illustrated in Figures IV-3 and IV-4. The hydrogen costs in $/million Btu represents the competition that projected solar/hydrogen production systems must meet to achieve commercial success.

This same analysis[2] investigated the probable future of the merchant portion of the small user market. This market is projected to expand significantly in the future as shown in Figure IV-4. Thus, the opportunity for solar/hydrogen systems to enter this marketplace is expected to be available

ORIGINAL PAGE IS
OF POOR QUALITY

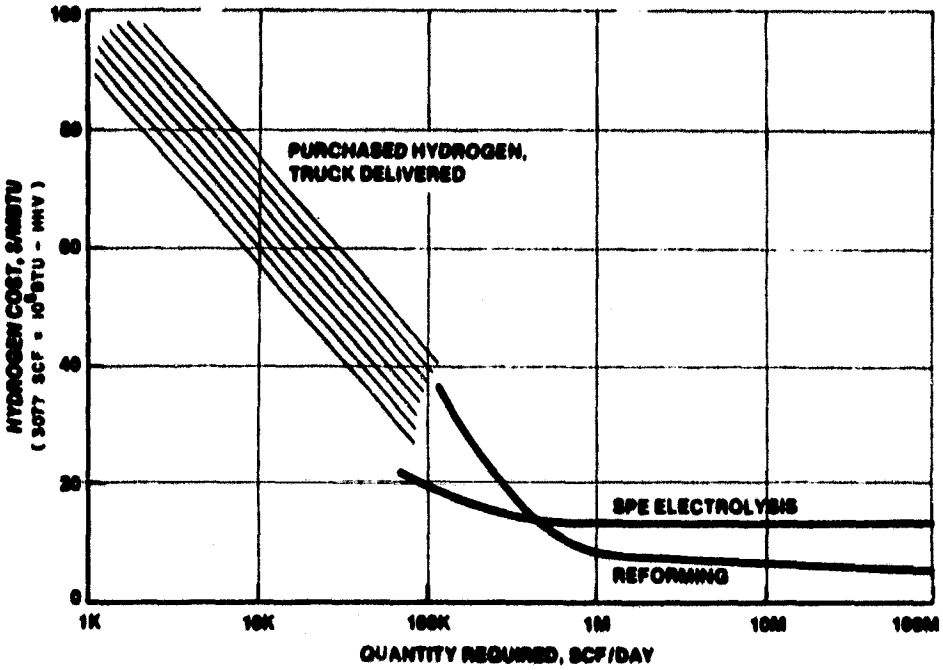

Figure IV-2. SMALL USER HYDROGEN COSTS VS. REQUIRED VOLUME[1]
(1980 dollars)

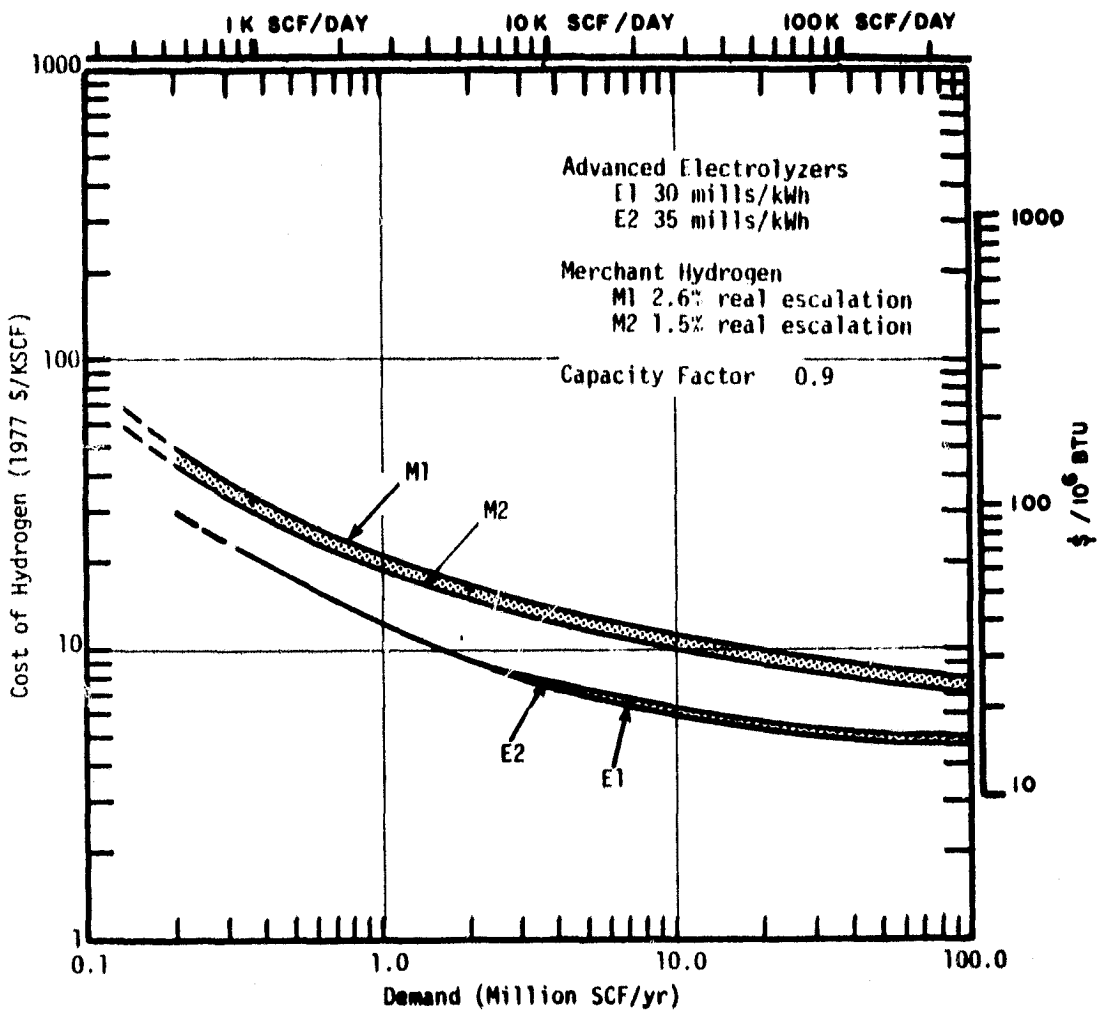

Figure IV-3. COMPARISON OF MERCHANT HYDROGEN PRICES WITH ADVANCED ELECTROLYZERS PRODUCTION COSTS FOR INDUSTRIAL USERS AS A FUNCTION OF DEMAND FOR 1980, IN CONSTANT 1977 DOLLARS[2]

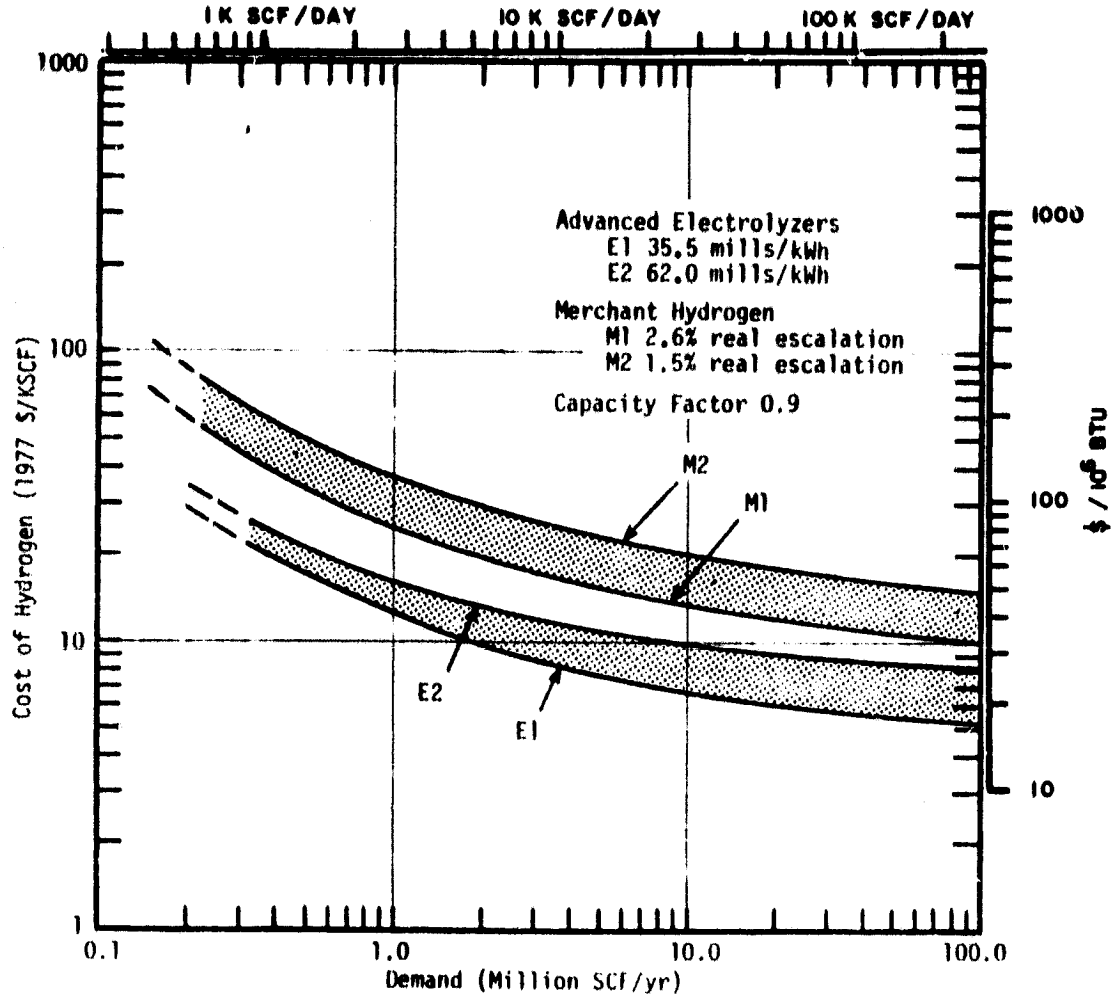

Figure IV-4. COMPARISON OF MERCHANT HYDROGEN PRICES WITH ADVANCED ELECTROLYSIS PRODUCTION COSTS FOR INDUSTRIAL USERS AS A FUNCTION OF DEMAND FOR 2000, IN CONSTANT 1977 DOLLARS[2]

for the duration of, and beyond, the time frame studied here, i.e., two decades.

2. Small User Hydrogen Market Demand and Pricing Structure

Consideration of the Small User Hydrogen Market Sector

In its recent assessment for the Electric Power Research Institute, entitled "The Market Potential for Electrolytic Hydrogen," The Futures Group, Inc., provides a picture of the small user hydrogen market in the United States.[2] Placing this sector in context with total hydrogen production and use, the report describes this market as follows:

"The largest use of hydrogen (excluding its use in petroleum refining and in the manufacture of ammonia and methanol) is for the manufacture of industrial chemicals. Chemical companies with annual hydrogen demands in excess of several hundred million SCF produce their requirements by steam reforming (most commonly of natural gas), or pipeline generally from a proximate source. There is a tendency for the larger chemical companies to consolidate their hydrogen-requiring processes at one location where either natural gas is available or there is a supply of by-product hydrogen."

"Small companies manufacturing specialty chemical products rely on merchant hydrogen, often paying premium prices to assure quality and reliability of supply. The hydrogen demand by the (small) chemical industry is projected to grow from about 49 billion SCF in 1977 to 188 billion SCF in the year 2000, following an annual growth rate of 6%."

"Five other industrial product categories represent the remainder of major small users of hydrogen: pharmeceuticals, fats and oils, metals, electronics, and float glass."

This "small user hydrogen" market constitutes less than 5% of total U.S. hydrogen production and use (approaching 85 billion SCF or 0.027 quads in 1977). However, it is both a growing market and — most significant to the solar/hydrogen potential — it is the market-sector presently paying the highest prices for hydrogen.

The projected demand through 2000 for small user hydrogen and reference statistics for 1977 are presented in Table IV-1.

Table IV-1. PROJECTED DEMAND FOR SMALL USER HYDROGEN (Billion SCF/Year)[2]

	1977	1980	1985	1990	1995	2000
Chemical	49.2	58.6	78.4	104.9	140.9	187.9
Pharmaceuticals	0.5	0.7	0.9	1.3	1.8	2.4
Fats and Oils	8.1	8.7	9.6	10.0	10.6	11.0
Metals	10.0	11.1	13.2	15.3	18.6	22.1
Electronics	2.1	2.4	3.1	4.0	5.1	6.5
Float Glass	0.9	1.0	1.2	1.4	1.8	2.1
TOTAL	70.8	82.5	106.4	136.9	178.8	232.0

In Figure IV-5, these hydrogen demand trends are plotted individually and cumulatively. A second scale is included showing the energy equivalent of this demand in terms of the higher heating value (HHV) of the product hydrogen.

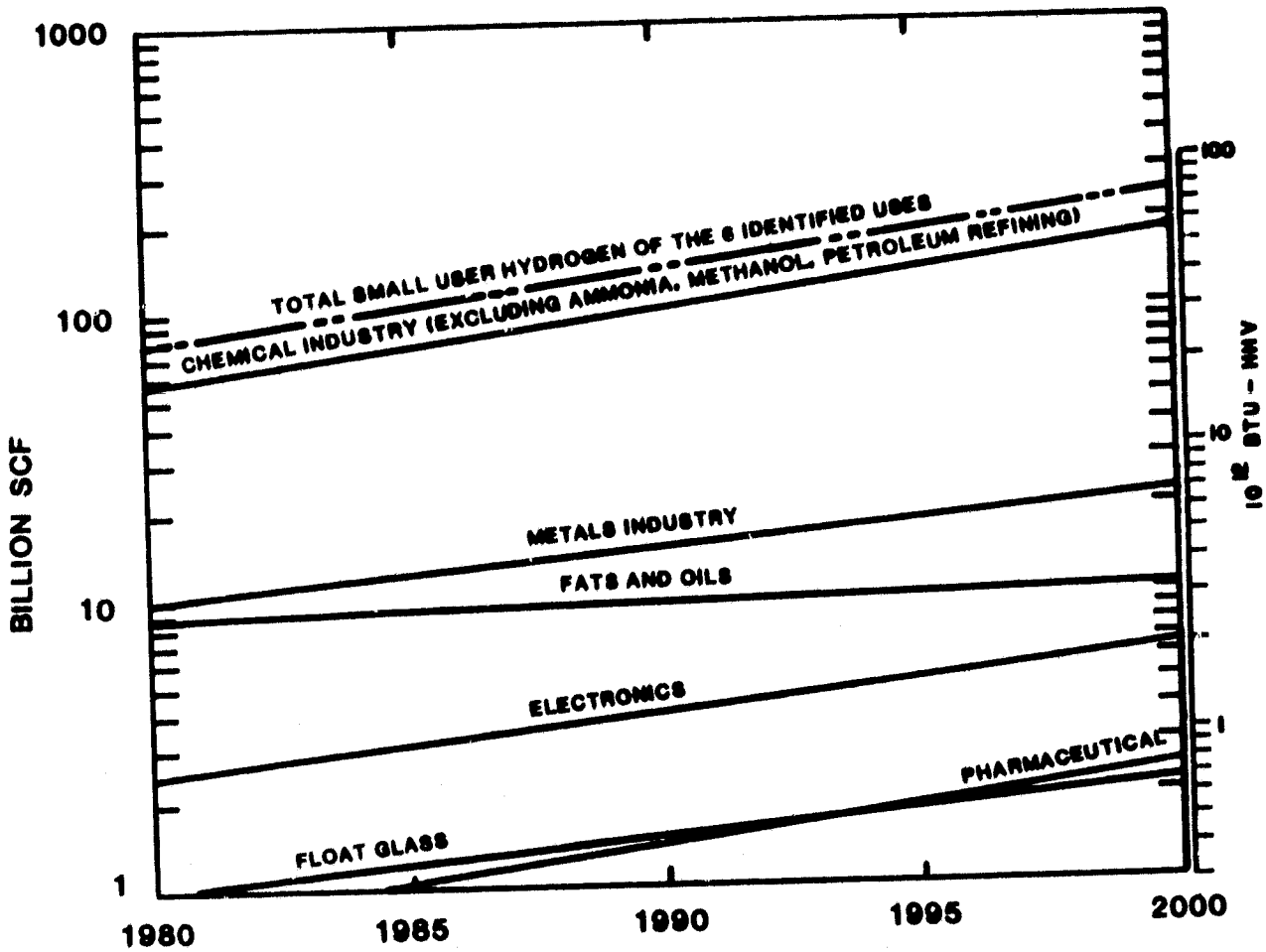

Figure IV-5. PROJECTED U.S. MARKET VOLUME FOR THE SIX IDENTIFIED MAJOR SMALL USER HYDROGEN MARKETS: 1980-2000[1]

Captive and Merchant Hydrogen in the Small User Market

At present, small user demand is met mostly by on-site, or "captive,"* hydrogen production techniques, including the steam reforming of light hydrocarbons and, to a much lesser extent, water electrolysis. Table IV-2 lists the 1977 "merchant" or industrial gas hydrogen penetration of the small user

* See Figure IV-1

categories given earlier. The total of 9.1 billion SCF comprises 13% of the total of the 70.8 billion SCF total for the identified small user market in Table IV-1.

Table IV-2. MERCHANT HYDROGEN SHARE OF SMALL USER HYDROGEN MARKET (1977)

Hydrogen Use	Billion SCF	% of Market
Chemicals	3.0	32.9
Pharmaceuticals	0.6	6.6
Foods	0.7	7.7
Electronics	2.1	23.1
Metals	1.2	13.2
Float Glass	0.7	7.7
Other	0.8	8.8
TOTAL	9.1	100.0

Figure IV-6 presents the projected merchant hydrogen market for 1980-2000 by categories of use. It can be seen that the chemicals, electronics, and metals uses are projected to be the largest customers for the small user hydrogen market through 2000. Part of this market will be served by merchant hydrogen.

Prices Paid for Merchant Hydrogen

Recalling that, today, merchant hydrogen comprises only 13% of the small user hydrogen market, it is of interest to examine the prices paid for this hydrogen. Based on the special user survey reported by The Futures Group, Table IV-3 presents the prices paid by level of product demand by individual consumers.[1] This is stated in 1977 dollars by volume and (added for the present report) in 1980 dollars per million Btu (HHV).

The method of hydrogen delivery, with some overlap reported, was reported to be approximately as follows:

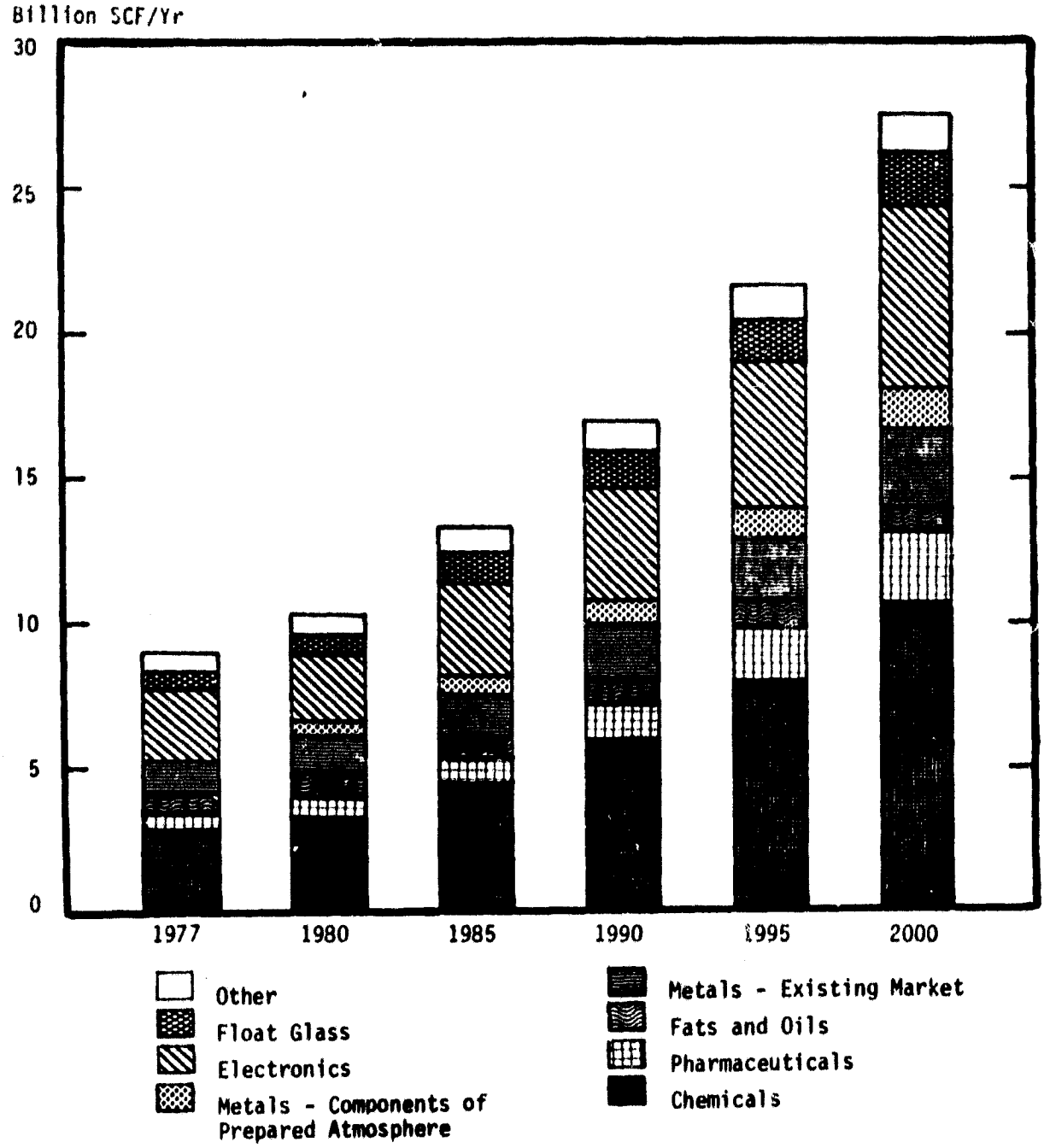

Figure IV-6. PROJECTED MERCHANT HYDROGEN MARKET[2]

QUALITY

Table IV-3. ACTUAL MERCHANT HYDROGEN PRICES PAID BY CUSTOMERS[1]

Individual Customer Demand (Million SCF/year)	Delivered Price of Hydrogen	
	1977 $/KSCF	1980 $/$10^6$ Btu
0.20	50.00-60.00	178.00-213.60
0.35	28.50	101.50
0.50	54.90	195.40
0.50	22.00	78.30
3.0	8.00	28.50
5.0	12.00	42.70
10.0	9.50	33.80
12.0	9.10	32.40
18.6	8.60	30.60
22.0	7.00	24.90
37.0	8.00	28.50
72.0	8.00	28.50
97.0	6.00	21.40
100.0	5.50-6.00	19.60-21.40
120.0	7.00	24.40
150.0	7.50-8.00	26.70-28.50
180.0	5.50-6.50	19.60-23.10
200.0	7.00-7.50	24.90-26.70

Demand Range, 10^6 SCF/year	Customer Delivery Method
0.05	Cylinder - Gas
0.5-20.0	Tube Trailers - Gas
20.0-200.0	Cryogenic Trailers - Liquid

Using the price/quantity survey results as input data, The Futures Group study team established a best curve fit:

QUALITY

$$\frac{1}{p} = 0.0583 + 0.0451 \log V \qquad \text{(IV-1)}$$

where:

p = price/1000 SCF (1977 $)

v = annual demand on 10^6 SCF/year

(The coefficient of correlation for the fit was 0.851.)

This is plotted in Figure IV-7 along with the original survey data points. A scale reflecting dollars per million Btu has been added (1980 dollars*).

Cost of Merchant Hydrogen

These prices reflect several cost components as incurred by the industrial gas companies** plus their profit on sales. The principal costs are:

- Cost of hydrogen production
- Cost of hydrogen delivery (transportation, storage, distribution)
- General cost of business-associated services, i.e., maintenance of equipment and alternative supplies for reliability, cost of sales, and other costs of an overhead nature.
- Profit.

Hydrogen production costs by natural gas steam reforming (the prevalent approach) are dependent on production plant size, feedstock, and utilities cost, and other fixed and variable costs. Reference 2 indicates the following production cost ranges:

Plant Size, 10^6 SCF/day	$/1000 SCF, 1977 $	$/$10^6$ Btu, 1980 $
1-10	3.00	10.68
10+	2.00	7.12

* A 5%/year escalation of price was assumed giving an escalation factor of 1.157 for 3 years.

** As Reference 1 notes, "Over 90% of the merchant hydrogen market is divided among three industrial gas suppliers: Air Products, Linde, and AIRCO.

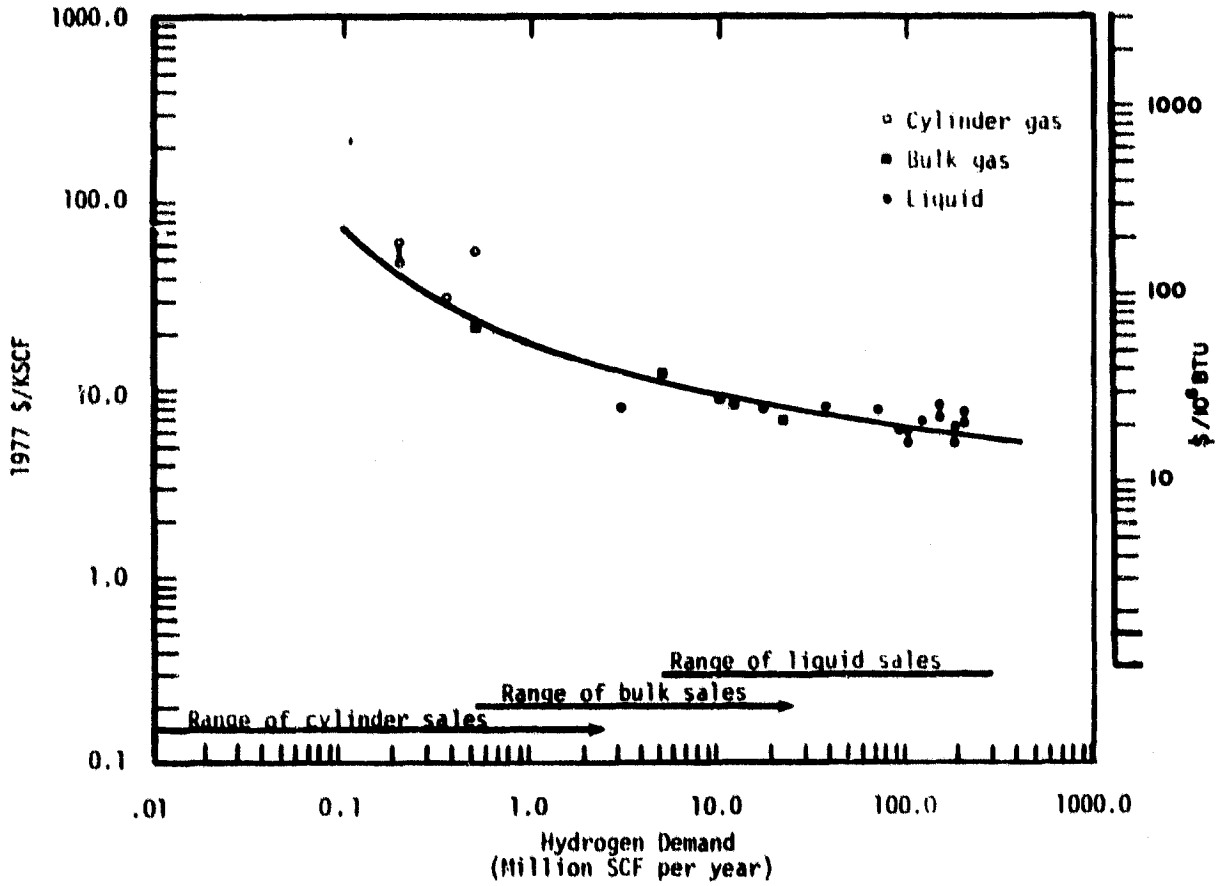

Figure IV-7. 1977 MERCHANT HYDROGEN PRICES[2]

The report further states the following about industrial gas company concerns about feedstock availability in the future:[2]

> "Anticipating the possibility of reformer feedstock curtailments, or an uneconomical escalation of feedstock prices, the merchant hydrogen producers have been examining the production of hydrogen by coal gasifiers. They do not, at this point, appear to be anxious about the availability of natural gas. Even in hard-hit states like Ohio (where natural gas sales have been curtailed) gas for the production of merchant hydrogen remained continuously available. In fact the availability of hydrogen from a merchant source is one of the major selling points that the industrial gas suppliers use to sell gas atmospheres to the metals industry. While the industry will continue to keep its options open, steam reforming probably will remain the main source of hydrogen supply for the merchant hydrogen."

Hydrogen transportation costs contribute a very significant increment to delivered price. As a light gas, hydrogen is costly to transmit as a pressurized gas because of the very low payload fraction of over-the-road tube trailer transporters.

Illustrating this, a standard gas cylinder weighing about 125 pounds stores only about 1 pound of hydrogen at approximately 2200 psig. Thus, the mass-fraction of product delivered is well below 1%, signifying high over-the-road delivery costs. This problem is characterized for bulk delivery tube trailers as follows:[2]

> "Transportation costs can add significantly to the price of merchant hydrogen . Tube trailers (costing $30,000 for 40,000 SCF capacity to $90,000 for 130,000 SCF capacity) are used to deliver hydrogen up to 200 miles, beyond which the costs become prohibitive. Average costs exclusive of the trailer costs are about $1.00 per running mile; an additional 5 cents per mile is considered a reasonable estimate for the trailer costs (41). (These costs are for deliveries of not less than 50 miles. For shorter distances an hourly rate of $25 may be used to compute delivery costs.) On-site storage would be one or more gas trailers, and charges run about $10 per month for each thousand SCF of storage provided."

Liquid hydrogen deliveries are much more efficient in this regard, but the relatively expensive liquefaction process is required (at the production plant) and sophisticated cyrogenic containers and servicing systems are required at the customer's facility.

Summary

Appendix III presented the estimated cost of product hydrogen using the four selected candidate solar/hydrogen production technologies. These costs of product were shown to be influenced by scale of implementation of the solar/hydrogen production systems, the sensitivity of the manufacturing costs of the production equipment to the volume in which it may be manufactured, and the improvements that may be made in the technologies over time.

Judged within the two decade commercialization constraint, it is not reasonable to expect solar hydrogen to be produced, and delivered, at a price competitive with conventional fuels, e.g., natural gas. Within the commodity

hydrogen sector, the price paid by users of over 100,000 SCF/day also appear to present difficult problems for solar/hydrogen systems penetration. However, for uses of less than 100,000 SCF/day, i.e., in the "small user" sector, a market opportunity for solar/hydrogen systems does appear to exist at a cost of product in the range of $25-$100/million Btu.

In the following section of this appendix, the time that remains before the year 2000, the two decade constraint, will be discussed in terms of past experiences in the development and commercialization of new technologies. A point will be made that all this time will probably be required if past experience is a valid indicator.

Yet this past experience is based on situations where the new technology offered a clear benefit, either in new capability or reduced cost of product, or in combination of both, in conventional markets. In the case of solar/hydrogen systems, the proposed new technologies do not provide a clear advantage in conventional market terms. At best, they may be competitive in site locations where advantageous solar energy resources are available and market prices that can be paid may match the capability of at least one of the four technologies.

In the opinion of the investigators, the full two decades (i.e., 1980-2000) will be required to achieve commercialization of solar/hydrogen in the small user hydrogen market sector. However, complete penetration of that market is not judged to be a practical goal within that time period. No significant penetration of the total hydrogen market can be projected by solar/hydrogen systems within that two-decade time frame. Further, no significant penetration of the national energy sector can be projected within that two-decade time frame. However, it must be noted that these conclusions are based upon conventional business practices and reliance on the general history of the time spans required to introduce new technology under more desirable circumstances; a situation that may not be representative of the problem that must be faced in the long term energy future of the United States.

The above considerations comprise the basis for the logic that led to selecting those candidate technologies that are past the research phase and well into the demonstration of actual performance capability on a significant scale. Technologies that require a longer time before even basic practi-

ability, or performance competitive to existing technologies can be demonstrated, have been rejected on the basis of the two decade study constraints and historical indications of the time required to achieve "commercialization."

B. TECHNOLOGY COMMERCIALIZATION CONSIDERATIONS

The guidelines, or constraints, that have guided this assessment effort leading to the selection of the four candidates are:

- The solar hydrogen systems should be "commercializable" in two decades. "Commercializable" is taken, for the purposes here, as meaning:
  - Basic research, development, and demonstration processes will have been completed
  - All components and/or systems will be available for purchase, though not necessarily off-the-shelf vendor items
  - The purchase will have reasonable confidence in the costs, delivery schedule, and performance quoted by the manufacturer
- The marketplace is the entire United States
- Conventional business practices are to be used
- All hydrogen uses are to be considered
- No major government interventions or initiatives (i.e., no "mega-projects"). The role of incentives can be considered
- No technological "breakthroughs" are to be assumed.

1. Time Lags in the Commercialization of Technologies

In the course of this system assessment, the investigators have encountered a wide range for the estimates of the time that would be required to bring any solar energy based hydrogen production technology to the "commercialized" status.

Study of the specific subject of "commercialization" shows that there is a limited amount of information available. Study of this subject by Mogee[3] indicates that the problem of understanding this process begins with the lack of a consistent definition of the phases comprising the total process. This problem is further compounded by the diversity of the fields of application of technology and the diverse nature of the problems to which technology is applied within these fields. In addition, the time at which the process is

initiated introduces another significant variable. Some products are ahead of their time at the original conception and lie dormant until the proper market conditions appear. Others appeared at most advantageous times and were rapidly developed using unusual methods. Examples of the latter include the aircraft gas turbine engine and the atomic bomb--technologies that would have taken much longer periods of time to develop or that would not have been developed at all in the conventional marketplace.

Mogee[3] reports on the findings of a Battelle Columbus Laboratories study completed for the National Science Foundation in 1973. In this study, the representative time lags from "first conception" (defined as being when the idea was first conceived) to "first realization" (defined as being when the product, technology or process is accepted into the marketplace), appearing to be analogous to this study's definition of "commercialization", were presented. Tables IV-4 and IV-5 summarize the findings concerning time lag as developed from nine empirical studies of the subject.

Table IV-4. TIME LAGS FROM "FIRST CONCEPTION" TO "FIRST REALIZATION" FOR NOTABLE TECHNOLOGICAL INNOVATIONS[3]

1.	Heart Pacemaker	32 years
2.	Hybrid Corn	25 years
3.	Hybrid Small Grains	19 years
4.	Green Revolution Wheat	16 years
5.	Electrophotography	22 years
6.	Input-Output Economic Analysis	26 years
7.	Organophosphorus Insecticides	13 years
8.	Oral Contraceptive	9 years
9.	Magnetic Ferrites	22 years
10.	Video Tape Recorder	6 years
	Mean Duration	19.2 years

Factors Causing Delay in Innovation

Mogee[3] cites Langrish, et al.,[4] with regard to the factors causing delay in introducing new technology:

"Langrish, et al., have studied several factors causing delay in innova-

Table IV-5. INTERVALS, DEFINITIONS, SAMPLE CHARACTERISTICS, AND FINDINGS FROM NINE EMPIRICAL STUDIES OF TIME LAGS[4]

Interval(s) Studied	Definitions	Sample Characteristics	Findings
Development	Development is period from beginning of development to large-scale or national marketing	42 consumer and industrial new products	Not applicable
Research, Invention	Research is period from point at which it can be said a new idea was crystallized to the recognition of economic potential	4 major innovations in steel and chemical industries	Research Mean = 14 yrs
	Invention is period from recognition of economic potential to the point at which development begins		Invention Mean = 4 yrs Total Mean = 18 yrs
The innovative period: from first conception to first realization	First conception is when original idea is conceived First realization is when industrially successful product, technology, or process is accepted in the market place	10 major innovations of widely-varying types	Mean = 19.2 yrs
Invention to Innovation	Invention is the earliest conception of the product in substantially its commercial form Innovation is first commercial application or sale	11 major process innovations in petroleum refining and 35 major innovations in other industries	Petroleum Refining Mean = 11 yrs S.d. = 5 yrs Other Industries Mean = 14 yrs S.d. = 16 yrs
Development: from conception to demonstration (innovation)	Conception occurs when a clear concept of the device, process or effect is apparent Demonstration (innovation) occurs with the approval of a commercial product	5 major innovations of widely-varying types	Mean = 9 yrs

Table IV-5. (continued)

Interval(s) Studied	Definitions	Sample Characteristics	Findings
Development, including incubation and commercial development	Incubation extends from the establishment of technical feasibility to the recognition of commercial potential and beginning of commercial development	20 major innovations of widely-varying types	Mean = 19 yrs
	Commercial Development begins with recognition of commercial potential and ends when the innovation is introduced as a commercial product or process		Commercial Development Mean = 7 yrs Total Mean = 26 yrs
Commercial Development	Period from the first idea for a new product to the first commercial deliveries	14 innovations in defence, electronics, and mining machinery	Mean = 4.7 yrs S.d. = 1.3 yrs
Discovery to Innovation	Discovery is the first identification of a drug's biological activity	68 pharmaceutical innovations	
	Innovation is the commercial introduction of a new drug		Mean = 5.0 yrs S.d. = 4.1 yrs
Development	Development is time required for an R&D "event" to be incorporated into a weapons system development	710 R&D "Events" contributing to 20 major weapons systems	Directed Mean = 9 yrs
	Directed research is similar to "applied" research		Undirected Often 20 years or more
	Undirected research is similar to "basic" research		

tion (see Tables IV-6 and IV-7). For the overall sample of 84 highly successful innovations, the most frequently-occurring causes of delay were the failure of a related technology to be sufficiently developed and the lack of a market or expressed need. Some types of innovations were characterized by other important delay-causing factors. Chemical innovations seem to have been plagued by the failure of management to recognize potential while craft innovations were delayed relatively more frequently by resource shortages. Table IV-7 shows that the pattern of delaying factors differs between innovations representing a large technological change and those representing a smaller technological change. Shortage of resources was the most frequent delaying factor for large changes, but was less important for small changes, a finding which seems intuitively reasonable. On the other hand, bottlenecks caused by the insufficient development of related technology was of primary importance to small change and of less importance to large change."

Table IV-6. RELATIVE FREQUENCY OF OCCURRENCE OF FACTORS CAUSING DELAY IN THE COMMERCIALIZATION OF INNOVATIONS[4]

Factors causing delay in innovation	Relative Occurrence of Factors (%)				
	Chemical n = 12	Mech. Eng. n = 40	Electrical n = 23	'Craft' n = 9	All n = 84
Some other technology not sufficiently developed	8.3	30.2	50.0	30.6	32.5
No market or need	37.5	25.4	8.7	25.0	22.5
Potential not recognized by Management	29.2	4.7	2.2	5.5	7.6
Resistance to new ideas (or over-attachment to old ideas)	4.2	16	4.3	2.8	9.8
Shortages of Resources (manpower or capital)	0	13.1	8.7	25.0	11.3
Poor co-operation or communication (Inter- and Intra-firm)	4.2	5.6	4.3	0	4.4
Not classified	16.7	5.0	21.8	11.1	11.9

Table IV-7. RELATIVE OCCURRENCE OF FACTORS CAUSING DELAY IN COMMERCIALIZATIONS AS AFFECTED BY MAGNITUDE OF TECHNOLOGICAL CHANGE[4]

Factors causing delay in innovation	Relative occurrence of factors (%)	
	Large technology change n = 11	Smaller technology change n = 73
Some other technology not sufficiently developed	16	35
No market or need	16	23.5
Potential not recognized by management	9	7
Resistance to new ideas (or over attachment to old ideas)	11.5	9.5
Shortages of resources (manpower or capital)	20.5	10
Poor co-operation or communication (inter- and intra-firm)	9	4
Not classified	18	11

2. Observations

It is suggested that the findings on commercialization of new technology, which have been presented on preceding pages, should be used as a "checklist". The problem of achieving commercialization of solar/hydrogen production technology should be viewed in the same perspectives.

With regard to the time required to achieve commercialization, the study stipulations or guideline of two decades appears to be the time period about which previous commercialization data points cluster.

With regard to the factors causing delay, rearranging Langrish's[4] findings in Table IV-6 in descending order of frequency of occurrence might provide additional guidance. Here, the study team will be a bit presumptuous, in light of the limited data available, and we will select the chemical industry examples. The result is:

1.	No market or need	37.5%
2.	Potential not recognized by management	29.2%
3.	Undeveloped technology	8.3%
4.	Resistance to new ideas	4.2%
5.	Poor co-operation or communication	4.2%
6.	Other	16.6%
7.	Shortage of resources	0.0%
		100.0%

In the previous section of this Appendix, we have addressed the market but not the need for solar/hydrogen production technology within this market. In fact, the market is presently served adequately by other production methods. Solar/hydrogen production offers no product improvement or cost of product reduction at the present time.

The factors relating to industrial management decision making, and the execution of these decisions (2,4, and 5) comprise the second largest class of cause of delay.

From the start of this assessment project, the study team assumed that the technology must be relatively well developed.

The availability of adequate financial resources has been a cause of delay in other sectors but not in the chemical industry.

The key factors that can impede the commercialization of solar/hydrogen production systems appear to be those directly related to industrial management decision making.

3. A Review of the Industrial Management Decision Making Problem

The decision-making process within industry is on the critical path between the new capabilities coming from the technological community and the eventual commercialization of any solar/hydrogen production technology. It is appropriate to review the problems faced by industrial management decision makers in such a situation.

The objective of this review is to point out those answers that can be provided by the technological community regarding the production of hydrogen

from solar energy; but more importantly, to point out those answers that cannot be provided by the technological community but which can only be answered by individual industrial organizations. This is a basic limitation implicit in the two volumes comprising this systems assessment report. The investigators can only hope to present a technological argument, taken to a common ground, cost of product, and the completion of the argument, positively or negatively, must be developed by interested industrial organizations.

Figure IV-8 presents a simplified illustration of the numerous factors that industrial decision makers must consider. Obviously, it is unnecessary to consider all of these factors in all decision making situations. However, the concept of making a major change in process technology would require consideration of all aspects in varying degrees within various real corporate organizations.

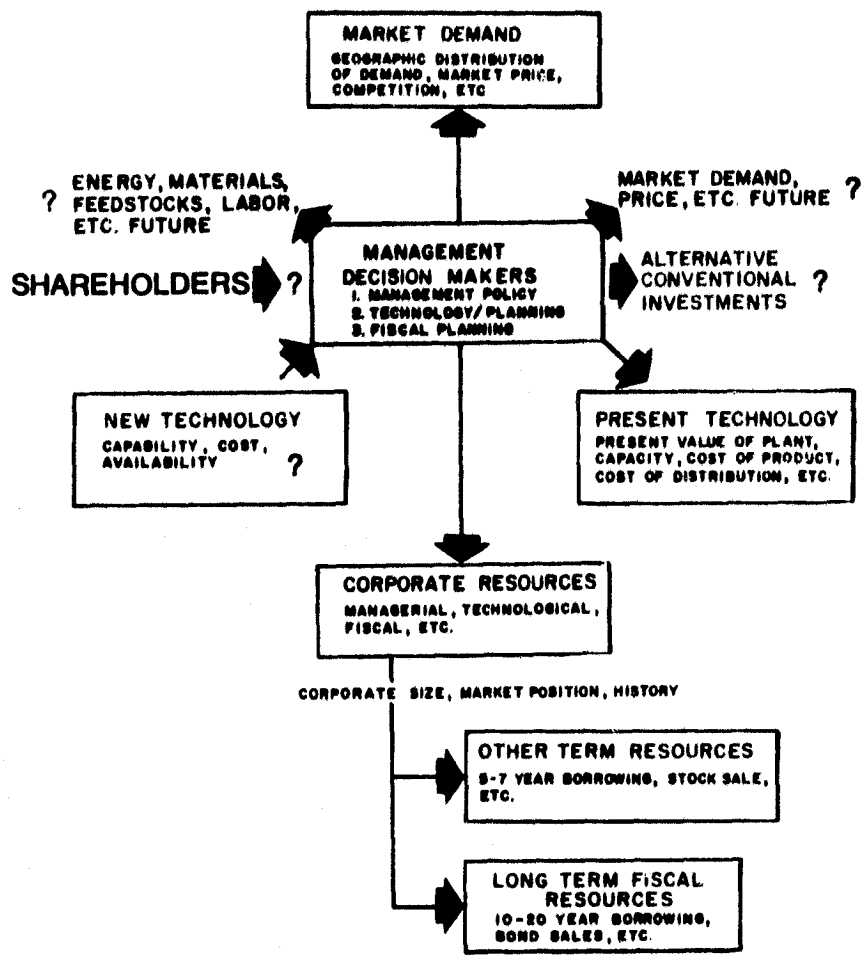

Figure IV-8. A SIMPLIFIED PRESENTATION OF THE FACTORS INFLUENCING THE BUSINESS MANAGEMENT DECISION MAKING PROCESS

The activities required to support the corporate-level decision-making process in situations of the type under discussion here may take a variety of forms and involve varying numbers of individuals, but it will require detailed knowledge on:

1. Shareholders expectations and attitudes
2. The corporate resources available for application to the continued operation of the business
3. The capability of the present plant, the costs of operation and maintenance, the invested and outstanding capital resources, the suitability to the market demand patterns, etc.
4. The alternative conventional investment options open within, and without, the corporation
5. The company's customers needs
6. The company's need for materials, purchased goods and services, available labor resources, available skills, etc.

The technological community may conjecture on these issues but it is unlikely that any useful results will come from such exercises unless they are based on real business situations. The technological community can develop new technological options and can present these options for consideration by management. This is true whether the development comes from within or without a corporation. These options can be presented in terms of their applicability to producing a product on a competitive basis. This is the approach, and the limit of the approach, presented in this assessment study.

4. Summary

In previous sections, and supporting appendices, we have attempted to develop and present the following major points:

1. That the process of "commercialization" of new technologies, using conventional business practices operating in a free market system, is a process requiring long time periods.

2. That a decision to pursue a new technology, by a large corporation, a small business, an independent innovator or an entrepreneur, is strongly based upon perceptions of the market value of the technology. This decision can be aided in some ways, and delayed in others, by government actions.

3. That, in at least one sector of the commodity hydrogen market, viz., "small user" hydrogen production, there are indications that solar hydrogen production processes may be competitive in some specific

combinations of site-specific solar resources and hydrogen market demand. Identification of the most favorable locations can best be accomplished by firms that are presently engaged in supplying these markets, including self-supplying users of (captive) hydrogen.

In the opinion of the investigators, individual initiative to change the feedstock base used by firms presently engaged in the marketing of merchant hydrogen, or organizations operating small-user captive systems, is unlikely for a number of individual reasons and for combinations of these reasons:

1. The opinion is widely held that there is an available and adequate supply of petroleum and other fossil feedstocks.

2. The uncertainty of the continued availability of natural gas, naphtha and other conventional feedstocks in the long term represents an unknown. By being an unknown, this point cannot be used as an investment justification for shifting to different feedstock bases and/or technologies. The concept only introduces an additional element of uncertainty into long range corporate planning. This element of uncertainty is insignificant in the general level of uncertainty caused by present economic conditions. Paradoxically, the level of economic uncertainty is affected by the uncertainty associated with fossil feedstock availability generally--i.e., the "energy problem". However, this problem is generally judged to be outside of the scope of consideration for conventional long-range corporate planning. Such problems are addressed by corporations only in terms of the direct threat to the corporation which can be met by actions embodied in the long-range plan which can be carried out with corporate resources in all forms (which includes supplier and supporting industry technologies). If the proposed action cannot be accomplished with projected corporate resources, no action will be included within the plan.

A further point can be raised with regard to individual corporate initiatives. An individual firm electing to shift to non-fossil derived hydrogen in the merchant gas market, or small user captive market, might place itself at a competitive disadvantage in that marketplace (with the possible exception of a small user where hydrogen use is critical but represents only a small component of total product cost in what might be a secure marketplace). Thus, it would not be logical to be "first" in making the shift; rather being "second" or "third" would be considered more prudent.

Fuel gas, or energy use, of hydrogen is not, at present, an approach viewed as practical for any business firm to consider as a subject for inclusion in long-range corporate plans. (However, special exceptions to this may exist.)

Generally, there appears to be a need, perceived by some industrial firms, to develop a reasonably accurate information base on the commercial practicality of the application of new technology to the production of small user hydrogen. Major firms in the industry have demonstrated this interest specifically in the area of the application of small-scale hydropower systems to the production of small user hydrogen.[1] As yet, this demonstration remains to be accomplished.

The justification for such industrial interest appears to be reasonably based, and appropriately timed, with the need to obtain sufficient, valid information to support logical and reliable evaluation and treatment of the technological alternatives within corporate long-range planning. The types of efforts that appear to be needed are of a "pre-long-range planning" nature. That is, their consideration in the present time-frame would appear to be of interest to selected businesses, but an "outside stimulus" may be required to bring about developments. It is in this situation that government interest and financial stimulation is viewed as necessary and appropriate.

Section IV
REFERENCES

1. Corneil, Hampton G., Heinzelmann, Fred J. and Nicholson, Edward W.S., Economics of Small User Hydrogen, Proceedings of the Symposium on Hydrogen for Energy Distribution, Institute of Gas Technology, Chicago, Illinois, July 1978.

2. The Market Potential for Electrolytic Hydrogen, Report Prepared by the Futures Group, Glastonbury, Connecticut, for the Electric Power Research Institute, EPRI Project No. 1086-4, Report No. EM-1154, Palo Alto, California, August 1979.

3. Mogee, Mary Ellen, Time Lags in the Production of Technological Innovations, Office of National R&D Assessment, National Science Foundation, Washington, DC, January 1976.

4. Langrish, J., Gibbons, M., Evans, W.E., and Jevons, F.R., Wealth from Knowledge: A Study of Innovation in Industry, John Wiley & Sins, New York, 1972 as cited in Reference IV-3.

APPENDIX V

CONSIDERATIONS REGARDING DEMONSTRATION PROGRAMS AS PRESENTED IN RAND REPORT R-1926-DOC, ANALYSIS OF FEDERALLY FUNDED DEMONSTRATION PROJECTS AND THE CHARPIE TASK FORCE REPORT

General

While the objectives of research and development programs (two different types of activities in terms of program objectives) should be familiar to the reader, the subject of Demonstration Programs, and particularly federally supported programs of this type, has only recently been subjected to study and analysis.

The first investigation of these specific types of programs was a study by the Rand Corporation supported by the U.S. Department of Commerce (Reference V-1). The results and conclusions developed by the Rand investigators were used, in conjunction with other studies in the same or similar areas, by a Task Force of investigators, the Charpie Task Force, to produce a management-oriented set of guidelines for ERDA shortly before that organization was merged into the Department of Energy (Reference V-2).

A brief discussion of the key points of these two efforts is presented here in order to provide perspective on Demonstration Programs. In the opinion of the study team, the status of the four selected solar/hydrogen systems is appropriate to initiating Demonstration Programs aimed towards accelerating their commercialization.

Rand R-1926-C, Analysis of Federally Funded Demonstration Programs

Throughout the Rand study, a general theme continually reemerges. This is that those projects involving joint participation by government and industry are more often the successful demonstration programs. Where joint involvement does not exist, the probability of success is lessened.

In pursuing any demonstration project, both the involved industry and the federal government agencies have historically attempted to achieve one or more of the following goals:

- The production of new information
- The exemplification of a technology
- The encouragement of institutional and organizational change
- The fulfillment of high-level national policy goals

Successful accomplishment of a demonstration program does not automatically imply success. The major function that is performed by a demonstration program is the reduction of uncertainty. This must be accompanied by the effective dissemination of information regarding the findings in these areas of uncertainty and the level to which this uncertainty has been reduced. In some cases, the final findings will be negative. The demonstration program will have served a purpose in showing that the technology is not practically applicable. In others, it will be demonstrated that the technology is practical and can be effectively implemented. The Rand study proposed five categories or dimensions of uncertainty:

- Technological uncertainty
- Cost uncertainty
- Demand uncertainty
- Institutional uncertainty comprised of internal and external institutional uncertainty
- Uncertainty about externalities outside the institutional system which are directly concerned with the demonstration.

The demonstration program is aimed toward full commercial application and must deal with the full range of uncertainties that affect commercial adoption or regulatory decisions.

In the particular case under study here, significant uncertainties exist in all five areas.

Definition of Demonstration Success

Three types of "success" were proposed by the Rand investigators:

- Information success
- Application success
- Diffusion success

A demonstration project is an information success if, at its completion, uncertainties about the technology, cost, demand, institutional impact and

externalities is no longer a barrier to decisions about the adoption, manufacture, regulation or subsidy of the technology. A project can be an information success if the findings are positive or negative, but regardless of the outcome, it is critical that the information regarding these findings be effectively disseminated within the affected industry.

A demonstration project is an application success if those agencies and organizations involved in the specific program are satisfied with the reliability of the system and the quality of the goods or services it delivers. This is a "local" measurement as restricted to the organizations, equipment, etc., involved in the particular demonstration program. The third measure of a demonstration's outcome is the extent to which the technology is consequently passed into general use. In the particular case represented by a solar/hydrogen project, this effective dissemination of the findings of the program to commodity hydrogen consumers or merchants is the major criteria for success.

Figure V-1 illustrates the interrelationships between participating organizations and agencies, the program objectives, the two basic processes of program planning and program operation and the information products resulting from the program operation.

Effective information dissemination is essential if diffusion success is to be achieved. The key to a good program and effective information dissemination is good project planning. A Project Management Master Plan should be developed with this specific objective, among many other objectives, in mind.

Responsibilities for Planning and Operation

As a well designed program plan can contribute to maximizing the probability of demonstration program success if it is followed, the Rand investigators studied the nature of the procedures that contributed to previous successful demonstration program plans. They concluded that planning for the operation of a demonstration program should specifically include the target groups who are expected to make use of the demonstration's result. The following guidelines were proposed:

1. Potential adopters and other target audiences should help plan the demonstration through advisory panels, or preferably as direct participants.

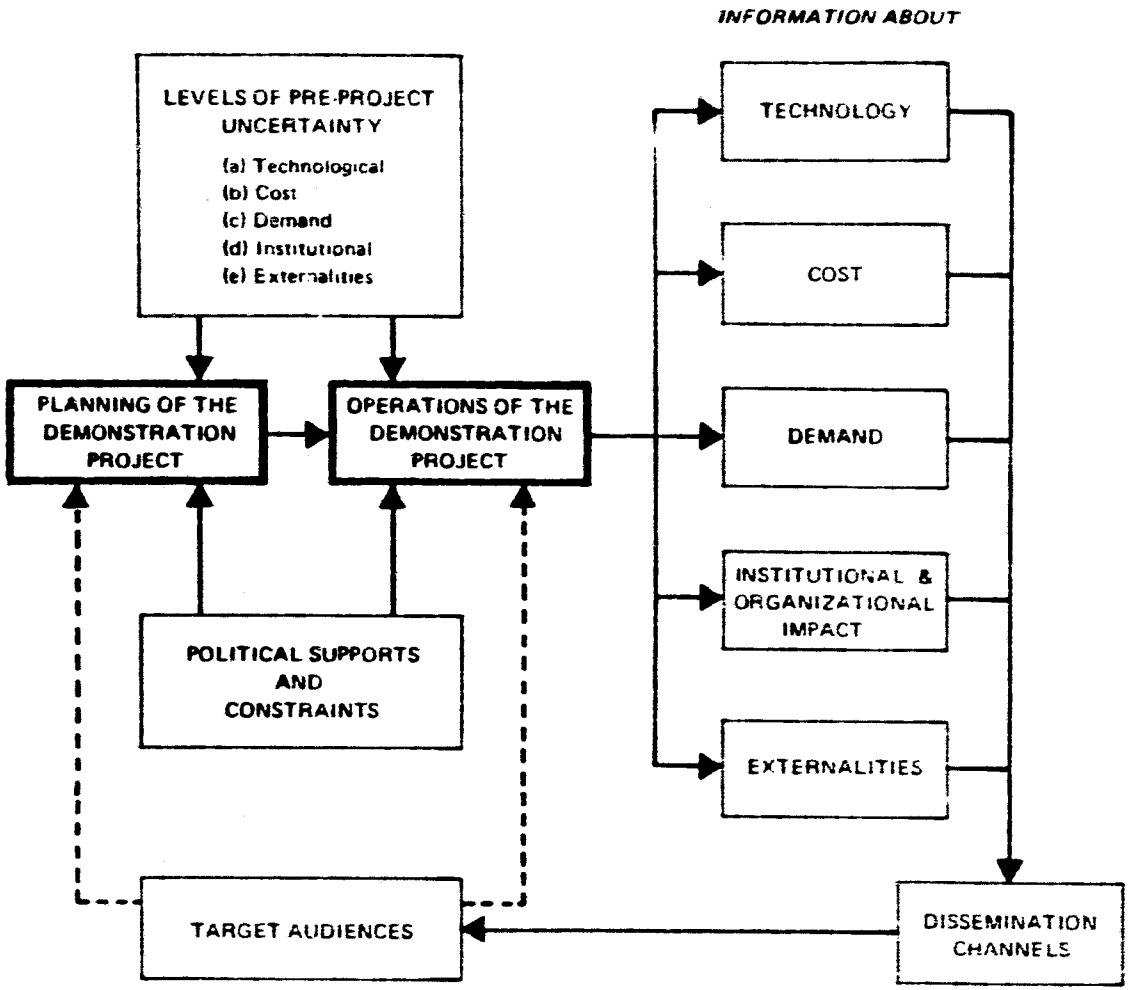

Figure V-1. INFORMATION FLOW FOR A SUCCESSFUL DEMONSTRATION PROJECT

Source: Reference V-1

2. Where substantial technological uncertainty exists, planning for the demonstration should include organizations that have conducted research and development or field tests of the technology.

3. Where resolution of external uncertainties (such as health, safety and environmental quality standards) is important, the relevant federal, state and local regulatory agencies should be directly involved in planning for the demonstration.

4. Concrete planning should be done at the local operating level with federal review, and not by the federal agency.

5. The demonstration should include private sector firms with strong incentives to become manufacturers or suppliers of the technology.

Charpie Task Force Report

The investigation performed by the Rand Corporation was presented as a general study of the problem. Its findings, conclusions and recommendations were presented in general terms and not particularly related to the programs and projects being performed by the Department of Energy. The work accomplished by the Charpie Task Force, chaired by Dr. Robert A. Charpie, interpreted the Rand findings together with the results of other supporting studies, into a set of recommendations specifically oriented to DOE activities as appropriate to RD&D programs. The initial study was prepared under ERDA sponsorship.

The Charpie Task Force recommendations were summarized and presented in two categories: first, recommendations related to the role of ERDA as a commercialization agency within the federal government, secondly, recommendations directly related to demonstration projects as incentives to commercialization:

"ERDA as a Commercialization Agency Within the Government"

1. ERDA should be reorganized so as to emphasize energy commercialization planning.

2. ERDA should avoid becoming committed in advance to particular technological solutions.

3. ERDA should avoid launching projects which would frustrate R, D and D initiatives in the private sector and terminate funding of projects which industry demonstrates it is prepared to finance with its own funds.

4. ERDA should identify a total strategy to achieve final commercialization for each major demonstration project. This requires establishing commercial as well as technical objectives for each separate project.

5. ERDA should develop a procedure for drawing on the know-how of the outside community in developing program strategies and in reaching strategic decisions which affect the course of major programs.

6. ERDA should have the prime responsibility for taking the initiative for federal government program definition and planning.

7. ERDA should seek legislative authority to provide project support, when necessary, all the way to the point of commercialization.

8. ERDA should seek as a matter of policy to maximize direct involvement in execution of major projects by the most competent organizations in the "outside" sector which are likely to be involved in any ultimately successful commercialization effort.

9. ERDA should develop procurement procedures appropriate to its role in promotion commercialization.

10. The mission of ERDA should be broadened to encompass all aspects of the commercialization of new energy sources.

11. At every level of ERDA, in connection with every program or project--large and small alike--the agency as a whole and each of its managers as an individual must believe that commercialization is the most important end result, and that commercialization by the private sector will only occur if ERDA succeeds in obtaining the maximum possible assistance from the private sector and in integrating private sector resources into every phase of the ERDA program.

<u>The Demonstration Project as an Incentive to Commercialization</u>

1. The federally supported demonstration project can play a useful role, both in accelerating the availability of new technology, and in bringing technical options to a point where they can serve as a credible hedge against future uncertainty.

2. Every effort should be made to avoid moving into the demonstration phase prematurely.

3. Demonstrating a technology which will not be economically competitive at the conclusion of the demonstration will not result in a commercial follow-on.

4. Creating conditions favorable for normal private exploitation will, when possible, be more effective than government managed projects.

5. The private sector can make important market and technical inputs to the planning of demonstration projects.

6. The terms and conditions of the relationship should be determined by an open invitation for proposal.

7. In managing its contribution to a demonstration, ERDA should be ever-mindful of its unique role in attempting to foster commercial application."

References Cited

1. Baer, W.S., Johnson, L.L. and Merrow, E.W., Analysis of Federally Funded Demonstration Projects: Final Report, prepared for the Experimental Technology Incentive Program of the U.S. Department of Commerce, Rand Corporation Report No. R-1926-DOC, Santa Monica, California, April 1976.

2. Charpie Task Force, The Demonstration Project as a Procedure for Accelerating the Application of New Technology, U.S. Department of Energy, Assistant Secretary for Research Applications, Report No. DOE/RA-003-1, UC-13, Washington, DC 20461, February 1978.