N O T I C E

THIS DOCUMENT HAS BEEN REPRODUCED FROM MICROFICHE. ALTHOUGH IT IS RECOGNIZED THAT CERTAIN PORTIONS ARE ILLEGIBLE, IT IS BEING RELEASED IN THE INTEREST OF MAKING AVAILABLE AS MUCH INFORMATION AS POSSIBLE

Final Report RSC 3337

80-10266

# JSME SCATTEROMETER DATA PROCESSING

NASA CR-160577

"Made available under NASA sponsorship in the interest of early and wide dissemination of Earth Resources Survey Program information and without liability for any use made thereof."

By

Billy V. Clark
Richard W. Newton

(E80-10266) DEVELOPMENT AND EVALUATION OF SCATTEROMETER DATA PROCESSING ALGORITHMS Final Report (Texas A&M Univ.) 153 p HC A08/MF A01 CSCL 05B
N80-29813
Unclas
G3/43 00266

August 1979

Principal Investigator: Richard W. Newton

Supported by
National Aeronautics & Space Administration
Contract NAS 9-14875

TEXAS A&M UNIVERSITY
REMOTE SENSING CENTER
COLLEGE STATION, TEXAS

## Acknowledgment

Sincere appreciation is extended to Dr. Kumar Krishen of NASA Johnson Space Center Engineering and Development Division and to Mr. Steve Reid and Dr. Jack Williams of the Lockheed Electronics Co. Inc. for their assistance and cooperation during the course of this effort. Special thanks are due Mr. Steve Reid for the extra time and effort that he contributed to the solutions of many problems that were identified, and for his efforts in providing information and explanations of radar hardware as well as laboratory calibration and in-flight procedures.

## TABLE OF CONTENTS


| | Page |
|---|---|
| List of Figures | ii |
| 1.0 Introduction | 1 |
| 2.0 General System Description | 6 |
| 3.0 General Radar Equation Solution | 13 |
| 4.0 Doppler Frequency Shift Corrections | 16 |
| 4.1 Effect on Range and Area Computation | 16 |
| 4.2 Effects on Usage of Antenna Gain and Roll-Off Filter Functions | 20 |
| 4.3 Low Viewing Angle Effects | 20 |
| 5.0 Ground Resolution Cell Size | 22 |
| 6.0 Comparison of General Program Structures | 25 |
| 6.1 NASA/JSC General Program Structure | 27 |
| 6.2 TAMU General Program Structure | 30 |
| 6.3 Comparison of Processing Results | 32 |
| 7.0 TAMU Complex Digital Fourier Transform System | 34 |
| 7.1 Advantages of New System Over Hilber Transform System | 34 |
| 7.2 CDFT Algorithm Summary | 41 |
| 8.0 References | 51 |
| Appendix A - Flow Charts for Hilbert Transform Processing System | 52 |
| Appendix B - Viewgraphs of September 1977 | 67 |
| Appendix C - Listing For Program SCATTER.CZTA78 | 81 |
| Appendix D - Remote Sensing Center Technical Memorandums RSC-159 and 160 | 107 |

## LIST OF FIGURES


| Figure | | Page |
|---|---|---|
| 1 | Simplified flow diagram of the first step of the radar data processing procedure - Data Digitization . . . . . | 7 |
| 2 | Simplified flow diagram of the second step of the processing procedure - Sigma Zero Computation . . . . . | 9 |
| 3 | Simplified flow diagram of the third step of the data processing procedure with indication of the type of ouput product available . . . . . | 10 |
| 4a | Simplified flow diagram of program SCATTER.CZTA78 . . . . . | 11 |
| 4b | Antenna gain, beamwidth and roll-off function modules are loaded into main program Scatter at time of program execution for the frequency and polarization combination being processed . . | 12 |
| 5 | Effect of discrete nature of the DFT on filter center frequency and bandwidth . . . . . | 18 |
| 6 | Bandwidth and frequency limits at low viewing angles . . . . . | 21 |
| 7 | Viewing angle limits as a function of roll angle and drift angle . . . . . | 23 |
| 8 | Illustration of the ground cell length defined at TAMU . . . . . | 24 |
| 9 | Illustration of the ground cell length as defined by NASA/ESD . . . . . | 26 |
| 10 | Scatterometer data processing procedure . . . . | 28 |
| 11 | General program strucutre of the NASA/JSC processing system . . . . . | 29 |
| 12 | General program structure of the TAMU Processing System . . . . . | 31 |

LIST OF FIGURES (Continued)


| Figure | | Page |
|---|---|---|
| 13 | Sign sensing techniques used by TAMU and NASA/ESD | 33 |
| 14a | Comparison of TAMU and NASA/ESD processing software using as input a common digital tape generated by NASA/ESD | 35 |
| 14b | Comparison of TAMU and NASA/ESD processing software using as input a common digital tape generated by NASA/ESD | 36 |
| 15a | Mission 347 Field 17 processed by TAMU using as input a digital tape generated by TAMU | 37 |
| 15b | Mission 347 Field 18 processed by TAMU using as input a digital tape generated by TAMU | 38 |
| 16 | Computational algorithm for computing sigma zero | 42 |
| 17 | Definition of processing coordinate system | 44 |
| 18 | Spectral arrangement of the complex digital Fourier transform | 50 |

# DEVELOPMENT AND EVALUATION OF SCATTEROMETER DATA PROCESSING ALGORITHMS

## 1.0 INTRODUCTION

In early 1976 the NASA Johnson Space Center (JSC) Earth Observation Division contracted with the Remote Sensing Center to develop and implement the hardware and software required to process raw radar measurements acquired using the 0.4 GHz, 1.6 GHz, and 13.3 GHz scatterometers to normalized radar cross section. These scatterometers had been taken out of retirement during 1976 and mounted on the NASA C-130 aircraft to be flown in support of the NASA funded Agriculture Soil Moisture Experiment (previously termed the Joint Soil Moisture Experiment).

A data processing system was developed and implemented by Texas A&M University in 1976. The processing system was structured to consist of two phases. First, digital magnetic tapes of raw scatterometer measurements and ADAS/NERDAS data were generated using the Remote Sensing Center (RSC) TI-980 mini-computer, a four channel analog-to-digital converter constructed by the RSC, an ADAS/NERDAS discriminator constructed by the RSC, and a fourteen track analog recorder supplied by NASA Johnson Space Center as government furnished equipment. These tapes were then processed to normalized radar cross section using a software package implemented on the TAMU Amdahl 470. This processing system was documented in the initial "final report" on the contract [1]. The program was

unique in that it utilized Hilbert transforms to sign sense the scatterometer data and discrete digital Butterworth filters to select the component of the return correspondence to specific incident angles. Detailed flow charts for this system are included in Appendix A.

Radar scatterometer data acquired during the 1976 Joint Soil Moisture Experiment at the LACIE supersite in Finney County, Kansas and a test site at Lawrence, Kansas was processed using this processing system in 1977. In evaluating these data several questions were raised concerning its validity. As a result, considerable effort was devoted to the evaluation of data acquisition, data pre-processing and final data processing. During this evaluation it was discovered that the analog tape recorder that had been provided as government furnished equipment by NASA Johnson Space Center (JSC) could provide only marginal performance and was inadequate for processing scatterometer data. These problems were summarized in the quarterly progress review presented at NASA/JSC on September 22 and 23, 1977. The pertinent portions of this presentation are contained in Appendix B. As a result, another more suitable analog tape recorder was provided to TAMU by NASA/JSC for processing scatterometer data.

Also during this evaluation, several other sources of error were discovered. The most significant of these were: 1) poor performance of the Hilbert transform at low incident

angles, 2) use of average flight parameters for each flight line to compute cell geometry and area, 3) poor and/or inadequate flight log documentation leading to misinterpretation of sensor parameters, 4) poor communication between sensor system engineers at NASA and TAMU leading to the use of incorrect and/or outdated sensor calibration constants, and 5) inconsistent identification of the sign and cosine channels of each scatterometer, and misleading identification of channel assignments of these signals to tape recorder tracks on the analog magnetic tape labels.

After the above mentioned problem areas were discovered and many of them resolved, NASA/JSC began to implement a software processing system in hopes of being able to process future radar data in-house at less cost. TAMU was given additional funding by the NASA/JSC Earth Observation Division to support the establishment of this software system by the Engineering and Development Division and evaluate its performance in conjunction with the continuing evaluation of the TAMU software system. TAMU was also given permission to expand its processing capability to include the newly acquired 4.75 GHz scatterometer. Within this same time frame TAMU was contracted by NASA/JSC Engineering and Development Division to develop and design a real time hardware on-board processor for the 1.6 GHz and 4.75 GHz scatterometer systems. Therefore, the hardware processor design and software processor evaluation proceeded simultaneously.

The simultaneous activities on the hardware and software processing systems proved to be extremely beneficial. Primarily as a result of the new techniques that were being developed for the hardware processor [2], two new software systems were developed for processing scatterometer data. The Hilbert transform and discrete digital filter approach was abandoned in favor of approaches that relied on discrete Fourier transforms for sign sensing and filtering. The major advantage of this approach is that the filters can be modified during data processing as a function of aircraft parameters in order to maintain constant resolution and incident angle.

One system developed by TAMU relies on real valued discrete Fourier transforms of each scatterometer quadrature channel. Sign sensing is accomplished by algebraic manipulations of each of these transforms. This system is identical in processing procedure to the system developed by NASA/JSC. The other processing system developed by TAMU has the identical processing procedure that will be used in the on-board scatterometer hardware processors. This system relies on a single complex valued discrete Fourier transform to sign sense and filter the quadrature signals [2]. This system is the best in terms of speed of operation since 1.6 GHz, 4.75 GHz, and 13.3 GHz data only half of the number of Fourier transforms must be computed. And it provides identical results.

The evaluation phase of the effort involved much personal communication between TAMU and NASA/JSC employees. The many performance tests and equation derivation verifications that were painstakingly executed will not be included in this report. Suffice it to say that agreement was finally achieved between the software processing system at NASA/JSC and the two processing systems developed at TAMU utilizing Fourier transform techniques. However, the programs developed at TAMU and NASA/JSC are not identical in their manner of construction or execution. Parameters such as resolution, integration time, percent of data utilization, etc. are different for the two processing systems. Users of scatterometer data should be aware of these differences since they could have important implications in the analysis of certain data sets.

In the following text the software processing systems developed by TAMU as a final product will be described. Differences in these programs and the NASA/JSC program will be pointed out where appropriate. It should be noted that the TAMU software system utilizing the single complex discrete Fourier transform for sign sensing and filtering operates in exactly the same manner as the TAMU design for the real time hardware processor [2].

## 2.0 GENERAL SYSTEM DESCRIPTION

The software system described in this document is the final product of the project and is currently being used exclusively for all radar scatterometer data processed at TAMU. The general processing procedures are described in Figures 1-4. The first step in processing scatterometer data is to digitize the raw radar measurements as well as the ADAS or NERDAS data stream, Figure 1. Both quadrature channels of radar measurements are digitized simultaneously for one radar frequency at a time. ADAS or NERDAS data are discriminated and digitized at the same time and a computer compatible digital magnetic tape is generated that contains the radar measurements and time correlated ADAS/NERDAS data. The digitization rate of the A/D converter is software controlled and depends on the radar frequency being digitized.

The percentage data utilization is a function of the A/D process and varies for each radar frequency. One hundred per cent utilization would mean that all of the raw radar measurements are digitized. This does not occur for either the TAMU processor or the NASA/JSC processor. However, this does not mean that the final output product does not provide continous ground coverage.

The minimum integration time of the processor is set by the record lengths and A/D rate used during the A/D conversion process. Both the TAMU and NASA/JSC processor use the

STEP 1: Data Digitization

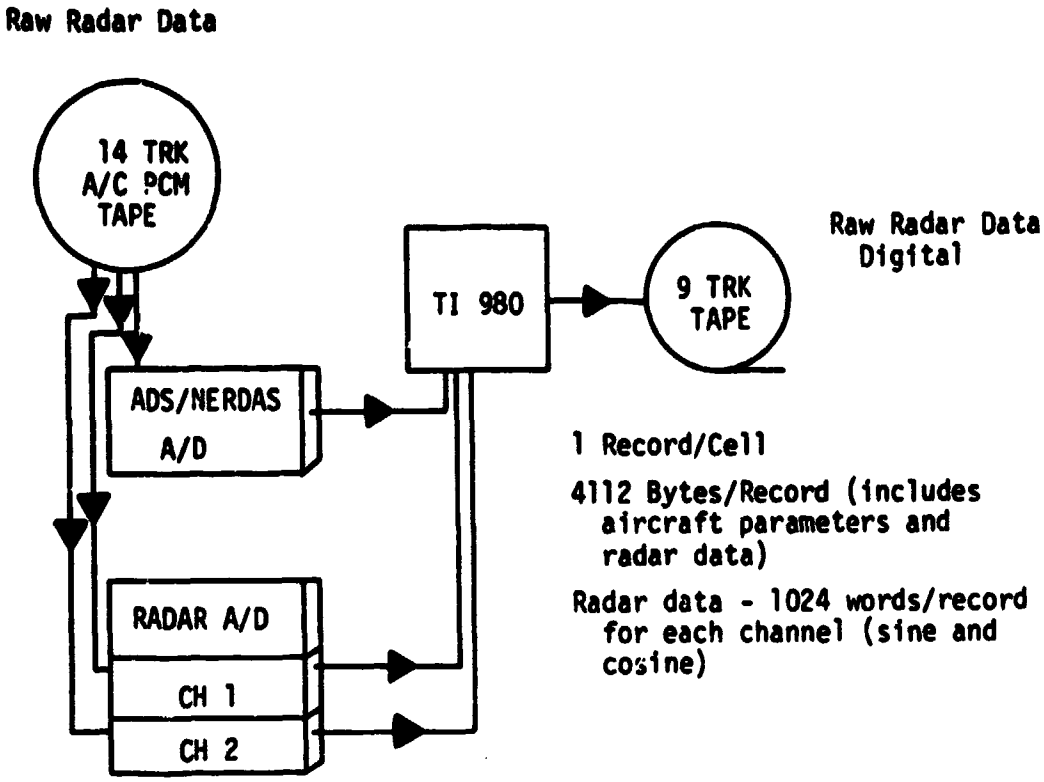


ADAS/NERDAS: Time, altitude, velocity, pitch, roll, drift

| RADAR | Frequency | A/D Rate | Percentage Data Utilization |
|---|---|---|---|
| | 13.3 GHz | 25 KHz | 16.4 |
| | 4.75 GHz | 10 KHz | 37.2 |
| | 1.6 GHz | 5 KHz | 51.2 |
| | 0.4 GHz | 2.5 KHz | 68.2 |

Figure 1. Simplified flow diagram of the first step of the radar data processing procedure-Data Digitization.

same record lengths and A/D rates. The minimum integration time determines the smear distance of a resolution cell. Although the basic integration times are the same between NASA/JSC and TAMU, NASA/JSC defines resolution differently than TAMU thereby causing the actual ground coverage obtained from the two processing systems generally to be different. This is discussed later.

Each radar frequency and polarization combination must be digitized individually. When this is complete, the 9 track computer compatible tape is used to input the digital data to the TAMU Amdahl 470 computer where the main processing software resides. The Amdahl 470 processes the measurements to normalized radar cross section using the program SCATTER.CZTA78 and produces both punched card and line printer output (Figure 2). The processed data are then put into report format for distribution using the TI-980 minicomputer, plotted for analysis purposes, or averaged as desired (Figure 3).

The principal component of the processing system is the program SCATTER.CZTA78. This program sign senses, filters, and computes the normalized radar cross section. A general flow chart of this program is shown in Figure 4.

In evaluating the processing system, each step of the process was investigated individually. The accuracy of the digitization process was tested and the ADAS and NERDAS

STEP 2: Sigma Zero Computation

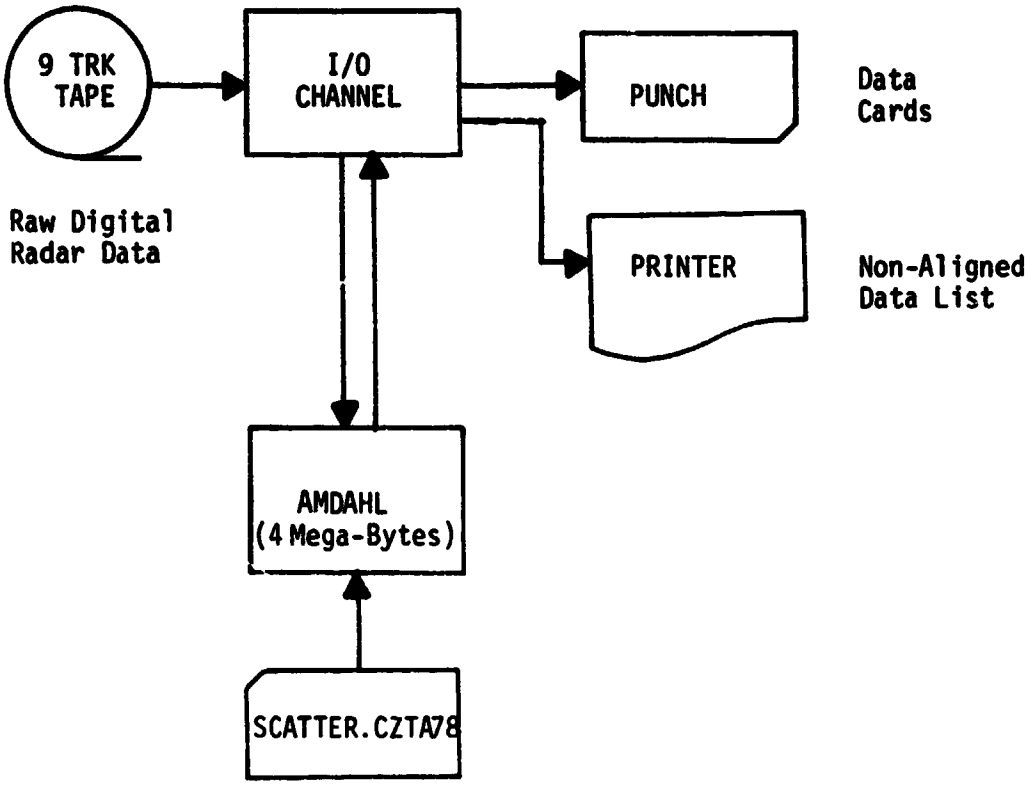


Figure 2. Simplified flow diagram of the second step of the processing procedure - Sigma Zero Computation.

STEP 3: Output Product Production

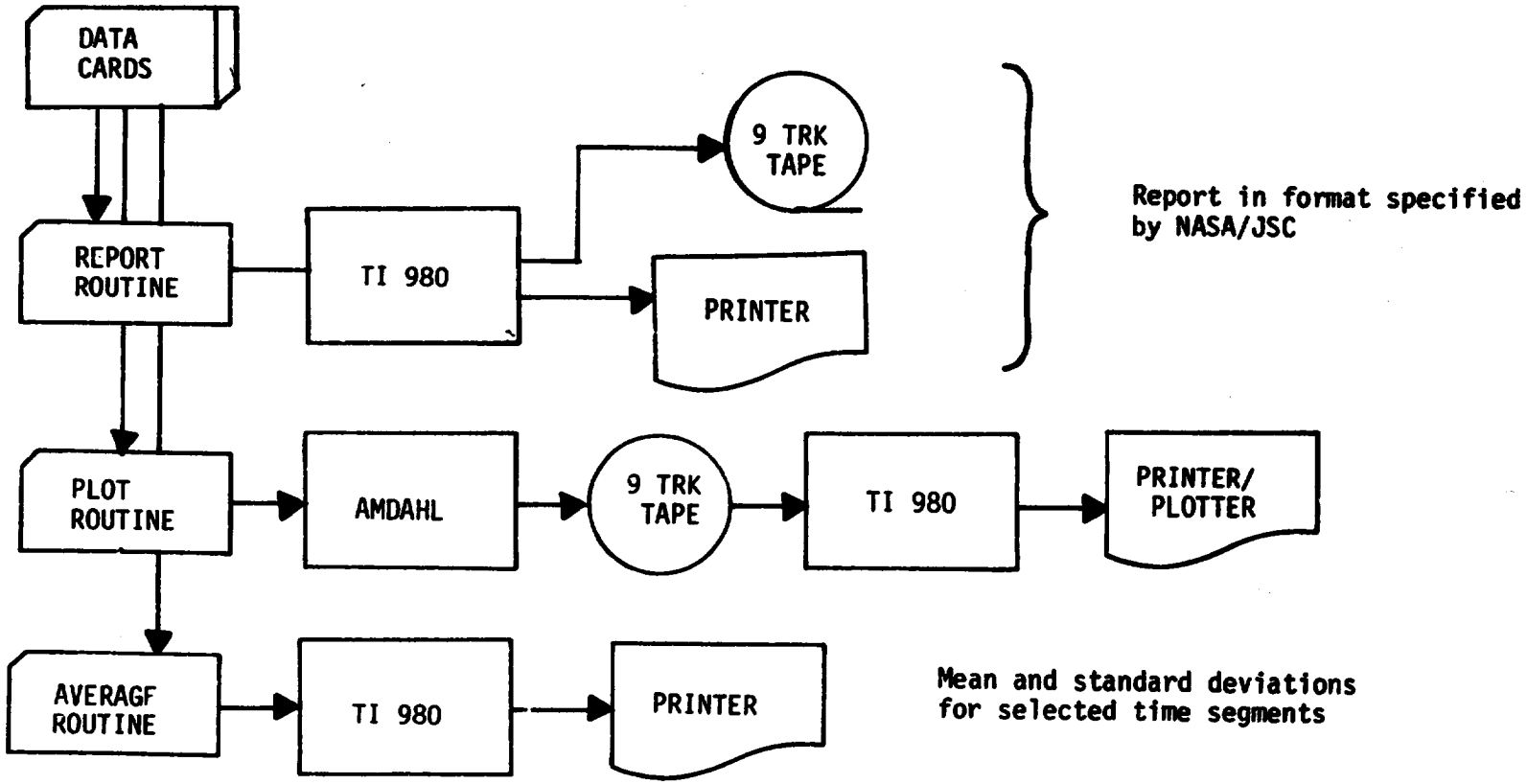


Figure 3. Simplified flow diagram of the third step of the data processing procedure with indications of the type of output product available.

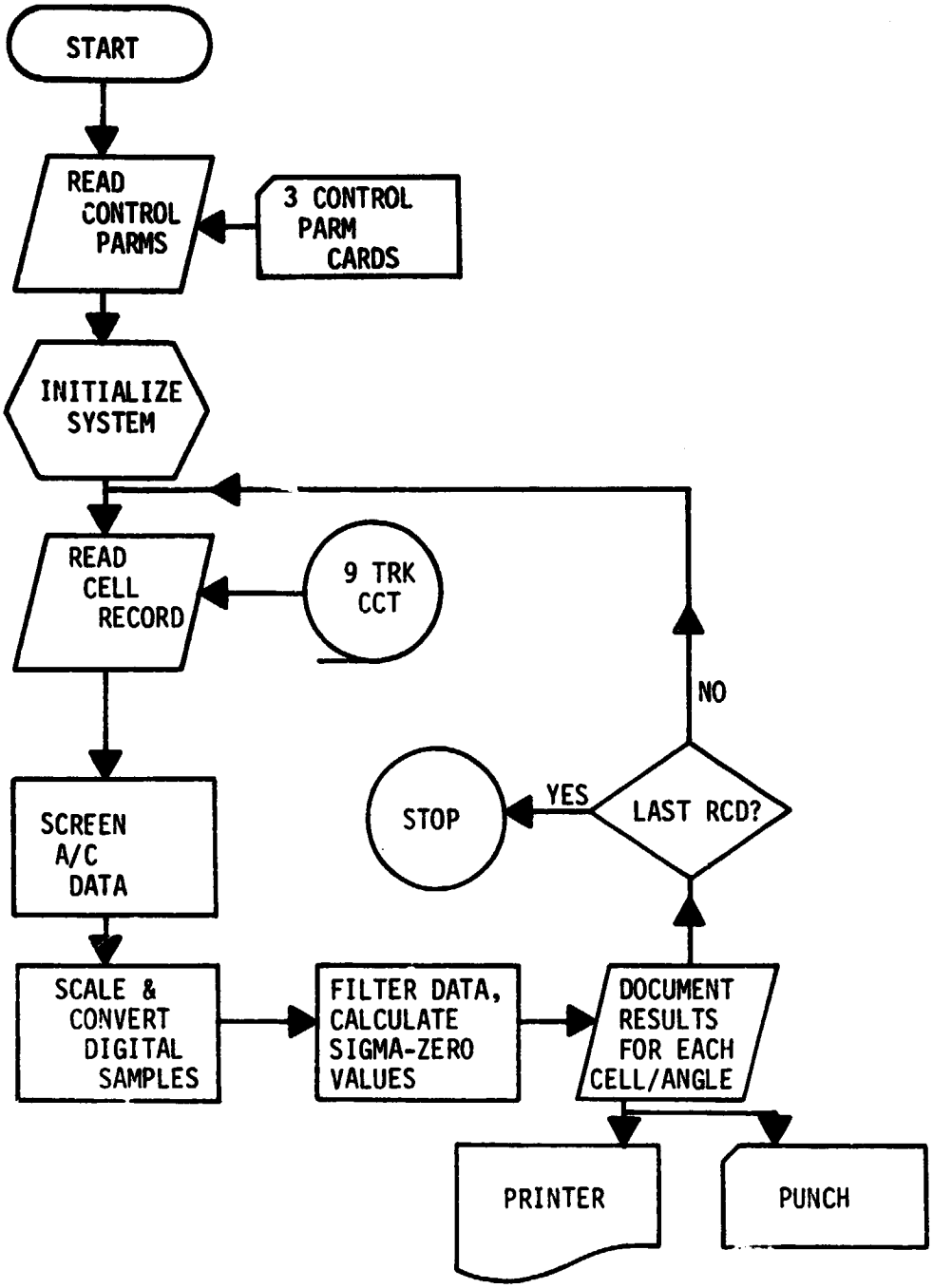


Figure 4a). Simplified Flow Diagram of Program SCATTER.CZTA78

**Main Program Module:**

**Gain, Beamwidth, Gamma Modules**

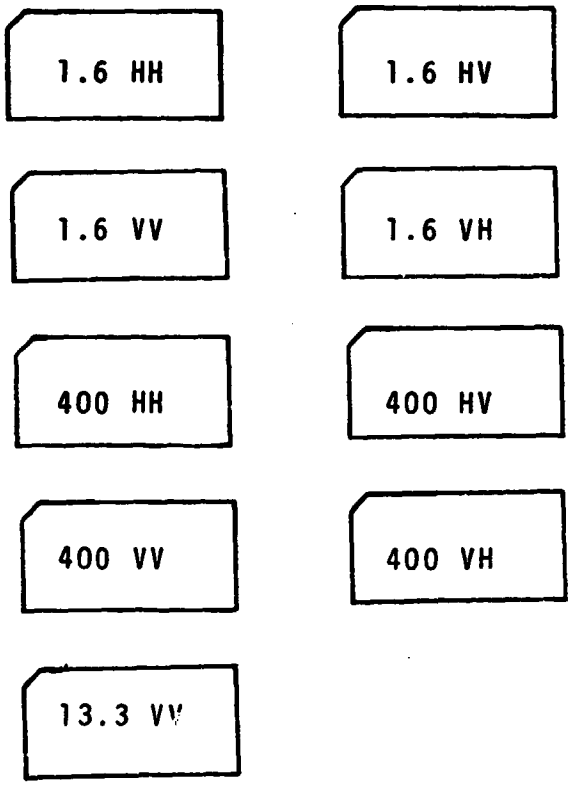


Figure 4.b) Antenna gain, beamwidth and roll-off function modules are loaded into main program Scatter at time of program execution for the frequency and polarization combination being processed.

discrimination tested. These were found to work satisfactorily and compare to NASA/JSC results for the same input data. The quality of the 9 track digital tape is tested each time a set of radar data are processed by executing a fast Fourier transform of the first few records and comparing the spectrum to that observed (and photographed) on the analog spectrum analyzer when the analog tapes are digitized. All of these functions proved to be satisfactory after the original analog tape recorder problems were rectified.

The major effort in the evaluation process proved to be the validation of the main program component, SCATTER.CZTA78. This program basically evaluates the radar equation as given by equation (1) for the normalized radar cross section. The assum tions upon which equation (1) is based were evaluated, and the techniques and accuracy of computing each of the terms in equation (1) were evaluated. The details of each of these evaluations will not be given, only a summary of several major points.

## 3.0 GENERAL RADAR EQUATION SOLUTION

At the outset of this report period two forms of the general radar equation were used to estimate the radar cross sections, $\hat{\sigma}^o$, from the scatterometer measurements. At TAMU the form used is

$$\hat{\sigma}^o = \frac{(4\pi)^3}{\lambda^2} \frac{C_L}{K_s} \frac{Z(f)}{G_r G_t} \frac{P_r}{P_t} \frac{R^4}{A} \tag{1}$$

where $\lambda$ = wavelength

$C_L$ = cable loss

$K_s$ = system constant, calibration

$Z(f)$ = roll-off function

$G_r G_t$ = antenna two-way gain

$P_r$ = receiver power

$P_t$ = transmitter power

$R$ = range to ground cell in view

$A$ = area of ground cell in view

At NASA/JSC the form used was

$$\hat{\sigma}^{\circ} = \left(\frac{4\pi}{\lambda}\right)^3 \left(\frac{C_L}{K_s}\right)\left(\frac{H^2 V}{G_r G_t Z(f)}\right)\left(\frac{E_r}{E_t}\right)^2 \left(\frac{A_c}{\tan \beta/2}\right)\left(\frac{BW_c}{BW_i}\right) \qquad (2)$$

where $E_r$ = rms volts corresponding to the received bandwidth

$E_t$ = rms volts corresponding to the calibration bandwidth

$H$ = aircraft altitude

$V$ = aircraft velocity

$A_c$ = $\cos\left(\frac{\Delta\theta}{2}\right) \cos\psi \cos\phi$

$\beta$ = antenna beamwidth

$BW_c$ = bandwidth of the calibration signal

$BW_i$ = instantaneous bandwidth corresponding to the $i^{th}$ incident angle

$\psi$ = roll angle

$\phi$ = drift angle

The two expressions are related and equivalent if it is assumed that the ground cell area, A, in equation (1) is given by

$$A_i = \frac{BW_i \tan \beta_{1/2} H^2}{V \cos^4 \theta_i \cos\left(\frac{\Delta\theta}{2}\right)} \tag{3}$$

where

$\theta_i$ = instantaneous viewing angle to the $i^{th}$ ground cell

$\Delta\theta$ = the angular width corresponding to the $BW_i$

The above assumption which connects equation (2) to equation (1) is, unfortunately, valid only if the value of roll and drift remain equal to zero. This is almost never true, therefore, the authors of the orginal NASA/JSC system were forced to make another assumption to cover this situation; i.e., in the presence of aircraft roll and drift the area becomes

$$A_i' = A_i / \cos\psi \cos\phi \tag{4}$$

The validity of the above assumptions was extensively analyzed at TAMU [3]-[4]. It was found that equation (3) (first assumption) was accurate to within ±1% for the case where $\phi=\psi=0$; however, for $\psi\neq0$, $\phi\neq0$, equation (4) (second assumption) yielded erroneous values of ground cell area which were off by as much as 7% for nominal aircraft perturbations. On the basis of these analyses it was concluded that the more general form

of the radar equation, expression (1) above, would be the best form to use for data processing.

The results of this analysis also showed that the area calculation should be done using the expressions and techniques that have always been used at TAMU; i.e.,

$$A = \frac{W'(Y_2 - Y_1)}{\cos\phi} \tag{5}$$

as defined in reference [4]. The NASA/JSC program was modified to compute area in the same manner for purposes of consistency between the two software processors and the hardware processors which are being implemented.

## 4.0 DOPPLER FREQUENCY SHIFT CORRECTIONS

### 4.1 Effect on Range and Area Computation

The value of $R^4/A$ (equation (1) above) obviously makes a substantial contribution to the value of $\hat{\sigma}^o$; therefore, a careful evaluation of the technique for computing these values was done. It was found that adjustments had to be made to account for doppler filter center frequency and doppler filter band-edge shifts associated with the discrete nature of the Power Spectral Density (PSD) lines. For example, the center frequency of the filter corresponding to a particular viewing angle is given by

$$f_d = \frac{2V}{\lambda} \sin\theta_i \tag{6}$$

where $\theta_L$ is the viewing angle with respect to the aircraft gravity vector. Now, as illustrated in Figure 5, this value may or may not fall as the center of one of the PSD lines. Similarly, the bandwidth, $BW_i$, is actually some integer set of PSD lines, and thus the filter band-edges do not actually fall at $fd \pm \frac{BW_i}{2}$, but in fact fall at the edge of one of the PSD lines. The true bandwidth may be calculated as

$$BW_t = [BW_i/\Delta f + 0.5]_I \Delta f \tag{7}$$

where the notation $[\ ]_I$ means taking the integer value, and $\Delta f$ is the spectral line width given by $\Delta f = f_s/N$ where N is the number of lines in the PSD and $f_s$ is the sample frequency used by the A/D converter. The true center frequency is then given by

$$fd_c = \Delta f [fd/\Delta f + 0.5]_I \tag{8}$$

whenever the expression

$$NF_i = [BW_i/\Delta f + 0.5]_I \tag{9}$$

is odd, and by

$$fd_c = \Delta f \left[ [fd/\Delta f + 0.5]_I + 0.5 \right] \tag{10}$$

whenever $NF_i$ is even.

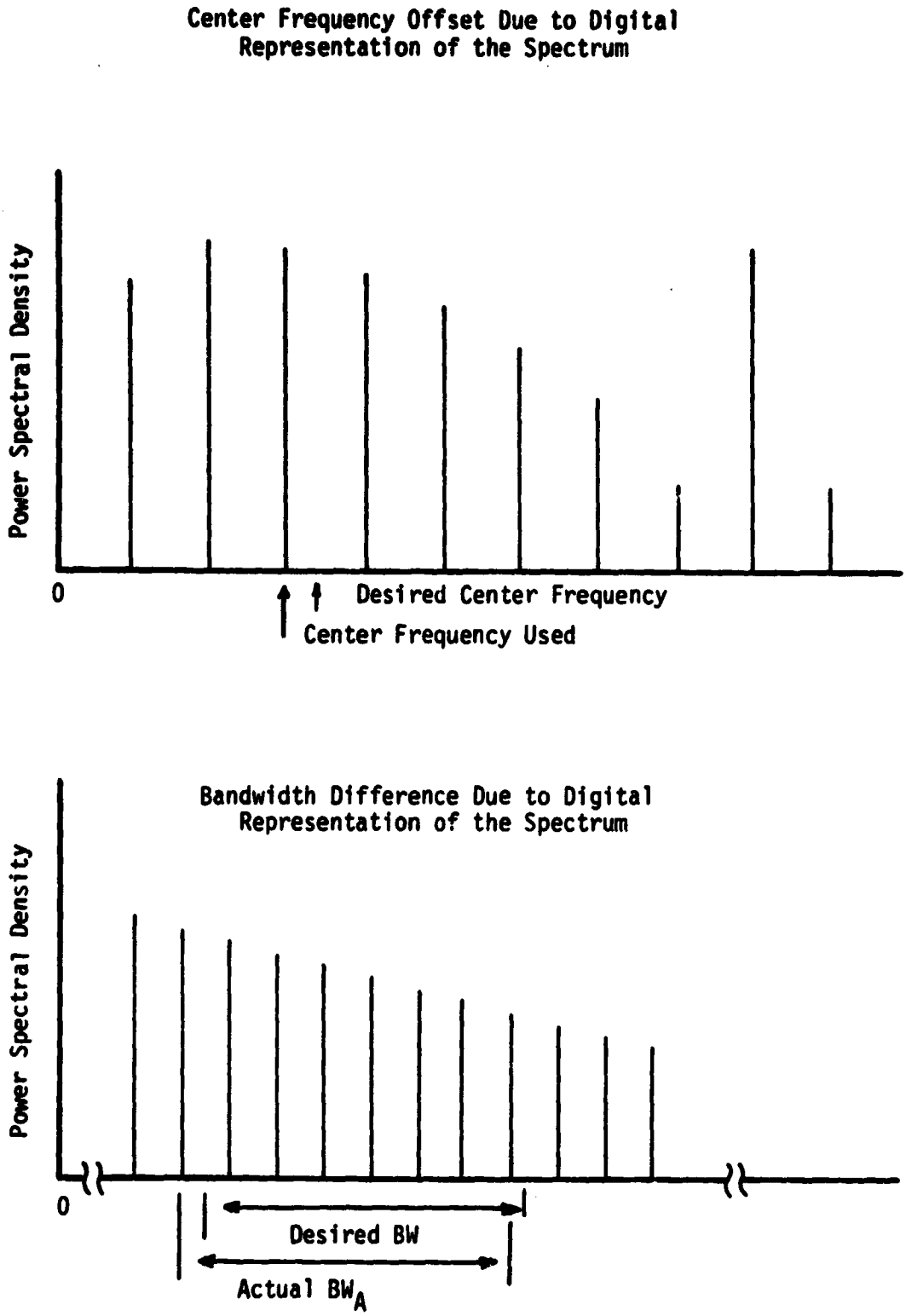


Figure 5. Effect of discrete nature of the DFT on filter center frequency and bandwidth.

Note that at most, the center frequency or the band-edge will be off by $\Delta f/2$. The influence of this perturbation on the value of range, R, can be evaluated. Range is given by

$$R_i = H \tan \theta_{Li} \tag{11}$$

Since $\theta_{Li}$ and $f_d$ are related to equation (6), we can write

$$\frac{R_i'}{R_i} = \frac{\tan \theta_L'}{\tan \theta_L} \tag{12}$$

where $R_i'$ is the range to the repositioned ground cell with the center frequency off by $\Delta f/2$. It can be shown that this function is maximum when the value of $\lambda f_s$ is maximum. This maximum occurs at the lowest frequency, 0.4 GHz. Also, the largest percentage difference between $R_i$ and $R_i'$ occurs at the smallest $\theta_L$; i.e., normally 5 degrees. Thus, the ratio in equation (6) can have values as large as 1.07. This implies that if the center frequency shifts are not accounted for in the calculation of $R^4$ the error can be as much as 33% when processing 0.4 GHz data. When this is applied to equation (1) to compute $\hat{\sigma}^o$, the result could be off by as much as 1.23db.

Similarly, the bandwidth shifts can produce effective cell length changes that result in actual cell area changes, consequently these shifts must also be accounted for in the evaluation of the cell area, A. This is automatically accounted for in the TAMU data reduction system because of the

way the area is calculated [2]. This is discussed further in Section 5.0.

## 4.2 Effects on Usage of Antenna Gain and Roll-Off Filter Functions

The shift in filter center frequency must be accounted for in the system antenna gain, $G_r G_t$, and in the evaluation of the roll-off filter function, Z(f). The effect on roll-off was found to be of less consequence than in the antenna gain. Because of the reportedly irregular shape of the antenna gain pattern, small frequency shifts tend to produce substantual changes in the resulting calculated value of $\hat{\sigma}^o$. The most dramatic effects were noted in the 13.3 GHz and 4.75 GHz antenna patterns. This effect is also explained in the last few viewgraphs in Appendix B. This effect has been subsequently diminished to some extent by using smoothed antenna gain tables [4].

## 4.3 Low Viewing Angle Effects

The analysis of geometry effects on the solution of equation (1) reveal that there are limits on the doppler bandwidth at low viewing angles. As illustrated in Figure 6, whenever half of the actual bandwidth, $BW_A/2$, is greater than the doppler center frequency, $f_{dc}$, for a specified filter; e.g., -5 degrees viewing angle, the lower bound of the bandwidth will extend off the end of the positive spectral filter

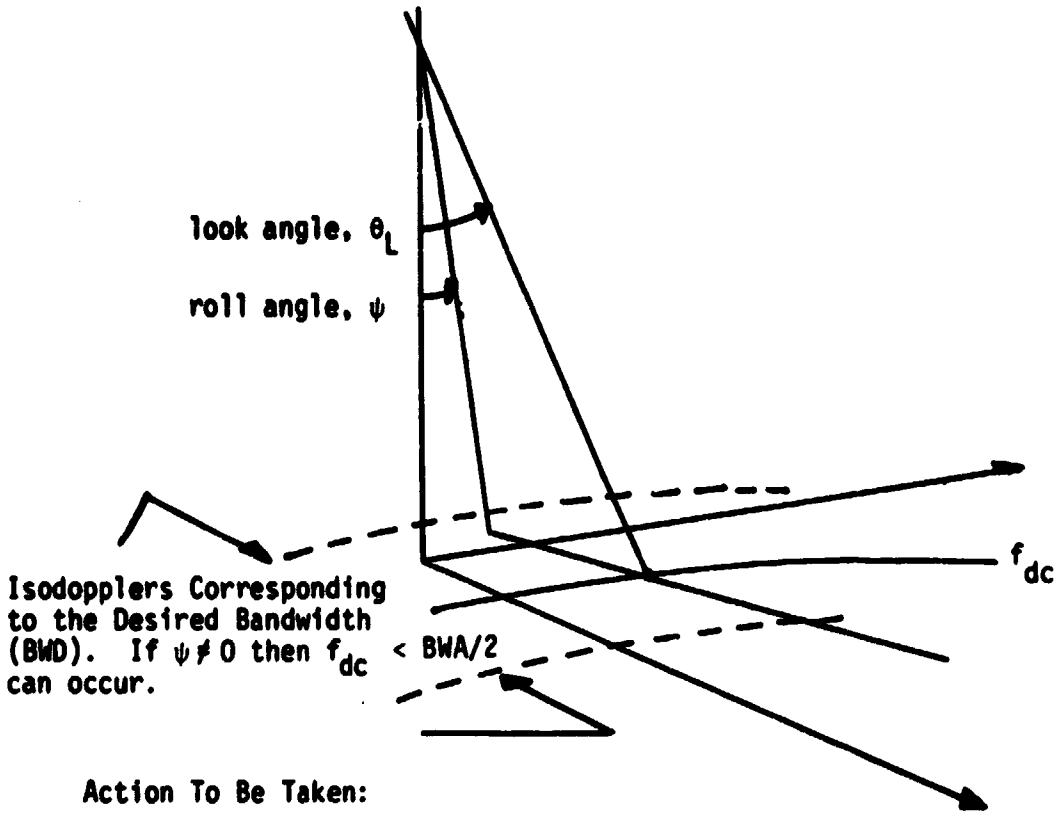


Action To Be Taken:

- If $f_{dc} < BW/2$, set $f_{dc} = BW/2$

  or

- If $f_{dc} < BW/2$, set a flag

Figure 6. Bandwidth and frequency limits at low viewing angles.

region. This has the effect of limiting the actual viewing angle to certain minimum values. It can be shown that these minimum viewing angle values are given by [2]

$$\theta_{L\,min} = \tan^{-1}\left[k^2 + \tan^2\psi\right]^{1/2} \tag{13}$$

where $k = \frac{L}{2H\cos\phi} - \tan\psi\tan\phi$

and

$L$ = ground cell length

$H$ = altitude of aircraft

$\phi$ = drift angle of aircraft

$\psi$ = roll angle of aircraft

Some values of the above expression are illustrated in Figure 7. Note that for increasing cell sizes the limit rapidly approaches -5° when only a small amount of aircraft roll is applied.

Two approaches are used to handle the above limiting cases. At TAMU the value of the true viewing angle is limited so that the effective bandwidth never extends off the end of the PSD. At NASA/JSC the output data set is flagged with a caution note. Either technique is considered acceptable.

## 5.0 GROUND RESOLUTION CELL SIZE

Two different definitions of ground cell size or ground cell length were found to be in use by TAMU and NASA/JSC. First, TAMU software maintains a constant cell length, Figure 8,

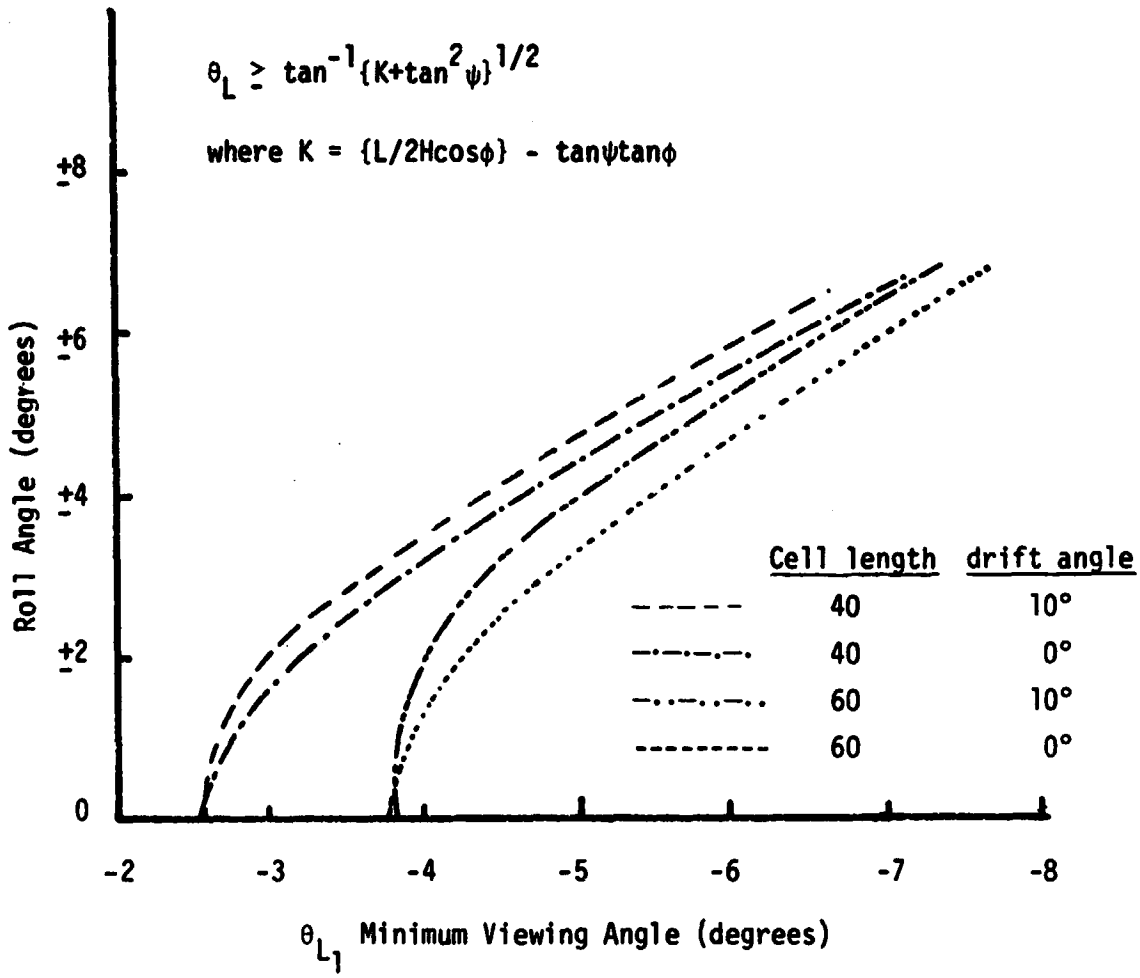


Figure 7. Viewing angle limits as a function of roll angle and drift angle.

Typical Cell Lengths - TAMU Processor*

| | $T_1-T_0$(sec) | L(meters) | L(feet) | L'(meters) | L'(feet) |
|---|---|---|---|---|---|
| 13.3 GHz | 0.08 | 25 | 82.02 | 18.68 | 61.3 |
| 1.6 GHz | 0.41 | 50 | 164.04 | 18.42 | 60.4 |
| 0.4 GHz | 0.82 | 75 | 246.06 | 11.84 | 38.84 |

*Computed for 2048 samples/record and 150 Kts ground speed

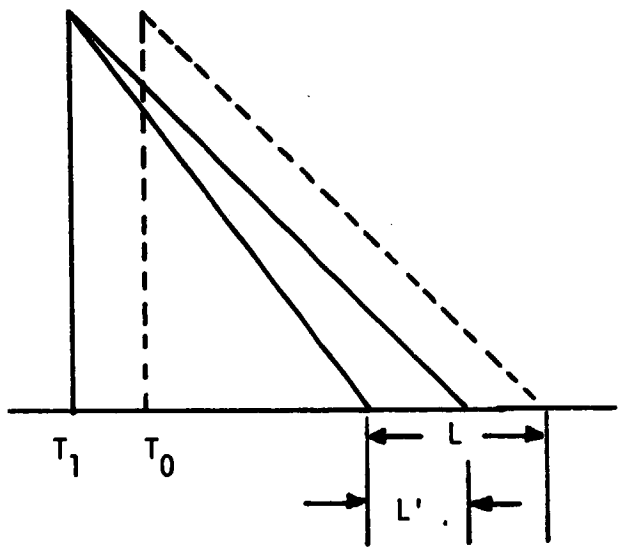


Bandwidth is adjusted to keep L constant for all $\theta_L$ and velocities.

Figure 8. Illustration of the ground cell length as defined by TAMU.

as aircraft parameters vary. This cell length includes both the instantaneous viewing length and the "smear" distance moved by the aircraft during the integration time, $t_o$ to $t_1$. On the other hand, NASA/JSC defines the cell length as the instantaneous viewing length, Figure 9. In the NASA/JSC program the cell length, L', is a program input, and bandwidth, $BW_i$, is adjusted to keep the input value of L' constant for all viewing angles. However, as the aircraft flight parameters change the total ground coverage per cell, L, computed using the NASA/JSC processor will change slightly. This difference in the TAMU and NASA/JSC processors is not significant. But, the fact that NASA/JSC defines the cell resolution length as the instantaneous resolution can be significant if the user does not understand what it means. It is important since the actual ground coverage is greater than the instantaneous resolution by the "smear" distance that results from the time integration process involved in filtering.

## 6.0 COMPARISON OF GENERAL PROGRAM STRUCTURES

The over all systems used to compute $\hat{\sigma}^o$ at NASA/JSC and at TAMU are similar in the sense that both use the discrete Fourier transform to calculate the estimated PSD; however, they differ quite significantly in the way the data are handled before and after the PSD estimate is made. Also, there is a basic difference in the way the sign-sensing is accomplished.

Typical Cell Lengths - NASA/ESD Processor*

| | $T_1-T_0$(sec) | L(meters) | L(feet) | L'(meters) | L'(feet) |
|---|---|---|---|---|---|
| 13.3 GHz | 0.08 | 42.7 | 140.2 | 36.58 | 120 |
| 1.6 GHz | 0.41 | 68.2 | 223.7 | 36.58 | 120 |
| 0.4 GHz | 0.82 | 99.8 | 327.4 | 36.58 | 120 |

*Computed for 2048 samples/record and 150 Kts ground speed

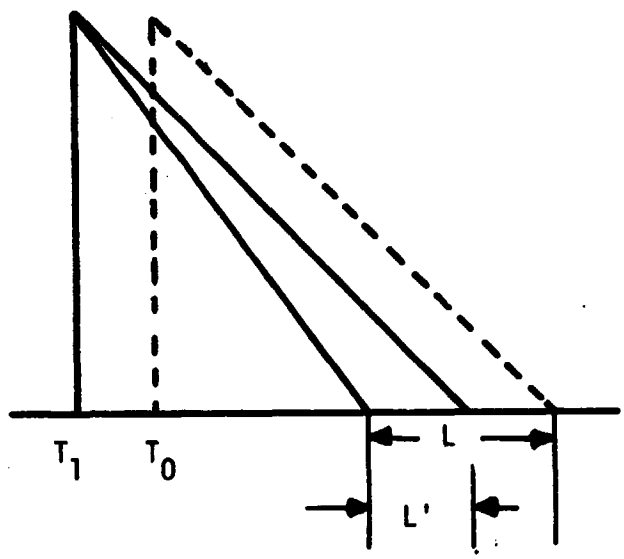


Bandwidth is adjusted to keep L' constant for $\theta_L$

Ground speed variations cause variations in L

Figure 9. Illustration of the ground cell length as defined by NASA/ESD.

The general approach used by both TAMU and NASA/JSC is illustrated in Figure 10. Phase I consists of digitizing selected segments of analog data from the 14-track tapes made on board the aircraft. Phase II uses the 9-track CCT containing the digitized data to calculate and record $\hat{\sigma}^o$ along with appropriate aircraft parameters and time.

## 6.1 NASA/ESD General Program Structure

The NASA/ESD general program structure is illustrated in Figure 11. Note that the system builds two complete and separate files, one containing ADAS/NERDAS data and one containing filtered data for each record from the CCT digital data tape. After the last record is processed the two files are merged into an output data set by averaging both aircraft and filter data over approximately 0.5 second intervals for 13.3 GHz data and longer intervals for the lower frequencies. Next, these data are correlated to aircraft nadir time. The only time limitation noted in examination of this approach was that the two files built prior to merging dictate a limit on the length of the time segment that can be processed during any one execution phase. This limit is most severe for 13.3 GHz data where only lines of 250 seconds or less can be processed.

The sign sensing and PSD estimates are done by first calculating two discrete Fourier transforms, one for the sine

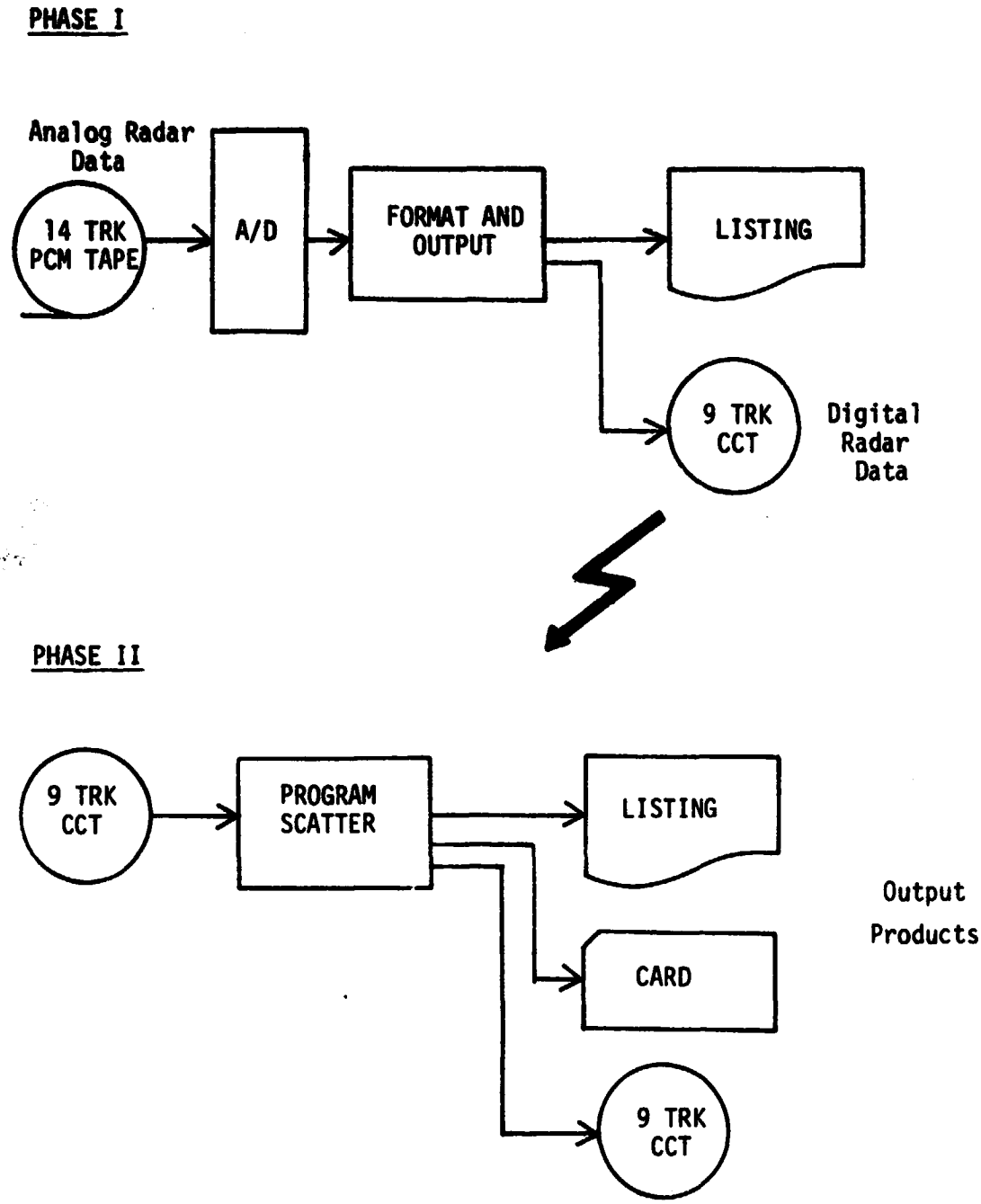


Figure 10. Scatterometer data processing procedure.

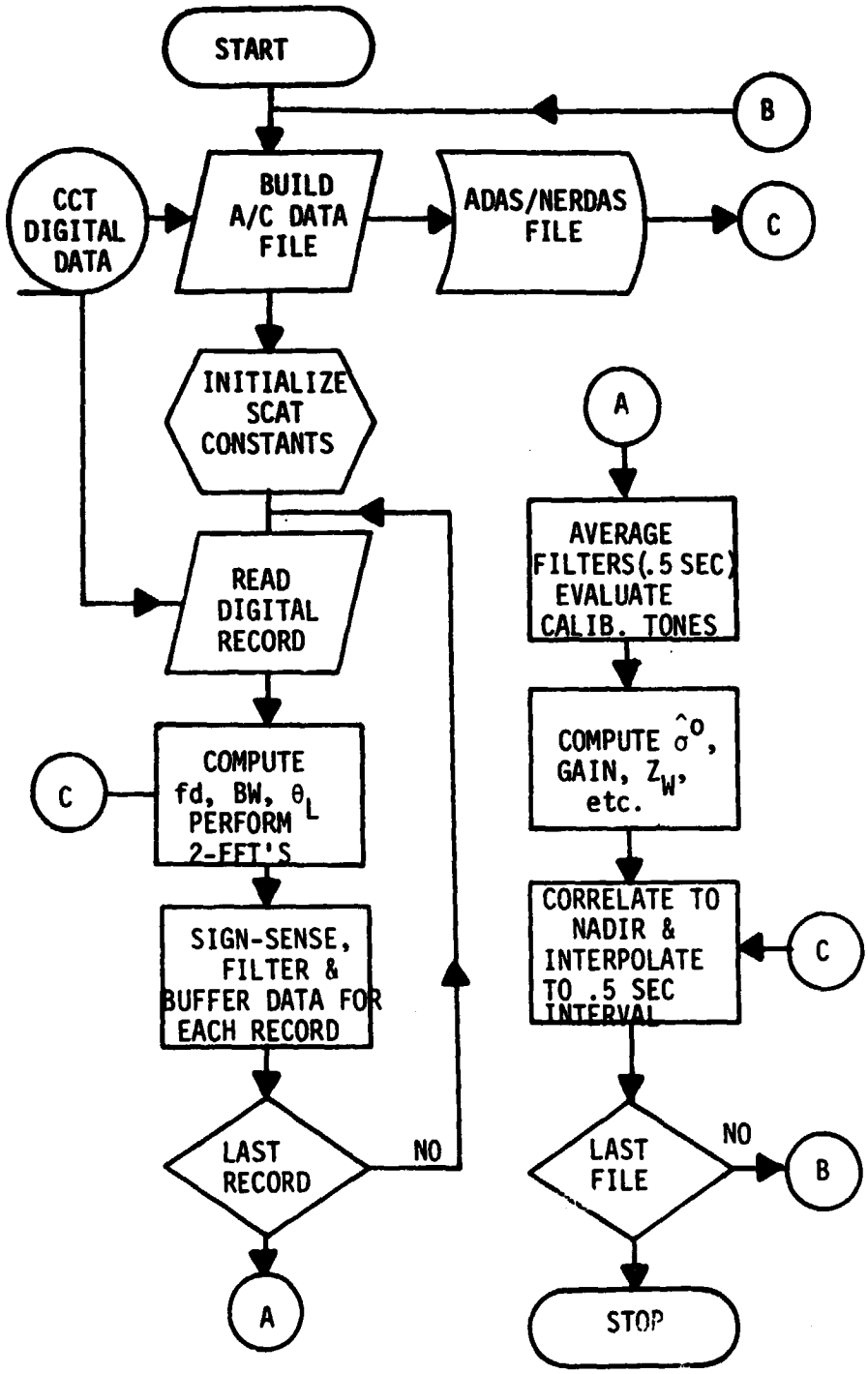


Figure 11. General program structure of the NASA/JSC processing system.

channel and one for the cosine channel of the input data set. The output of these two data sets are then used to get the PSD coefficients for either the fore or aft data using the expressions

$$A_+^2 = \left[(RS - IC)^2 + (RC + IS)^2\right]k^2 \tag{14}$$

$$A_-^2 = \left[(RS + IC)^2 + (RC - IS)^2\right]k^2 \tag{15}$$

where A+ = fore PSD coefficient of $i^{th}$ frequency component

A- = aft coefficient of $i^{th}$ frequency component

RS = real Fourier coefficient of $i^{th}$ frequency component, sine channel

IS = imaginary Fourier coefficient of $i^{th}$ frequency component, sine channel

IC = imaginary Fourier coefficient of $i^{th}$ frequency component, cosine channel

RC = real Fourier coefficient of $i^{th}$ frequency component, cosine channel

k = scaling constant

## 6.2 TAMU General Program Structure

In contrast to the above, the TAMU system illustrated in Figure 12 processes each digital record completely, from 9-track input CCT to the output data set, in one pass. Using this technique there is no specific limits on how long each input data set must be. The processing begins with the first

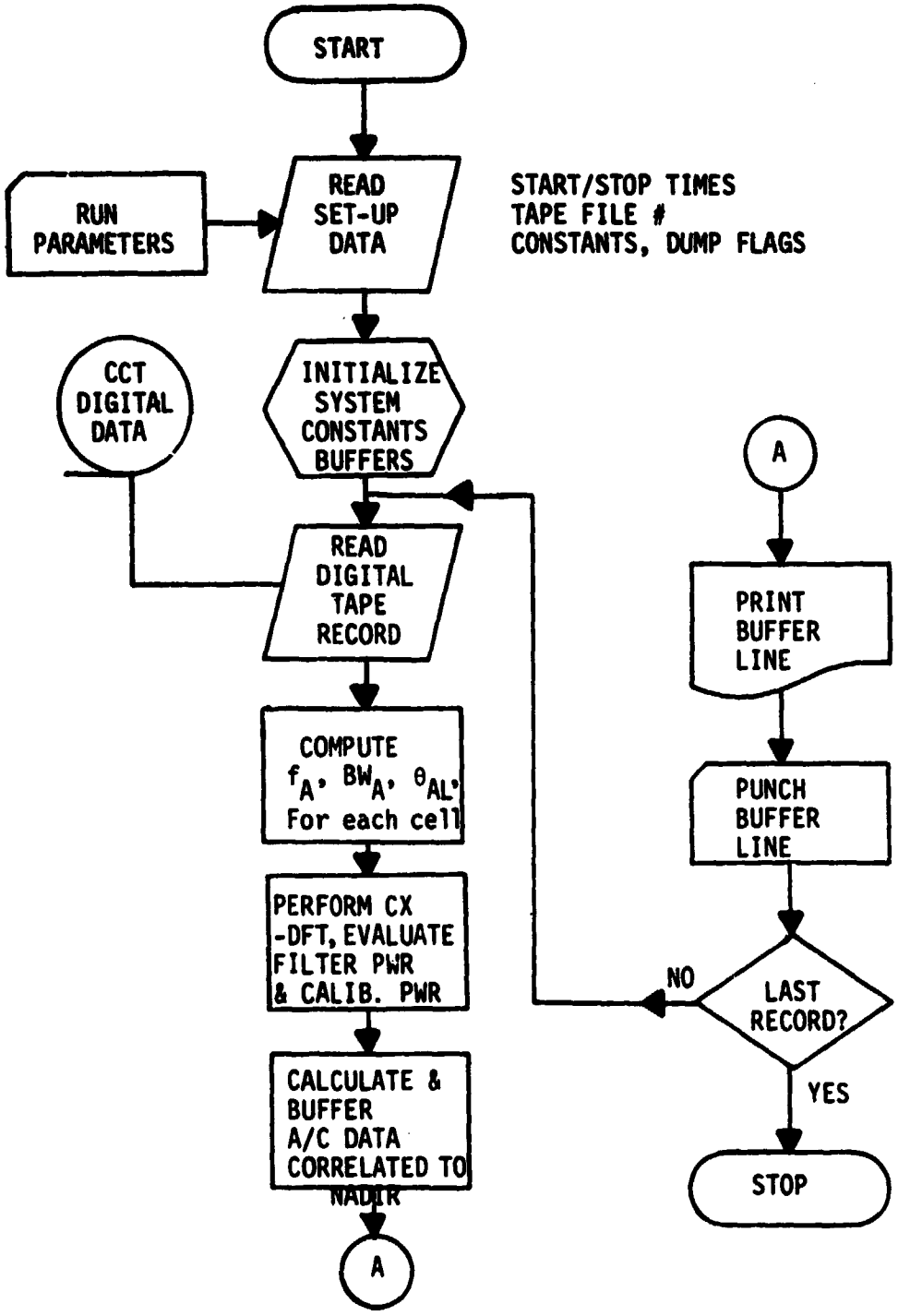


Figure 12. General program structure of the TAMU Processing System.

record and continues serially until the last record is done. The other important difference is in the way the discrete Fourier transform is used to do both PSD estimating and sign sensing in one pass. As illustrated in Figure 13, the NASA/ESD system requires two fast Fourier transforms to produce the aft data PSD, while with one complex fast Fourier transform the TAMU system produces both the fore and aft PSD.

Actual data runs of the TAMU system have established that the average machine computation time per record is 0.102 seconds. The average I/O time is 0.016 seconds per record for a total processing time of 0.118 seconds per record using the TAMU AMDAHL 470. Using the latest pricing equation at the TAMU Data Processing Center the cost per record comes to $0.01334.

Note that it matters some if the data is 0.4 GHz. In this scatterometer system the sign sensing is not done, and thus the TAMU system, as with NASA/ESD, performs two fast Fourier transforms to get the PSD estimate. Run records for 0.4 GHz data through the TAMU system indicate an average of 0.1763 seconds per record with the I/O time the same; i. e., 0.016 seconds per record, giving a total of 0.1923 seconds per record for 0.4 GHz processing.

## 6.3 Comparison of Processing Results

Comparisons were made of the output of the two scatterometer systems. The sample data set chosen to use for the test

NASA/JSC Double FFT

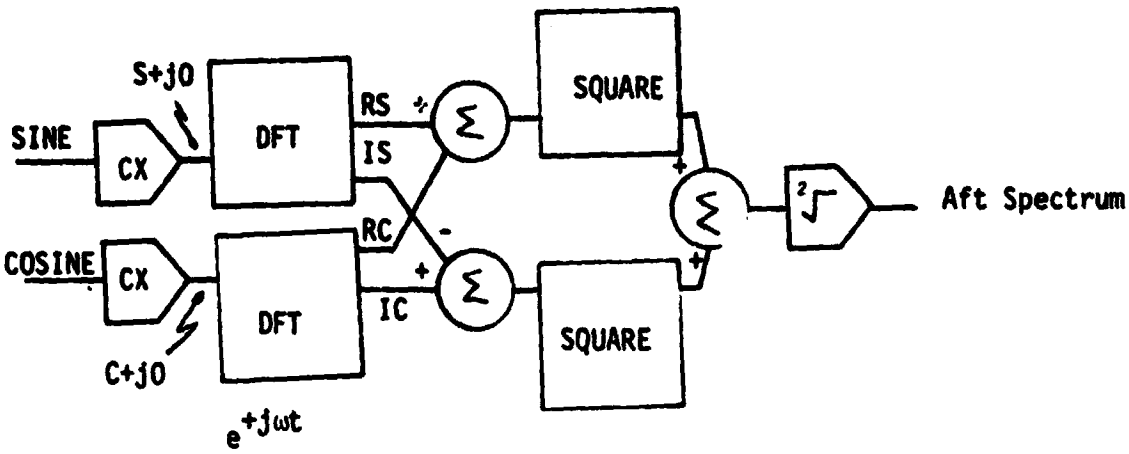


TAMU Single Complex FFT

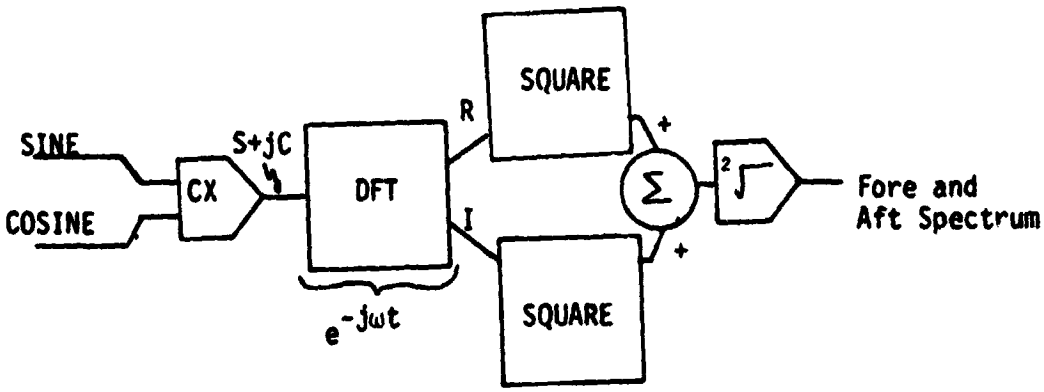


Figure 13 Sign sensing techniques used by TAMU and NASA/ESD.

was Line 5, Run 2, from Mission 347 made on 23 September 1976. Data acquired over Fields 17 and 18 were used as test data. In one test both TAMU and NASA/ESD processed the data using the same digital input data (Figure 14a) and b)). The digital data tape used for this test was produced by NASA/ESD. Some reformatting was done by both NASA/ESD and TAMU to make the input compatible with TAMU software. The results shown in Figure 14 indicates that both systems gave the same estimated $\hat{\sigma}^o$ within $\pm 1.5$ db. This test demonstrated that Phase II of the processing systems were comparable.

A second test was run at TAMU using the same data time segment, but processing was done using as input a digital tape made at TAMU. The results of this test, shown in Figure 15 a) and b), indicate that both systems produce the same result from end-to-end. This test demonstrates that Phase I, the digitazation process, is also comparable.

Some problems in getting equivalent results were encountered early in testing, but subsequently were resolved as differences in the system constants, antenna patterns and roll-off tables between the two systems.

## 7.0 TAMU COMPLEX DIGITAL FOURIER TRANSFORM SYSTEM

### 7.1 Advantages of New System Over the Hilbert Transform System

The Complex Discrete Fourier Transform (CDFT) software system is designed to interface with the same digital computer

Mission 347 Line 5 Run 2 (Lawrence, Kansas)

September 23, 1976 16:57:58.0 to 16:58:01.5

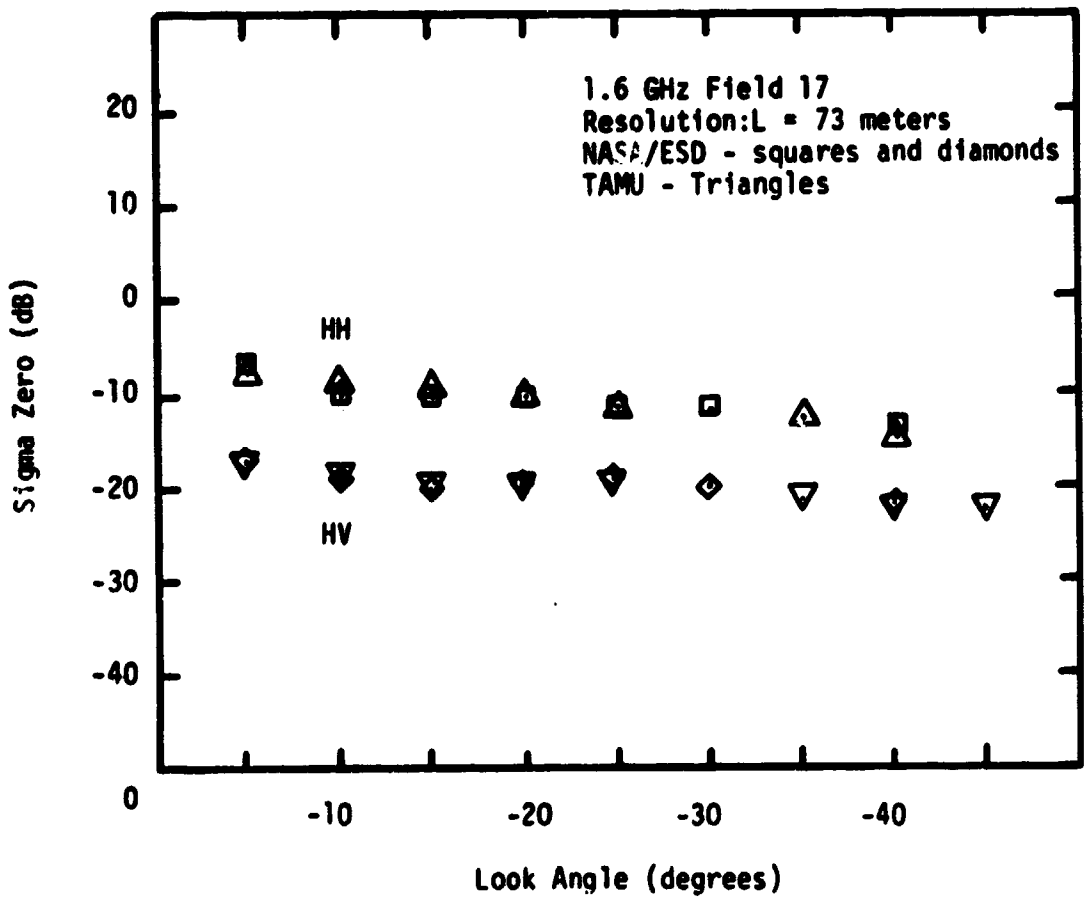


Figure 14.a) Comparison of TAMU and NASA/ESD processing software using as input a common digital tape generated by NASA/ESD.

Mission 347 Line 5 Run 2 (Lawrence, Kansas)

September 23, 1976 16:58:04.5 to 16:58:07.1

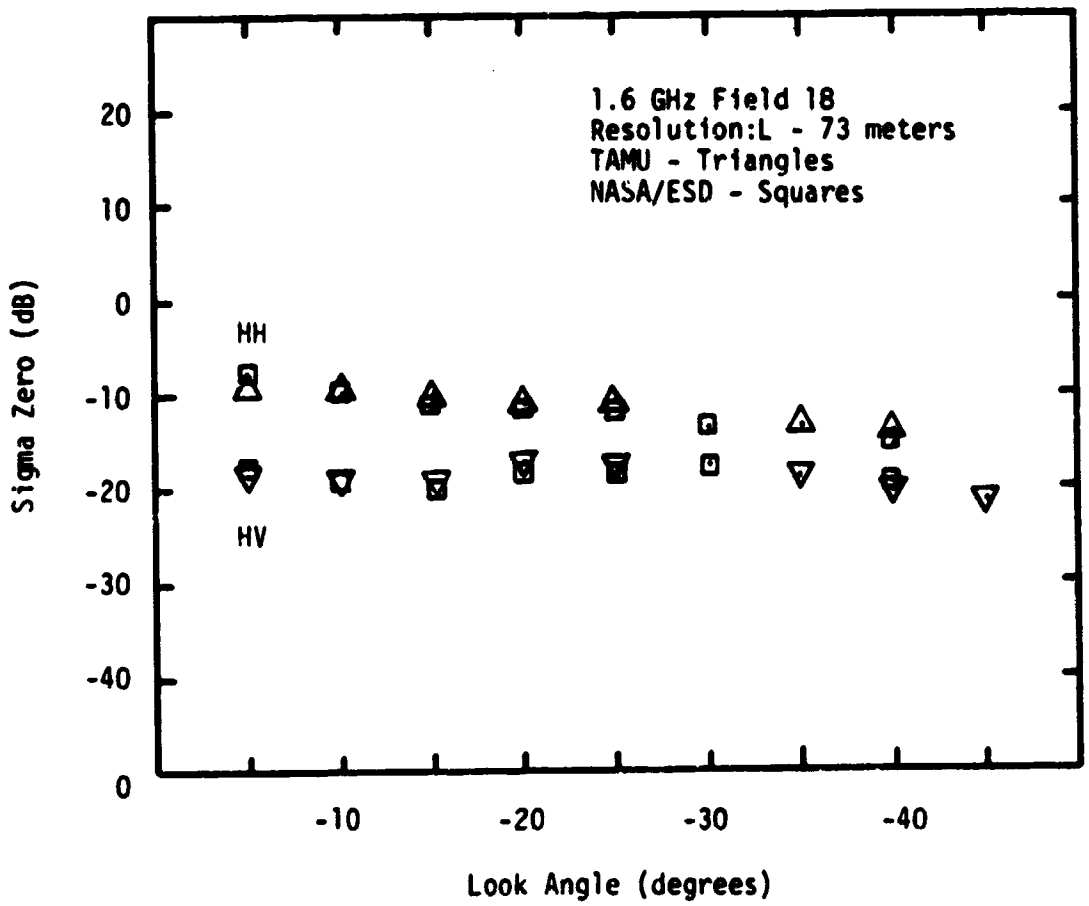


Figure 14.b) Comparison of TAMU and NASA/ESD processing software using as input a common digital tape generated by NASA/ESD.

Mission 347 Line 5 Run 2 (Lawrence, Kansas)

September 23, 1976

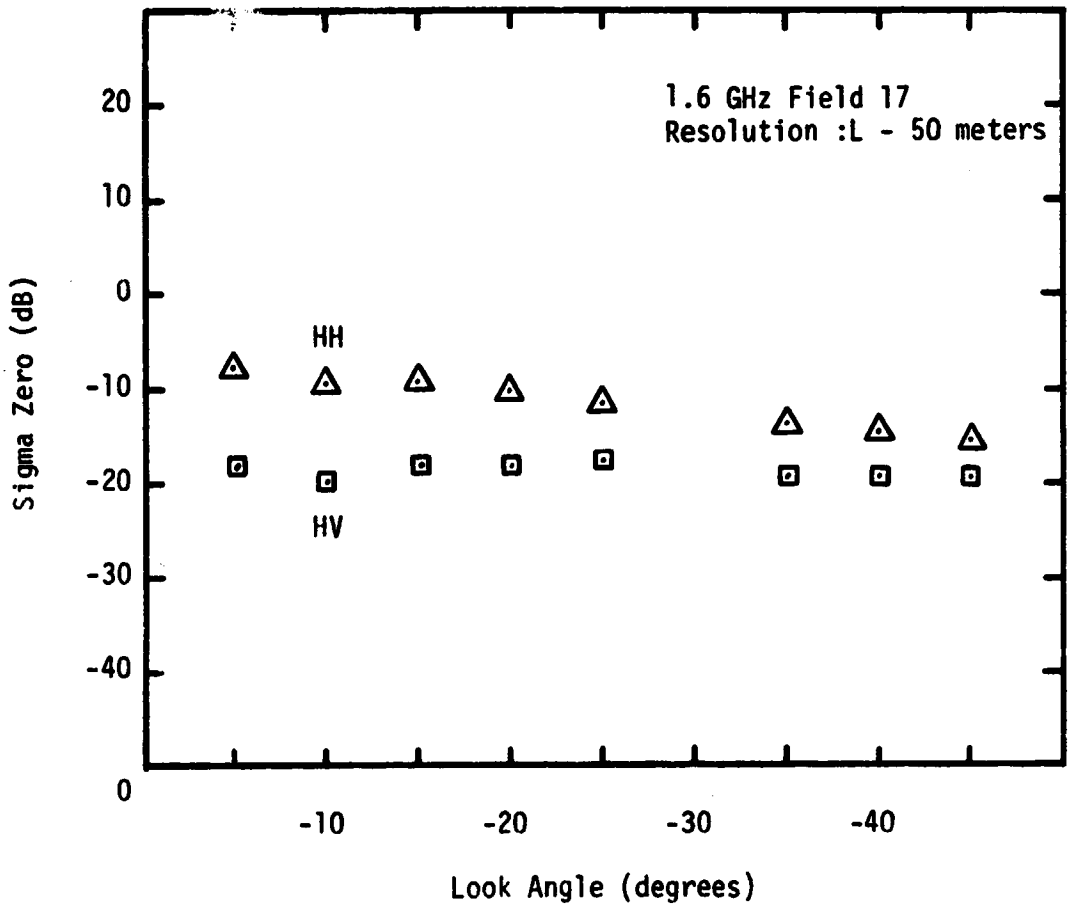


Figure 15.a) Mission 347 Field 17 processed by TAMU using as input a digital tape generated by TAMU.

Mission 347 Line 5 Run 2 (Lawrence, Kansas)

September 23, 1976

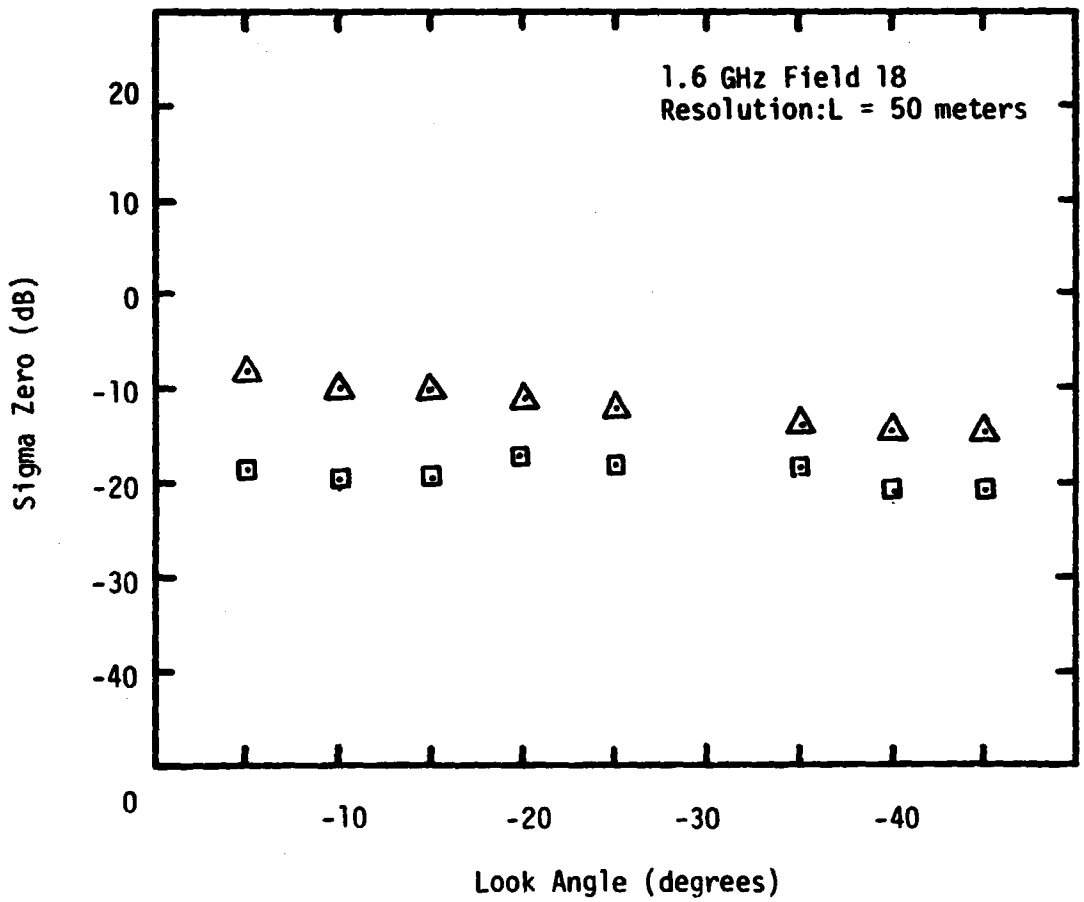


Figure 15.b) Mission 347 Field 18 processed by TAMU using as input a digital tape generated by TAMU.

respective filter, as opposed to an average center frequency used by the earlier HT system. Similarly, the value of the ground cell area, A, is calculated using the actual upper and lower doppler contours that bound the respective cell being viewed at that instant in time, rather than average frequencies for each cell over the flight line.

The ratio of the power received to the power transmitted is taken from the sum of the power spectral density (PSD) lines of the CDFT within the doppler frequency band defining the ground cell can be continuously updated as a function of aircraft parameters, the DFT filtering approach provides a technique to adaptively filter the radar output to maintain cell size and incident angle.

In the HT system the digital filter is used to acquire power within each band, including the calibration power, $P_t$. Each of the digital filters is pre-designed for an average center frequency over the entire flight line. This does not provide constant resolution or incident angle as aircraft flight parameters vary since aircraft dynamics cause the center frequency corresponding to each viewing angle to vary over the length of the flight line. To calculate a new center frequency and re-design each filter for each ground cell would be absolutely prohibitive in machine costs. However, the nature of the CDFT makes it quite easy to optimize band

compatible tape (CCT) format used by the Hilbert transform (HT) sysyem [1] previously developed at TAMU to process scatterometer data. The system performs repeated scattering coefficient estimates for eight aft viewing angles. The output data set has the scattering coefficients, $\hat{\sigma}^o$, aligned with respect to the aircraft nadir times. As before, the scattering coefficient is calculated using the expression

$$\hat{\sigma}^o = \frac{(4\pi)^3}{\lambda^2} \frac{R^4}{A} \frac{C_L}{K_s} \frac{Z(f_d)}{G_r G_t} \frac{P_r}{P_t} \tag{16}$$

where $\lambda$ = wavelength

$R$ = range

$A$ = area

$C_L$ = cable loss

$K_s$ = system constant

$Z(f_d)$ = roll-off

$G_r G_t$ = antenna gain

$P_r$ = power received

$P_t$ = power transmitted

The important difference in the solution techniques used by the CDFT is in the evaluation of the four variables R, A, $P_r$, and $P_t$.

First, the range, R, is calculated to the center of the actual ground cell based upon actual center frequency of the

and center frequency for each cell evaluated by the stem.

## 7.2 CDFT Algorithm Summary

For each set of digital data taken from the CCT, the CDFT system must evaluate eight sets of range, area, roll-off, gain, and power-ratios. This is accomplished in the order illustrated in Figure 16. The symbols used are defined in Table 1. To evaluate $\theta_d$, the doppler angles, the viewing point coordinates of each viewing angle are first calculated using the geometric relations in Figure 17.

$$Y' = H \tan \Psi \tag{17}$$

$$X' = \left[(H \tan \theta)^2 - (Y')^2\right]^{1/2} \tag{18}$$

$$X = X' \cos \phi + Y' \sin \phi \tag{19}$$

$$Y = X' \sin \phi - Y' \cos \phi \tag{20}$$

The doppler angle, $\theta_d$, is then given by

$$\theta_d = TAN^{-1}\left[\frac{X^2}{H^2 + Y^2}\right]^{1/2} \tag{21}$$

The doppler center frequency is then given by

$$f_d = \left(\frac{2V}{\lambda}\right) \sin \theta_d \tag{22}$$

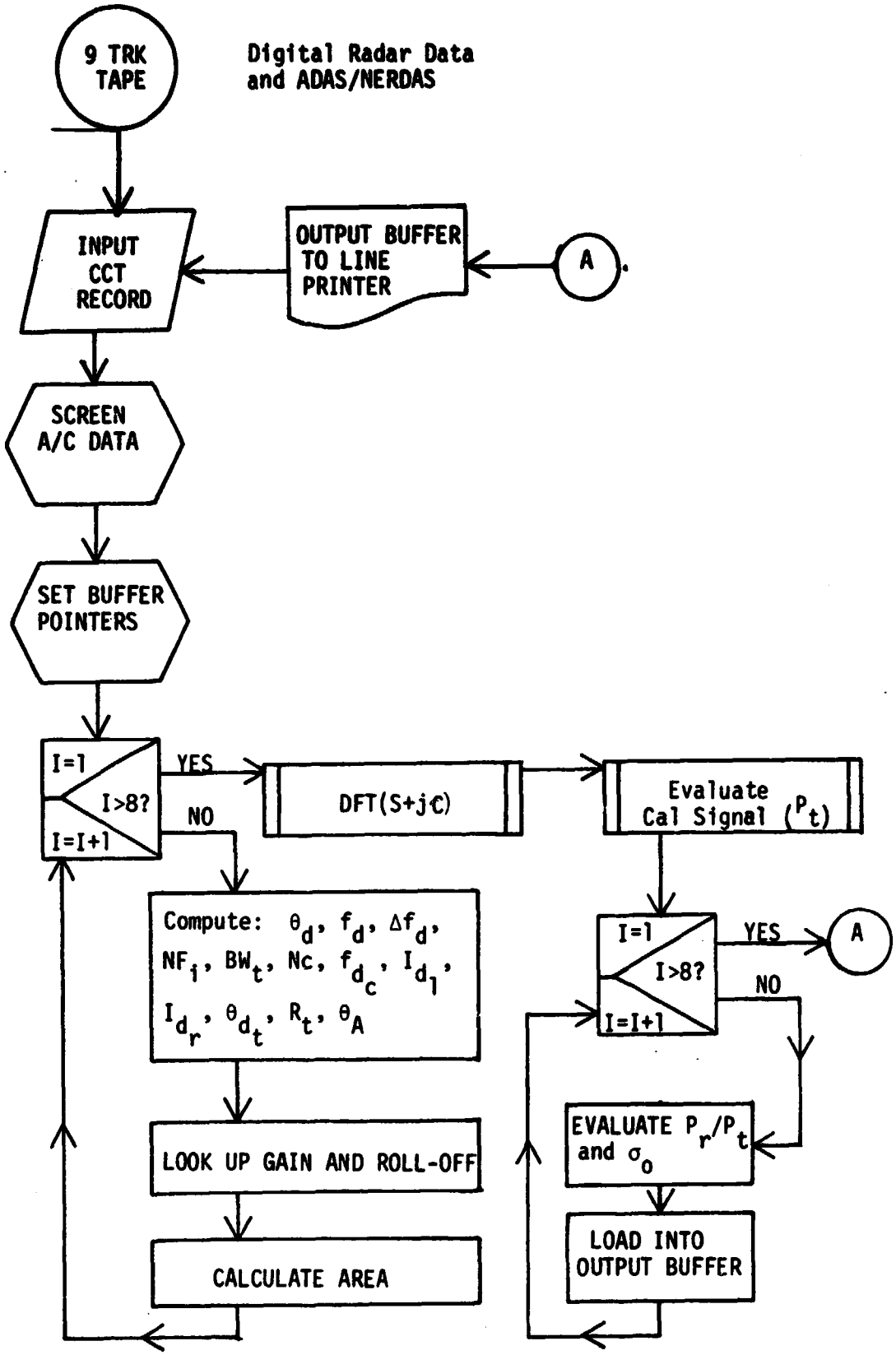


Figure 16. Computational algorithm for computing sigma zero.

TABLE 1

Symbol Cross Reference/Definition

| | |
|---|---|
| $\theta_d$ | Doppler Angle - Viewing angle referenced to the plane of the ground track and aircraft gravity vector. |
| $f_d$ | Doppler frequency associated with a particular viewing angle. |
| $\Delta f_d$ | Bandwidth desired or calculated. |
| $NF_i$ | Number of filter elements (or discrete spectral lines) needed to make $\Delta f_d$. |
| $BW_t$ | True bandwidth - $NF_i$ times the spectral line width. |
| $N_c$ | Center frequency index value. |
| $f_{dc}$ | True doppler (center) frequency associated with the true bandwidth, $BW_t$. |
| $I_{fdl}$ | Left-most doppler filter index pointer |
| $I_{fdr}$ | Right-most doppler filter index pointer |
| $\theta_{dt}$ | True doppler angle associated with true doppler center frequency, $f_{dc}$. |
| $R_t$ | True Range - range from antenna to the true center of the ground cell defined by $f_{dc}$ and $\theta_{dt}$. |
| $\theta_A$ | Viewing angle referenced to the aircraft coordinate system, but without pitch correction, used for gain look-up. |
| $\theta_{Lt}$ | True viewing angle, corrected for shift in doppler center frequency due to discrete PSD lines. |

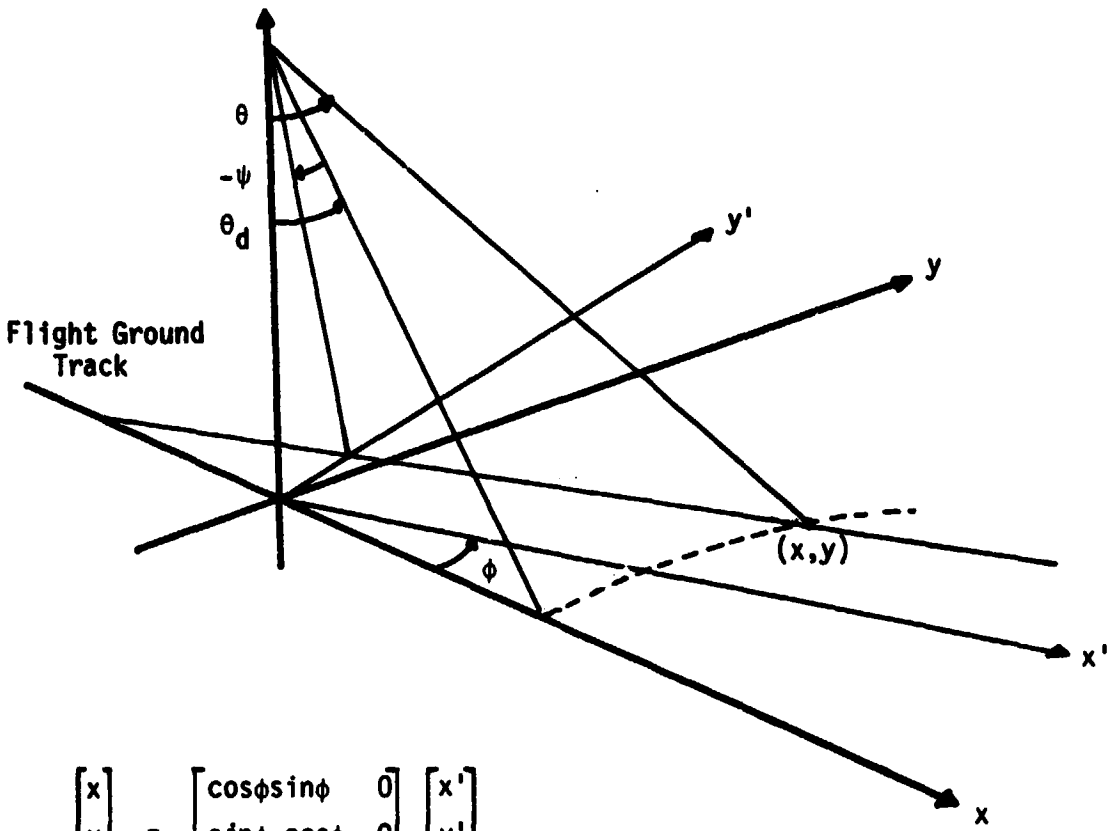


$$\begin{bmatrix} x \\ y \\ z \end{bmatrix} = \begin{bmatrix} \cos\phi & \sin\phi & 0 \\ \sin\phi & -\cos\phi & 0 \\ 0 & 0 & 1 \end{bmatrix} \begin{bmatrix} x' \\ y' \\ z' \end{bmatrix}$$

$\psi$ - roll angle

$\phi$ - drift angle

Figure 17. Definition of processing coordinate system.

where $v$ = aircraft ground speed

$\lambda$ = scatterometer wavelength

Next, the desired bandwidth, $\Delta f_d$, is calculated using

$$\Delta f_d = X_k \cos^3 \theta_d \tag{23}$$

where

$$X_k = \left(\frac{2V}{\lambda}\right)\frac{L}{H} \tag{24}$$

and $L$ = instantaneous ground cell length

$H$ = aircraft altitude

The number of filter elements required in the PSD set to represent the desired bandwidth is calculated by

$$NF_i = \left[\Delta f_d \left(N/f_s\right) + 0.5\right]_I \tag{25}$$

where $N$ = number of lines in the PSD.

$f_s$ = sample frequency of digitizer when making the CCT.

The notation $[\ ]_I$ means integer value of the floating point expression enclosed.

Note that the true bandwidth is the sum of the filter elements needed, $NF_i$, thus

$$BW_t = NF_i \left(f_s/N\right) \tag{26}$$

gives the actual bandwidth over which the power will be sumed.

The center frequency index for the PSD buffer is given by

$$N_c = [f_d(N/f_s) + 0.5]_I \tag{27}$$

and the true center frequency is then

$$f_{d_c} = N_c(f_s/N) \tag{28}$$

whenever the value of $NF_i$ is odd. When the value of $NF_i$ is even, $N_c$ is given by

$$N_c = [f_d(N/f_s)]_I \tag{29}$$

and the true center frequency is

$$f_{d_c} = (N_c + 0.5)(f_s/N) \tag{30}$$

Similarly, the value of the PSD left and right power summation pointers depend on whether $NF_i$ is odd or even. For the case where $NF_i$ is odd the left pointer is given by

$$I_{f_{d_L}} = N_c - (NF_i - 1)/2 \tag{31}$$

when $NF_i$ is even, the left pointer is given by

$$I_{f_{d_L}} = N_c + 1 - NF_i/2 \tag{32}$$

In either case the right pointer is given by

$$IPdr = IPdL + NF_i - 1 \tag{33}$$

Next, since the actual doppler center may have been shifted by as much as one-half a spectral line in the PSD, the true doppler angle, and thus the true viewing angle, may be shifted accordingly. The true doppler angle is given by

$$\theta_{dt} = SIN^{-1}\left(\frac{f_{dc}\,\lambda}{2V}\right) \tag{34}$$

The true (or corrected) viewing angle is now evaluated by

$$\theta_{Lt} = TAN^{-1}\left[\frac{((H^2+Y^2)\tan^2\theta_{dt}+Y^2)^{1/2}}{H}\right] \tag{35}$$

The true range, $R_t$, to the cell may be evaluated by

$$R_t = H/\cos\theta_{Lt} \tag{36}$$

and the antenna angle, $\theta_A$, is given by

$$\theta_A = TAN^{-1}\left[-\cos\psi(\tan^2\theta_{Lt}-\tan^2\psi)^{1/2}\right] \tag{37}$$

The value of antenna gain is evaluated using the actual viewing angle, $\theta_A$. The value of system roll-off is evaluated using the true doppler center frequency, $f_{dc}$.

The value of cell area, A, is calculated using the doppler contour technique described in [4], [5]; i.e.,

$$A = \frac{W'(Y_2 - Y_1)}{\cos \phi} \tag{38}$$

where

$$W' = \frac{2H \cdot \tan \beta/2}{\cos \theta_{L_c} \cos \psi} \tag{39}$$

and $\beta$ = antenna beamwidth

The value of $y_1$ and $y_2$ are given by

$$Y_i = \frac{-H}{1 - k_i \cos^2 \phi} \left\{ \tan \phi \tan \psi + \left( \tan^2 \psi (k_i - 1) + k_i \cos^2 \phi - 1 \right)^{1/2} \right\} \tag{40}$$

where $k_i = \left(\frac{2v}{\lambda f_i}\right)^2$

The value of $f_i$ is interpreted to be $f_1$ = lower doppler frequency limit of the actual bandwidth and $f_2$ = upper doppler limit of the bandwidth.

After completing the above calculations for each of eight viewing angles, the PSD buffer is calculated using the CDFT. The input to the transform is programmed so that the real part is always the true sine signal and the imaginary part is always the true cosine signal from the radar analog data set. The output of the CDFT, which convolves on the basis of $e^{-j\omega t}$, is the set of Fourier coefficients arranged such that the aft data is associated with positive frequencies and the fore data

is associated with the negative frequencies, Figure 18. The PSD buffer is then filled with the square of complex absolute values of the aft data coefficients.

Using the index pointers already computed, the $P_r$ and $P_t$ values are found by summing over the appropriate sets of PSD lines. Now one only needs to evaluate equation (1), above, for each of the eight viewing angles. This will complete the calculation cycle for one instant in time, and one CCT record.

The TAMU CDFT system is designed to process data from any one of four scatterometer frequencies; i. e., 0.4, 1.6, 4.75, or 13.3 GHz. The system has been tested extensively using 1.6 and 13.3 GHz data inputs. It has had some testing with both 0.4 and 4.75 GHz data, however, measurements at these frequencies were limited during the course of this evaluation.

Appendix C is a FORTRAN listing of the processing system and is complete with the exception of the antenna gain tables.

Appendix D contains references [3] and [4] which might otherwise be difficult to obtain.

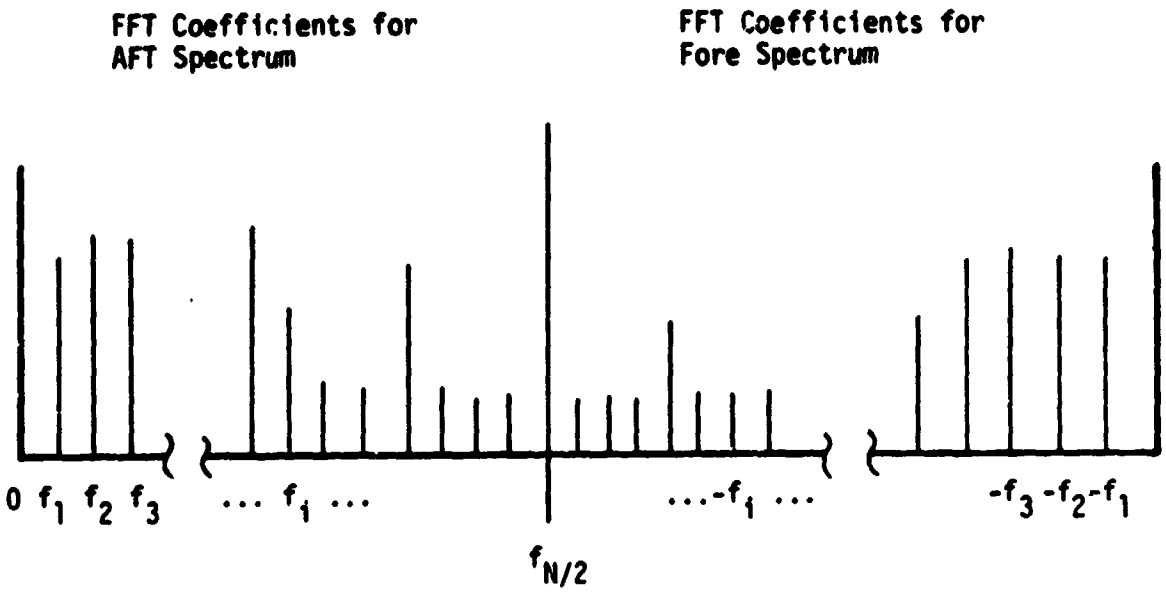


Figure 18. Spectral arrangement of the complex digital Fourier transform.

## 8.0 REFERENCES


[1] "JSME Scatterometer Data Processing", Final Report RSC-3337, Texas A&M University, Remote Sensing Center, August 1977.

[2] "The System Hardware and Design of a Real-Time Fan Beam Scatterometer Data Processing", Final Report RSC-3556, Remote Sensing Center, Texas A&M University, March 1979.

[3] Clark, B.V. and R. W. Newton, "Comparison of Scatterometer Resolution Cell Area Approximations", Technical Memorandum RSC-159, Remote Sensing Center, Texas A&M University, March 1979.

[4] Newton, R.W., and B.V. Clark, "Equations For Computing the Area Term In the Radar Scatterometer Processing Algorithm", Technical Memorandum RSC-160, Remote Sensing Center, Texas A&M University, April 1979.

[5] "An Airborne Radar Scatterometer Signal Processing System", Progress Report RSC-3182-1, Remote Sensing Center, Texas A&M University, Feb-Apr 1975.

[6] Memorandum; Steve Reid, Lockheed Electronics, to Dr. Richard Newton, Remote Sensing Center, TAMU; dated 19 Jan 1978.

# APPENDIX A

# FLOW CHARTS FOR HILBERT TRANSFORM PROCESSING SYSTEM

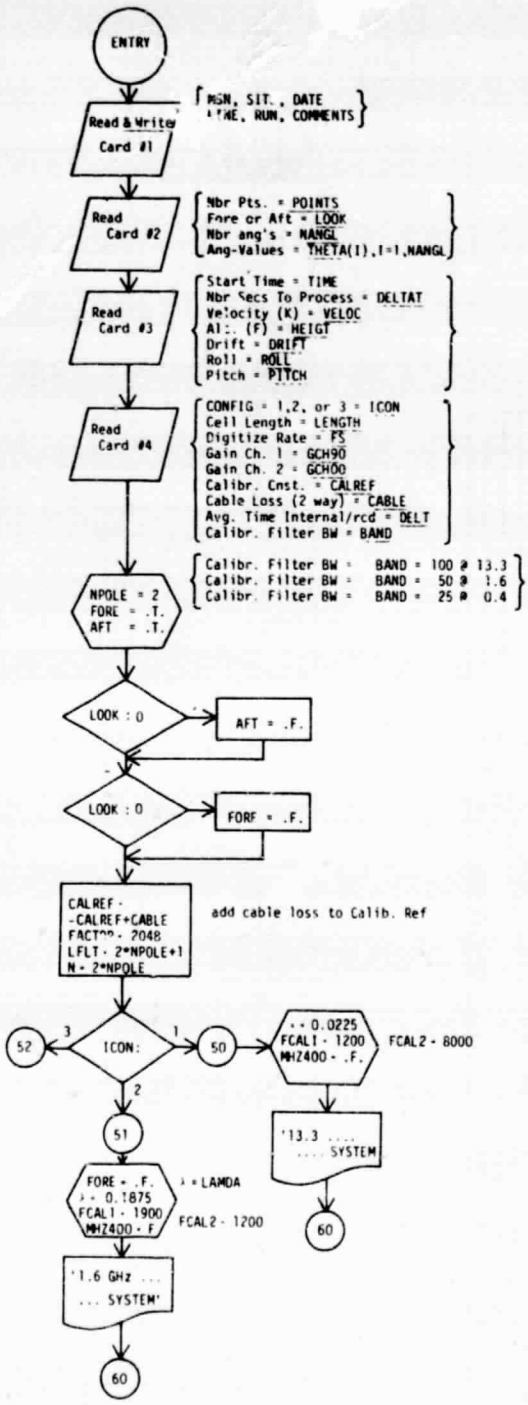


REVISIONS

| ZONE | LTR | DESCRIPTION | DATE | APPROVED |
|---|---|---|---|---|

REMOTE SENSING CENTER
TEXAS A&M UNIVERSITY
COLLEGE STATION, TEXAS

HILBERT TRANSFORM
PROCESSING SYSTEM

CONTRACT NO.

DATE _____

ENGR.
CK.
APV'D.

TOLERANCES:
DEC.± .005
FRACTIONS±1/64
ANGLES±.5°

NEXT ASSY
USED ON
APPLICATION

SIZE B
CODE IDENT. NO.
DRAWING NO.
SCALE
SHEET 1.0

52
FORE←F.
λ← 0.75
FCAL1←1000
FCAL2←500
'0.400 GHz...
... SYSTEM'
60
PRINTER:
FCAL:
CALREF
LAMDA
PRINTER:
GCH00
GCH90
TSTART ← TIME in Secs.
TSTOP ← TSTART + DELTAT
PRINTER:
TSTART, TSTOP, POINTS, NPOLE
NANGL, VELOC, HEIGT, DRIFT
ROLL, PITCH
PRINTER:
LENGTH
(Cell Length)
CONVERT to Metric/Radians
DRIFT,ROLL,PITCH ← RADIANS
VELOC ← Meters/sec
HEIGT ← Meters
HTSAVE ← HEIGT
VELSAV ← VELOC
XK←2*(LENGTH-VELOC*POINTS/FS)*VELOC/LAMDA/HEIGT
XK = 2(L - vn/fs) v/in
FREQ[NANGL+1]←FCAL1
M ← 1
FSUB0 ← FCAL1
NANGL ≤ 8
(NANGL ≠ 8)
FCAL1:
12000 @ 13.3 GHz
1900 @ 1.6
1000 @ 0.4
2.0
Sheet 2.0
REVISIONS
ZONE
LTR
DESCRIPTION
DATE
APPROVED
TOLERANCES:
DEC: ±.005
FRACTIONS: ±1/64
ANGLES: ±5°
CONTRACT NO.
DATE
ENGR.
CK.
APVD.
NEXT ASSY
USED ON
APPLICATION
REMOTE SENSING CENTER
TEXAS A&M UNIVERSITY
COLLEGE STATION, TEXAS
HILBERT TRANSFORM
PROCESSING SYSTEM
SIZE
B
CODE IDENT. NO.
DRAWING NO.
SCALE
SHEET 1.1

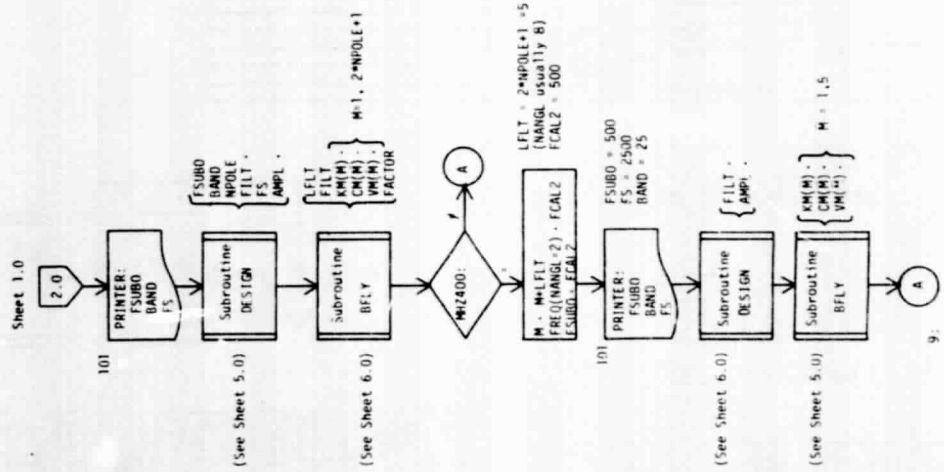


| REVISIONS | | | | |
|---|---|---|---|---|
| ZONE | LTR | DESCRIPTION | DATE | APPROVED |

| | | | | |
|---|---|---|---|---|
| NEXT ASSY | USED ON | TOLERANCES: DEC ± .005 FRACTIONS ± 1/64 ANGLES ± .5° | CONTRACT NO. DATE | REMOTE SENSING CENTER TEXAS A&M UNIVERSITY COLLEGE STATION, TEXAS |
| APPLICATION | | | ENGR. CK. APVD. | HILBERT TRANSFORM PROCESSING SYSTEM |
| | | | | SIZE B / CODE IDENT. NO. / DRAWING NO. |
| | | | | SCALE / SHEET 2.0 |

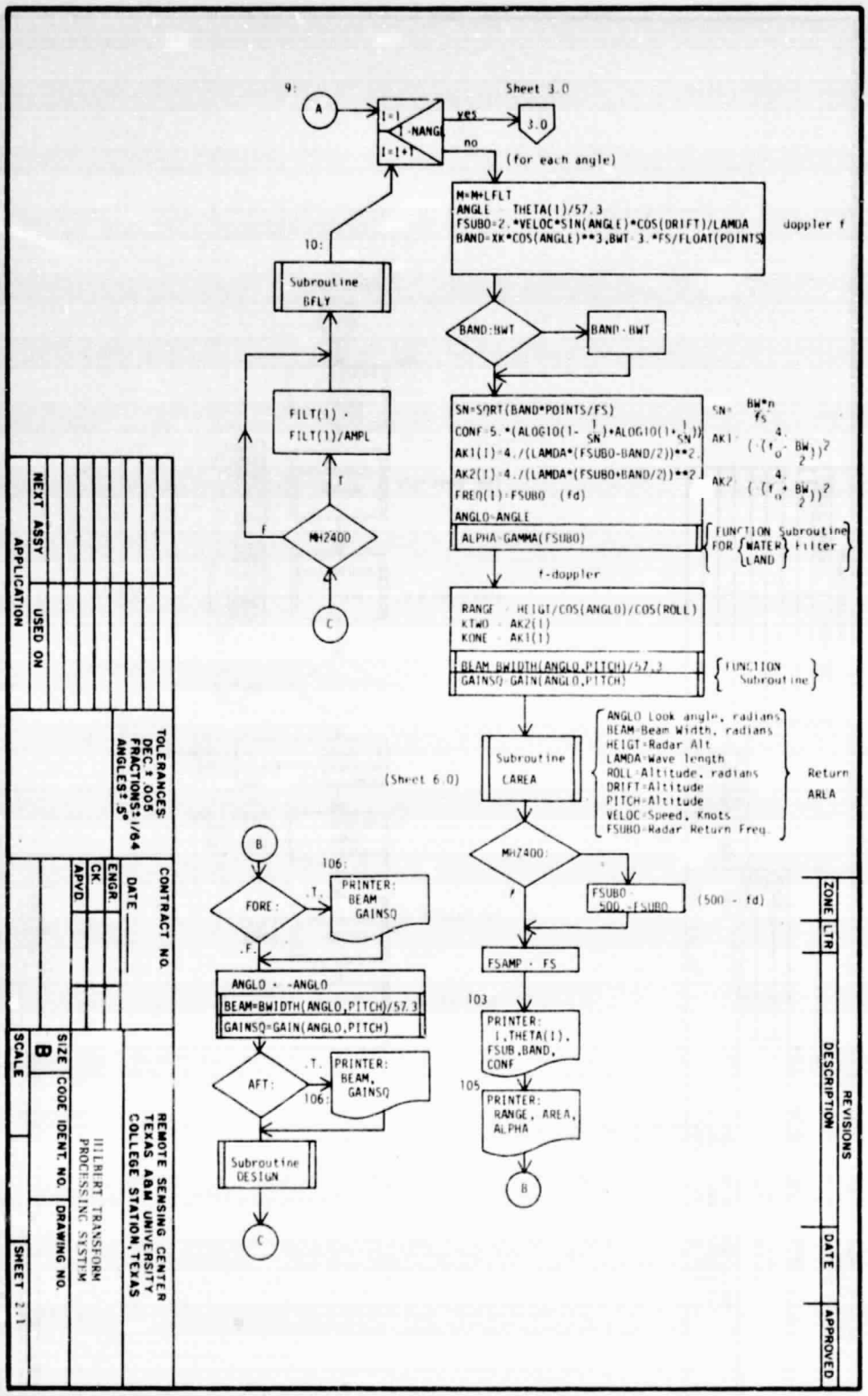
9:
A
I=1
I=I+1
I-NANG
yes
no
Sheet 3.0
3.0
(for each angle)
M=M+LFLT
ANGLE THETA(I)/57.3
FSUBO=2.*VELOC*SIN(ANGLE)*COS(DRIFT)/LAMDA
BAND=XK*COS(ANGLE)**3,BWT-3.*FS/FLOAT(POINTS)
doppler f
BAND:BWT
BAND=BWT
SN=SQRT(BAND*POINTS/FS)
CONF=5.*(ALOG10(1-1/SN)+ALOG10(1+1/SN))
AK1(I)=4./(LAMDA*(FSUBO-BAND/2))**2.
AK2(I)=4./(LAMDA*(FSUBO+BAND/2))**2.
FREQ(I)=FSUBO (fd)
ANGLO=ANGLE
ALPHA=GAMMA(FSUBO)
FUNCTION Subroutine FOR WATER LAND Filter
f-doppler
RANGE HEIGT/COS(ANGLO)/COS(ROLL)
KTWO AK2(I)
KONE AK1(I)
BEAM BWIDTH(ANGLO,PITCH)/57.3
GAINSQ GAIN(ANGLO,PITCH)
FUNCTION Subroutine
Subroutine CAREA
(Sheet 6.0)
ANGLO Look angle, radians
BEAM=Beam Width, radians
HEIGT=Radar Alt
LAMDA=Wave length
ROLL=Altitude, radians
DRIFT=Altitude
PITCH=Altitude
VELOC=Speed, Knots
FSUBO=Radar Return Freq.
Return AREA
MH2400:
FSUBO 500.-FSUBO
(500 - fd)
FSAMP = FS
103
PRINTER: I,THETA(I), FSUB,BAND, CONF
105
PRINTER: RANGE, AREA, ALPHA
B
10:
Subroutine BFLY
FILT(I) = FILT(I)/AMPL
MH2400
T
F
C
B
FORE:
.T.
106:
PRINTER: BEAM GAINSQ
.F.
ANGLO = -ANGLO
BEAM=BWIDTH(ANGLO,PITCH)/57.3
GAINSQ=GAIN(ANGLO,PITCH)
AFT:
.T.
106:
PRINTER: BEAM, GAINSQ
Subroutine DESIGN
C
REVISIONS
ZONE
LTR
DESCRIPTION
DATE
APPROVED
APPLICATION
NEXT ASSY
USED ON
TOLERANCES: DEC ± .005 FRACTIONS± 1/64 ANGLES± .5°
CONTRACT NO.
DATE
ENGR.
CK.
APVD
REMOTE SENSING CENTER
TEXAS A&M UNIVERSITY
COLLEGE STATION, TEXAS
SIZE B
CODE IDENT. NO.
DRAWING NO.
HILBIRT TRANSFORM PROCESSING SYSTEM
SCALE
SHEET 2.1

ORIGINAL PAGE IS
OF POOR QUALITY

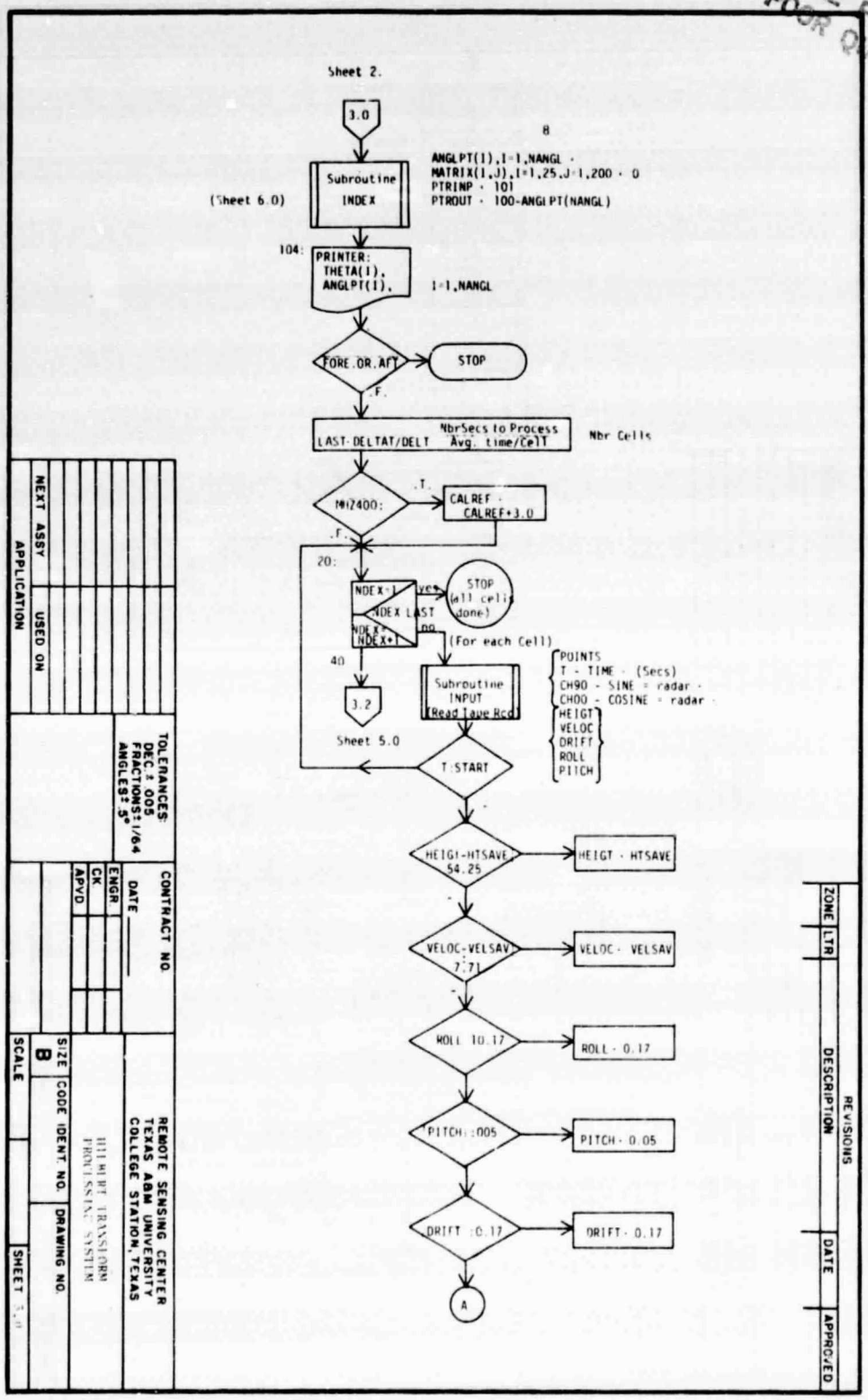

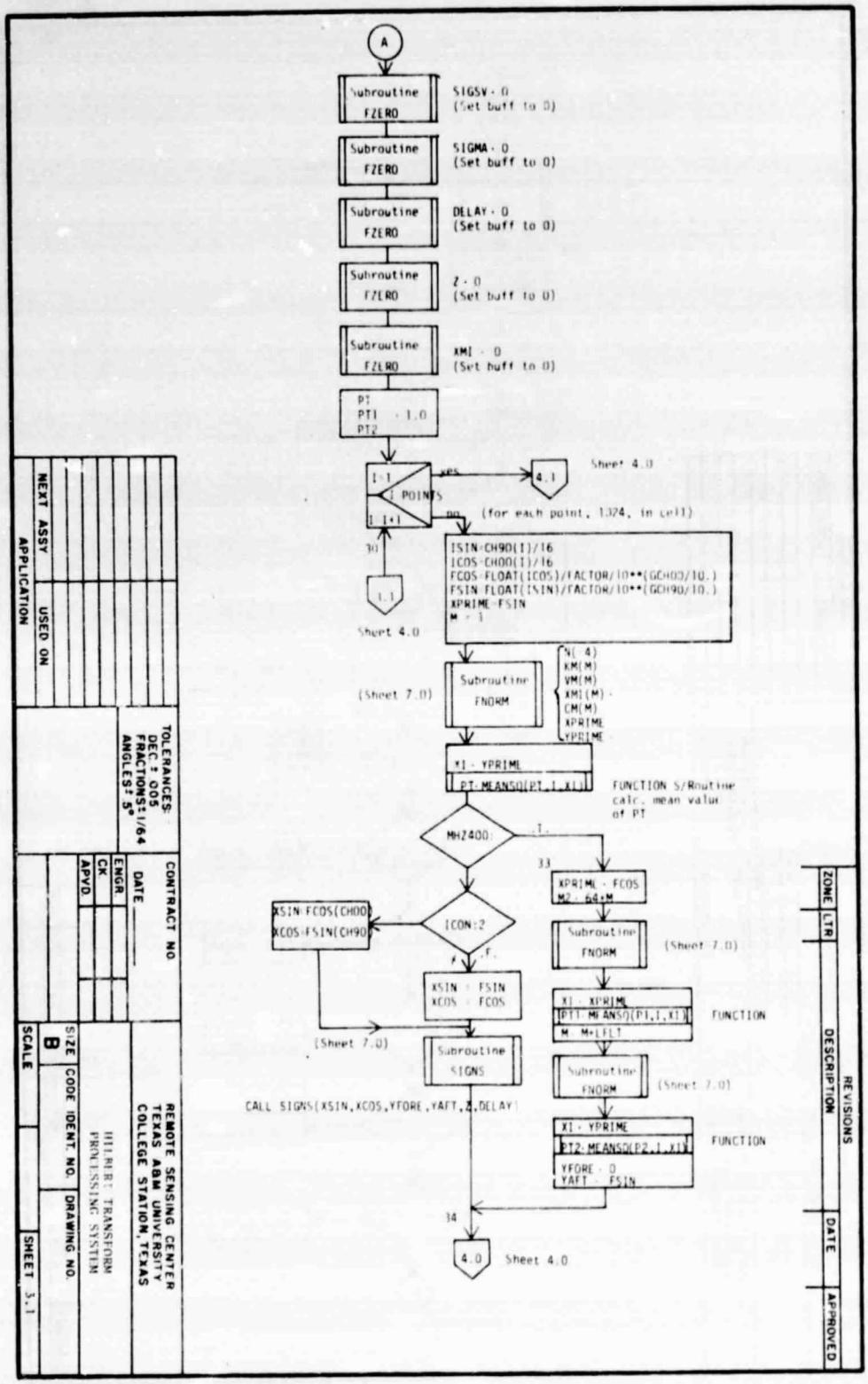
A
Subroutine FZERO
SIGSV - 0 (Set buff to 0)
SIGMA - 0 (Set buff to 0)
DELAY - 0 (Set buff to 0)
Z - 0 (Set buff to 0)
XMI - 0 (Set buff to 0)
PT PT1 PT2 - 1.0
I=1
I POINTS
I=I+1
yes
4.1
Sheet 4.0
no
(for each point, 1024, in cell)
30
1.1
Sheet 4.0
ISIN=CH90(I)/16
ICOS=CH00(I)/16
FCOS=FLOAT(ICOS)/FACTOR/10**(GCH00/10.)
FSIN=FLOAT(ISIN)/FACTOR/10**(GCH90/10.)
XPRIME=FSIN
M = 1
(Sheet 7.0)
Subroutine FNORM
N(=4)
KM(M)
VM(M)
XMI(M)
CM(M)
XPRIME
YPRIME
XI - YPRIME
PT-MEANSQ(PT,I,XI)
FUNCTION S/Routine calc. mean value of PT
MHZ400
.T.
33
XPRIME - FCOS
M2 - 64*M
Subroutine FNORM
(Sheet 7.0)
XI - XPRIME
PT1-MEANSQ(P1,I,XI)
M - M+LFLT
FUNCTION
Subroutine FNORM
(Sheet 7.0)
XI - YPRIME
PT2-MEANSQ(P2,I,XI)
YFORE - 0
YAFT - FSIN
FUNCTION
34
4.0
Sheet 4.0
ICON:2
XSIN=FCOS(CH00)
XCOS=FSIN(CH90)
.F.
XSIN = FSIN
XCOS = FCOS
(Sheet 7.0)
Subroutine SIGNS
CALL SIGNS(XSIN,XCOS,YFORE,YAFT,Z,DELAY)
REVISIONS
ZONE
LTR
DESCRIPTION
DATE
APPROVED
NEXT ASSY
USED ON
APPLICATION
TOLERANCES: DEC.± .005 FRACTIONS± 1/64 ANGLES± 5°
CONTRACT NO.
DATE
ENGR.
CK
APVD.
REMOTE SENSING CENTER
TEXAS A&M UNIVERSITY
COLLEGE STATION, TEXAS
HILBERT TRANSFORM PROCESSING SYSTEM
SIZE
B
CODE IDENT. NO.
DRAWING NO.
SCALE
SHEET 3.1

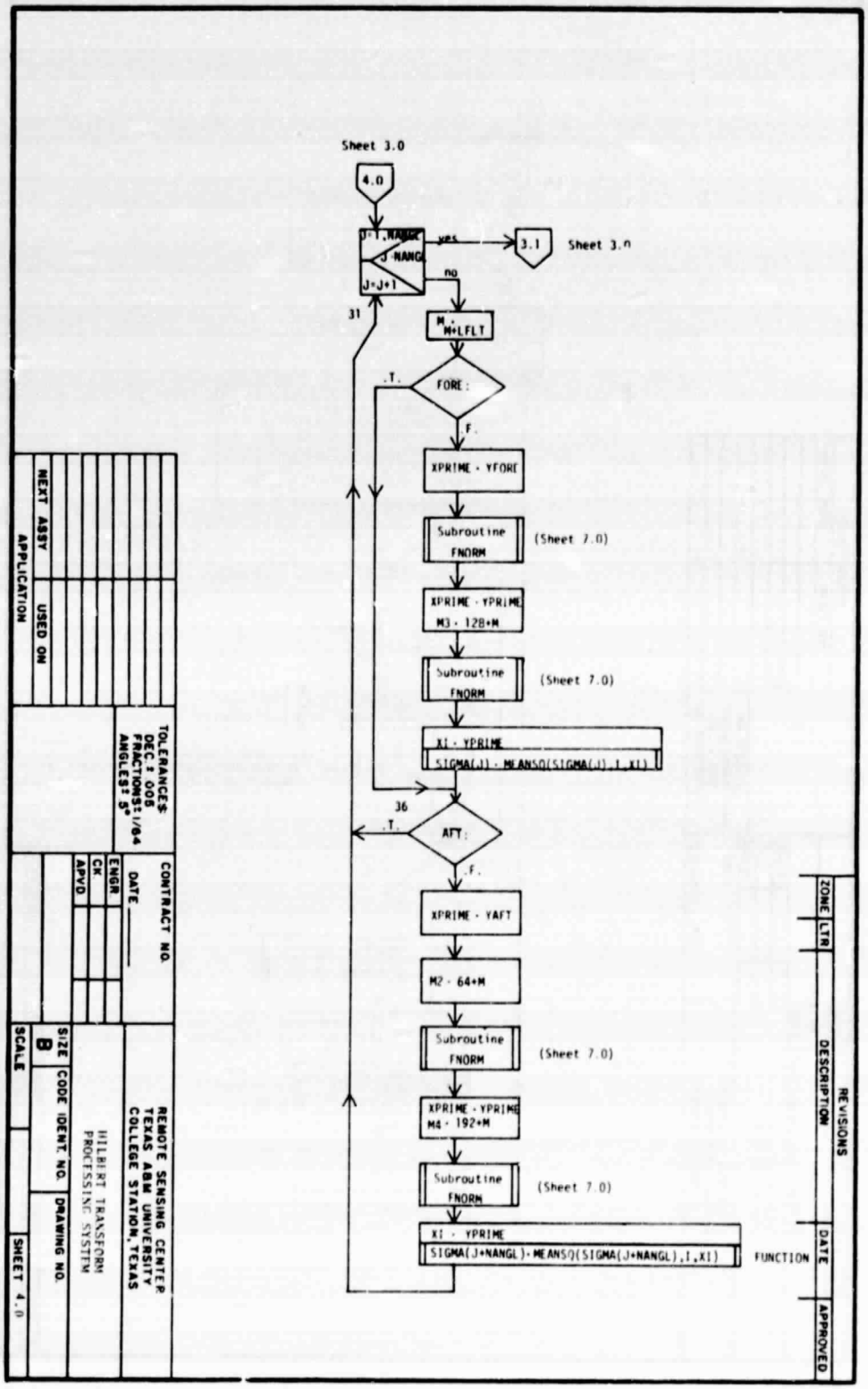
Sheet 3.0
4.0
J=1,NANGL
J=NANGL
J=J+1
yes
3.1
Sheet 3.0
no
31
M=M+LFLT
FORE:
.T.
.F.
XPRIME = YFORE
Subroutine FNORM
(Sheet 7.0)
XPRIME = YPRIME
M3 = 128+M
Subroutine FNORM
(Sheet 7.0)
XI = YPRIME
SIGMA(J) = MEANSQ(SIGMA(J),I,XI)
36
AFT:
.T.
.F.
XPRIME = YAFT
M2 = 64+M
Subroutine FNORM
(Sheet 7.0)
XPRIME = YPRIME
M4 = 192+M
Subroutine FNORM
(Sheet 7.0)
XI = YPRIME
SIGMA(J+NANGL) = MEANSQ(SIGMA(J+NANGL),I,XI)
FUNCTION
REVISIONS
ZONE
LTR
DESCRIPTION
DATE
APPROVED
NEXT ASSY
USED ON
APPLICATION
TOLERANCES:
DEC ± .005
FRACTIONS ± 1/64
ANGLES ± 5°
CONTRACT NO.
DATE
ENGR
CK
APVD
REMOTE SENSING CENTER
TEXAS A&M UNIVERSITY
COLLEGE STATION, TEXAS
HILBERT TRANSFORM
PROCESSING SYSTEM
SIZE
B
CODE IDENT. NO.
DRAWING NO.
SCALE
SHEET 4.0

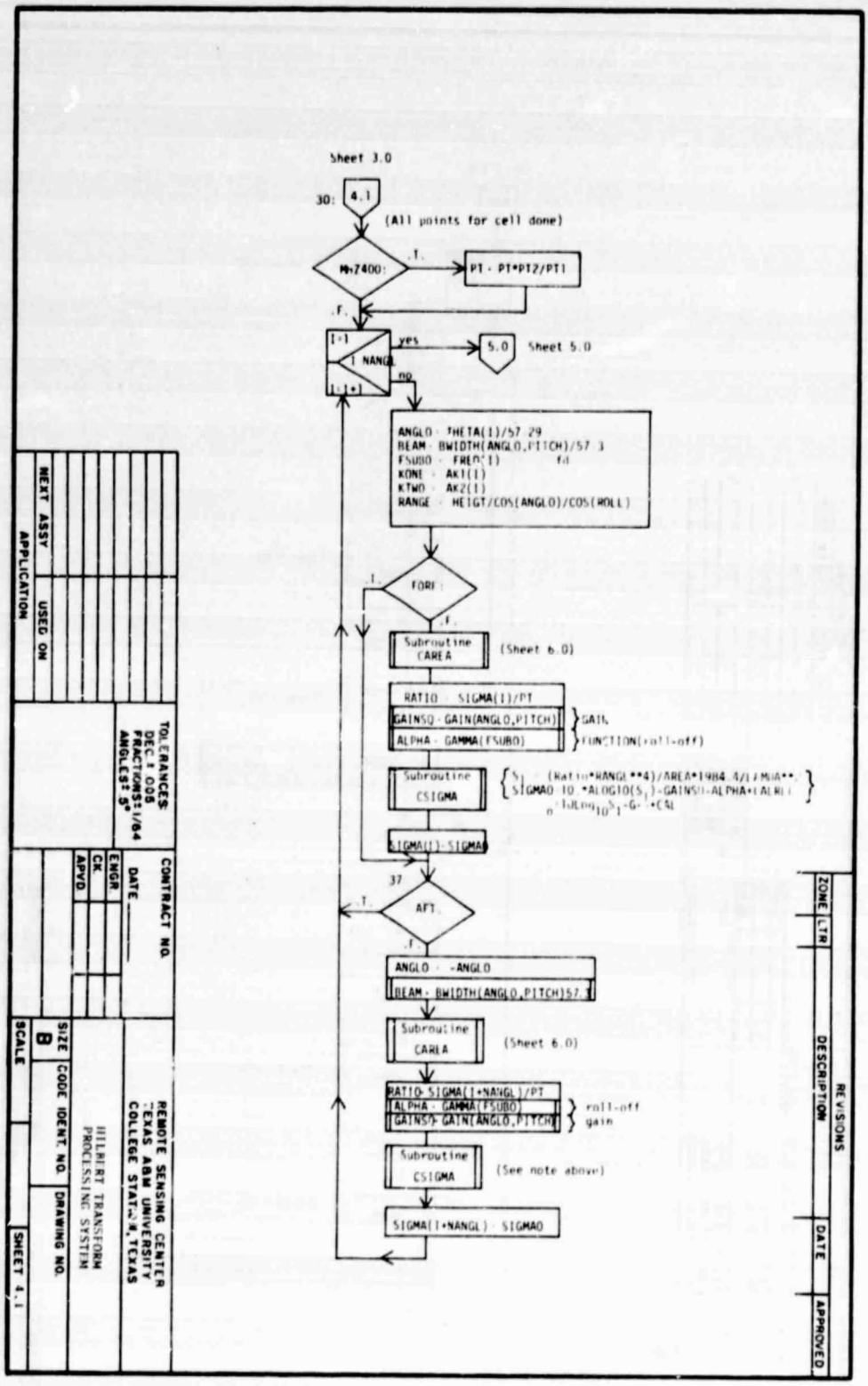
Sheet 3.0
30:
4.1
(All points for cell done)
M>7400:
.T.
PT = PT*PT2/PT1
.F.
I=1
I NANGL
I=I+1
yes
5.0
Sheet 5.0
no
ANGLO = THETA(I)/57.29
BEAM = BWIDTH(ANGLO,PITCH)/57.3
FSUBO = FREQ(I)
KONE = AK1(I)
KTWO = AK2(I)
RANGE = HEIGT/COS(ANGLO)/COS(ROLL)
FORI
.T.
.F.
Subroutine CAREA
(Sheet 6.0)
RATIO = SIGMA(I)/PT
GAINSQ = GAIN(ANGLO,PITCH)
ALPHA = GAMMA(FSUBO)
GAIN
FUNCTION(roll-off)
Subroutine CSIGMA
SIGMA(I) = SIGMAO
37
AFT
.T.
.F.
ANGLO = -ANGLO
BEAM = BWIDTH(ANGLO,PITCH)/57.3
Subroutine CAREA
(Sheet 6.0)
RATIO = SIGMA(I+NANGL)/PT
ALPHA = GAMMA(FSUBO)
GAINSQ = GAIN(ANGLO,PITCH)
roll-off
gain
Subroutine CSIGMA
(See note above)
SIGMA(I+NANGL) = SIGMAO
REVISIONS
ZONE
LTR
DESCRIPTION
DATE
APPROVED
NEXT ASSY
USED ON
APPLICATION
TOLERANCES
DEC. ± .005
FRACTIONS ±1/64
ANGLES ± .5°
CONTRACT NO.
DATE
ENGR.
CK.
APVD.
REMOTE SENSING CENTER
TEXAS A&M UNIVERSITY
COLLEGE STATION, TEXAS
SIZE
B
CODE IDENT NO.
DRAWING NO.
HILBERT TRANSFORM
PROCESSING SYSTEM
SCALE
SHEET 4.1

ORIGINAL PAGE IS
OF POOR QUALITY

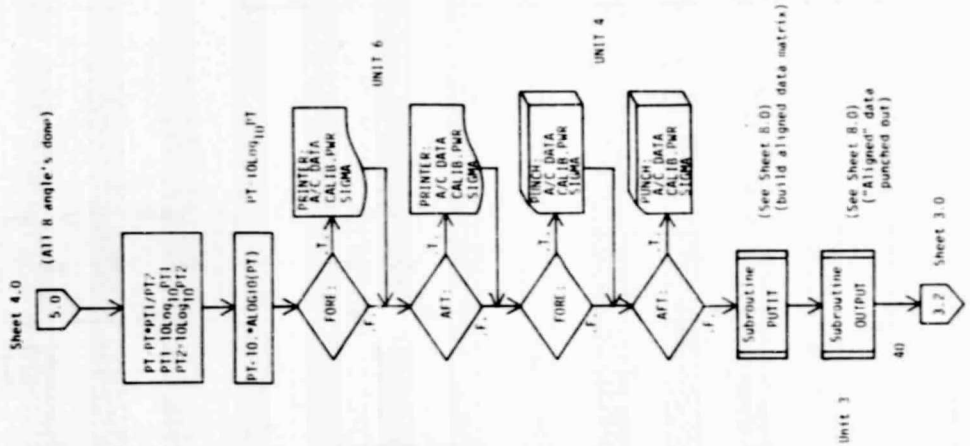


| REVISIONS | | | | |
|---|---|---|---|---|
| ZONE | LTR | DESCRIPTION | DATE | APPROVED |

| | | | |
|---|---|---|---|
| NEXT ASSY | USED ON | TOLERANCES: DEC ± .005 FRACTIONS ± 1/64 ANGLES ± .5° | CONTRACT NO. DATE |
| APPLICATION | | | ENGR. CK. APVD. |

REMOTE SENSING CENTER
TEXAS A&M UNIVERSITY
COLLEGE STATION, TEXAS

HILBERT TRANSFORM
PROCESSING SYSTEM

| SIZE | CODE IDENT. NO. | DRAWING NO. |
|---|---|---|
| B | | |
| SCALE | | SHEET 5.0 |

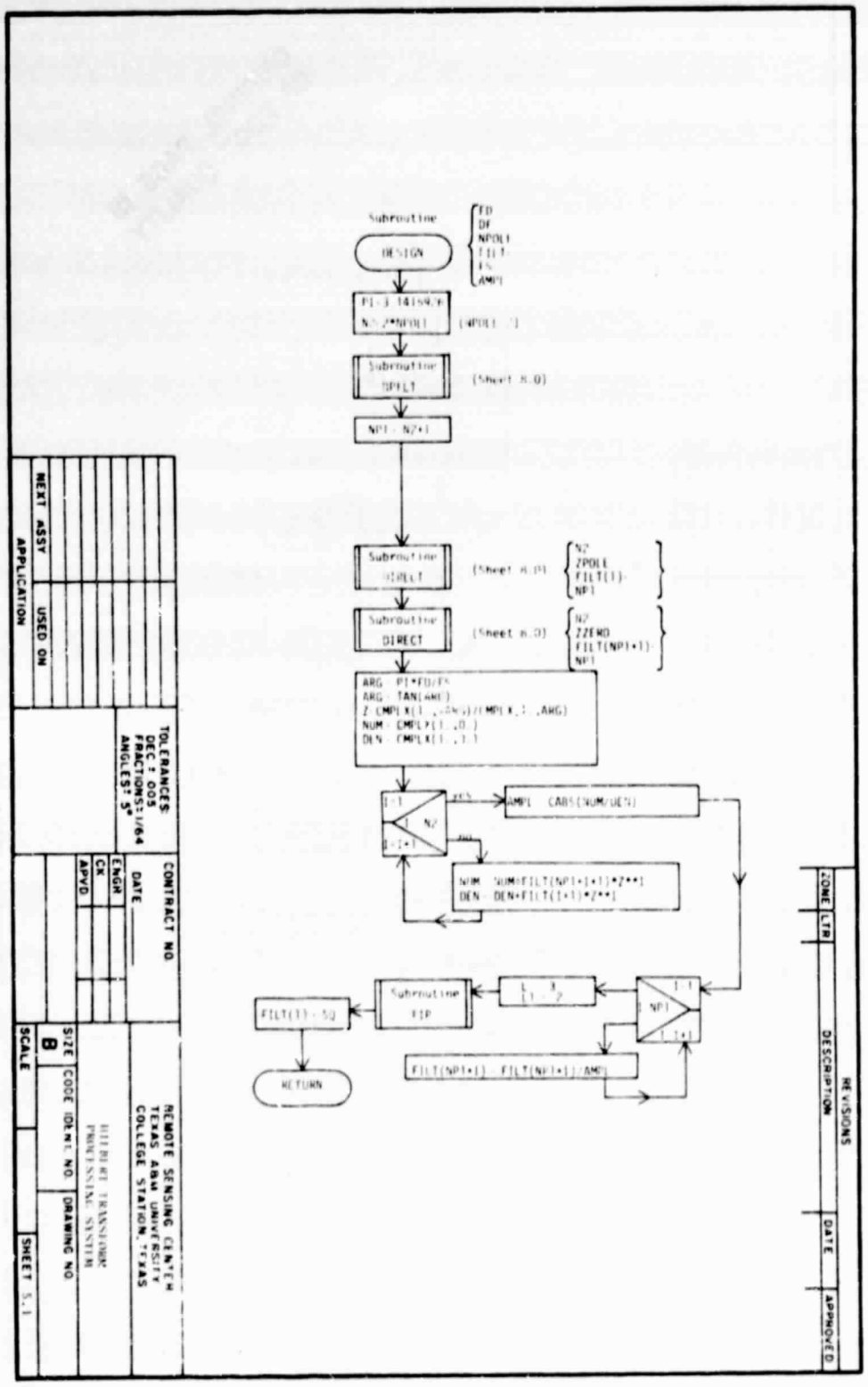
Subroutine
DESIGN
FD
DF
NPOLE
FILT
FS
AMPL
PI=3.1415926
N2=2*NPOLE
(NPOLE=2)
Subroutine
DPFLT
(Sheet 8.0)
NP1=N2+1
Subroutine
DIRECT
(Sheet 8.0)
N2
ZPOLE
FILT(1)
NP1
Subroutine
DIRECT
(Sheet 8.0)
N2
ZZERO
FILT(NP1+1)
NP1
ARG=PI*FD/FS
ARG=TAN(ARG)
Z=CMPLX(1.,-ARG)/CMPLX(1.,ARG)
NUM=CMPLX(1.,0.)
DEN=CMPLX(1.,1.)
I=1
I=N2
I=I+1
yes
no
AMPL=CABS(NUM/DEN)
NUM=NUM+FILT(NP1+I+1)*Z**I
DEN=DEN+FILT(I+1)*Z**I
I=1
I=NP1
I=I+1
L=3
L1=2
Subroutine
FIR
FILT(1)=SQ
RETURN
FILT(NP1+1)=FILT(NP1+1)/AMPL
REVISIONS
ZONE
LTR
DESCRIPTION
DATE
APPROVED
TOLERANCES:
DEC: .005
FRACTIONS: 1/64
ANGLES: 5°
NEXT ASSY
USED ON
APPLICATION
CONTRACT NO.
DATE
ENGR
CK
APVD
REMOTE SENSING CENTER
TEXAS A&M UNIVERSITY
COLLEGE STATION, TEXAS
HILBERT TRANSFORM
PROCESSING SYSTEM
SIZE
B
CODE IDENT NO.
DRAWING NO.
SCALE
SHEET 5.1

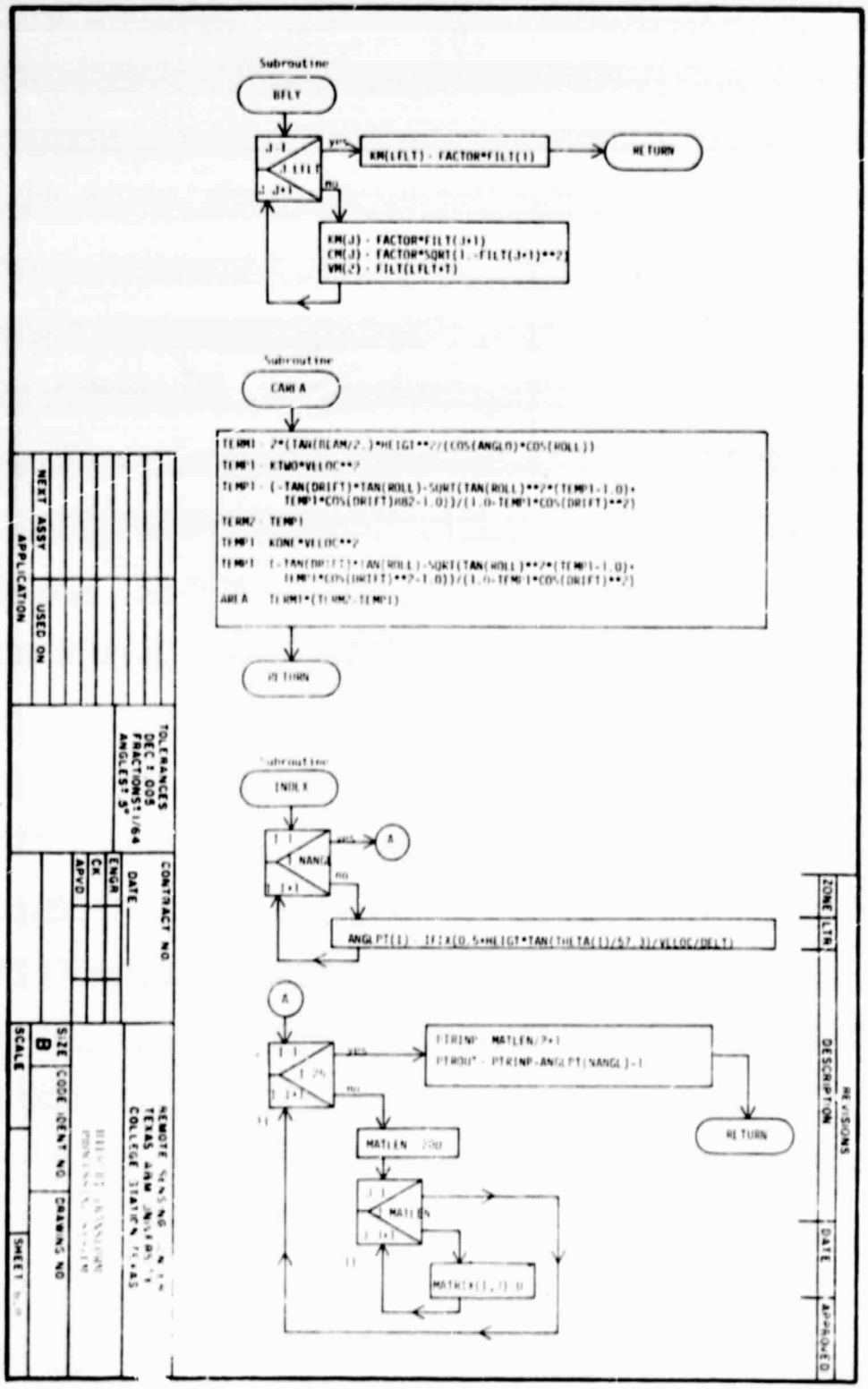
Subroutine
BFLY
J-1
J LFLT
J J+1
yes
no
KM(LFLT) - FACTOR*FILT(1)
RETURN
KM(J) - FACTOR*FILT(J+1)
CM(J) - FACTOR*SQRT(1.-FILT(J+1)**2)
VM(J) - FILT(LFLT+T)
Subroutine
CAREA
TERM1 - 2*(TAN(BEAM/2.)*HEIGT**2/(COS(ANGLO)*COS(ROLL))
TEMP1 - KTWO*VELOC**2
TEMP1 - (-TAN(DRIFT)*TAN(ROLL)-SQRT(TAN(ROLL)**2*(TEMP1-1.0)+
TEMP1*COS(DRIFT)**2-1.0))/(1.0-TEMP1*COS(DRIFT)**2)
TERM2 - TEMP1
TEMP1 - KONE*VELOC**2
TEMP1 - (-TAN(DRIFT)*TAN(ROLL)-SQRT(TAN(ROLL)**2*(TEMP1-1.0)+
TEMP1*COS(DRIFT)**2-1.0))/(1.0-TEMP1*COS(DRIFT)**2)
AREA - TERM1*(TERM2-TEMP1)
RETURN
Subroutine
INDEX
I 1
I NANGL
I I+1
yes
no
A
ANGLPT(I) - IFIX(0.5+HEIGT*TAN(THETA(I)/57.3)/VELOC/DELT)
A
I 1
I 25
I I+1
yes
no
PTRINP - MATLEN/2+1
PTROUT - PTRINP-ANGLPT(NANGL)-1
RETURN
MATLEN - 200
J 1
J MATLEN
J J+1
MATRIX(I,J)=0
REVISIONS
ZONE
LTR
DESCRIPTION
DATE
APPROVED
NEXT ASSY
USED ON
APPLICATION
TOLERANCES
DEC ± .005
FRACTIONS ± 1/64
ANGLES ± 5°
CONTRACT NO.
DATE
ENGR
CK
APVD
REMOTE SENSING
TEXAS A&M UNIVERSITY
COLLEGE STATION TEXAS
SIZE
B
CODE IDENT NO
DRAWING NO
SCALE
SHEET

Subroutine
FNORM
XPL(N+1)=XPRIME
YPRIME = 0
I=1
I N
I=I+1
YES
XM(1) = XPL(1)
YPRIME = YPRIME+YM(1)*XM(1)
YPRIME = YPRIME*XM(N+1)
RETURN
NO
M = N-I+1
XPL(M)=CM(M)*XPL(M+1)-XM(M)*XM(M)
XM(M+1)=XM(M)*XPL(M+1)+CM(M)*XM(M)
YPRIME=YPRIME+YM(M+1)*XM(M+1)
Subroutine
SIGNS
SIGNS(XSIN,XCOS,YFORE,YAFT,Z,DELAY)
Z(38),DELAY(20)
DELAY & Z are initialized to 0 for
each new input record
ND = 19
ND1 = ND-1
XN = 0.00120*XCOS
Z(5) = Z(8)-1.6R4*(Z(6)+Z(7)+6.36)*Z(4)+XN
Z(16)
Z(24)
Z(32)
Z(36)
See Program Listing
YN = Z(38)+Z(38)
YFORE = YN+DELAY(20)
YAFT = YN-DELAY
I=1
I ND1
I=I+1
YES
DELAY(1) = XSIN
NO
M = ND-I+1
DELAY(M)=DELAY(M-1)
10
I=1
I 17
I=I+1
YES
Z(1) = XN
NO
RETURN
M = 18-I+1
Z(M) = Z(M-1)
REVISIONS
ZONE
LTR
DESCRIPTION
DATE
APPROVED
NEXT ASSY
USED ON
APPLICATION
TOLERANCES
DEC ± .005
FRACTIONS ± 1/64
ANGLES ± 5°
ENGR
CK
APVD
CONTRACT NO.
DATE
REMOTE SENSING CENTER
TEXAS A&M UNIVERSITY
COLLEGE STATION, TEXAS
SIZE
B
CODE IDENT NO.
DRAWING NO.
SCALE
SHEET

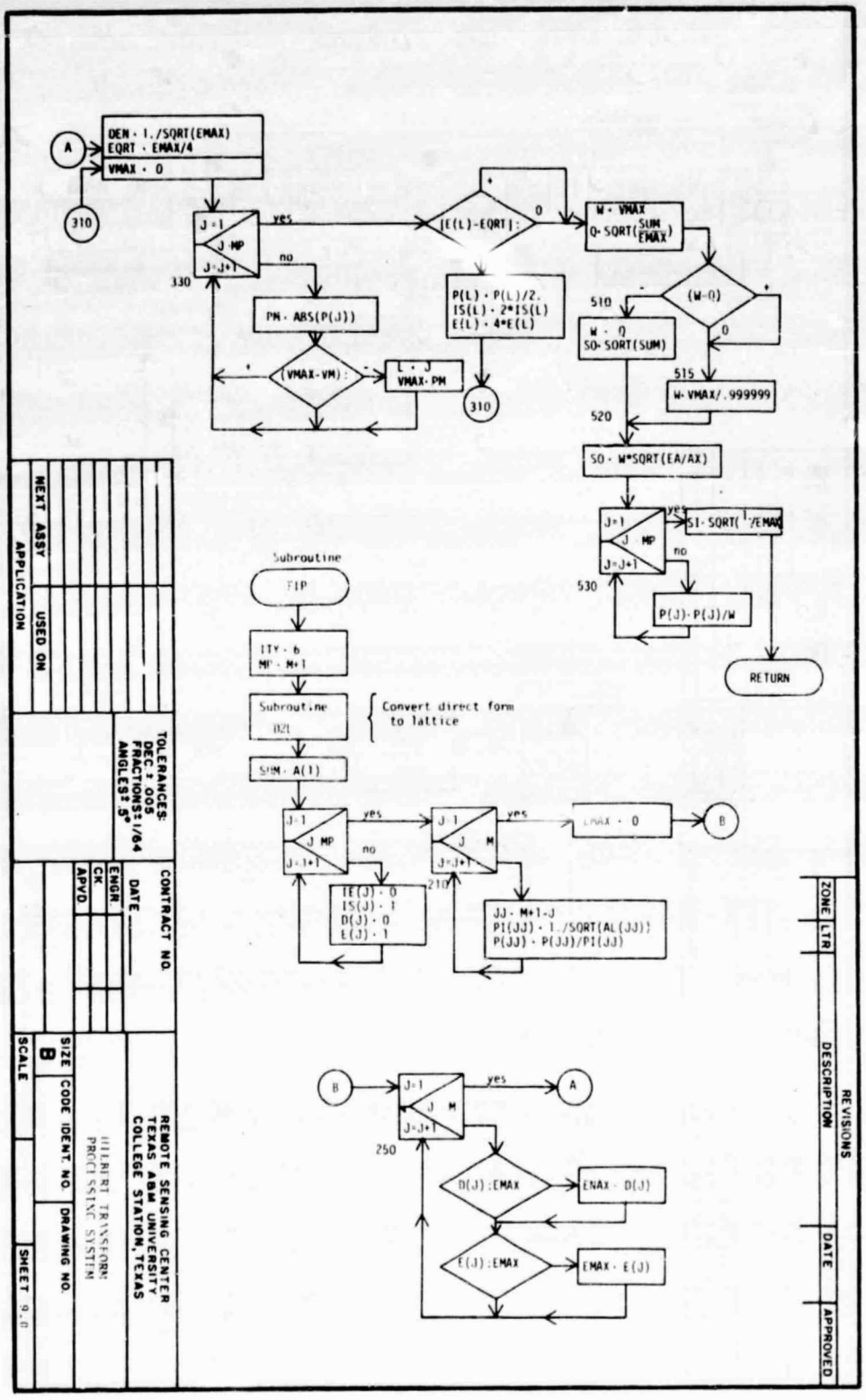


ORIGINAL PAGE IS
OF POOR QUALITY

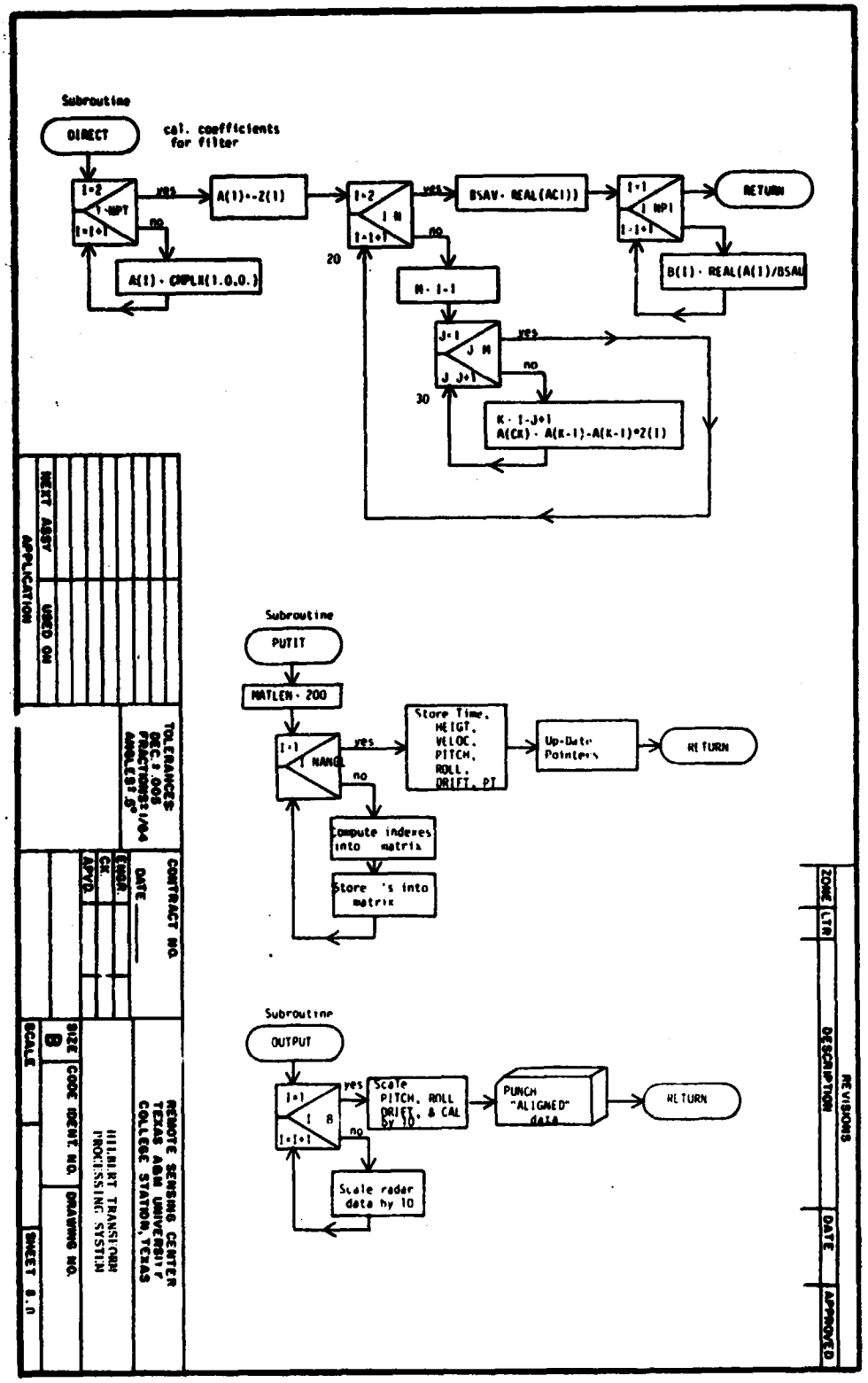
Subroutine
DIRECT
cal. coefficients for filter
I=2
I=NPT
I=I+1
yes
no
A(I)=-Z(I)
A(I)=CMPLX(1.0,0.)
I=2
I=N
I=I+1
yes
no
20
BSAV=REAL(AC1))
I=1
I=NP1
I=I+1
RETURN
B(I)=REAL(A(I)/BSAV
M=I-1
J=1
J=M
J=J+1
yes
no
30
K=I-J+1
A(CK)=A(K-1)-A(K-1)*Z(I)
Subroutine
PUTIT
MATLEN=200
I=1
I=NANGL
yes
no
Store Time, HEIGT, VELOC, PITCH, ROLL, DRIFT, PT
Up-Date Pointers
RETURN
Compute indexes into matrix
Store 's into matrix
Subroutine
OUTPUT
I=1
I=B
I=I+1
yes
no
Scale PITCH, ROLL DRIFT, & CAL by 10
PUNCH "ALIGNED" data
RETURN
Scale radar data by 10
NEXT ASSY
USED ON
APPLICATION
TOLERANCES: DEC.±.005 FRACTIONS±1/64 ANGLES±.5°
CONTRACT NO.
DATE
ENGR.
CK.
APVD.
REMOTE SENSING CENTER
TEXAS A&M UNIVERSITY
COLLEGE STATION, TEXAS
HILBERT TRANSFORM PROCESSING SYSTEM
SIZE
B
CODE IDENT. NO.
DRAWING NO.
SCALE
SHEET 8.0
REVISIONS
ZONE
LTR
DESCRIPTION
DATE
APPROVED

APPENDIX B

VIEWGRAPHS OF SEPTEMBER 1977

## SCATTEROMETER DATA PROCESSING

### SUMMARY

DISCREPANCY: MISINTERPRETATION OF AIRCRAFT FLIGHT LOGS/TAPE I.D.

1. 15 dB GAIN ASSUMED IN ONE CHANNEL OF THE 1.6 GHz SYSTEM.
2. MISINTERPRETATION AS TO WHAT ROLL-OFF FILTER WAS USED ON SOME DATA RUNS.
3. TERMINOLOGY DENOTING IN-PHASE AND QUADRATURE CHANNELS OF 1.6 GHz AND 13.3 GHz SYSTEM CONFUSING AND MISUNDERTSTOOD.

ACTION:

1. VERBAL CLARIFICATION OF MEANING OF FLIGHT LOG INFORMATION (CORRECTED 1. AND 2.)
2. SPECTRUM ANALYSIS TO DETERMINE CHANNEL CONTAINING CALIBRATION SIGNAL AND TIME HISTORY PLOTS OF SEVERAL ANGLES OF NON-SHIFTED PROCESSED DATA TO DETERMINE WHICH OF THE QUADRATURE CHANNELS LEAD AND WHICH LAGS IN-PHASE.

RESULT: THE CALIBRATION SIGNAL WAS FOUND TO BE ON OPPOSITE QUADRATURE CHANNELS FOR THE 1.6 GHz AND 13.3 GHz RADARS.

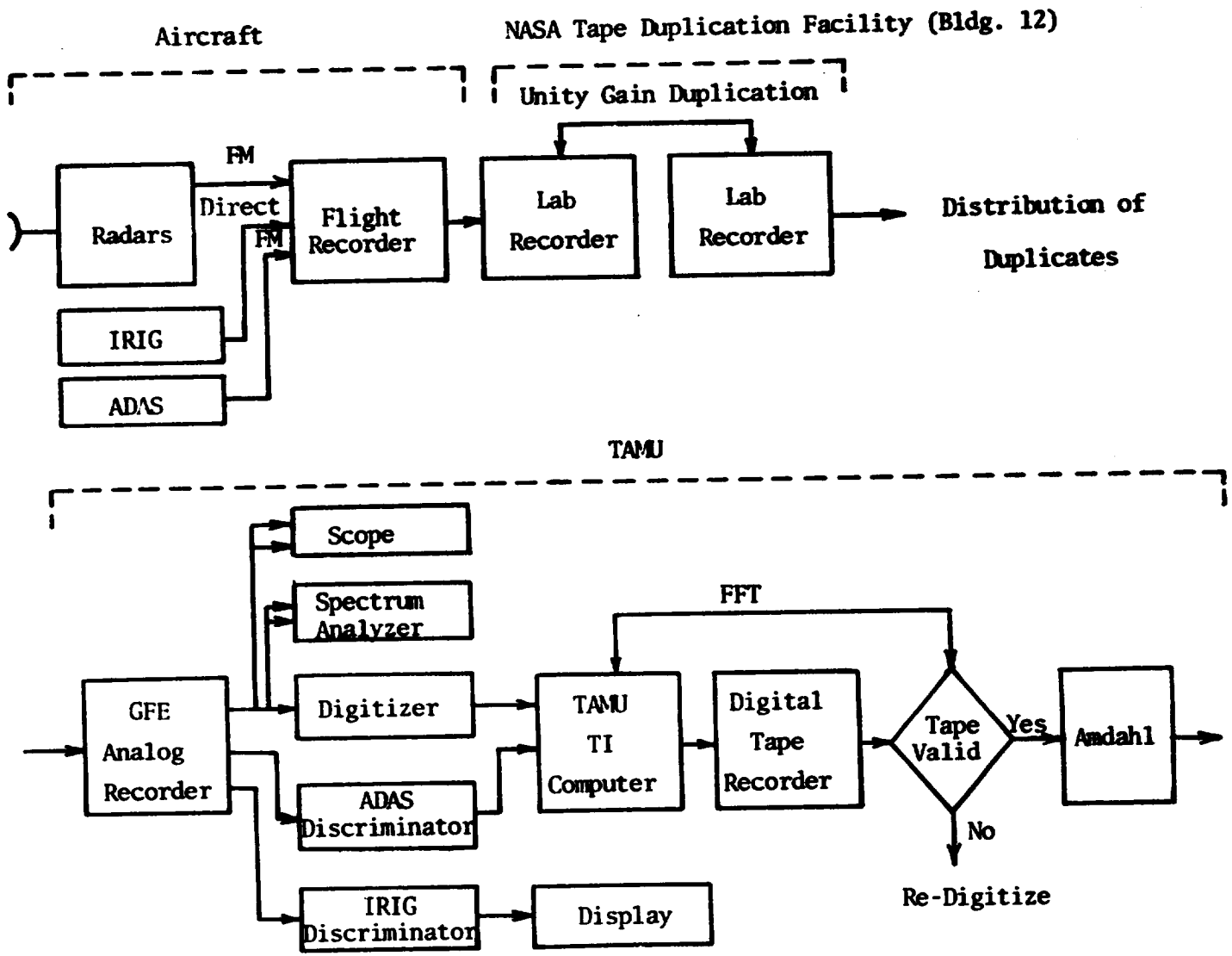
Aircraft
NASA Tape Duplication Facility (Bldg. 12)
Unity Gain Duplication
FM
Direct
FM
Radars
Flight Recorder
Lab Recorder
Lab Recorder
Distribution of Duplicates
IRIG
ADAS
TAMU
Scope
Spectrum Analyzer
FFT
GFE Analog Recorder
Digitizer
TAMU TI Computer
Digital Tape Recorder
Tape Valid
Yes
Amdahl
ADAS Discriminator
No
Re-Digitize
IRIG Discriminator
Display

SCATTEROMETER DATA PROCESSING (CONTINUED)

SUMMARY (CONTINUED)

DISCREPANCY: INCONSISTANCY OF TIME REFERENCE

1. ADAS INFORMATION COULD NOT BE DISCRIMINATED
   - POOR TAPE REPRODUCE CAPABILITY (GFE RECORDER)
   - ADAS DISCRIMATOR ADJUSTMENT
2. IRIG TIME USED TO PROCESS DATA
   - DID NOT PROVIDE ONE TO ONE TIME CORRELATION BETWEEN RADAR DATA AND PHOTOGRAPH
   - DID NOT PROVIDE TIME CONSISTANCE BETWEEN RADARS EVEN WITHIN SAME RUN

ACTION:
1. ADJUSTMENTS MADE TO ADAS DISCRIMATOR
2. BETTER QUALITY TAPE RECORDER OBTAINED
3. ADAS TIME REFERENCE USED FOR ALL PROCESSING
   - THIS PROVIDES TIME CONSISTENCY BETWEEN ALL RADARS, DATA RUNS, AND PHOTOGRAPHY

SCATTEROMETER DATA PROCESSING (CINTINUED)

SUMMARY (CONTINUED)

DISCREPANCY: MISALIGNMENT OF SIGMA FOR EACH GROUND CELL.

1. AVERAGE FLIGHT PARAMETERS USED TO COMPUTE AN AVERAGE TIME SHIFT FOR EACH ANGLE DURING EACH RUN
2. THE AVERAGE VELOCITIES THAT WERE USED TO COMPUTE SHIFTS INCORRECT.
   - AVERAGES WERE COMPUTED FOR TIMES ON FLIGHT LOGS
   - TIMES ON FLIGHT LOG INCLUDED SET-UP FOR DATA RUN AND USUALLY CONTAINED LARGE VELOCITY VARIATIONS
   - VELOCITY ON FLIGHT LOG NOT ALWAYS REPRESENTATIVE OF VELOCITY DURING DATA RUN

ACTION: PROGRAM MODIFIED SO THAT FLIGHT PARAMETERS ARE UPDATED CONTINUOUSLY FROM ADAS DURING SIGMA COMPUTATIONS. TIME SHIFTS, AREA CALCULATIONS, ETC. ARE NOW AS ACCURATE AS POSSIBLE.

SCATTEROMETER DATA PROCESSING (CONTINUED)

SUMMARY (CONTINUED)

DISCREPANCY: CALIBRATION CONSTANT USED IN PROCESSING DATA

1. COMPENSATION OF CALIBRATION CONSTANT FOR THE MEASUREMENT TECHNIQUE IMPROPER

2. COMPENSATION OF THE CALIBRATION SIGNAL FOR SIGN SENSING IMPROPER (IN ANALOG PROCESSING)

ACTION: PROGRAM CORRECTED AFTER AGREEMENT WAS REACHED ON PROPER COMPENSATION

(NOTE THAT THIS DISCREPANCY ONLY INTRODUCED A CONSTANT OFFSET IN THE PROCESSED DATA.)

SCATTEROMETER DATA PROCESSING (CONTINUED)

SUMMARY (CONTINUED)

DISCREPANCY: SCATTEROMETER HARDWARE INCONSISTANCIES

1. 1.6 VV AND 1.6 VH DATA NO GOOD BEFORE MISSION 362
   - SWITCH IMPEDANCE MISMATCH
2. 400 MHz HORIZONTALLY POLARIZED ANTENNA HAD A LOOSE CONNECTOR DURING JSME FLIGHTS

ACTION: CORRECTED BY E&D PERSONNEL

SCATTEROMETER DATA PROCESSING (CONTINUED)

SUMMARY (CONTINUED)

DISCREPANCY: INABILITY TO REPRODUCE RAW DATA FROM ANALOG TAPES WITHOUT DROPOUTS, CLIPPING, OR ADDITIVE NOISE

1. ANALOG GFE TAPE RECORDER AVAILABLE TO TAMU WAS AN OLD FLIGHT RECORDER THAT HAD VERY POOR REPRODUCE CAPABILITY

2. ANALOG DATA TAPES ARE DUPLICATES OF POOR QUALITY WITH CARRIER LEVELS EXTREMELY LOW

3. DUPLICATE FLIGHT TAPES GIVEN TO TAMU FOR PROCESSING ARE OF POOR MECHANICAL QUALITY (REUSED TAPES)

   NOTE: LITTLE QUALITY CONTROL IS APPARENT IN DUPLICATION PROCESS

4. FM MODULATION IN RECORDING RADAR DATA ON AIRCRAFT EXCEEDS THE 40% DEVIATION LIMIT OF THE RECORDERS MUCH OF THE TIME

5. CONSISTANCY OF AIRCRAFT RECORDER SET-UP IS POOR, ADDING TO DIFFICULTIES IN 3.

SCATTEROMETER DATA PROCESSING (CONTINUED)

SUMMARY (CONTINUED)

6. RECORDER CALIBRATION LEVELS PUT ON DATA TAPE ARE OF VERY POOR QUALITY

ACTION:

1. A BETTER QUALITY GFE LABORATORY TAPE RECORDER HAS BEEN PROVIDED TO TAMU AND INTEGRATED INTO THE DATA PROCESSING SYSTEM.

2. TAMU DIGITIZER MODIFIED TO BE COMPATIBLE WITH INPUTS OF ± 5 VOLTS IN ORDER TO HANDLE THE OVER-MODULATED RADAR DATA
   - TESTS WERE PERFORMED TO INSURE THAT THE REDUCTION IN DIGITIZATION RESOLUTION DID NOT AFFECT THE FINAL SIGMA

3. QUALITY CONTROL OF DATA RECORDING, TAPE REPRODUCE AND TAPES MUST BE DONE BY NASA.

## SCATTEROMETER DATA PROCESSING (CONTINUED)

### SUMMARY (CONTINUED)

DISCREPANCY: UNCERTAINTY IN ANTENNA PATTERNS

1. 13.3 GHz DATA HAVE CONSISTENT "HUMPS" AT 30° AND 50°

2. 13.3 GHz PATTERN (MEASURED IN 1976 BY NASA) HAS STEEP GRADIENTS AT 30° AND 45° - 50°

3. 1.6 GHz DATA HAVE CONSISTENT "HUMP" AT 20°

ACTION: 1. ATTEMPT TO APPROXIMATE MORE REALISTIC PATTERN

2. PROCESS DATA AT 5°, 10°, 15°, 20°, 25°, 35°, 45°, AND 55°.

13.3 GHz

AFT ANTENNA PATTERN

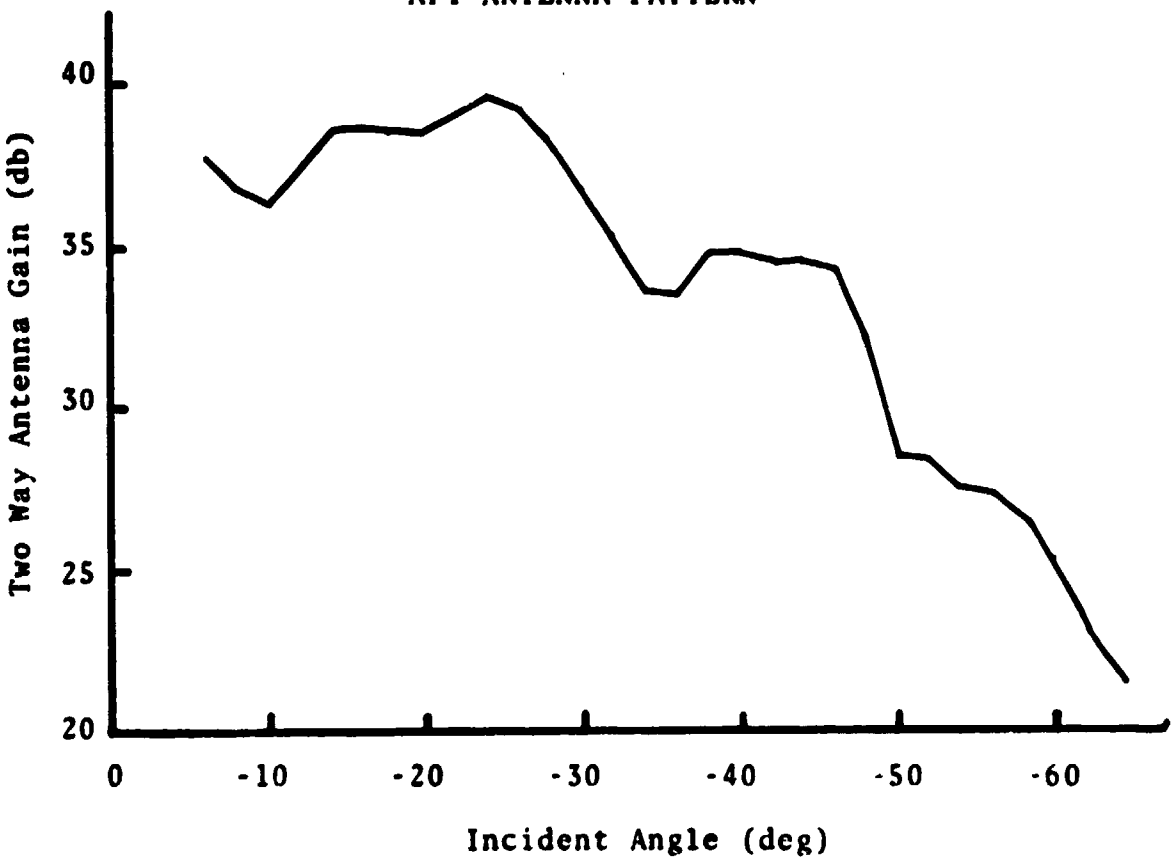

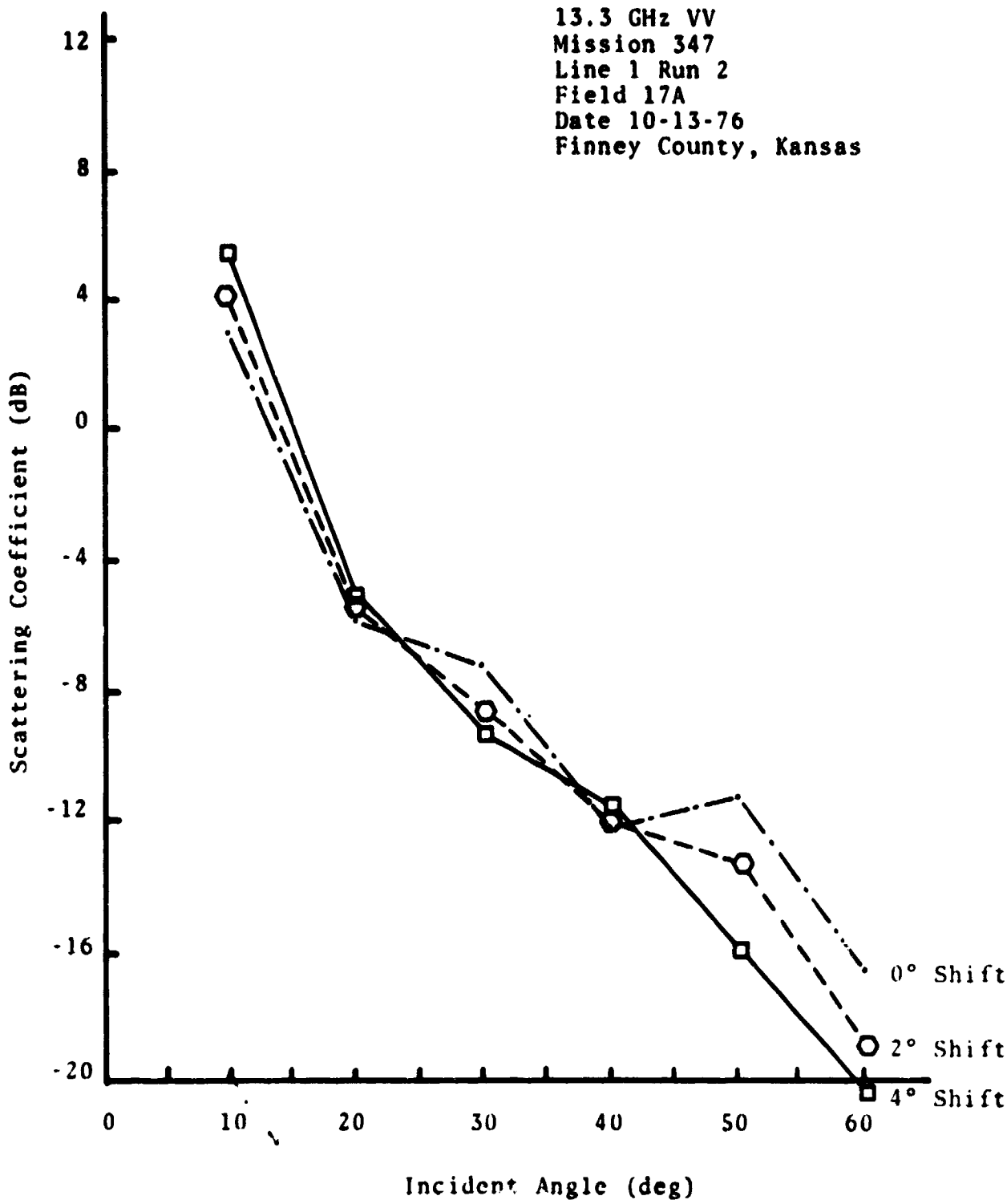
13.3 GHz VV
Mission 347
Line 1 Run 2
Field 17A
Date 10-13-76
Finney County, Kansas
Scattering Coefficient (dB)
12
8
4
0
-4
-8
-12
-16
-20
0
10
20
30
40
50
60
Incident Angle (deg)
0° Shift
2° Shift
4° Shift

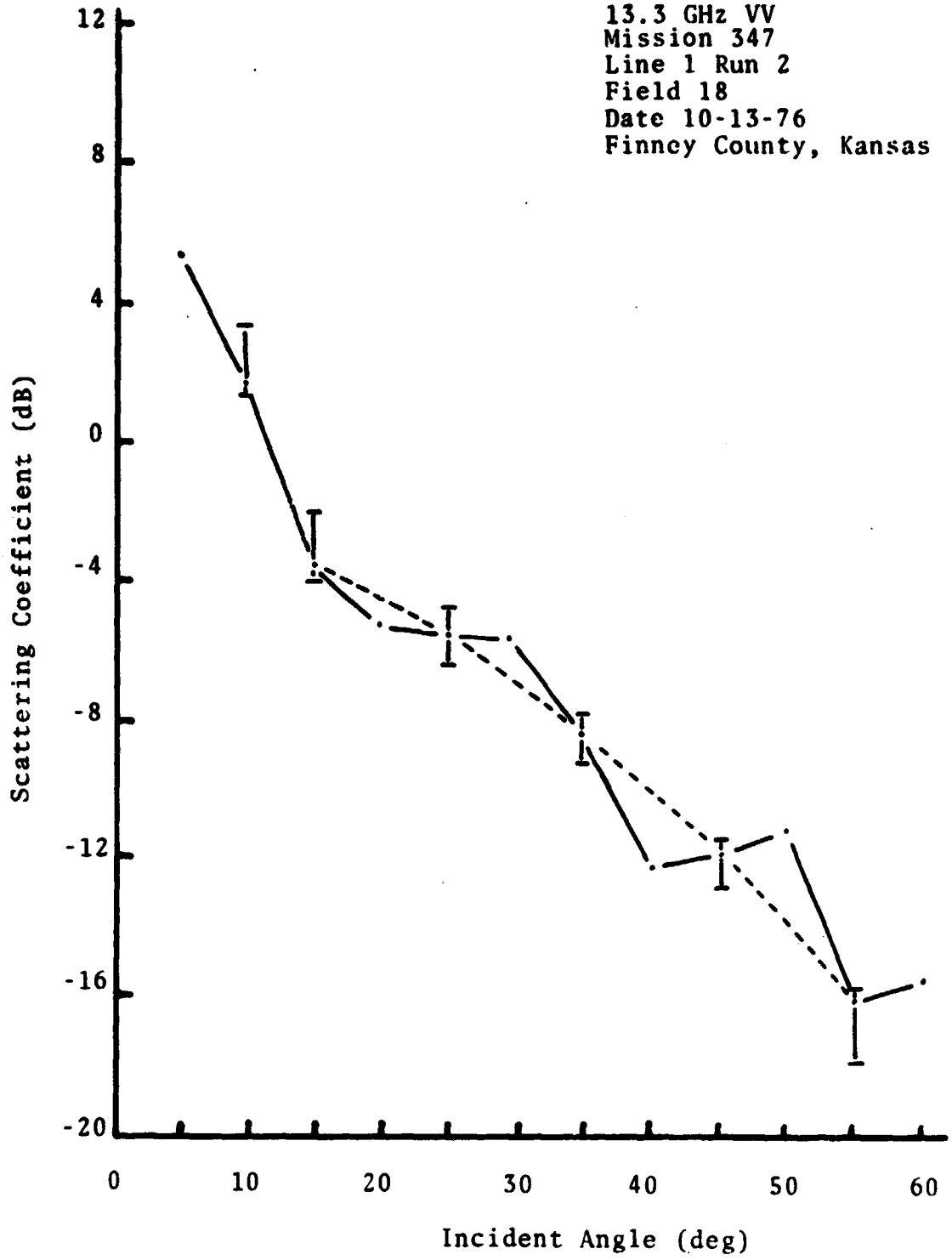
13.3 GHz VV
Mission 347
Line 1 Run 2
Field 18
Date 10-13-76
Finney County, Kansas
Scattering Coefficient (dB)
12
8
4
0
-4
-8
-12
-16
-20
0
10
20
30
40
50
60
Incident Angle (deg)

## SCATTEROMETER DATA PROCESSING (CONTINUED)

### STATUS

1. CURRENTLY PROCESSING PORTIONS OF FCF OVER DEATH VALLEY TO FURTHER INVESTIGATE ANTENNA PATTERN DISCREPANCIES AND AS FINAL CHECK ON SOFTWARE SYSTEM

2. A LIST OF SPECIFIC ADAS TIMES ARE BEING PROVIDED TO TAMU BY NASA FOR PROCESSING

3. PROCESSING WILL COMMENCE AFTER RESOLUTION OF ANTENNA PATTERN UNCERTAINTIES

4. CHARACTER OF 400 MHZ DATA UNEXPLAINED AND MUST BE TAKEN AT FACE VALUE UNTIL MORE DATA ARE PROCESSED

# APPENDIX C

## LISTING FOR PROGRAM SCATTER.CZTA78

```
C
C         >==  TEST PROGRAM FOR SIMULATING CHIRP-Z ALGORITHM  ==<
C
C
C         DEVELOPED AT TEXAS A&M UNIVERSITY
C                      REMOTE SENSING CENTER
C
C                      SEPT78 - MAY79
C
C         ALGORITHM PERFORMS COMPLEX DFT (X+JY) ON TWO INPUT CHANNELS
C
C
C  SYSTEM PROCESSES SCATTEROMETER DATA FOR 13.3, 1.6, 4.75, OR .4GHZ
C
C             >>>>>   VERSION DATED MAY 1979   <<<<<<
C
C   *****   INPUT PARAMETERS:
C
C       CARD #1 POINTS= COL 1-4, I4 (1024 OR 2048)
C               SYSK= COL 6-10, F5.0
C               CABL= COL 11-15, F5.0
C               DELT= COL 16-20, F5.0(NBR SECS TO PROCESS)
C               TS(1)= COL 21-22, F2.0(START OF
C               TS(2)= COL 23-24, F2.0(TIME SEGMENT .
C               TS(3)= COL 25-27,F3.1 HHMMSSS)
C
C
C       CARD#2  80 CHARACTERS OF COMMENTS
C
C       CARD#3  INCR= COL 1-5,I5(FFT LENGTH)
C               ITYPE= COL 6-10,I5 (1=13.3, 2=1.6, 3=4.75, 4=0.4 GHZ)
C               DT    = COL 11-15, F5.3,(AVG RCD TIME INTERVAL)
C               IBUG = COL 16-20    ,I5, (DATA DUMP SWITCH)
C               KPOLZ= COL 21-25,  I5, (SET IF V-POLARIZED C-BAND DATA)
C               IPLOT= COL 26-30,  I5,(SET IF SPECTRUM PLOT OF 1ST RCD)
C               CELL= COL 31-35,  F5.0(RESOLUTION,INSTANTANEOUS)
C
C
C
      DIMENSION ZW(8),A(8),BDW(8),IFDL(8),IFDR(8),GAINSQ(8),BEAM(8)
      DIMENSION MATRIX(18,100),R(8),TS(3),FDOP(8),THETA(8),DFDOP(8)
      DIMENSION SIGMA(8),IBPTR(8),FREQP(1024),AFT(1024),AFTC(1024)
      DIMENSION TRIX(16),PSPEC(8),ANGT(8),PROPT(8),ITHETA(8)
      INTEGER*2 TIME(3),ADAS(5),SINE(2048),COSINE(2048),ICOM(40)
      INTEGER POINTS
      REAL NTS
      REAL LAMDA,KONE,KTWO
      COMPLEX FRS(2048),CMPLX,FRC(2048)
      COMMON/FILT/ITYPE,KPOLZ
      COMMON/ITAPE/TIME,ADAS,SINE,COSINE
```

```
      COMMON/KAREA/KONE,KTWO
      COMMON/RAT/FINCR,FCAL,FSAMP,INCR
      DATA FORPI/12.56637/
      DATA MATRIX/1800*-999/
C  AFT ANGLE SET IN DEGREES, UP TO EIGHT VALUES
      DATA THETA/5.,10.,15.,20.,25.,35.,40.,45./
      DATA ITHETA/5,10,15,20,25,35,40,45/
C
C  GET SYSTEM RUN PARAMTERS AND COMMENTS
      READ(5,10) POINTS,SYSK,CABL,DELT,TS
   10 FORMAT(I4,1X,3F5.0,2F2.0,F3.1)
C
C  COMMENTS INCLUDE MSN,LINE,RUN,DATE,BAND IDENT,ETC.
      READ(5,11)ICOM
   11 FORMAT(40A2)
C
C  READ DFT LENGTH, TYPE SCAT, AND AVG RECORD TIME DEL.A
C
C   SET IBUG SWITCH IF DATA DUMP DESIRED ON UNIT 9
      READ(5,12) INCR,ITYPE,DT,IBUG,KPOLZ,IPLOT,CELL
   12 FORMAT(2I5,F5.3,3I5,F5.0)
      GO TO (1,2,3,4), ITYPE
C
C  13.3GHZ SCATTEROMETER
    1 LAMDA=0.02254
      FSAMP=25000.
      FCAL=12000.
      FNOIZ=8000.
      BWID=6.3
      GO TO 13
C  1.6GHZ SCATTEROMETER
    2 LAMDA=0.18737
      FSAMP=5000.
      FCAL=1900.
      FNOIZ=1500.
      BWID=7.94296
      GO TO 13
C  4.75GHZ SCATTEROMETER
    3 LAMDA=0.06311
      FSAMP=10000.
      FCAL=2930.
      FCALV=3380.
      IF(KPOLZ.NE.0) FCAL=FCALV
      FNOIZ=3100.
      BWID=2.5
      GO TO 13
C  0.4GHZ SCATTEROMETER
    4 LAMDA=0.74948
      FSAMP=2500.
      FCAL=1000.
```

ORIGINAL PAGE IS
OF POOR QUALITY

```
      FCPT=500.
      FNOIZ= 200.
      BWID=14.0
C
   13 FPNTS=FLOAT(POINTS)
      THETB=TAN(THETA(B)/57.3)
      ML=100
      ICLR=0
      PT4=1.
      PC4=1.
C  SET UP DEFAULT VALUES FOR CELL LENGTH
      IF(CELL.GT.0.) GO TO 15
      GO TO (101,102,103,104), ITYPE
  101 CELL=25.
      GO TO 15
  102 CELL=50.
      GO TO 15
  103 CELL=40.
      GO TO 15
  104 CELL=75.
   15 CONTINUE
C  TO CORRECT FOR MEASUREMENT OF CALREF
      IF(ITYPE.EQ.2) SYSK=SYSK+3.0103*2.
      VKDB=30.*ALOG10(FORPI)-20.*ALOG10(LAMDA)-SYSK+CABL
C POWER SPECTRUM LENGTH = (LENGTH OF FFT)/2.
      FINCR=FLOAT(INCR)
      INCR2=INCR/2
      DELFRQ=FSAMP/(FINCR)
C
C  INITIALIZE OUTPUT LOAD POINTER & LINE COUNTER
      MXRCTR=ML-10
      NOUT=0
C  NTS IS THE INVERSE OF SPECTRAL LINE WIDTH(LINES/HZ)
      NTS=FINCR/FSAMP
C  CALCULATE POINTERS TO CALIBRATION VALUES IN AFT DATA BUFFER
      MC=IFIX(FCAL*NTS+0.5)+1
      MC4=IFIX(FCPT*NTS+0.5)+1
C   CALCULATE POINTERS FOR NOISE BAND MEASUREMENTS
      IFNOIZ=IFIX(FNOIZ*NTS+0.5)
      NOIZL=IFNOIZ-2
      NOIZR=IFNOIZ+2
      TSTART=3600.*TS(1)+60.*TS(2)+TS(3)
C  CALCULATE NBR OF RCDS TO PROCESS = (TIME INCREMENT)/(RCD LENGTH)
      TSTOP=DELT/DT
      IEND=IFIX(TSTOP+0.5)
      WRITE(6,60) ICOM,POINTS,LAMDA,FSAMP,FCAL,SYSK,CABL,DELT,TS,IEND
   60 FORMAT(1H1,5X,40A2,//,15X,'POINTS/RCD=',I5,5X,'WAVE LENGTH:',F7.4,
     $5X,'SAMPLE FREQ.=',F7.0,5X,'CALIB SIGNAL FREQ=',F6.0,/,
     $15X,'REFER CALIB:',F6.1,' DB',5X,'CABLE LOSS=',F6.1,5X,/,
     $15X,'NBR SEC PROCESSED=',F5.1,5X,'START TIME: ',2F3.0,F4.1,
```

```
     $5X,'NBR RCDS:',I6,/)
      WRITE(6,16)NTS,MC,IFNOIZ
   16 FORMAT(1H ,14X,'SAMPLE INTERVAL:',F9.5,5X,'CALIB PWR PTR:',I6,
     $5X,'NOISE PWR PTR:',I6,//)
   20 CALL INPUT(POINTS,T)
C  *** DIGITIZER CHANNEL 1= SIN, CHANNEL 2= COSINE, IN CORE
C   IF 13.3GHZ TAPE CH11 => SINE, TAPE CH13 => COSINE, (CH11=TSINE,CH13=
C   IF  1.6GHZ TAPE CH 3 => SINE, TAPE CH 1 => COSINE, (CH3=TCOS,CH1=TSI
C   IF  1.6GHZ TAPE CH 7 => SINE, TAPE CH 5 => COSINE(CROSS POLZ)
C  IF 4.75GHZ(LIKE) TAPE CH1=TSINE, CH3=TCOSINE
C  IF 4.75GHZ(CROSS)TAPE CH5=TSINE, CH9=TCOSINE
C
      IF(TSTART.GT.T) GO TO 20
      IF(NOUT.EQ.0) WRITE(6,21) TIME,T,ADAS
   21 FORMAT(1H0,5X,'FIRST RECORD TIME ',2(I2,':'),I3,
     $10X,'TIME IN SECS:',F7.1,/,10X,'ALT:',I4,
     $5X,'VELOCITY:',I4,5X,'PITCH:',I4,5X,'ROLL:',I4,
     $5X,'DRIFT:',I4,/)
      H=ADAS(1)
      H=H*0.3048
      IF(H.LT.350.) H=450.
      VEL=ADAS(2)
      VEL=VEL*0.514
      IF(VEL.LT.60.) VEL=77.1
C  ADAS/NERDAS FORMAT ON TAMU DIGITAL TAPES HAS PITCH FIRST
      PITCH=ADAS(3)
      PITCH=PITCH/573.
      ROLL=ADAS(4)
      ROLL=ROLL/573
      DRIFT=ADAS(5)
      DRIFT=DRIFT/573.
C
C  FILTER THE AIRCRAFT DATA FOR OLD DIGITAL TAPES
C  LIMIT = 5 DEG FOR PITCH, 10 DEG FOR ROLL,AND 15 DEG FOR DRIFT
C
      APITCH=ABS(PITCH)
      AROLL=ABS(ROLL)
      ADRIFT=ABS(DRIFT)
      IF(APITCH.GT.0.08726)  PITCH=0.08726*(PITCH/APITCH)
      IF(AROLL.GT.0.17452)  ROLL=0.17452*(ROLL/AROLL)
      IF(ADRIFT.GT.0.26178)  DRIFT=0.26178 *(DRIFT/ADRIFT)
C
C  CALCULATE NBR OF CELLS IN VIEW
      XCELLS=H*THETB/(VEL*DT)
C
C  INITIALIZE PRINTER POINTER BIAS
      IF(NOUT.EQ.0) LPRNT=IFIX(XCELLS*1.3)
C
C  COMPUTE SIZE OF INSTANTANEOUS RESOLUTION CELL
      SLIP=VEL*FPNTS/FSAMP
```

```
      SCELL=CELL-SLIP
C
C  COMPUTE BUFFER LENGTH NEEDED
      MLN=IFIX(XCELLS+0.5)
      IF(MLN.GT.ML) GO TO 900
C
C  CALCULATE THETA FUNCTION DATA VALUES
      VEL2OL=2.*VEL/LAMDA
      XK=SCELL*VEL2OL/H
      IF(NOUT.EQ.0) WRITE(6,22) H,VEL,PITCH,ROLL,DRIFT,SLIP,XCELLS,
     $SCELL,BWID ,CELL,INCR,ITYPE,VEL2OL
   22 FORMAT(1H ,5X,'RUN PARAMETERS',/,6X,'H: ',F6.1,
     $5X,'VEL:',F6.1,6X,'PITCH:',F6.1,5X,'ROLL:',F6.1,
     $5X,'DRIFT:',F6.1,/,6X,'SLIP:',F6.1,3X,'XCELLS:',F6.1,
     $3X,'SCELL:',F6.1,5X,'BEAMW:',F6.1,2X,'CELL:',F6.1,5X,
     $'INCR:',I5,/,6X,'ITYPE:',I4,5X,'2V/LAMDA:',F9.2,/)
C
      DO 30 I=1,8
C  FOR EACH AFT ANGLE IN THE SET
      ANGL=-THETA(I)/57.3
C
C  GUARD AGAINST DOPPLERS OF NEGATIVE FREQUENCIES OFF FILTER BAND
      AANGL=ABS(ANGL)
      IF(AROLL.GE.AANGL) ANGL=-AROLL
C
C  COMPUTE VIEWING POINT COORDINATES ON THE GROUND
      YPI=-H*TAN(ROLL)
      XPI=SQRT((H*TAN(ANGL))**2-YPI**2)
      TTP=-XPI*COS(ROLL)/H
      XT=-H/COS(ROLL)*TTP
      YT=H*TAN(ROLL)
      XI=XT*COS(DRIFT)+YT*SIN(DRIFT)
      YI=XT*SIN(DRIFT)-YT*COS(DRIFT)
C  FORCE THE DOPPLER BAND TO BE ON FILTER BANK
      IF(XI.LT.SCELL/2.) XI=SCELL/2.
C
C  COMPUTE CORRECTED DOPPLER ANGLES
      XN=XI**2
      XD=H**2+YI**2
      ANGLD=ATAN(SQRT(XN/XD))
C
C  COMPUTE DOPPLER CENTER FREQUENCY ==============
      FDOP(I)=VEL2OL*SIN(ANGLD)
      IF(ITYPE.EQ.4) FDOP(I)=500.-FDOP(I)
C
C   COMPUTE DOPPLER BANDWIDTH == == == ==
      DFDOP(I)=XK*COS(ANGLD)**3
C
C
C  COMPUTE NBR OF FILTER ELEMENTS NEEDED
```

```
      NFI=IFIX(DFDOP(I)*NTS+0.5)
      IF(NFI.LT.1) NFI=1
C
C  CALCULATE TRUE BANDWIDTH
      DFDOP(I)=FLOAT(NFI)*DELFRQ
      IF(MOD(NFI,2).EQ.0) GO TO 25
C  ODD NBR OF FILTERS REQUIRED
C
C  CENTER FREQ INDEX IS:
      NC=IFIX(FDOP(I)*NTS+0.5)
C
C  TRUE DOPPLER CENTER FREQ
      FDOP(I)=NC*DELFRQ
C
C  LEFT INDEX POINTER
      IFDL(I)=NC-(NFI-1)/2
C
C  RIGHT INDEX POINTER
      GO TO 27
C
   25 CONTINUE
C  EVEN NBR OF FILTERS REQUIRED
C
C  CENTER FREQ INDEX
      NC=IFIX(FDOP(I)*NTS)
C
C  TRUE DOPPLER CENTER FREQ
      FDOP(I)=(FLOAT(NC)+0.5)*DELFRQ
C
C  LEFT INDEX POINTER
      IFDL(I)=NC+1-NFI/2
   27 CONTINUE
      IF(IFDL(I).LE.0) IFDL(I)=1
C  RIGHT INDEX POINTER
      IFDR(I)=IFDL(I)+NFI-1
      IF(ITYPE.EQ.4) FDOP(I)=500.-FDOP(I)
C
C  COMPUTE TRUE DOPPLER ANGLE AND VIEWING ANGLE
      ANGTD=ARSIN(FDOP(I)/VEL2CL)
      XTSQ=XD*TAN(ANGTD)**2
      YTSQ=YI**2
      ANGTL=ATAN(SQRT(XTSQ+YTSQ)/H)
C  CHECK FOR NEGATIVE DOPPLERS
      AROLL=ABS(ROLL)
      IF(ANGTL.LT.AROLL) ANGTL=AROLL
C   SET UP FOR AFT VIEWING ANGLES ONLY
      ANGT(I)=ANGTL*57.3
C  COMPUTE TRUE RANGE
      R(I)=H/COS(ANGTL)
C
```

```
C  CALCULATE AREA VARIABLES KONE & KTWO
      ICON=1
      KONE=4./(LAMDA*(FDOP(I)-DFDOP(I)/2.))**2
C  CHECK FOR  ZERO & NEGATIVE DOPPLERS
      IF((DFDOP(I)/2.).GE.FDOP(I)) ICON=-1
      KTWO=4./(LAMDA*(FDOP(I)+DFDOP(I)/2.))**2
C
C  **>  THIS SYSTEM FOR AFT ANGLES ONLY  <<<<<******
C
C  COMPUTE CORRECTED VIEWING ANGLE THRU ANTENNA PATTERN COORD SYSTEM
      ANGLPI=ATAN(-COS( ROLL)*SQRT(TAN(ANGTL)**2-TAN(ROLL)**2))
C
C** FIND VALUE IN TABLES OF GAINSQ
      GAINSQ(I)=GAIN(ANGLPI,PITCH)
C
C  FIND VALUE OF WATER FILTER ROLL-OFF
      ZW(I)=GAMMA(FDOP(I))
C
C  CALCULATE CELL AREA BETWEEN ISODOP LINES USING TRUE LOOK ANGLE
      BEAM(I)=BWID/57.3
      CALL CAREA(A(I),BEAM(I),H,ANGTL,VEL,ROLL,DRIFT,ICON )
   30 CONTINUE
C
C  SET UP TO DO THE FFT WITH 'INCR' POINTS
      NU=IFIX(ALOG(FINCR    )/ALOG(2.)+0.5)
C
C  CONVERT DATA TO FLOATING POINT & PLACE IN FFT BUFFER
      GO TO (31,32,31,32), ITYPE
   32 CALL SCALX(POINTS,SINE,COSINE,FRS)
      IF(ITYPE.EQ.4) CALL SCALX(POINTS,COSINE,SINE,FRC)
      GO TO 331
C
C  IF 13.3GHZ OR 4.75 DATA (TAMU INPUT TAPES) PUT CHAN2 DIG DATA FIRST
   31 CALL SCALX(POINTS,COSINE,SINE,FRS)
  331 CONTINUE
      IL=POINTS/INCR
      DO 35 I=1,IL
      IS=(I-1)*INCR+1
C
C  BUILD SPECTRUM FOR (CH1)+J(CH2)
      CALL DFT(FRS(IS),NU,INCR)
C  BUILD CALIB CHANNEL SPEC FOR 0.4GHZ DATA
      IF(ITYPE.EQ.4) CALL DFT(FRC(IS),NU,INCR)
   35 CONTINUE
C
C  SUM THE IL SETS FOR AFT DATA
      DO 36 I=1,INCR2
      FREQP(I)=FLOAT(I-1)*DFLFRQ
      AFT(I)=0.0
      AFTC(I)=0.0
```

```
C
C  BUILD AFT DATA POWER BUFFER OF 'INCR/2' SPECTRAL LINES
      DO 37 K=1,IL
      IS=(K-1)*INCR+I
      AFT(I)=AFT(I)+CABS(FRS(IS))
      IF(ITYPE.NE.4) GO TO 37
      AFTC(I)=AFTC(I)+CABS(FRC(IS))
   37 CONTINUE
   36 CONTINUE
      IF(NOUT.GT.0) GO TO 34
C
C  CHECK PLOT FLAG, BYPASS IF ZERO
      IF(IPLOT.EQ.0) GO TO 34
      WRITE(6,33)ICOM
   33 FORMAT(1H1,//,5X,'AFT DATA SPECTRUM FOR RECORD NBR 1',5X,40A2,/)
      CALL PLOT(FREQP,AFT,INCR2)
      IF(ITYPE.NE.4) GO TO 34
      WRITE(6,133) ICOM
  133 FORMAT(1H1,//,5X,'AFT DATA SPECTRUM FOR 0.4GHZ CH2, RCD 1',
     $5X,40A2,/)
      CALL PLOT(FREQP,AFTC,INCR2)
   34 CONTINUE
C
C  GET VALUES OF NOISE POWER & CALIBRATION POWER LEVELS
      CALL PWR(NOIZL,NOIZR,AFT,FNOIZ)
      FNOIZ=FNOIZ/5
C  SUM CALIBRATION POWER
      LPP=MC-6
      LRP=MC+6
      CALL PWR(LPP,LRP,AFT,PSUBT)
      IF(ITYPE.NE.4) GO TO 39
C  SUM CALIB CHANNEL POWER FOR 0.4GHZ CH2(AT 1 KHZ)
      CALL PWR(LPP,LRP,AFTC,PC4)
      LPP4=MC4-6
      LRP4=MC4+6
C  SUM TRANSMIT POWER FOR 0.4GHZ CH2(AT 0.5 KHZ)
      CALL PWR(LPP4,LRP4,AFTC,PT4)
C
   39 CONTINUE
C
      IF(NOUT.GT.0) GO TO 38
      WRITE(6,138)FNOIZ,PSUBT,PC4,PT4
  138 FORMAT(1H ,'FNOIZ:',F9.5,5X,'PSUBT:',F9.5,
     $5X,'PCAL-4:',F9.5,5X,'PT-4:',F9.5)
   38 CONTINUE
C
C  BUILD SIGMA-ZERO SET
      DO 40 I=1,8
C
C  FIND VALUE OF RECEIVED POWER
```

```
      CALL PWR(IFDL(I),IFDR(I),AFT,PSUBR)
C
C  SAVE DEBUG DUMP VALUES
      PSPEC(I)=PSUBR
      PROPT(I)=10.*ALOG10((PSUBR/PSUBT)*(PC4/PT4))
C
C  COMPUTE FINAL SIGMA-ZERO ESTIMATES
      SIGMA(I)=VKDB-GAINSQ(I)+40.*ALOG10(R(I))-10.*ALOG10(A(I))+
     $PROPT(I)-ZW(I)
   40 CONTINUE
      IF(IBUG.EQ.0) GO TO 42
C
C  DUMP DEBUG VALUES TO PRINT SET NBR 2
      WRITE(9,41)TIME,PSUBT,PC4,PT4,PSPEC,R,A,BEAM,ANGT,PROPT,
     $FDOP,DFDOP
   41 FORMAT(1H ,2(I2,':'),I3,4X,'CAL PWR=',F8.2,
     $9X,'PCAL-4=',F8.2,11X,'PT-4=',F8.2,/,
     $5X,'FILT PWR:',8(F8.2),/,
     $5X,'R(I):',4X,8(F8.2),/,
     $5X,'A(I):',4X,8(F8.2),/,
     $5X,'BEAM(I):',1X,8(F8.2),/,
     $5X,'ANGTL(I):',8(F8.2),/,
     $5X,'PR/PT(I):',8(F8.2),/,
     $5X,'FD(I):',7X,8(F8.2),/,
     $5X,'BND(I):',2X,8(F8.2))
      WRITE(9,141) GAINSQ,ZW,SIGMA
  141 FORMAT(1H ,4X,'GRGT(I):',1X,8(F8.2),/,
     $5X,'ROFF(I):',1X,8(F8.2),/,
     $5X,'SIGMA(I):',8(F8.2))
   42 CONTINUE
C
C  BUILD POINTER SET FOR FILLING OUTPUT BUFFER
      K=MOD(MXRCTR,ML)+1
      DO 45 J=1,3
      MATRIX(J,K)=TIME(J)
   45 CONTINUE
C
C  PUT A/C DATA VALUES INTO OUTPUT BUFFER
      MATRIX(4,K)=IFIX(H*10.)
      MATRIX(5,K)=IFIX(VFL*10.)
      MATRIX(6,K)=ADAS(3)
      MATRIX(7,K)=ADAS(4)
      MATRIX(8,K)=ADAS(5)
      MATRIX(9,K)=IFIX(100.*ALOG10(PSUBT))
      MATRIX(10,K)=IFIX(100.*ALOG10(FNOIZ))
C  POSITION THE 8 SIGMA VALUES IN THE OUTPUT BUFFER
      DO 50 I=1,8
      IBPTR(I)=IFIX(TAN( ANGT(I)/57.3)/THETB*XCELLS+0.5)
      IBK=MXRCTR-IBPTR(I)
      IF(IBK.LT.0) IBK=0
```



ORIGINAL PAGE IS
OF POOR QUALITY

```
      IBK=MOD(IBK,ML)+1
      MATRIX(10+I,IBK)=IFIX(SIGMA(I)*10.)
   50 CONTINUE
      NOUT=NOUT+1
   52 MOUT=MXRCTR-LPRNT
C  TAKE CARE OF MXRCTR COUNTER OVER-FLOW
      IF(MOUT.LT.0) MOUT=MOUT+ML
      MOUT=MOD(MOUT,ML)+1
      IF(NOUT.GT.1 ) GO TO 70
C
C  DISPLAY FIRST RECORD INFORMATION
      WRITE(6,61)THETA,FDOP,DFDOP,R,A,IBPTR
   61 FORMAT(1H0,'RCD #1 PARAMETERS',/,10X,'ANGLES(DEG):  ',8(5X,F6.1),
     $/,10X,'DOPPLER FREQS:',8(5X,F6.1),
     $/,10X, 'BANDWIDTHS:    ',8(5X,F6.1),/
     $10X,'RANGES:    ',4X,8(5X,F6.1),/,
     $10X,'AREAS :    ',4X,8(5X,F6.1),/,
     $10X,'POINTER VALS:',8(5X,I6)/)
      WRITE(6,62) ITHETA
   62 FORMAT(3X,'TIME ',6X,'ALT  ',1X,'VEL  ',2X,'PITCH',3X,'ROLL ',3X,
     $'DRIFT',3X,'PT'    ,3X,'PNOIZ',3X,'SIGMA(I),I=1,8',/,
     $62X,8(I2,'DEG',2X),//)
C
C  FORMAT THE OUTPUT FOR PRINTER SET NBR 1
   70 DO 65 I=3,18
      TRIX(I-2)=FLOAT(MATRIX(I,MOUT))/10.
   65 CONTINUE
C
C  OUTPUT THE PRINTED DATA SET NBR 1
      WRITE(6,80)(MATRIX(K,MOUT),K=1,2),(TRIX(I),I=1,16)
   80 FORMAT(1X,2(I2,':'),F4.1,1X,15(F6.1,1X))
C
C  OUTPUT THE PUNCHED DATA SET NBR 1
      WRITE(7,81)(MATRIX(K,MOUT),K=1,18)
   81 FORMAT(2I2,I3,2I5,3I4,10I5)
C
C  BACK-FILL THE BUFFER LINES THAT HAVE BEEN OUTPUT
      DO 90 J=1,18
      MATRIX(J,MOUT)=-999
   90 CONTINUE
      MXRCTR=MXRCTR+1
C  TAKE CARE OF REGISTER OVER-FLOW
      IF(MXRCTR.EQ.0) MXRCTR=K+1
      IF(NOUT.GE.IEND) GO TO 777
      GO TO 20
  777 CONTINUE
C  PURGE THE BUFFER BEFORE STOPPING
      ICLR=ICLR+1
      IF(ICLR.GT.LPRNT) GO TO 778
      K=MOD(MXRCTR,ML)+1
```

```
      GO TO 52
  778 WRITE(6,700) NOUT,TIME
  700 FORMAT(1H0,5X,'NBR OF RECORDS PROCESSED = ',I5,5X,
     $'LAST RECORD TIME = ',2(I2,':'),I3)
      STOP
  800 WRITE(6,801) MLN,ML
  801 FORMAT(1H ,'***> MATRIX BUFFER OVERFLOW <***',I6,
     $' LINES NEEDED,',I6,' LINES AVAILABLE',/)
      GO TO 777
      END
      SUBROUTINE PWR(IL,IR,AFT,PSD)
C  THIS ROUTINE USES LEFT & RIGHT POINTERS TO CALCULATE
C   THE MEAN VALUE OF POWER IN THE FREQ CELL SPECIFIED
C
      DIMENSION AFT(1024)
      TEMP=0.
      DO 10 I=IL,IR
      TEMP=TEMP+AFT(I)**2
   10 CONTINUE
      PSD=TEMP
      RETURN
      END
      SUBROUTINE INPUT(POINTS,T)
      INTEGER POINTS
      INTEGER*2 TIME(3),ADAS(5),SINE(  2048),COSINE(  2048)
      COMMON/ITAPE/TIME,ADAS,SINE,COSINE
      IPTS=POINTS/1024
      GO TO (10,20),IPTS
   10 READ(8,15,END=70) TIME,ADAS,(SINE(J),J=1,POINTS),
     $(COSINE(K),K=1,POINTS)
   15 FORMAT(8A2,16(64A2),16(64A2))
      GO TO 30
   20 READ(8,25,END=70) TIME,ADAS,(SINE(J),J=1,POINTS),
     $(COSINE(K),K=1,POINTS)
   25 FORMAT(8A2,32(64A2),32(64A2))
   30 HT=TIME(1)
      MT=TIME(2)
      ST=TIME(3)
      T=3600.*HT+60.*MT+ST/10.
      RETURN
   70 WRITE(6,75)
   75 FORMAT(1H ,10X,'END OF FILE ON TAPE UNIT *****',/)
      STOP
      END
      SUBROUTINE SCALX(POINTS,SINE,COSINE,FRS)
      INTEGER POINTS
      INTEGER*2 SINE(POINTS),COSINE(POINTS)
      COMPLEX FRS(POINTS),CMPLX
      COMMON/RAT/FINCR,FCAL,FSAMP,INCR
      COMMON/FILT/ITYPE,KPOLZ
```

ORIGINAL PAGE IS
OF POOR QUALITY

```
C  BYPASS AVERAGING WHEN 0.4GHZ DATA
      GO TO (4,4,4,6), ITYPE
    4 CONTINUE
C  AVERAGE OUT THE DC COMPONENT
      SUMC=0.
      SUMS=0.
      DO 5 M=1,POINTS
      ISIN=SINE(M)
      ICOS=COSINE(M)
      SUMS=SUMS+FLOAT(ISIN)
      SUMC=SUMC+FLOAT(ICOS)
    5 CONTINUE
      ISAVG=IFIX(SUMS/FLOAT(POINTS))
      ICAVG=IFIX(SUMC/FLOAT(POINTS))
    6 CONTINUE
C  BUILD (X+JY) BUFFER FOR DFT
      DO 10 K=1,POINTS
      ISIN=SINE(K)
      ICOS=COSINE(K)
C  ZERO CH2 WHEN 0.4GHZ DATA
      GO TO (8,8,8,7), ITYPE
    7 ICOS=0
      ISAVG=0
      ICAVG=0
    8 CONTINUE
      ISIN=ISIN-ISAVG
      ICOS=ICOS-ICAVG
      FRS(K)=CMPLX(FLOAT(ISIN/16)/2048.,FLOAT(ICOS/16)/2048.)
   10 CONTINUE
      RETURN
      END
      FUNCTION GAMMA(FREQ)
C  WATER ROLLOFF FILTER FOR CALCULATING ZW(I)
C     FREQ EXPECTED IN HZ
      COMMON/FILT/ITYPE,KPOLZ
      F=FREQ/1000.
      GO TO (10,20,30,40), ITYPE
C  THIS FUNCTION IS FOR 13.3GHZ
C  >>  DATA TAKEN AFTER 1JAN78  <<<
   10 GAMMA=15.8532-F*(7.76831-F*(1.5464-F*(.109227-.000945247*F)))+
     $(4.62135-.172139/F)/F
   15 GAMMA = -GAMMA
   16 RETURN
C
C  THIS FUNCTION IS FOR 1.6 GHZ
   20 GAMMA=7.710938-F*(21.69141-14.94141*F)+(1.111816-0.0186787/F)/F
      GO TO 15
C
C  THIS FUNCTION IS FOR 4.75GHZ
   30 GAMMA=18.5575-F*(16.5981-F*(8.64097-F*(3.44443-0.653213*F)))-
```



C-8

```
     $(0.25549/F)
      GO TO 15
C
C  THIS FUNCTION IS FOR 0.4GHZ
   40 GAMMA=0.0
      GO TO 16
      END
      SUBROUTINE PLOT(X,Y,N)
      INTEGER Q
      INTEGER QA,QB,QC
C     INTEGER X,Y
C 30  FORMAT(' ',I8,5X,I8,5X,1X,103A1)
  30  FORMAT(' ',2E13.5,1X,103A1)
      DIMENSION Q(100),X(N),Y(N)
      DATA QA,QB,QC/2HII,2H++,2H--/
      DO 1 I=1,100
      Q(I)=QC
    1 CONTINUE
      YMAX=Y(1)
      YMIN=Y(1)
      DO 3 I=2,N
      IF(YMAX.LT.Y(I)) YMAX=Y(I)
      IF(YMIN.GT.Y(I)) YMIN=Y(I)
    3 CONTINUE
      SCALE=YMAX-YMIN
      IF(SCALE.EQ.0) GO TO 16
      DO 2 I=1,N
      NUM=((Y(I)-YMIN)*99.0)/SCALE+1
    2 WRITE (6,30) X(I),Y(I),QA,(Q(II),II=1,NUM),QB
      RETURN
   16 WRITE (6,33) YMAX
   33 FORMAT (' DEPENDENT VARIABLE IS CONSTANT ',D13.5 )
      RETURN
      END
      SUBROUTINE DFT(X,M,INCR)
C     A FAST FOURIER TRANSFORM THAT IMPLEMENTS THE
C             "DECIMATION-IN-FREQUENCY" ALGORITHM
C
C        CALLING PARAMTERS:
C        X = COMPLEX ARRAY OF DIMENSION N THAT CONTAINS INITIALLY
C             THE INPUT SEQUENCE X(N) AND FINALLY CONTAINS THE
C             TRANSFORM X(K).  THE QUANTITY M IS AN INTEGER. M=LOG2(N).
C             WHERE N IS THE NUMBER OF TIME VARYING DATA POINTS
C            INCR = SIZE OF THE ARRAY HOLDING THE TIME FUNCTION
C
      COMPLEX X(INCR),U,W,T,CMPLX
      N=2**M
      NV2=N/2
      NM1=N-1
      J=1
```

```
      DO 7 I=1,NM1
      IF(I.GE.J) GO TO 5
      T=X(J)
      X(J)=X(I)
      X(I)=T
    5 K=NV2
    6 IF(K.GE.J) GO TO 7
      J=J-K
      K=K/2
      GO TO 6
    7 J=J+K
   15 PI=3.1459265
      DO 20 L=1,M
      LE=2**L
      LE1=LE/2
      U=CMPLX(1.0,0.0)
      W=CMPLX(COS(PI/FLOAT(LE1)),-SIN(PI/FLOAT(LE1)))
      DO 20 J=1,LE1
      DO 10 I=J,N,LE
      IP=I+LE1
      T=X(IP)*U
      X(IP)=X(I)-T
   10 X(I)=X(I)+T
   20 U=U*W
      RETURN
      END
      SUBROUTINE CAREA(AREA,BEAM,HEIGT,ANGLO,VELOC,ROLL,DRIFT,ICON)
      REAL KONE,KTWO
      COMMON/KAREA/KONE,KTWO
      TERM1=2.*TAN(BEAM/2.)*HEIGT**2/COS(ROLL)/COS(ANGLO)
      TEMP1=KTWO*VELOC**2
      ATD=TAN(DRIFT)
      TNR=TAN(ROLL)
      CDR=COS(DRIFT)
      TEMP1=(-ATD*TNR+SQRT(TNR**2*(TEMP1-1.0)+
     $TEMP1*CDR**2-1.0))/(1.0-TEMP1*CDR**2)
      TERM2=TEMP1
      TEMP1=KONE*VELOC**2
      TEMP1=(-ATD*TNR+SQRT(TNR**2*(TEMP1-1.0)+
     $TEMP1*CDR**2-1.0))/(1.0-TEMP1*CDR**2)
      IF(ICON.LT.0) TEMP1=0.
      AREA=TERM1*(TERM2-TEMP1)
      AREA=ABS(AREA)
      RETURN
      END
```

```
C  GAIN SUB-PROGRAM FOR 13.3GHZ VV DATA
      REAL FUNCTION GAIN(ANTANG,PITCH)
      REAL ANTNNA,ANGLE
      REAL ANTANG,PITCH
      DIMENSION ANTNNA(71)
C
C     GAIN VALUES FOR 13.3 KHC ANTENNA, VERTICAL POLARIZATION
C          >>>>  TABLE UP-DATED 16JAN1979  ...<<<
C
      DATA ANTNNA(001),ANTNNA(002),ANTNNA(003),ANTNNA(004),ANTNNA(005),
     *     ANTNNA(006),ANTNNA(007),ANTNNA(008),ANTNNA(009),ANTNNA(010)
     */17.00,17.00,18.30,19.50,21.00,
     * 22.50,23.80,24.70,26.00,27.50/
      DATA ANTNNA(011),ANTNNA(012),ANTNNA(013),ANTNNA(014),ANTNNA(015),
     *     ANTNNA(016),ANTNNA(017),ANTNNA(018),ANTNNA(019),ANTNNA(020)
     */28.80,30.00,30.50,30.70,31.00,
     * 31.00,31.50,32.00,33.00,34.00/
      DATA ANTNNA(021),ANTNNA(022),ANTNNA(023),ANTNNA(024),ANTNNA(025),
     *     ANTNNA(026),ANTNNA(027),ANTNNA(028),ANTNNA(029),ANTNNA(030)
     */34.40,34.80,35.30,35.50,35.50,
     * 35.50,35.30,35.00,34.00,33.20/
      DATA ANTNNA(031),ANTNNA(032),ANTNNA(033),ANTNNA(034),ANTNNA(035),
     *     ANTNNA(036),ANTNNA(037),ANTNNA(038),ANTNNA(039),ANTNNA(040)
     */33.00,33.50,34.00,34.50,35.00,
     * 35.50,35.00,34.50,34.00,33.50/
      DATA ANTNNA(041),ANTNNA(042),ANTNNA(043),ANTNNA(044),ANTNNA(045),
     *     ANTNNA(046),ANTNNA(047),ANTNNA(048),ANTNNA(049),ANTNNA(050)
     */33.00,33.20,34.00,35.00,35.30,
     * 35.50,35.50,35.50,35.30,34.80/
      DATA ANTNNA(051),ANTNNA(052),ANTNNA(053),ANTNNA(054),ANTNNA(055),
     *     ANTNNA(056),ANTNNA(057),ANTNNA(058),ANTNNA(059),ANTNNA(060)
     */34.40,34.00,33.00,32.00,31.50,
     * 31.00,31.00,30.70,30.50,30.00/
      DATA ANTNNA(061),ANTNNA(062),ANTNNA(063),ANTNNA(064),ANTNNA(065),
     *     ANTNNA(066),ANTNNA(067),ANTNNA(068),ANTNNA(069),ANTNNA(070)
     */28.80,27.50,26.00,24.70,23.80,
     * 22.50,21.00,19.50,18.30,17.00/
      DATA ANTNNA(071)/17.00/
C     ANGLE IS THE DIFFERENCE OF THE ANTENNA ANGLE AND PITCH
C     ANTANG IS THE ANTENNA ANGLE WITH RESPECT TO THE AIRCRAFT
C     PITCH IS THE AIRCRAFT PITCH ANGLE
C     ALL ANGLES ARE EXPECTED TO BE EXPRESSED IN RADIANS
C
C     THE RANGE OF VALUES OF ANGLE IS:   -70.9 TO 70.9 DEGREES.
C     IF AN ANGLE FALLS OUT OF THIS RANGE, THE CLOSEST ANGLE
C     VALUE WILL BE RETURNED
C
      ANGLE=ANTANG-PITCH
      INDEX=IFIX((ANGLE*57.3+70.)/2.)+1
      IF(INDEX.LE.0) GO TO 30
```

```
      IF(INDEX.GE.71) GO TO 10
      ANGLZ=FLOAT(INDEX-1)*2.-70.
      GAIN=ANTNNA(INDEX)+(ANTNNA(INDEX+1)-ANTNNA(INDEX))*
     $((ANGLE*57.3-ANGLZ)/2.0)
      RETURN
   10 GAIN=ANTNNA(71)
      RETURN
   30 GAIN=ANTNNA(1)
      RETURN
      END



      REAL FUNCTION GAIN(ANTANG,PITCH)
      REAL ANTNNA,ANGLE,ANTANG,PITCH
      DIMENSION ANTNNA(71)
C
C     GAIN VALUES FOR 1.6 KHC ANTENNA,VERTICAL POLARIZATION
C
      DATA ANTNNA(001),ANTNNA(002),ANTNNA(003),ANTNNA(004),ANTNNA(005),
     *     ANTNNA(006),ANTNNA(007),ANTNNA(008),ANTNNA(009),ANTNNA(010)/
     *   14.70,     15.40,     15.70,     16.40,     17.40,
     *   17.90,     18.70,     19.40,     19.90,     20.60/
      DATA ANTNNA(011),ANTNNA(012),ANTNNA(013),ANTNNA(014),ANTNNA(015),
     *     ANTNNA(016),ANTNNA(017),ANTNNA(018),ANTNNA(019),ANTNNA(020)/
     *   21.60,     21.90,     21.90,     22.40,     22.70,
     *   22.90,     22.60,     22.90,     22.40,     22.20/
      DATA ANTNNA(021),ANTNNA(022),ANTNNA(023),ANTNNA(024),ANTNNA(025),
     *     ANTNNA(026),ANTNNA(027),ANTNNA(028),ANTNNA(029),ANTNNA(030)/
     *   21.90,     21.40,     21.40,     21.10,     20.90,
     *   20.70,     20.40,     20.40,     20.10,     20.70/
      DATA ANTNNA(031),ANTNNA(032),ANTNNA(033),ANTNNA(034),ANTNNA(035),
     *     ANTNNA(036),ANTNNA(037),ANTNNA(038),ANTNNA(039),ANTNNA(040)/
     *   20.70,     21.40,     21.40,     21.70,     22.10,
     *   22.20,     22.20,     22.10,     21.90,     21.40/
      DATA ANTNNA(041),ANTNNA(042),ANTNNA(043),ANTNNA(044),ANTNNA(045),
     *     ANTNNA(046),ANTNNA(047),ANTNNA(048),ANTNNA(049),ANTNNA(050)/
     *   21.20,     20.90,     20.70,     20.10,     19.70,
     *   19.20,     18.70,     18.10,     17.60,     17.60/
      DATA ANTNNA(051),ANTNNA(052),ANTNNA(053),ANTNNA(054),ANTNNA(055),
     *     ANTNNA(056),ANTNNA(057),ANTNNA(058),ANTNNA(059),ANTNNA(060)/
     *   17.40,     17.10,     17.20,     17.10,     16.90,
     *   16.90,     16.90,     16.70,     16.40,     15.90/
      DATA ANTNNA(061),ANTNNA(062),ANTNNA(063),ANTNNA(064),ANTNNA(065),
     *     ANTNNA(066),ANTNNA(067),ANTNNA(068),ANTNNA(069),ANTNNA(070)/
     *   15.40,     14.90,     14.70,     14.20,     13.90,
     *   13.20,     12.70,     11.40,     10.40,      9.40/
      DATA ANTNNA(71)/8.90/
```



ORIGINAL PAGE IS
OF POOR QUALITY

```
C
C     THIS SUBROUTINE RETURNS A GAIN VALUE FOR AN ANGLE
C
C     ANGLE IS THE DIFFERENCE OF THE ANTENNA ANGLE AND THE PITCH
C     ANTANG IS THE ANTENNA ANGLE WITH RESPECT TO THE AIRCRAFT
C     PITCH IS THE AIRCRAFT PITCH ANGLE
C     ALL ANGLES ARE EXPECTED TO BE EXPRESSED IN RADIANS
C
C     THE RANGE OF VALUES FOR ANGLE IS:  -70.9 TO 70.9 DEGREES
C     IF AN ANGLE FALLS OUT OF THIS RANGE, THE CLOSEST GAIN
C     VALUE WILL BE RETURNED
C
      ANGLE = ANTANG-PITCH
      INDEX=IFIX((ANGLE*57.3+70.)/2.)+1
      IF(INDEX.LE.0) GO TO 30
      IF(INDEX.GE.71) GO TO 10
      ANGLZ=FLOAT(INDEX-1)*2.-70.
      GAIN=ANTNNA(INDEX)+(ANTNNA(INDEX+1)-ANTNNA(INDEX))*ABS
     $((ANGLE*57.3-ANGLZ)/2.0)
      RETURN
   10 GAIN=ANTNNA(71)
      RETURN
   30 GAIN=ANTNNA(1)
      RETURN
      END


      REAL FUNCTION GAIN(ANTANG,PITCH)
      REAL ANTNNA,ANGLE,ANTANG,PITCH
      DIMENSION ANTNNA(71)
C
C     GAIN VALUES FOR 1.60 KMC ANTENNA, CROSS POLARIZATION (V-H)
C
      DATA ANTNNA(001),ANTNNA(002),ANTNNA(003),ANTNNA(004),ANTNNA(005),
     *     ANTNNA(006),ANTNNA(007),ANTNNA(008),ANTNNA(009),ANTNNA(010)/
     *   21.40,     22.20,     22.70,     23.20,     23.90,
     *   24.10,     24.60,     24.90,     25.10,     25.90/
      DATA ANTNNA(011),ANTNNA(012),ANTNNA(013),ANTNNA(014),ANTNNA(015),
     *     ANTNNA(016),ANTNNA(017),ANTNNA(018),ANTNNA(019),ANTNNA(020)/
     *   26.10,     26.20,     26.20,     26.40,     26.20,
     *   26.20,     25.60,     25.60,     24.60,     24.20/
      DATA ANTNNA(021),ANTNNA(022),ANTNNA(023),ANTNNA(024),ANTNNA(025),
     *     ANTNNA(026),ANTNNA(027),ANTNNA(028),ANTNNA(029),ANTNNA(030)/
     *   23.60,     22.90,     22.20,     21.60,     20.90,
     *   20.10,     20.10,     19.70,     19.40,     19.70/
      DATA ANTNNA(031),ANTNNA(032),ANTNNA(033),ANTNNA(034),ANTNNA(035),
     *     ANTNNA(036),ANTNNA(037),ANTNNA(038),ANTNNA(039),ANTNNA(040)/
     *   19.90,     20.10,     20.90,     20.90,     21.40,
     *   21.70,     22.20,     22.20,     22.20,     21.90/
      DATA ANTNNA(041),ANTNNA(042),ANTNNA(043),ANTNNA(044),ANTNNA(045),
```

```
     *      ANTNNA(046),ANTNNA(047),ANTNNA(048),ANTNNA(049),ANTNNA(050)/
     *   21.40,     20.90,     20.70,     20.10,     19.70,
     *   19.70,     20.20,     20.40,     20.70,     20.90/
      DATA ANTNNA(051),ANTNNA(052),ANTNNA(053),ANTNNA(054),ANTNNA(055),
     *      ANTNNA(056),ANTNNA(057),ANTNNA(058),ANTNNA(059),ANTNNA(060)/
     *   21.20,     21.40,     21.40,     21.40,     21.20,
     *   2( 60,     20.90,     20.40,     19.90,     19.10/
      DATA ANTNNA(061),ANTNNA(062),ANTNNA(063),ANTNNA(064),ANTNNA(065),
     *      ANTNNA(066),ANTNNA(067),ANTNNA(068),ANTNNA(069),ANTNNA(070)/
     *   18.40,     18.10,     17.70,     17.40,     17.90,
     *   17.60,     17.90,     17.40,     16.60,     16.10/
      DATA ANTNNA(71)/15.60/
C
C     THIS SUBROUTINE RETURNS A GAIN VALUE FOR AN ANGLE
C
C     ANGLE IS THE DIFFERENCE OF THE ANTENNA ANGLE AND THE PITCH
C     ANTANG IS THE ANTENNA ANGLE WITH RESPECT TO THE AIRCRAFT
C     PITCH IS THE AIRCRAFT PITCH ANGLE
C     ALL ANGLES ARE EXPECTED TO BE EXPRESSED IN RADIANS
C
C     THE RANGE OF VALUES FOR ANGLE IS:  -70.9 TO 70.9 DEGREES
C     IF AN ANGLE FALLS OUT OF THIS RANGE, THE CLOSEST GAIN
C     VALUE WILL BE RETURNED
C
      ANGLE = ANTANG-PITCH
      INDEX=IFIX((ANGLE*57.3+70.)/2.)+1
      IF(INDEX.LE.0) GO TO 30
      IF(INDEX.GE.71) GO TO 10
      ANGLZ=FLOAT(INDEX-1)*2.-70.
      GAIN=ANTNNA(INDEX)+(ANTNNA(INDEX+1)-ANTNNA(INDEX))*ABS
     $((ANGLE*57.3-ANGLZ)/2.0)
      RETURN
   10 GAIN=ANTNNA(71)
      RETURN
   30 GAIN=ANTNNA(1)
      RETURN
      END


C  **  ANTENNA GAIN FUNCTION FOR 1.6GHZ HH DATA
      REAL FUNCTION GAIN(ANTANG,PITCH)
      REAL ANTNNA,ANGLE,ANTANG,PITCH
      DIMENSION ANTNNA(71)
C
C     GAIN VALUES FOR 1.6 KHC ANTENNA,HORIZONTAL POLARIZATION
C
      DATA ANTNNA(001),ANTNNA(002),ANTNNA(003),ANTNNA(004),ANTNNA(005),
     *      ANTNNA(006),ANTNNA(007),ANTNNA(008),ANTNNA(009),ANTNNA(010)/
     *   23.10,     23.70,     24.20,     24.40,     24.40,
```

```
     *   24.40,     24.60,     24.60,     24.60,     24.90/
      DATA ANTNNA(011),ANTNNA(012),ANTNNA(013),ANTNNA(014),ANTNNA(015),
     *     ANTNNA(016),ANTNNA(017),ANTNNA(018),ANTNNA(019),ANTNNA(020)/
     *   24.60,     24.40,     24.40,     24.40,     23.90,
     *   23.70,     23.10,     22.90,     22.40,     21.90/
      DATA ANTNNA(021),ANTNNA(022),ANTNNA(023),ANTNNA(024),ANTNNA(025),
     *     ANTNNA(026),ANTNNA(027),ANTNNA(028),ANTNNA(029),ANTNNA(030)/
     *   21.40,     20.90,     20.40,     19.90,     19.10,
     *   18.90,     18.60,     18.40,     18.40,     18.40/
      DATA ANTNNA(031),ANTNNA(032),ANTNNA(033),ANTNNA(034),ANTNNA(035),
     *     ANTNNA(036),ANTNNA(037),ANTNNA(038),ANTNNA(039),ANTNNA(040)/
     *   18.90,     18.90,     19.70,     19.70,     19.70,
     *   19.70,     19.70,     18.90,     18.70,     18.10/
      DATA ANTNNA(041),ANTNNA(042),ANTNNA(043),ANTNNA(044),ANTNNA(045),
     *     ANTNNA(046),ANTNNA(047),ANTNNA(048),ANTNNA(049),ANTNNA(050)/
     *   17.60,     17.70,     17.90,     18.40,     18.20,
     *   17.90,     17.90,     18.10,     19.40,     19.90/
      DATA ANTNNA(051),ANTNNA(052),ANTNNA(053),ANTNNA(054),ANTNNA(055),
     *     ANTNNA(056),ANTNNA(057),ANTNNA(058),ANTNNA(059),ANTNNA(060)/
     *   20.70,     21.20,     20.90,     21.20,     21.90,
     *   23.10,     23.40,     23.40,     22.90,     22.20/
      DATA ANTNNA(061),ANTNNA(062),ANTNNA(063),ANTNNA(064),ANTNNA(065),
     *     ANTNNA(066),ANTNNA(067),ANTNNA(068),ANTNNA(069),ANTNNA(070)/
     *   21.90,     22.10,     22.20,     22.20,     22.40,
     *   22.10,     21.90,     21.60,     21.90,     22.10/
      DATA ANTNNA(71)/22.10/
C
C     THIS SUBROUTINE RETURNS A GAIN VALUE FOR AN ANGLE
C
C     ANGLE IS THE DIFFERENCE OF THE ANTENNA ANGLE AND THE PITCH
C     ANTANG IS THE ANTENNA ANGLE WITH RESPECT TO THE AIRCRAFT
C     PITCH IS THE AIRCRAFT PITCH ANGLE
C     ALL ANGLES ARE EXPECTED TO BE EXPRESSED IN RADIANS
C
C     THE RANGE OF VALUES FOR ANGLE IS:  -70.9 TO 70.9 DEGREES
C     IF AN ANGLE FALLS OUT OF THIS RANGE, THE CLOSEST GAIN
C     VALUE WILL BE RETURNED
C
      ANGLE = ANTANG-PITCH
      INDEX=IFIX((ANGLE*57.3+70.)/2.)+1
      IF(INDEX.LE.0) GO TO 30
      IF(INDEX.GE.71) GO TO 10
      ANGLZ=FLOAT(INDEX-1)*2.-70.
      GAIN=ANTNNA(INDEX)+(ANTNNA(INDEX+1)-ANTNNA(INDEX))*ABS
     $((ANGLE*57.3-ANGLZ)/2.0)
      RETURN
   10 GAIN=ANTNNA(71)
      RETURN
   30 GAIN=ANTNNA(1)
      RETURN
```

```
      END


C  **  ANTENNA GAIN FUNCTION FOR 1.6GHZ HV DATA
      REAL FUNCTION GAIN(ANTANG,PITCH)
      REAL ANTENNA,ANGLE,ANTANG,PITCH
      DIMENSION ANTENNA(71)
C
C     GAIN VALUES FOR 1.60 KHC ANTENNA, CROSS PLOARIZATION (H-V)
C
      DATA ANTENNA(001),ANTENNA(002),ANTENNA(003),ANTENNA(004),ANTENNA(005),
     *     ANTENNA(006),ANTENNA(007),ANTENNA(008),ANTENNA(009),ANTENNA(010)/
     *   16.40,     17.20,     17.40,     17.70,     18.20,
     *   18.40,     18.70,     19.40,     19.60,     19.90/
      DATA ANTENNA(011),ANTENNA(012),ANTENNA(013),ANTENNA(014),ANTENNA(015),
     *     ANTENNA(016),ANTENNA(017),ANTENNA(018),ANTENNA(019),ANTENNA(020)/
     *   20.10,     20.20,     20.40,     20.40,     20.40,
     *   20.40,     20.60,     20.40,     20.20,     20.10/
      DATA ANTENNA(021),ANTENNA(022),ANTENNA(023),ANTENNA(024),ANTENNA(025),
     *     ANTENNA(026),ANTENNA(027),ANTENNA(028),ANTENNA(029),ANTENNA(030)/
     *   20.20,     19.90,     19.90,     19.90,     19.40,
     *   19.40,     19.20,     19.40,     19.40,     19.90/
      DATA ANTENNA(031),ANTENNA(032),ANTENNA(033),ANTENNA(034),ANTENNA(035),
     *     ANTENNA(036),ANTENNA(037),ANTENNA(038),ANTENNA(039),ANTENNA(040)/
     *   20.20,     20.40,     20.70,     20.70,     20.40,
     *   20.20,     19.70,     18.90,     18.40,     17.60/
      DATA ANTENNA(041),ANTENNA(042),ANTENNA(043),ANTENNA(044),ANTENNA(045),
     *     ANTENNA(046),ANTENNA(047),ANTENNA(048),ANTENNA(049),ANTENNA(050)/
     *   17.40,     17.90,     17.90,     18.40,     18.20,
     *   17.40,     16.40,     16.40,     16.90,     16.90/
      DATA ANTENNA(051),ANTENNA(052),ANTENNA(053),ANTENNA(054),ANTENNA(055),
     *     ANTENNA(056),ANTENNA(057),ANTENNA(058),ANTENNA(059),ANTENNA(060)/
     *   16.90,     16.90,     16.70,     17.20,     18.20,
     *   19.40,     19.40,     19.70,     19.40,     18.90/
      DATA ANTENNA(061),ANTENNA(062),ANTENNA(063),ANTENNA(064),ANTENNA(065),
     *     ANTENNA(066),ANTENNA(067),ANTENNA(068),ANTENNA(069),ANTENNA(070)/
     *   18.90,     19.10,     19.20,     18.90,     18.40,
     *   17.40,     16.70,     16.10,     15.90,     15.60/
      DATA ANTENNA(71)/15.40/
C
C     THIS SUBROUTINE RETURNS A GAIN VALUE FOR AN ANGLE
C
C     ANGLE IS THE DIFFERENCE OF THE ANTENNA ANGLE AND THE PITCH
C     ANTANG IS THE ANTENNA ANGLE WITH RESPECT TO THE AIRCRAFT
C     PITCH IS THE AIRCRAFT PITCH ANGLE
C     ALL ANGLES ARE EXPECTED TO BE EXPRESSED IN RADIANS
C
C     THE RANGE OF VALUES FOR ANGLE IS:  -70.9 TO 70.9 DEGREES
C     IF AN ANGLE FALLS OUT OF THIS RANGE, THE CLOSEST GAIN
```

```
C       VALUE WILL BE RETURNED
C
        ANGLE = ANTANG-PITCH
        INDEX=IFIX((ANGLE*57.3+70.)/2.)+1
        IF(INDEX.LE.0) GO TO 30
        IF(INDEX.GE.71)GO TO 10
        ANGLZ=FLOAT(INDEX-1)*2.-70.
        GAIN=ANTNNA(INDEX)+(ANTNNA(INDEX+1)-ANTNNA(INDEX))*ABS
       $((ANGLE*57.3-ANGLZ)/2.0)
        RETURN
   10   GAIN=ANTNNA(71)
        RETURN
   30   GAIN=ANTNNA(1)
        RETURN
        END


C       GAIN VALUES FOR .400 KMC ANTENNA, VERTICAL POLARIZATION
        REAL FUNCTION GAIN(ANTANG,PITCH)
        REAL ANTNNA,ANGLE,ANTANG,PITCH
        DIMENSION ANTNNA(71)
C
C
        DATA ANTNNA(001),ANTNNA(002),ANTNNA(003),ANTNNA(004),ANTNNA(005),
       *     ANTNNA(006),ANTNNA(007),ANTNNA(008),ANTNNA(009),ANTNNA(010)/
       *   10.40,     12.40,     14.80,     16.40,     18.40,
       *   19.40,     20.80,     21.80,     22.80,     23.40/
        DATA ANTNNA(011),ANTNNA(012),ANTNNA(013),ANTNNA(014),ANTNNA(015),
       *     ANTNNA(016),ANTNNA(017),ANTNNA(018),ANTNNA(019),ANTNNA(020)/
       *   23.80,     24.40,     24.80,     24.80,     24.80,
       *   24.40,     23.80,     22.80,     22.40,     21.40/
        DATA ANTNNA(021),ANTNNA(022),ANTNNA(023),ANTNNA(024),ANTNNA(025),
       *     ANTNNA(026),ANTNNA(027),ANTNNA(028),ANTNNA(029),ANTNNA(030)/
       *   19.40,     18.40,     16.80,     15.40,     13.40,
       *   11.40,      9.80,      7.80,      6.80,      5.80/
        DATA ANTNNA(031),ANTNNA(032),ANTNNA(033),ANTNNA(034),ANTNNA(035),
       *     ANTNNA(036),ANTNNA(037),ANTNNA(038),ANTNNA(039),ANTNNA(040)/
       *    4.80,      4.40,      3.80,      3.40,      2.80,
       *    2.80,      1.80,      1.40,      0.40,     -0.60/
        DATA ANTNNA(041),ANTNNA(042),ANTNNA(043),ANTNNA(044),ANTNNA(045),
       *     ANTNNA(046),ANTNNA(047),ANTNNA(048),ANTNNA(049),ANTNNA(050)/
       *   -1.60,     -2.20,     -3.20,     -4.20,     -4.60,
       *   -4.60,     -4.60,     -4.20,     -3.20,     -2.60/
        DATA ANTNNA(051),ANTNNA(052),ANTNNA(053),ANTNNA(054),ANTNNA(055),
       *     ANTNNA(056),ANTNNA(057),ANTNNA(058),ANTNNA(059),ANTNNA(060)/
       *   -1.60,     -1.20,     -0.60,     -0.60,     -0.60,
       *   -0.20,     -0.60,     -0.60,     -1.20,     -1.20/
        DATA ANTNNA(061),ANTNNA(062),ANTNNA(063),ANTNNA(064),ANTNNA(065),
       *     ANTNNA(066),ANTNNA(067),ANTNNA(068),ANTNNA(069),ANTNNA(070)/
```

ORIGINAL PAGE IS
OF POOR QUALITY

```
     *   -2.20,    -2.60,    -3.60,    -4.60,    -5.60,
     *   -6.60,    -8.20,    -9.60,   -11.20,   -13.60/
      DATA ANTENNA(71)/-15.60/
C
C     THIS SUBROUTINE RETURNS A GAIN VALUE FOR AN ANGLE
C
C     ANGLE IS THE DIFFERENCE OF THE ANTENNA ANGLE AND THE PITCH
C     ANTANG IS THE ANTENNA ANGLE WITH RESPECT TO THE AIRCRAFT
C     PITCH IS THE AIRCRAFT PITCH ANGLE
C     ALL ANGLES ARE EXPECTED TO BE EXPRESSED IN RADIANS
C
C     THE RANGE OF VALUES FOR ANGLE IS:  -70.9 TO 70.9 DEGREES
C     IF AN ANGLE FALLS OUT OF THIS RANGE, THE CLOSEST GAIN
C     VALUE WILL BE RETURNED
C
      ANGLE = ANTANG-PITCH
      INDEX=IFIX((ANGLE*57.3+70.)/2.)+1
      IF(INDEX.LE.0) GO TO 30
      IF(INDEX.GE.71) GO TO 10
      ANGLZ=FLOAT(INDEX-1)*2.-70.
      GAIN=ANTENNA(INDEX)+(ANTENNA(INDEX+1)-ANTENNA(INDEX))*ABS
     $((ANGLE*57.3-ANGLZ)/2.0)
      RETURN
   10 GAIN=ANTENNA(71)
      RETURN
   30 GAIN=ANTENNA(1)
      RETURN
      END


C     GAIN VALUES FOR .400 KHC ANTENNA, HORIZONTAL POLARIZATION
      REAL FUNCTION GAIN(ANTANG,PITCH)
      REAL ANTENNA,ANGLE,ANTANG,PITCH
      DIMENSION ANTENNA(71)
C
C
      DATA ANTENNA(001),ANTENNA(002),ANTENNA(003),ANTENNA(004),ANTENNA(005),
     *     ANTENNA(006),ANTENNA(007),ANTENNA(008),ANTENNA(009),ANTENNA(010)/
     *   29.40,    29.40,    29.40,    29.40,    29.40,
     *   28.80,    28.80,    27.80,    27.40,    26.80/
      DATA ANTENNA(011),ANTENNA(012),ANTENNA(013),ANTENNA(014),ANTENNA(015),
     *     ANTENNA(016),ANTENNA(017),ANTENNA(018),ANTENNA(019),ANTENNA(020)/
     *   26.40,    25.40,    24.40,    23.40,    21.80,
     *   20.80,    19.40,    17.80,    15.80,    13.80/
      DATA ANTENNA(021),ANTENNA(022),ANTENNA(023),ANTENNA(024),ANTENNA(025),
     *     ANTENNA(026),ANTENNA(027),ANTENNA(028),ANTENNA(029),ANTENNA(030)/
     *   11.80,     9.80,     7.80,     5.80,     3.80,
     *    2.40,     0.40,    -0.60,    -1.60,    -2.20/
      DATA ANTENNA(031),ANTENNA(032),ANTENNA(033),ANTENNA(034),ANTENNA(035),
```

```
     *      ANTNNA(036),ANTNNA(037),ANTNNA(038),ANTNNA(039),ANTNNA(040)/
     *   -2.60,     -2.60,     -2.60,     -3.20,     -3.20,
     *   -3.60,     -4.20,     -4.20,     -4.60,     -5.60/
      DATA ANTNNA(041),ANTNNA(042),ANTNNA(043),ANTNNA(044),ANTNNA(045),
     *      ANTNNA(046),ANTNNA(047),ANTNNA(048),ANTNNA(049),ANTNNA(050)/
     *   -6.20,     -7.20,     -8.20,     -8.60,     -9.20,
     *   -9.60,     -9.60,     -9.60,     -9.20,     -8.60/
      DATA ANTNNA(051),ANTNNA(052),ANTNNA(053),ANTNNA(054),ANTNNA(055),
     *      ANTNNA(056),ANTNNA(057),ANTNNA(058),ANTNNA(059),ANTNNA(060)/
     *   -8.20,     -7.60,     -6.60,     -6.20,     -5.60,
     *   -5.20,     -4.60,     -4.60,     -4.20,     -3.60/
      DATA ANTNNA(061),ANTNNA(062),ANTNNA(063),ANTNNA(064),ANTNNA(065),
     *      ANTNNA(066),ANTNNA(067),ANTNNA(068),ANTNNA(069),ANTNNA(070)/
     *   -3.60,     -3.60,     -3.60,     -3.60,     -4.20,
     *   -4.20,     -4.60,     -5.20,     -5.20,     -6.20/
      DATA ANTNNA(71)/-6.60/
C
C     THIS SUBROUTINE RETURNS A GAIN VALUE FOR AN ANGLE
C
C     ANGLE IS THE DIFFERENCE OF THE ANTENNA ANGLE AND THE PITCH
C     ANTANG IS THE ANTENNA ANGLE WITH RESPECT TO THE AIRCRAFT
C     PITCH IS THE AIRCRAFT PITCH ANGLE
C     ALL ANGLES ARE EXPECTED TO BE EXPRESSED IN RADIANS
C
C     THE RANGE OF VALUES FOR ANGLE IS:  -70.9 TO 70.9 DEGREES
C     IF AN ANGLE FALLS OUT OF THIS RANGE, THE CLOSEST GAIN
C     VALUE WILL BE RETURNED
C
      ANGLE = ANTANG-PITCH
      INDEX=IFIX((ANGLE*57.3+70.)/2.)+1
      IF(INDEX.LE.0) GO TO 30
      IF(INDEX.GE.71) GO TO 10
      ANGLZ=FLOAT(INDEX-1)*2.-70.
      GAIN=ANTNNA(INDEX)+(ANTNNA(INDEX+1)-ANTNNA(INDEX))*ABS
     $((ANGLE*57.3-ANGLZ)/2.0)
      RETURN
   10 GAIN=ANTNNA(71)
      RETURN
   30 GAIN=ANTNNA(1)
      RETURN
      END


C     GAIN VALUES FOR .400 KHC ANTENNA,  CROSS POLARIZATION
      REAL FUNCTION GAIN(ANTANG,PITCH)
      REAL ANTNNA,ANGLE,ANTANG,PITCH
      DIMENSION ANTNNA(71)
C
C
```

```
      DATA ANTNNA(001),ANTNNA(002),ANTNNA(003),ANTNNA(004),ANTNNA(005),
     *     ANTNNA(006),ANTNNA(007),ANTNNA(008),ANTNNA(009),ANTNNA(010)/
     *   19.90,     20.90,     22.10,     22.90,     23.90,
     *   24.10,     24.80,     24.80,     25.10,     25.10/
      DATA ANTNNA(011),ANTNNA(012),ANTNNA(013),ANTNNA(014),ANTNNA(015),
     *     ANTNNA(016),ANTNNA(017),ANTNNA(018),ANTNNA(019),ANTNNA(020)/
     *   25.10,     24.90,     24.60,     24.10,     23.30,
     *   22.60,     21.40,     20.30,     18.90,     17.60/
      DATA ANTNNA(021),ANTNNA(022),ANTNNA(023),ANTNNA(024),ANTNNA(025),
     *     ANTNNA(026),ANTNNA(027),ANTNNA(028),ANTNNA(029),ANTNNA(030)/
     *   15.60,     14.10,     12.30,     10.60,      8.60,
     *    6.90,      5.10,      3.60,      2.60,      1.80/
      DATA ANTNNA(031),ANTNNA(032),ANTNNA(033),ANTNNA(034),ANTNNA(035),
     *     ANTNNA(036),ANTNNA(037),ANTNNA(038),ANTNNA(039),ANTNNA(040)/
     *    1.10,      0.90,      0.60,      0.10,     -0.20,
     *   -0.40,     -1.20,     -1.40,     -2.10,     -3.10/
      DATA ANTNNA(041),ANTNNA(042),ANTNNA(043),ANTNNA(044),ANTNNA(045),
     *     ANTNNA(046),ANTNNA(047),ANTNNA(048),ANTNNA(049),ANTNNA(050)/
     *   -4.10,     -5.10,     -5.90,     -6.60,     -7.10,
     *   -7.40,     -7.40,     -6.90,     -6.20,     -5.60/
      DATA ANTNNA(051),ANTNNA(052),ANTNNA(053),ANTNNA(054),ANTNNA(055),
     *     ANTNNA(056),ANTNNA(057),ANTNNA(058),ANTNNA(059),ANTNNA(060)/
     *   -5.10,     -4.40,     -3.90,     -3.40,     -3.10,
     *   -2.70,     -2.60,     -2.60,     -2.70,     -2.40/
      DATA ANTNNA(061),ANTNNA(062),ANTNNA(063),ANTNNA(064),ANTNNA(065),
     *     ANTNNA(066),ANTNNA(067),ANTNNA(068),ANTNNA(069),ANTNNA(070)/
     *   -2.90,     -3.10,     -3.60,     -4.10,     -4.90,
     *   -5.40,     -6.40,     -7.40,     -8.20,     -9.90/
      DATA ANTNNA(71)/-11.10/
C
C     THIS SUBROUTINE RETURNS A GAIN VALUE FOR AN ANGLE
C
C     ANGLE IS THE DIFFERENCE OF THE ANTENNA ANGLE AND THE PITCH
C     ANTANG IS THE ANTENNA ANGLE WITH RESPECT TO THE AIRCRAFT
C     PITCH IS THE AIRCRAFT PITCH ANGLE
C     ALL ANGLES ARE EXPECTED TO BE EXPRESSED IN RADIANS
C
C     THE RANGE OF VALUES FOR ANGLE IS:  -70.9 TO 70.9 DEGREES
C     IF AN ANGLE FALLS OUT OF THIS RANGE, THE CLOSEST GAIN
C     VALUE WILL BE RETURNED
C
      ANGLE = ANTANG-PITCH
      INDEX=IFIX((ANGLE*57.3+70.)/2.)+1
      IF(INDEX.LE.0) GO TO 30
      IF(INDEX.GE.71) GO TO 10
      ANGLZ=FLOAT(INDEX-1)*2.-70.
      GAIN=ANTNNA(INDEX)+(ANTNNA(INDEX+1)-ANTNNA(INDEX))*ABS
     $((ANGLE*57.3-ANGLZ)/2.0)
      RETURN
   10 GAIN=ANTNNA(71)
```

ORIGINAL PAGE IS OF POOR QUALITY

```
      RETURN
   30 GAIN=ANTNNA(1)
      RETURN
      END
```

APPENDIX D

MEMORANDUMS

RSC-159 AND 160

TEXAS A&M UNIVERSITY
REMOTE SENSING CENTER
COLLEGE STATION TEXAS 77843

*College of Agriculture*
*College of Engineering*
*College of Geosciences*
*College of Science*

TECHNICAL MEMORANDUM RSC-159

# COMPARISON OF SCATTEROMETER RESOLUTION CELL AREA APPROXIMATIONS

by

Billy V. Clark

and

Richard W. Newton

March 1979

108

COMPARISON OF SCATTEROMETER RESOLUTION

CELL AREA APPROXIMATIONS

by

Billy V. Clark and Richard W. Newton

## 1.0 GENERAL

For some time there have been two approaches to evaluating area, A, used in the scattering coefficient equation

$$\hat{\sigma}_0 = \frac{(4\pi)^3}{\lambda^2} \frac{R^4}{A} \frac{P_r}{P_t} \frac{C_a}{K_s} \frac{Z(f)}{G_r G_t} \qquad (1)$$

The approach used by NASA/ESD was to simply calculate the rectangular area along the ground track line, Figure 1. To account for roll and drift angles this area was divided by cosine roll times cosine drift.

The approach used at TAMU is to compute the actual cell length between doppler contours, BB' in Figure 2, accounting for actual roll and drift values. The width of the cell is approximated very closely by the expression for W' in Figure 2. The product, BB'xW', is the approximation to the area that is used by TAMU in scatterometer data reduction.

Since there have been some questions about the relative accuracy of the two area calculations, more detailed analysis of the area boundaries and more refined calculations of the area have been performed at TAMU Several types of calculations were made:

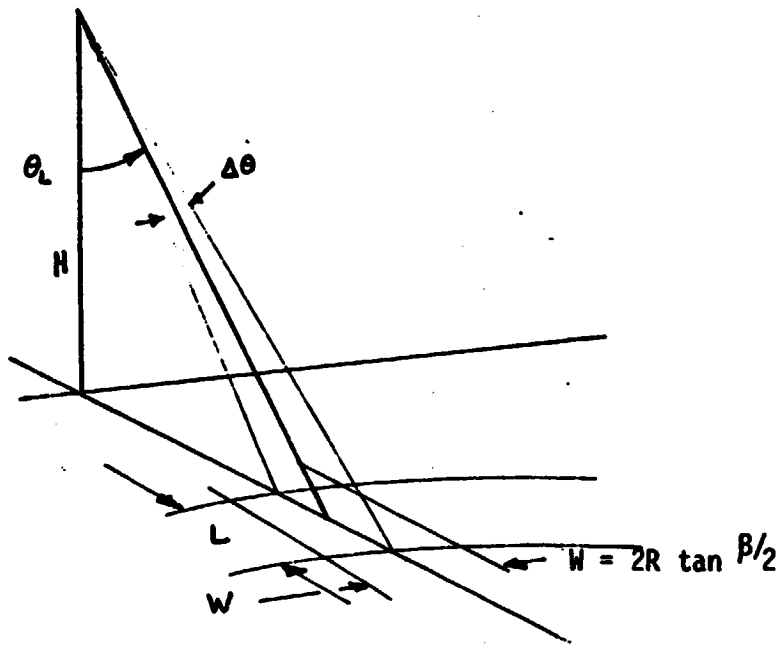


a) $$L = \frac{(BWA)\lambda H \cos\frac{\Delta\theta}{2}}{2V \cos^3 \theta_L}$$ , BWA = ACTUAL BANDWIDTH

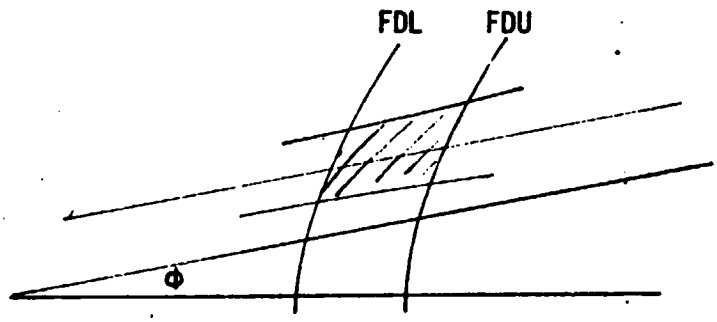


b) $$W' = \frac{2H \tan \beta/2}{\cos\theta\cos\phi\cos\psi}$$

c) Area $\simeq$ LW'

Figure 2. Equations used by NASA/ESD to compute area.

PRECEDING PAGE BLANK NOT FILMED

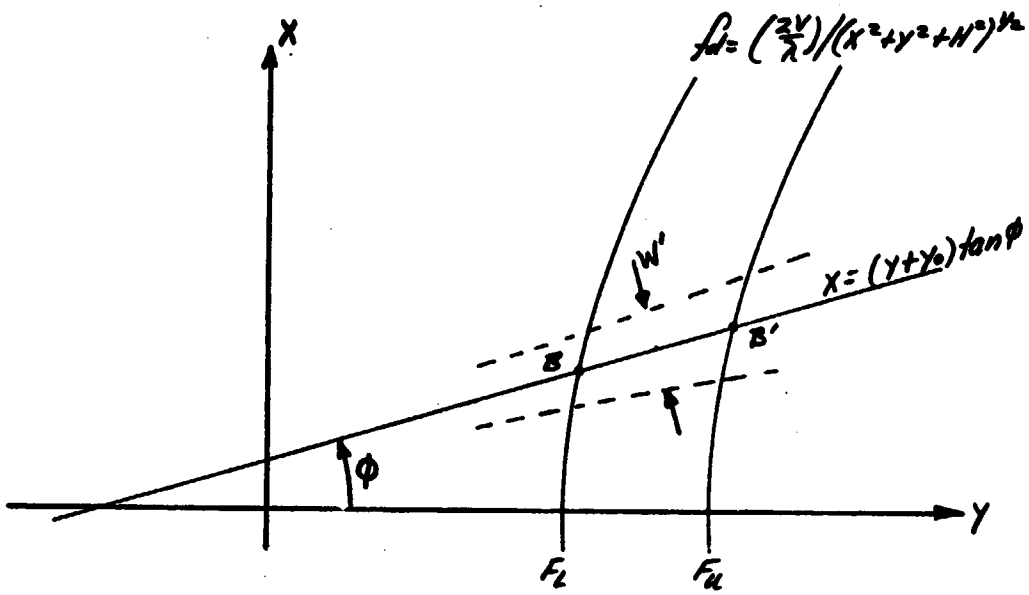


$$Y_i = \frac{-h}{1-k_i\cos^2\phi}\left\{\tan\phi\tan\psi \pm \sqrt{\tan^2\psi(k_i-1)+k_i\cos^2\phi-1}\right\}, \quad k_i = \left(\frac{2V}{\lambda f_i}\right)^2$$

$BB' = (Y_2-Y_1)/\cos\phi = L'$, actual cell length

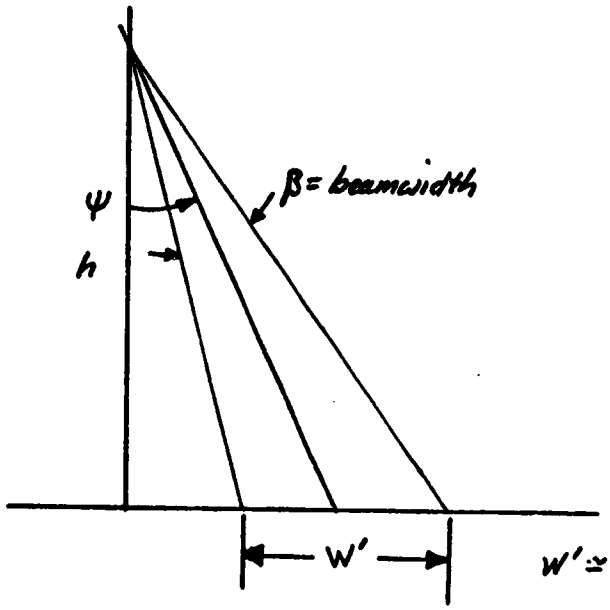


$$W' \simeq \frac{2h\tan\beta/2}{\cos\theta\cos\psi}$$

$$\text{Area} \simeq L'W' = \frac{W'(Y_2-Y_1)}{\cos\phi}$$

Figure 2. Equations used by TAMU to compute area.

a. Area of trapezium (no parallel sides)

b. Area of N parallelograms

c. Integration by Simpson's Rule

d. Quadratic Formula to calculate BB'.

The results of these different approaches to calculating the ground cell area indicate in all cases that the technique currently used at TAMU is a better over-all area estimator than the rectangular approximation. In the course of this analysis the mathmatical development of the expression for y, page 9 of Reference [1], was reviewed. It was found that if the sign used before the square-root symbol is positive, better agreement was achieved with the more accurate area values found by numerically integrating over the cell. The form of the equation that should be used follows:

$$Y = -\frac{h}{1-k\cos^2\phi}\left\{\tan\phi\tan\psi + \sqrt{\tan^2\psi(k-1)+k\cos^2\phi-1}\right\} \qquad (1.a)$$

## 2.0 AREA ESTIMATE BY TRAPEZIUM

This approach makes only one assumption in computing the area; i.e., the lines connecting the four corner coordinates are straight, see Figure 3. Examination of the actual coordinate values at A, B, C, and D for viewing angles between -4° and -52° confirm that this is a reasonable assumption.

The calculation technique is to use the equations for the four lines labelled XU, XL, FL and FU, Figure 2, to derive the actual coordinates at A, B, C, and D. The value for X at any point along XU can be shown to be given by:

$$XU = \frac{Y(P2 + M\cos\phi) - H\sin\psi}{(P1 - M\sin\phi)} \qquad (2)$$

where

$P1 = \cos\phi\cos\psi$

$P2 = \sin\phi\cos\psi$

$M = (\tan \beta/2)/\sin\theta'_L$

$\beta$ = antenna bemwidth referenced to the aircraft

$\theta'_L$ = viewing angle through the antenna coordinate system

$H$ = aircraft altitude

$\phi$ = drift angle

$\psi$ = roll angle

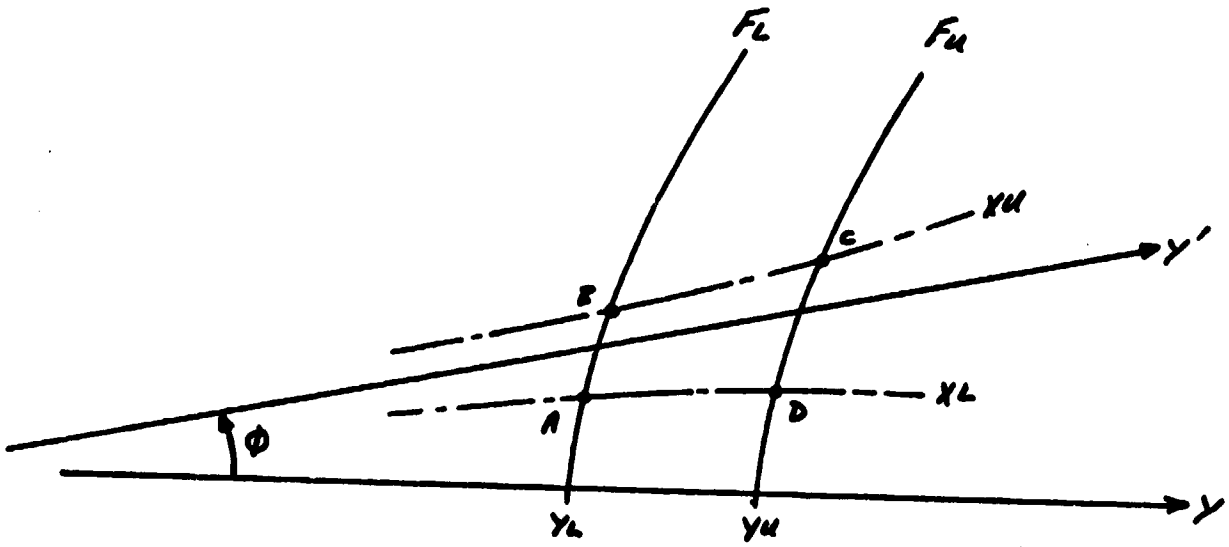


Figure 3. Trapezium Area.

Similarly, along the curve XL, the value of X is given by

$$XL = \frac{Y(P2 - M\cos\phi) - H\sin\psi}{(P1 + M\sin\phi)} \tag{3}$$

And, of course, along the doppler contours the value of X is given by

$$XD = \left[\frac{Y^2 - H^2\tan^2\theta_d}{\tan^2\theta_d}\right]^{1/2} \tag{3.a}$$

where $\theta_d$ = viewing angle referenced to the ground track, Y-axis. By iterating the value of Y, beginning at YL, the corner coordinates are found.

Next, with the assumption that the connecting lines are straight, the area is found by

$$A = (A1 + A2) - (A3 + A4 + A5) \tag{4}$$

where

$$A1 = (X_B - X_A)\ (Y_B - Y_A)/2 \tag{5}$$

$$A2 = (Y_C - Y_B)\ (X_C + X_B)/2 \tag{6}$$

$$A3 = (Y_C - Y_D)\ (X_C - X_C - X_D)/2 \tag{7}$$

$$A4 = (Y_D - Y_A)\ (X_D - X_A)/2 \tag{8}$$

$$A5 = (Y_C - Y_D)\ (X_D - X_A) \tag{9}$$

## 3.0 AREA ESTIMATION BY STRIP INTEGRATION

This technique uses the sum of the area in N strips, each consisting of a selectively small parallelogram, to estimate the area. As illustrated in Figure 4, the length of mini-rectangle is the distance between the upper and lower frequency doppler lines. The length, DL, is calculated at each step using the expressions

$$Y_{Li} = \frac{\left(-\tan\phi \tan\psi_i + \left[\tan^2\psi_i (K_L - 1) + K_L \cos^2\phi - 1\right]^{1/2}\right)}{(1 - K_L \cos^2\phi)} \tag{10}$$

$$Y_{Ui} = \frac{\left(-\tan\phi \tan\psi_i + \left[\tan^2\psi_i (K_U - 1) + K_U \cos^2\phi - 1\right]^{1/2}\right)}{(1 - K_U \cos^2\phi)} \tag{11}$$

where $$K_L = \left(2V/\lambda F_L\right)^2 \tag{12}$$

$$K_U = \left(2V/\lambda F_U\right)^2 \tag{13}$$

and $$DL = (Y_U - Y_L)/\cos\phi \tag{14}$$

The first step was performed with $\psi_1 = \psi - \beta/2$, and at each successive step with $\psi_{i+1} = \psi_i + \Delta\psi$, using $\Delta\psi = \beta/500$?

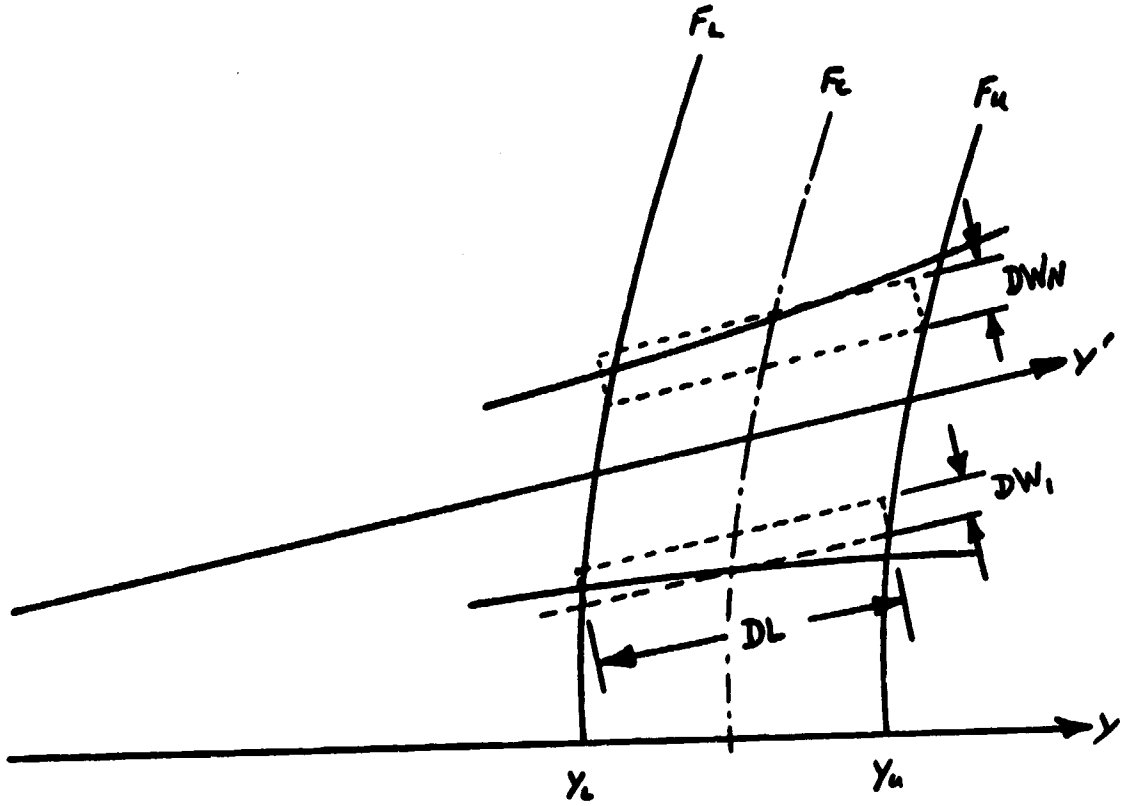


Figure 4. Area of N Parallelograms.

ORIGINAL PAGE IS
OF POOR QUALITY

The value of $DW_i$ was calculated by first evaluating range, $R_i$, to the center of the line DL and then using the expression

$$DW_i = R_i \tan \Delta\psi \cos \psi_i \left(1. + \tan \psi_i \tan(\psi_i + \Delta\psi)\right) \qquad (15)$$

The basis for the above expression is shown in Figure 5.

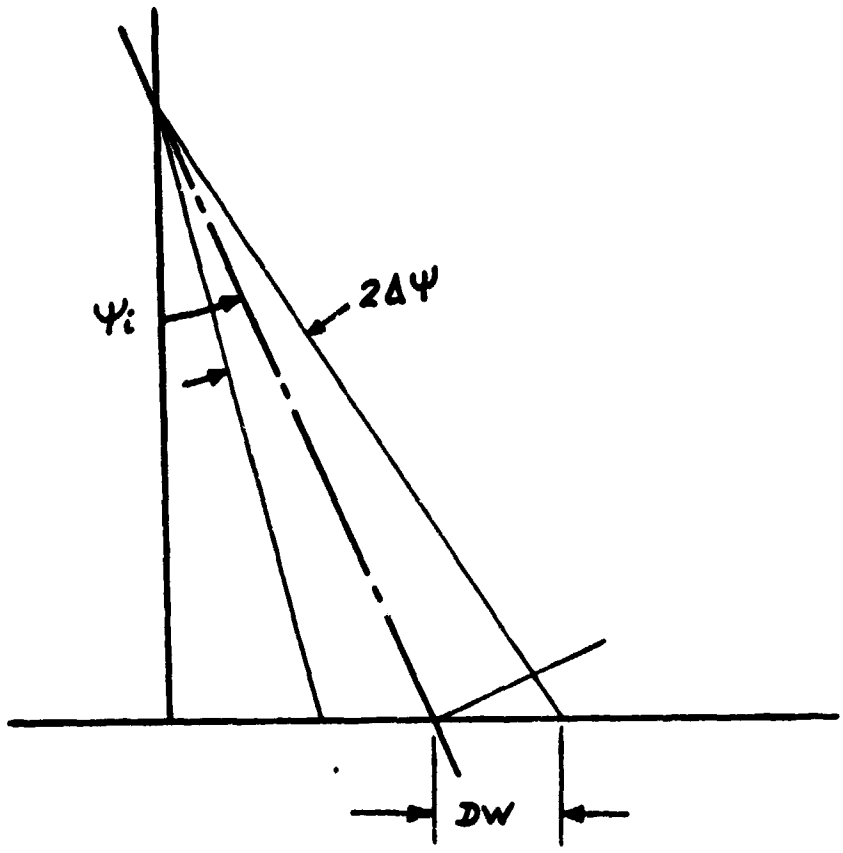


$$DW = R\tan\Delta\psi_i \cos\psi_i + R\tan\Delta\psi_i \sin\psi_i \tan(\psi_i + \Delta\psi)$$

$$DW = R\tan\Delta\psi_i \cos\psi_i (1. + \tan\psi_i \tan(\psi_i + \Delta\psi))$$

Figure 5. Evaluation of DW

The value of $DW_i$ was calculated by first evaluating range, $R_i$, to the center of the line DL and then using the expression

$$DW_i = R_i \tan \Delta\psi \cos \psi_i \left(1. + \tan \psi_i \tan(\psi_i + \Delta\psi)\right) \qquad (15)$$

The basis for the above expression is shown in Figure 5.

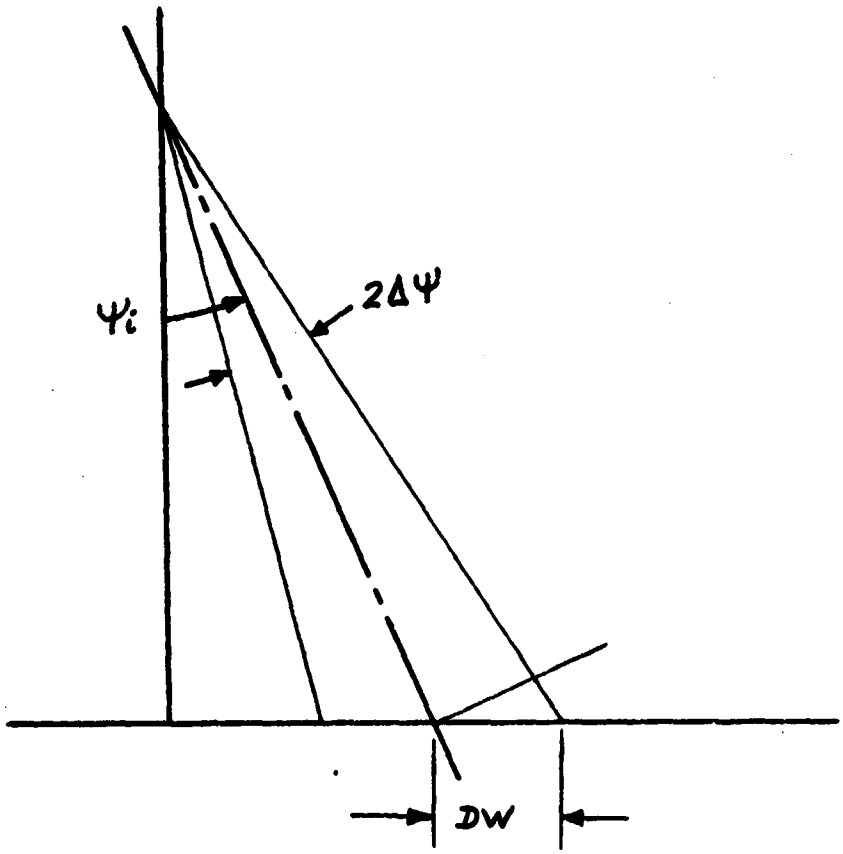


$$DW = R\tan\Delta\psi_i \cos\psi_i + R\tan\Delta\psi_i \sin\psi_i \tan(\psi_i + \Delta\psi)$$

$$DW = R\tan\Delta\psi_i \cos\psi_i (1. + \tan\psi_i \tan(\psi_i + \Delta\psi))$$

Figure 5. Evaluation of DW

## 4.0 AREA ESTIMATION FOR NUMERICAL INTEGRATION (SIMPSON'S RULE)

This approach is similar to the trapezium technique, but makes use of a more refined algebraic expression for areas beneath a curved line (2).

Using the equations (2), (3), and (3.a) above, and having already found the intersection YL, YU, A, B, C, and D in Figure 3, repeated applications of Simpson's rule for numerical integration are made to find the areas:

A1: beneath line FL from Y = Y(A) to Y = Y(B),

A2: beneath line XU from Y = Y(B) to Y = Y(C),

A3: beneath line FL from Y = YL to Y = Y(A),

A4: beneath line XL from Y = Y(A) to Y = Y(D),

A5: beneath line FU from Y = YU to Y = Y(D),

A6: beneath line FU from Y = YU to Y = Y(C).

For A1, A3, A5, and A6 a value of N = 8 was used. For A2 and A4 a value of N = 32 was used, where N specifies the number of times the interval is halved between the limits of integration. The total cell area is then calculated as:

$$A = A1 + A2 + A5 - (A3 + A4 + A6)$$

## 5.0 QUADRATIC FORMULA APPLICATION

Using the expression for Y in the quadratic form given at the top of page 9, reference [1], the value of Y1 and Y2 were calculated. Next, the final expression on the same page was implemented, using the value of W' specified on the same page.

## 6.0 COMPARISON OF RESULTS

The results of area calculation using the above techniques were compared to the results of the Rectangular and Doppler techniques. These are summarized in Table 1. The results are graphically presented in Figures 6 and 7. The tables clearly show that the TAMU method has better general agreement with the integrated values for area.

Notice that in all cases where there is a drift value the Rectangular area approximation departs rapidly from the other estimation techniques. Although the so called Doppler Contour approximation is not considered perfect, it appears to be the best of the two "short cut" methods, Figures 1 and 2, for handling excursion in drift.

TABLE 1

Area Comparisons for Sever Calculation Tecniques

AT = Trapezium (4 - corners connected by straight lines)

AP = Parallelogram (integrating of stripes)

AQ = Quadratic Formula

AR = Rectangular (ESD algorithm)

AD = Doppler contour (Reference [1], page 9)

Roll, $\psi$, = 0.

| Drift O, Deg | Viewing Angle $\theta_L$, Deg | AT | AP | AQ | AR | AD | $\frac{AR-AD}{AD}$ *100 |
|---|---|---|---|---|---|---|---|
| 0 | -5 | 2104.8 | _____ | 2100.2 | 2100.2 | 2100.2 | 0.0 |
| | -10 | 2207.4 | 2211.0 | 2202.4 | 2202.4 | 2202.4 | 0.0 |
| | -20 | 2222.1 | 2211.35 | 2209.6 | 2209.6 | 2209.6 | 0.0 |
| | -40 | 3053.4 | 3027.06 | 3024.7 | 3024.7 | 3024.7 | 0.0 |
| -4 | -5 | 1982.0 | _____ | 2105.5 | 2105.3 | 2105.5 | 0.01 |
| | -10 | 2161.4 | 2216.7 | 2208.5 | 2208.0 | 2208.5 | -0.02 |
| | -20 | 2209.9 | 2225.0 | 2217.9 | 2215.7 | 2217.9 | -0.10 |
| | -40 | 3001.7 | 2984.1 | 2974.6 | 2959.6 | 2974.6 | -0.50 |
| 8 | -5 | 1907.1 | _____ | 2121.5 | 2121.0 | 2121.5 | -0.02 |
| | -10 | 2141.6 | 2251.7 | 2217.3 | 2215.4 | 2217.3 | -0.09 |
| | -20 | 2232.0 | 2267.0 | 2243.0 | 2234.2 | 2243.1 | -0.40 |
| | -40 | 3092.6 | 3091.7 | 3058.8 | 2996.5 | 3058.8 | -2.04 |

## 7.0 EVALUATION OF ROLL EXCURSION ON AREA VALUES

To illustrate the influence of roll on the ground cell area a typical viewing angle, -45°, and a typical drift angle, 5°, were selected. Successive ground cell areas were calculated for successively larger roll angles, beginning at 0.0°, and remaining on the same doppler center frequency. Table 2 summarizes the results. Again, as was the case in drift excursions, the rectangular area technique does not adequately approximate changes in area for the off-ground-track situation.

Finally, as can be seen from Table 2, the difference between the TAMU Doppler area and the integrated area, by Simpson's rule, is never greater than 0.5% for excursions in roll up to 6.7 degrees.

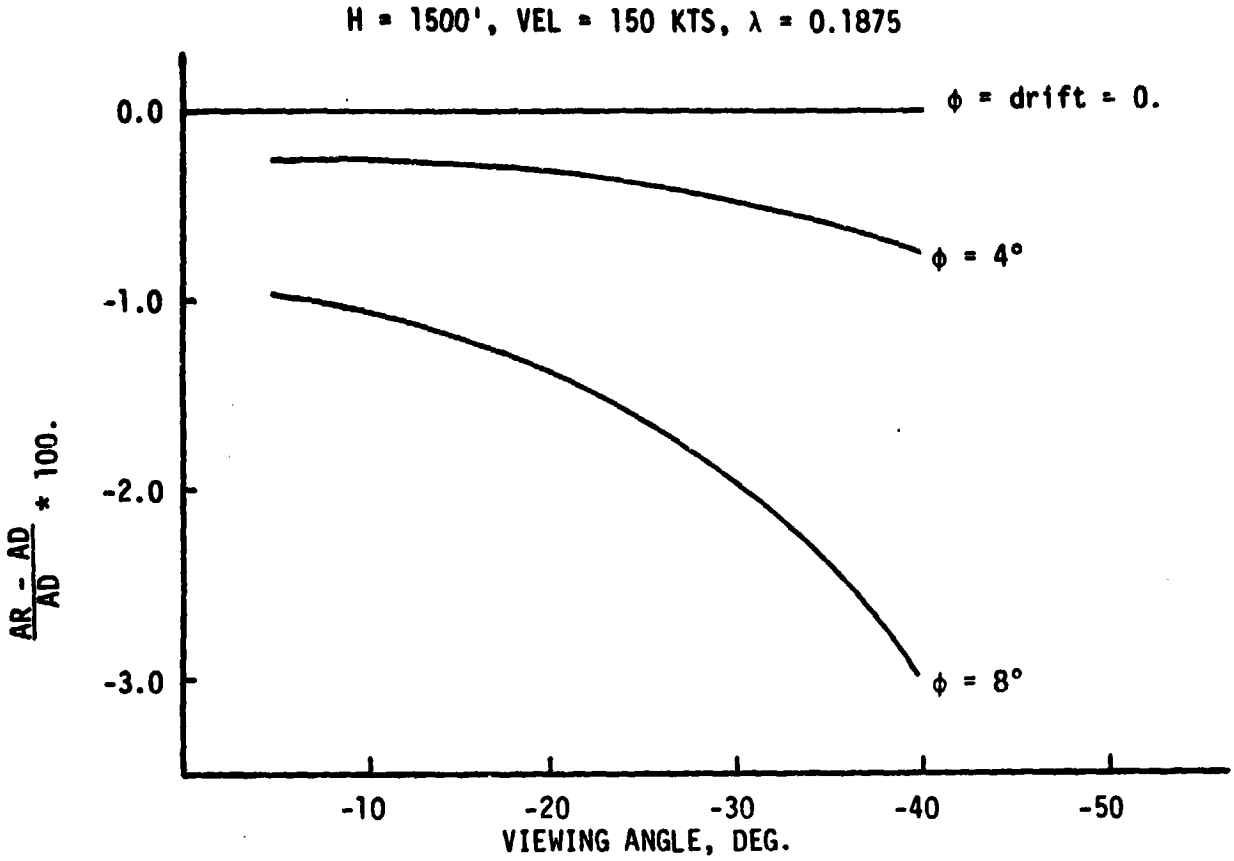


FIGURE 5. AREA COMPARISONS, DRIFT EXCURSIONS

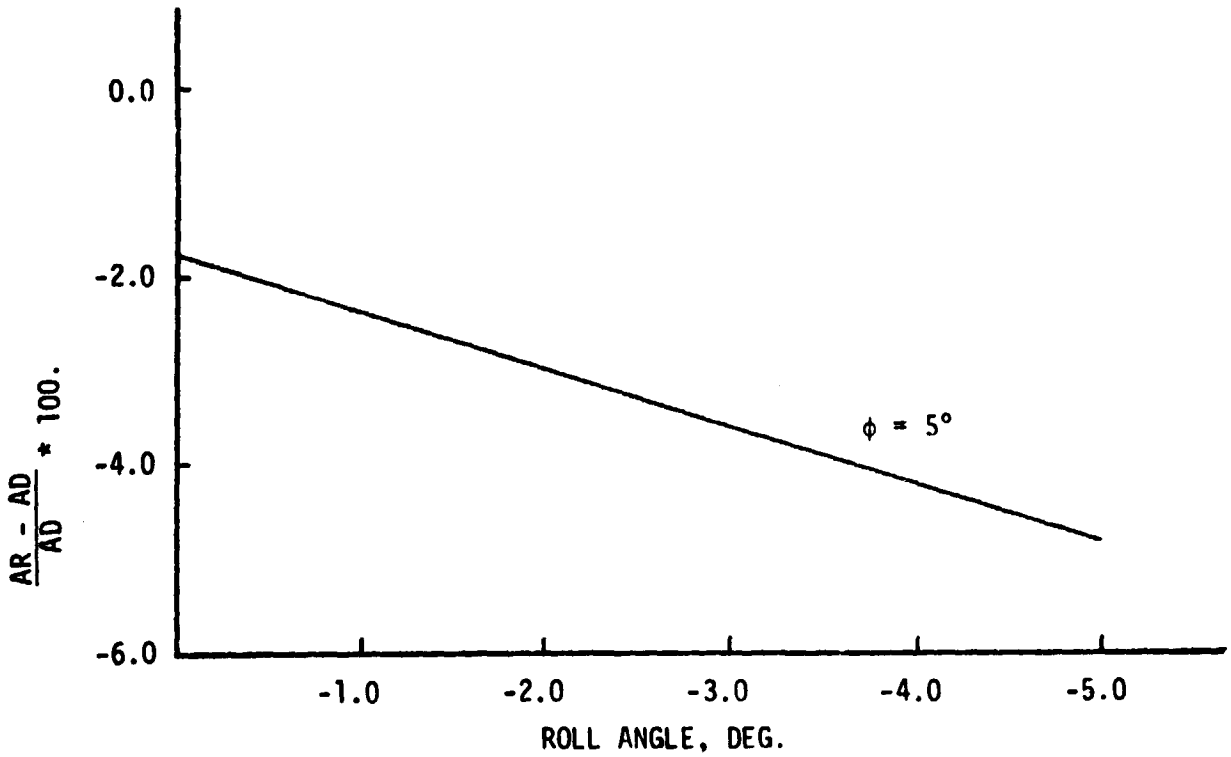


FIGURE 7. AREA COMPARISONS, ROLL EXCURSIONS

TABLE 2

Area Calculation Comparisons

AD = Doppler Area

AR = Rectangular

AQ = Quadratic Formula Application

AS = Simpson's Rules Integration

| Roll, $\psi$ Deg | DRIFT, $\phi$ Deg | AS | AQ | AD | AR | $\frac{AR-AD}{AD}$ *100 |
|---|---|---|---|---|---|---|
| 0. | 5. | 3132.9 | 3132.9 | 3133.9 | 3074.4 | -1.9 |
| -1.2 | 5. | 3157.7 | 3141.9 | 3153.9 | 3075.1 | -2.5 |
| -2.5 | 5. | 3184.1 | 3166.3 | 3178.4 | 3077.2 | -3.2 |
| -4.9 | 5. | 3241.7 | 3228.8 | 3241.2 | 3085.8 | -4.8 |
| -6.7 | 5. | 3289.1 | 3287.7 | 3300.4 | 3095.8 | -6.2 |

## REFERENCES

[1]. RSC 3182-1, "An Airborne Radar Scatterometer Signal Processing System", NASA Contract NAS 9-14493, Feb-Apr 1975.

[2]. Carnahan, Luther, Wilkes; "Applied Numerical Methods"; John Wiley & Sons, 1969, pp. 85-86.

TEXAS A&M UNIVERSITY
REMOTE SENSING CENTER
COLLEGE STATION TEXAS 77843

*College of Agriculture*
*College of Engineering*
*College of Geosciences*
*College of Science*

TECHNICAL MEMORANDUM RSC-160

# EQUATIONS FOR COMPUTING THE AREA TERM IN THE RADAR SCATTEROMETER PROCESSING ALGORITHM

BY

R. W. Newton

and

B. V. Clark

April 1979

131

# EQUATIONS FOR COMPUTING THE AREA TERM IN THE RADAR SCATTEROMETER PROCESSING ALGORITHM

by

R. W. Newton and B. V. Clark

## INTRODUCTION

The Remote Sensing Center has been funded by The Earth Observations Division of NASA/JSC through Contract NAS9-14875 to evaluate the radar scatterometer processing techniques developed by TAMU to the one recently implemented by the NASA/JSC Engineering Systems Division. After several months of effort and many personal and verbal communications, the two processing techniques were demonstrated to be comparable. The only subsystems that were not satisfactorily compared were the area computational procedure. TAMU uses the algorithm documented by Schell in Technical Memorandum RSC-119 [1], [2]. NASA/JSC used another algorithm. The largest discrepancy between these algorithms occurred at large roll and drift angles [3]. In order to insure that the output of each processing system (TAMU, NASA/JSC, hardware processors) were as consistant as possible, it was mutually agreed that the same area algorithm should be used by both TAMU and NASA/JSC. The algorithm that was agreed to by both TAMU and NASA/JSC is the one utilized by Schell [1]. It is the purpose

of this memorandum to clarify the development and utilization of these equations.

## CELL LENGTH COMPUTATION

The area algorithm approximates the true cell area by computing the length of the cell along the antenna center and multiplying this length by the width of the cell at the cell "center" defined by the filter center frequency. The cell length at each incident angle is computed by determining the points of intersection of the antenna center line with the isodoppler hyperbolas defined by the center frequency and bandwidth of the filter corresponding to each incident angle (Figure 1). The equation of the line going through the center of the antenna beam projected onto the surface can be determined by its slope and intercept (Figure 2). The equation of this line is:

$$x = (\text{slope})\,y + (x \text{ axis intercept})$$

From Figure 2 it can be seen that the slope is the tangent of the drift angle. For the geometry in Figure 2

$$\text{slope} = \tan \phi$$

Note that the drift, $\phi$, is considered to be positive when the nose of the aircraft is to the left of the aircraft

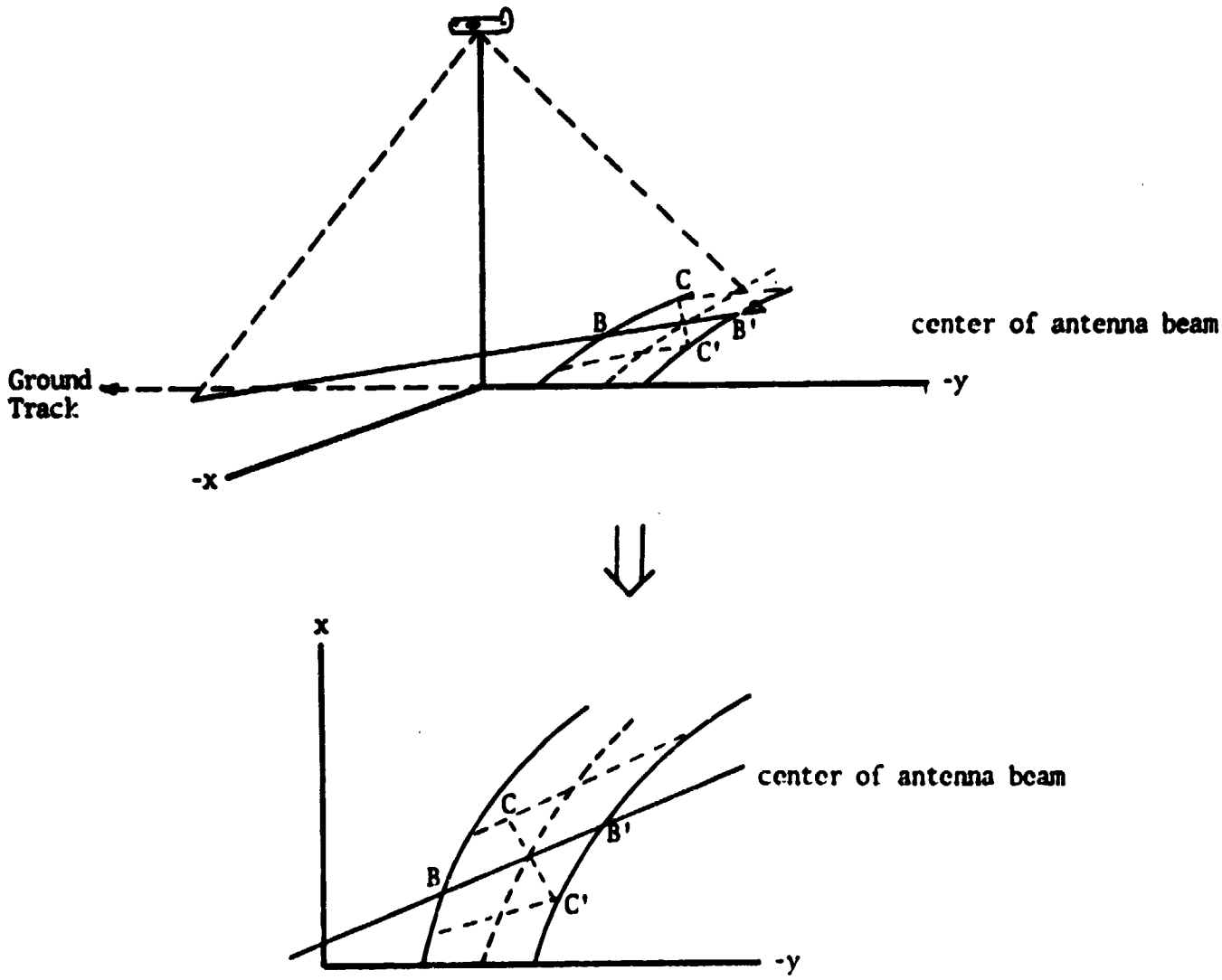


cell length: B to B'

cell width: C to C'

Approximate cell area: cell length x cell wid'

Figure 1. Definition of cell length and cell width.

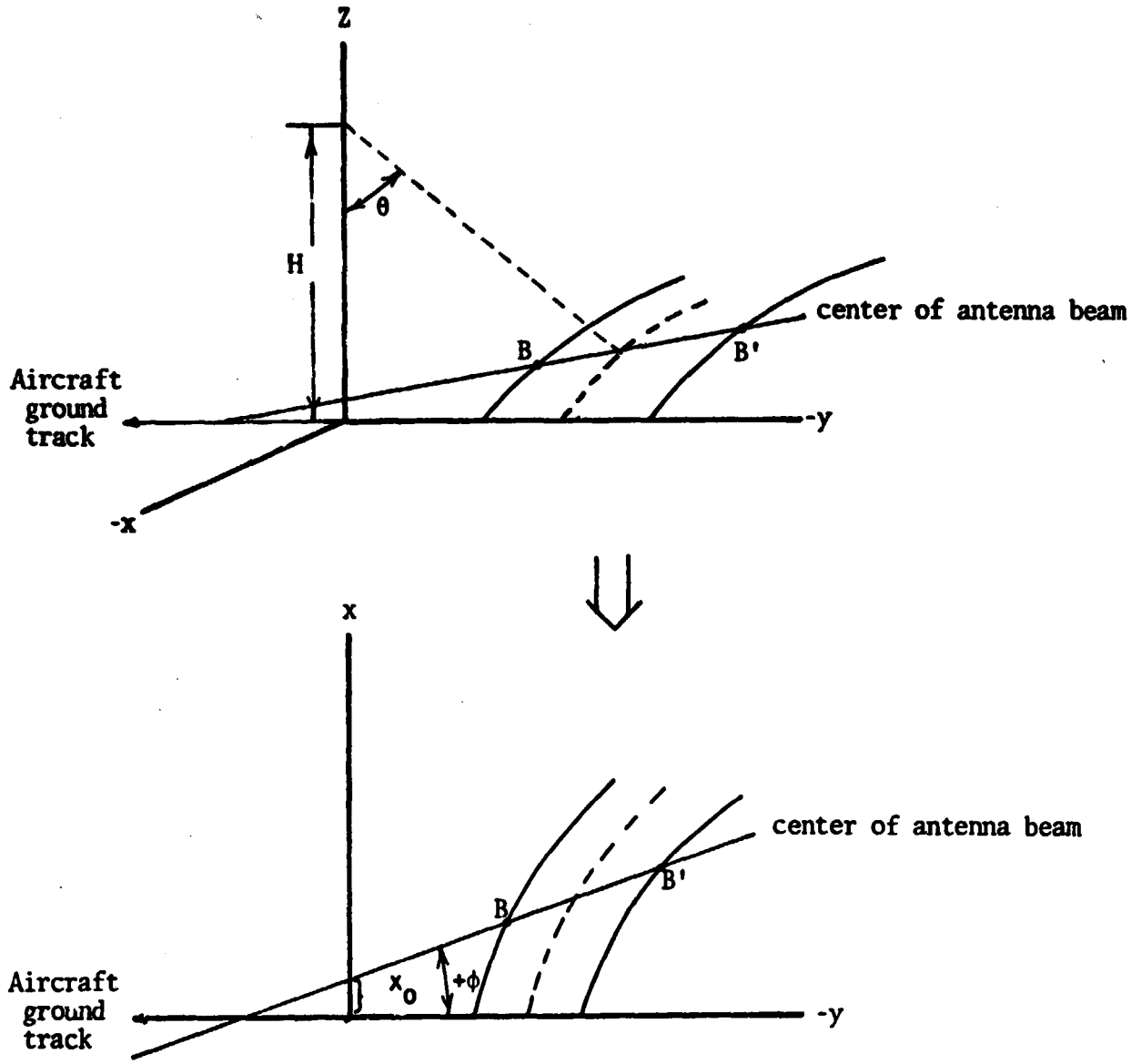


φ - drift angle (positive when aircraft nose is to left of ground track)

$x = (\text{slope})\ y + x_o$

Figure 2. Geometry describing projection of the center of the antenna beam onto the surface.

ground track. The x axis intercept, $x_o$, is given as

$$x_o = \frac{H \tan(-\psi)}{\cos\phi} = \frac{-H \tan\psi}{\cos\phi}$$

where the angle, $\psi$, is measured off of the z axis and orthogonal to the center line of the antenna. It is considered to be negative when the left wing goes low. The equation of the line defining the center of the antenna beam is now

$$x = \tan\phi \, y - \frac{H \tan\psi}{\cos\phi} \qquad (1)$$

The cell length is determined by computing the intersection of this line with the isodoppler lines that define the cell end boundaries. The equation defining the isodopplers is determined from the doppler equation

$$f_d = \frac{2\bar{v} \cdot \frac{\bar{r}}{|\bar{r}|}}{\lambda}$$

where $\bar{v}$ - the velocity vector (in the direction of the y axis

$\bar{r}$ - the range vector from the aircraft to the cell center (thus $\frac{\bar{r}}{|\bar{r}|}$ is a unit vector denoting the direction from the antenna to the cell center).

$f_d$ - doppler frequency

Now

$$f_d = \frac{2\bar{v}\cdot\bar{r}}{\lambda|\bar{r}|}$$

but from Figure 3

$$\bar{v}\cdot\bar{r} = |\bar{v}||\bar{r}|\cos\theta_{rv}$$

$$= |\bar{v}||\bar{r}|\cos(\theta' + \pi/2)$$

$$\bar{v}\cdot\bar{r} = |\bar{v}||\bar{r}|\sin\theta'$$

where $\theta_{rv}$ is the angle between the velocity vector and the range vector. Now

$$f_d = \frac{2|\bar{v}||\bar{r}|\sin\theta'}{\lambda|\bar{r}|}$$

Note that

$$|\bar{r}|\sin\theta' = -y$$

However, for small roll and drift angles

$$\sin\theta' \approx \sin\theta$$

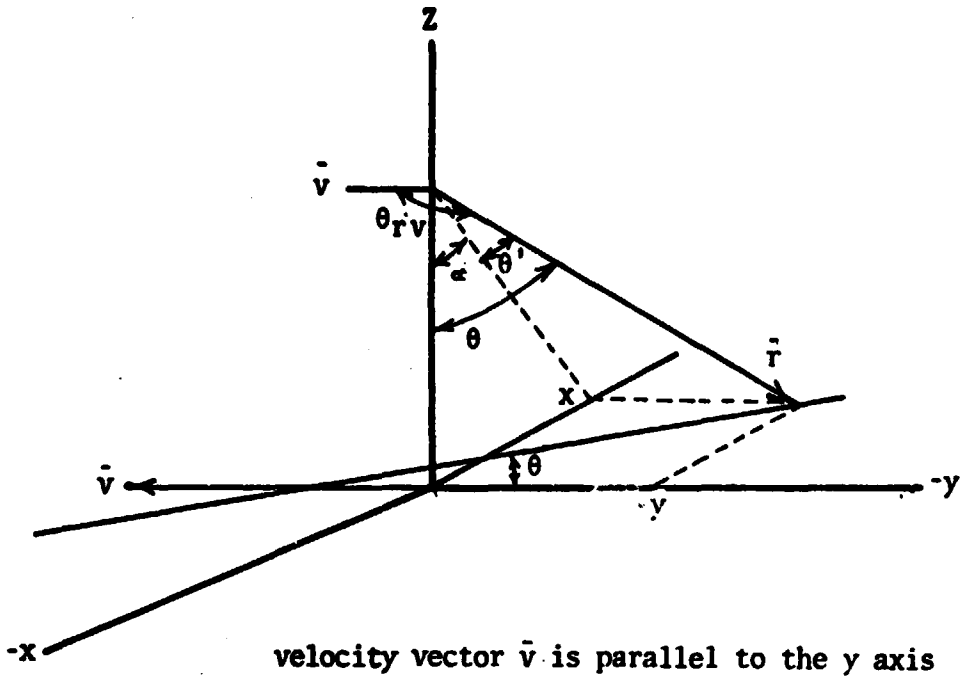


velocity vector $\bar{v}$ is parallel to the y axis

$$\sin\theta' = \frac{y}{\sqrt{x^2 + y^2 + H^2}}$$

and

$$\sin\theta = \frac{\sqrt{x^2 + y^2}}{\sqrt{x^2 + y^2 + H^2}}$$

It is an approximation to assume $\sin\theta' = \sin\theta$ if $\psi$ and $\phi$ are not zero.

Figure 3. Approximation involved in evaluations the doppler equation.

making this <u>assumption</u>, then

$$|\bar{r}| \sin\theta = -y$$

and

$$f_d = \frac{-2|\bar{v}|\,y}{\lambda|\bar{r}|}$$

Substituting for $|\bar{r}|$

$$f_d = \frac{-2|\bar{v}|\,y}{\lambda\sqrt{x^2+y^2+H^2}}$$

The factor k is constant for each incident angle.

$$\left(\frac{\sqrt{x^2+y^2+H^2}}{y}\right)^2 = \left(\frac{-2|\bar{v}|}{\lambda f_d}\right)^2 = k$$

$$\frac{y^2}{(k-1)H^2} - \frac{x^2}{H^2} = 1 \qquad (2)$$

The cell length can now be computed from (Figure 4).

$$\text{cell length} = \frac{y_2 - y_1}{\cos\phi} \qquad (3)$$

The y values are computed by solving for the intersection of the line defined by equation (1) and the hyperbolas defining the isodopplers, equation (2). Eliminating the variable x from these equations yields

$$\sqrt{y^2(k-1) - H^2} = \tan\phi\, y - \frac{H\tan\psi}{\cos\phi}$$

$$(k-1)y^2 - H^2 = \tan^2\phi\, y^2 - 2H\tan\phi\tan\psi\, y + \frac{H\tan\psi}{\cos\phi}$$

$$y^2\left[\tan^2\phi - (k-1)\right] - \left[2H\tan\phi\tan\psi\right]y + \left[\frac{H^2\tan^2\psi}{\cos^2\phi} + H^2\right] = 0$$

$$a y^2 + b y + c = 0$$

$$y = \frac{-b + \sqrt{b^2 - 4ac}}{2a}$$

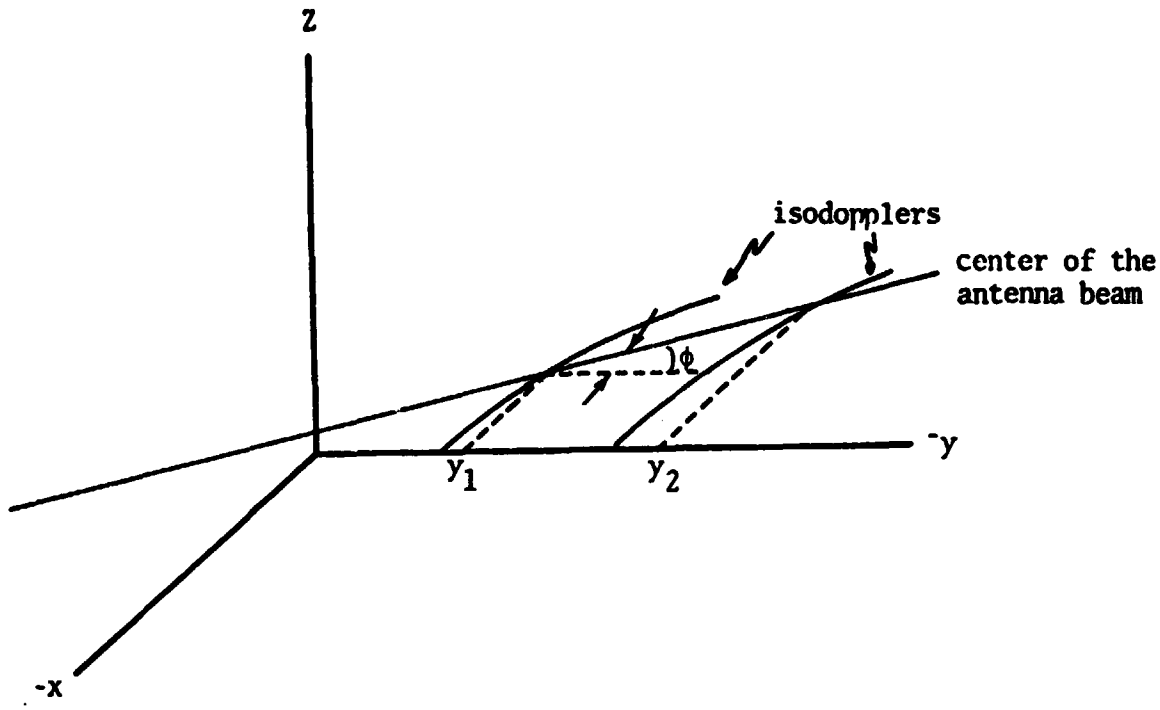


Figure 4. Cell length projection.

## CELL WIDTH

The cell width can be computed with the aid of Figure 5.

$$r = \frac{H}{\cos\theta}$$

$$W = 2r \tan \beta/2$$

$$W = 2 \frac{H \tan \beta/2}{\cos\theta}$$

The cell width projected onto the surface is

$$W' = \frac{2H \tan \beta/2}{\cos\theta \cos\psi} \tag{4}$$

## AREA COMPUTATION

The approximate cell area is computed by simply multiplying equation (3) by equation (4).

$$\text{Area} = W' \left( \frac{y_2 - y_1}{\cos\phi} \right)$$

$$\text{Area} = \frac{2H \tan \beta/2}{\cos\theta \cos\psi} \left( \frac{y_2 - y_1}{\cos\phi} \right) \tag{5}$$

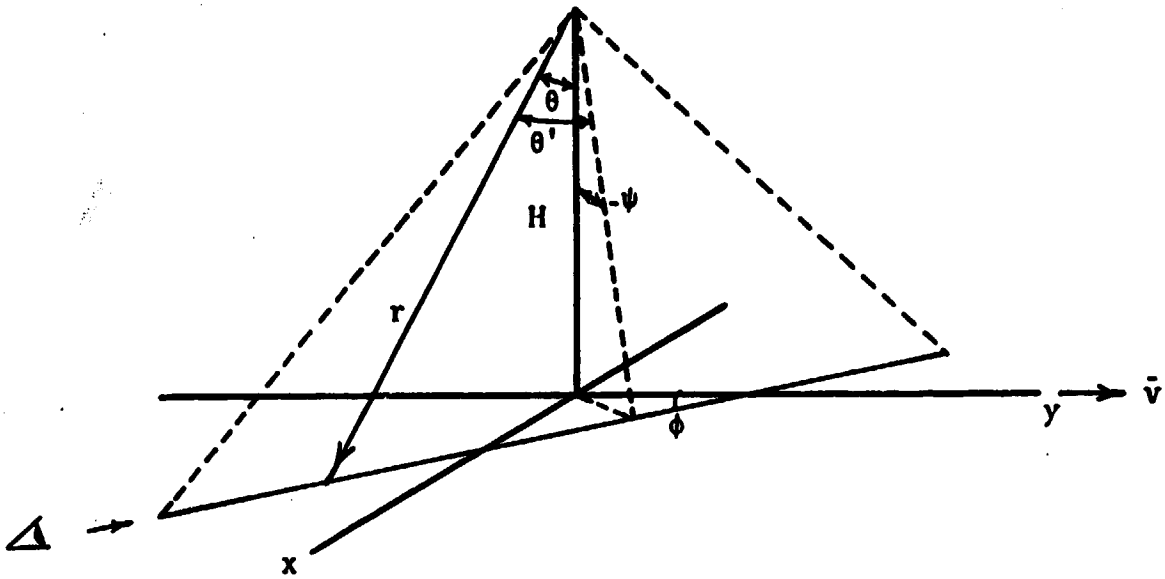


Looking down the center line of the antenna.

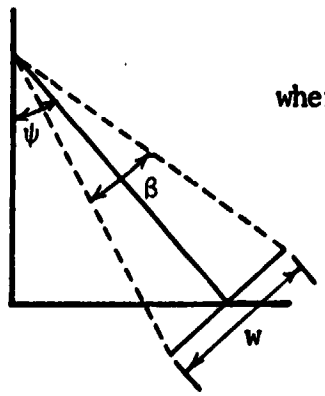


where β is the beamwidth

Figure 5. Cell width geometry.

## REDEFINITION OF ROLL ANGLE

If it is determined that the roll angle is measured off the true nadir in the x z plane instead of orthogonal to the centerline of the antenna beam as assumed above, equation (5) can still be used to compute the area. However, the roll angle $\psi$ used in the equations must be computed in the following manner:

$$\psi = \tan^{-1}(\tan\psi_{xz} \cos\phi)$$

where $\psi$ is the angle in equations (1) through (5) above, and $\psi'$ is the roll angle obtained from the NERDAS.

## COMPARISON TO NASA EQUATION

The quadratic equation used to solve for $y_2$ and $y_1$ is

$$y^2[\tan^2\phi - (k-1)] - [2H\tan\phi\tan\psi]y + \left[\frac{H^2\tan^2\psi}{\cos^2\phi} + H^2\right] = 0 \qquad (6)$$

where

$$k = \left(\frac{2|\bar{v}|}{f_d\lambda}\right)^2$$

It can be shown that this equation is identical to the version that is contained in the NASA ESD program. The quadratic in the ESD equation is



1NH

$$y^2[\tan^2\theta \tan^2\phi - 1] + [2H \tan\phi \tan\psi \tan^2\theta]y$$
$$+ H^2 \tan^2\theta \left[\frac{\tan^2\psi}{\cos^2\phi} + 1\right] = 0$$

The constant k is obtained from

$$f_d = \frac{2|\bar{v}| \sin\theta}{\lambda}$$

$$\left(\frac{1}{\sin\theta}\right)^2 = \left(\frac{2|\bar{v}|}{f_d \lambda}\right)^2 = k$$

Substituting this into equation (6) gives

$$y^2\left[\tan^2\phi - \left(\frac{1}{\sin^2\theta} - 1\right)\right] - [2H\tan\phi\tan\psi]y + \left[\frac{H^2\tan^2\psi}{\cos^2\phi} + H^2\right] = 0$$

$$y^2\left[\tan^2\phi - \left(\frac{1-\sin^2\theta}{\sin^2\theta}\right)\right] - [2H\tan\phi\tan\psi]y + H^2\left[\frac{\tan^2\psi}{\cos^2\phi} + 1\right] = 0$$

$$y^2\left[\tan^2\phi - \frac{\cos^2\theta}{\sin^2\theta}\right] - [2H\tan\phi\tan\psi]y + H^2\left[\frac{\tan^2\psi}{\cos^2\phi} + 1\right] = 0$$

$$y^2\left[\tan^2\phi - \frac{1}{\tan^2\theta}\right] - [2H\tan\phi\tan\psi]y + H^2\left[\frac{\tan^2\psi}{\cos^2\phi} + 1\right] = 0$$

$$y^2[\tan^2\phi\tan^2\theta - 1] - [2H\tan\phi\tan\psi\tan^2\theta]y + H^2\tan^2\theta\left[\frac{\tan^2\psi}{\cos^2\phi} + 1\right] = 0$$

This equation can be seen to be identical to the quadratic that ESD uses.

## CONCLUSION

The equations developed in this document are identical to those developed by Schell in Technical Memorandum RSC-119 [1]. A question has recently been raised by NASA ESD concerning the reference for the roll angle that is measured by the NERDAS. It has been shown that the equations developed in this document can be used for either roll angle reference with a very simple roll angle adjustment.

The equations developed by Schell [1] are used in the real time 13.3 GHz radar processor and have always been used in the TAMU software processing programs. The only modification to the TAMU area computation that has ever been made is a change in the sign on the radical associated with the solution to the quadratic equation.

## REFERENCES


[1] Schell, J. A., "Ground Cell Area Calculation For a Radar Scatterometer Under Aircraft Pertubation," Technical Memorandum RSC-119, Remote Sensing Center, Texas A&M University.

[2] _____, "An Airborne Radar Scatterometer Signal Processing System," Progress Report RSC 3182-1, Remote Sensing Center, Texas A&M University, February - April, 1975.

[3] Clark, B. V. and R. W. Newton, "Comparison of Scatterometer Resolution Cell Area Approximations", Technical Memorandum RSC-159, Remote Sensing Center, Texas A&M University, March 1979.