N O T I C E

THIS DOCUMENT HAS BEEN REPRODUCED FROM MICROFICHE. ALTHOUGH IT IS RECOGNIZED THAT CERTAIN PORTIONS ARE ILLEGIBLE, IT IS BEING RELEASED IN THE INTEREST OF MAKING AVAILABLE AS MUCH INFORMATION AS POSSIBLE

DOE/NASA CONTRACTOR REPORT

DOE/NASA CR-161549

SOLAR HEATING SYSTEM AT QUITMAN COUNTY BANK, MARKS, MISSISSIPPI - FINAL REPORT

Prepared from documents furnished by

First National Bank of Clarksdale
P. O. Box 220
Clarksdale, Mississippi 38614

Under DOE Contract EM-78-F-01-5199

Monitored by

National Aeronautics and Space Administration
George C. Marshall Space Flight Center, Alabama 35812

For the U. S. Department of Energy

RECEIVED
NASA STI FACILITY
ACCESS DEPT.

(NASA-CR-161549) SOLAR HEATING SYSTEM AT QUITMAN COUNTY BANK, MARKS, MISSISSIPPI Final Report (First National Bank of Clarksdale) 119 p HC A06/MF A01 CSCL 10B

N80-33858

Unclas
G3/44 28843

U.S. Department of Energy

Solar Energy

NOTICE

This report was prepared to document work sponsored by the United States Government. Neither the United States nor its agents the United States Department of Energy, the United States National Aeronautics and Space Administration, nor any federal employees, nor any of their contractors, subcontractors or their employees, make any warranty, express or implied, or assume any legal liability or responsibility for the accuracy, completeness, or usefulness of any information, apparatus, product or process disclosed, or represent that its use would not infringe privately owned rights.

TECHNICAL REPORT STANDARD TITLE PAGE

1. REPORT NO. DOE/NASA CR-161549	2. GOVERNMENT ACCESSION NO.	3. RECIPIENT'S CATALOG NO.
4. TITLE AND SUBTITLE Solar Heating System at Quitman County Bank, Marks, Mississippi - Final Report		5. REPORT DATE June 1980
		6. PERFORMING ORGANIZATION CODE
7. AUTHOR(S)		8. PERFORMING ORGANIZATION REPORT #
9. PERFORMING ORGANIZATION NAME AND ADDRESS First National Bank of Clarksdale P. O. Box 220 Clarksdale, Mississippi 38614		10. WORK UNIT NO.
		11. CONTRACT OR GRANT NO. EM-78-F-01-5199
12. SPONSORING AGENCY NAME AND ADDRESS U.S. Department of Energy, Conservation and Solar Energy Washington, DC 20585		13. TYPE OF REPORT & PERIOD COVERED Contractor Report - Final
		14. SPONSORING AGENCY CODE

15. SUPPLEMENTARY NOTES

This work was done under the technical management of Mr. J. D. Hankins, George C. Marshall Space Flight Center, Alabama 35812.

16. ABSTRACT

This document provides information on the Solar Energy Heating System installed in a single story wood frame, cedar exterior, sloped roof building, the Quitman County Bank, a branch of the First National Bank of Clarksdale, Mississippi. It is the first solar system in the geographical area and has promoted much interest. The system has on-site temperature and power measurements readouts. The 468 square feet of Solaron air flat plate collectors provide for 2,000 square feet of space heating, an estimated 60 percent of the heating load. Solar heated air is distributed to the 235 cubic foot rock storage box or to the load (space heating) by a 960 cubic feet per minute air handler unit. A 7.5 ton Carrier air-to-air heat pump with 15 kilowatts of electric booster strips serve as a back-up (auxiliary) to the solar system. Motorized dampers control the direction of airflow and back draft dampers prevent thermal siphoning of conditioned air. The system was turned on in September, 1979, and acceptance testing completed in February, 1980. This is a Pon Cycle 3 Project with the Government sharing $13,445.00 of the $24,921 Solar Energy System installation cost.

17. KEY WORDS	18. DISTRIBUTION STATEMENT Unclassified-Unlimited UC59a WILLIAM A BROOKSBANK, JR. Mgr., Solar Energy Applications Projects		
19. SECURITY CLASSIF. (of this report) Unclassified	20. SECURITY CLASSIF. (of this page) Unclassified	21. NO. OF PAGES 121	22. PRICE NTIS

MSFC - Form 3292 (Rev. December 1972)

For sale by National Technical Information Service, Springfield, Virginia 22151

TABLE OF CONTENTS

Page

SOLAR SYSTEM DESCRIPTION..... 1

DESIGN PHILOSOPHY..... 3

OPERATION OF THE SYSTEM..... 4

PROBLEMS ENCOUNTERED AND SOLUTIONS..... 5

COSTS..... 5

ACCEPTANCE TEST RESULTS..... 6

COLLECTOR TECHNICAL DATA..... 8

COLLECTOR INSTALLATION MANUAL.....13

CONTROLLER INSTALLATION MANUAL.....30

AIR HANDLER INSTALLATION MANUAL.....40

HEAT STORAGE INSTALLATION MANUAL.....54

DESCRIPTION.....59

GENERAL NOTES.....60

HEAT STORAGE UNIT AND ROCK SIZING.....62

HEAT STORAGE UNIT - CONCRETE CONSTRUCTION.....64

HEAT STORAGE UNIT - WOOD CONSTRUCTION.....66

HEAT STORAGE UNIT - ATTACHMENT DETAILS.....69

OPERATIONAL AIR HANDLER AND DUCT LOCATIONS.....70

METAL LATH SAMPLE.....71

BOND BEAM BLOCK AND TRANSITE DUCT DETAILS.....72

ROCK AND SIZING METHOD.....73

HEAT STORAGE UNIT CONSTRUCTION CHECKLIST.....74

PRECEDING PAGE BLANK NOT FILMED

TABLE OF CONTENTS (Continued)

Page

OWNER'S MANUAL.....75

A DESCRIPTION OF YOUR SOLARON SYSTEM.....78

OVERVIEW OF SYSTEM.....78

GENERAL SYSTEM DESCRIPTION.....79

COLLECTORS.....83

HEAT STORAGE.....84

SOLARON AIR HANDLING UNIT.....86

GRAVITY-OPERATED DAMPERS.....86

DOMESTIC WATER PREHEATER.....86

SYSTEM CONTROLS.....87

AUXILIARY HEATING SYSTEM.....87

HOW TO OPERATE YOUR SOLARON SYSTEM.....91

ROUTINE MAINTENANCE.....93

STEPS TO FOLLOW TO OBTAIN MAXIMUM PERFORMANCE FROM YOUR SOLARON SYSTEM...94

IF YOUR SOLARON SYSTEM DOES NOT WORK.....96

FAN COIL UNIT.....97

HEAT PUMP UNIT.....102

SYSTEM DRAWINGS.....111

SOLAR SYSTEM DESCRIPTION

Quitman County Bank

Marks, Mississippi, 38646

Application	Solar heating
System Type	Active hot air
Collector Type	Flat plate air
Collector Manufacturer	Solaron Corporation
Collector Area	468 square feet
Storage Capacity	285 cubic feet
Building Load	53.75×10^6 BTU/year without any credit for internal load
BTU's Produced	34.26×10^6 BTU/year
Building Owner	First National Bank of Clarksdale Clarksdale, Mississippi
Building Name	Quitman County Bank Marks, Mississippi
Architect And Engineer	Brewer, Godbold and Associates, Ltd. Clarksdale, Mississippi
Designer	Alfred M. Alperin A. T. Distributors Memphis, Tennessee
Mechanical Contractor	Temperature Control, Co. Clarksdale, Mississippi
General Contractor	Johnson Lumber, Co. Clarksdale, Mississippi

This new building is a full service branch of the Clarksdale Bank located on a corner site facing State Highway No. 3 in the industrial area of the town. It is designed as a modern contemporary structure with the roof supporting the solar collectors facing 15 1/2 degrees west of south from due south.

The structure is on a concrete slab with heated space of approximately 2150 square feet. Perimeter walls are wood siding, 3/4 inch insulating sheathing, 4 1/2 inches standard space with R-19 batt insulation, 5/8 gypsum board on 2x6 strips. The truss roof is covered with a metal deck on 5/8 inch plywood, with R-38 batt insulation between the trusses. An acoustical ceiling is suspended below except in the vaulted area which has a 5/8 inch gypsum board ceiling. All glass is insulating type.

The entire structure is designed to minimize heat loss and heat gain.

Heat storage is within a concrete vessel built as part of the structure, insulated internally with 1 1/2 inch rigid insulation board, six pound density fiberglass. This storage facility is located below the collectors on the building concrete slab adjacent to the floor level mechanical room.

Included in the mechanical system is a Carrier split system heat pump heating and cooling unit, with the air handling unit in the mechanical room and the outdoor unit, connected by copper refrigerant pipes to the indoor unit, located on the west side of the building.

Design Philosophy

As heating system in the area are generally of the hot air type distributed via a ducted system with cooling, most of the installing mechanics are trained to install sheet metal. Therefore, a hot air solar system seemed a natural for this building.

Flat plate air collectors, more particularly, Solaron Corporation collectors were chosen by the designer, with the Architects' permission, for the following reasons:

(a) The designer has been trained in Solaron's design and installation techniques.

(b) The designer honestly believes the end user, in this case the bank, is best served by solar air systems with a quality collector, properly installed. The problems of maintenance, deterioration, freeze-up, stagnation and control failure are minimized.

(c) In the opinion of the designer, equal or more BTU's are delivered to the space by Solaron air systems. They usually begin collecting usable energy earlier in the day and can continue doing so until later in the day. Heated air is taken directly into the space with no additional heat transfer loss, and stratification of usable heat is better in rocks than in liquid storage.

(d) As there was no need for high temperature, there was no consideration of concentrating or tracking collectors.

Solar hot water was not included as the bank uses so little hot water, it was not considered economically feasible.

Operation Of The System

A Solaron air system has a special air handling unit to move air over the collectors and into and out of the rock storage, with connection to the conventional heating and cooling air handling unit and to the air duct distribution system. The motor has Class B insulation on the windings to prevent deterioration as hot air passes over it. The heat of this motor is added to the heat delivered to the system.

Four motorized, special low leakage dampers and two gravity fabric dampers are also part of the system.

The system is designed to be automatically controlled by a Solaron-provided solid state controller with three thermistors - one located in the collectors, one in the rock box top plenum, one in the return air duct from the heated space. A two stage heating, one stage cooling thermostat located in the conditioned space controls the operation.

Modes Of Operation Are:

1) Heating the space from the collectors
2) Storing heat in the rock storage
3) Heating from storage
4) Storing heat in the rock storage and air conditioning the conditioned space
5) Solar system off while providing air conditioning to the conditioned space
6) Solar system off while providing conventional heating to the conditioned space

If solar heat is insufficient to maintain space temperature, the backup heat pump system can come into operation in conjunction with modes one and three, thereby taking advantage of any solar BTU's available for the space.

As a two stage heating thermostat controls the room temperature, backup heat can only be energized by the thermostat's second stage. If the heat pump cannot keep up, then electric resistance heat can come into operation being controlled by outdoor-indoor thermostats. A time clock is provided to operate night set-back.

The building was completed in the fall of 1979, and the solar system operated during the winter of 79-80.

Included on the wall near the controlling thermostats is a 4 position temperature indicator, with 4 probes and a manual rotary switch. Probes are located to indicate the temperature of the air off collector, the top of the rocks of the storage container, the outside temperature and the air return to the collectors.

Problems Encountered And Solutions

(A) At the design review with DOE representatives, after much discussion as to how to keep any heat gain that might penetrate the back side of the collectors and be detrimental to the cooling operation. It was decided that a theromostatically controlled exhaust fan will be installed to operate when the attic area reaches 95°F and the outside temperature is above 70°F. This proved to be a correct judgement, as the attic would have been extremely warm in summer.

(B) Prior to collector installation, a training session was held with the installers at their shop, so the installation of the collectors went smoothly.

(C) It was decided not to install a 3KW heater over the entrance area, due to the inaccesibility for service.

(D) On start up it was discovered that several dampers were hooked up backwards. One damper was hanging-up and would not function properly. These were corrected.

(E) A switch over themostat to automatically cut off the solar system entirely at 70°F outside was added to the controls.

(F) Originally it was planned that cooling and backup heat would be provided by a single packaged rooftop heat pump unit. However, service and accessibility, as well as a perfectly good solar air handlers already available, were considered, and instead, an evaporator coil with the previously planned heat strip was installed in the dust system with the heat pump condensing unit (outdoor section) installed remote on the west side of the building.

(G) The need for a better mechanical check of pulleys, beaming brackets, belts, damper linkage, air leakage seems to be in order, as some of this was service problem after start up.

Costs

Prior to submission of the application to DOE, a substantial set of mechanical plans of the solar system was developed and priced by Temperature Control, Inc.

The cost of the system, including architectural and engineering fees, is approximately 24,920.83.

ACCEPTANCE TEST RESULTS

S.O.L.A.R. 1900.00.004W
Replaces 1900.00.003W

SYSTEM START-UP

PROJECT NAME: Quitman City Bank DATE: _____

PROJECT TYPE: RES'L _____ COMM'L X IND'L _____

AGRI _____ OTHER: _____

LOCATION: _____

COLLECTOR ARRAY: 2 HIGH X 12 WIDE = 468 SQ. FT.

SERVICEMAN: _____

COMPANY: _____

PHONE: ( )

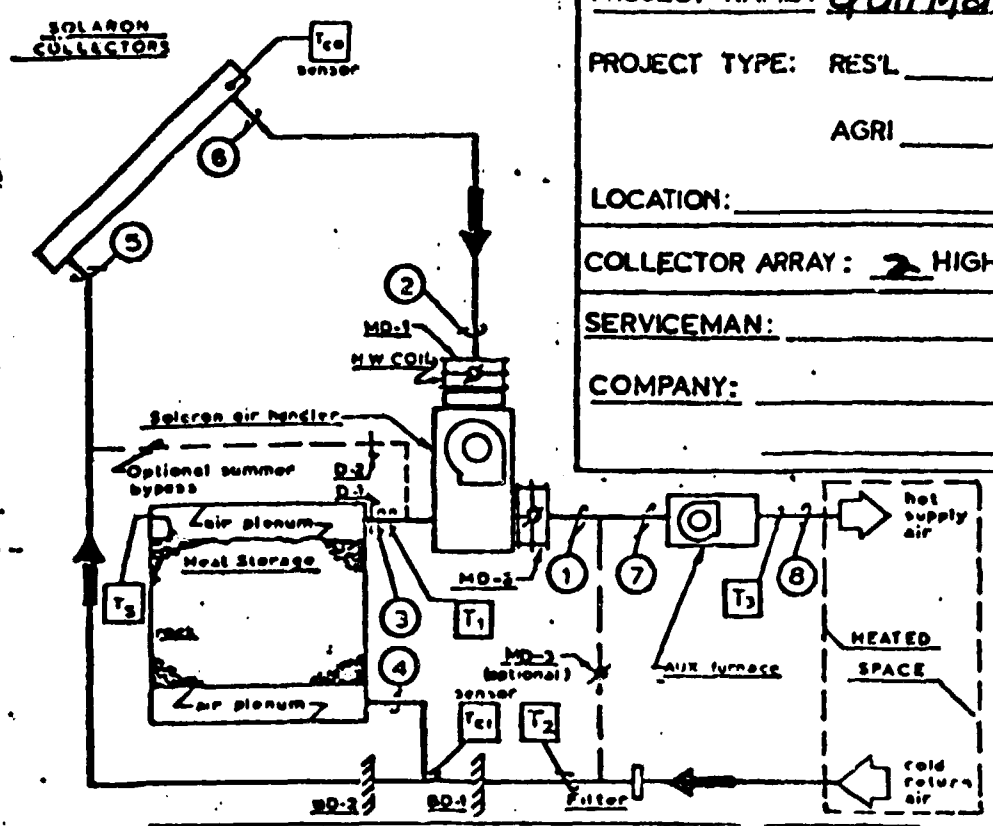

SOLAR HEATING FLOW SCHEMATIC

	AIR HANDLER SOLAR	AIR HANDLER AUX
Design CFM	960	3000
Design Ext SP	0.63	.6
Fan RPM	1030	700
HP	1/3	
Motor RPM	1750	945
Volt	115	230
Phase	1	1
FLA	6.0	8.0
SF	1.25	1.15
SFA	7.5	9.2
Insul. Class	B	B
Motor Mfg	GE	A.O.S.
Model No.	M7085	

SEQUENCE OF OPERATIONS

O = open, C = closed, P.O. = partial open

MODE	MD-4	MD-2	BD-1	BD-2	MD-3	D-1/D-2	pump	solaron air handler	aux. furnace fan	aux. furnace heater
HEATING FROM COLLECTOR	O	O	O	O	PO	O/C	ON	ON	ON	OFF
HEATING FROM STORAGE	C	O	O	C	P.O.	O/C	OFF	OFF	ON	OFF
STORING HEAT	O	C	C	O	O	O/C	ON	ON	OFF	OFF
*HEATING WITH AUX. FURNACE	C	O	O	C	PO	O/C	OFF	OFF	ON	ON
WATER HEATING (SUMMER)	O	C	C	O	O	C/O	ON	ON	OFF	OFF

*For Heat Pump Systems: MD-2 Closed, MD-3 Open, BD-1 Closed

$$T_3 = \frac{T_1(CFM_{sol}) + T_2(CFM_{aux.} - CFM_{sol})}{CFM_{aux}}$$

T_1 = 130°F

T_2 = 68°F

T_3 = 117°F

TEMPERATURE & STATIC PRESSURE MEASUREMENTS

STORING HEAT			Motor Amps	HEATING FROM STORAGE				HEATING FROM COLLECTOR			Motor Amp
POINT	°F	STATIC PRESSURE	S.P. DIFF.	POINT	°F	STATIC PRESSURE	S.P. DIFF.	POINT	°F	STATIC PRESSURE	S.P. DIFF.
1		0.00		1	—	0.00		1	—	-.18"	0.74
2	139	-.33	0.69	2	—			2	—	-.96	
3	133	+.36	0.19	3	130	-.30	0.14	3	—	-.18	0.04
4	68	+.15		4	68°	-.16		4	—	-.22	
5	66	+.07	0.31	5	—	-0.01	0.0	5	66	-.32	0.42
6	142	-.24		6	—	-0.01		6	122	-.74	
7				7	—	-.41	.60	7		-.21	0.48
8				8	117	+.19		8		-.27	

COLLECTOR TECHNICAL DATA

SOLARON
SOLAR ENERGY SYSTEMS
Profit from the sun

TECHNICAL DATA
Series 2000
Air Type Solar Collector

PATENTS PENDING

ORIGINAL PAGE IS OF POOR QUALITY

The Solaron series 2000 flat plate air type collector represents the most advanced technology and manufacturing know-how available today in the solar heating field. The collector is based on over thirty-years of research and testing and has proven highly efficient, reliable and maintenance free.

The collectors are completely factory preassembled to minimize field installation time and assure uniform quality and performance. The exclusive port and manifold system allows the collectors to be simply butted together and bolted in place. No field fittings are required between collectors.

The Solaron series 2000 collector is universal in application. Substantial energy savings can be realized in commercial, industrial and residential applications such as:

- MAKEUP AND FORCED AIR HEATING
- HYDRONIC SPACE HEATING
- DOMESTIC HOT WATER HEATING
- PROCESS HOT WATER APPLICATIONS
- PROCESS HOT AIR DRYING APPLICATIONS

The Solaron System can be used where application temperatures can be satisfied directly by the collectors as well as where the collectors are used to preheat air or water for high temperature applications.

The Solaron series 2000 collector conforms to the interim performance standards established by the Energy Research and Development Administration for solar collectors. These standards include:

- RESISTANCE TO HAIL, WIND FLUTTERING AND WIND LOAD.
- FREEDOM FROM FREEZING, CORROSION, AND OUTGASSING.
- RESISTANCE TO THERMAL AND SOLAR DEGRADATION.
- CONFORMITY TO NATIONAL SAFETY AND FIRE CODES.

FEATURES

- The Solaron series 2000 air type collector can be used in hydronic applications through the use of a high efficiency air to water heat exchanger. Since the collector uses air as the transfer medium, costly field piping, maintenance and wear are reduced or eliminated.
- Attractive appearance allows for architecturally pleasing applications, including construction of entire roofs and wall sections with solar panels.
- Factory preassembly includes insulation, manifolding and glazing to eliminate field assembly.
- Simple installation system includes all hold down hardware and cap strip necessary for a complete installation. Perimeter flashing, typically field measured is provided by the builder.

CONSTRUCTION

The series 2000 collector module, designed for high efficiency and ease of installation, is constructed of the following materials:

PAN - 20 gauge steel, fully insulated with 3-3/4" fiberglass batt. Painted external surfaces.

GLAZING - Two 1/8" sealed special low iron tempered glass panels with long life EPDM perimeter gasket. Plates can be easily removed for service or replacement.

ABSORBER - 26 gauge steel with porcelain enamel coating.

CAP STRIP - Painted steel. Designed to assure weather seal between modules.

CONNECTION PORTS - Unique flange configuration permits tight air seal automatically as modules are installed.

PERFORMANCE

EFFICIENCY - collector efficiency is as high as 84.5% as a function of outlet minus ambient temperature over solar insolation. Where $T_{out} - T_{amb}$ equals 120° and insolation equals 300 BTU's per hour per square foot, a typical operating environment, the Solaron series 2000 collector efficiency exceeds that of flat plate liquid type collector.

REFLECTANCE - the total reflectance of the absorber surface averages only about 5%.

COVER TRANSMITTANCE - the transmittance of the two plate, low iron tempered glass cover is 80 percent from a 0 to 48 degree angle of solar incidence.

HEAT DELIVERY - the excellent heat delivery characteristics of the Solaron series 2000 collector are shown on Figure 3.

SOLARON COLLECTOR PANEL DETAILS

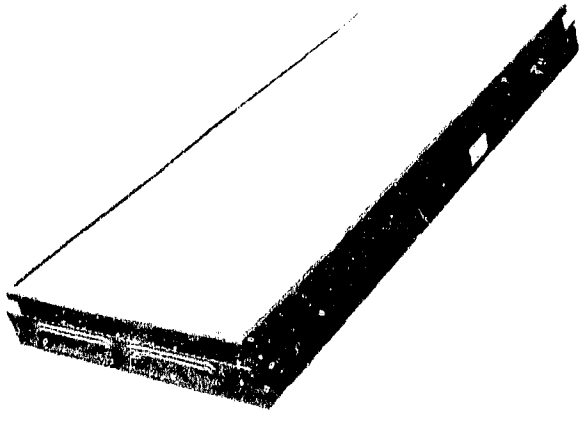

COLLECTOR PANEL

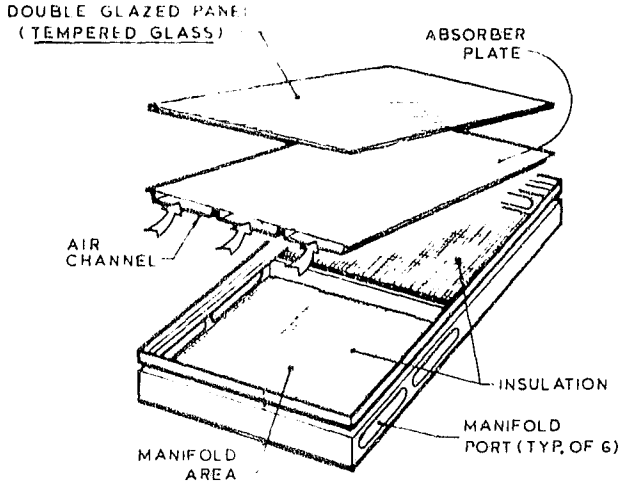

PANEL DIMENSIONS
3' 0"W x 6'-6"L x 7 1/4 H

NOTE: AIR FLOWS THRU THE CHANNELS BENEATH THE ABSORBER PLATE

NOTE

THE SERIES 2000 COLLECTOR IS AVAILABLE IN 4 MODELS:

2001 - Std. for 2 panels HIGH

2002 - Special order for ANY Array

2003 - Std. for 1 panel HIGH

2004 Center panel of 3 HIGH Array

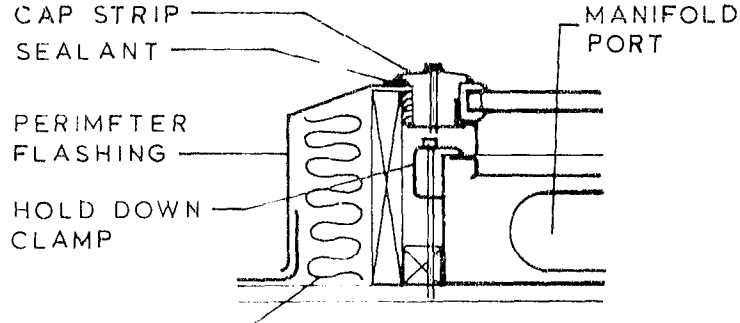

EXTERIOR MOUNTING SYSTEM

2003

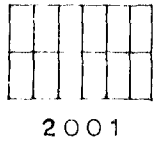

2001

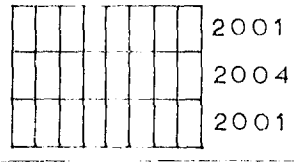

COLLECTOR PANELS MAY ALSO BE GROUPED IN HORIZONTAL CONFIGURATION

The Solaron series 2000 collector is flexible in application. The modules can be installed on a roof section, wall section or free standing roof frame.

The collectors are installed as shown in the mounting system details above. Return and supply air is provided by simply installing a standard starting collar on the bottom of the collector anywhere within the 29" x 36" manifold area, thus collars can easily be located to clear roof trusses or wall studs. Perimeter flashing is field measured and installed to complete the system.

Other product information:

COLLECTOR WEIGHT - 153 pounds

INSTALLED DIMENSIONS - 36" x 78", center to center

PORT NET FREE AREA - 26.7 square inches each

PORT END CAPS & PORT GASKETS - provided by Solaron as required

MEASURED*
COLLECTOR PERFORMANCE DATA

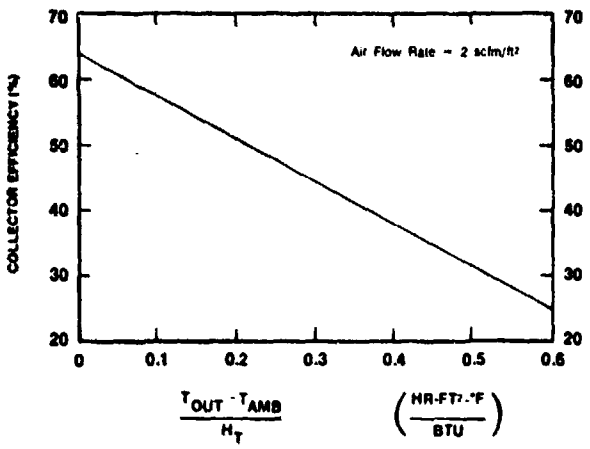

A—Collector efficiency as a function of outlet minus ambient temperature over insolation.

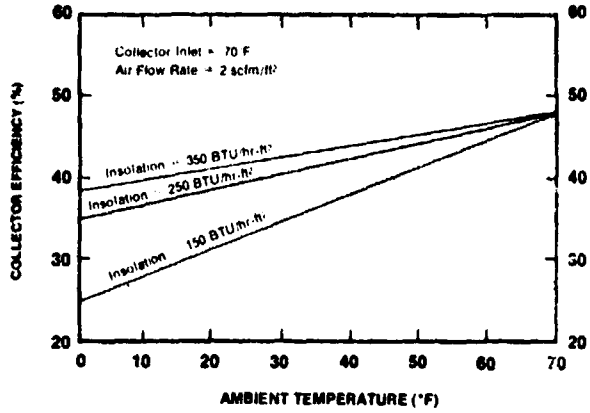

B—Collector efficiency as function of outdoor temperature for various solar inputs.

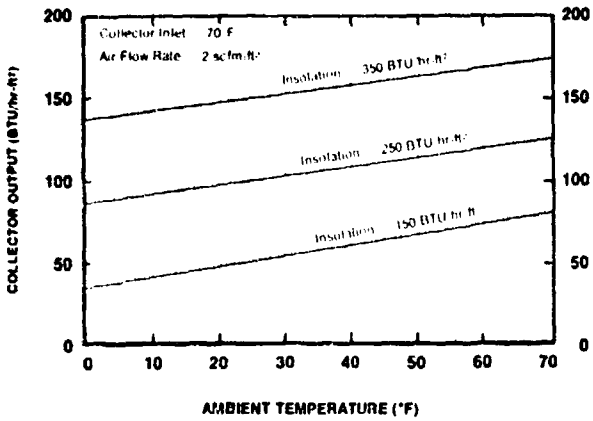

C—Collector heat delivery as a function of outdoor temperature for various solar inputs.

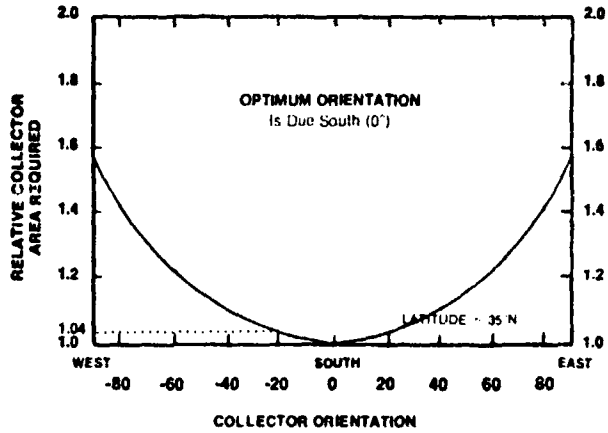

D—Effect of collector orientation on total system performance of a typical installation at 35° N latitude. *(J. D. Balcomb, J. C. Hedstrom, B. T. Rogers "Design Considerations of Air Cooled Collector/Rock-Bin Storage Solar Heating Systems," presented at 1975 ISES Los Angeles Meeting, Aug. 1975)*

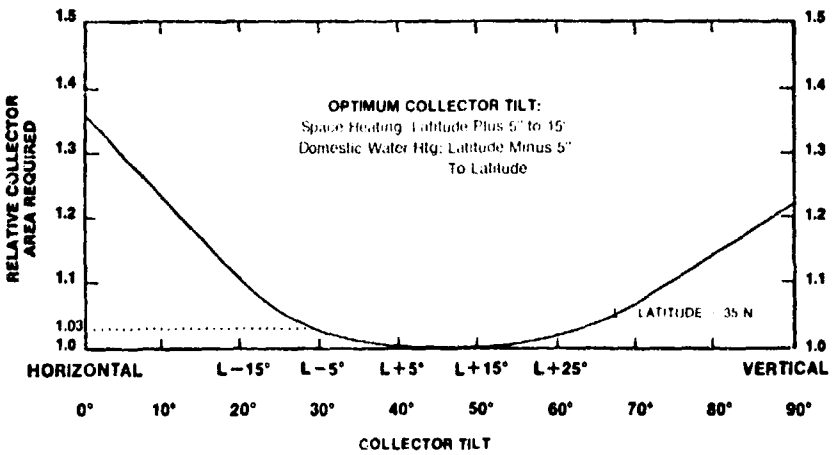

E—Effect of collector tilt on total system performance for a typical installation at 35° N latitude *(J. D. Balcomb, J. C. Hedstrom, B. T. Rogers, "Design Considerations of Air Cooled Collector/Rock-Bin Storage Solar Heating Systems," presented at 1975 ISES Los Angeles Meeting, Aug. 1975)*

CORRECTIONS FOR NON-OPTIMUM ORIENTATION & TILT

Example: Project at 40° N. Latitude, 500 Ft.² Coll. Area

1. If Orientation is 20° to the West:
The relative collector area required to provide the same annual fuel savings as a system at due South is approximately 1.04 times the calculated collector area. Therefore, if the calculated collector area is 500 Ft.² at due South, (1.04) (500) = 520 Ft.², would be required at 20° West (or 500 Ft.² could be used with the understanding that there will be a 4% loss in performance from the optimum due South.)

2. The optimum collector tilt would be 45° to 55° (i.e. L+5° to L+15°)
If the collectors were at a tilt of 35°(i.e. L-5) the relative collector area required would be 1.03X500 Ft.² = 515 Ft.². If both conditions exist (i.e. 20° West & 35° tilt) the correction would be (1.04) (1.03) (500) = 535.6 Ft.²

*Measured according to the guidelines set forth in ASHRAE proposed standard 93-P (Jan. 15, 1977) "Methods of Testing to Determine the Thermal Performance of Solar Collectors".

TYPICAL COLLECTOR INSTALLATION

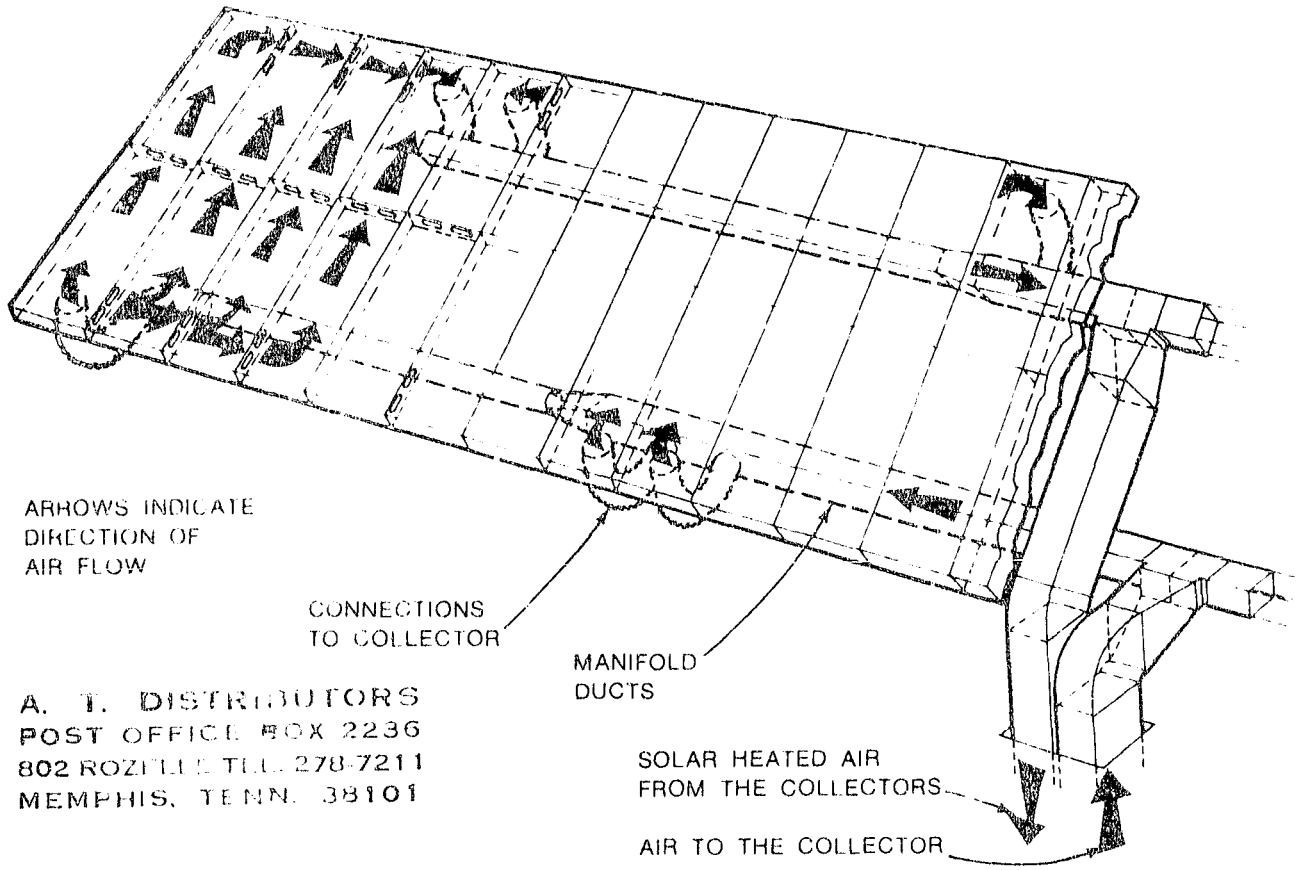

A. T. DISTRIBUTORS
POST OFFICE BOX 2236
802 ROZELLE TEL. 278-7211
MEMPHIS, TENN. 38101

The Solaron series 2000 solar collector can be installed in either a horizontal or vertical position. Installation can be efficiently accomplished by a two-man crew. No special tools or installation techniques are required.

The optimal air flow rate through the collector is 2 SCFM/ft². The design static pressure is 0.25" when the collectors are ducted as shown above.

On a special order basis, Solaron can provide collectors with precut manifold openings and manifold ports omitted where specified to further reduce field installation time.

Solaron Corporation provides mechanical engineering and field services to assist the local engineer and HVAC contractor in design and installation.

For additional information on the Solaron collector and related Air Handling and Automatic Control systems, contact Solaron Corporation Marketing Services.

SOLARON CORPORATION, MARKETING SERVICES
300 GALLERIA TOWER, 720 SO. COLORADO BLVD., DENVER, COLORADO 80222
303-759-0101

20: 1
Copyright 1976 - Solaron Corp.

Printed in USA

COLLECTOR INSTALLATION MANUAL

INSTALLATION MANUAL

S.O.L.A.R. 700.00.100 Revision 1

3-77

Series 2000 COLLECTOR PANELS

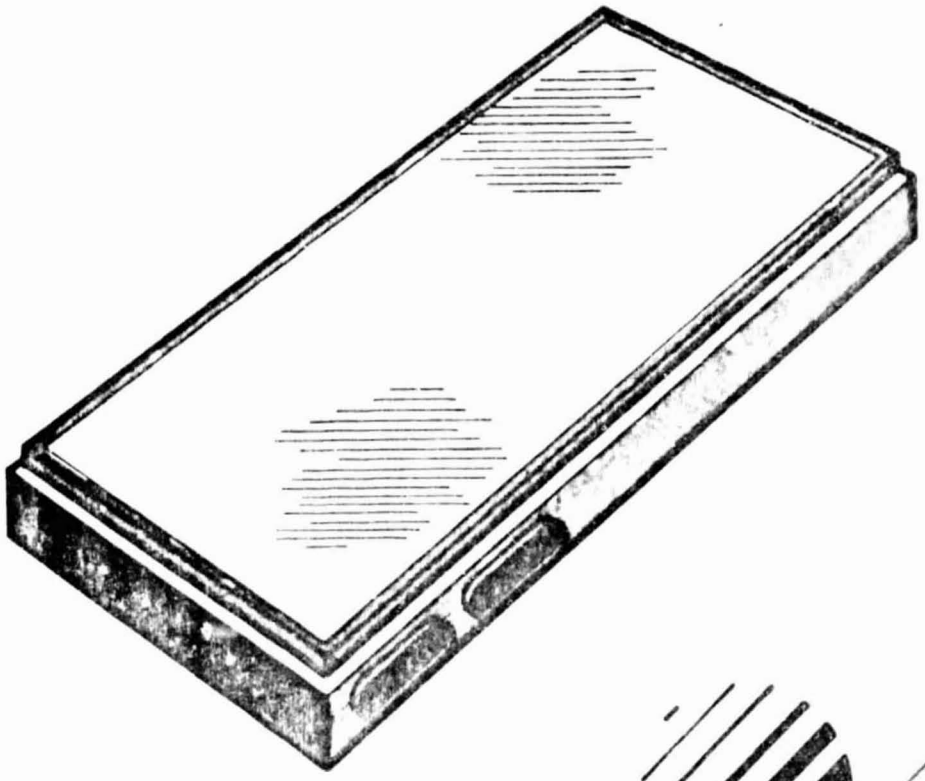

Collectors must be stored in dry area

SOLARON™
SOLAR ENERGY SYSTEMS
720 S COLORADO BLVD
DENVER COLORADO 80222
303/759-0101

© Copyright 1977

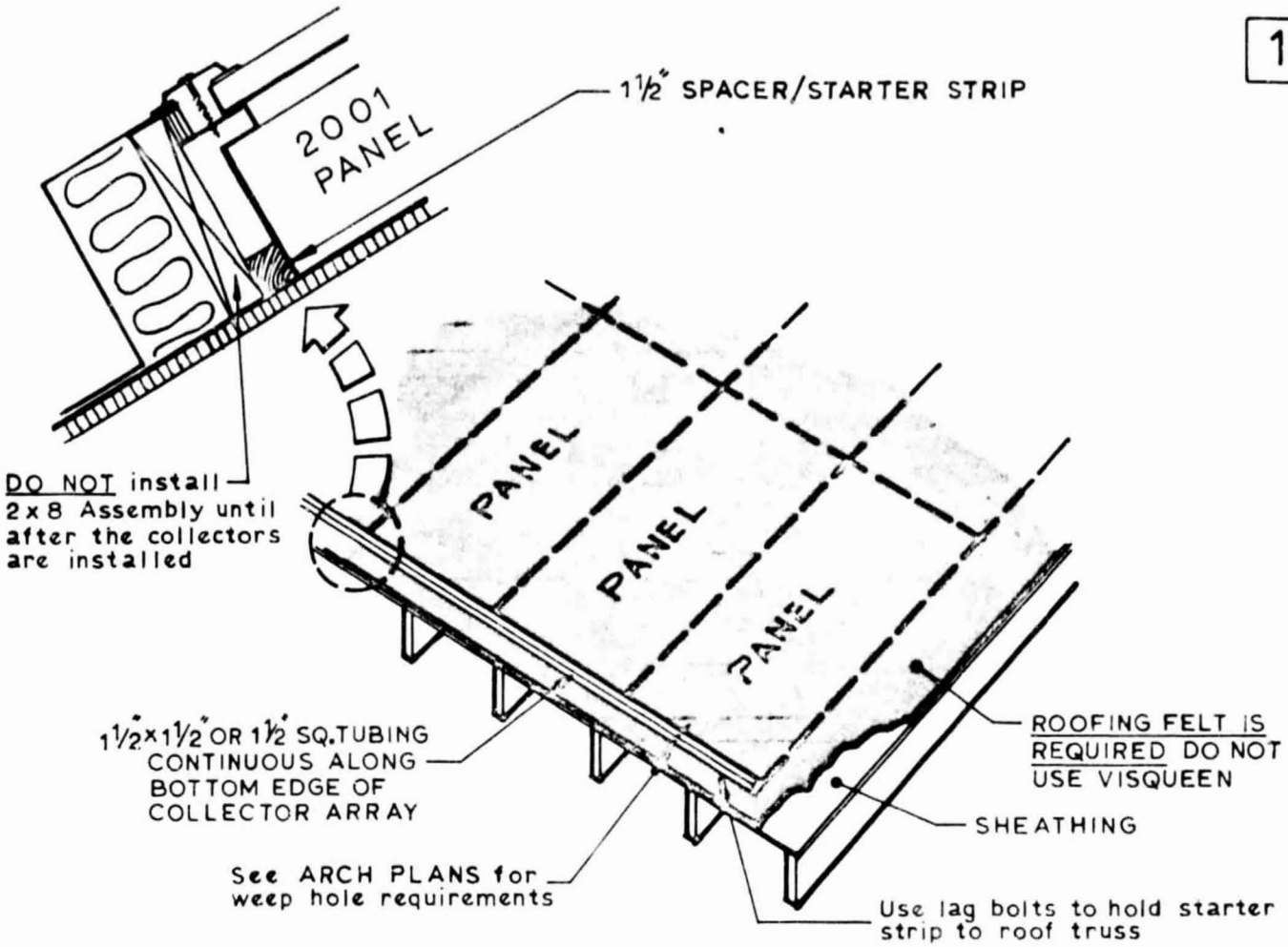

DWG. 1 STARTING PANELS SUPPORT STRIP

STEP #1

The builder and/or framer must install the roofing felt and the 1-1/2" x 1-1/2" starter strip at the bottom edge of the collector array as shown above, BEFORE any collector panel installation is started. This strip serves as support for bottom row of collectors until hold downs are installed and also is used to ensure proper alignment of the entire collector array. The collector array must be laid out so that it will fit on the roof with 6" clear on all sides for cap strip support and perimeter insulation. (see Drawing #2). Do not install 1-1/2" x 7-1/8" perimeter frame prior to collector mounting.

RECOMMENDED TOOL LIST

1/4" or 3/8" reversible, variable speed electril drill, sabre saw, reciprocating saw or skill saw, medium slot-type screw driver, 50 ft. or longer tape measure, 10 ft. to 16 ft. tape, chalk line, square (18"x24"), 2-7/16" hex sockets for 1/4" driver, two 1/4" X 6" extensions (to be mounted in drill chuck), utility knife, pliers (standard), Solaron pull-up tool (limited application), come-along with 30' min. cable length, sunglasses (polarizing), work gloves, safety helmets, safety ropes & accessories (if needed), ladders (appropriate for height of array being worked on), roof jacks (if required), machine for lifting collector onto roof (crane, front loader, etc.), matches or cigarette lighter, caulk gun, left & right snips, scratch awl, 5/16" dia. drill bit 10" long, Scribe.

© Copyright 1976 SOLARON CORPORATION ™

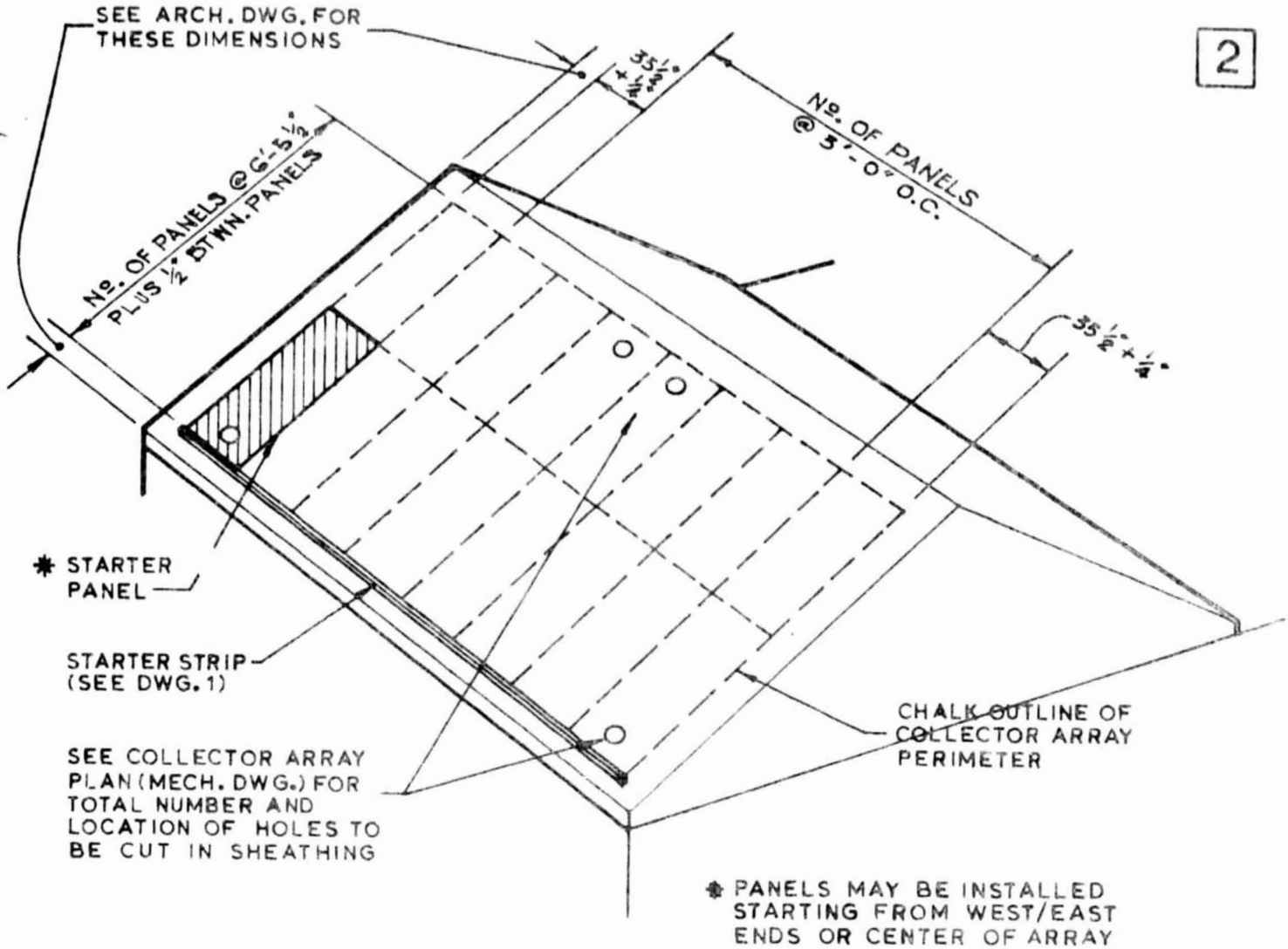

DWG. 2 ARRAY LAYOUT ON ROOF

STEP #2

Chalk outline of actual perimeter of the collector array onto the roofing felt, as shown above, making certain that your lines are square and plumb.

STEP #3

From plan of collector array (mech. drawing) determine location of holes to be cut in sheathing. These holes permit access for starting collar connection between panel and duct work (see drawing #3 & #5). The holes in the collector panels can only be cut in the manifold section as shown in drawings 3 and 5. This must be coordinated with roof sheathing holes. Cut roof sheathing holes 2" in diameter larger than collar (i.e. plans show an 8" collar, cut a 10" hole. Hole may be either round or square.

© Copyright 1976

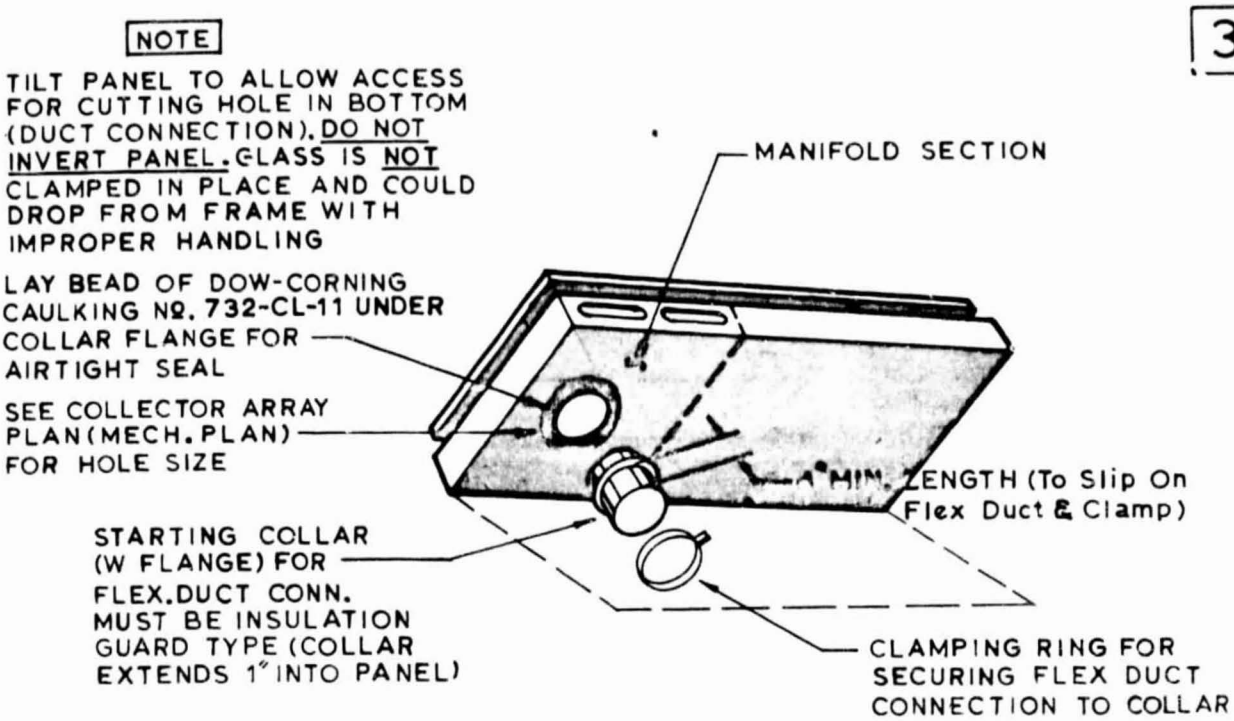

DWG. 3 CUTTING OF COLLAR HOLE (method 4a)

STEP #4

Collar holes to be cut in the collector panels by one of two methods as follows:

(a) Should the location of the mounted panel prevent easy access for hole cutting use method shown above for cutting hole before the collector panel is mounted to the roof sheathing. Make sure the hole you cut in the bottom of the panel and through insulation lines up with hole already cut in the roof sheathing.

(b) After collectors are installed securely on the roof (as per Step #5) cut the required holes in the bottom of each predetermined collector panel (confirm the size & location of each hole with the mechanical plans).

Any method of collar mounting requires caulking with Dow-Corning #732-CL-11 to form air-tight joint between collar flange and the collector.

© Copyright 1976

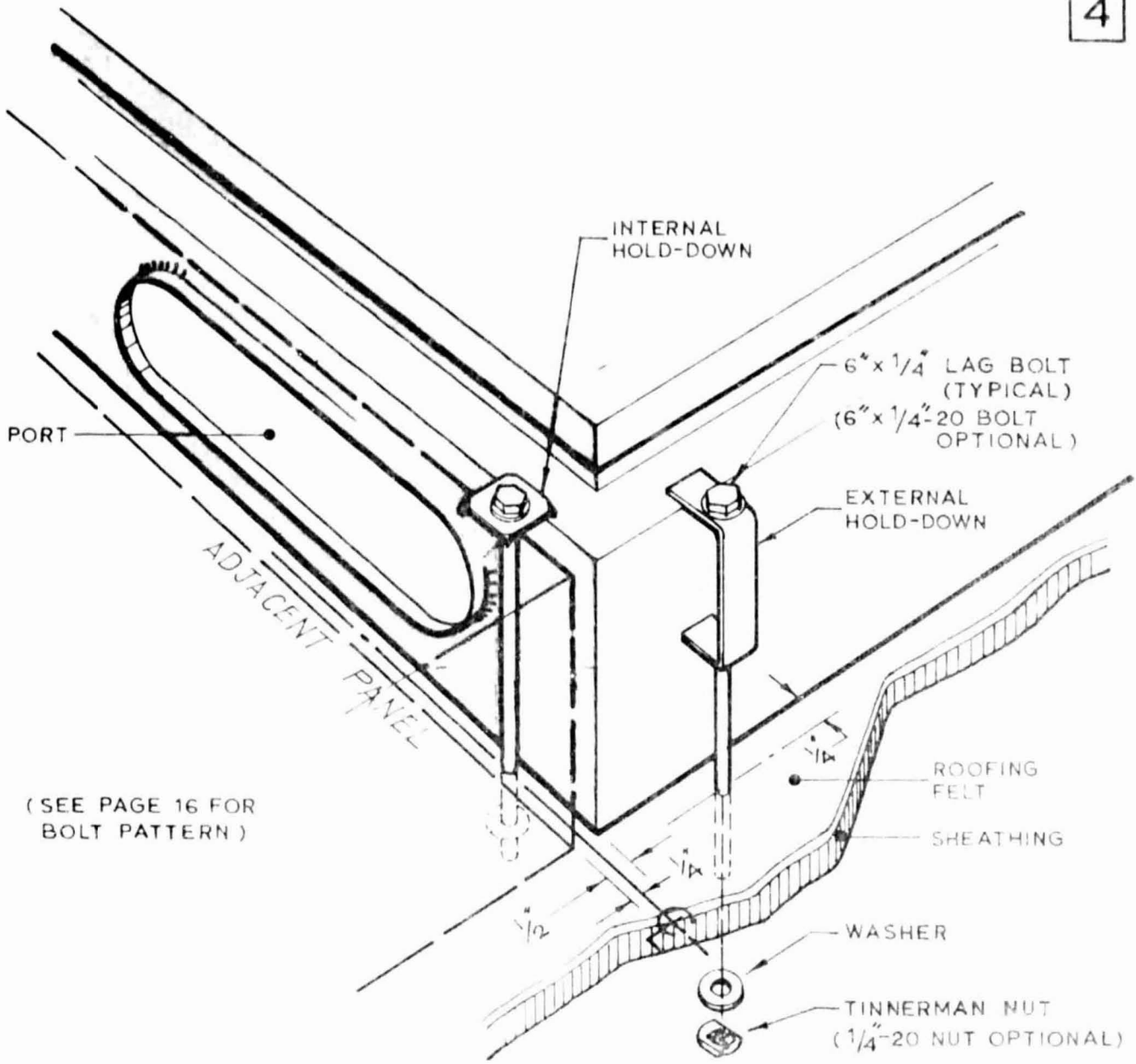

DWG. 4 HOLD-DOWN HARDWARE INSTALLATION

STEP #5

Referring to drawings 4 and 5, drill 5/16" holes in roof sheathing for collector hold downs in designated places, as shown in drawing 5. Secure exterior hold downs after collector is in place. When two panels are mated, drill 5/16" holes for the interior hold downs after the adjoining collector is pulled tightly against the port gasket. The gasket must be kept clean and applied to a clean surface.

© Copyright 1977 SOLARON CORPORATION

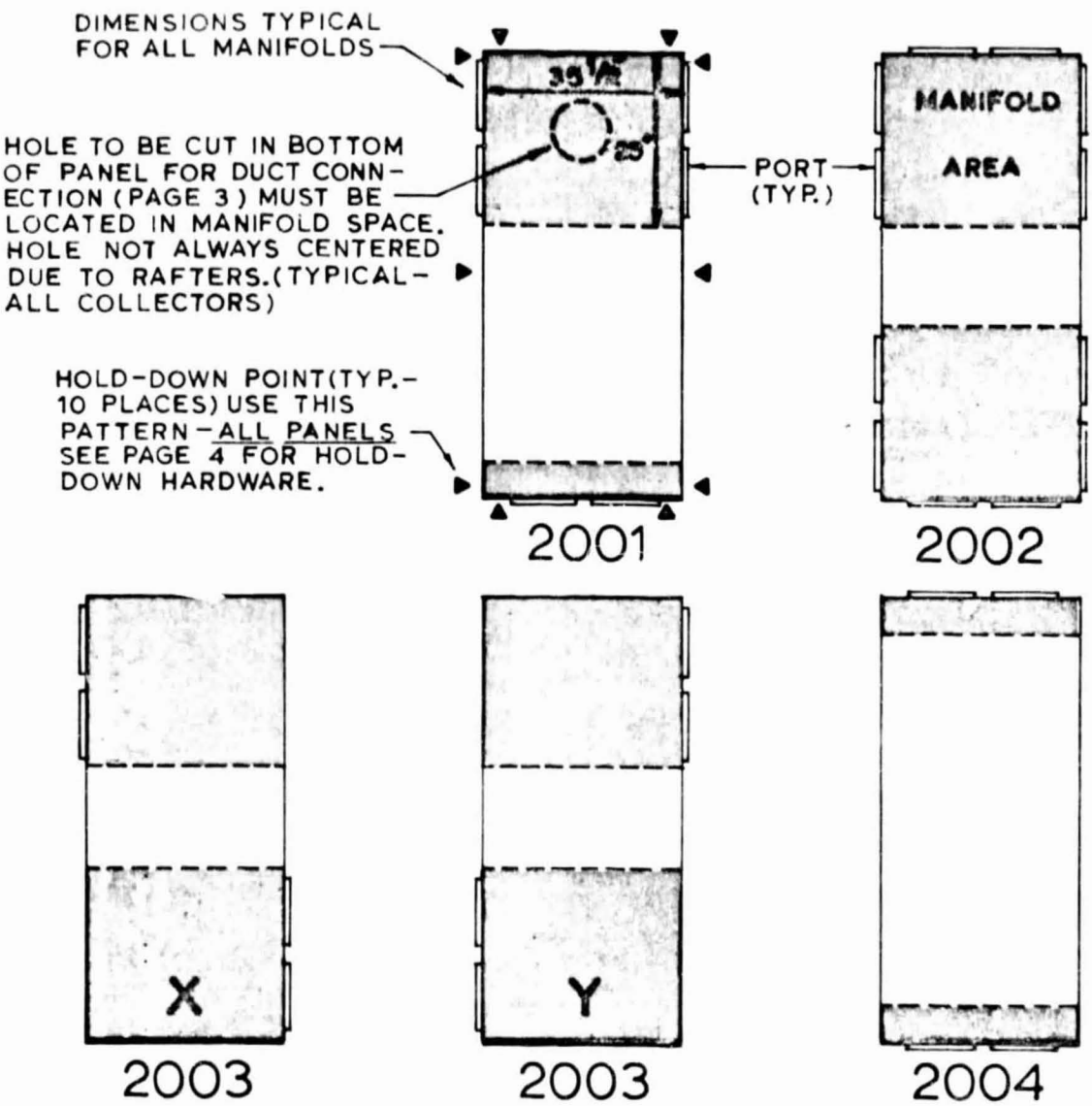

DWG. 5 HOLD-DOWN HARDWARE ATTACHMENT POINTS

STEP #5 (Cont.)

Place each bolt with clamp into its proper hole (external hardware around the perimeter and internal hardware between collector panels - see drawing 4). One person must put a washer and a lock nut onto the same bolt from the attic side of the roof and tighten. A 7/16" socket & 7/16" open end wrench or adjustable wrench is recommended for tightening hold down bolts. Internal hold down should "dimple" collector metal. Exterior hold down should catch rivet. Should the location of the collector place the hold down bolt directly over a structural member you have two methods of mounting. 1) Discard the 6" x 1/4" bolt and use a 6" x 1/4" lag bolt. Tighten directly into the structural member. 2) Discard the 6" x 1/4" bolt and drill a 5/16" hole all of the way through the structural member. Use 1/4" all-thread to the required lenght and mount as described above. CAUTION - be sure the structural integrity of a member is not affected by this method of mounting BEFORE you start drilling.

© Copyright 1976 SOLARON CORPORATION ™

Lag Hold-Downs

Place the hold down hardware (i.e. 6" X 1/4" lag bolt with the appropriate interior or exterior clamp) at the attachment points shown in drawing 5. Screw the lag bolt into the roof sheathing by using a 7/16" hex socket (on a 1/4" extension) and a 1/4" or 3/8" electric drill. Interior hold down clamps must dimple the collector metal to hold properly. Exterior clamps should catch one of the rivet heads on the collector. After lags have been drilled into place, a washer and tinnerman must be placed on the tip of lag from the underside of the roof.

Screw Hold-Downs

After placing collector in position, secure in place using 4 lag bolts or bolts. Using bugle-head drywall screws (2 3/8" #S12 or 6-20 X 1 5/16" flooring screws) drill into the backside of the collector and roof sheathing from the attic area. Eight (8) screws are required; four on each side near the edge of the collector. This procedure is recommended for very steep roof angles. DO NOT use sheetmetal screws for this application. Eight washers are also required and should be placed on the screw before drilling.

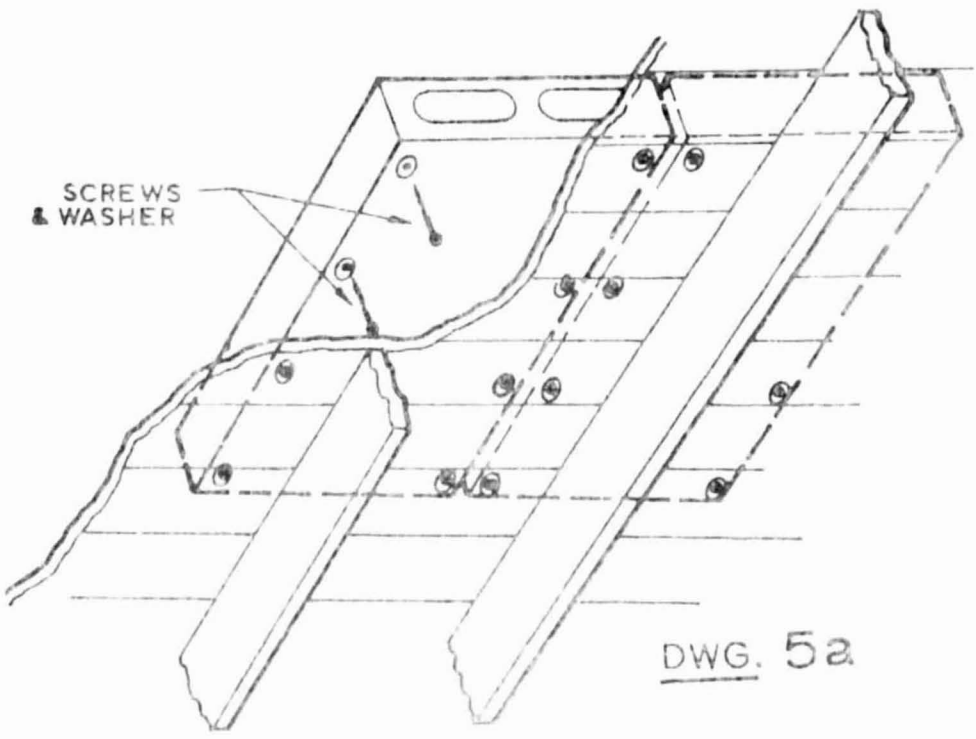

DWG. 5a

© Copyright 1976

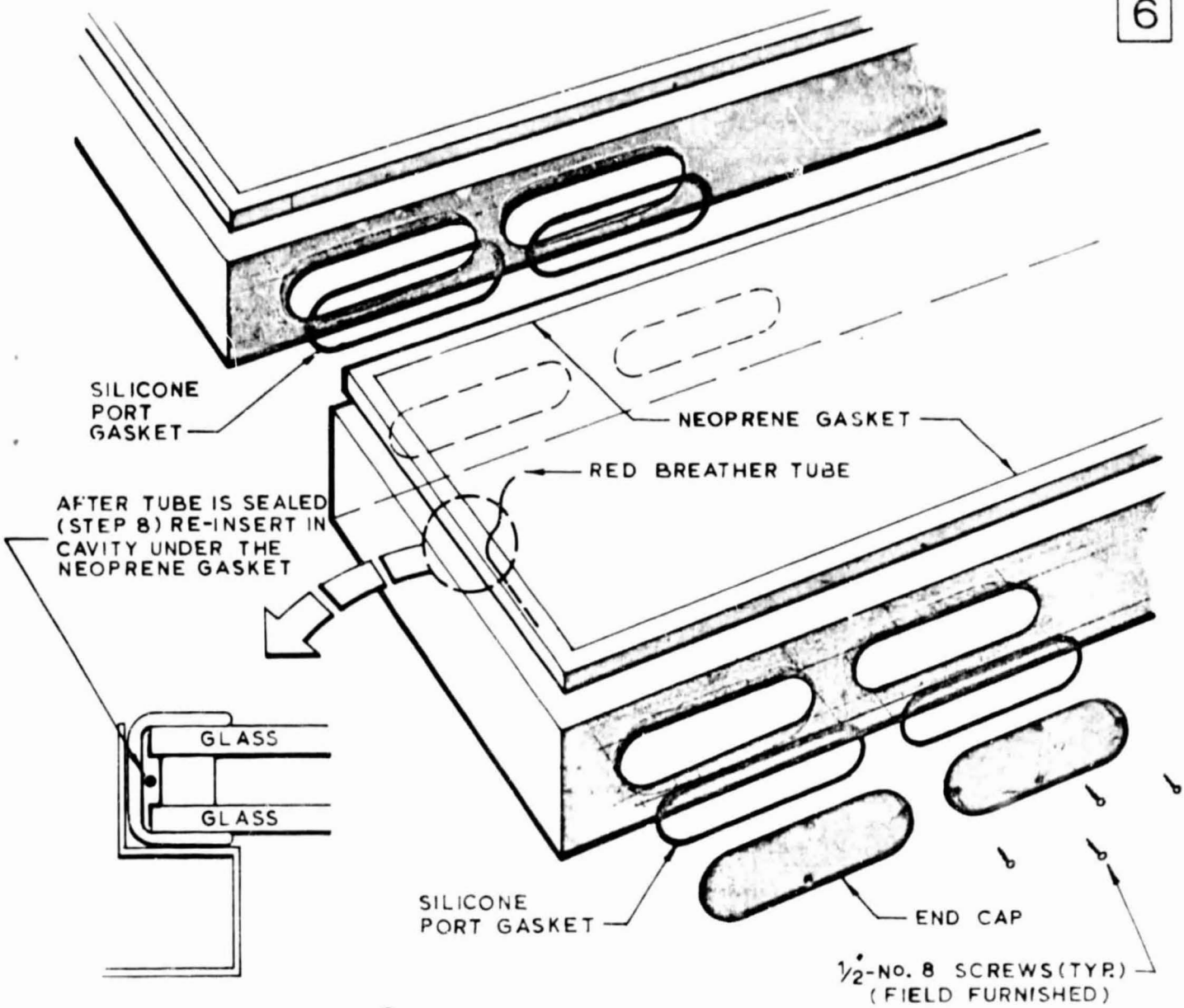

DWG. 6 PORT CONNECTIONS

STEP #6
Install the silicone gasket and attach end cap with screws to the collector panel, as shown above, making sure you obtain an airtight seal. As each panel is positioned in its location be sure that the gasket has been properly mounted around each port that will be immediately mated to an adjacent collector panel port. The gasket must seat evenly around the port to insure an airtight seal.

STEP #7
Lay a bead of Dow-Corning #732-CL-11 caulking compound around the opening in the bottom of the collector panel as shown in Drawing 3. This is to insure an airtight seal between the collector and the starting collar flange. Mount the starting collar in such a manner that will make a solid, airtight connection.

STEP #8 Relief Tube -
When collector is in place and secured, but before cap strip is installed, check red nylon pressure relief tube to make sure it is open so that pressure between panes of glass has had time to equalize to local atmospheric pressure. Next, seal tube by tying knot in tube and permanently sealing end by melting and squeezing the open end closed. Now place closed tube under neoprene gasket along the edge of the glass (see detail on dwg 6) & return gasket to normal position.

© Copyright 1976 SOLARON CORPORATION™

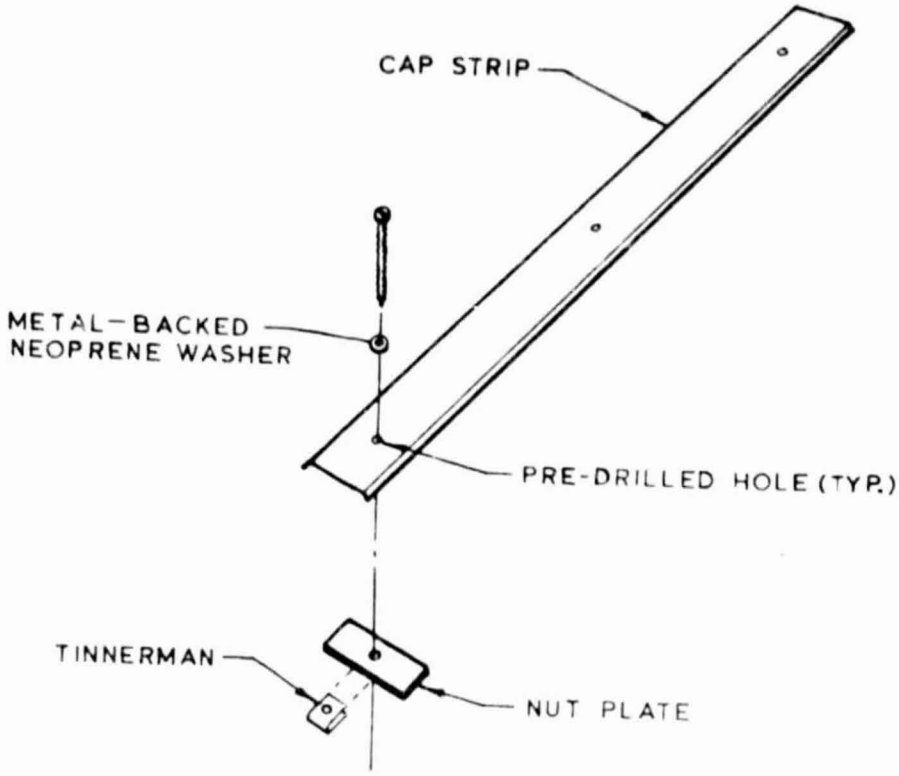

DWG. 7 CAP STRIP ASSEMBLY

STEP #9

After all the collectors are in place and secured, coordinate with builder to install 1-1/2" x 7-1/8" frame assembly around perimeter of array as per drawings 8 and 9 (mounting cap strip and flashing). Flashing must be installed before perimeter sealant and perimeter cap strip can be installed.

© Copyright 1976

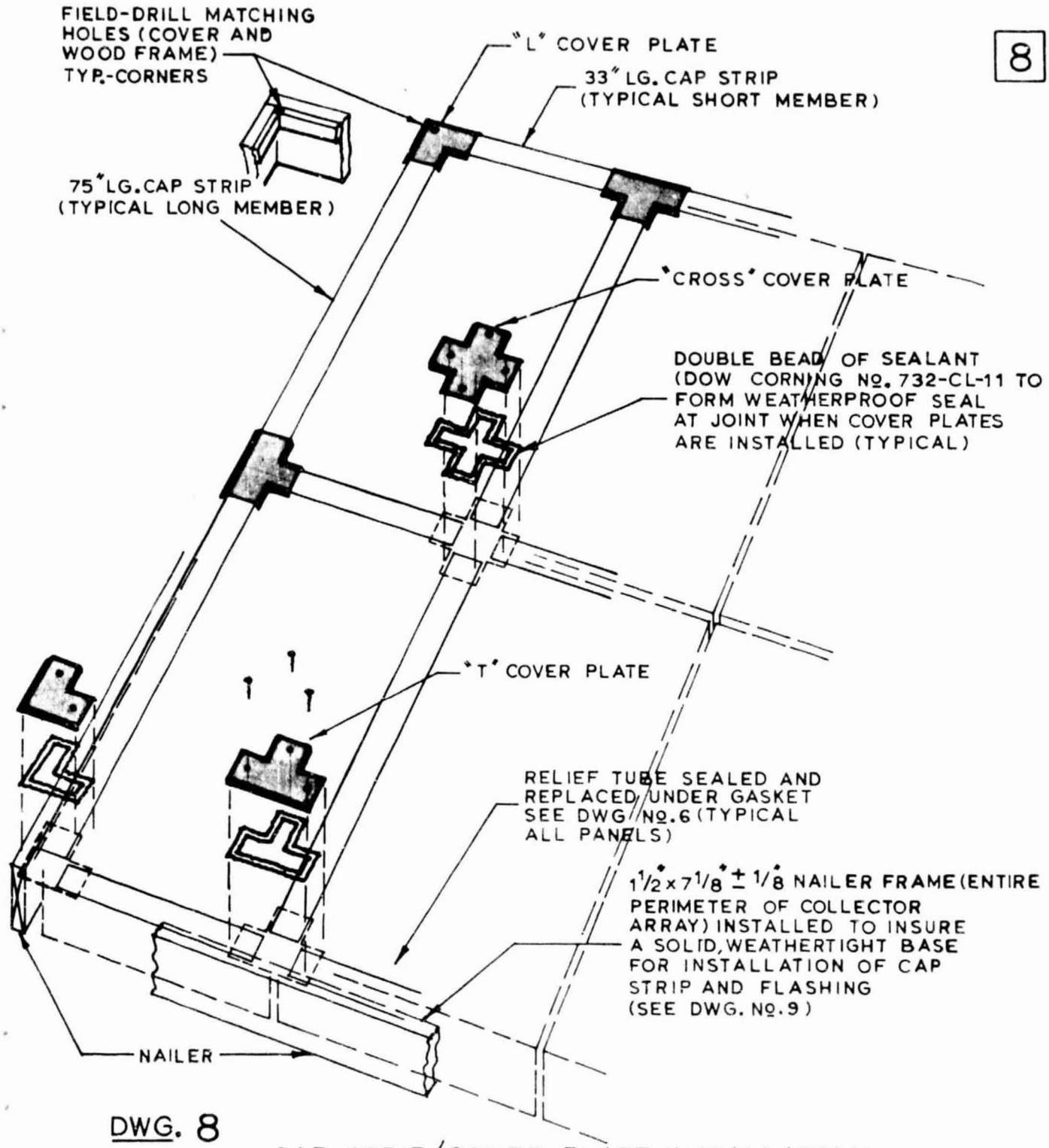

DWG. 8

CAP STRIP/COVER PLATE INSTALLATION

STEP #10

Referring to Drawings 7 & 8 start installation of cap strip. Cap strip is mounted with 2-1/2" screws and metal backed neoprene washer. Place screw with washer through pre-drilled holes in cap strip. See Drawing 7. Turn the screw into the tinnerman clip approximately 3 turns. Place cap strip so that each edge is lined up on collector glass gasket evenly with nut plates under glass enclosure lip. By pressing on the screw while turning to secure nut plate, you will keep nut plate straight so that it will secure itself under adjacent glass enclosure shelves. Cap strips between collectors should be mounted during collector installation to hold glass in place.

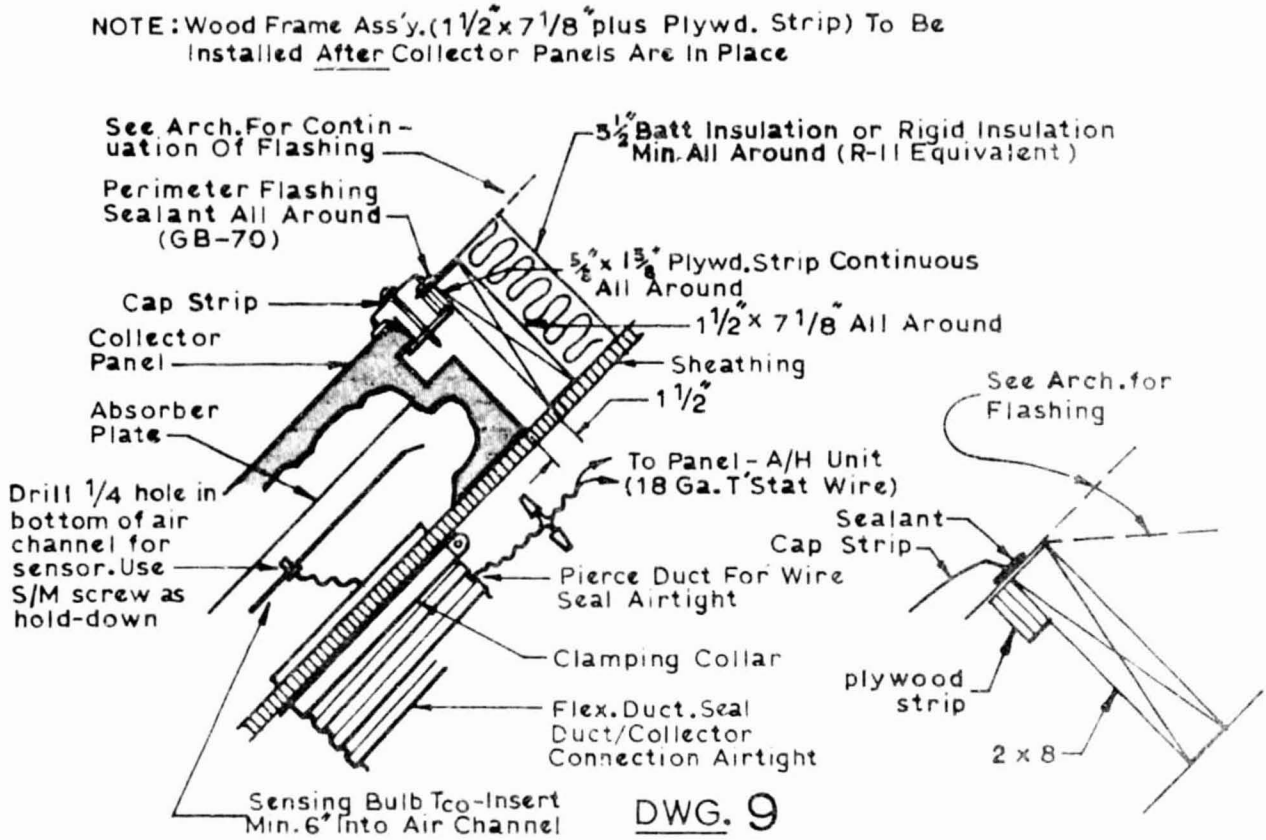

DWG. 9

COLLECTOR FLASHING/SENSOR PLACEMENT

STEP #11

When you install the perimeter cap strip, the same procedure is followed, except that you will be placing one edge of cap strip on glass gasket and the other edge into the perimeter flashing sealant (See drawing 9). Flashing sealant is placed on flashing prior to cap strip mounting.

STEP #12

When installing the "Cross, El or Tee" cover plates, run a double bead of Dow-Corning 732-CL-11 silicone caulk on the cap strip as shown in Drawing 8. Install 5/8" Tec self-drilling screws in pre-drilled holes and tap into cap strip. A third hole must be drilled into the 90 degree L in accordance with the wood backing to obtain a tight seal in the corners (see Drawing 8).

NOTE: 2-1/2" screws, metal backed neoprene washers, nut-plate and tinnermans & 5/8" self-tapping screws furnished by Solaron.

© Copyright 1976

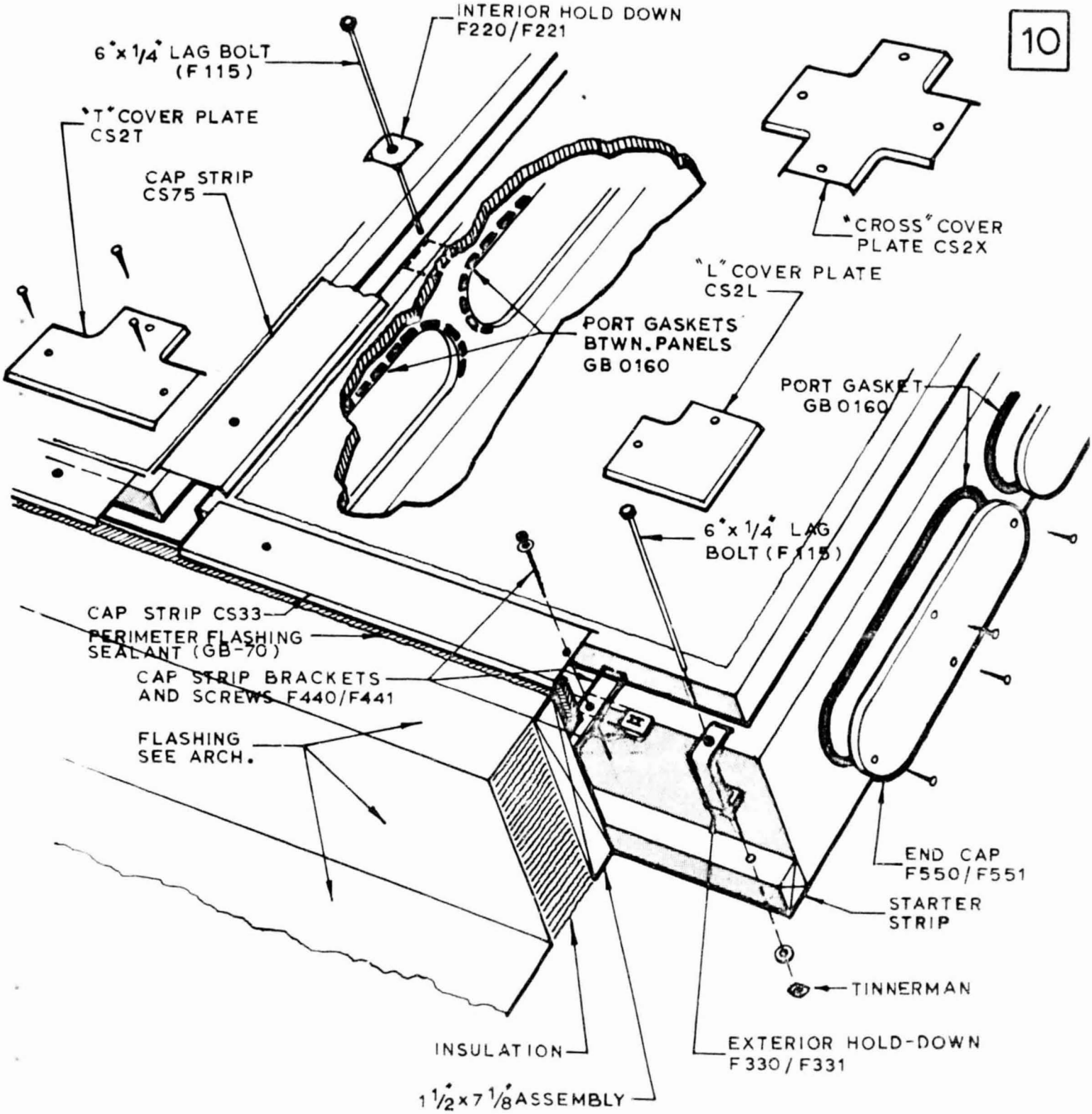

DWG. 10 ASSEMBLY DETAILS

© Copyright 1977

SOLARON Corporation TM

1 HIGH VERTICAL ARRAY

11

(2003 "X" and "Y" PANELS)

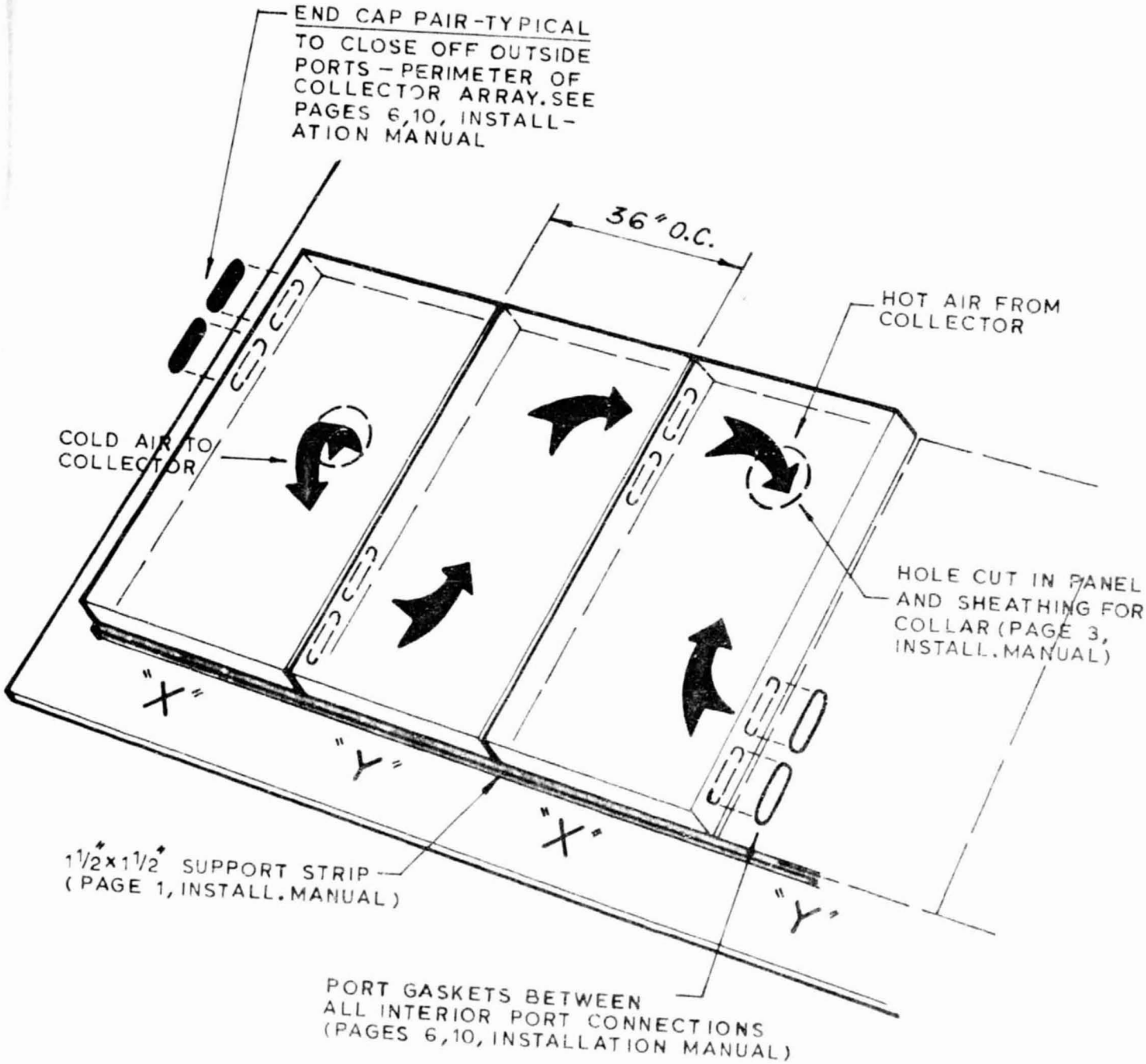

SEE INSTALLATION MANUAL FOR ADDITIONAL INSTRUCTIONS

© Copyright 1976

3 HIGH VERTICAL ARRAY

12

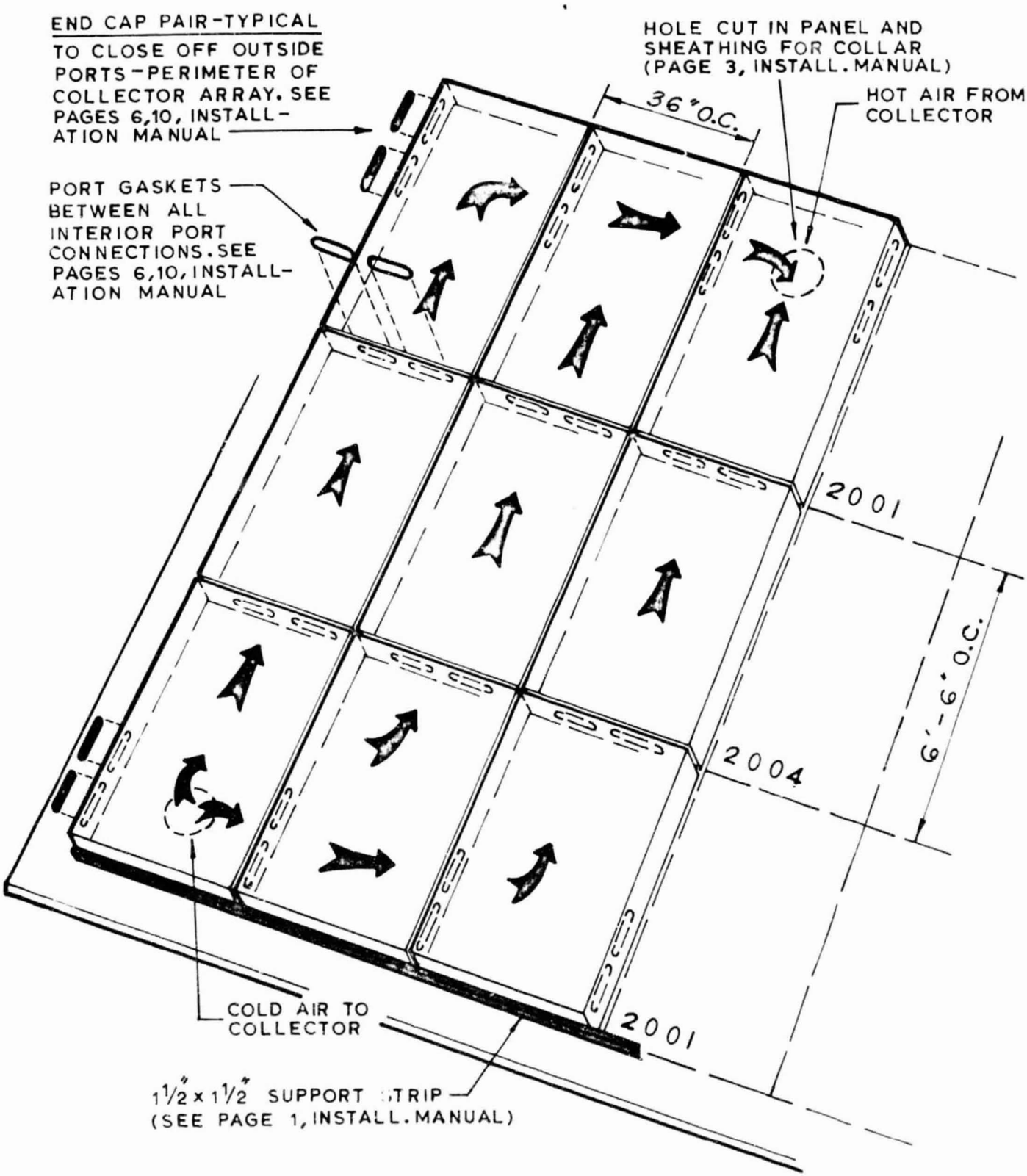

SEE INSTALLATION MANUAL FOR ADDITIONAL INSTRUCTIONS

© Copyright 1976

1 HIGH HORIZONTAL ARRAY

13

(2001 PANEL)

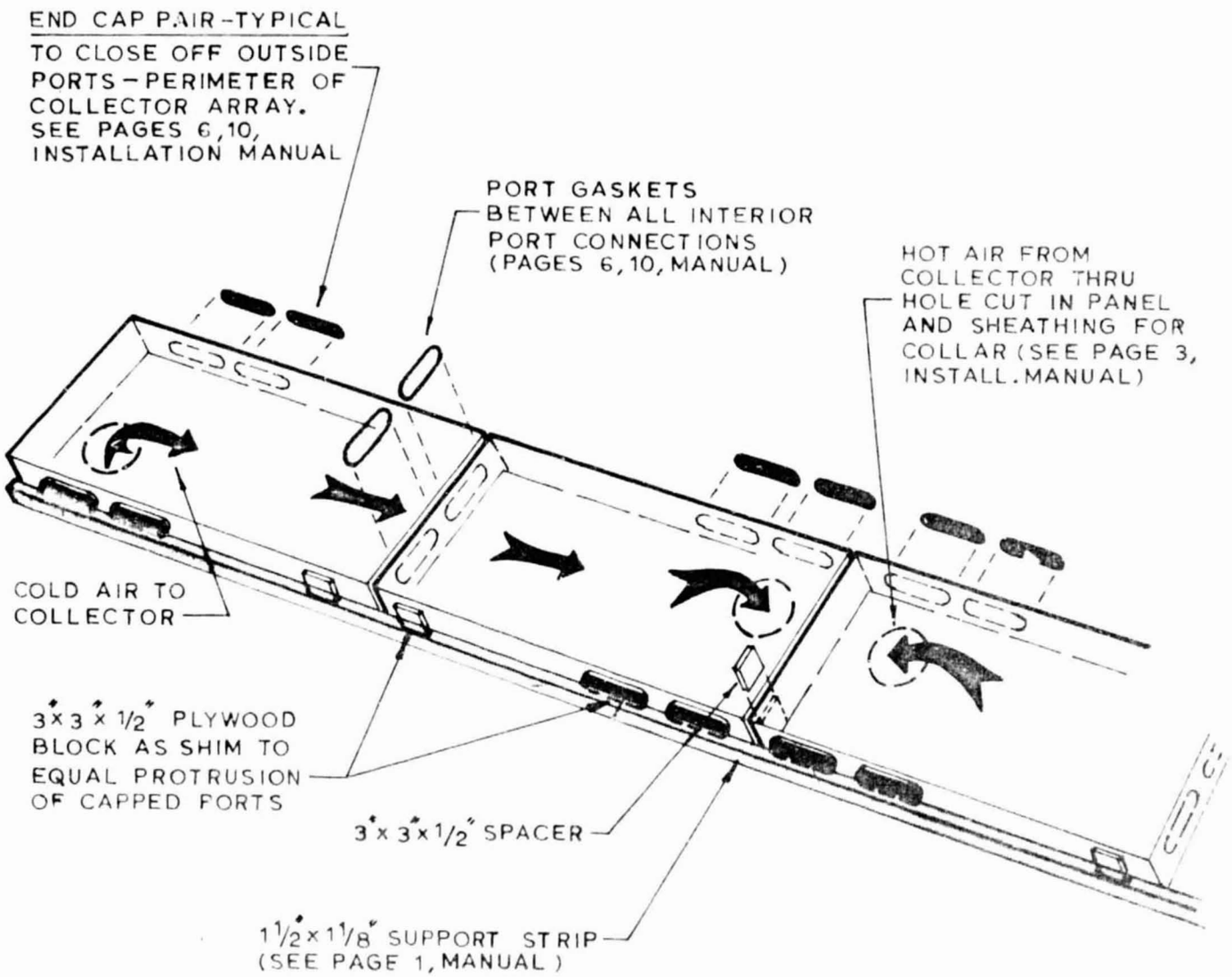

SEE INSTALLATION MANUAL FOR ADDITIONAL INSTRUCTIONS

© Copyright 1976

3 HIGH HORIZONTAL ARRAY 14

(2001 PANEL)

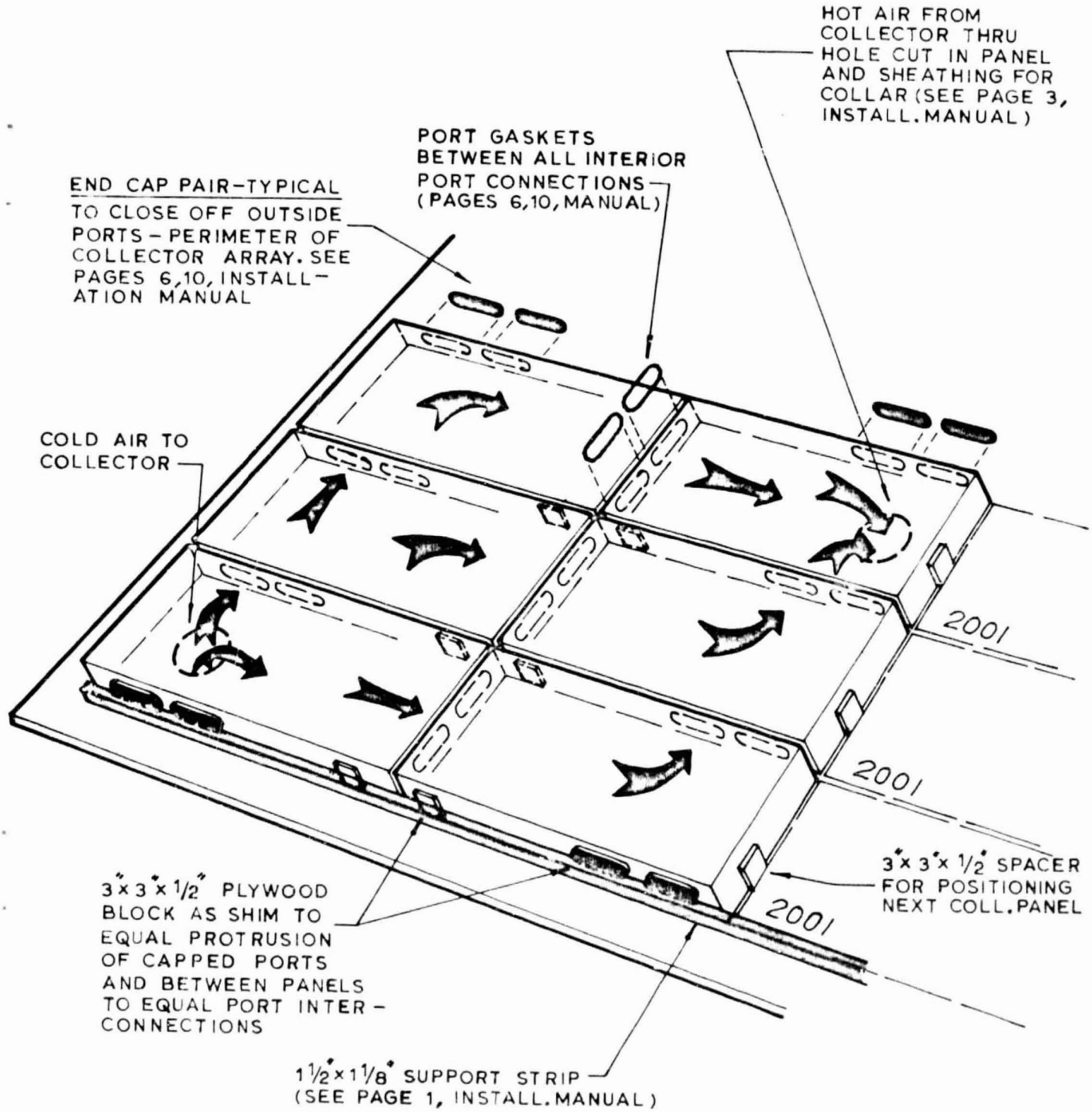

SEE INSTALLATION MANUAL FOR ADDITIONAL INSTRUCTIONS

© Copyright 1976

SOLARON Corporation TM

CONTROLLER INSTALLATION MANUAL

INSTALLATION MANUAL

S.O.L.A.R. 1500.00.155

6-1977

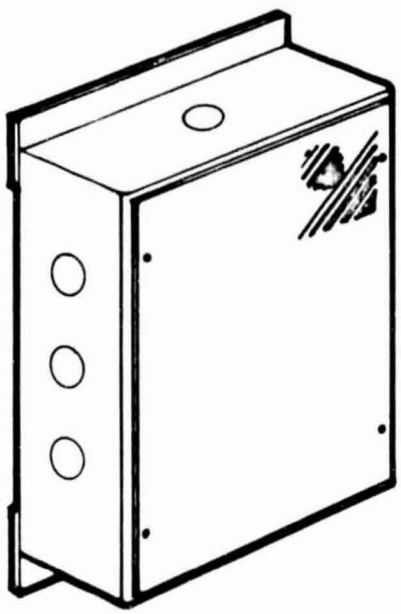

SOLARON™ Controller HC0116

FOR USE WITH AU0400 & AU0500 AIR HANDLER

CONTAINS OPERATION & MAINTENANCE DETAILS

Applications:

HEAT PUMP

Solaron™ Corporation reserves the right to make changes at any time, without notice, in materials, equipment, specifications, prices, models and design criteria, and to discontinue models.

SOLARON
SOLAR ENERGY SYSTEMS
TM

ORIGINAL PAGE IS
OF POOR QUALITY

SOLARON CORPORATION™
300 GALLERIA TOWER
720 SO. COLORADO BLVD.
DENVER, CO. 80222 (303) 759-0101

© Copyright 1977

LOCATING THE SOLARON CONTROL PANEL AND TRANSFORMER

Mount the control panel in a convenient location that allows easy access for electrical wiring and "summer/winter" switch operation. Generally the mechanical room is the best location. Electrical service consisting of one 115 VAC circuit is ample to power the 100 VA, 120 VAC/24VAC transformer accompanying the control panel. Separate power circuits may be needed for the AU0400 or AU0500 unit and the auxiliary heating unit (refer to local and national building codes).

Low voltage wiring is needed to connect the Solaron space thermostat to the Solaron control panel as well as between the auxiliary heating unit, damper motors and the control panel. Damper motors are low voltage.

The thermostat MUST be wired through the Solaron control panel, it CANNOT be wired direct to the auxiliary heating unit and/or Solaron air handling unit.

SOLAR SYSTEMS SENSORS

Sensors must be properly placed in the following locations before system start-up can be accomplished:

1. Tco - Sensor must be in absorber plate air channel (not in duct connection or manifold plenum).
2. Tci - Locate at junction of house return air duct and duct connecting to bottom of heat storage (for systems with by-pass of heat storage for summer water pre-heating, locate in duct to collector where "by-pass" tees in).
3. Ts - Top of rock in heat bin.
4. Tw - Locate in bottom of water storage tank (not the auxiliary water heater) near inlet of heat exchanger coil. (If using an unwired electric water heater for a storage tank, the thermostat in the tank can be used as Tw. Disconnect power leads from thermostat and power element and wire through terminals that open on temperature rise - set @ 140°F). Tw is field furnished (Honeywell L6006A1145 @ 140°F and differential set @ 10°F).

HUMIDIFIERS

Horizontally mounted type humidifiers are recommended. Locating the humidifier in a horizontal supply duct coming off of the auxiliary heating unit is ideal. Utilizing a sail-switch activated duct humidistat (similar to a Honeywell H49B) will simplify the wiring requirements of most installations.

DO NOT wire low voltage humidifiers or air cleaner relays in series with the thermostat wires (W_1 & W_2) as this can damage the Solaron controller. Sail or air pressure switches are recommended.

© Copyright 1977 Solaron Corporation, Denver, Colorado

LOCATING THE THERMOSTAT

The Solaron multi-element thermostat should be located on an interior wall free from cold and warm drafts. Be sure adequate room air movement is present so the thermostat will provide a comfortable building temperature.

Do not locate the thermostat near lamps, heat outlets, stoves, refrigerators, television sets, etc. The heat given off by these appliances will not allow the thermostat to properly control the building temperature.

The thermostat heat anticipators should be set as follows: W_1 @ .10 amp, W_2 @ .10 amp. Cooling anticipators are non-adjustable.

SOLARON CONTROLLER AND THERMOSTAT LIST

AU0400 and AU0500 air handlers can be used in various applications.

Application	Solaron Controller Controller	Thermostat & Sub-base	Additional Relays Needed
Heat pump reversing valve energized for heating	HC0116	HC0022 HC0043	(2)#SR0225 Relays 1-AU0400 Blower 1-Dom. Water Pump
Heat pump reversing valve energized for cooling	HC0116	HC0023 HC0043	(2)#SR0225 Relays 1-AU0400 Blower 1-Dom. Water Pump

© Copyright 1977 Solaron Corporation, Denver, Colorado

THERMISTOR TEMPERATURE/OHM RESISTANCE CHART

TEMP. C°	TEMP. F°	RESISTANCE OHMS	TEMP. C°	TEMP. F°	RESISTANCE OHMS
0	32	105,310	90	194	2,312
5	41	80,725	95	203	1,962
10	50	62,354	100	212	1,671
15	59	48,519	105	221	1,428
20	68	38,022	110	230	1,225
25	77	30,000	115	239	1,054
30	86	23,827	120	248	910.0
35	95	19,044	125	257	787.9
40	104	15,314	130	266	684.3
45	113	12,388	135	275	595.9
50	122	10,077	140	284	520.3
55	131	8,242	145	293	455.4
60	140	6,777	150	302	399.6
65	149	5,600			
70	158	4,651			
75	167	3,880			
80	176	3,251			
85	185	2,736			

The above chart can be used by the Solaron service technician to determine temperatures at Tco and Tci sensor locations.

To measure the resistance of a thermistor sensor disconnect both of its wires from the control panel (Tco & Com. or Tci & Com.). Measure the resistance using a good, accurate OHM meter. Once the resistance has been read it can easily be located on the above chart as well as the corresponding temperature to the left of the resistance.

The temperature difference between Tci and Tco must be 40°F (±7°F) or greater to energize the "collector" relay. Should Tci & Tco leads be "crossed" the system will not operate under sunny conditions. Reversing the Tci & Tco leads will correct the problem. System will cease to collect solar energy when the differential drops to 25°F (±5°F) or less.

© Copyright 1977

4

HEAT PUMP
ENERGIZE F/HEATING OR COOLING

SOLARON CONTROL PANEL HC0116
WITH HC0022 OR HC0023 THERMOSTAT AND HC004 SUB-BASE

SEQUENCE OF OPERATION

I. SOLAR ENERGY AVAILABLE - when $40^{o}F$ ($\pm 7^{o}F$) differential is achieved between sensors Tco (in collector) and Tci (in return air duct - see specific plans), the following events take place:

A. Storing Heat - Room thermostat not calling for heat.

1. Differential thermostat in Solaron controller will activate "COLL" (collector) relay.

a. MD1 (motorized damper) - will be energized and powered open to allow air to flow to the inlet of the solar air handler blower (BWR), which is energized at the same time.

b. HWP (hot water pump) is also energized at this time if the Tw sensor (aquastat on water storage tank) is not satisfied (i.e. tank is less than $140^{o}F$).

c. MD2 (motorized damper) will be energized and powered closed to prevent air from flowing to the auxiliary heating unit.

B. First Stage Heating is called for by room thermostat - W_1 & R_H and sub-base system switch is set on "Auto" or "Heat".

1. "H1" (first stage solar heating) relay is energized.

a. "G" and "R" (fan auxiliary furnace) are energized, bringing on the heat pump indoor fan.

b. MD3 circuit is energized, closing the damper from its fully open position to its partially open or fully closed position (field balancing required).

c. MD2 opens as power through N.C. contacts in relay "HI" are interrupted.

d. Relay contacts close circuit to Ts sensor which is still in an open circuit via the "COLL" relay contacts position.

*C. Second Stage Heating is called for by room T-stat. First stage is still "made". If solar heat is available (i.e. "COLL" relay energized) when "H2" relay is energized, solar system will store heat while heat pump provides space heat.

1. "H2" (second stage auxiliary heat) relay is energized, completing the following circuits:

© Copyright 1977 Solaron Corporation, Denver, Colorado

a. MD2 is powered closed.

b. MD3 is unpowered - opens full.

c. "R_C" circuit is completed to "Y" bringing on compressor in heat pump.

d. "R_C" circuit to "G" is still made keeping on auxiliary indoor unit blower.

e. "R_C" circuit to "R3" is completed. No additional auxiliary relays are energized at this time.

D. Third Stage Heating is called for by second room T-stat (or outdoor thermostat). "R3" circuit to "W3" is completed, bringing on resistance electric heating elements in the indoor auxiliary unit ("R" to "W_1" circuit and "R" to W_2 circuit in HC0116 are "made").

E. "Emergency Heat" (to be used only if directed to do so by your service repairman, in the unlikely event of a heat pump malfunction). When the sub-base switch is put in this position the "Emergency Heat" relay will be energized.

The "EA" relay will complete the circuit between "R" and "E" allowing the indoor auxiliary unit to bring on the electric resistance heat when there is a call for heat from the heat pump (H2 energized).

II. SOLAR ENERGY NOT AVAILABLE. When differential between Tco and Tci drops to 25°F (±5°F) or less, the following takes place:

A. "COLL" relay - de-energized.

1. HWP de-energized, pump off.

2. BWR de-energized, solar blower off.

3. MD1 de-energized and closed.

4. MD2 de-energized and open.

B. Circuit completed to Ts sensor if "H1" relay is still energized. If Ts sensor is above 90°F set point, system will heat space from heat storage unit. If Ts sensor is below 90°F set point circuit will be completed to "H2" relay and bring on the auxiliary heating unit without the need for the second stage of the T-stat to make.

III. Sub-base Switch Modes.

A. Fan - "On-Auto".

1. "Auto" position will permit auxiliary indoor unit fan to cycle on and off to meet the heating demands of the system.

© Copyright 1977 Solaron Corporation, Denver, Colorado

6

2. "On" position will allow the auxiliary indoor unit fan to run constantly and allow MD3 (by-pass) damper to open fully, except when first stage heating is required.

B. Thermostat calling for Cooling (Summer Operation) System switch on "Auto" or "Cool".

**1. First stage cooling:

a. "R_C" circuit to "Y_1" is "made", on heating/cooling thermostat energizing reversing valve in outdoor unit (for units with reversing valve energized for cooling).

b. "R_C" to "G" made; "R" to "G" made in HC0116 panel, brings on heat pump indoor unit fan.

2. Second stage cooling.

"R" to "Y" contacts close. Compressor circuit is energized to provide cooling.

NOTES

* Heat Pump Systems with reversing valve energized for heating can generally be wired as follows:

HC0116 Terminal Strip	Heat Pump Terminal Strip Equivalent
Y	W_1
W	W_2
O	Y

**Heat pumps where the reversing valve is not energized for cooling use only one stage of cooling.

DOMESTIC WATER HEATING

Switch "Winter" Position

Domestic water will be preheated anytime the system is storing heat or heating from collector.

Switch "Summer" Position

Domestic water will be preheated whenever enough solar energy is available to activate the system. When the stored water temperature reaches the set point of Tw sensor (about 140°F) the system will shut-down until the stored water temperature drops about 10°F.

© Copyright 1977 Solaron Corporation, Denver, Colorado

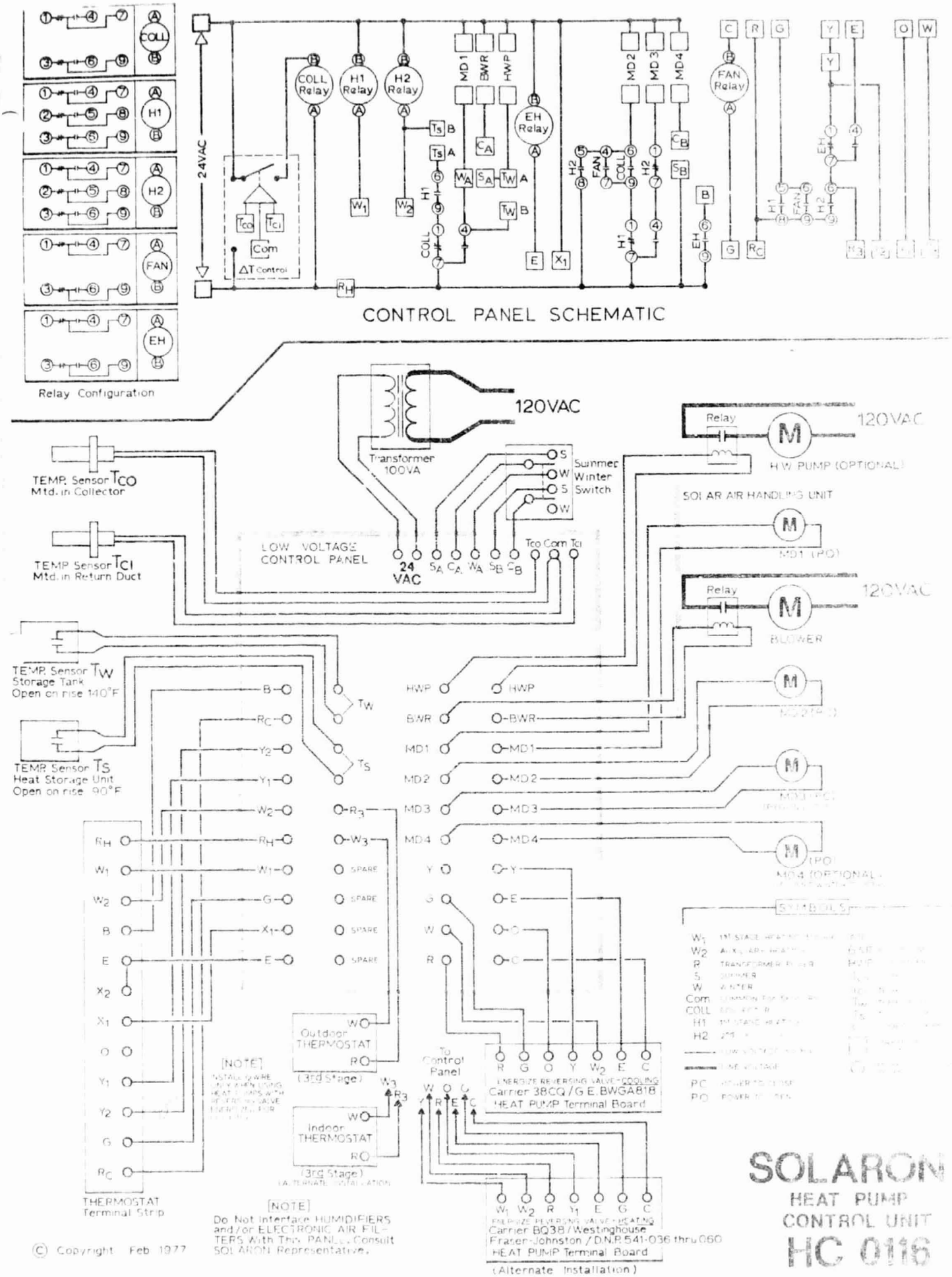

© Copyright Feb 1977

GENERAL OPERATING PROCEDURE
FOR THE SYSTEM OWNER

SOLARON AU0400 AND AU0500 AIR HANDLERS

By simply adjusting the wall mounted thermostat you will be able to maintain a comfortably living or working environment.

By setting the switches located directly under the thermostat, and the sliding levers on top, you can select the type of operation you desire.

For winter heating set the top lever at the desired temperature that you wish to maintain. The thermostat will automatically operate the solar portion of your heating system as well as the auxiliary heating unit if conditions warrant its operation. Please do not "jiggle" the levers.

Should your space conditioning system feature cooling as well as heating, you merely move the switch underneath the thermostat to any desired position ("System Switch - Off - Heat - Auto - Cool). Locating the switch in the "Auto" position will permit the thermostat to automatically place the system in a heating or cooling mode of operation without further adjustment.

Space conditioning systems incorporating a heat pump heating and cooling auxiliary unit will have a thermostat switch position marked "Emerg. Heat". The only function of this switch is to provide emergency electric heat should the heat pump malfunction during a period of time when a serviceman is not readily available.

Nominal maintenance is required with this sytem. Please refer to "Maintenance Instructions" provided in the Installation Manual.

Please call your qualified Solaron serviceman should problems develop.

Installing Solaron Solar System Contractor

Name:_____

Address:_____

Phone:_____

The Solaron controller requires that its "Summer-Winter" switch be placed in the appropriate season position. When switching seasons it may be necessary to move some system dampers. Please have your installing contractor indicate these dampers to you.

Maintenance Instruction

The AU0400 and AU0500 require minimal upkeep for economical and long lasting operation.

Blower Type 1 - Permanently sealed bearings - no oil required.

Motor Type 2 - Blower Motor - Oil twice a year (#20 S.A.E. non-detergent oil).

Blower bearings - Permanently sealed - no oiling required.

V-Belt - Check wear and tension, replace if necessary.

Damper Motors - Oil with #10 S.A.E. non-detergent oil (similar to #465 Anderol or Goodlight #10 oil.) Twice a year.

Water Pump - The Grundfos circulator pump requires no oiling as it is water lubricated during normal operation.

DO NOT RUN PUMP DRY

AIR HANDLER INSTALLATION MANUAL

INSTALLATION MANUAL

S.O.L.A.R. 900.40.050
6-1977

INLET

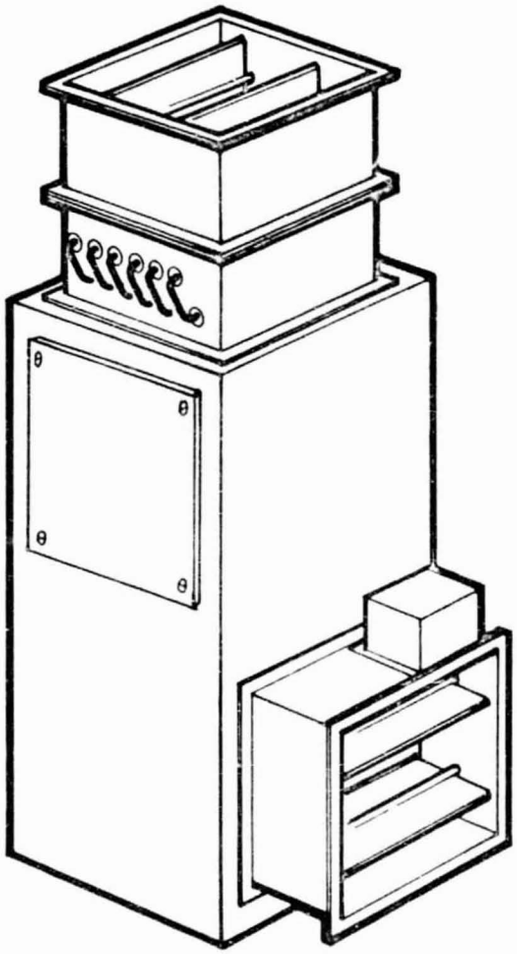

SERIES
AU0400 & AU0500
AIR HANDLER

Solaron™ Corporation reserves the right to make changes at any time, without notice, in materials, equipment, specifications, prices, models and design criteria, and to discontinue models.

SOLARON
SOLAR ENERGY SYSTEMS
TM

SOLARON CORPORATION™
300 GALLERIA TOWER
720 SO. COLORADO BLVD.
DENVER, CO. 80222 (303) 759-0101

© Copyright 1977

SOLARON AU0400 AIR HANDLING UNIT

Solaron's model AU0400 series air handler units are shipped less motor and internal wiring to facilitate installation in a wide variety of applications. All AU0400 series units are manufactured with highly reliable belt drive type blowers. Motors are to be field installed to match each installations air delivery requirements. Compatible motors are 1/3, 1/2 & 3/4 H.P. of 115 or 230 volt power input. Class "B" insulation types of motors are required for use in the AU0400 units due to the higher operating temperatures typical of an air-type solar heating system. All units have a factory mounted "J" box for convenient line voltage field wiring.

WARNING: Do not install the AU0400 unit in a corrosive, explosive or contaminated atmosphere for any reason. Installation of this unit is subject to all applicable local and national building codes and ordinances.

The Solaron AU0400 may be mounted in several positions. Any mounting position must result in the blower shaft being in a horizontal position (i.e. parallel to the floor). DO NOT MOUNT in a position that places the blower shaft in a vertical orientation.

The AU0400 may be suspended from ceiling joists, wall-mounted or floor mounted. Provide adequate vibrations isolators to insure quiet operation.

NOTE: The AU0400 contains no electric heating coils or gas-fired exchangers that produce inherently high temperatures.

REQUIRED DAMPER MOUNTING

Mounting the Solaron dampers on the inlet and outlet of the AU0400 air handler is easily accomplished if the steps listed below are followed:

1. If the system incorporates the optional domestic water preheating, mount the water coil assembly to the inlet of the AU0400 unit using sheet metal screws. (If the inlet is to be on the end of the AHU, an opening must be field cut). Next, mount damper MD1 onto the mounting flange of the water coil assembly.

2. Position and mount with sheetmetal screws damper MD1 (inlet from collector "normally closed") over the opening on the inlet of the air handler, or water coil if used. Dampers are labeled to indicate direction of air flow and must be installed accordingly.

3. Position and mount with sheetmetal screws damper MD2 (outlet to auxiliary heating unit "normally open") over one of the openings on the outlet of the air handler. Field cutting may be required.

4. Position and mount the field supplied duct over one of the other openings on the outlet of the air handler going to the top of the heat storage bin.

NOTE: The damper motor must be mounted in a position that results in the output shaft of the damper motor being in a horizontal position (i.e., damper blades must be parallel to the floor). All joints must be sealed air-tight with silicone caulking.

© copyright 1977 Solaron Corporation, Denver, Colorado

[2]

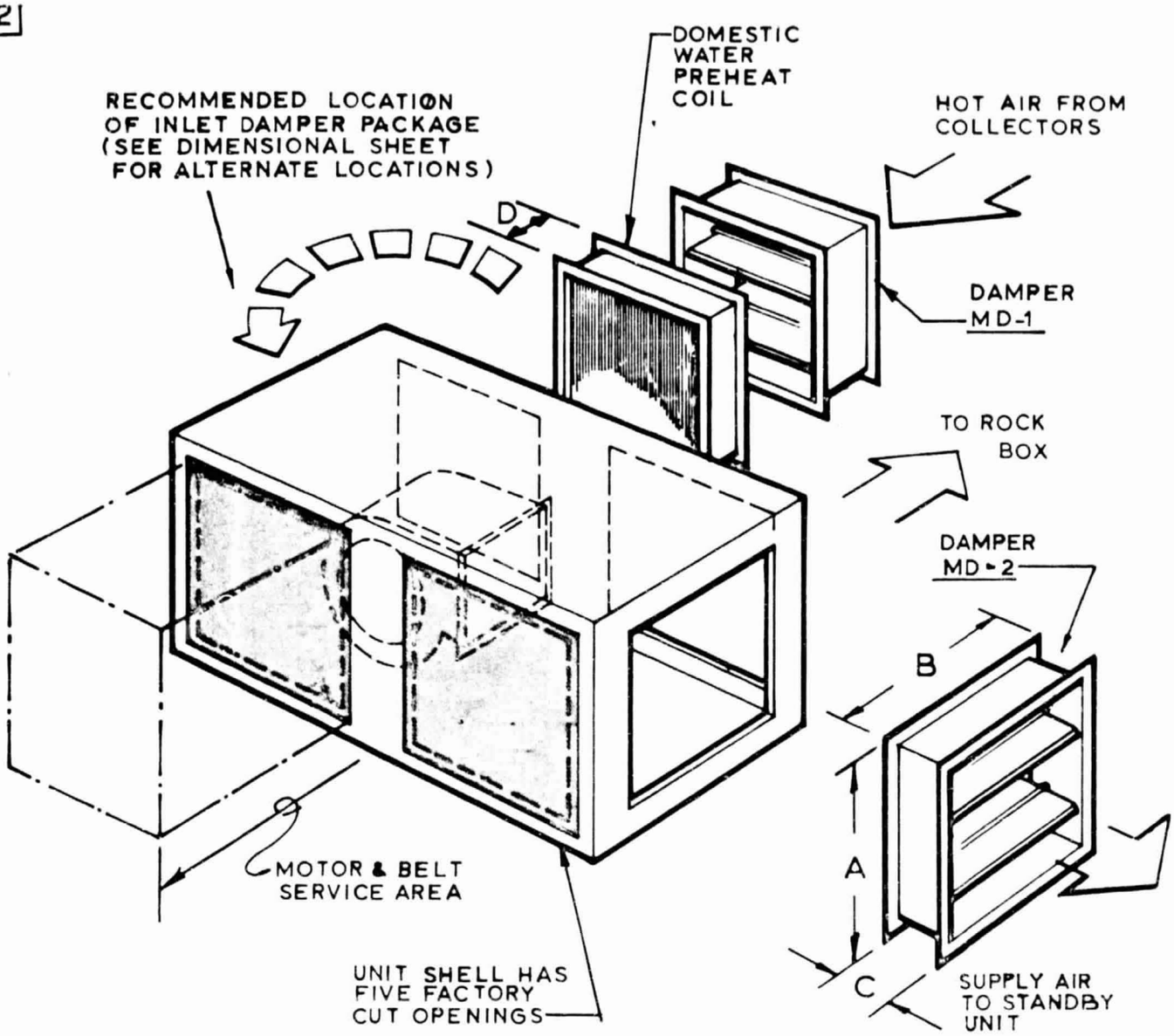

Model No.	DAMPERS DOM. WATER COIL			
	A	B	C	D
AU-0400	16"	16"	8"	6"
AU-0500	20"	20"	10"	6"

TWO COVER PANELS ARE WITH UNIT. ADDITIONAL PANELS MUST BE FIELD FABRICATED.

AU-0400 AND AU-0500 AIR HANDLING UNITS

DIMENSIONAL INFORMATION

The above drawing will furnish orientation information as well as essential dimensional data.

© copyright 1977 Solaron Corporation, Denver, Colorado

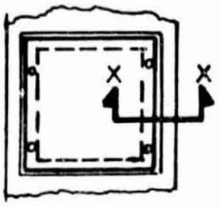

COVER PANEL
(2) SUPPIED

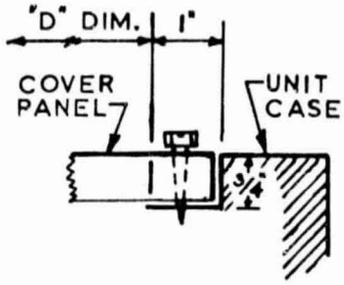

SECTION X-X

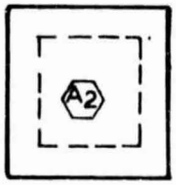

TOP

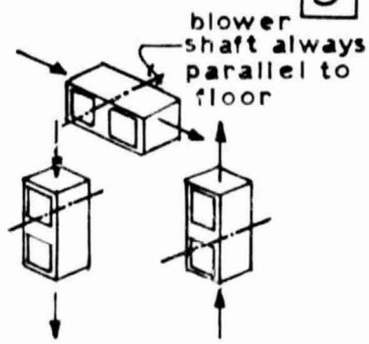

MOUNTING POSITIONS

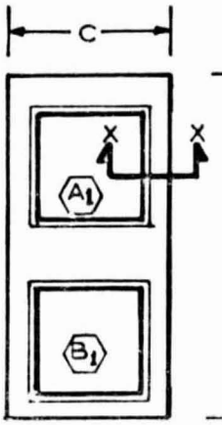

BACK

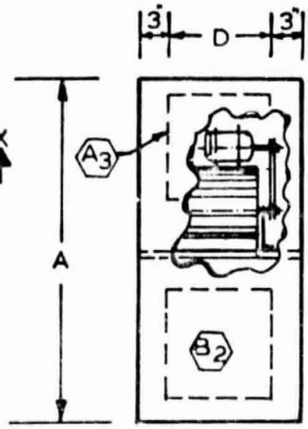

LEFT

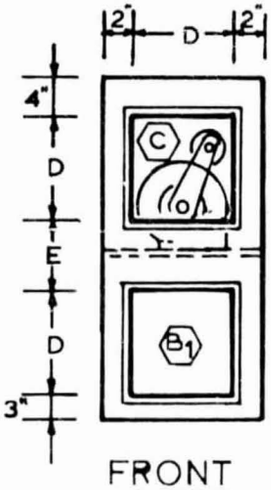

FRONT

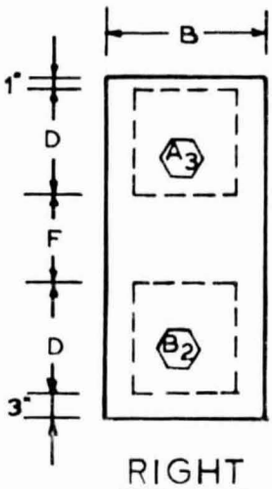

RIGHT

DIMENSIONS

UNIT	A	B	C	D	E	F
AU-0400	42	20	18	14	7	10
AU-0500	51	24	22	18	8	11

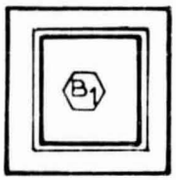

BOTTOM

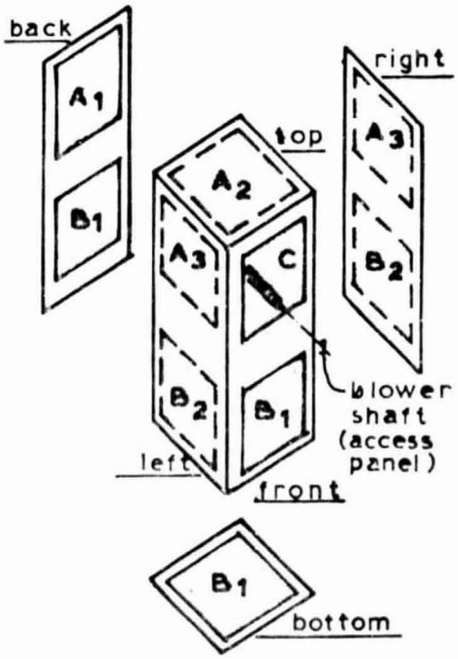

NOTES

INLETS

- A_1 FACTORY CUT (DO NOT USE)
- A_2 FIELD CUT (RECOMMENDED)
- A_3 FIELD CUT (8% FAN CAPACITY REDUCTION)

OUTLETS

- B_1 FACTORY CUT (STANDARD)
- B_2 FIELD CUT (OPTION)

C SERVICE ACCESS

FOR MOTOR AND DRIVE REMOVAL

AU0400 & AU0500 AIR HANDLING UNIT

© copyright 1977 Solaron Corporation, Denver, Colorado

4

Locate the filter "upstream" of backdraft damper BD-1 (and "by-pass" duct when used).

FILTERS

The Solaron air system requires a filter in the return air duct supplying air to the inlet side of the collector and the heat storage bin. A filter is not needed in the AU0400/AU0500 unit.

Should an electronic air cleaner be desired, install it in the return air duct mentioned above. DO NOT install on the inlet of the auxiliary furnace as the air temperatures at this location may exceed the electronic air cleaner's maximum operating temperature (usuall 125°F).

HUMIDIFIERS

Horizontally mounted type humidifiers are recommended. Locating the humidifier in a horizontal supply duct coming off of the auxiliary heating unit is ideal. Utilizing a sail-switch activated duct humidistat (similar to a Honeywell H49B) will simplify the wiring requirements of most installations.

DO NOT wire low voltage humidifiers or air cleaner relays in series with the thermostat wires (W_1 or W_2) as this can damage the Solaron controller. Sail or air pressure switches are recommended.

LOCATING THE THERMOSTAT

The Solaron multi-element thermostat should be located on an interior wall free from cold and warm drafts. Be sure adequate room air movement is present so the thermostat will provide a comfortable building temperature.

Do not locate the thermostat near lamps, heat outlets, stoves, refrigerators, television sets, etc. The heat given off by these appliances will not allow the thermostat to properly control the building temperature.

The thermostat heat anticipators should be set as follows: W_1 @ .10 amp, W_2 @ .10 amp.

© copyright Solaron Corporation, Denver, Colorado

SOLARON CONTROLLER & THERMOSTAT LIST

AU0400 and AU0500 air handler can be used in various applications.

Application	Solaron Controller	Thermostat & Sub-base	Additional Relays Needed
Heating Only	HC0115	HC0020 HC0040	(3)#SR0225 Relays 1-AU0400 Blower 1-Dom. Water Pump 1-Aux. Blower
Heating Only with continuous fan option	HC0115	HC0020 HC0041	(3)#SR0225 Relays Same as Above *(1)#SR0157 Relay
Heating/cooling with continuous fan option	HC0115	HC0022 HC0041	(3)#SR0225 Relays Same as Above *(1)#SR0157 Relay
Heat pump-reversing valve energized for heating	HC0116	HC0022 HC0042	(2)#SR0225 Relays 1-AU0400 Blower 1-Dom Water Pump
Heat Pump-reversing valve energized for cooling	HC0116	HC0023 HC0042	(2)#SR0225 Relays Same as Above

*Insert SR0157 relay into fourth base of HC0115

LOCATING THE SOLARON CONTROL PANEL

Mount the control panel in a convenient location that allows easy access for electrical wiring and "summer/winter" switch operation. Generally the mechanical room is the best location. Electrical service consisting of one 115 vac circuit is ample to power the 100 VA, 120 VAC/24 VAC transformer accompanying the control panel. Separate power circuits may be needed for the AU0400/AU0500 unit and the auxiliary heating unit (refer to local and national building codes).

Low voltage wiring is needed to connect the Solaron space thermostat to the Solaron control panel as well as between the auxiliary heating unit, damper motors and the control panel. Damper motors are low voltage.

The thermostat MUST be wired through the Solaron control panel, it CANNOT be wired direct to the auxiliary heating unit and Solaron air handling unit.

See instructions with each controller for specific directions and information on wiring schematics.

© copyright 1977 Solaron Corporation, Denver, Colorado

SOLAR SYSTEMS SENSORS

Sensors must be properly placed in the following locations before system start-up can be accomplished:

1. Tco - Sensor must be in absorber plate air channel (not in duct connection or manifold plenum).
2. Tci - Locate at junction of house return air duct and duct connecting to bottom of heat storage (for systems with by-pass of heat storage for summer water pre-heating, locate in duct to collector where by-pass tees in).
3. Ts - Top of rock in heat bin.
4. Tw - Locate in bottom of water storage tank (not the auxiliary water heater) near inlet of heat exchanger coil. (If using an unwired electric water heater for a storage tank, the thermostat in the tank can be used as Tw. Disconnect power leads from thermostat and power element and wire through terminals that "open" on temperature rise).

SYSTEM START-UP

Please review all steps before proceeding with the system start up of the Solaron Air Handler AU0400/AU0500.

1. Check for proper mounting of belt-drive motor (field installed).
2. Check belt tension.
3. Check pulleys for tightness on shafts.
4. Remove all tools, materials, etc. from inside unit.
5. Check auxiliary heating unit as per manufacturers recommendations.
6. Turn on power to solar air handling unit and controller.
7. Check rotation of solar air handler blower.
8. Turn on power to auxiliary heating unit.
9. Secure all access doors.
10. Check operation of all components and systems as per Solaron control instructions.
11. Give the system owner instructions on how to operate their new Solaron solar system.

© copyright 1977 Solaron Corporation, Denver, Colorado

BLOWER MOTOR AND DRIVE ASSEMBLY SELECTION PROCEDURE

1. Refer to building plans for air flow and static pressure requirements. Include pressure drop of all dampers and coils in system. (See Selection Example this Manual Pg. 10.)
2. Refer to the Air Delivery Table for each respective air handler:
   a. select the row which indicates that static pressure required, and
   b. select the column which shows the CFM required.
   The point where the row and column intersect will indicate what blower RPM and H.P. motor are needed to deliver the required air flow.

AU0400 AIR DELIVERY TABLE

"W.C." Ext. Static Pressure	CFM												
	1/4 H.P.					1/3 H.P.				1/2 H.P.		3/4 HP	
	300	400	500	600	700	800	900	1000	1100	1200	1300	1400	
.6	-	-	-	-	-	-	-	-	-	1055	1120	1150	
.8	1038	1041	1045	1045	1048	1058	1060	1092	1120	1156	1187	1235	
1.0	1185	1190	1157	1158	1158	1159	1160	1190	1220	1245	1280	1310	RPM
1.2	1300	1300	1295	1279	1265	1260	1270	1290	1310	1335	1360	1389	
1.4	-	1422	1405	1385	1375	1370	1370	1375	1400	1420	1455	-	

AU0500 AIR DELIVERY TABLE

"W.C" Ext. Static Pressure	CFM															
	3/4 H.P.							1 H.P.				1-1/2 H.P.				
	1200	1300	1400	1500	1600	1700	1800	1900	2000	2100	2200	2300	2400	2500	2600	
.8	-	-	-	-	-	-	1000	1021	1040	1064	1088	1116	1143	1171	1200	
1.0	1028	1032	1041	1043	1053	1064	1078	1093	1111	1132	1155	1181	1205	1234	1266	
1.2	1121	1122	1124	1127	1135	1143	1154	1167	1182	1200	1223	1248	1274	1307		RPM
1.4	1213	1212	1211	1213	1213	1220	1229	1240	1256	1273	1295	1318	1343			
1.6	1301	1295	1290	1280	1288	1292	1304	1313	1329	1345	1366	1388				
1.8	1383	1376	1367	1363	1363	1365	1376	1387	1400	1417						

© copyright 1977, 78 Solaron Corporation, Denver, Colorado

8

DRIVE ASSEMBLY SELECTION

Since the RPM is now known, merely refer to the Drive Assembly Table. Select the RPM needed in the left-hand column. To the right of the RPM column are other columns indicating the number of turns open a specific driver pulley must be in order to deliver that particular RPM. Select whichever column gives the RPM desired. The driven pully, or fixed blower pulley, is selected from the extreme right hand column. V-belts are noted under each "Driver" column. To determine bore sizes of driver pulleys refer to the Blower Motor Chart for shaft dimensions. Bore size for all fixed pulleys is 3/4" for the AU0400 and 1" for the AU0500.

AU0400 DRIVE ASSEMBLY TABLE

RPM	Browning VL-44 Driver ½" or 5/8" Bore	Browning VM50-Driver ½" or 5/8" Bore	Fixed Blower Pulley-Driven (Browning AK56) 3/4" Bore
1025	3½ Turns Open	- Turns Open	All RPM Ranges
1058	3 "	[illegible] "	"
1092	2½ "	[illegible] "	"
1125	2 "	[illegible] "	"
1157	1½ "	[illegible] "	"
1190	1 "	4 "	"
1224	½ "	3½ "	"
1257	0 "	3 "	"
1290	- "	2½ "	"
1323	- "	2 "	"
1356	- "	1½ "	"
1389	- "	1 "	"
1422	- "	½ "	"
1455	- "	0 "	"
V-Belt	4L350	4L360	

ORIGINAL PAGE IS
OF POOR QUALITY

RECOMMENDED SELECTION AREA IS NOT SHADED

AU0500 DRIVE ASSEMBLY TABLE

FAN RPM	Driver - Motor Sheave Browning VP50 (or VM50) X 5/8" (use w/3/4 or 1 H.P. motors)	Belt	Driver - Motor Sheave Browning VP56 X 5/8" (use w/1 or 1½ H.P. motors)	Belt	Driven - Fan Sheave Browning BK70
994	6 Turns Open	A	- Turns Open		All RPM Ranges
1021	5½ "	A	[illegible]		"
1048	5 "	B	[illegible]		"
1075	4½ "	B	[illegible]		"
1102	4 "	B	[illegible]		"
1129	3½ "	B	- [illegible]		"
1155	3 "	B	[illegible]		"
1182	2½ "	B	[illegible]		"
1209	2 "	B	5 "	C	"
1236	1½ "	C	4½ "	C	"
1262	1 "	C	4 "	C	"
1288	- "		3½ "	C	"
1315	- "		3 "	C	"
1341	- "		2½ "	C	"
1368	- "		2 "	C	"
1395	- "		1½ "	D	"
1421	- "		1 "	D	"

© copyright 1977 Solaron Corporation, Denver, Colorado

V-BELTS FOR AU0500			
V-Belts	A	5L420	Type V-Belts
	B	5L430	Type V-Belts
	C	5L440	Type V-Belts
	D	5L450	Type V-Belts

AU0400 AND AU0500 BLOWER MOTORS

H.P.	Serv Factor*	NEMA Frame	Shaft Dia. & Len.	F.L.A. 115V	G.E. Model	Shpg. Wt.
Split Phase Motors - 1725 RPM 115/230V - 60 HZ - 1Ø (Class A)						
1/4	1.35	48Z	½" X 2¼"	5.2	5KH33FN15T**	15 lbs.
1/3	1.35	56Z	½" X 2¼"	6.0	5KH35JN30T**	18 lbs.
1/2	1.25	56Z	½" X 2¼"	9.0	5KH36MN22T**	23 lbs.
Capacitor -Start Motors - 1725 RPM 115/230 - 60 HZ - 1Ø (Class B)						
3/4	1.25	56Z	5/8" X 2¼"	11.6	5KC39UN7T**	30 lbs.
1	1.25	56Z	5/8" X 2¼"	14.6	5KC48TG726T**	35 lbs.
1-1/2	1.15	56	5/8" X 1-7/16"	21.0	6K324	39 lbs.

The above General Electric "Serv-S-Line" or Dayton motors are 1725 RPM, 115/230 Volt, 60 HZ, 1 phase, automatic reset, thermally protected types recognized by UL under the Motor Component Recognition Program. These motors are open, drip-proof type motors with Class "A" or "B" insulation, ball bearings, resilient base. The motor rotation can be reversed by reconnecting various electrical leads within the motor.

* Motors operated on 200 volts, 60 HZ will have a 1.0 service factor.

** Manufacturers producing motors of equal specification may be used. CLASS B MOTORS ARE RECOMMENDED FOR REPLACEMENT.

© copyright 1977 Solaron Corporation, Denver, Colorado

19 Selection Example:

Given: 312 ft^2 solar collector area (i.e. 2 high, 8 wide, vertical)
Solution: Air handler flow rate (2 CFM/ft^2)(312 = 624 CFM, round up to 625 CFM

The air handler motor and drive assembly must be selected to handle the external static pressure on the Solaron air handler. This selection should be based on the mode which has the highest static pressure drop. The possible modes are:

1. Heating from collector
2. Storing heat
3. Heating domestic water

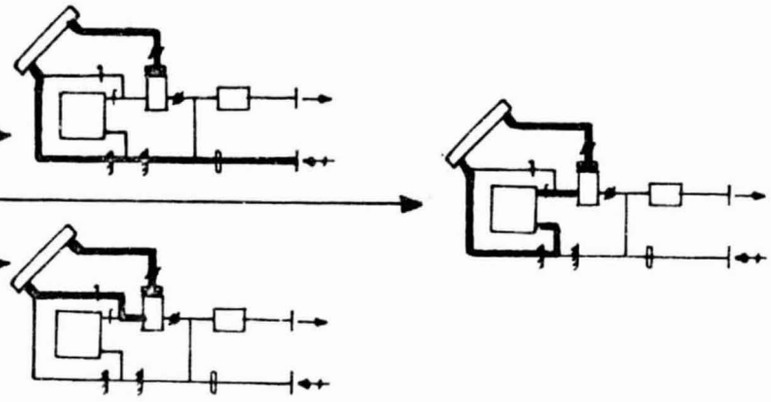

The highest pressure drop for this example is #1, heating from collectors. The external static pressure drop for this is:

Return grille (see mfg. data)	0.05" w.g.
Return air filter (sized @ 300 to 350 FPM) (see mfg. data)	0.25
Backdraft dampers (2 each) (see A&E Manual pg. 89)	0.20
Collectors (2 panels in series, 2 CFM/ft^2) (see A&E Manual, pg. 80)	0.23
Domestic water coil (see this Manual, pg. 11)	0.08
*Ductwork (see below)	0.19
External Static Pressure	1.00" w.g.

Motor: 625 CFM and 1.0" external static pressure
RPM would be 1158 (see AU0400 Air Delivery Table)
This falls in the region for the 1/2 H.P. motor.

Drive Assembly: 1158 RPM is required at the 700 CFM point. Select 1157 RPM for the 625 CFM requirement. This RPM would be obtained with the driver: Browning VL-44 set at 1-1/2 turns open.

Blower Pulley: Would be Browning AK-56.

Summary: 625 CFM at 1.0" external static pressure

1/2 H.P. motor	Solaron #MT0050	
Driver VL-44	Solaron #DR0120	)
Pulley AK-56	Solaron #DR0120	) Package
V-Belt 4 L 350	Solaron #DR0120	)

*Ductwork: Static pressure drop through the ductwork is determined by the length and number of fittings. Solaron recommends that ductwork be sized at 0.08" w.g. pressure drop per 100 ft of duct. Fittings and elbows can be estimated by using 15 ft equivalent length of duct for each elbow with turning vanes.

The example above was based on:

(10 elbows)(15' elbow)	=	150'
Length of ductwork	=	90'
Total equivalent length	=	240'

$$(240\ ft)\left(\frac{0.08"}{100\ ft}\right) = 0.192 \text{ w.g. pressure drop in ductwork}$$

© copyright Solaron Corporation, Denver, Colorado

DOMESTIC WATER COIL CAPACITIES

The Solaron domestic water coil is a 1-row copper tube coil.

Calculated coil capacities for size and CFM as listed: 1/2" tube, 10 FPI, one 1/2" inlet and one 1/2" outlet, aluminum fin stock .0055, copper tube .017", capacities based on 3 GPM, ENT. water 50°, E.A.T. 180°F.

AIR HANDLER	SIZE	CFM	FACE VELOCITY	WATER P.D. FT. @ 3 GPM	LV.W.	LV.A	BTU/HR.
AU0400	13 3/4 X 14	600	447	8.20	64.7	146.3	22,050
		800	597	8.20	67.0	150.7	25,500
		1000	746	8.20	69.1	153.7	28,650
AU0500	17 1/2 X 18	1400	642	13.40	80.7	151.7	46,050
		1700	780	13.40	83.9	152.6	50,700

NOTE: MINIMUM WATER FLOW IS 1.5 GPM

The Solaron domestic water heating option is designed to be used with pump #WP3060 (115/60/-Ø ---- .85 amp).

AU0400 - OPTIONAL DOMESTIC WATER HEATING COIL - PRESSURE DROP												
CFM	300	400	500	600	700	800	900	1000	1100	1200	1300	1400
Pres. Drop	.02	.03	.04	.05	.06	.08	.09	.11	.14	.17	.21	.25

AU0500 -											
CFM	1200	1500	1700	1900	2100	2300	2500				
Pres. Drop	.08	.09	.11	.14	.17	.25	.33				

© copyright Solaron Corporation, Denver, Colorado

GENERAL OPERATING PROCEDURE
FOR THE SYSTEM OWNER

SOLARON AU0400 AND AU0500 AIR HANDLERS

By simply adjusting the wall mounted thermostat you will be able to maintain a comfortably living or working environment.

By setting the switches located directly under the thermostat, and the sliding levers on top, you can select the type of operation you desire.

For winter heating set the top lever at the desired temperature that you wish to maintain. The thermostat will automatically operate the solar portion of your heating system as well as the auxiliary heating unit if conditions warrant its operation. Please do not "jiggle" the levers.

Should your space conditioning system feature cooling as well as heating, you merely move the switch underneath the thermostat to any desired position ("System Switch - Off - Heat - Auto - Cool). Locating the switch in the "Auto" position will permit the thermostat to automatically place the system in a heating or cooling mode of operation without further adjustment.

Space conditioning systems incorporating a heat pump heating and cooling auxiliary unit will have a thermostat switch position marked "Emerg. Heat". The only function of this switch is to provide emergency electric heat should the heat pump malfunction during a period of time when a serviceman is not readily available.

Nominal maintenance is required with this sytem. Please refer to "Maintenance Instructions" provided in the Installation Manual.

Please call your qualified Solaron serviceman should problems develop.

Installing Solaron Solar System Contractor

Name: _____

Address: _____

Phone: _____

The Solaron controller requires that its "Summer-Winter" switch be placed in the appropriate season position. When switching seasons it may be necessary to move some system dampers. Please have your installing contractor indicate these dampers to you.

Maintenance Instruction

The AU0400 and AU0500 require minimal upkeep for economical and long lasting operation.

Blower Type 1 - Permanently sealed bearings - no oil required.

Motor Type 2 - Blower Motor - Oil twice a year (#20 S.A.E. non-detergent oil).

Blower bearings - Permanently sealed - no oiling required.

V-Belt - Check wear and tension, replace if necessary.

Damper Motors - Oil with #10 S.A.E. non-detergent oil (similar to #465 Anderol or Goodlight #10 oil.) Twice a year.

Water Pump - The Grundfos circulator pump requires no oiling as it is water lubricated during normal operation.

DO NOT RUN PUMP DRY

© copyright 1977 Solaron Corporation Denver, Colorado

HEAT STORAGE INSTALLATION MANUAL

S.O.L.A.R. 200.10.002

COMMERCIAL HEAT STORAGE UNIT

STORAGE CAPACITY GREATER THAN 270 CU. FEET

SOLARON® INSTALLATION MANUAL

CORPORATION
Solar Energy Systems

300 GALLERIA TOWER, 720 S. COLORADO BLVD
DENVER, COLORADO 80222

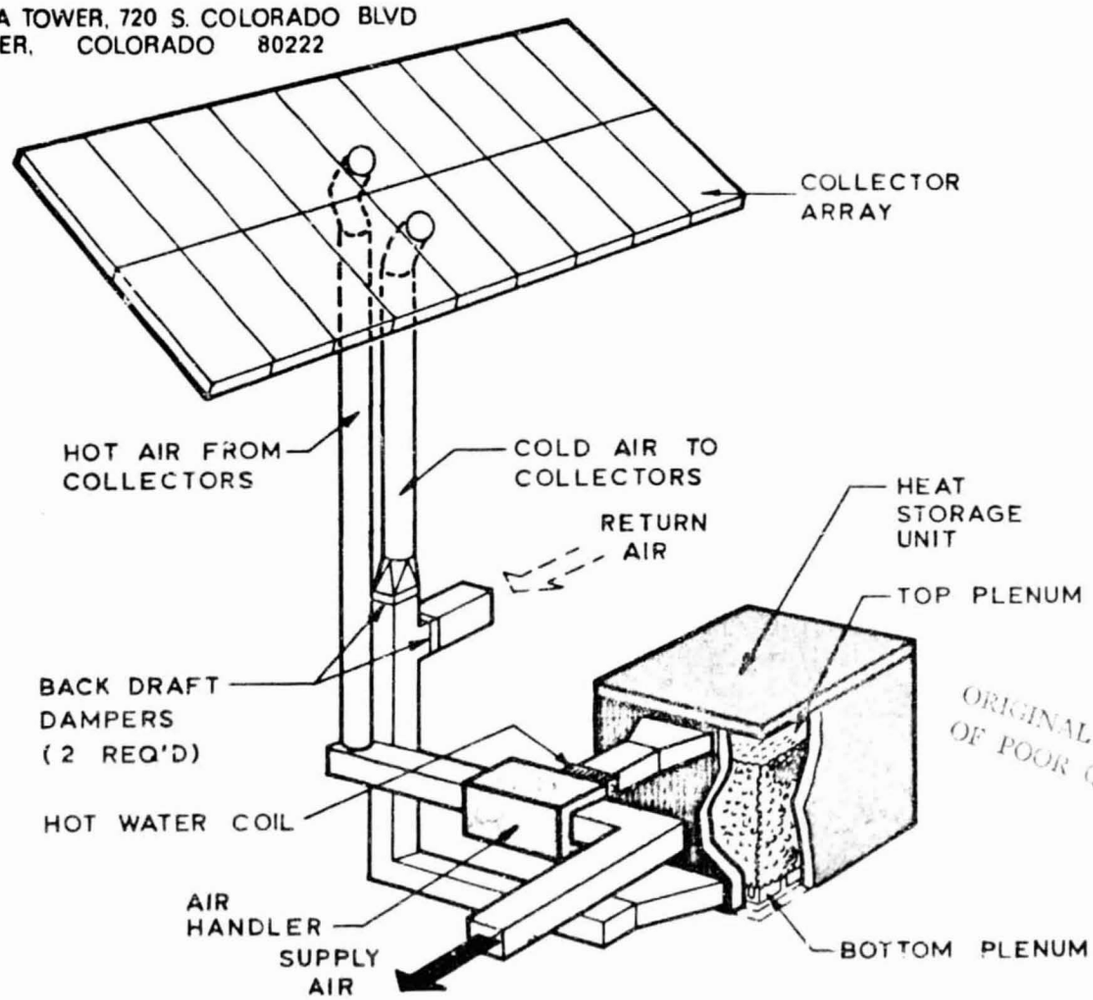

ORIGINAL PAGE IS OF POOR QUALITY

LT 3018

© Copyright May 1978 Solaron Corporation

SOLARON
CORPORATION
Solar Energy Systems

THIS MANUAL IS INTENDED TO BE USED ON PROJECTS WITH A MINIMUM COLLECTOR AREA OF 540 SQUARE FEET.

TO THE READER:

THIS MANUAL IS INTENDED TO BE A GENERAL GUIDE FOR SIZING AND BUILDING THE HEAT STORAGE UNIT FOR A SOLARON SOLAR HEATING SYSTEM. THE STORAGE UNIT FOR SPECIFIC PROJECTS SHOULD BE CHECKED TO ENSURE IT IS DESIGNED AND BUILT PROPERLY TO ACCOUNT FOR ALL THE VARIABLES INVOLVED.

The drawings, illustrations and text contained in this manual are protected by copyright. Publication, reproduction, or use of all or any part of this manual (except for actual construction and design use with Solaron systems engineering plans) without special written permission from Solaron Corporation, is prohibited.

Due to our policy of continual improvement to our products, Solaron reserves the right to change the materials, installation procedures and specifications without notice.

Solaron assumes no responsibility for improperly designed or constructed heat storage units where this manual is used as a guide.

SOLARON CORPORATION 300 GALLERIA TOWER 720 SO COLORADO BLVD DENVER COLORADO 80222
PHONE 303/759-0101
TWX 910-931-2580

KKBNA KETCHUM • KONKEL • BARRETT • NICKEL • AUSTIN, Inc. • Consulting Engineers

June 1, 1978

Solaron Corporation
300 Galleria Tower
720 S. Colorado Blvd.
Denver, Colorado 80222

Re: Solaron Installation Manual
Commercial Heat Storage Unit

Gentlemen:

Structural details and specifications contained in this manual are derived from engineering analysis and design calculations done by KKBNA, Consulting Engineers. These calculations are based on strength of materials and performance criteria in accordance with latest design standards and specifications.

The structural drawings, material and installation specifications in this manual have been reviewed to check their conformance to the design calculations.

Sincerely,

KKBNA, Inc.

Charles D. Keyes
Vice President

CHARLES D. KEYES REGISTERED 9130 PROFESSIONAL ENGINEER STATE OF COLORADO

CDK:et

TABLE OF CONTENTS

DESCRIPTION
GENERAL NOTES
HEAT STORAGE UNIT AND ROCK SIZING
HEAT STORAGE UNIT - CONCRETE CONSTRUCTION
HEAT STORAGE UNIT - WOOD CONSTRUCTION
HEAT STORAGE UNIT - ATTACHMENT DETAILS
OPTIONAL AIR HANDLER AND DUCT LOCATIONS
METAL LATH SAMPLE
BOND BEAM BLOCK AND TRANSITE DUCT DETAILS
ROCK AND SIZING METHOD
HEAT STORAGE UNIT CONSTRUCTION CHECKLIST

© Copyright May 1978 Solaron Corporation

DESCRIPTION

The use of pebbles in the heat storage unit is particularly effective with an air circulating solar heating system. The pebble bed maintains a high degree of temperature stratification (i.e., hot on top and cold on the bottom). This allows air to be provided at the highest available temperature to the heated space from the top of the pebble bed. It also allows air to return from the bottom of the bed to the collector at essentially room temperature, thus maximizing efficiency of solar heat collection and delivery.

The heat storage container can be constructed of any of the following materials:

a. Poured, reinforced concrete with a rigid fiberglass insulation inner liner (i.e., insulation is inside, separating the rock from the concrete wall).
b. Wood frame, plywood on 2 x 4 or 2 x 6 studs with a non-combustible inner liner suitable for temperatures as high as 200°F.

The heat storage unit should be built and installed by the local contractor to Solaron standard drawings and specifications. The air flow through the pebble bed must be vertical. Horizontal flow in pebble beds must be avoided due to channeling and "hot spot" problems.

It is important that the heat storage container be airtight and insulated as follows:

a. Storage unit inside a heated space: R-11 minimum.

b. Storage unit inside an unheated space: R-30 minimum.

c. Storage unit inside a heated space with wall in unheated area: R-30 minimum.

The heat storage unit can be conveniently placed in the basement or crawl spac or set into the ground. Buried heat storage units must be waterproofed on all buried external surfaces (do not use asphalt or other sealers on inside walls) DO NOT bury heat storage unit below the high ground-water level due to possibility of water leakage into heat storage unit and resulting loss of performa Support footings must be designed for local soil conditions. Due to the weig of the rocks, it should not be placed in the attic or on the upper floors wit out proper structural support. Typical floor loading with a rock depth of 5 feet is 500 pounds per square foot of floor area.

Design Criteria

Rock:
- Hard dense rock (i.e., density = 100 lbs./ft.^{3}, or greater).
- River gravel or hard, dense crushed rock is OK.
- Uniform size (i.e., most systems will use rock sized at 3/4" to 1-1/2" in diameter).
- Clean the rock before is is loaded in the storage box (i.e., wash it).
- Minimum of fines (i.e., 0 to 5%).

Storage:
- Airtight, insulated, structurally sound and, if buried, externally waterproofed. The inside surface materials mus : be able to withstand temperatures of approximately 200°F.

© Copyright May 1978 Solaron Corporation

GENERAL NOTES

1. ANY SUBSTITUTION OF MATERIALS, CHANGES OF DIMENSIONS OR OTHER CHANGES IN HEAT STORAGE UNIT AS SHOWN MUST BE APPROVED BY SOLARON CORPORATION IN WRITING PRIOR TO START OF CONSTRUCTION.

2. ALL FOOTING AND STRUCTURAL SUPPORTS ARE THE RESPONSIBILITY OF OWNER AND/ OR ARCHITECT AND SHALL BE SIZED ACCORDING TO SOIL REPORT INFORMATION. COORDINATE THIS DRAWING WITH ARCHITECTURAL DRAWINGS FOR TYPE, SIZE AND LOCATION OF FOOTING AND STRUCTURAL SUPPORTS.

3. JOINTS, CRACKS, SEAMS AND PENETRATIONS INSIDE AND OUT IN WALLS, FLOOR AND LID OF HEAT STORAGE UNIT SHALL BE SEALED AIR-TIGHT WITH DOW CORNING #732 SILICONE SEALANT CAULK OR APPROVED EQUAL.

4. BOND BEAM BLOCK - 2 OR 3 WEB. WEBS MUST BE AT A RIGHT ANGLE TO WALL CONTAINING BOTTOM OPENING (SEE DETAIL FOR TRANSITE DUCT AND BOND BEAM BLOCK ORIENTATION).

5. METAL LATH - USE JR. DIAMOND MESH 3.4 LB./SQ. YD. (GALVANIZED) ADJOINING PIECES TO BE OVERLAPPED A MINIMUM OF 6". TURN EDGE UP ONTO INNER WALLS OF HEAT STORAGE UNIT A MINIMUM OF 12".

6. THE ROCK SHALL BE ROUND WASHED RIVER ROCK OR STONE. 95% OF THE ROCK SHALL BE THE SIZE SHOWN ON THE PLANS WITH A MINIMUM AMOUNT OF FINES (I.E., LESS THAN 1/4" DIAMETER). THE ROCK SHALL BE CLEAN AND FREE OF DIRT. NORMALLY THE ROCK IS SIZED BY SCREENING (THAT ROCK WHICH PASSES THROUGH A 1-1/2" SCREEN BUT NOT A 3/4" SCREEN IS THE NORMAL SIZE).

7. TREATMENT FOR THE INSIDE SURFACES OF THE BOX SHALL BE SUITABLE FOR TEMPERATURES OF 200°F. NO COMBUSTIBLE MATERIAL WILL BE USED.

8. NON-LOAD BEARING LID SHALL BE CONSTRUCTED OF 1/2" EXTERIOR GRADE PLYWOOD INSIDE AND OUT--2 x 4'S - 24" ON CENTER AND 1/2" MOISTURE-RESISTANT TYPE "X" DRYWALL ON INSIDE SURFACE TOWARD PEBBLES. 28-GAUGE SHEET METAL CAN BE USED IN LIEU OF DRYWALL.

9. LOAD BEARING LID SHALL BE CONSTRUCTED OF 1/2" EXTERIOR GRADE PLYWOOD INSIDE AND OUT--2 x 6'S - 24" ON CENTER AND 1/2" MOISTURE-RESISTANT TYPE "X" DRYWALL ON INSIDE SURFACE TOWARD PEBBLES. 28-GAUGE SHEET METAL CAN BE USED IN LIEU OF DRYWALL.

HEAT STORAGE UNIT DESIGN PARAMETERS		
DESIGN TEMPERATURE TOP AND BOTTOM	PRESSURES	AIR FLOW
MAXIMUM TEMPERATURE (200°F)	ENTIRE STORAGE UNIT	THRU ROCK 20 TO 40 FPM
OPERATING RANGE (90° TO 180°)	ATMOSPHERIC PRESSURE ±3" W. C.	THRU OPENINGS 800 TO 1000 FPM
MINIMUM TEMPERATURE (AMBIENT)		

© Copyright May 1978 Solaron Corporation

GENERAL NOTES

(continued)

9. CONCRETE:

   A. ALL CONCRETE SHALL ATTAIN 3,000 PSI ULTIMATE COMPRESSIVE STRENGTH IN 28 DAYS.

   B. ALL REINFORCING SHALL BE HIGH STRENGTH DEFORMED BARS ASTM DESIGNATION A615, GRADE 40 OR GRADE 60.

10. STEEL:

    ALL STRUCTURAL STEEL SHALL CONFORM TO ASTM SPECIFICATION A36.

11. MASONRY:

    A. ALL MORTAR SHALL DEVELOP 1,800 PSI ULTIMATE COMPRESSIVE STRENGTH IN 28 DAYS.

    B. ALL MASONRY SHALL DEVELOP 1,500 PSI ULTIMATE COMPRESSIVE STRENGTH IN 28 DAYS.

    C. ALL REINFORCING SHALL CONFORM TO ASTM 615, GRADE 40 OR GRADE 60.

12. WOOD:

    A. ALL FRAMING LUMBER SHALL BE DRY HEM-FIR GRADE 2.

    B. ALL PLYWOOD SHALL BE OF THICKNESS SPECIFIED C-C EXT DFPA OR BETTER. NAILED TO SUPPORTS WITH 10d NAILS SPACED 6" O.C. AT PANEL EDGES AND SPACED 12" O.C. AT ALL OTHER SUPPORTS. PLYWOOD SHALL BE APPLIED WITH FACE GRAIN PERPENDICULAR TO SUPPORTS.

13. TRANSITE DUCT:

    TRANSITE DUCT CAN BE USED INSTEAD OF THE EXTERNAL BOTTOM DUCT OPENING TO ALLOW AIR FLOW TO AND FROM THE BOTTOM OF THE HEAT STORAGE UNIT WITHOUT PENETRATING THE UNIT OR RUNNING AN EXTERNAL DUCT. EXAMPLE: WHEN MECHANICAL EQUIPMENT IS INSTALLED ON TOP OF THE HEAT STORAGE UNIT OR WHEN THE HEAT STORAGE UNIT IS BURIED.

ONE 16" DIAMETER DUCT SERVES 270 CU. FT. OF STORAGE AT 1,080 CFM.
TWO 16" DIAMETER DUCTS SERVE 540 CU. FT. OF STORAGE AT 2,160 CFM.
THREE 16" DIAMETER DUCTS SERVE 810 CU. FT. OF STORAGE AT 3,240 CFM.

© Copyright May 1978 Solaron Corporation

HEAT STORAGE UNIT AND ROCK SIZING SHEET

a. VOLUME: Storage size is determined from the collector area. 1/2" $ft.^3$ to 3/4" $ft.^3$ of rock is required per $ft.^2$ of collector area.

Collector Area = _____ $ft.^2$

Volume = (_____ $ft.^3/ft.^2$)(_____ $ft.^2$ collector) = ... [$ft.^3$]

(_____ $ft.^3$)(100 lbs./$ft.^3$)(1 ton/2,000 lbs.) = ... [tons]

(_____ $ft.^3$) ÷ 27 $ft.^3$/cu. yd. = ... [cu. yds.]

b. DIMENSIONS:

(_____ $ft.^3$) ÷ (_____* ft. rock depth) = ... [$ft.^2$ floor area]

Storage unit inside dimensions = _____ ft. long x _____ ft. wide

Minimum dimension of 3' for length or width

c. ROCK SIZE: (see chart below)

(_____ cfm) ÷ (_____ $ft.^2$ floor area) = ... [rpm]

_____ fpm } = 3/4" to 1-1/2" Ø rock and _____" w.g. static pressure drop thru rock

_____ ft. rock depth }

d. AIR INLET/OUTLET SIZES: Size duct connections at 800 to 1,000 fpm

Top: _____" high x _____" wide

Bottom: 8 " high x _____" wide

(NOTE: Bottom opening must always be at least twice as wide as top opening to account for restriction caused by bond beam block. Optional top opening as per pages 6 and 13.)

The following data should be used to determine the proper combinations of rock size and rock depth. Minimum allow. static pressure loss 0.12" w.g.

STATIC PRESSURE LOSS THRU PEBBLE BED STORAGE UNIT (INCHES W.G.)				
FACE VELOCITY ACROSS ROCK BOX →		20 FPM	25 FPM	30 FPM
ROCK DEPTH-FEET	ROCK SIZE			
5'	3/4" to 1-1/2"	0.12"	0.22"	0.31"
6'	3/4" to 1-1/2"	0.14"	0.23"	0.34"
7'	3/4" to 1-1/2"	0.17"	0.27"	0.40"

* 5'0" minimum depth for commercial unit; 7'0" maximum rock depth.

© Copyright May 1978 Solaron Corporation

HEAT STORAGE UNIT SIZING

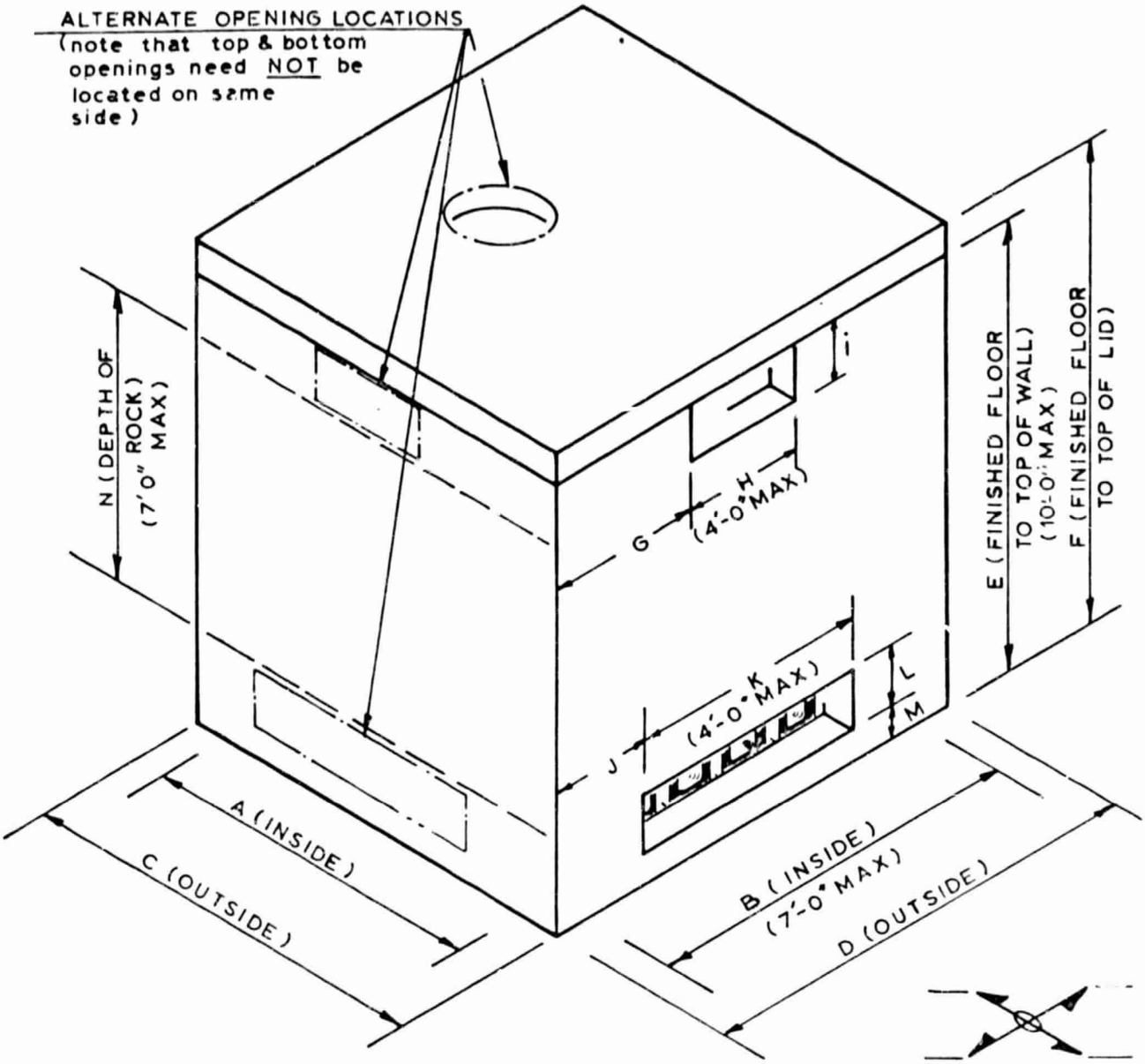

_____ TONS OF ROCK (100 lbs. per CU. FT.)

_____ CU. FT. ROCK (A x B x N)

ORIENTATION

DIMENSIONS					
A		F		K	
B		G		L	8"
C		H		M	
D		I		N	
E		J			

NOTE: 14" x 14" high sidewall opening location can be used when air handler outlet is mounted directly to box.

© Copyright May 1978 Solaron Corporation

COMMERCIAL HEAT STORAGE UNIT

CONCRETE CONSTRUCTION

1. WALL CONSTRUCTION TO BE 8" MINIMUM REINFORCED CONCRETE.

   VERTICAL AND HORIZONTAL RE-BAR:

   A. 4 - #5 RE-BAR CONTINUOUS 2 EACH FACE.

   B. #4 RE-BAR AT 8" O.C. VERTICAL IN OUTSIDE FACE.

   C. #5 RE-BAR AT 8" O.C. HORIZONTALLY FOR 8" THICK WALLS.

   D. DOWEL WALL TO FLOOR WITH ONE OF THE FOLLOWING:

      1. #4 RE-BAR "L" 1'-6" x 1'-6" AT 16" O.C.
      OR
      2. 5/8" Ø x 8" HEADED ANCHOR BOLT W/NUT AT 18" O.C.
      OR
      3. 5/8" Ø EXPANSION ANCHOR W/5" BOLT AT 24" O.C.

      CENTER ANY OF THE OPTIONS ON WALL.

2. FORM OUT FOR BOTTOM AND TOP OPENINGS AS REQUIRED FOR A GIVEN APPLICATION WITH 2 X DIMENSION LUMBER WHICH SHOULD BE LEFT INTACT WHEN FORMS ARE REMOVED TO PROVIDE MOUNTING FRAME FOR DUCTWORK. PLACE TWO #5 RE-BARS (1 ON EACH FACE) WITH 2'-0" PROJECTION AROUND ALL OPENINGS IN CONCRETE. PROTECT WOOD FRAMING FROM AIRSTREAM WITH SHEET METAL COLLAR OR GYP BOARD. THE FINISHED FRAMED INSIDE DIMENSION SHOULD BE THE SAME SIZE AS THE DUCT. SEE EXAMPLE BELOW:

   EXAMPLE: FOR AN 8" x 20" DUCT, THE OPENING SHOULD BE

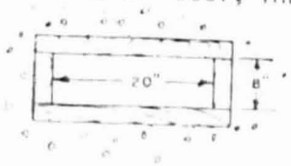

3. INSULATE INTERIOR SURFACE WITH 2" RIGID FIBERGLASS BOARD INSULATION (6 LB. DENSITY WITH R-8 MINIMUM), "CERTAIN-TEED #IB600, 2" PLAIN. SECURE TO WALL. DO NOT USE STYROFOAM OR URETHANE INSULATION.

5. INSTALLATION SHALL COMPLY WITH ALL APPLICABLE NATIONAL AND LOCAL BUILDING CODES.

© Copyright May 1978 Solaron Corporation

COMMERCIAL
HEAT STORAGE UNIT
CONCRETE

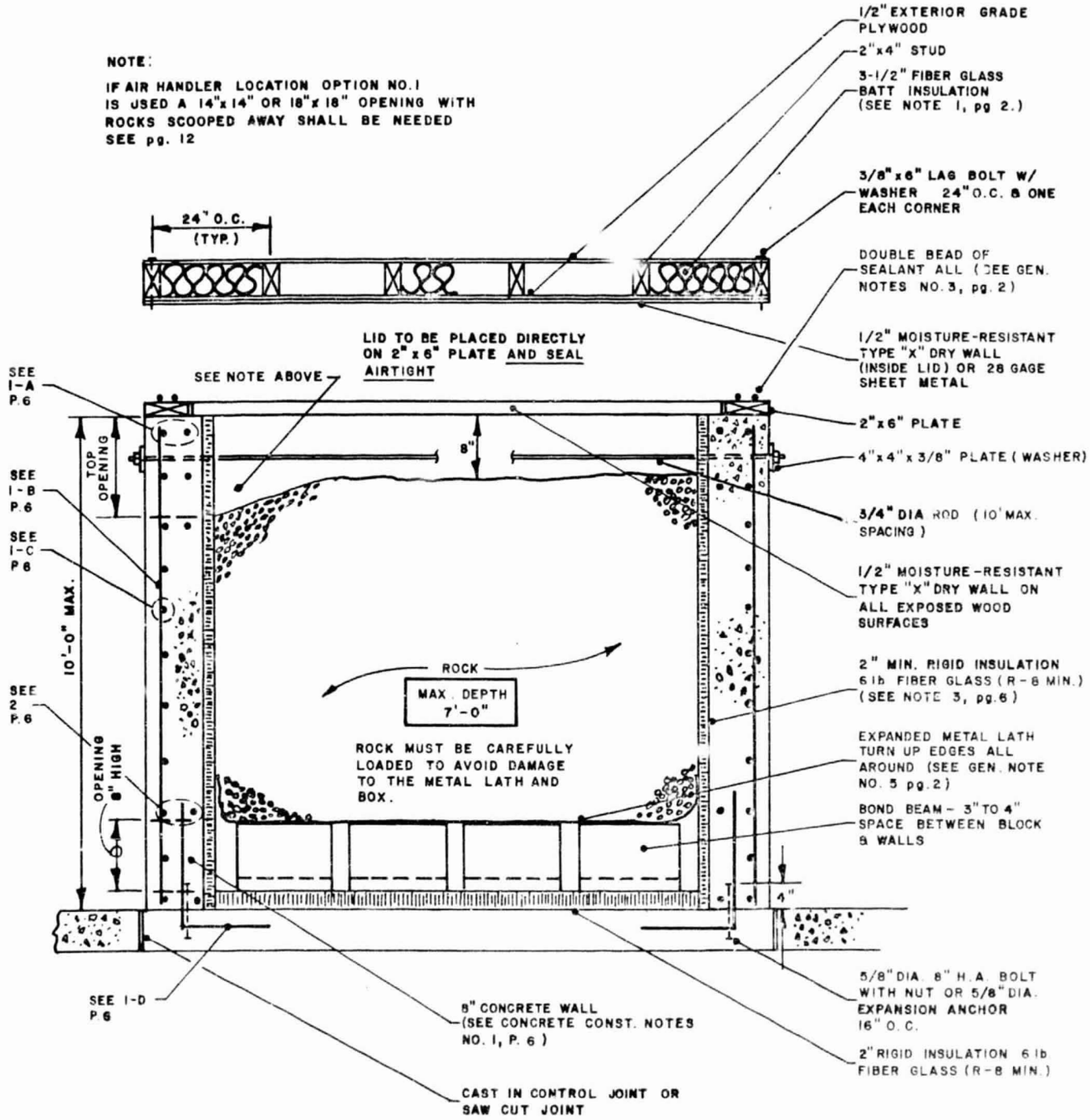

NOTE: INSULATION R-11 MIN. (R-30 IN UNHEATED AREA)

© Copyright May 1978 Solaron Corporation

COMMERCIAL HEAT STORAGE UNIT

WOOD CONSTRUCTION

1. WALL CONSTRUCTION TO BE SINGLE 2" x 8" NAILED VERTICALLY 16" O.C. (NO TOE NAILING). VERTICAL 2" x 8" AT CORNER TO BE NAILED. A SINGLE 2" x 8" HORIZONTAL BEAM WILL BE NAILED IN (USING 'SIMPSON' LU 26 JOIST HANGER AT EACH VERTICAL STUD) 6'-0" FROM FLOOR ALL AROUND. A DOUBLE 2" x 8" BEAM HORIZONTAL AT TOP AND BOTTOM TO BE NAILED IN (USING 'SIMPSON' LU 26 JOIST HANGER AT EACH VERTICAL STUD). THE INLET AND OUTLET OPENING TO BE FRAMED WITH 2" x 8" BLOCKING; OUTSIDE DRYWALL SHEATHING TO BE INSTALLED AFTER WALL FRAMING IS SET, ANCHORED AND INSULATED. INSIDE SHEATHING TO BE 1/2" EXTERIOR GRADE PLYWOOD OVERLAID WITH 1/2" TYPE X DRYWALL (ALL SEAMS TO BE CAULKED WITH DOW CORNING 732 SILICONE SEALANT. 28-GA. SHEET METAL MAY BE SUBSTITUTED FOR THE DRYWALL. ROCK BOX MUST BE AIRTIGHT; SEAL ALL JOINTS.

2. INSULATE ALL VOIDS WITH 3" TO 3-1/2" FIBERGLASS BATT INSULATING (R-11 MINIMUM). ADDITIONAL INSULATION REQUIRED WHEN PEBBLE BED IS LOCATED IN AN UNHEATED SPACE (R-30 MINIMUM). DO NOT USE STYROFOAM OR URETHANE INSULATION AS BED INNER LINER.

3. TIE RODS RUNNING IN EACH DIRECTION HORIZONTALLY FROM FLOOR (6'-0") THROUGH WALL SHALL BE STEEL TIE RODS 7/8" DIA. THERE SHALL BE TWO 5" x 6.7# CHANNEL STEEL BEAMS ON TOP AND BOTTOM OF TIE ROD WHERE THE ROD PENETRATES OUTSIDE OF WALL. AT POINT OF TIE ROD CONTACT WITH CHANNEL STEEL BEAMS SHALL BE A 3/8" x 3" x 3" STEEL PLATE WELDED TO THE TWO CHANNEL BEAMS WITH A BOLT AND NUT AT EACH END OF TIE RODS. PRETENSION RODS UNTIL WALL CENTERS HAVE CONCAVED INWARD APPROXIMATELY 1/8" BEFORE APPLYING SEALANT TO JOINTS.

4. INSTALLATION SHALL COMPLY WITH ALL APPLICABLE NATIONAL AND LOCAL BUILDING CODES.

© Copyright May 1978 Solaron Corporation

COMMERCIAL
HEAT STORAGE UNIT
WOOD

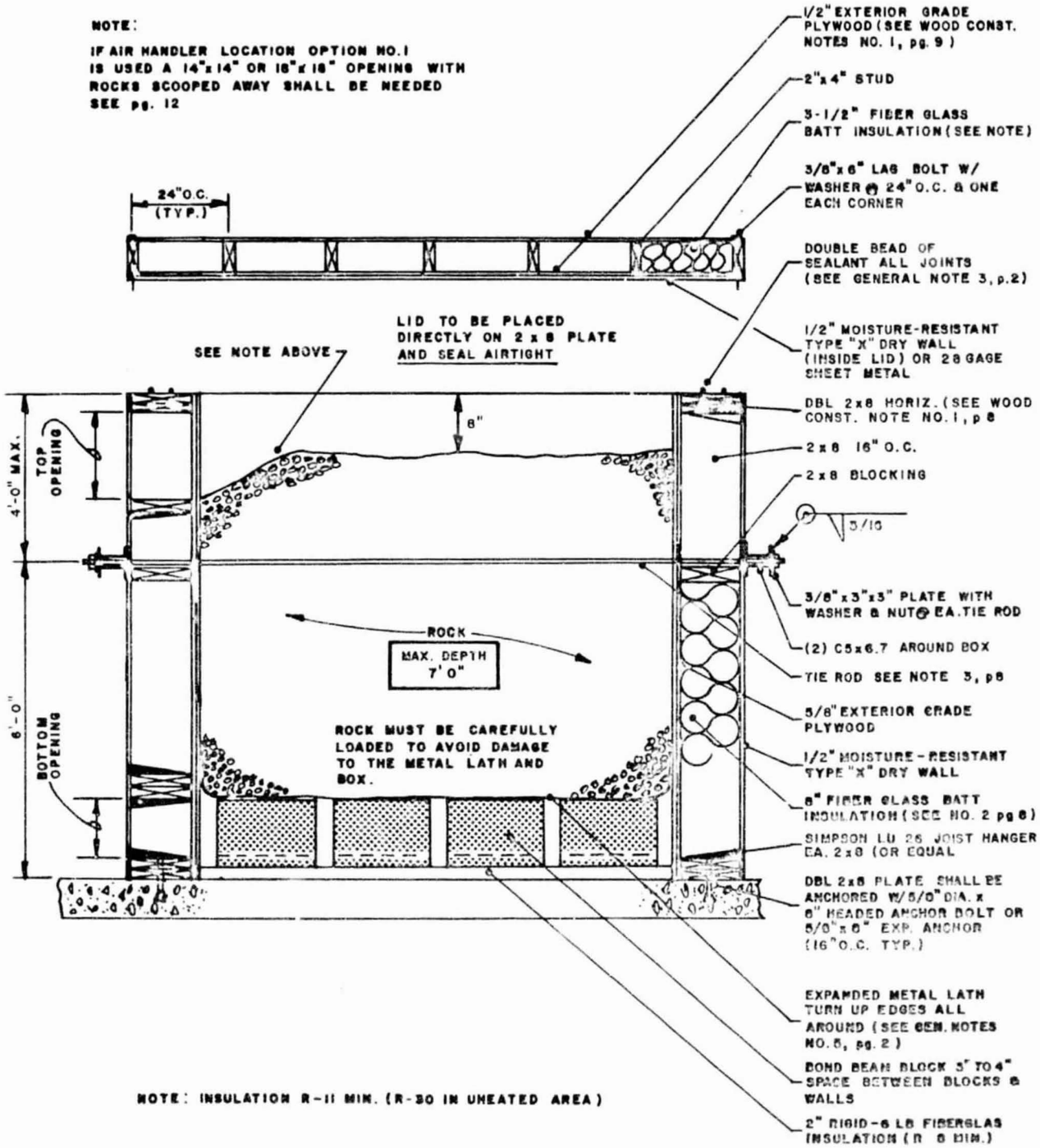

NOTE: INSULATION R-11 MIN. (R-30 IN UNHEATED AREA)

NOTE: INTERIOR SURFACES AND INSULATION OF ROCK BOX MUST BE NON-COMBUSTIBLE AND SUITABLE FOR TEMPERATURES UP TO 200° F.

© Copyright May 1978 Solaron Corporation

COMMERCIAL
HEAT STORAGE UNIT
WOOD

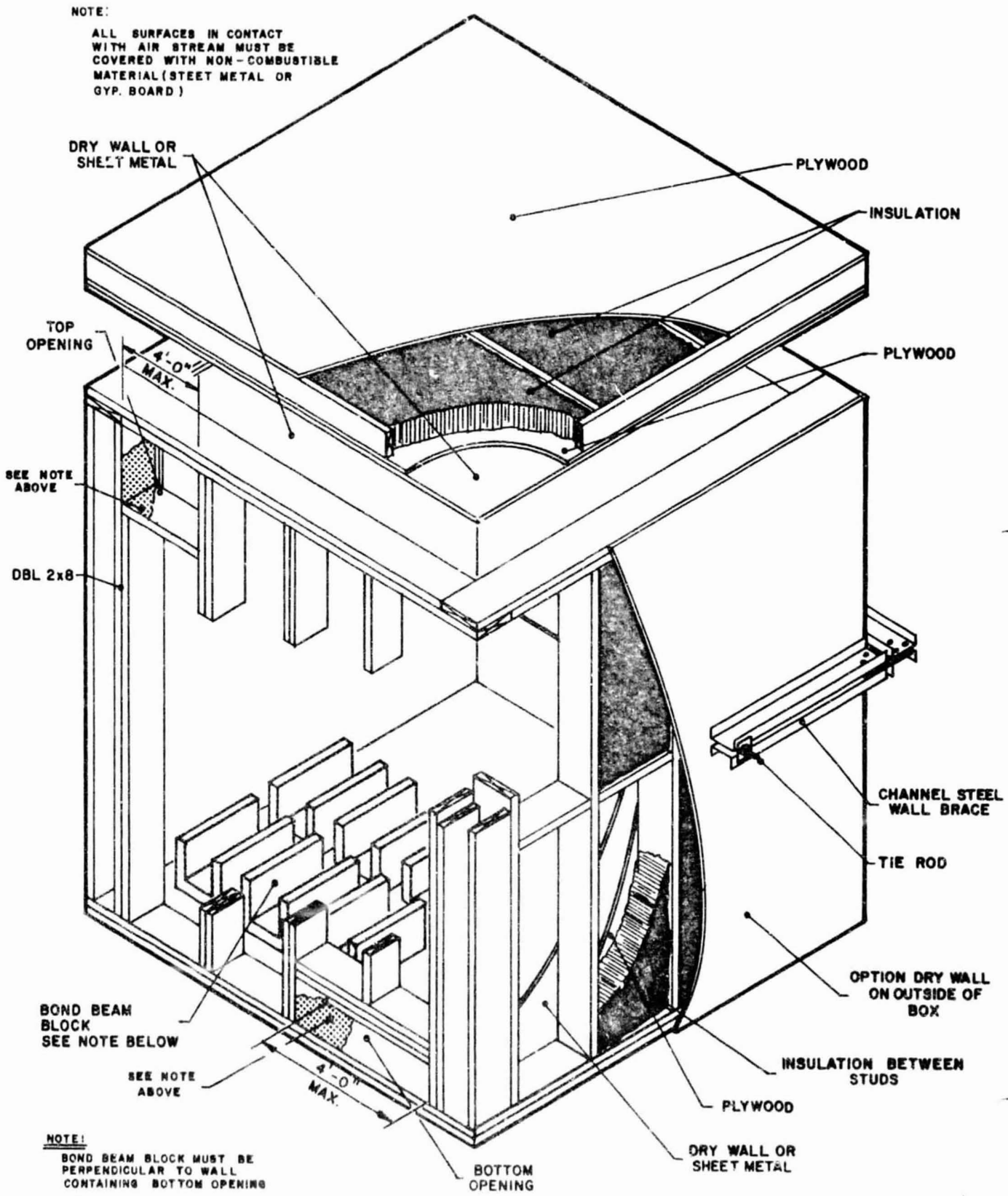

© Copyright May 1978 Solaron Corporation

COMMERCIAL HEAT STORAGE UNIT ATTACHMENT DETAILS

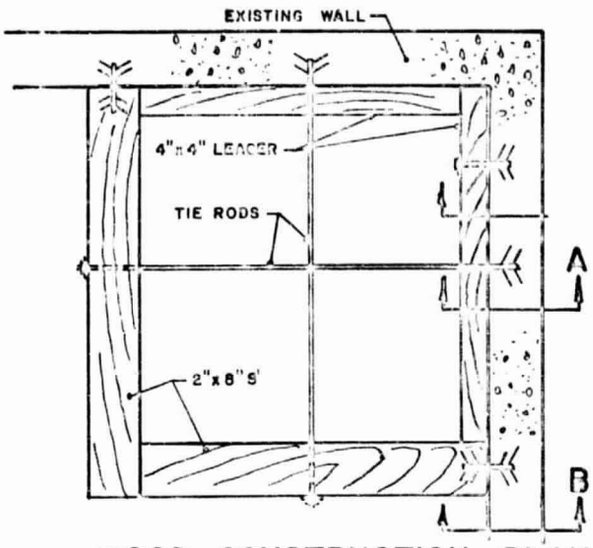

WOOD CONSTRUCTION PLAN

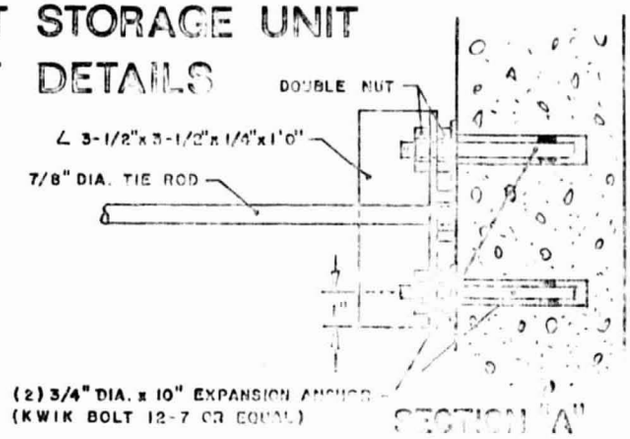

SECTION "A"

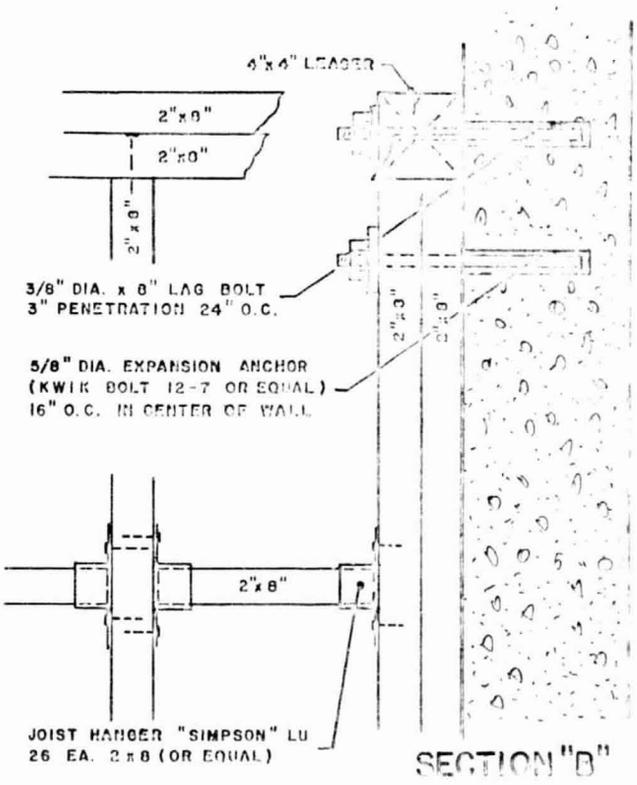

SECTION "B"

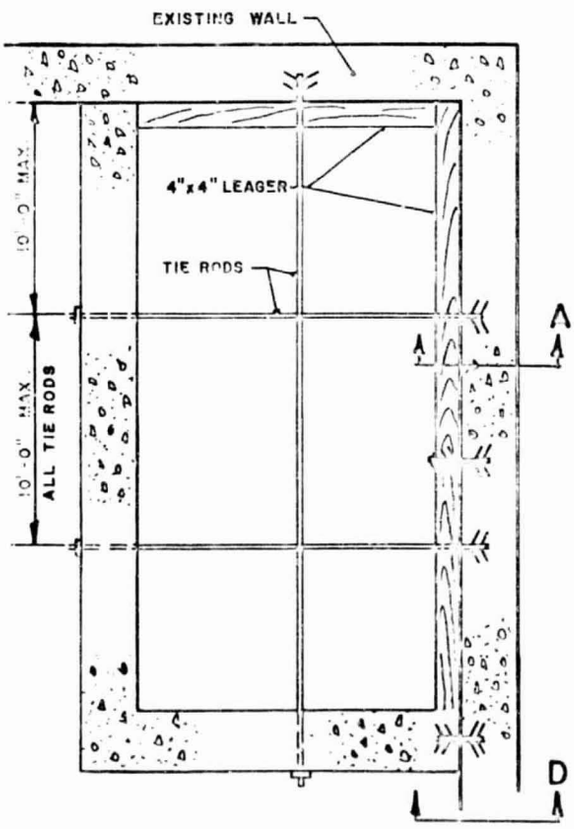

CONCRETE CONSTRUCTION PLAN

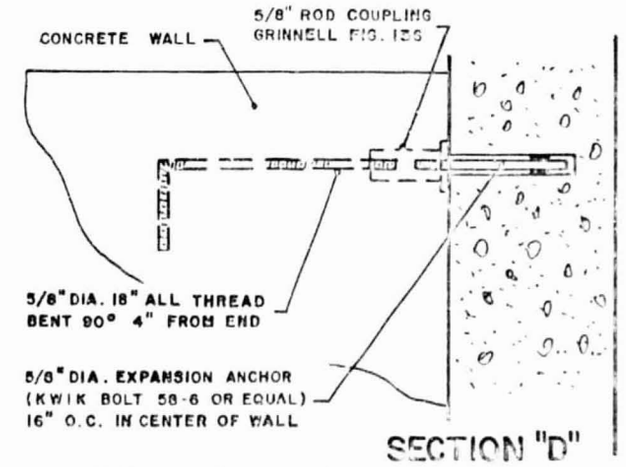

SECTION "D"

© Copyright May 1978 Solaron Corporation

ORIGINAL PAGE IS
OF POOR QUALITY

OPTIONAL AIR HANDLER & DUCT LOCATIONS

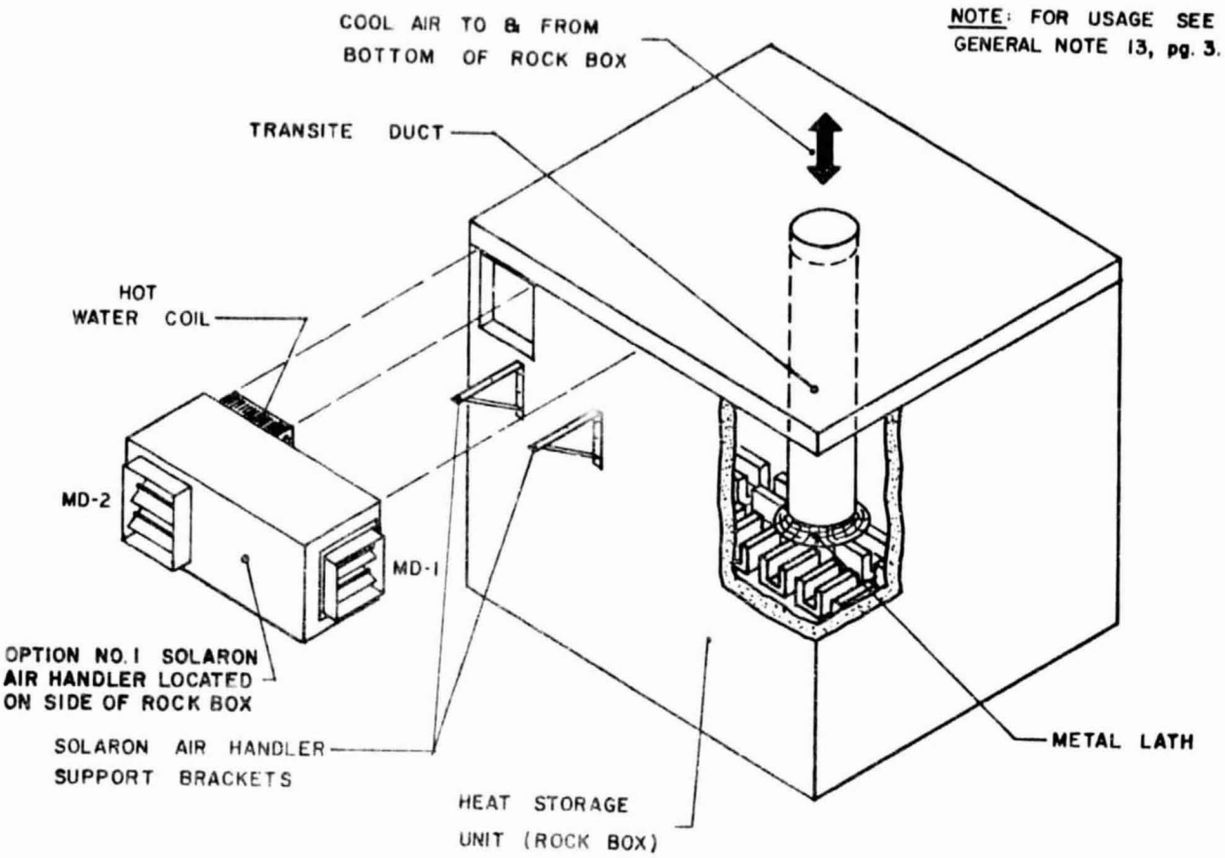

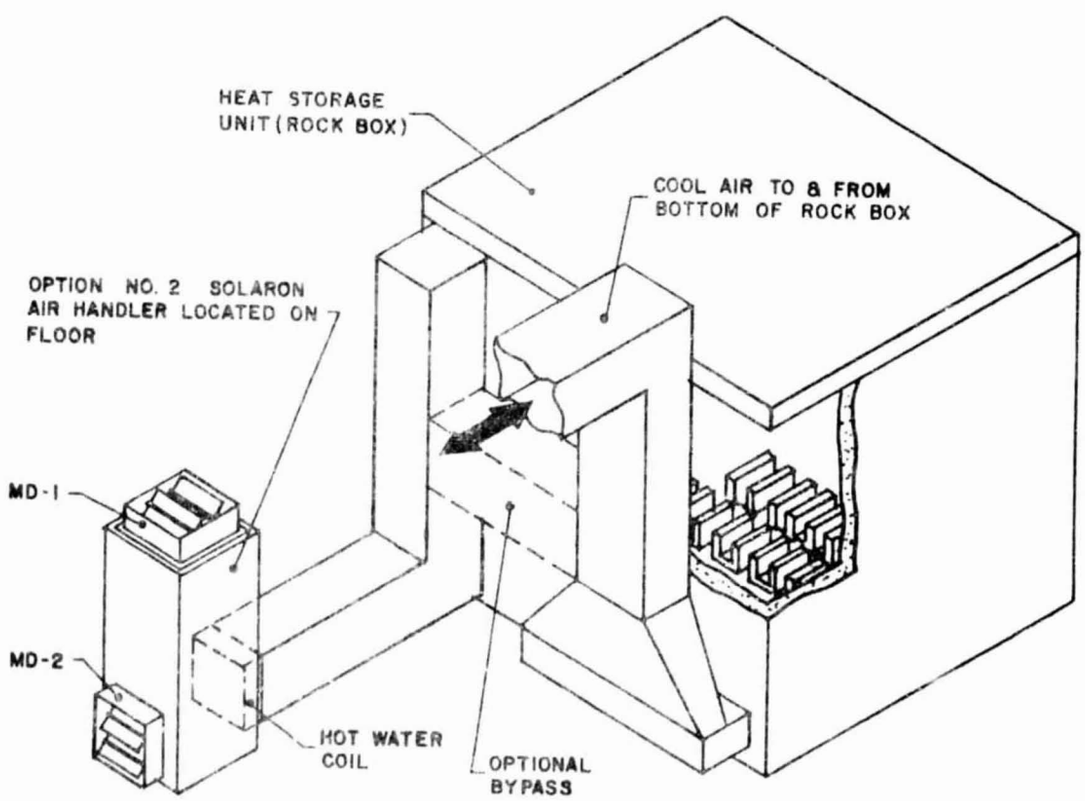

© Copyright May 1978 Solaron Corporation

METAL LATH SAMPLE

(MUST BE GALVANIZED)

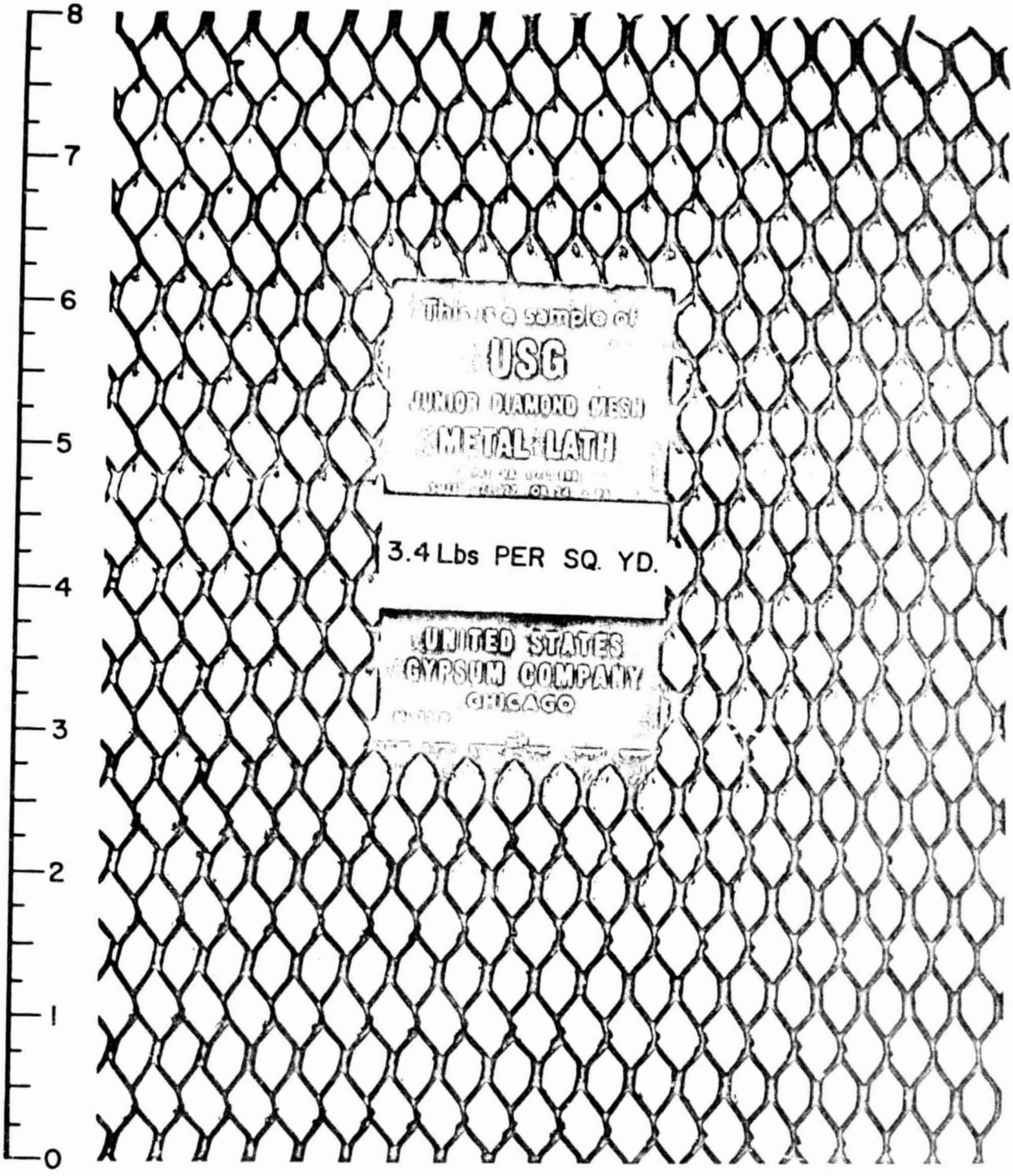

ORIGINAL PAGE IS
OF POOR QUALITY

© Copyright May 1978 Solaron Corporation

BOND BEAM BLOCK & TRANSITE DUCT DETAILS

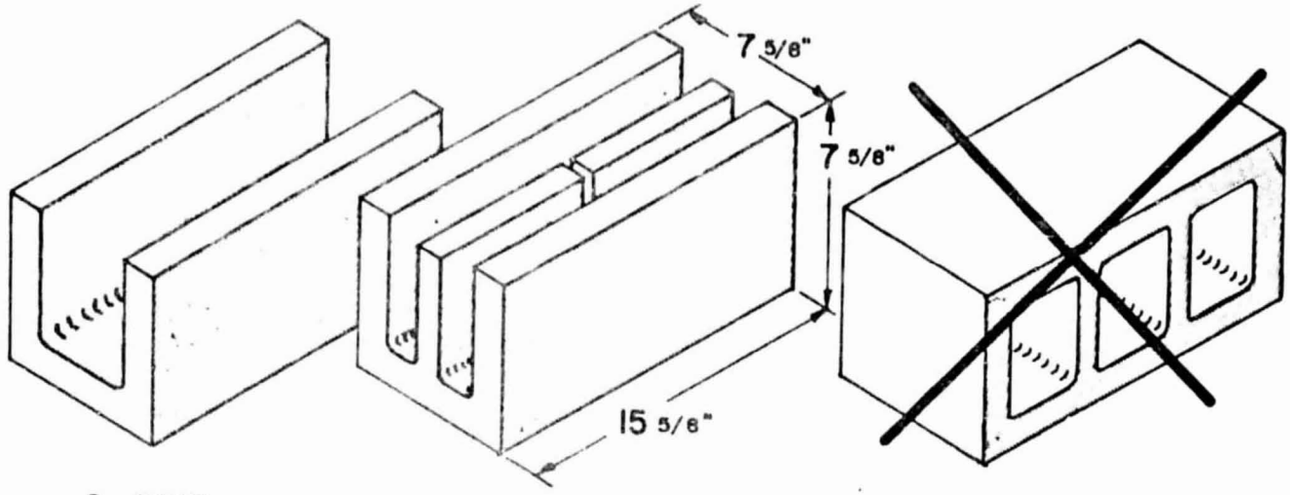

2 WEB

3 WEB

BOND BEAM BLOCK

DO NOT USE STANDARD BLOCK

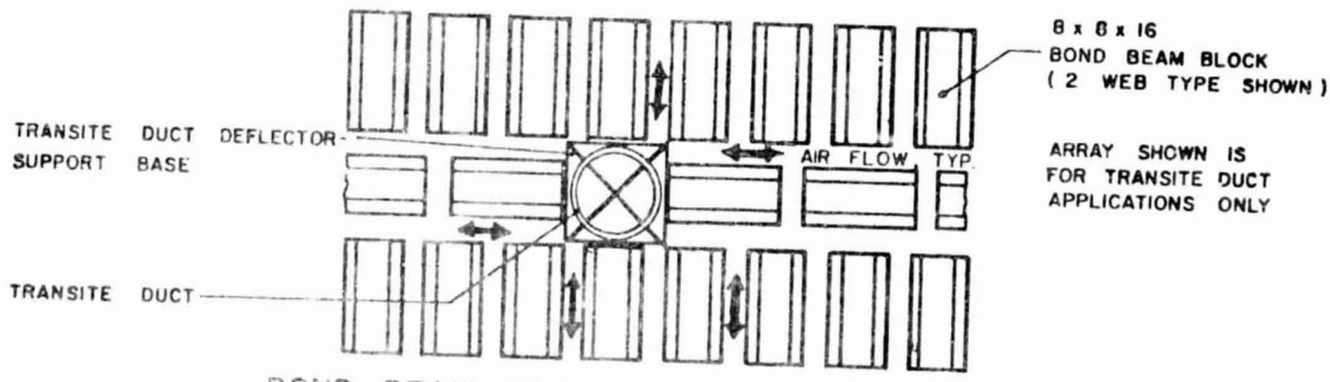

BOND BEAM BLOCK ARRAY - PLAN VIEW

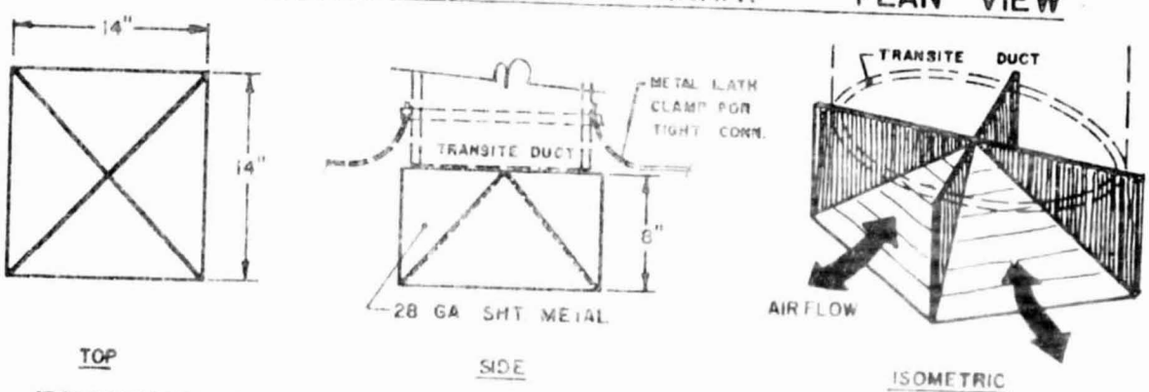

TOP

SIDE

ISOMETRIC

TRANSITE DUCT DEFLECTOR - SUPPORT BASE

© Copyright May 1978 Solaron Corporation

ROCK & SIZING METHOD

ANY ROCK USED IN THE HEAT STORAGE UNIT MUST BE CLEAN AND CONTAIN LESS THAN 5% FINES. ROUND RIVER BED ROCK OF A GRANITE TYPE IS PREFERRED. HOWEVER, FRACTURED HARD ROCK MAY BE USED.

WASH ALL ROCK BEFORE IT IS INSTALLED IN THE HEAT STORAGE UNIT. WASHING MAY TAKE PLACE AT THE QUARRY OR AT THE JOB SITE. ROCK MAY BE POURED INTO PLACE WHILE IT IS DAMP BUT SHOULD NOT BE DRIPPING WATER. UNDER NO CIRCUMSTANCES SHOULD ROCK BE WASHED AFTER IT IS IN PLACE.

ROCK SIZING METHOD

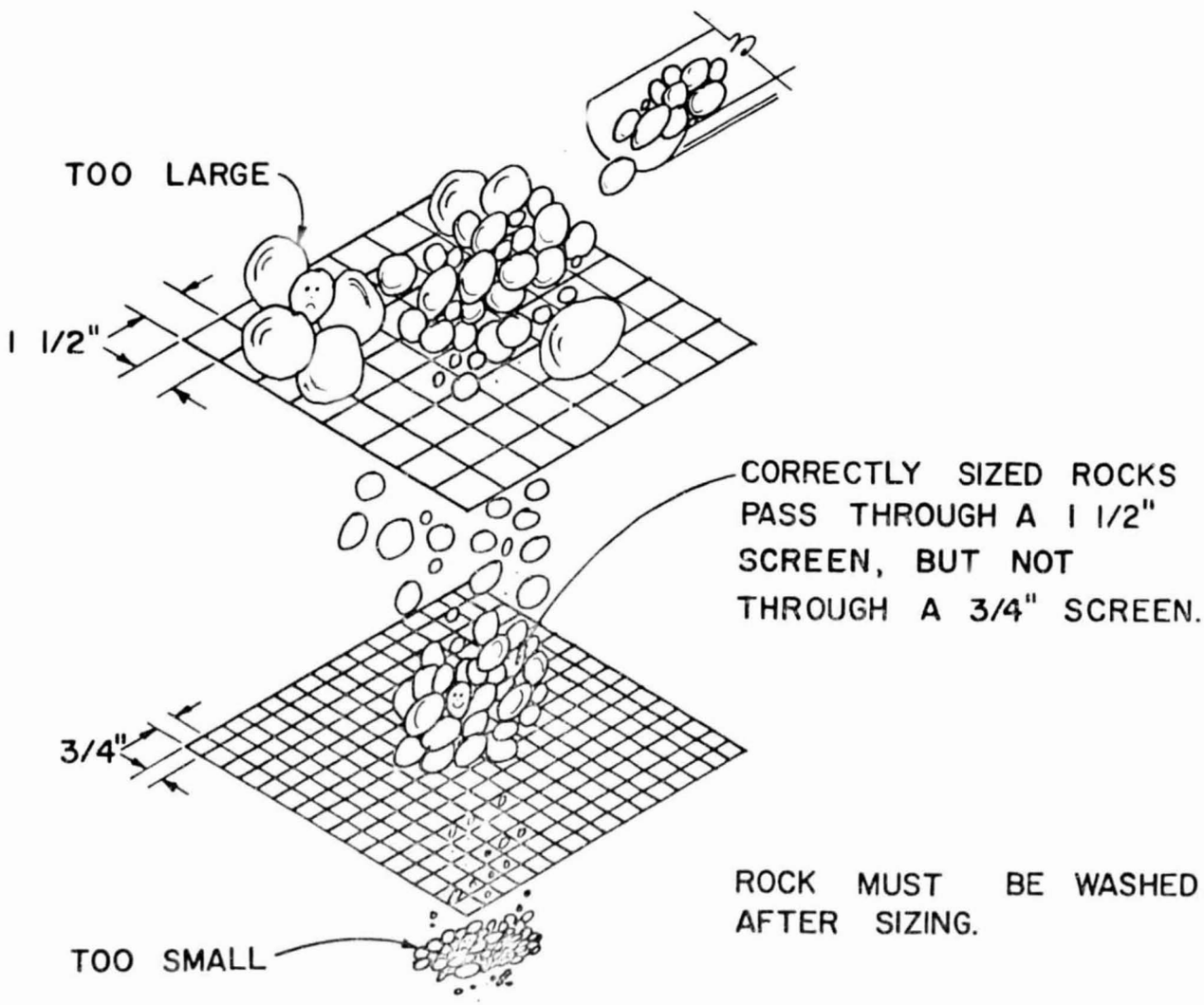

© Copyright May 1978 Solaron Corporation

HEAT STORAGE UNIT

CONSTRUCTION CHECK LIST

		Refer to
☐	Calculate size of heat storage unit	p. 1
☐	Determine location of storage unit	p. 1
☐	Excavate (if required)	p. 1
☐	Prepare and install footings	p. 2
☐	Construct walls of storage unit	p. 6-12
☐	Install tie rod thru walls of storage unit	p. 7-12
☐	Seal interior of storage unit airtight	p. 2
☐	Install wall insulation in concrete box	p. 6-7
☐	Install bond beam block (if required, install transite duct support base and transite duct)	p. 2,7,9,10,14
☐	Install diamond mesh over bond beam block overlap 6" and turn up wall 12". Clamp mesh to transite duct, if used	p. 2,7,9,13,14
☐	Obtain rock of proper size	p. 2, 15
☐	Clean rock	p. 2, 15
☐	Fill rock carefully onto diamond mesh	p. 6, 8
☐	Fill remainder of storage unit, leave supply opening clear and maintain 8" plenum space with smooth surface	p. 6, 8
☐	Caulk and install lid to seal airtight	p. 2

OWNER'S MANUAL

SYSTEM OWNER'S MANUAL

SPACE HEATING
SPACE HEATING
DOMESTIC WATER PREHEAT

SOLARON®
SOLAR ENERGY SYSTEMS

SOLARON® CORPORATION

SYSTEM OWNER'S MANUAL

You are to be congratulated on what could well be the most gratifying purchase you will ever make in your life. By reading the material contained within this manual you will be able to better understand and appreciate not only your investment, but also your personal contribution to help in easing the Nation's energy crisis.

CONTENTS

- A Description of your SOLARON® System
  - Overview of System
- General System Description
  - Collectors
  - Heat Storage
  - Solaron® Air Handling Unit
  - Gravity-Operated Dampers
  - Domestic Water Preheater
  - System Controls
  - Auxiliary Heating System
- How to Operate your SOLARON® System
- Routine Maintenance
- Steps to Follow to Obtain Maximum Performance from your SOLARON® System
- If your SOLARON® System Does Not Work

System Installed By:

System Supplied By:

Solaron® is a registered trade name of the Solaron Corporation.

©Copyright 1978 Solaron Corporation, 720 So. Colorado Blvd., Denver, Colorado 80222.

A DESCRIPTION OF YOUR SOLARON® SYSTEM

Overview of System

Space heating with solar energy has been the subject of research and development in the United States since 1938 when MIT built its first solar heated house. In 1943, Dr. G.O.G. Löf built and installed a successful solar air heating system in his home in Boulder, Colorado; a prototype system, also using circulating air, has worked continuously in his Denver home since 1957 with no major problems and minor maintenance cost.

Thus, the technology of space heating by a solar energy air system has been well developed for a number of years and could have been applied to large scale use if it was economical. However, low fossil fuel and electrical energy costs discouraged the use of relatively expensive solar heating systems until the 1973 oil and energy shortages. When fuel and electricity prices began a rapid upward spiral, solar heating became economically competitive in many parts of the world.

In early 1974, Dr. Löf and several associates organized Solaron Corporation to design, manufacture, and market solar heating systems for residential, commercial, and industrial buildings. The company's technical staff designed a solar air heating production model, based on Dr. Löf's knowledge and the accumulated years of practical experience with the 1957 prototype system in the Löf residence. Since 1974, Solaron has furnished solar heating systems for a large number of residences and commercial buildings throughout the U.S.A. and overseas.

The Solaron Corporation solar heating system is effective in residential, commerical and industrial buildings. Air is the circulating heat transfer medium. The patented flat plate collector array consists of a combination of factory preassembled panels which can be mounted directly on a south facing roof of proper tilt, with proper supports on a flat roof or on another suitable location near the space to be heated. A factory preassembled air handling unit containing automatically actuated dampers, an optional domestic water preheater and a temperature control panel completes the Solaron package. A full-size, auxiliary conventional heating system and the installation labor are provided by others.

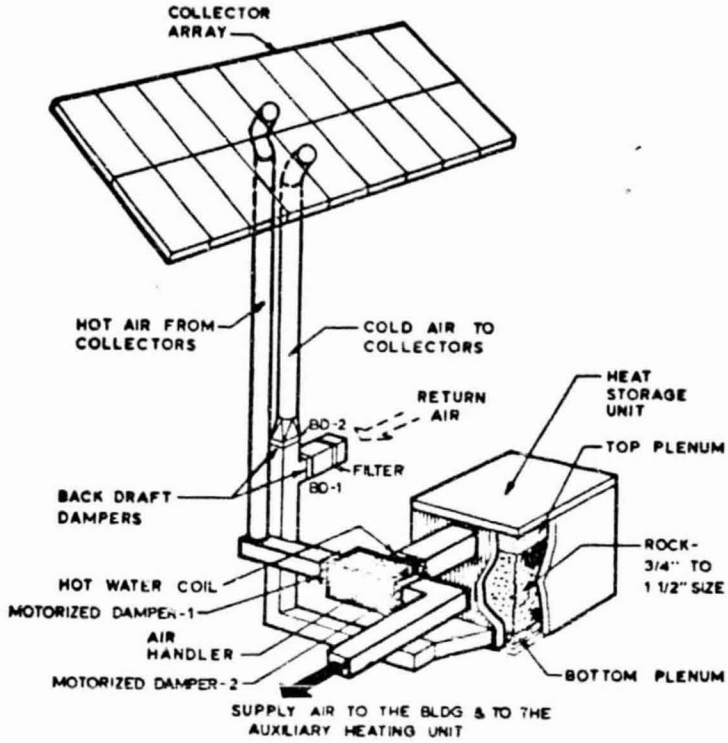

GENERAL SYSTEM DESCRIPTION

This drawing is intended to show a typical installation and relationship of the collectors, air handler, heat storage unit, motorized dampers, back-draft dampers and domestic water coil. The dampers used in solar AIR systems are very important to the successful operation of the system. Therefore, Solaron provides special dampers with airtight seals which are designed for long life and trouble-free service. The purpose or function of each damper is described below:

- MD-1: Motorized damper. Closes to prevent cold air from falling from the collector and leaking into the system in the "Heating from Storage Mode"

- MD-2: Motorized damper. Closes in the "Storing Heat Mode" to direct air to the heat storage unit.

- BD-1: Backdraft damper. Closes in the "Storing Heat Mode" to prevent reverse flow down the return air duct.

- BD-2: Backdraft damper. Closes in the "Heating from Storage Mode" to prevent the possibility of cold air from being drawn down from the collector and leaking into the system.

The following are generalized system modes of operation. The system in your building may have different design features.

Mode A. Heating from Collectors

Air, the circulating heat transfer medium, is drawn through the flat plate collector where it is normally heated to about 120°F - 150°F. When the space requires heat, the solar heated air is drawn through the air handling unit in which a motorized damper is automatically opened to direct the hot air through the auxiliary heating unit and out into the space. The air then returns to the collector at about 70°F where it is again heated and the cycle repeats itself.

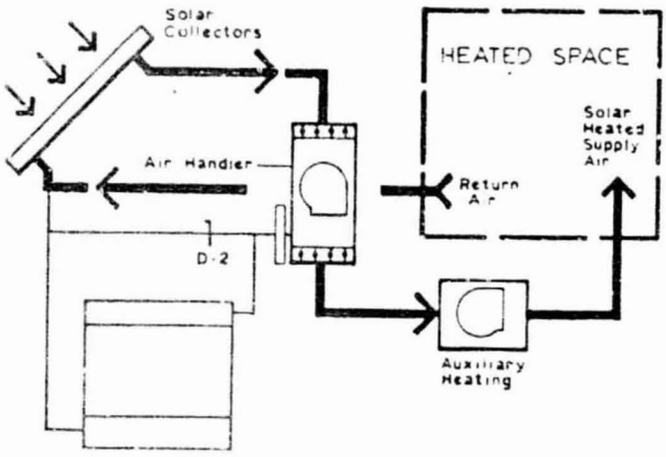

Mode B. Storing Heat

When the space temperature is satisfied, the automatic control system diverts the solar heated air into the heat storage unit where the heat is absorbed by the pebble bed. Relatively cool air from the bottom of the heat storage unit (i.e., normally at 70°F) returns to the collector where it is heated.

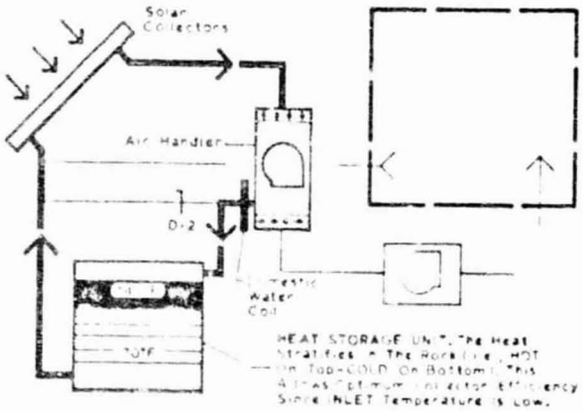

Mode C. Heating from Storage

At night or on cloudy days when solar energy is unavailable and when heat is needed in the space, the automatic control system directs the building return air into the bottom of the heat storage unit, up through the pebbles where the air is heated, through a portion of the air handling unit and into the space via the auxiliary heating unit fan. When the solar heated air does not maintain the space thermostat setting, the automatic control turns on the auxiliary heater to add the required heat.

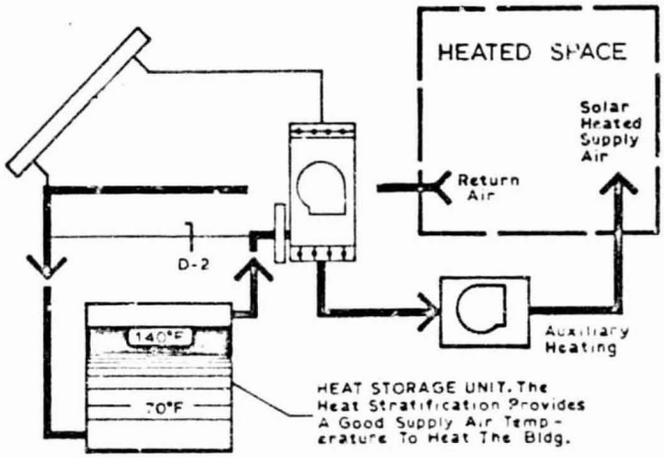

Mode D. Summer Water Heating

In the summer, when space heating is not required, air is drawn through the collector where it is heated and then across the water heat exchanger coil. The solar heated air transfers its heat to the water which is being circulated through the coil and the cooled air is then return back to the collector inlet.

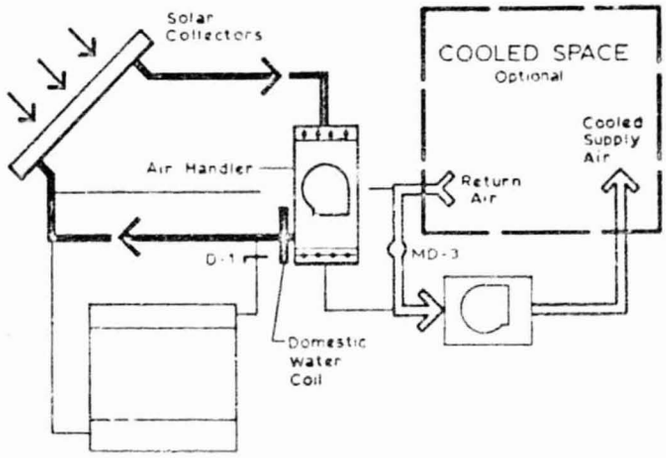

Mode E. Heat Pump Systems - Second Stage Heating (solar energy available)

Heat pump systems should not operate in their heating mode when the return air temperature is high (above 75°F). Therefore, on a call for second stage heating with heat pumps, the solar system is bypassed. All the return air goes through the MD-3 bypass damper to the indoor heat pump unit. Note the solar energy is not wasted since it will go into storage and be used later when there is a call for first stage heating.

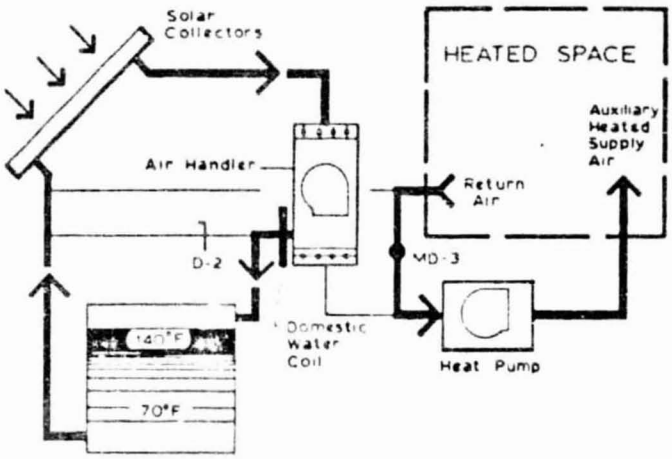

Mode F. Heat Pump Systems - Second Stage Heating (no solar)

This is the same as Mode E except the solar air handling unit is not storing heat. All the return air goes through MD-3. As soon as there is a call for first stage heating the system will heat from storage and the system operates as in Mode C.

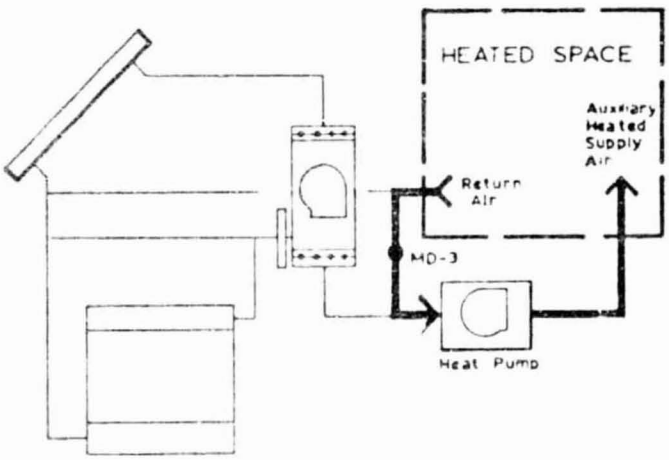

Collectors

The Solaron air heating collector has a flat absorber and heat exchanger plate, is internally manifolded and insulated, is constructed of steel and is covered by special high transmittance glazing. The solar radiation is absorbed and converted to useful heat energy with air as the transfer medium. The collector is subjected to its most severe thermal conditions of up to 400°F when it is in direct sunlight and the system is not operating because there is no heating requirement. The collector performance is optimal if it is oriented due South and tilted at an angle of latitude plus 5 to 15 degrees for space heating and latitude minus 5 degrees for domestic hot water heating and many process heat applications. A variance of 60 degrees from due South, as an example, will generally require an additional 20 percent collector area and a 5 degree variation in tilt from optimum will require approximately 3 percent additional collector area.

The air flow in the Solaron collector passes beneath the absorber in a duct that is formed by the absorber and a second metal sheet. The absorber, therefore, is insulated by a dead air space between it and the glazing. This design makes for a more efficient collector in most applications and protects the absorber surface from dust or other airborne contamination.

The collector utilizes a patented air manifold system to minimize field installation labor and assure uniform high performance. The manifold system replaces most of the ductwork normally used to interconnect other types of air heating collectors.

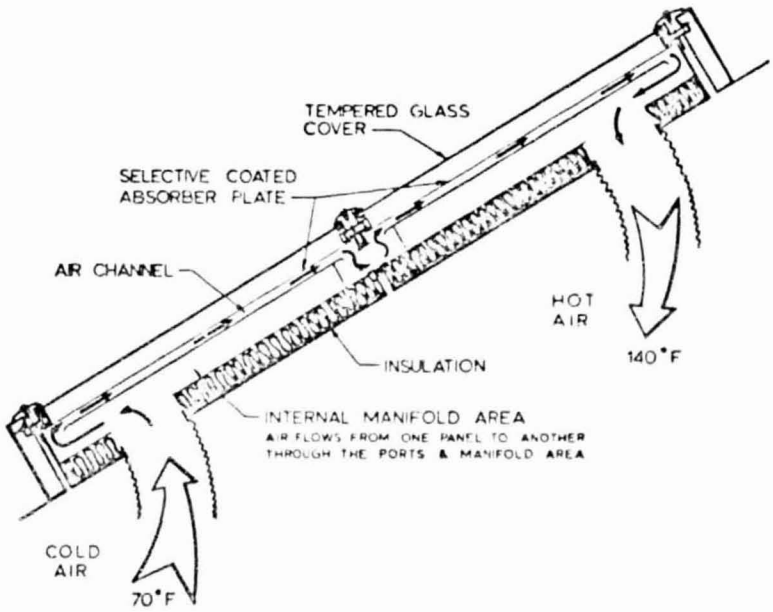

Heat Storage

The use of pebbles in the heat storage unit is particularly effective with an air circulating solar heating system. The pebble bed maintains a steep temperature stratification (i.e., hot on top and cold on the bottom). This allows air to be provided at the highest available temperature to the heated space from the top of the pebble bed. It also allows air to return from the bottom of the bed to the collector at essentially room temperature. This ensures maximum efficiency of solar heat collection and delivery.

The most efficient and least expensive heat storage device for use with a circulating air system a bin of clean pebbles between 3/4 inch and 1½ inches in size. The storage volume is normally sized in accordance with the parameters illustrated. Increasing the storage above the range of 0.50 to 0.75 cubic feet for every square foot of collector will have little or no effect on increasing heat obtained from the solar system.

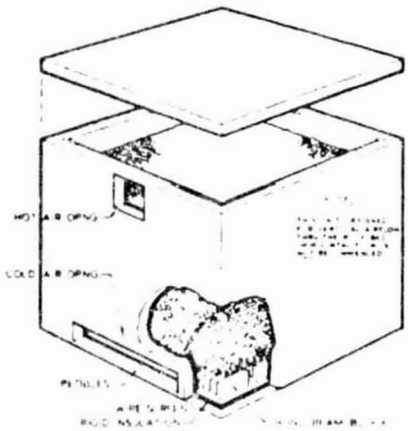

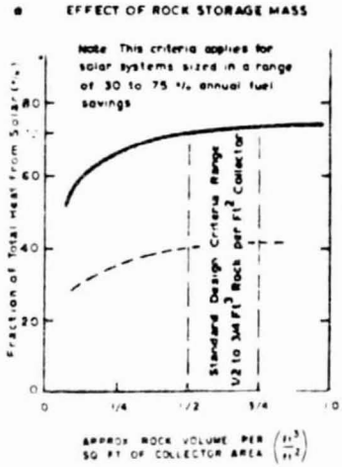

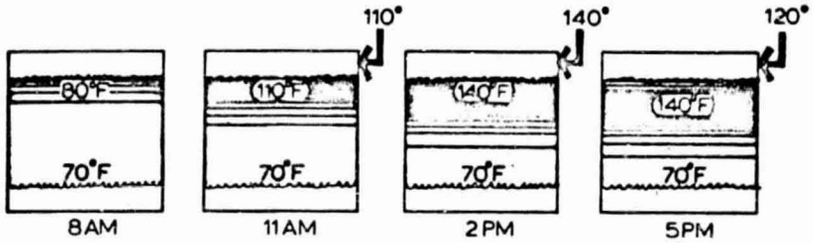

Charge Cycle*

A typical solar system during the winter starts in the morning after having used most of the stored solar energy for the nighttime heating requirement. The collector outlet temperatures (and temperatures into storage) typically peak during the middle of the day and are lower in the early morning and late afternoon. This results in stratified layers of heat such as 120°F to 140°F at the top, approximately 140°F near the middle, 100°F to 120°F near the bottom and 70°F at the bottom.

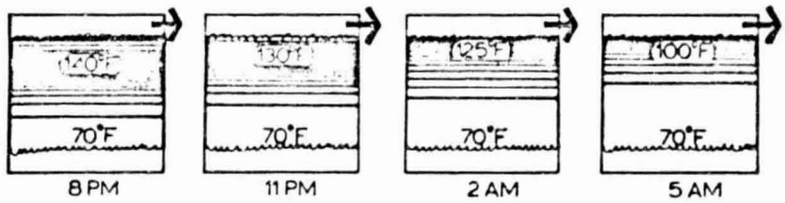

Discharge Cycle*

Heat is extracted from the storage unit in reverse of the charge cycle.

The energy stored in the late afternoon is used first.

Energy stored at the highest temperatures during the middle of the day is used at night during the peak heating hours.

Energy stored from the early morning hours is used towards the end of the peak nighttime heating hours.

* Propagation of the temperature profile through the pebble bed during a typical charge-discharge cycle as measured in actual system operation at Colorado State University.

The length of time that the system can heat from the solar storage unit will vary as a function of the amount of solar energy available and how cold it is outside. There can be times when there will be no heat in the storage unit (i.e. cold winter days when all of the solar energy collected during the day is entirely used up during the same day).

Solaron Air Handling Units

Solaron provides a standard factory preassembled air handling unit, including a blower and field installed motor. A separate pair of motorized dampers is furnished for mounting in the duct system. The installer attaches ducts from the collector, heat storage, and auxiliary heating system to the air handling unit. Certain systems may require additional motorized dampers.

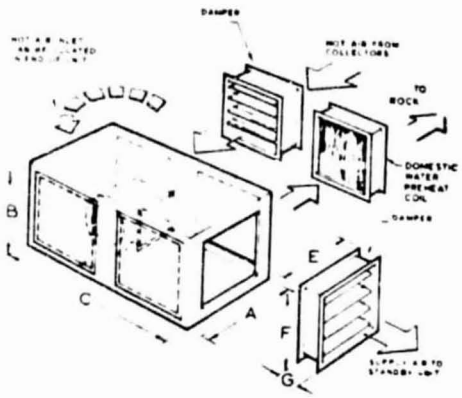

The air handler can be mounted either vertically or horizontally. The motorized dampers are mounted at convenient positions in the ductwork between the collector and the air handler and between the air handler and the auxiliary heating system.

Gravity-Operated Dampers

A typical Solaron system will contain two gravity-operated dampers located on the return air side of the solar system. These dampers automatically open when air is blown through the ducts by the solar system. However, when the system is not operating these dampers will automatically close to prevent the cold night air from leaking down the ducts and into the heat storage unit.

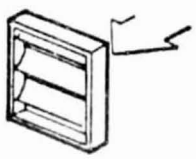

Domestic Water Preheater

SEE SCHEMATIC ON P.13

This is an option which may or may not be included in your system. The water preheater system contains an air-water heat exchanger coil, a small water circulating pump and an insulated storage stank. During all months of the year, hot air from the collector heats the water circulated by the pump through the heat exchanger coil. Warmed water is collected in the insulated storage tank, from which the regular water heater draws its supply. The preheater is replenished from the cold water line. A simple control turns the pump on when solar heated air is being delivered from the collector. While many systems have two domestic water tanks, certain system designs require only one.

System Controls

As part of the complete heating system, Solaron furnishes an automatic control system, including the necessary sensors and switches. The controller acts to shift the system automatically from one mode of operation to another, as required. The control system turns on the blower for collector operation when the sun is providing enough energy for storage or use. It also controls the blower in the auxiliary heating unit when air circulation to the heated space is required. The controller shifts operation between heating the building space and storing heat during a sunny day, and later acts to circulate heated air through the storage into the building at night. In addition, the control system turns on the auxiliary furnace when more heat is required than the solar collector or heat storage can furnish.

Auxiliary Heating System

Every solar heated building requires a full size, auxiliary heating unit which uses locally available fuel (electricity, gas, oil, wood, propane, etc.). Because Solaron's solar heating systems use air as the circulating heat transfer medium, they are easily integrated into conventional air distribution systems.

The auxiliary unit must be sized to furnish the entire building heating load on the coldest day of the year.

The auxiliary heating is furnished by gas, oil, or electric duct heaters or hydronic coils mounted in the conventional duct system. The automatic damper system in the Solaron air handler will automatically respond by directing air to the space or to storage, as required. Control interlock between the solar system and the conventional heating unit utilizes standard temperature control practices.

The following information sets forth a detailed description of the control logic to operate a Solaron system. You should refer to the following system schematic and the legend to assist in understanding this section.

There are two models of Solaron controllers used in most Solaron systems:

1.) For use with conventional heating systems (which may include air conditioning).

2.) For use with most conventional heat pump auxiliary systems.

I. SOLAR ENERGY AVAILABLE. When a 40°F differential is achieved between sensors T_{co} (collector outlet) and T_{ci} (collector inlet), the following events take place:

A. Storing Heat - no demand for space heating.

1. Differential thermostat in controller will energize control circuit to: open MD-1; turn on Solaron air handler blower; turn on hot water pump (optional); close MD-2.

B. First Stage Heating - demand for solar heat in space.

1. The controller circuit will: turn on auxiliary unit fan (auxiliary heat source is off); open MD-2.

C. Second Stage Heating - demand for additional heat (auxiliary).

1. The conventional space heating control circuit will bring on the auxiliary heat source (gas, electric, oil, etc.).

2. The heat pump control circuit will bring on the heat pump compressor and fully open MD-3. (Note: MD-2 closes on second stage for heat pump.)

D. Third Stage Heating (heat pump applications only).

1. A second thermostat will bring on electric resistance strip heating elements in auxiliary heating unit. (An outdoor temperature sensor may be used instead of a second thermostat.)

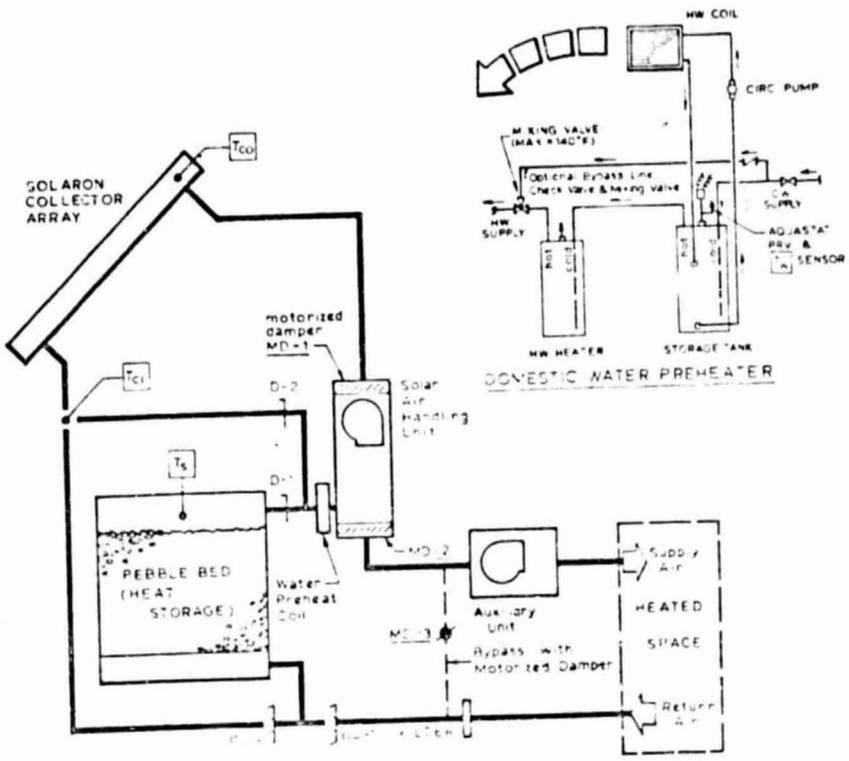

SYSTEM SCHEMATIC

Sequence of Operation									
ODE	MD-1	MD-2	BD-1	BD-2	D-1	D-2	AHU	AUX	MD-3
Heating from Collector	O	O	O	O	O	C	On	On	(*)
Heating from Storage	C	O	O	C	O	C	Off	On	(*)
Storing Heat	O	C	C	O	O	C	On	Off	(*)
Water Heating (Summer)	O	C	C	C	C	O	On	Off	(*)
Air Conditioning and Water Heating	O	C	C	C	C	O	On	On	(*)
O = Damper is Open	C = Damper is Closed			(*) = See MD-3 design Criteria					

ΔT	Differential thermostat
T_{ci}	Temperature sensor collector inlet
T_{co}	Temperature sensor collector outlet
T_s	Temperature sensor rock bin storage
T_w	Temperature sensor water tank
W_1	First stage of heat (solar)
W_2	Second stage of heat (auxiliary)

MD-1	Motorized Dampers
MD-2	
MD-3	
BD-1	Backdraft Dampers
BD-2	
D-1	Manual Dampers
D-2	
AHU	Air Handling Unit

II. SOLAR ENERGY NOT AVAILABLE. When the differential between T_{co} and T_{ci} drops to 25°F or less the following takes place:

A. The conventional space heating control circuit will: close MD-1; turn off air handler blower; turn off hot water pump (optional); open MD-2.

B. First Stage Heating - demand for stored solar heat in space.

1. When T_s sensor (heat storage box) is above 90°F, the conventional space heating control circuit will automatically bring on the auxiliary heating unit to ensure a minimum supply air temperature which will avoid the sensation of drafts. (Note: The heating system will still be circulating air through the heat storage unit to ensure all of the solar energy is used.)

C. Second Stage Heating (same as I-C above).

D. Third Stage Heating (same as I-D above) - heat pump only.

III. DOMESTIC WATER HEATING

A. Winter operation permits domestic water to be preheated any time the system is storing heat. The sensor T_w will shut off the hot water pump when set point temperature of 140°F (can be adjusted) in the domestic water storage tank is reached.

B. Summer operation permits the T_w sensor, when satisfied, to shut down the hot water pump and Solaron air handler and close MD-1 until water temperature in the storage tank drops 15°F below set point of T_w.

IV. AIR CONDITIONING

A. Solar available - System preheats domestic water, auxiliary system cools space as demand is dictated by thermostat and MD-3 opens fully.

B. Solar unavailable - Auxiliary system operates as in IV-A above and the solar air handler and domestic water pump are off.

HOW TO OPERATE YOUR SOLARON® SYSTEM

The Solaron system is simple to operate. All you have to do is set the thermostat to the desired temperature. The automatic control system will do the rest. We recommend that to obtain the most benefit from your solar system you reduce the thermostat temperature setting to 65°F (18°C) or less at night during the coldest period of the year when the storage will typically be depleted before morning. (Heat pump auxiliary units may be left at one temperature setting. Consult your heat pump supplier for setback information.)

For the rest of the year, to minimize auxiliary energy usage, the thermostat should not be set back at night. If it is reduced, the usage of backup fuel may actually be increased. The system is designed to turn on the auxiliary system when there is a two degree (or more) difference in the temperature of the heat space and the thermostat setting. Accordingly, when you increase the thermostat setting in the morning, the auxiliary heating system could be turned on even though there may still be sufficient heat (solar) in storage.

Winter - Summer Operation

Many solar systems have two operating cycles. The winter cycle is for heating your home and preheating the domestic hot water (if you selected this option). The summer cycle is only for preheating the domestic hot water. The system controller has a switch which is visible from the outside. You should move this switch to the desired operating cycle. The system controller is typically located in the mechanical room, near the air-moving equipment. YOU DO NOT HAVE TO REMOVE THE COVER OF THE SYSTEM CONTROLLER TO MAKE THIS ADJUSTMENT.

A typical system may also have one or more dampers which must be changed at the same time. See schematics on pages 13, 4, 5 and 6 for the location of these dampers D-1 and D-2. These dampers are generally manually operated. These dampers are not supplied by Solaron so you should have the installer explain how to operate the dampers he selected for your system. IF THE DAMPER IS SET IMPROPERLY YOU MAY GET NO STORED HEAT IN THE WINTER WHEN YOU NEED IT OR YOU MAY STORE HEAT IN THE SUMMER WHEN YOU DO NOT NEED IT. Some locations may require heat to be stored in the summer due to night heating needs.

Optional System Monitor

Your system may have an optional "System Monitor" which would typically be installed near the thermostat. Six operations are monitored and will indicate which functions of the system are operating. Typically the monitor will show the simultaneous operation of more than one function.

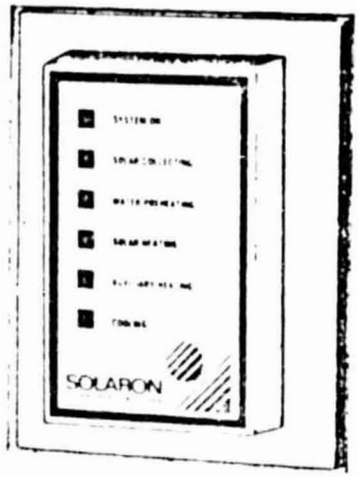

A light by these operations indicates the following functions.

System On: System is ready to operate. If this light is not on then check circuit breaker or fuse box. If the light still is not on then call serviceman.

Solar Collecting: Power is being supplied to the solar air handler, the blower motor is operating and air is circulating through the collector.

Water Preheating: Power is being supplied to the water pump and the domestic hot water preheat is operating. This operation will function only if you selected this option.

Solar Heating: Solar heat is being supplied to the house. If solar collection light is also on then heat is being supplied directly by the collector, otherwise, heat is being supplied from storage. If auxiliary heating light is also on then the solar system is supplying part of heat requirement.

Auxiliary Heating: Auxiliary heating system is operating.

Cooling: This operates only if the house has conventional air conditioning.

ROUTINE MAINTENANCE

The Solaron system requires only minimal upkeep for economical and long-lasting operation. We recommend that a qualified serviceman check the operation of the system twice a year. The system installer will either perform this service for you or will recommend a serviceman.

BE SURE TO DISCONNECT ELECTRICITY BEFORE SERVICING ANY ELECTRICAL COMPONENTS (controller, air handler, dampers, etc.).

The minimum maintenance requirements to be done are described below:

Solaron Air Handler Model AUO400 AND AUO500

Blower Motor — Visually check motor to confirm which type you have. DO NOT OVER-OIL.

Type 1 – Permanently sealed bearings - no oil required.

Type 2 – Motor with oil cups - oil twice a year (#20 S.A.E. non-detergent oil).

Blower Bearings — Permanently sealed - no oil required.

V-Belt — Check wear and tension, replace if necessary.

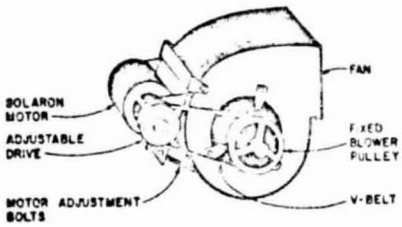

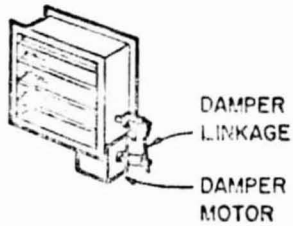

Solaron Motorized Dampers

Damper Motors — Oil twice a year (#10 S.A.E. non-detergent oil, similar to #465 Anderol or Goodlight #10 oil). DO NOT OVER-OIL.

Damper Linkage — Check play and tension of all push rods and arms. Check damper closing for tight seal. Readjust if needed. Oil (same as damper motor above).

Water Pump — The Grundfos circulation pump requires no oiling since it is water lubricated during normal operation. Your system will have a water pump only if the domestic water preheat option is selected.

Filters — These should be changed twice yearly or more often if conditions warrant. It is important that filters be clean if the system is to operate efficiently. New system owners should change filters after the first four weeks of operation.

ORIGINAL PAGE IS
OF POOR QUALITY

STEPS TO FOLLOW TO OBTAIN MAXIMUM PERFORMANCE FROM YOUR SOLARON* SYSTEM

Estimates of system performance are typically based on average weather bureau data accumulated over many years. Yearly variations are to be expected because of changes such as solar radiation available, temperatures, wind conditions and living habits.

The amount of heat supplied by the solar system will vary by month. For example, a system designed to supply 60 percent of the ANNUAL heating requirement may supply only 25 percent in the coldest month of the year and virtually all the heating requirements in the spring, summer and fall. If a system is supplying only 25 percent of the heating requirement for a month, then most of the heat produced by the solar collector that month will be supplied directly to the heated space during the day and very little, if any, heat will be retained in storage for use at night.

CRITERIA FOR SELECTION OF THE ANNUAL FUEL SAVINGS PERCENTAGE

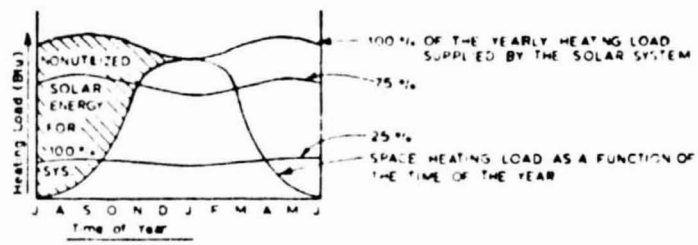

BUILDING SPACE HEATING

THE LOAD VARIES WITH THE TIME OF THE YEAR. THE SOLAR SYSTEM SHOULD NORMALLY BE SIZED TO PROVIDE 25% TO 75% OF THE YEARLY HEATING LOAD.
NOTE: THE 100% SYSTEM HAS A LARGE AMOUNT OF NONUTILIZED ENERGY AND IS IMPRACTICAL & UNECONOMICAL.

To improve the effectiveness of your solar system you should do the following:

- Insulate your house. Consult local insulation suppliers for exact R value recommended for your area.
- Use double pane glass or storm windows.
- Remember that many fireplaces waste heat when they are in use.
- Keep fireplace dampers closed when not in use.
- Run exhaust fan for minimum time.
- Keep windows and doors closed during heating season.
- Set thermostat at maximum of 70°F (21°C) during day and maximum of 65°F (18°C) at night only during the coldest period of the year. See section on "How to Operate Your Solaron System" for a description of the problems of improper night setback.
- Caulk your house to minimize air leaks.
- Minimize usage of electrical, fuel oil and/or gas operated appliances. What may appear as fuel usage may also be increased usage of other appliances.
- Insulate the preheat water tank and hot water tank, if tanks are not supplied with adequate insulation.
- Insulate hot water lines.
- Note that the collectors are free from shading.

You should contact your serviceman only after concluding that you have done everything possible to conserve energy.

To improve the effectiveness of your solar system you should do the following:

- Insulate your house. Consult local insulation suppliers for exact R value recommended for your area.
- Use double pane glass or storm windows.
- Remember that many fireplaces waste heat when they are in use.
- Keep fireplace dampers closed when not in use.
- Run exhaust fan for minimum time.
- Keep windows and doors closed during heating season.
- Set thermostat at maximum of 70°F (21°C) during day and maximum of 65°F (18°C) at night only during the coldest period of the year. See section on "How to Operate Your Solaron System" for a description of the problems of improper night setback.
- Caulk your house to minimize air leaks.
- Minimize usage of electrical, fuel oil and/or gas operated appliances. What may appear as fuel usage may also be increased usage of other appliances.
- Insulate the preheat water tank and hot water tank, if tanks are not supplied with adequate insulation.
- Insulate hot water lines.
- Note that the collectors are free from shading.

You should contact your serviceman only after concluding that you have done everything possible to conserve energy.

IF YOUR SOLARON® SYSTEM DOES NOT WORK

To obtain assistance you should:

- First, contact the system installer. If you do not know the company's name then call your builder.
- If your system installer should not be readily available, then contact any installer of Solaron equipment (see telephone Yellow Pages).
- If you need further assistance, contact the nearest Solaron distributor (see telephone Yellow Pages).
- Should all efforts to obtain local assistance not be successful, then contact:

SOLARON CORPORATION™
1885 W. DARTMOUTH AVE.
ENGLEWOOD, CO 80110
(303) 762-1500

Due to Solaron®'s continuing policy of product improvement, products and specifications may change without notice.

LT0024 12/78

IF YOUR SOLARON® SYSTEM DOES NOT WORK

To obtain assistance you should:

- First, contact the system installer. If you do not know the company's name then call your builder.
- If your system installer should not be readily available, then contact any installer of Solaron equipment (see telephone Yellow Pages).
- If you need further assistance, contact the nearest Solaron distributor (see telephone Yellow Pages).
- Should all efforts to obtain local assistance not be successful, then contact:

SOLARON CORPORATION™
1885 W. DARTMOUTH AVE.
ENGLEWOOD, CO 80110
(303) 762-1500

Due to Solaron®'s continuing policy of product improvement, products and specifications may change without notice.

LT0024 12/78

FAN COIL UNIT

Carrier Direct Expansion Fan-Coil Units

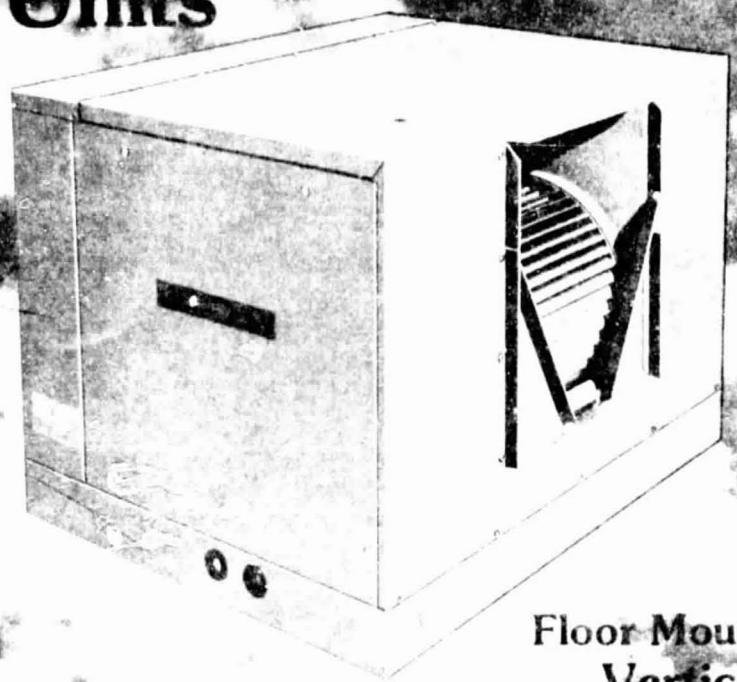

Floor Mount or Suspended Installati

Vertical or Horizontal Discha

Minimal Space Requireme

System Flexibility

2500 to 4300 cfm

Quiet Operation

Durable Cabinet

Carrier Quality

Lower Costs

Designed for efficient performance in commercial and industrial applications

Carrier®

© Carrier Corporation 1977

Form 40BA-1P

Cooling only? heat pump duty? the 40BA009 is both!

Versatility is what Carrier direct-expansion air handlers are all about. The 40BA009 unit delivers peak performance in industrial and commercial heat pump or cooling only applications. And whatever the application, Carrier's "block" styling assures maximum capacity and minimal space requirements.

This 40BA009 air handler can be used in applications with or without ductwork. Rotation of the fan section makes the choice of floor mounted or suspended installation possible, with vertical or horizontal air discharge. An accessory discharge plenum is available for even greater application flexibility . . . it permits "free-blow" in-the-space installations. Accessory electric resistance heaters may also be added to the fan-coil. All 40BA009 units and accessory electric heaters are U.L. listed.

Engineering extras make the Carrier air handler as economical to operate as it is versatile. The resiliently mounted fan motor provides smooth, vibration-free operation. The 40BA's amply sized fan assures efficient and quiet air movement thru the unit.

Factory-insulated casings with removable panels permit easy access for unit maintenance and reduce installation labor costs. And the 40BA fan-coil is built to retain its rugged, handsome appearance year after year. Weather Armor cabinets resist the effects of corrosion, rust, soot and the extremes of weather.

These Carrier accessories tailor the 40BA009 to your exact job requirements

- Filter retainer package
- Discharge plenum and grille
- Inlet grille
- Plenum spacer and heater enclosure
- Strip heater assembly

ORIGINAL PAGE IS OF POOR QUALITY

Dimensions

MODEL 40BA	009
OPERATING WEIGHT (lb)	
Base Unit	255
Plenum	50
REFRIGERANT	12, 500, 22
Oper Chg (lb)	3
COOLING COIL	Plate Type
Rows...Fins/in.	3 13.9
Face Area (sq ft)	7.0
FAN*	
Nominal Cfm	3400
Cfm Range	2500-4300
Rpm Range	468-715
Rpm Change per 1/2 Turn	24.7
Pulley Pitch Diam (in.)	14
MOTOR AND DRIVE	
Center Distance Max (in.)	18.5
Center Distance Min (in.)	15.9
Motor Hp†...Rpm	1...3450
NEMA Frame Size	56
Adjustable Pulley Pitch Diameter Range (in.)	1.9-2.9
FILTERS (Field Supplied)	
Type	High Velocity
Number...Size (in.)	2 20x25x1 or 20x25x2‡
DIMENSIONS (ft-in.)	
Length A	3-4
Width B	2-8
Height C	2-6
CONNECTIONS (in.)	
Refrig — Suction, ODM	1-1/8
Refrig — Liquid, Flare	5/8
Condensate	3/4 FPT
Air Inlet	36 x 27-7/16
Air Discharge	19-3/8 x 17-1/4

*Belt drive
†Furnished as standard equipment, others may be purchased locally
‡2-in. filters are installed by removing rack spacers

NOTE: Expansion valve is not supplied with the fan-coil unit. Expansion valve, check valve, filter drier and required piping to convert 40BA009 to indoor heat pump section are supplied with 38BQ008 outdoor heat pump section.

Physical data

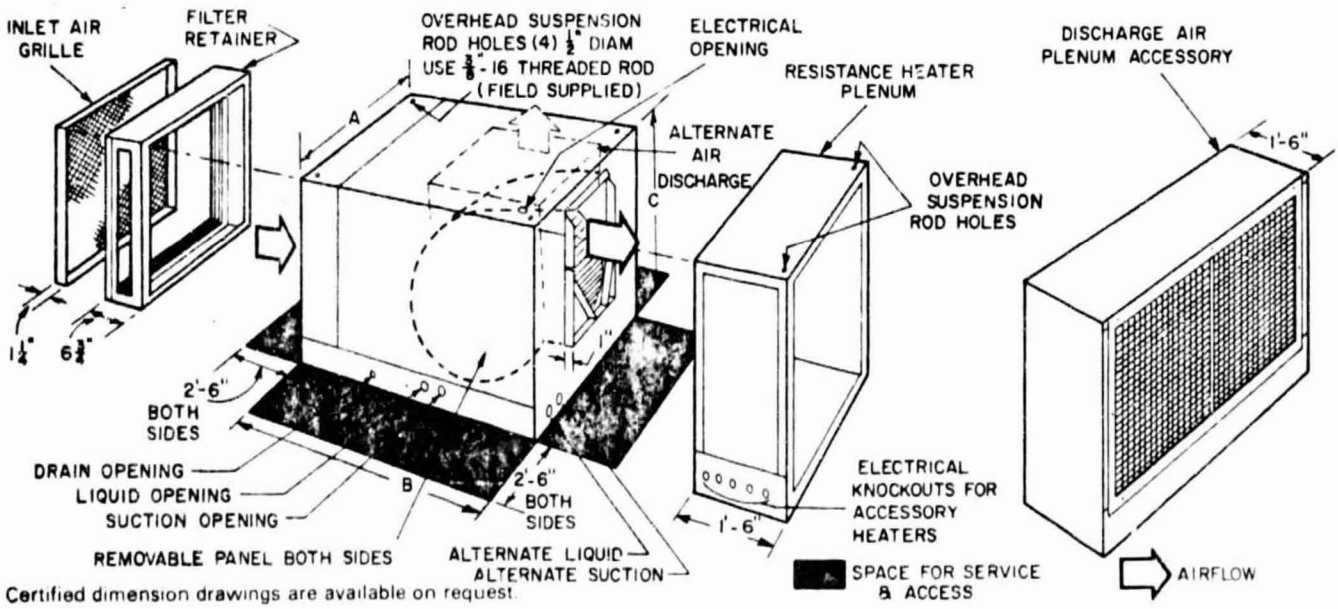

Certified dimension drawings are available on request.

Selection procedure (with example)

Cooling

I Determine required cooling capacity, air quantity (cfm), temperature of air entering unit, and external static pressure.

Given:

Total Capacity (TC) ..... 119,000 Btuh
Sensible Heat Capacity (SHC) ..... 70,000 Btuh
Air Quantity ..... 3400 cfm
External Static Pressure ..... .40 in. wg
Temperature Air Entering Unit ..... 78 F db, 67 F wb

II Select unit to handle required cfm.

Enter Cooling Capacities table at 3400 cfm and select unit 40BA009. Read bypass factor (.23).

III Determine coil refrigerant temperature required to provide the total capacity (TC) and sensible heat capacity (SHC) at the given conditions.

Enter Cooling Capacities table at 3400 cfm and 67 F ewb for 40BA009. Read across table to required 119,000 Btuh TC. At top of column, read 40 F required coil refrigerant temperature. Corresponding SHC is 79,000 Btuh.

IV Correct SHC of selected unit for given condition (if other than 80 F edb).

Enter SHC Correction Factor table, under Cooling Capacities, at 78 F edb and .23 bypass factor. By interpolation, the correction factor is 1.66. Following the instructions given:

Corrected SHC

= Tabulated SHC — (correction factor x cfm)
= 79,000 — (1.66 x 3400) = 73,350 Btuh

V Determine fan speed and bhp required at given conditions.

Refer to Component Pressure Drop table to determine corrections to required external static pressure. In this example, no accessories are used, standard filters are used and wet coil ratings are required. No correction is required. Otherwise, correct the required external static pressure as indicated by the notes under Component Pressure Drop table. Enter Fan Performance table at 3400 cfm and required .40 in. wg external static pressure for unit 40BA009. Read required fan speed (667 rpm) and required bhp (1.07).

VI Determine if special fan motor or special drive is required.

The fan speed and bhp values shown in the Fan Performance table, for the given conditions, were not shaded or italicized. Therefore, standard motor and drive are satisfactory.

To select an outdoor unit to match selected indoor unit, refer to 38 Series condensing unit publications.

Performance data

UNIT	EVAP AIR Cfm BF	EVAP AIR Ewb	COIL REFRIGERANT TEMP (F) 30 TC	30 SHC	35 TC	35 SHC	40 TC	40 SHC	45 TC	45 SHC	50 TC	50 SHC
40BA 009	2500 16	72	158	70	143	65	128	60	112	54	93	48
		67	133	79	119	73	104	67	85	60	69	52
		62	110	86	96	79	81	72	64	64	43	43
	3400 23	72			160	74	146	69	127	62	106	56
		67	152	91	136	85	119	79	100	72	78	63
		62	126	102	110	98	93	90	73	73	48	48
	4300 29	72					156	75	138	69	106	66
		67			147	95	130	89	109	81	86	72
		62	137	115	120	108	100	100	80	80	54	54

BF — Bypass Factor
Ewb — Entering Wet Bulb Temp (F)
TC — Total Capacity (1000 Btuh)
SHC — Sensible Heat Capacity (1000 Btuh)

NOTES
1 Direct interpolation is permissible. Do not extrapolate
2 SHC is based on 80 F db temperature of air entering indoor unit. Below 80 F db, subtract (corr factor x cfm) from SHC. Above 80 F db, add (corr factor x cfm) to SHC

BYPASS FACTOR	ENTERING AIR DRY BULB TEMP (F) 79 81	78 82	77 83	76 84	75 85	under 75 over 85
	Correction Factor					
10	98	1.96	2.94	3.92	4.91	Use formula shown below
20	87	1.74	2.62	3.49	4.36	
30	76	1.53	2.29	3.05	3.82	

Interpolation is permissible. Corr Fac = 1.09 x (1 — BF) x (db — 80)

3 Formulas

t_{db} — t_{edb} = $\frac{\text{sensible heat capacity (Btuh)}}{1.09 \times \text{cfm}}$

t_{wb} = wet bulb temperature corresponding to enthalpy of air leaving evaporator coil (h_{lwb})

h_{lwb} — h_{ewb} = $\frac{\text{total capacity (Btuh)}}{4.5 \times \text{cfm}}$

where h_{ewb} = enthalpy of air entering evaporator coil

These units rated in accordance with ARI Standards 210-75 and 240-76 when used in combination with components specified by the manufacturer. **For combination ratings, see 38 Series Condensing Unit publications.**

COMPONENT PRESSURE DROP (in. wg)

UNIT	CFM	DISCHARGE PLENUM	INLET GRILLE	FILTERS* 1-in.	FILTERS* 2-in.	WET MINUS DRY COIL†
40BA 009	2500	.11	.03	.05	.07	.12
	3400	.20	.05	.07	.10	.18
	4300	.32	.07	.09	.14	.26

*40BA009 external static pressure available is based on use of 1-in. high velocity filters. If any other filter is used, in each case deduct the value for 1-in. filter from the required external static pressure and add on new filter loss value before entering Fan Performance table.

†When 40BA009 is used as a condenser, available external static pressure should be increased by adding applicable value from this column.

NOTE: 40BA009 electric resistance heater static pressure loss is negligible.

AUXILIARY ELECTRIC RESISTANCE HEATER DATA*
(For Heat Pump and Electric Heat)

INDOOR UNIT	HEATER SIZE (kw)	NUMBER OF HEATERS	TOTAL KW	HEATER CAPACITY (1000 Btuh)	MIN AIR† (cfm)
40BA 009	9.8‡	1	9.8	33.4	2500
		2	19.6	66.9	2500
		3‡	29.4‡	100.3	2500

*At nominal voltages of 240 or 480 volts.
†Minimum cfm required to ensure safe operation of heater.
‡Maximum allowable size, number and total kw that may be mounted on unit discharge.

NOTES
1 40BA009 accessory electric resistance heaters are UL approved for mounting directly to the fan discharge.
2 For 10% decrease in voltage, decrease input kw and capacity by 19%. For 10% increase in voltage, increase input kw and capacity by 21%.

Performance data (cont)

FAN PERFORMANCE

CFM	MODEL 40BA009 — EXTERNAL STATIC PRESSURE (in. wg)																	
	0		.2		.4		.6		.8		1.0		1.2		1.4		1.6	
	Rpm	Bhp	Rpm	Bhp	Rpm	Bhp	Rpm	Bhp	Rpm	Bhp	Rpm	Bhp	Rpm	Bhp	Rpm	Bhp	Rpm	Bhp
2500	425	.32	495	.43	580	.58	655	.76	720	.92	790	1.09	830	1.28	890	1.48	—	—
2700	425	.35	518	.52	600	.68	670	.84	730	1.03	800	1.24	850	1.43	*900*	*1.61*	—	—
2900	450	.43	545	.60	617	.78	690	.95	760	1.13	810	1.38	865	1.55	—	—	—	—
3100	480	.54	565	.72	645	.89	707	1.11	760	1.21	825	1.50	865	1.70	—	—	—	—
3300	505	.63	582	.81	660	1.02	718	1.22	770	1.42	840	1.65	885	1.96	—	—	—	—
3400	518	.69	600	.89	667	1.07	725	1.30	775	1.50	865	1.70	—	—	—	—	—	—
3500	530	.74	610	.95	680	1.16	740	1.37	790	1.57	900	1.79	—	—	—	—	—	—
3700	560	.87	635	1.07	700	1.30	760	1.49	*810*	*1.72*	—	—	—	—	—	—	—	—
3900	580	1.01	655	1.23	717	1.46	785	1.67	—	—	—	—	—	—	—	—	—	—
4100	610	1.16	675	1.37	*735*	*1.59*	*800*	*1.87*	—	—	—	—	—	—	—	—	—	—
4300	640	1.28	*700*	*1.56*	*750*	*1.75*	—	—	—	—	—	—	—	—	—	—	—	—

Requires special drive purchased locally.

000 — Italics indicate need for special motor. Use 1½ Hp, 56 frame motor purchased locally.

NOTES

1. Maximum allowable fan speed is 1100 rpm.
2. Fan performance is based on wet coil, clean 1-in. filters, with unit casing losses deducted.
3. When special drive is required, refer to Physical Data table for shafts' center distance limits.

DISCHARGE GRILLE AIR DISTRIBUTION (Front Outlet Only)

UNIT	CFM	VVD	LB	CCH
40BA009	3400	0	85	17
		22½	72	15
		45	53	14

VVD — Vertical Vane Deflection (degrees)

LB — Length of Blow (ft is distance from unit to where velocity of airstream at 6½-ft height has been reduced to less than 75 fpm. LB may be extended by elevating bottom horizontal vanes.

CCH — Clear Ceiling Height is minimum distance from floor to ceiling or any obstruction.

NOTE: Length of blow is approximately proportional to evaporator air quantity.

Electrical data

FAN MOTOR (Single-Phase, 60-Hz)

UNIT	VOLTAGE* 115/200-230 FLA
40BA009	16.0/9.2-8.0

FLA — Full Load Amps

*Motors and controls operate satisfactorily 10% above and 10% below this voltage.

NOTE: Units are shipped wired for 230-volt operation.

Guide specifications

Furnish and install ____ direct-expansion air handling unit(s) in the location(s) shown on the plan(s).

Total cooling capacity shall be ____ Btuh or more and total room sensible capacity shall be ____ Btuh or more at a coil refrigerant temperature of ____ F under the following conditions:

Air entering unit ____ F db, ____ F wb
Air leaving unit ____ F db, ____ F wb

Cooling coil shall be of nonferrous construction with mechanically bonded smooth plate fins. All tube joints shall be brazed with phoscopper or silver alloy.

Evaporator fan section shall have forward-curved double-inlet fan mounted on a common shaft. Fan shall be statically and dynamically balanced and shall run on factory-lubricated bearings. Fan drive shall be V belt with a variable pitch pulley on the fan motor shaft. Evaporator fan shall deliver ____ cfm with ____ in. of external static pressure operating at ____ rpm. Fan motor shall not exceed ____ horsepower.

Casing shall be of welded angular frames supporting the major components as well as the panels. Casing shall be made of zinc-coated, bonderized steel, finished with baked enamel.

Unit construction shall be such that horizontal or vertical discharge may be achieved by relocating the L-shaped fan deck. Provisions shall exist for suspending the unit from an overhead support.

Filters shall be standard size and not less than ____ in. thick. Filters shall have a face area of ____ sq ft or more. A high (low) velocity permanent (throwaway) filter shall be used and shall be protected from the cooling coil condensate.

Maximum dimensions — Length ____ in.; width ____ in., height ____ inches.

Number One Air Conditioning Maker

Carrier

Division of Carrier Corporation

Carrier Parkway • Syracuse, N.Y. 13221

ORIGINAL PAGE IS OF POOR QUALITY

Manufacturer reserves the right to discontinue, or change at any time, specifications or designs without notice and without incurring obligations.

HEAT PUMP UNIT

Carrier
Heat Pump Systems

38BQ

g: 51,000 and 65,000 Btuh
g: 50,000 and 58,000 Btuh

ORIGINAL PAGE IS
OF POOR QUALITY

Efficient, all-electric heating and cooling

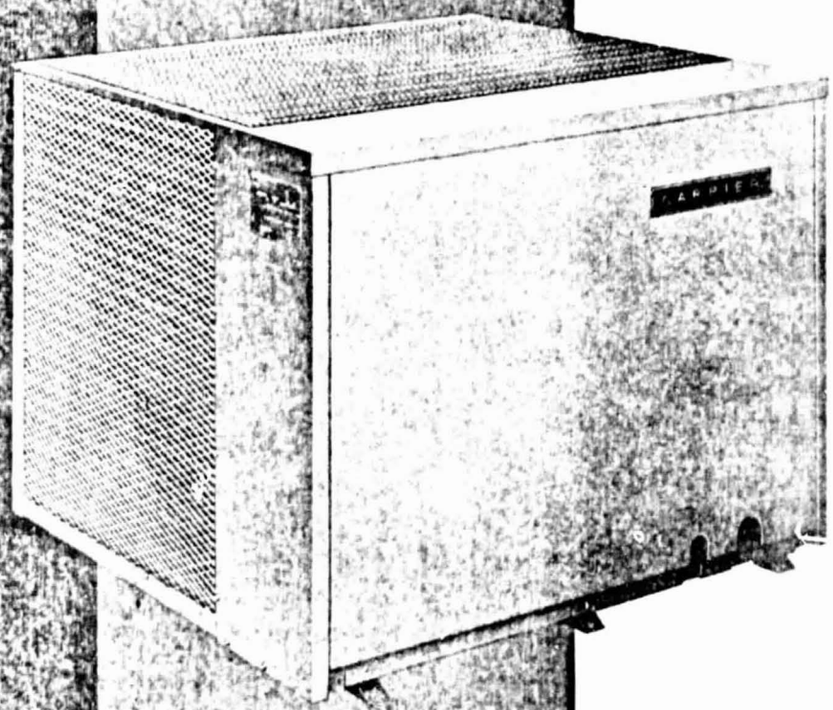

Carrier

The Reverse-Cycle Principle makes the heat pump your best home comfort value

Because of its name, the heat pump system is often taken to be only a heating system. Actually, it is an excellent cooling system as well. The system takes its name from the fact that the heat pump moves, or pumps, heat. . .in either direction, depending on whether heating or cooling is required.

In a way, heat pumps put the weather to work for you at low cost. Taking advantage of the fact that even when outdoor temperature is below freezing the air contains heat that can be recovered for indoor use, the heat pump provides really efficient home heating during winter months. During the summer, the system can automatically reverse, and heat is taken from living areas and pumped to the outside. This means that each unit of the system alternates as an evaporator or condenser as the season changes.

Basic components of a split system heat pump include an outdoor unit which absorbs or rejects heat and is connected by refrigerant tubing to an indoor unit, which adds to or absorbs heat from living areas. Reversing devices, 24-volt transformer, and controls for heating and cooling cycles complete the system. In addition, the system may include provision for auxiliary electric heat which supplements the heat pump's capacity and maintains indoor comfort level when winter temperatures get really severe.

Immediate and long-term energy savings

Energy studies agree the heat pump uses electricity very efficiently. . . and that means economically, too. You can expect the heat pump to operate twice as efficiently as conventional electric resistance heating. Now compare heat pumps. Carrier's Model 38BQ systems and the others. You'll find that Carrier systems lead the industry in energy efficiency.

Gas- or oil-fired furnaces have held a fuel cost advantage over the heat pump until recently. In many areas this cost advantage is gone as availability of gas and oil continues to be questionable and as their costs climb steadily upward. Forecasts point to continuing price rises and supply uncertainty for the foreseeable future. Basing your choice on operating costs and assured fuel availability, the heat pump becomes an attractive alternative in heating and cooling for the home or small commercial building.

Another immediate heat pump advantage. . .its availability. No need for a "crash" program to develop a new, economically practical heating and cooling system. It's already here. When some manufacturers phased out their heat pumps, Carrier continued to build outstanding heat pumps and to work toward improving its line. Today Carrier is the industry leader in heat pumps, and its modern laboratory facilities show the emphasis given to product development and testing. Carrier developed a heat pump which operates efficiently and dependably even in subzero temperatures. This means highly satisfactory performance in every section of the United States.

The heat pump's reverse cycle principle uses refrigerant circulated within a closed system to absorb and transfer heat from one area to another. The process always starts with the evaporator absorbing heat from the air around it and ends with the condenser releasing heat to the surrounding air.

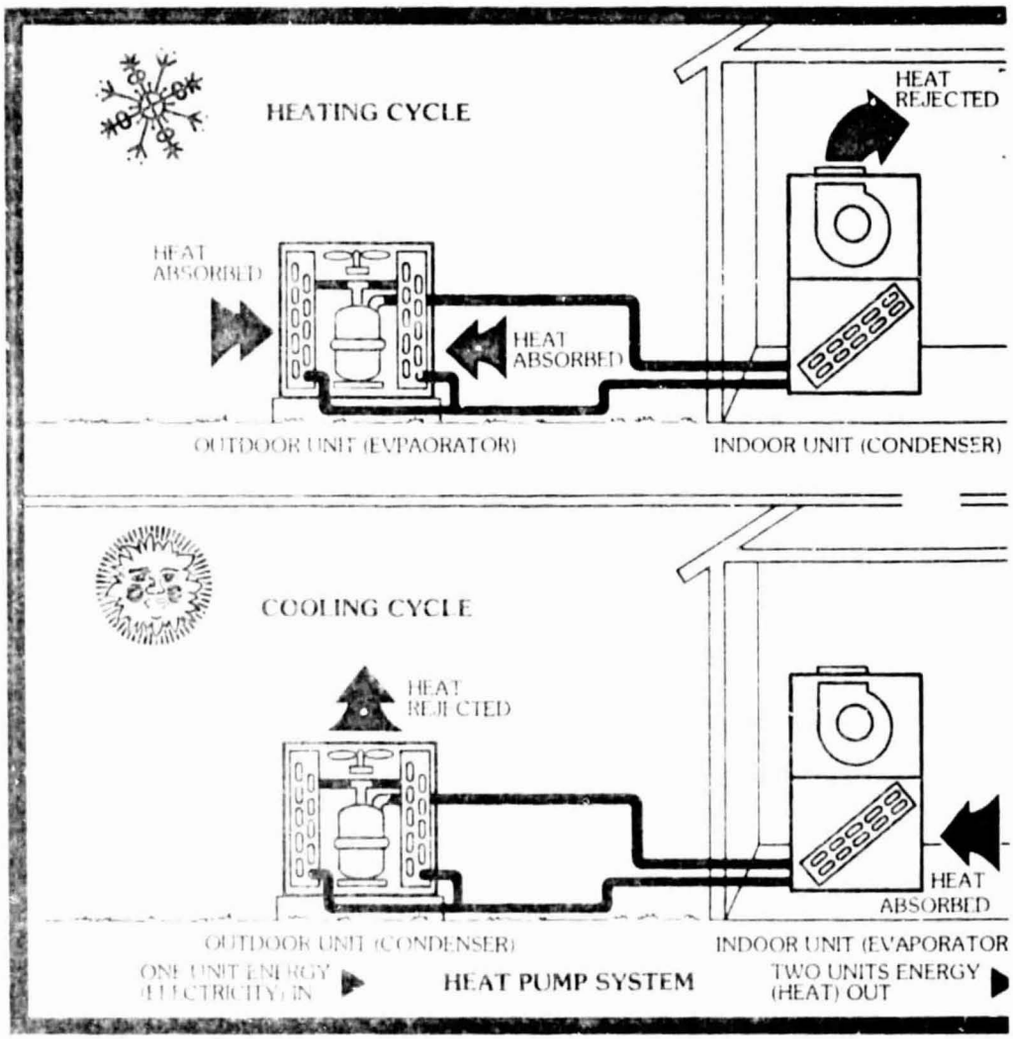

As shown in the diagrams above, the reverse cycle principle allows the outdoor and indoor units to operate as either evaporator or condenser, depending on whether heating or cooling is required.

In the heating cycle, cold refrigerant circulating in the evaporator (outdoor unit) makes the coil colder than the surrounding air, and heat is absorbed. Refrigerant is then brought to a high pressure in the compressor, becoming very hot. The hot refrigerant flows thru

the condenser (indoor unit) coil, which is now hotter than surrounding air. The indoor unit's fan takes room air warmed by the hot coil and distributes it thru your ductwork to heat the entire house.

The system works the same way in the cooling cycle, with indoor and outdoor units exchanging roles as evaporator and condenser. With the indoor unit now the evaporator, coils are colder than indoor air and heat is removed from the house. As described before, refrigerant passes thru the compressor and becomes a high-temperature, high-pressure gas which causes the coils of the outdoor unit (which is now the condenser) to be warmer than surrounding air, and the coils lose their heat. The heat transfer cycle is now ready to be repeated.

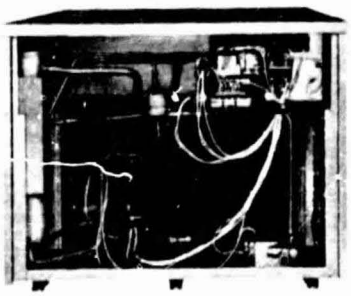

38BQ OUTDOOR UNIT

40FS/28VQ
INDOOR FAN-COIL UNIT

The climate-balanced system

Efficiency

Carrier heat pumps set the standard in the industry for efficient operation. They use a minimum of kilowatt-hours of electricity for home heating. They save heating dollars because they produce a great deal of heat using very little power. . .recovering available heat instead of generating new heat. This approach to home heating means that you typically get two units of energy (heat) for every unit of energy (electricity) used by the heat pump system.

Indoor units feature coils with staggered tubes and mechanically bonded fins to give maximum coil-to-air heat transfer surface.

Multispeed, direct drive fan motors of indoor units can provide automatic selection of air quantities to match heating or cooling requirements.

Dependability

With the Carrier Model 38BQ heat pump system you have a proven design that has an outstanding record of trouble-free service. A big reason for this record is the complete internal protection designed into the system.

Liquid line low-pressure switch protects the system against loss of refrigerant charge.

Time Guard® circuit eliminates motor-compressor short cycling by ensuring a five-minute restart delay whenever the compressor stops.

Crankcase heater prevents dilution of oil by refrigerant during shutdown periods.

Accumulator in suction line protects compressor from refrigerant floodback.

Pressure relief device activates in case of abnormal overheating.

Overcurrent and overtemperature protection is assured in all units.

Chronotemp defrost device provides quick frost removal from coil at temperatures below 45 F, saving operating cost because it is keyed to both time and temperature.

High-pressure protection is built into the compressor.

Start capacitor and relay on 230-1-60 models ensure easier starting under adverse conditions.

Simple installation

No fuel lines, no storage tank, no chimney needed.

Outdoor unit has piping and wiring access holes ready-cut and has controls and compressor located behind a large access panel for easy accessibility. Exclusive Carrier Compatible Fittings permit mechanical or sweat connections without use of adapters.

Indoor unit fits anywhere. . .closet, crawl space, attic. . .for vertical upflow, or horizontal airflow with or without ductwork. Indoor units have Compatible Fittings as standard equipment.

Easy servicing

The Model 38BQ heat pump system is designed so that inspection, adjustment or repair takes very little time and keeps expenses low. Both indoor and outdoor units have controls and components located for easy access during inspection and maintenance. Blower assembly and coil slide out of the indoor unit for convenient, economical service.

Low maintenance

Carrier equipment is built to last, requiring very little in the way of maintenance. Indoor and outdoor units have durable, precision parts, a minimum of wear surfaces and lubrication points. The 38BQ outdoor units are enclosed in Weather Armor cabinets, heavy, galvanized steel double-protected with rugged, baked enamel finish.

Accessories

System

Indoor thermostat. Automatic or manual changeover from cooling to heating. Continuous or cycling indoor fan operation.

Outdoor thermostat. Control electric resistance heaters so that they operate only when required for maximum economy.

32 Series Motormaster® head pressure control. Modulates outdoor unit fan motor speed to maintain proper condensing temperature for cooling at low outdoor temperature.

Precharged tubing packages. Available in 10-, 18-, 25-, 35-, and 50-ft lengths for 005 size.

Electric resistance heaters. A choice of many sizes are available. Designed for heat pump duty, they provide supplemental heat in a single fan coil matching enclosure. Meets NEC requirements; UL listed.

ORIGINAL PAGE IS
OF POOR QUALITY

Physical data and dimensions

UNIT 38BQ		005	006
OPER WT (lb)		353	377
REFRIGERANT		R-22	
Oper Charge (lb)*		12.5	13.2
COMPRESSOR		Hermetic	
Cylinders		2	
Rpm (60-Hz)		3500	
FAN		Axial Flow, Direct Drive	
Air Discharge		Vertical	
Air Qty (cfm)		3900	3700
Motor Hp		1/3	1/3
Motor Rpm		825	825
COIL (Type)		Plate Fin	
Number		2	2
Fins per inch		15	
Face Area (sq ft)		9.75	9.75
Rows		3	4
DIMENSIONS (ft-in.)			
Length	A	3-5-3/8	
Width	B	3-2-1/4	
Height	C	2-5-3/4	
CONN. (in.)			
Vapor Line†		3/4‡	
Liquid Line†		3/8	
OPENINGS (in.)			
Vapor Line	D	1-7/8	
Liquid Line	E	1-1/4	
Power Supply	F	1-3/4	
Control Wiring	G	7/8	

*38BQ units contain correct operating charge for complete system when connected to indoor units with 25 ft of tubing. When other than 25 ft of tubing is used, charge adjustment may be required. See Installation, Start-Up and Service Instructions for details.

†Compatible Fitting Connections.

‡Use 1-1/8 in. OD vapor line on 38BQ006 for all line lengths. Use 7/8-in. OD vapor line on 38BQ005. The 38BQ006 is factory supplied with 3/4- to 1-1/8 in. suction valve connection adapter (field installed). Do not exceed 150-ft line length.

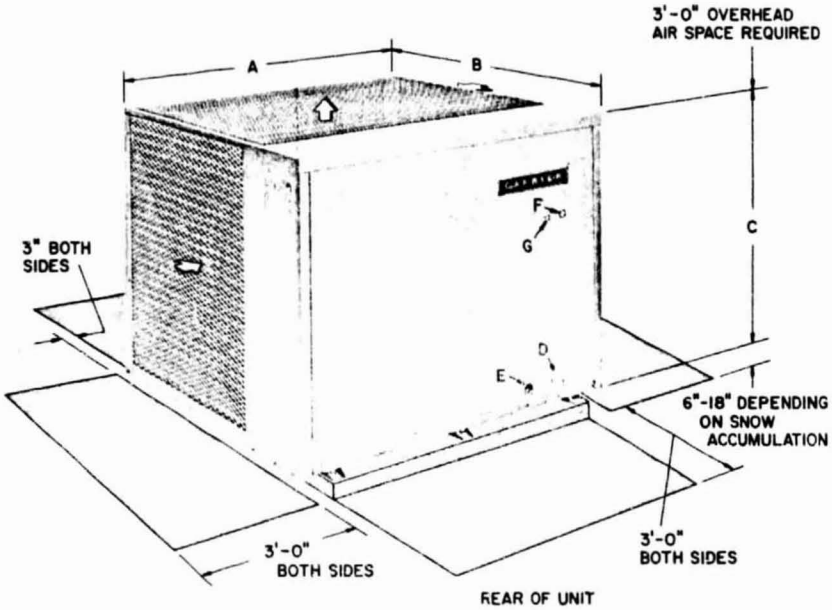

OUTDOOR UNIT 38BQ

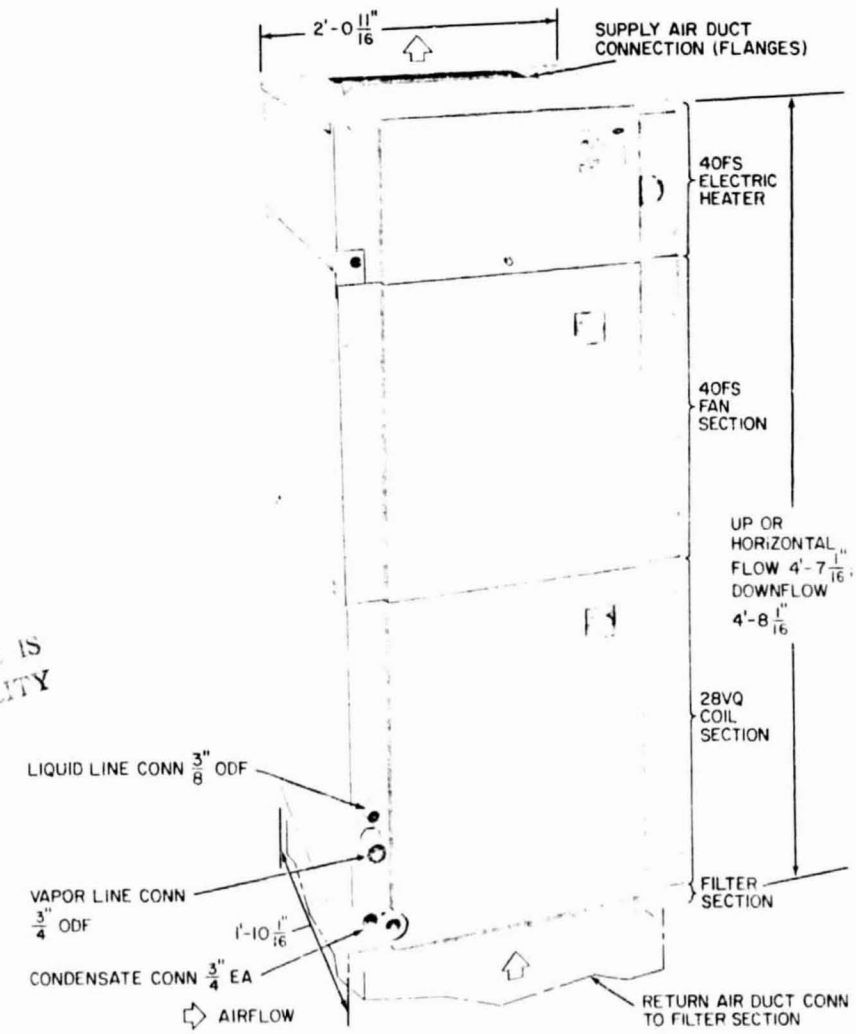

INDOOR UNITS (Typical)

ORIGINAL PAGE IS OF POOR QUALITY

Certified dimension drawings available on request. Also refer to 40 Series Product Data Digest and/or Installation Instructions.

Performance data

COMBINATION RATING INDEX*

OUTDOOR UNIT	INDOOR UNIT (Fan Coil)	CFM	COOLING TC	HEATING				SRN
				High Heat		Low Heat		
				TC	C.O.P.	TC	C.O.P.	
38BQ005	40FS200 with 28HQ/VQ060	1856	50,000	51,000	2.7	30,000	2.1	20
38BQ006	40FS220 with 28HQ/VQ060	2175	58,000	65,000	2.8	38,000	2.1	21

C.O.P. — Coefficient of Performance
TC — Total Capacity (Btuh)
SRN — Sound Rating Number (38BQ)

*38BQ units may be used only in combination with Carrier-approved indoor units.

Rated in accordance with ARI Standards 240-76 and 270-75. Ratings are net values, reflecting the effects of circulating fan heat. Supplementary electric heat is not included. Ratings are based on:

Cooling Standard: 80 F db, 67 F wb indoor entering air temperature and 95 F db air entering outdoor unit.

Hi-Temp Heating Standard: 70 F db indoor entering air temperature and 47 F db, 43 F wb air entering outdoor unit.

Lo-Temp Heating Standard: 70 F db indoor entering air temperature and 17 F db, 15 F wb air entering outdoor unit.

COMBINATION RATING NOTES

1. Direct interpolation is permissible. Do not extrapolate.
2. SHC is based on 80 F db temperature of air entering indoor unit. Below 80 F db, subtract (Corr Factor x Cfm) from SHC.

   Above 80 F db, add (Corr Factor x Cfm) to SHC.

BYPASS FACTOR	ENTERING AIR DRY-BULB TEMP (F)					
	79 / 81	78 / 82	77 / 83	76 / 84	75 / 85	under 75 / over 85
	Correction Factor					
0.10	0.98	1.96	2.94	3.92	4.91	Use formula shown below.
0.20	0.87	1.74	2.62	3.49	4.36	
0.30	0.76	1.53	2.29	3.05	3.82	

   Interpolation is permissible.
   Corr Factor = 1.09 x (1 − BF) x (db − 80)

3. Formulas:

$$t_{ldb} = t_{edb} - \frac{\text{sensible heat capacity (Btuh)}}{1.09 \times \text{cfm}}$$

t_{lwb} = wet-bulb temperature corresponding to enthalpy of air leaving evaporator coil (h_{lwb})

$$h_{lwb} = h_{ewb} - \frac{\text{total capacity (Btuh)}}{4.5 \times \text{cfm}}$$

where h_{ewb} = enthalpy of air entering evaporator coil

4. Net capacities based on 25 actual ft (40 equivalent ft) of interconnecting piping and include a deduction for fan motor heat

AIR-COOLED CONDENSING UNIT AND HEAT PUMP EXPANDED COMBINATION RATINGS (Cooling)

38BQ005/40FS200/28HQ,VQ060

Temp (F) Air Ent Outdoor Unit		Air Ent Indoor Unit — Cfm/BF								
		1650/.13			1856/.14			2063/.15		
		Indoor Unit Ent Air Temp — Ewb (F)								
		72	67	62	72	67	62	72	67	62
85	TC	52.6	50.7	47.4	53.2	51.1	48.2	54.4	51.3	48.0
	SHC	26.0	34.6	43.1	26.4	35.8	45.1	27.5	37.0	45.8
	KW	5.96	5.88	5.75	6.10	6.02	5.90	6.26	6.15	6.02
95	TC	51.8	49.1	45.3	52.3	50.0	46.0	51.5	50.3	46.7
	SHC	25.9	34.4	42.5	26.6	35.4	44.4	26.7	37.1	46.1
	KW	6.31	6.10	6.01	6.46	6.20	6.17	6.54	6.37	6.32
100	TC	50.5	47.8	43.9	51.0	48.2	44.8	50.9	48.4	45.5
	SHC	25.5	34.1	41.8	26.2	35.6	43.7	26.7	36.9	45.1
	KW	6.46	6.33	6.12	6.60	6.47	6.20	6.72	6.60	6.45
105	TC	49.3	46.5	42.5	49.8	46.9	43.5	50.4	47.1	44.3
	SHC	25.1	33.8	41.1	25.8	35.3	43.0	26.3	36.7	44.2
	KW	6.60	6.46	6.24	6.75	6.60	6.41	6.90	6.74	6.58
115	TC	46.8	43.9	39.8	47.3	44.3	41.0	47.3	44.5	41.8
	SHC	24.3	33.1	39.8	25.0	34.7	41.6	26.8	36.2	42.3
	KW	6.89	6.72	6.46	7.04	6.87	6.66	7.26	7.01	6.84

NOTE: Net capacities shown include a deduction for evaporator fan motor heat.

BF — Bypass Factor
Ewb — Entering Wet-Bulb

38BQ006/40FS220/28HQ,VQ060

Temp (F) Air Ent Outdoor Unit		Air Ent Indoor Unit — Cfm/BF								
		1933/.15			2175/.15			2417/.17		
		Indoor Unit Ent Air Temp — Ewb (F)								
		72	67	62	72	67	62	72	67	62
85	TC	63.0	60.4	55.9	[illegible]	[illegible]	[illegible]	64.5	61.4	57.2
	SHC	31.1	41.6	50.9	[illegible]	[illegible]	[illegible]	32.8	45.0	55.6
	KW	7.36	7.24	7.01	7.53	7.42	7.20	7.72	7.58	7.38
95	TC	61.3	57.5	52.8	[illegible]	[illegible]	[illegible]	61.4	58.5	54.4
	SHC	30.7	40.7	49.6	[illegible]	[illegible]	[illegible]	31.7	44.0	53.8
	KW	7.80	7.62	7.34	[illegible]	[illegible]	[illegible]	8.09	7.93	7.72
100	TC	59.7	56.3	51.3	[illegible]	[illegible]	[illegible]	60.4	56.8	53.0
	SHC	30.2	40.4	48.8	[illegible]	[illegible]	[illegible]	31.6	43.6	52.6
	KW	7.97	7.79	7.50	[illegible]	[illegible]	[illegible]	8.31	8.12	7.90
105	TC	58.1	54.6	49.8	[illegible]	[illegible]	[illegible]	59.5	55.6	51.7
	SHC	29.6	34.8	48.0	[illegible]	[illegible]	[illegible]	31.5	43.5	51.7
	KW	8.15	7.96	7.66	[illegible]	[illegible]	[illegible]	8.53	8.31	8.07
115	TC	54.8	51.4	46.8	[illegible]	[illegible]	[illegible]	57.6	53.1	49.0
	SHC	28.4	38.5	46.3	[illegible]	[illegible]	[illegible]	31.3	43.2	49.5
	KW	8.51	8.29	7.98	[illegible]	[illegible]	[illegible]	8.97	8.70	8.42

Kw — Unit Total Power Input
SHC — Sensible Heat Capacity (1000 Btuh)
TC — Total Capacity (1000 Btuh)

MINIMUM OUTDOOR OPERATING TEMPERATURE (Cooling Cycle)

UNIT 38BQ	OUTDOOR AIR TEMP (F)	
	Std Unit	Std Unit with 32LT Accessory
005 006	45	-10

NOTE: Modify standard units as follows to utilize 32LT Accessory

1. The 38BQ005,006 have outdoor fan motor compatible with 32LT accessory
2. Isolate 32LT control from electrical circuit during heating cycle by installing field-supplied 24-volt relay in parallel with reversing valve relay (RVT). Relay must have one set of normally open and normally closed contacts capable of switching 230 volts. Wire relay into existing circuit; see Wiring Diagrams Booklet.
3. Make provisions for winter start by adding a defrost thermostat (Carrier Part No. 50BB900001) to indoor coil. Wire thermostat in series with normally closed contact of suction line low pressurestat.
4. Field-fabricated wind baffles required on all units. Fabrication instructions included with 32LT accessory.

Performance data (cont)

INTEGRATED HEATING CAPACITIES*

OUTDOOR UNIT	INDOOR UNIT (Fan Coil)	TEMPERATURE OF AIR ENTERING OUTDOOR UNIT — Edb (F)																			
		-10		0		10		17		20		30		40		47		50		60	
		Cap.	Kw	Cap.	Kw	Cap.	Kw	Cap.	Kw	Cap.	Kw	Cap.	Kw	Cap.	Kw	Cap.	Kw	Cap.	Kw	Cap.	Kw
38BQ005	40FS200 with 28HQ/VQ060	15.4	3.3	19.6	3.6	24.9	4.0	27.7	4.2	29.9	4.4	36.2	4.8	45.3	5.2	51.0	5.6	53.4	5.7	62.7	6.3
38BQ006	40FS220 with 28HQ/VQ060	21.0	4.5	25.6	4.8	31.0	5.2	36.1	5.3	38.0	5.4	45.0	5.9	56.5	6.3	65.0	6.8	66.5	6.9	78.7	7.5

Cap. — Capacity (1000 Btuh), includes fan motor heat and deduction for thermal line losses of 15 ft of piping exposed to outdoor conditions.

Kw — Power input includes compressor motor power input, indoor and outdoor fan motor input.

*Integrated Heating Capacities — Values shown reflect a capacity reduction at those outdoor air temperatures at which frost forms on outdoor coil.

NOTE:

Heating ratings shown in table are without accessory electric heater and are based on 70 F db air entering indoor coil, 85% rh air entering outdoor coil, and ARI rated cfm. See Heating Capacity Correction Factors table to calculate heating capacity and power input at other cfms and indoor coil entering air temperature.

HEATING CAPACITY CORRECTION FACTORS

CFM/TON* ENT INDOOR COIL	CORRECTION FACTORS		TEMP AIR ENT INDOOR COIL (F)	CORRECTION FACTORS	
	Cap.	Power		Cap.	Power
400	0.98	0.99	65	1.02	0.99
450	1.0	1.0	70	1.0	1.0
500	1.09	1.01	75	0.98	1.0

*Determine cfm/ton from Combination Ratings tables.

Application data

INSULATION FOR VAPOR LINE EXPOSED TO OUTDOOR CONDITIONS

LENGTH OF EXPOSED VAPOR LINE* (ft)	INSULATION THICKNESS† (in.)
10	3/8
25	1/2
35	3/4
150	3/4

*Recommended vapor line insulation for piping exposed to outdoor conditions to prevent loss of heating during heating cycle. When vapor line goes thru interior spaces, insulation should be selected to prevent condensation on cooling cycle. Heating capacity should be reduced 1000 Btuh if over 35 ft of vapor line with 3/4 in. insulation is exposed to outdoor conditions.

†Closed-cell foam plastic insulation with a thermal conductivity of .28 Btuh/sq ft/F/inch.

NOTE: Vapor lines of accessory precharged tubing packages (available for use with 38BQ units) are insulated with closed-cell foam plastic insulation with a thermal conductivity of .28 Btuh/sq ft/F/inch.

TYPICAL SYSTEM WIRING REQUIREMENT

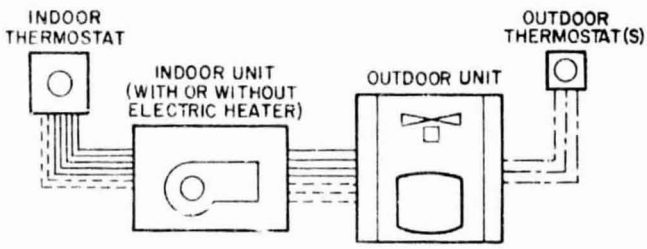

——— Wiring necessary for cooling and one-stage heating. Outdoor unit used with indoor unit not equipped with electric heater.

- - - - Add to cooling with one-stage heating wiring for cooling with 2-stage heating. Outdoor unit used with indoor unit equipped with electric heat.

—·— Add to cooling with 2-stage heating wiring when one or 2 outdoor thermostats are used. (Accessory emergency heat relay required when 2 outdoor thermostats are used.)

Electrical data

ELECTRICAL DATA (60-Hz)

UNIT 38BQ	V/PH	OPER VOLTAGE*		COMPR		FAN	MWA	MFS
		Max	Min	LRA	RLA	FLA		
005	230/1	253	207	106	27.9	2.1	37.0	60
006				135	35.3	2.1	46.2	60
005	200/3	229	180	87.0	18.4	2.1	25.1	40
006		220		113.0	19.8	2.1	26.9	45
005	230/3	253	207	70.0	14.8	2.1	20.6	35
006				98.0	16.0	2.1	22.6	35
005	460/3	506	414	35.0	7.4	2.1	10.3	15
006				49.0	8.0	2.1	11.1	15

FLA — Full Load Amps
LRA — Locked Rotor Amps
MFS — Maximum Fuse Size
MWA — Minimum Wire Amps
RLA — Rated Load Amps

*Permissible limits of the voltage range at which the units will operate satisfactorily.

NOTES

1. Fan motors are 230 volt, single phase.
2. Control circuit voltage on all units is 230 volts. A 24-volt transformer is factory installed for external control circuit.
3. Units require field-supplied grounding wire. See Installation, Start-Up and Service Instructions for wire sizes.

Typical piping and wiring

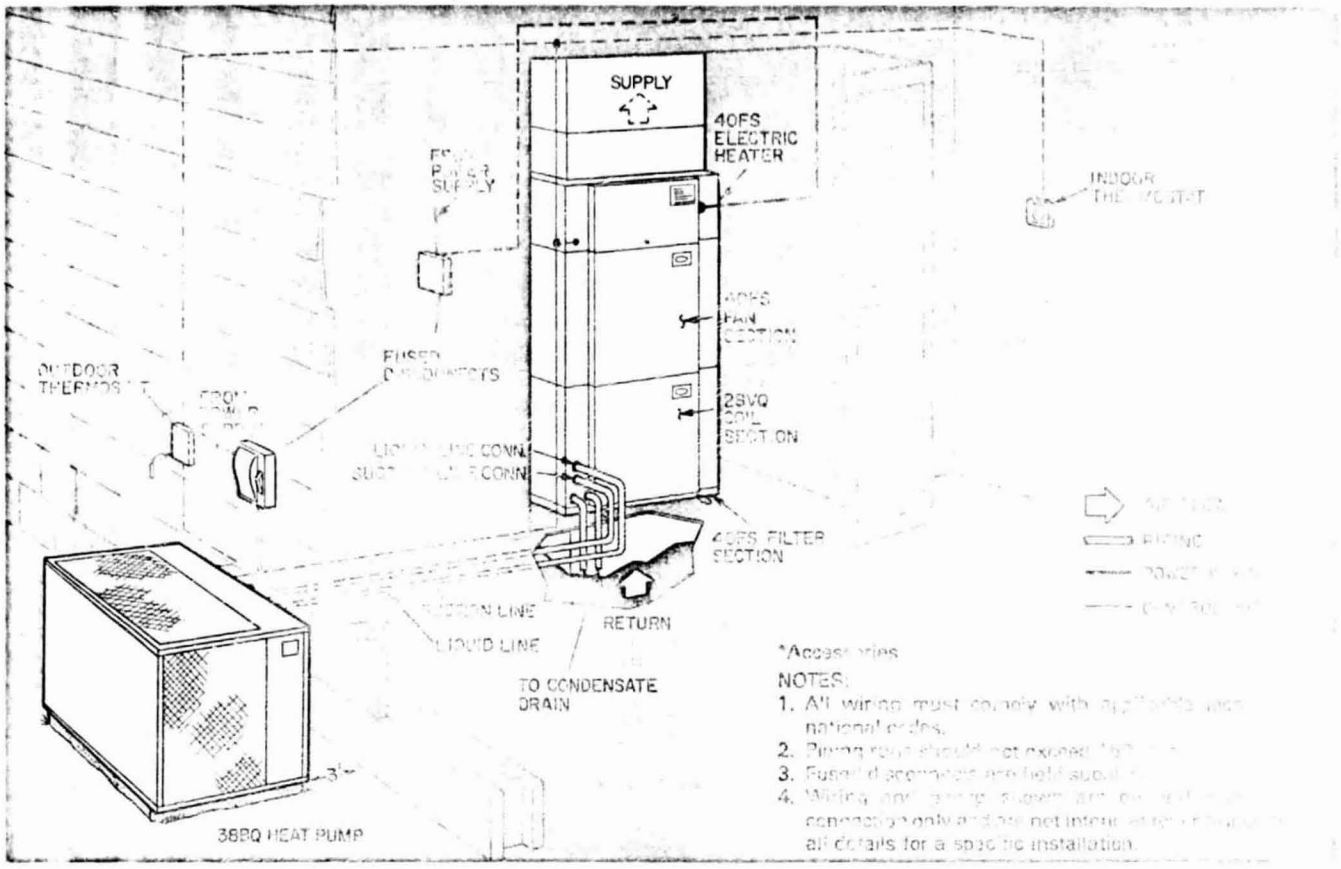

ORIGINAL PAGE IS
OF POOR QUALITY

Guide specifications

Furnish and install an air-to-air electric heat pump (outdoor unit) in combination with a direct expansion fan-coil heat pump (indoor unit) in the location and manner shown on the plan. The units shall be designed and tested for use with Refrigerant 22 and be equipped with refrigerant line fittings which permit mechanical or sweat connection.

Nominal system electrical characteristics shall be _____ v, _____ ph, _____ Hertz. Each unit shall be capable of satisfactory operation within voltage of _____ v to _____ volts.

Total cooling capacity shall be not less than _____ Btuh with indoor unit air quantity of _____ cfm at _____ F wet-bulb temperature coincident with _____ F dry-bulb temperature of air entering outdoor unit. Sensible heat capacity shall be not less than _____ Btuh with _____ F dry-bulb temperature. Compressor power input shall be _____ kw or less at these conditions.

Heating capacity shall be not less than _____ Btuh with air entering outdoor unit at _____ F dry-bulb temperature at 85% relative humidity, and _____ F dry-bulb temperature of air entering indoor unit. Compressor power input shall be _____ kw or less at these conditions. One _____ kw electric resistance heater shall be provided.

Coils shall be constructed with aluminum plate fins mechanically bonded to nonferrous tubing with all joints brazed. Coil shall be _____ rows deep with a nominal fin spacing of _____ fins per in., and shall have a face area of not less than _____ square feet.

Outdoor unit shall contain hermetically sealed compressor with automatically reversible oil pump, internal and external motor protection. Outdoor fan shall be propeller type, arranged for vertical discharge, and direct driven by a factory-lubricated motor of _____ hp or less.

Indoor unit shall operate properly in either vertical upflow or horizontal position with or without ductwork. Unit may be installed *vertically or horizontally* with electric resistance heater, and shall contain refrigerant metering device and indoor fan relay. Fan shall be centrifugal type, direct driven and shall deliver _____ cfm with _____ in. w.g. external static pressure operating at _____ rpm. Multispeed fan motor shall not exceed _____ horsepower.

Controls and protective devices shall include a crankcase heater, liquid line low pressurestat, suction line accumulator and pressure relief device. Motor-compressor shall have both thermal and current sensitive overload devices and internal high-pressure protection. Outdoor unit wiring shall incorporate a positive acting timer to prevent compressor short cycling if power is interrupted. Device shall prevent compressor from restarting for a 5-minute period. An automatic defrost control shall be included to accomplish defrosting (only if required) every 90 minutes for a period of not more than 10 minutes. A 24-v transformer shall be factory installed and wired on outdoor units for external control circuit.

Maximum dimensions: width _____ in., depth _____ in., height _____ inches.

System accessories shall include (Indoor Thermostat), (Outdoor Thermostat), (32 Series Motormaster® Head Pressure Control), (Precharged Tubing Package), (Filter Box with Filters), (Electric Resistance Heaters).

Number One
Air Conditioning
Maker

Carrier

Division of
Carrier Corporation

Carrier Parkway • Syracuse, N.Y. 13221

Manufacturer reserves the right to discontinue, or change at any time, specifications or designs without notice and without incurring obligations.

Book	1	4
Tab	5a	5a

Form 38BQ-12P Supersedes 38BQ-11P Printed in U.S.A. 3-79 PC 101 Catalog No. 523-866

SYSTEM DRAWINGS

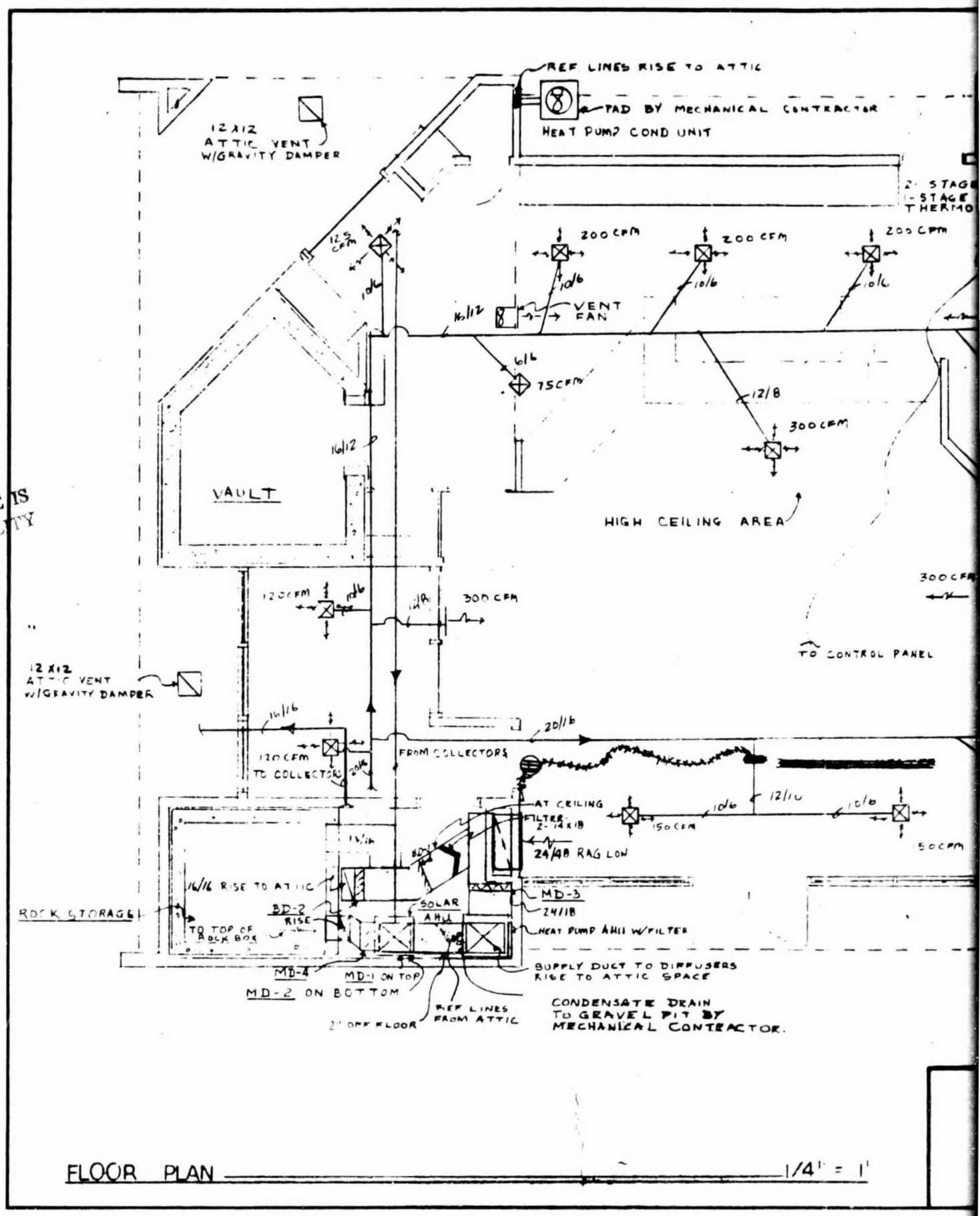

FLOOR PLAN 1/4" = 1'

ORIGINAL PAGE IS
OF POOR QUALITY

FOLDOUT FRAME

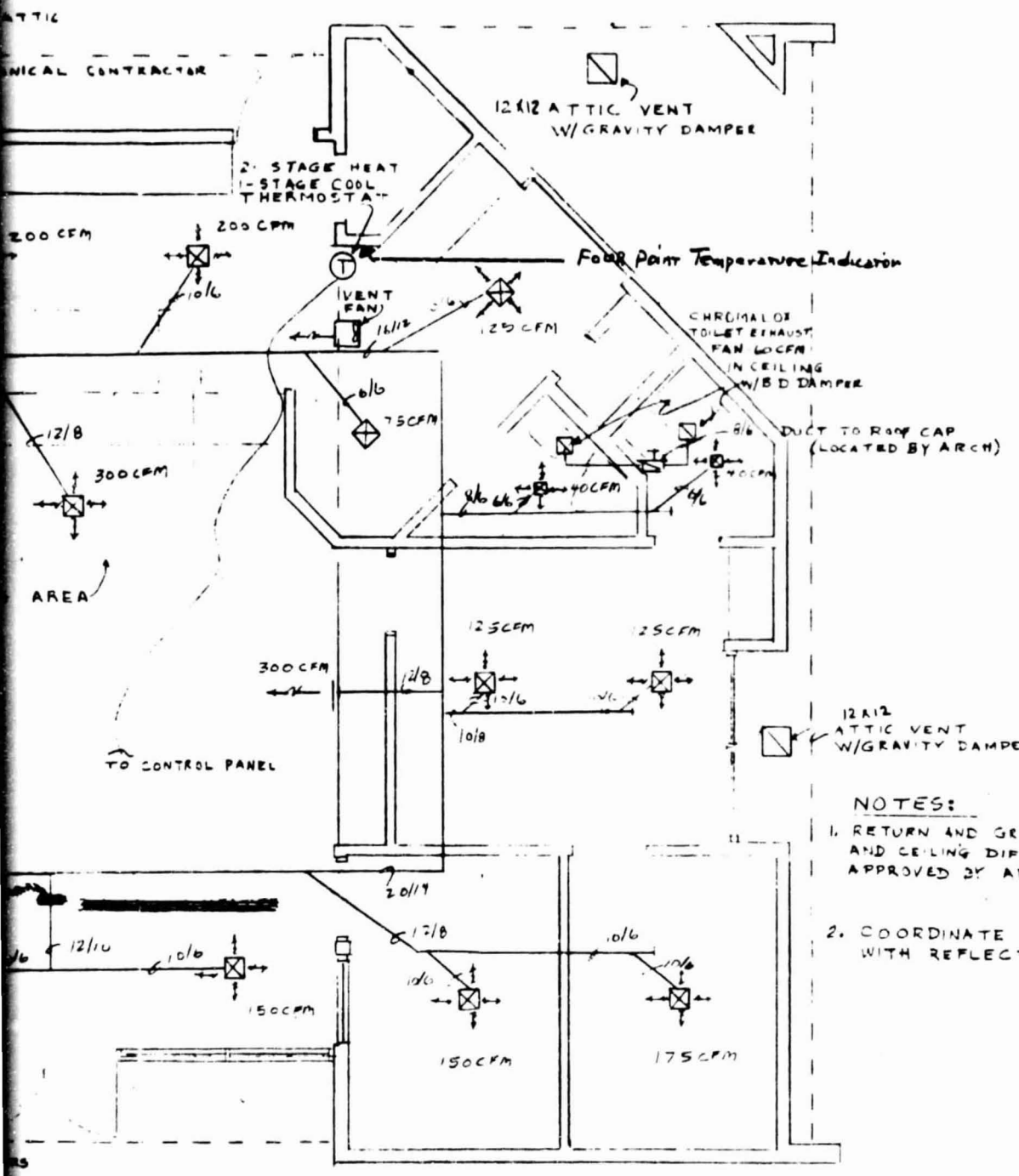

NOTES:

1. RETURN AND GRAVITY VENTS, WALL AND CEILING DIFFUSERS TO BE APPROVED BY ARCHITECT.

2. COORDINATE CEILING DIFFUSERS WITH REFLECTED CEILING PLAN.

ORIGINAL PAGE IS OF POOR QUALITY

1/4" = 1'

DRAWN BY SG	MECHANICAL FLOOR PLAN
DATE 10-4-1978	JOB NO. 7813 — DRAWING NO. M-1 OF 4 OF
CHECKED BY AMA	QUITMAN COUNTY BANK
REVISION	MARKS, MISSISSIPPI
1.	
2.	BREWER, GODBOLD & ASSOCIATES, LTD.
3.	ARCHITECTS & ENGINEERS — CLARKSDALE, MISSISSIPPI

FOLDOUT FRAME 2

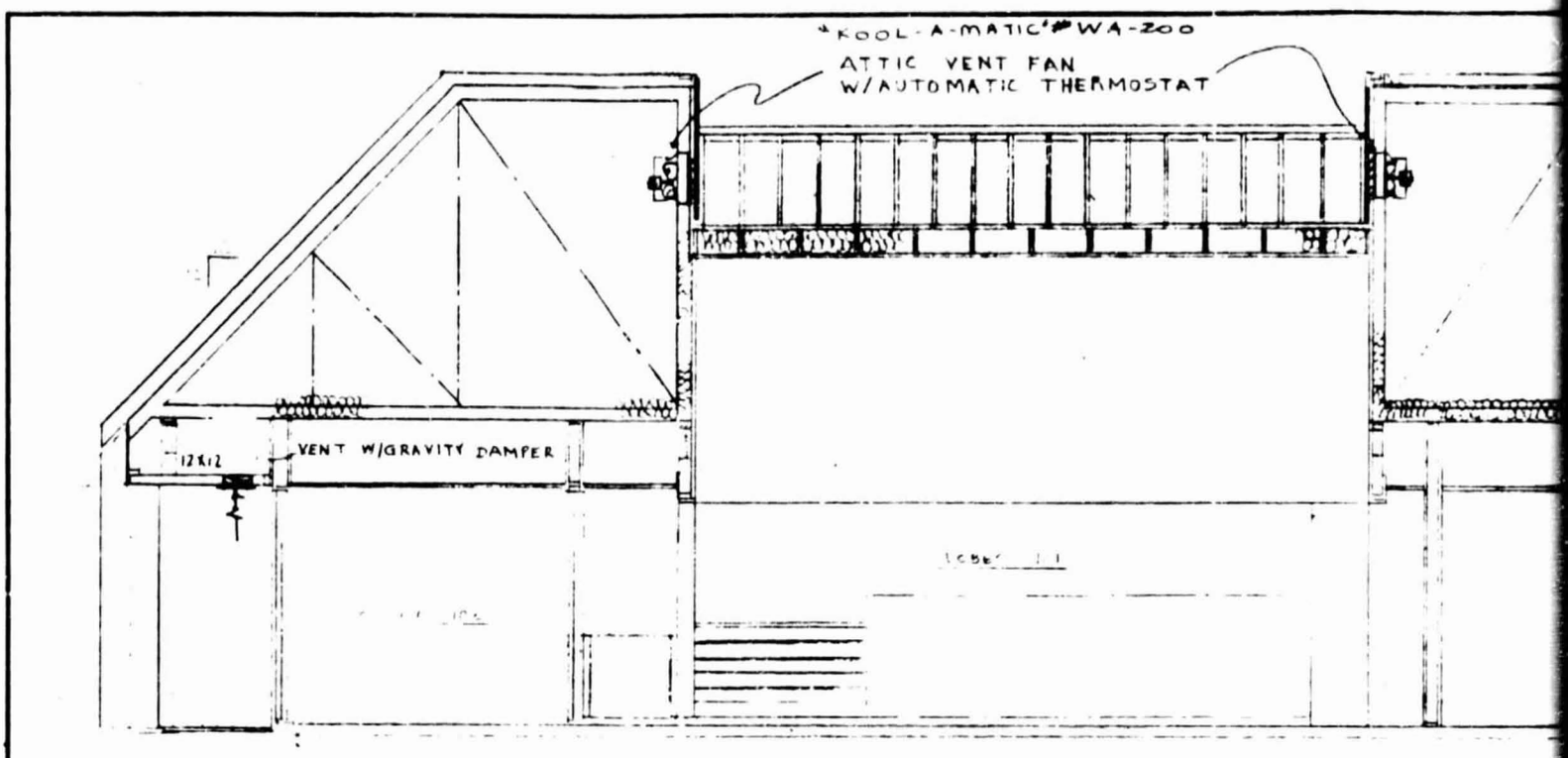

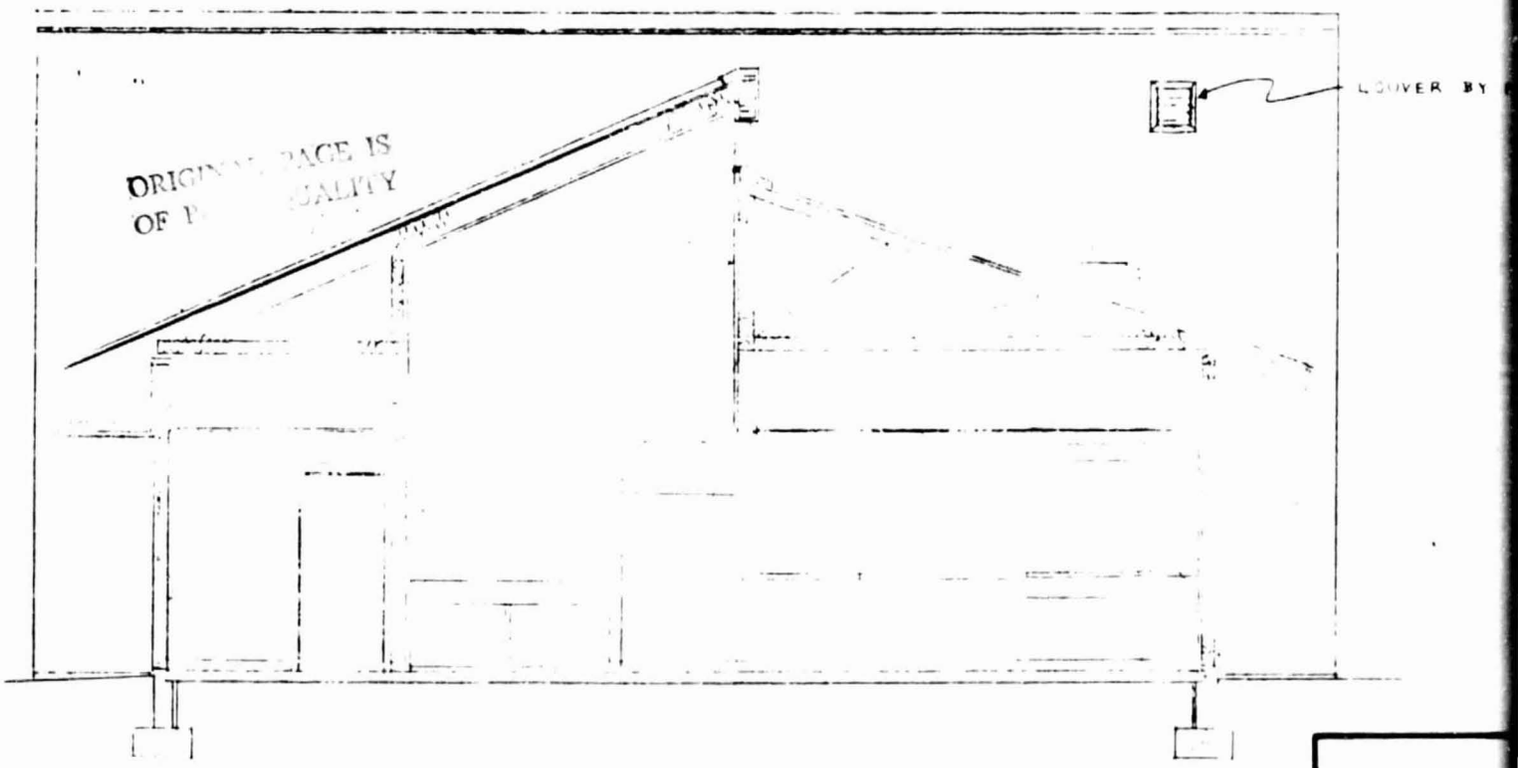

ORIGINAL PAGE IS
OF POOR QUALITY

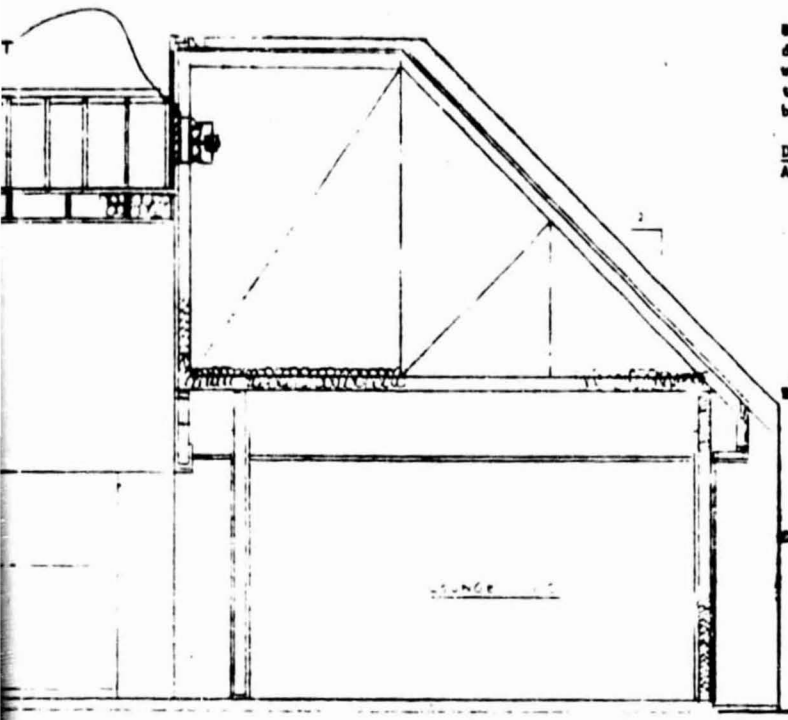

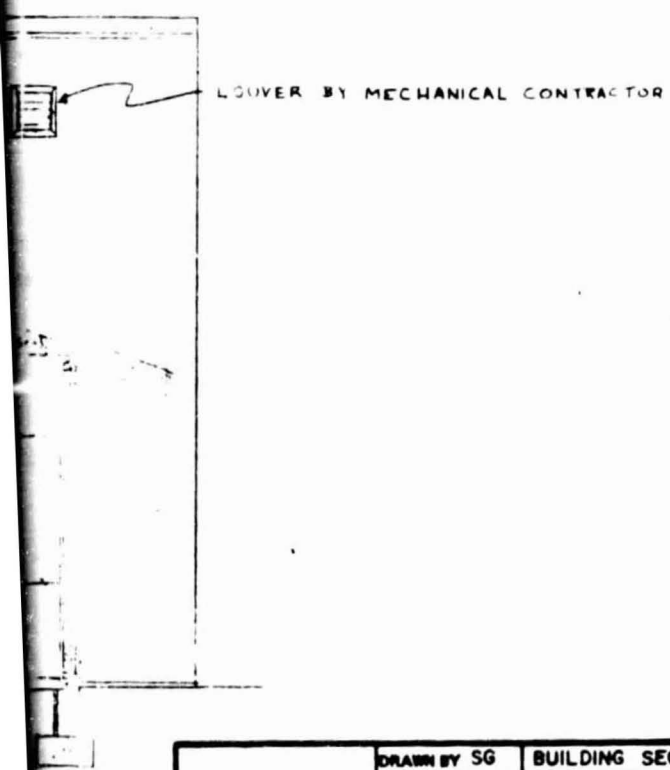

GENERAL NOTES

Do not scale mech. dwgs. [illegible] for exact layout dimensions. This contractor to coordinate mechanical work with other trades. No changes that could affect the operations of the solar & standby systems shall be made without the approval of Solaron.

Duct Insulation

A. All solar ducts use either of these minimum insulation specifications:

a. Sheetmetal to be lined with 1" thick, 1-1/2# density, R-3.85 @ 75°F mean, Owens-Corning type 150 or JM 1" [illegible] or equivalent.

b. Fiberglass ducts to be 1" thick, R-4.35 @ 75°F mean, Owens Corning type 4.[illegible] or JM micro air w/ [illegible] or equivalent.

B. Unheated protected areas (attic, crawl space add to either of above types):

a. Wrap with 1-1/2" thick, 3/4# density, R-5.36 @ 75°F mean, Owens-Corning type KB 75 or JM R-6, FSK-L or equivalent.

C. Unheated unprotected areas (roof, ground), use in lieu of any of above:

a. Duct liner board, 2" thick, R-[illegible].70, weatherproof and support as per local codes.

All solar ductwork joints to be sealed airtight with Dow Corning #732-11-CL silicone sealant rated at 250°F. Min. equivalent product acceptable. Do not use duct tape.

Dampers installed in ductwork shall be sealed airtight in the duct.

All square duct elbows to have turning vanes.

Auxilliary heating unit must be suitable for return air temperatures of 150 degrees F.

Ductwork shall be installed in accordance with SMACNA standards. Size main @ 700 to 900 FPM & branches @ 600 to 800 FPM.
Supply air shall be sized in accordance with mfg. recommendion for proper flow rate & throw.

Air system: Insure R. A. CLRC. from all rooms via a ducted R.A system or undercut doors. All ductwork dim. on dwg. are inside dimen. size fiberglass ductwork can be used except in areas where it may be subjected to abuse or traffic. Must be airtight.

Maximum run or flex. Duct to be 6'-0" long.

ORIGINAL PAGE IS OF POOR QUALITY

DRAWN BY SG	BUILDING SECTIONS, NOTES	
DATE 10-4-1978	JOB NO. 7813	DRAWING NO. M-2 OF 4 OF
CHECKED BY AMA	QUITMAN COUNTY BANK MARKS, MISSISSIPPI	
REVISION		
1.		
2.	BREWER, GODBOLD & ASSOCIATES, LTD.	
3.	ARCHITECTS & ENGINEERS	CLARKSDALE, MISSISSIPPI

FOLDOUT FRAME 2

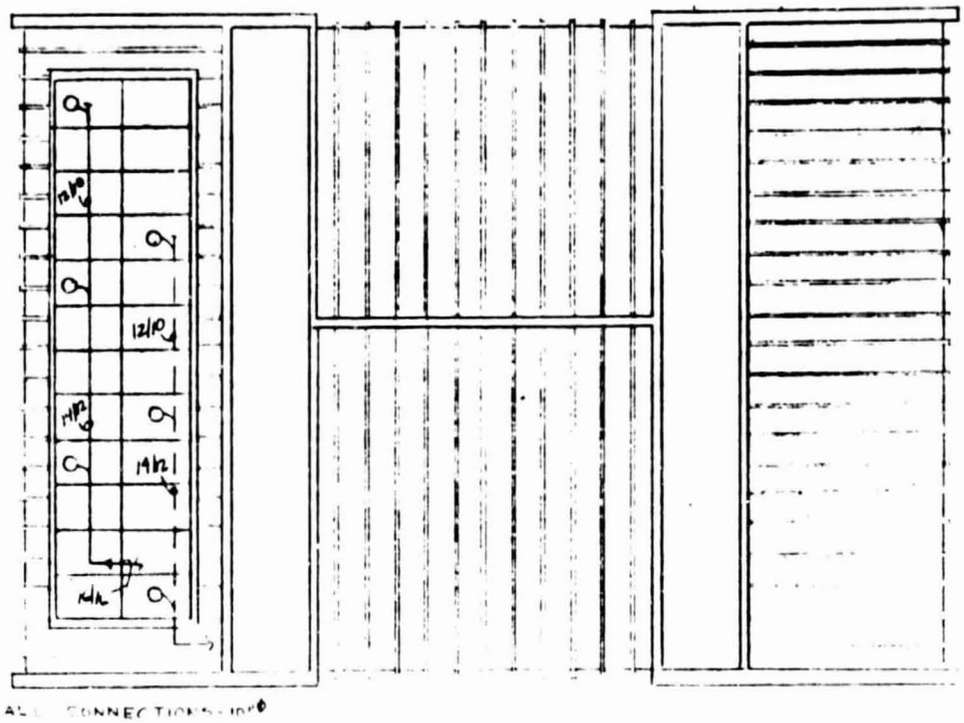

ROOF PLAN 1/8" = 1'

SOLARON FURNISHED EQUIPMENT

1. Collector Panels (Coodinate with solaron installation manual "2000 Series Collector")
   Complete With: A. Hold down clamps & belts
   B. End caps, port gaskets & perimeter sealant tape
   C. Cap strip: 75" & 33" lengths, with TEE'S, X'S and EL'S.

2. Solaron Air Handling Unit (Coordinate with solaron installation manual "Air Handler"
   Complete With: A. Mortorized dampers 1 - 5 (Linkage & motor factory installed)
   B. Motor, pulley & belt (field installed)
   C. Motor relay, contractor or magnetic starter (field supplied & installed)

3. Solaron Control Panel (Coordinate with Solaron installation manual "Controller"
   Complete With: A. Three sensors: T_{ce}, T_{cl}.
   B. 2-stage thermostat & subbase.
   C. 120V/24V transformers (Factory installed on panel)

4. Two Backdraft Dampers (Coordinate size & position with HMC.)

Solar AHU - Solar model AU040, 936 CFM, 1370 RPM, 3/4 HP 230/1/60 motor, @ 1.4" ESP.

Dampers - MD - 1 & 2 Solaron to fit AHU
MD - 3 - Ruskin low leakage model CD.50 to fit sheet metal ducts.

Refrigerant lines: Liquid - 1/2"
Vapor - 1/8"

Backup & A/C Equipment

HP-AHU Carrier 40BA009 - Top discharge
115/208/230, 16.0/ 9.2 / 8.0 Amps.
Motor F. L. Amps,
3000 CFM, @ 1.11 ESP
112,000 BTU/H Cooling @ 67°F EWB
with heat pump accessories

Aux. Heat: Carrier resistance heat units
3 - 9.8 KW elements, total 29.4 KW
100,300 BTU/H, 230/3/60 (1-9.8 KW Disconnected but

Condensing Unit: Carrier 38BQ-008 Heat Pump Unit
84,000 BTU/H @ 45°F SST
at 95°F ambient 230/3/60,
35.2 F. L. Amps, 43.6 Min. Circuit Amps.

NOTE: Electrical Heaters and heat pump condensing unit may operate at the same time.

ORIGINAL PAGE IS OF POOR QUALITY

FOLDOUT FRAME

ORIGINAL PAGE IS
OF POOR QUALITY

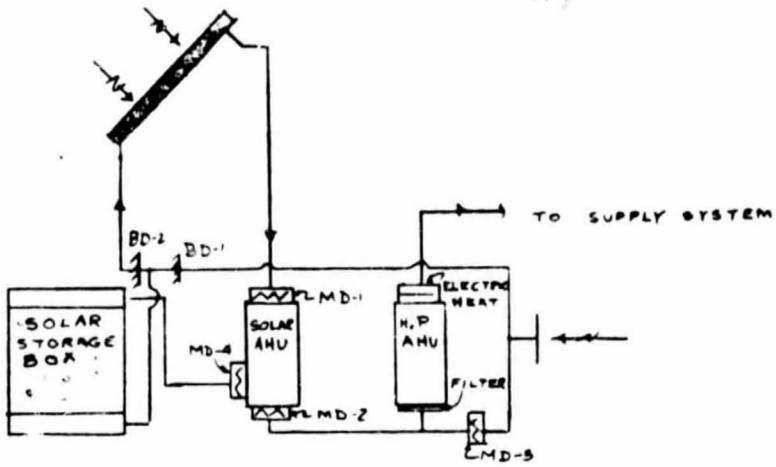

SYSTEM SCHEMATIC

SCALE: NONE

O-OPEN C-CLOSED **SEQUENCE OF OPERATION** PO-PARTLY OPEN FO-FULL OPEN

MODE	BD-1	BD 2	MD-1	MD-2	MD-3	MD-4	SOLAR AHU	HT PUMP AHU	ELECTRIC HEAT
HTG. FROM COLLECTOR	O	O	O	O	PO	C	ON	ON	OFF
STORING HEAT	C	O	O	C	PO	O	ON	OFF	OFF
HTG FROM STORAGE	O	C	C	O	PO	O	OFF	ON	OFF
STORING HEAT & A C	C	O	O	C	FO	O	ON	ON	OFF
AIR CONDITIONING	C	C	C	C	FO	C	OFF	ON	OFF
HTG FROM COLLECTOR PLUS BACKUP HEAT	O	O	O	O	PO	C	ON	ON	ON 2nd Stg T'STAT
HTG FROM STORAGE PLUS BACKUP HEAT	O	C	C	O	PO	O	OFF	ON	ON 2nd Stg T'STAT
~~STORING HEAT PLUS AIR CONDITIONING~~	~~C~~	~~O~~	~~O~~	~~C~~	~~FO~~	~~O~~	~~ON~~	~~ON~~	

Disconnected, but in Place)

FOLDOUT FRAME

DRAWN BY SG	COLLECTOR PLAN, SYSTEM SCHEMATIC	
DATE 10-4-1978	JOB NO. 7813	DRAWING NO. M-3 OF 4 OF
CHECKED BY AMA	QUITMAN COUNTY BANK MARKS, MISSISSIPPI	
REVISION		
1.		
2.	BREWER, GODBOLD & ASSOCIATES, LTD. ARCHITECTS & ENGINEERS CLARKSDALE, MISSISSIPPI	
3.		

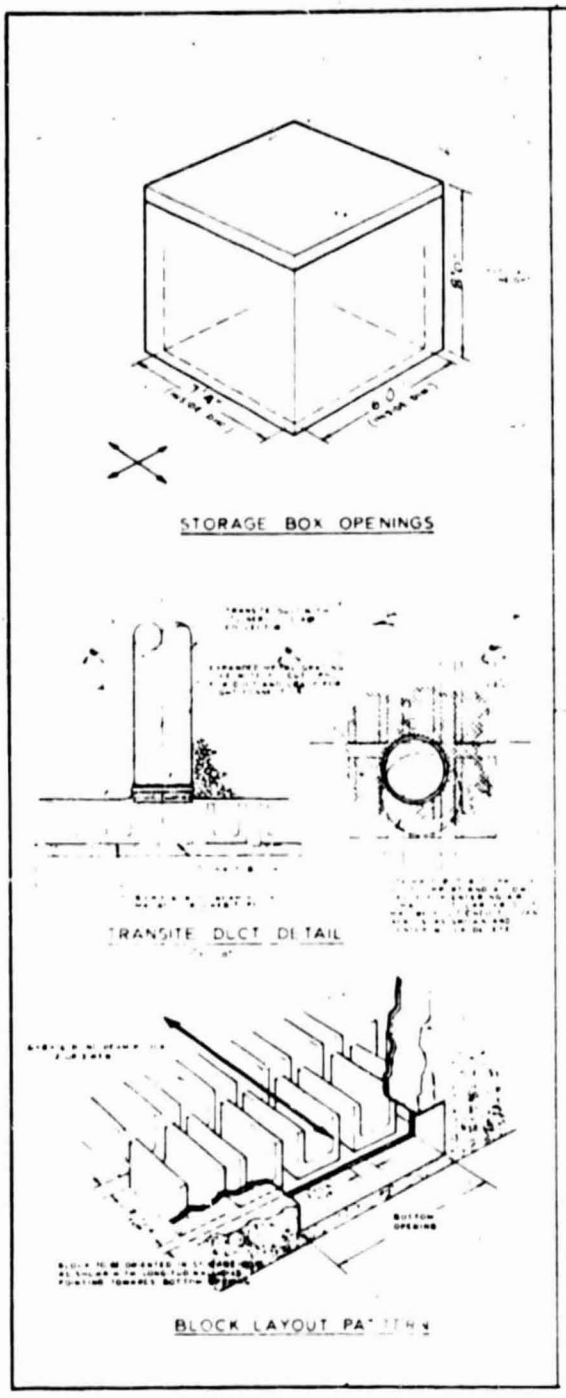

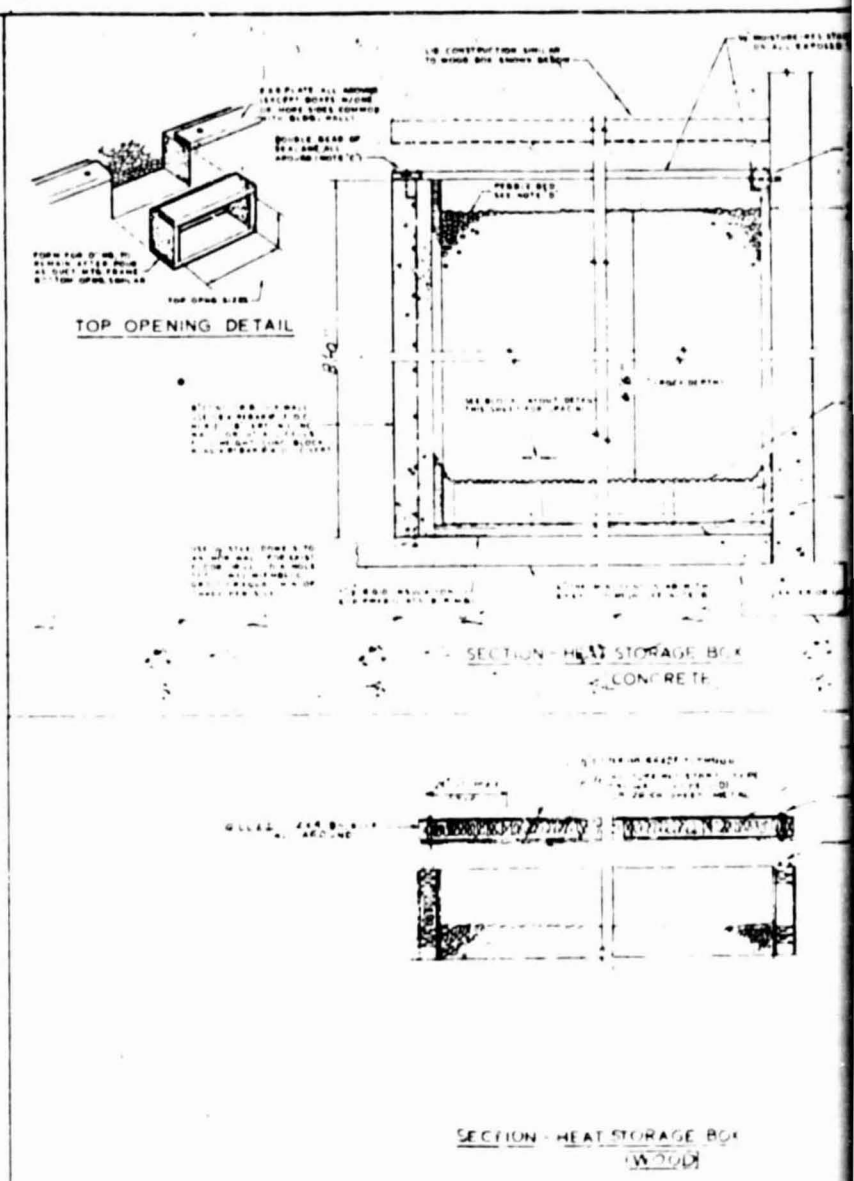

208 Cubic Feet of Rock 3/4" to 1 1/2 in. Diameter

[illegible] Tons @ 1.0 Lbs/Cubic Feet

FOLDOUT FRAME

SOLARON

HEAT STORAGE UNIT

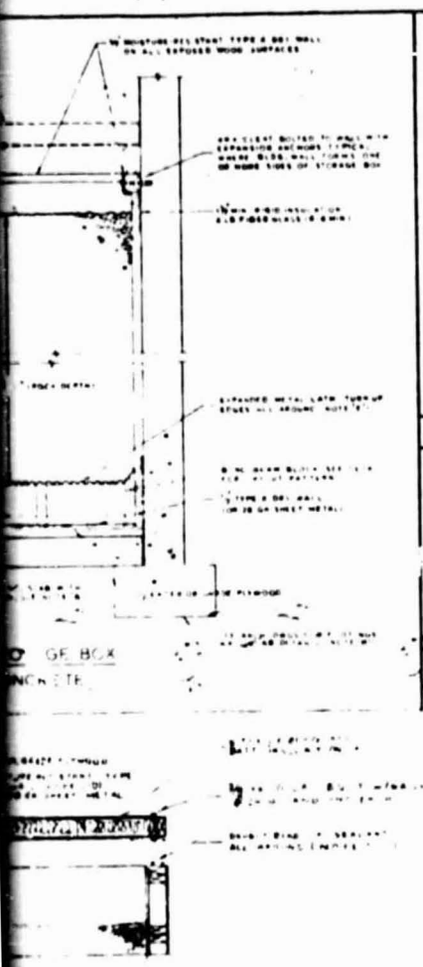

GENERAL NOTES

CONCRETE CONSTRUCTION

FOLDOUT FRAME

2

DRAWN BY SG	STORAGE BOX DETAILS	
DATE 10-4-1978	JOB NO. 7813	DRAWING NO. M-4 OF 4 OF
CHECKED BY AMA	QUITMAN COUNTY BANK MARKS, MISSISSIPPI	
REVISION		
1.		
2.	BREWER, GODBOLD & ASSOCIATES, LTD.	
3.	ARCHITECTS & ENGINEERS CLARKSDALE, MISSISSIPPI	

Performance data (cont)

INTEGRATED HEATING CAPACITIES*

OUTDOOR UNIT	INDOOR UNIT (Fan Coil)	TEMPERATURE OF AIR ENTERING OUTDOOR UNIT — Edb (F)																			
		-10		0		10		17		20		30		40		47		50		60	
		Cap.	Kw	Cap.	Kw	Cap.	Kw	Cap.	Kw	Cap.	Kw	Cap.	Kw	Cap.	Kw	Cap.	Kw	Cap.	Kw	Cap.	Kw
38BQ005	40FS200 with 28HQ/VQ060	15.4	3.3	19.6	3.6	24.9	4.0	27.7	4.2	29.9	4.4	36.2	4.8	45.3	5.2	51.0	5.6	53.4	5.7	62.7	6.3
38BQ006	40FS220 with 28HQ/VQ060	21.0	4.5	25.6	4.8	31.0	5.2	36.1	5.3	38.0	5.4	45.0	5.9	56.5	6.3	65.0	6.8	66.5	6.9	78.7	7.5

Cap. — Capacity (1000 Btuh), includes fan motor heat and deduction for thermal line losses of 15 ft of piping exposed to outdoor conditions.

Kw — Power input includes compressor motor power input, indoor and outdoor fan motor input.

*Integrated Heating Capacities — Values shown reflect a capacity reduction at those outdoor air temperatures at which frost forms on outdoor coil.

NOTE:

Heating ratings shown in table are without accessory electric heater and are based on 70 F db air entering indoor coil, 85% rh air entering outdoor coil, and ARI rated cfm. See Heating Capacity Correction Factors table to calculate heating capacity and power input at other cfms and indoor coil entering air temperature.

HEATING CAPACITY CORRECTION FACTORS

CFM/TON* ENT INDOOR COIL	CORRECTION FACTORS		TEMP AIR ENT INDOOR COIL (F)	CORRECTION FACTORS	
	Cap.	Power		Cap.	Power
400	0.98	0.99	65	1.02	0.99
450	1.0	1.0	70	1.0	1.0
500	1.09	1.01	75	0.98	1.0

*Determine cfm/ton from Combination Ratings tables.

Application data

INSULATION FOR VAPOR LINE EXPOSED TO OUTDOOR CONDITIONS

LENGTH OF EXPOSED VAPOR LINE* (ft)	INSULATION THICKNESS† (in.)
10	3/8
25	1/2
35	3/4
150	3/4

*Recommended vapor line insulation for piping exposed to outdoor conditions to prevent loss of heating during heating cycle. When vapor line goes thru interior spaces, insulation should be selected to prevent condensation on cooling cycle. Heating capacity should be reduced 1000 Btuh if over 35 ft of vapor line with 3/4-in. insulation is exposed to outdoor conditions.

†Closed-cell foam plastic insulation with a thermal conductivity of .28 Btuh/sq ft/F/inch.

NOTE: Vapor lines of accessory precharged tubing packages (available for use with 38BQ units) are insulated with closed-cell foam plastic insulation with a thermal conductivity of .28 Btuh/sq ft/F/inch.

TYPICAL SYSTEM WIRING REQUIREMENT

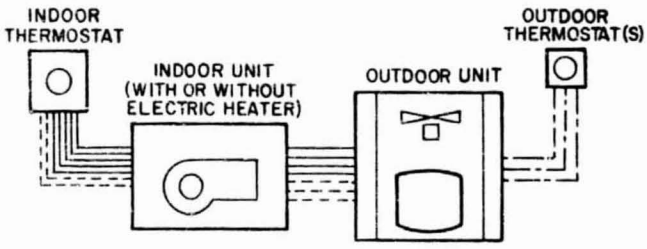

—— Wiring necessary for cooling and one-stage heating. Outdoor unit used with indoor unit not equipped with electric heater.

- - - - Add to cooling with one-stage heating wiring for cooling with 2-stage heating. Outdoor unit used with indoor unit equipped with electric heat.

—·— Add to cooling with 2-stage heating wiring when one or 2 outdoor thermostats are used. (Accessory emergency heat relay required when 2 outdoor thermostats are used.)

Electrical data

ELECTRICAL DATA (60-Hz)

UNIT 38BQ	V/PH	OPER VOLTAGE*		COMPR		FAN	MWA	MFS
		Max	Min	LRA	RLA	FLA		
005	230/1	253	207	106	27.9	2.1	37.0	60
006				135	35.3	2.1	46.2	60
005	200/3	229	180	87.0	18.4	2.1	25.1	40
006		220		113.0	19.8	2.1	26.9	45
005	230/3	253	207	70.0	14.8	2.1	20.6	35
006				98.0	16.0	2.1	22.6	35
005	460/3	506	414	35.0	7.4	2.1	10.3	15
006				49.0	8.0	2.1	11.1	15

FLA — Full Load Amps
LRA — Locked Rotor Amps
MFS — Maximum Fuse Size
MWA — Minimum Wire Amps
RLA — Rated Load Amps

*Permissible limits of the voltage range at which the units will operate satisfactorily.

NOTES:

1. Fan motors are 230 volt, single phase.
2. Control circuit voltage on all units is 230 volts. A 24-volt transformer is factory installed for external control circuit.
3. Units require field-supplied grounding wire. See Installation, Start-Up and Service Instructions for wire sizes.

Typical piping and wiring

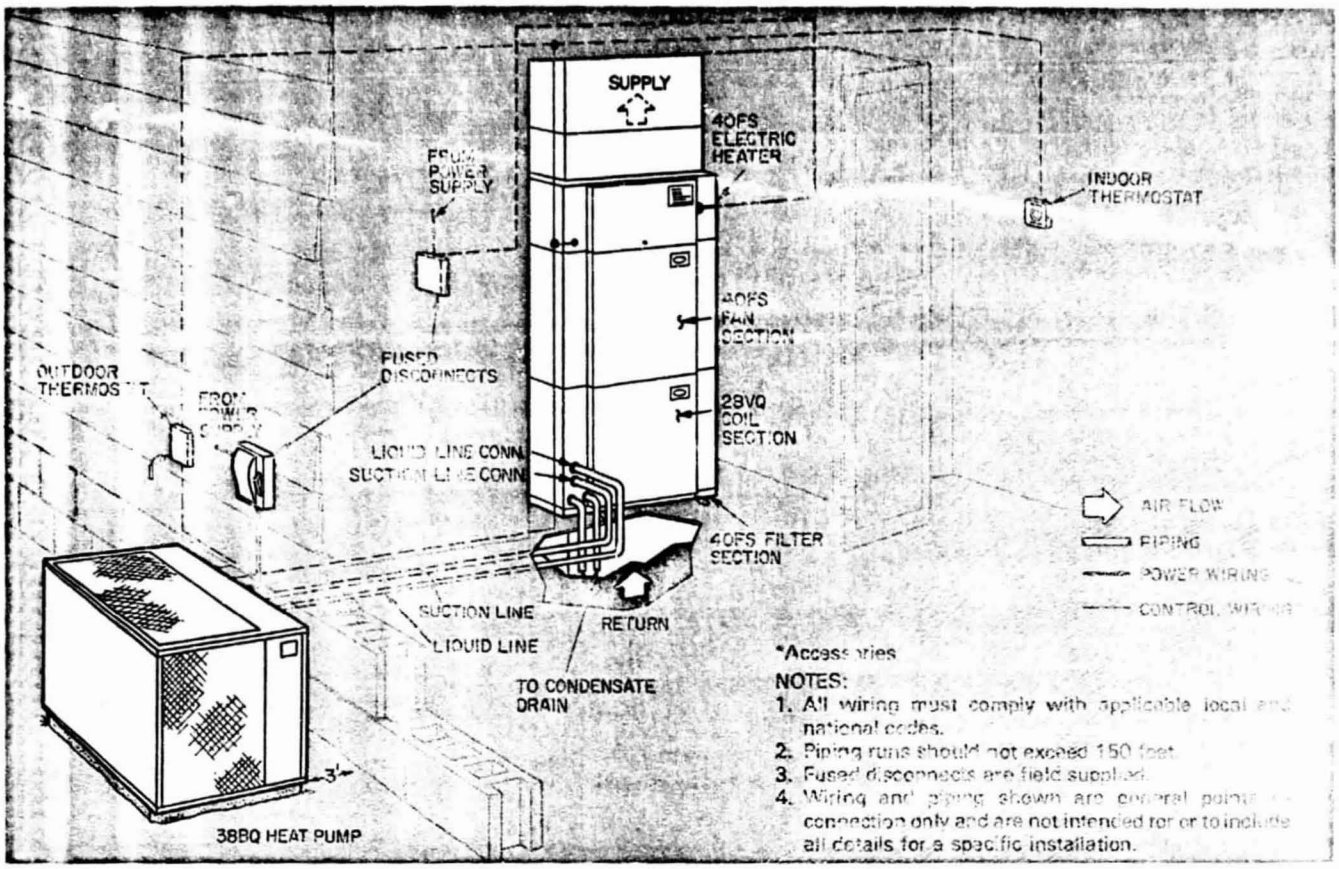

ORIGINAL PAGE IS
OF POOR QUALITY

Guide specifications

Furnish and install an air-to-air electric heat pump (outdoor unit) in combination with a direct expansion fan-coil heat pump (indoor unit) in the location and manner shown on the plan. The units shall be designed and tested for use with Refrigerant 22 and be equipped with refrigerant line fittings which permit mechanical or sweat connection.

Nominal system electrical characteristics shall be _____ v, _____ ph, _____ Hertz. Each unit shall be capable of satisfactory operation within voltage of _____ v to _____ volts.

Total cooling capacity shall be not less than _____ Btuh with indoor unit air quantity of _____ cfm at _____ F wet-bulb temperature coincident with _____ F dry-bulb temperature of air entering outdoor unit. Sensible heat capacity shall be not less than _____ Btuh with _____ F dry-bulb temperature. Compressor power input shall be _____ kw or less at these conditions.

Heating capacity shall be not less than _____ Btuh with air entering outdoor unit at _____ F dry-bulb temperature at 85% relative humidity, and _____ F dry-bulb temperature of air entering indoor unit. Compressor power input shall be _____ kw or less at these conditions. One _____ kw electric resistance heater shall be provided.

Coils shall be constructed with aluminum plate fins mechanically bonded to nonferrous tubing with all joints brazed. Coil shall be _____ rows deep with a nominal fin spacing of _____ fins per in., and shall have a face area of not less than _____ square feet.

Outdoor unit shall contain hermetically sealed compressor with automatically reversible oil pump, internal and external motor protection. Outdoor fan shall be propeller type, arranged for vertical discharge, and direct driven by a factory-lubricated motor of _____ hp or less.

Indoor unit shall operate properly in either vertical upflow or horizontal position with or without ductwork. Unit may be installed *vertically or horizontally* with electric resistance heater, and shall contain refrigerant metering device and indoor fan relay. Fan shall be centrifugal type, direct driven and shall deliver _____ cfm with _____ in. wg external static pressure operating at _____ rpm. Multispeed fan motor shall not exceed _____ horsepower.

Controls and protective devices shall include a crankcase heater, liquid line low pressurestat, suction line accumulator and pressure relief device. Motor-compressor shall have both thermal and current sensitive overload devices and internal high-pressure protection. Outdoor unit wiring shall incorporate a positive acting timer to prevent compressor short cycling if power is interrupted. Device shall prevent compressor from restarting for a 5 minute period. An automatic defrost control shall be included to accomplish defrosting (only if required) every 90 minutes for a period of not more than 10 minutes. A 24-v transformer shall be factory installed and wired on outdoor units for external control circuit.

Maximum dimensions: width _____ in.; depth _____ in., height _____ inches.

System accessories shall include (Indoor Thermostat), (Outdoor Thermostat), (32 Series Motormaster® Head Pressure Control), (Precharged Tubing Package), (Filter Box with Filters), (Electric Resistance Heaters).

Number One
Air Conditioning
Maker

Carrier

Division of
Carrier Corporation
Carrier Parkway • Syracuse, N.Y. 13221

Manufacturer reserves the right to discontinue, or change at any time, specifications or designs without notice and without incurring obligations.

Book	1	4
Tab	5a	5a

Form 38BQ-12P Supersedes 38BQ-11P Printed in U.S.A. 3-79 PC 101 Catalog No. 523-866

SYSTEM DRAWINGS

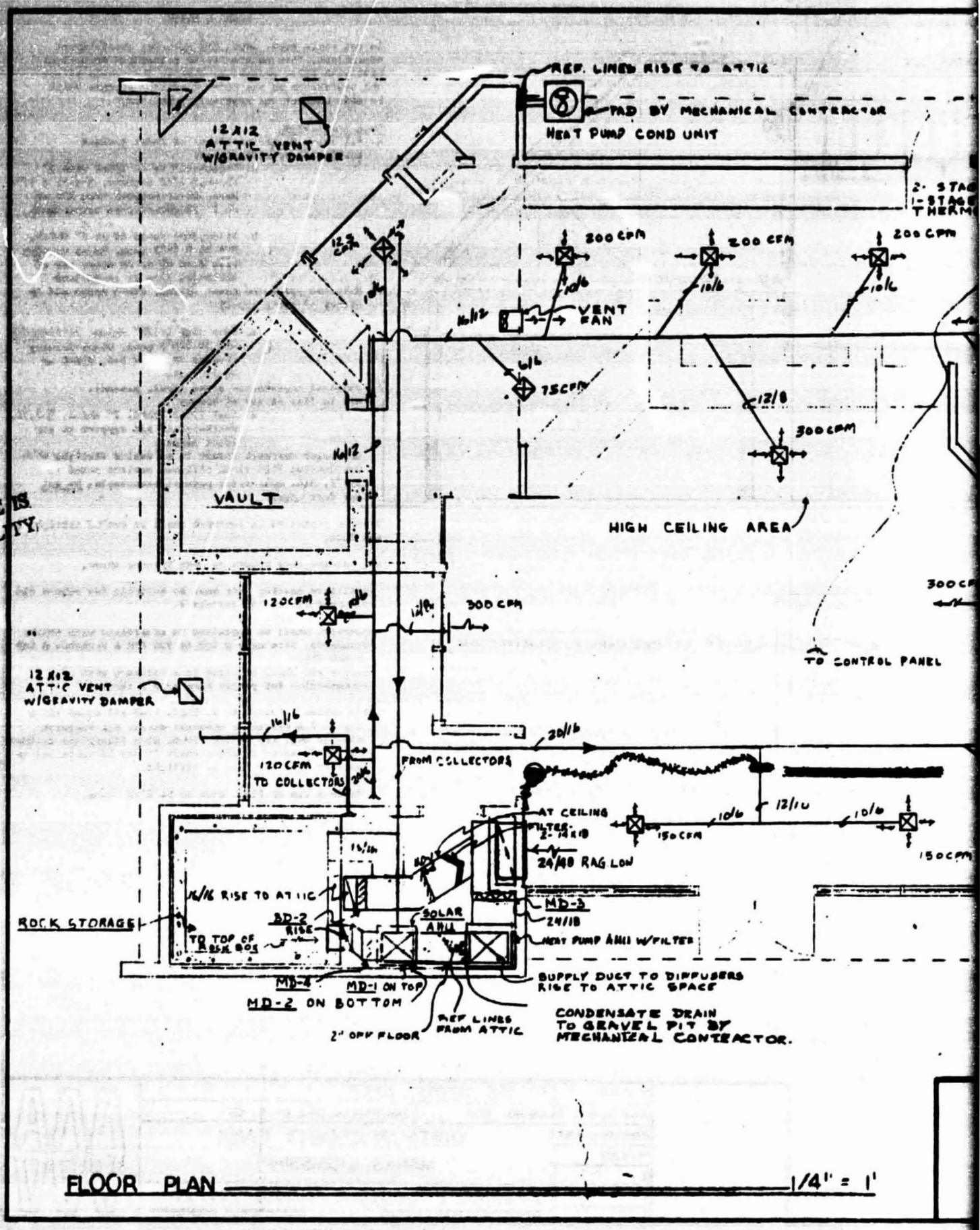

FLOOR PLAN 1/4" = 1'

FOLDOUT FRAME 1

ORIGINAL PAGE IS
OF POOR QUALITY

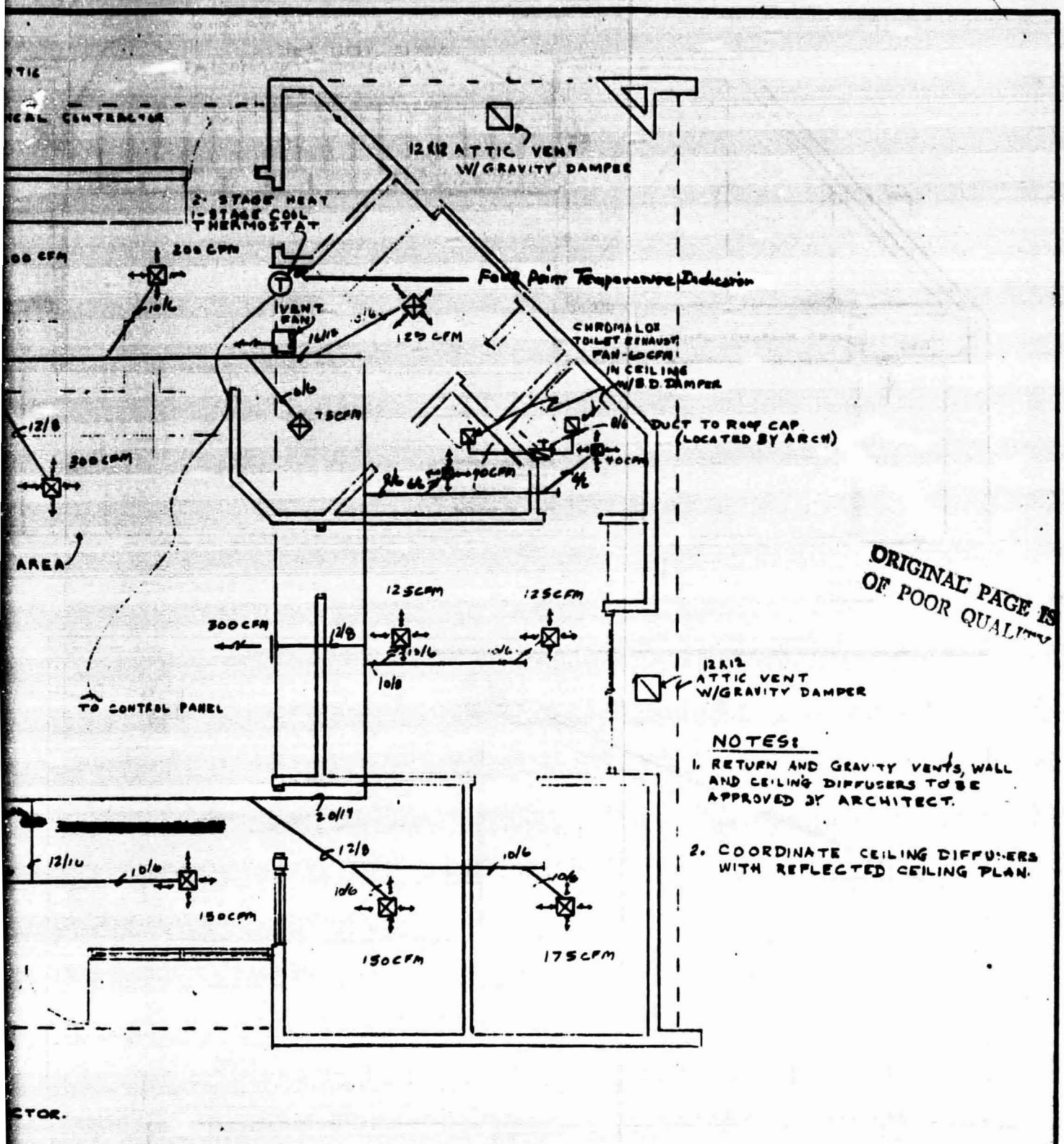

ORIGINAL PAGE IS OF POOR QUALITY

NOTES:

1. RETURN AND GRAVITY VENTS, WALL AND CEILING DIFFUSERS TO BE APPROVED BY ARCHITECT.

2. COORDINATE CEILING DIFFUSERS WITH REFLECTED CEILING PLAN.

DRAWN BY SG	MECHANICAL FLOOR PLAN	
DATE 10-4-1978	JOB NO. 7813	DRAWING NO. M-1 OF 4 OF
CHECKED BY AMA	QUITMAN COUNTY BANK	
REVISION	MARKS, MISSISSIPPI	
1.		
2.	BREWER, GODBOLD & ASSOCIATES, LTD.	
3.	ARCHITECTS & ENGINEERS	CLARKSDALE, MISSISSIPPI

1/4" = 1'

FOLDOUT FRAME 2

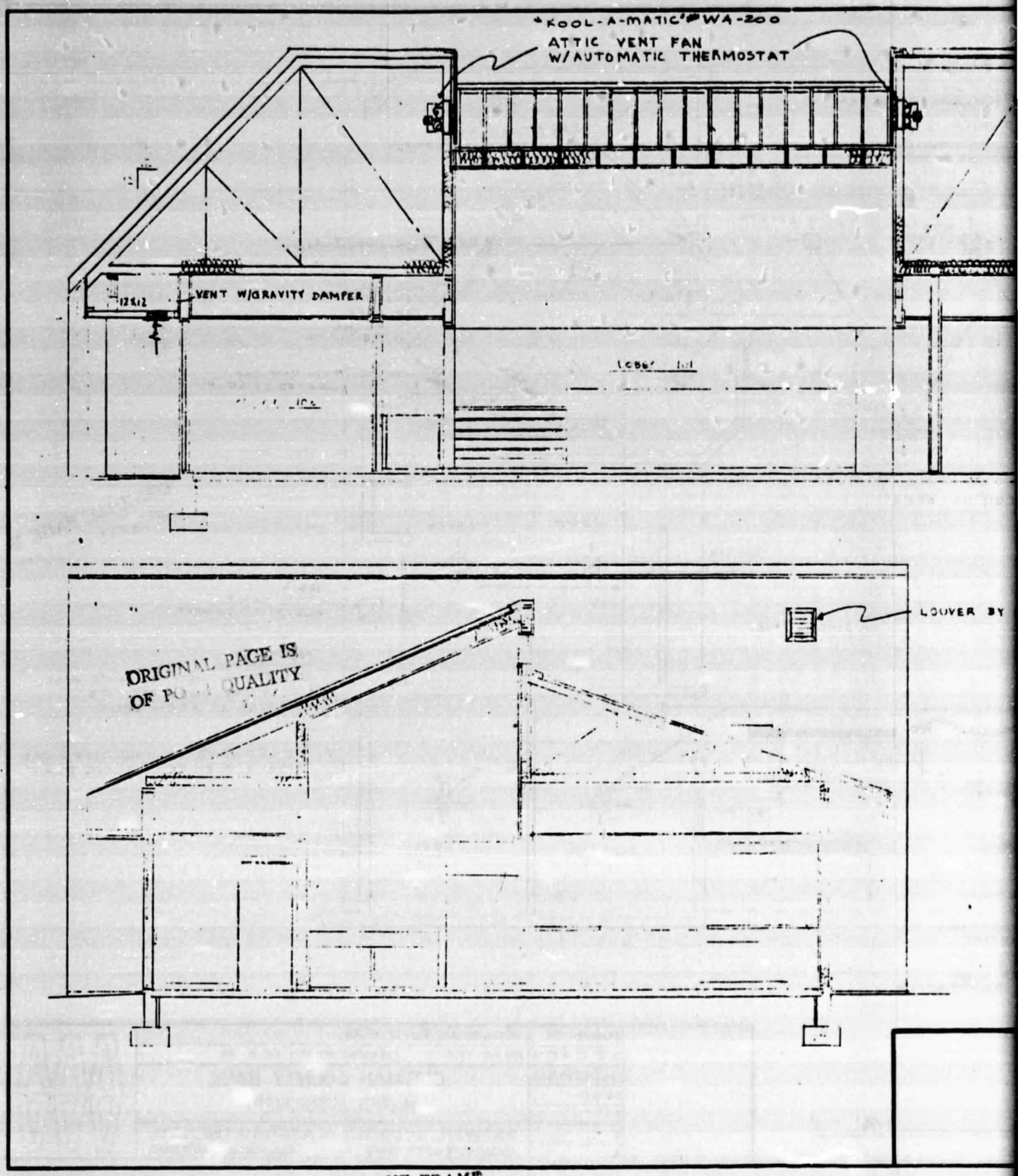

ORIGINAL PAGE IS
OF POOR QUALITY

FOLDOUT FRAME 1

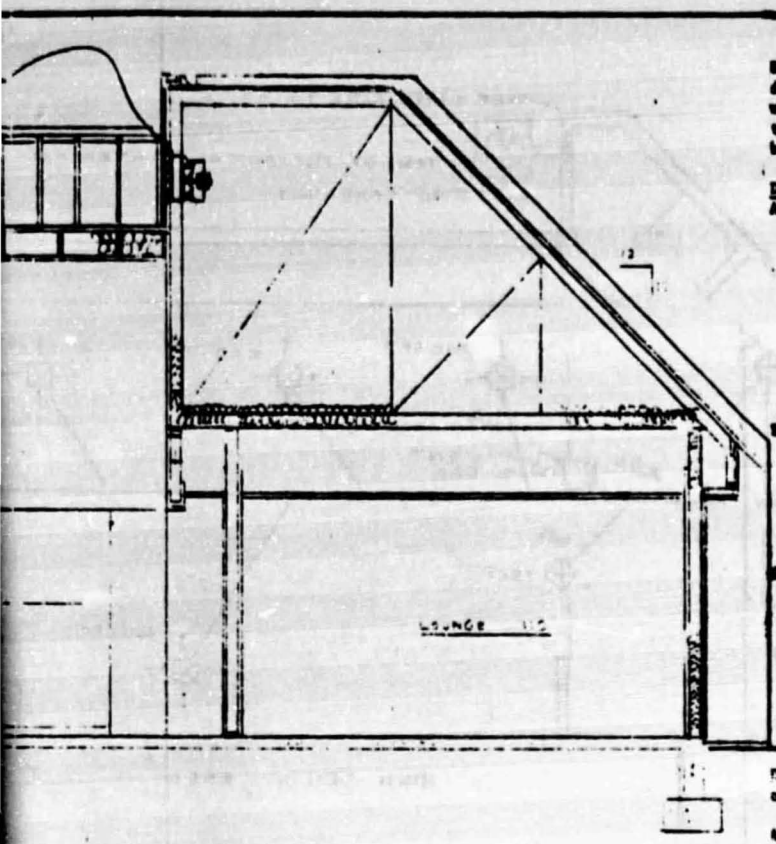

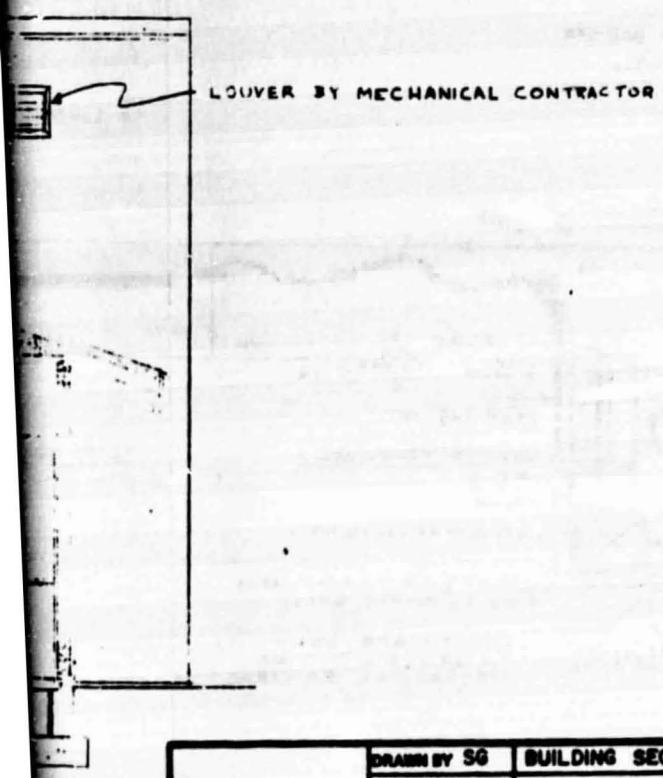

GENERAL NOTES

Do not scale mech. dwgs. [illegible] for exact layout dimensions. This contractor to coordinate mechanical work with other trades. No changes that could affect the operations of the solar & standby systems shall be made without the approval of Solcron.

Duct Insulation.

A. All solar ducts use either of these minimum insulation specifications:

a. Sheetmetal to be lined with 4" thick, 1-1/2# density, R-3.85 @ 75°F mean, Owens-Corning type 250 or JM 1" [illegible] or equivalent.

b. Fiberglass ducts to be 2" thick, R-4.35 @ 75°F mean, Owens Corning type [illegible] or JM micro air [illegible] or equivalent.

B. Unheated protected areas (attic, crawl space add to either of above types):

c. Wrap with 1-1/2" thick, 3/4# density, R-5.36 @ 75°F mean, Owens-Corning type HB 75 or JM R-6, [illegible] or equivalent.

C. Unheated unprotected areas (roof, ground), use in lieu of any of above:

a. Duct liner board, 2" thick, R-8.70, weatherproof and support as per local codes.

All solar ductwork joints to be sealed airtight with Dow Corning #732-11-CL silicone sealant rated at 250°F. Min. equivalent product acceptable. Do not use duct tape.

Dampers installed in ductwork shall be sealed airtight in the duct.

All square duct elbows to have turning vanes.

Auxilliary heating unit must be suitable for return air temperatures of 150 degrees F.

Ductwork shall be installed in accordance with SMACNA standards. Size main @ 700 to 900 FPM & branches @ 600 to 800 FPM.
Supply air shall be sized in accordance with mfg. recommendion for proper flow rate & throw.

Air system: Insure R. A. CIRC. from all rooms via a ducted R.A system or undercut doors. All ductwork dim. on dwg. are inside dimen. size fiberglass ductwork can be used except in areas where it may be subjected to abuse or traffic. Must be airtight.

Maximum run or flex. Duct to be 6'-0" long.

ORIGINAL PAGE IS OF POOR QUALITY

DRAWN BY SG	BUILDING SECTIONS, NOTES	
DATE 10-4-1978	JOB NO. 7813	DRAWING NO. M-2 OF 4 OF
CHECKED BY AMA	QUITMAN COUNTY BANK MARKS, MISSISSIPPI	
REVISION		
1.		
2.	BREWER, GODBOLD & ASSOCIATES, LTD. ARCHITECTS & ENGINEERS CLARKSDALE, MISSISSIPPI	
3.		

FOLDOUT FRAME 2

ORIGINAL PAGE IS
OF POOR QUALITY

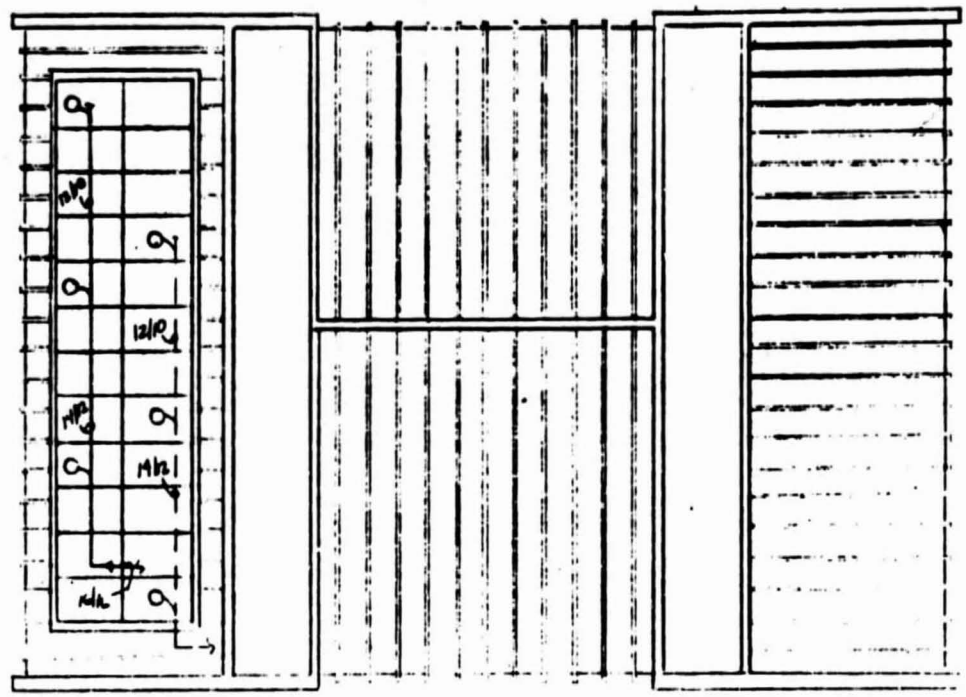

ROOF PLAN 1/8" = 1'

SOLARON FURNISHED EQUIPMENT

1. Collector Panels (Coordinate with solaron installation manual "2000 Series Collector")
   Complete With: A. Hold down clamps & bolts
   B. End caps, port gaskets & perimeter sealant tape
   C. Cap strip: 75" & 33" lengths, with TEE'S, X'S and EL'S.

2. Solaron Air Handling Unit (Coordinate with solaron installation manual "Air Handler"
   Complete With: A. Motorized dampers 1 - 5 (Linkage & motor factory installed)
   B. Motor, pulley & belt (field installed)
   C. Motor relay, contractor or magnetic starter (field supplied & installed)

3. Solaron Control Panel (Coordinate with Solaron installation manual "Controller"
   Complete With: A. Three sensors: T_{co}, T_{ci}.
   B. 2-stage thermostat & subbase.
   C. 120V/24V transformers (Factory installed on panel)

4. Two Backdraft Dampers (Coordinate size & position with HMC.)

Solar AHU - Solar model AU040, 936 CFM, 1370 RPM, 3/4 HP 230/1/60 motor, @ 1.4" ESP.

Dampers - MD - 1 & 2 Solaron to fit AHU
MD - 3 - Ruskin low leakage model CD.50 to fit sheet metal ducts.

Refrigerant lines: Liquid - 1/2"
Vapor - 1/8"

Backup & A/C Equipment

HP-AHU Carrier 40BA009 - Top discharge
115/208/230, 16.0/ 9.2 / 8.0 Amps.
Motor F. L. Amps,
3000 CFM, @ 1.11 ESP
112,000 BTU/H Cooling @ 67°F EWB
with heat pump accessories

Aux. Heat: Carrier resistance heat units
3 - 9.8 KW elements, total 29.4 KW
100,300 BTU/H, 230/3/60 (1-9.8 KW Disconnected, but

Condensing Unit: Carrier 38BQ-008 Heat Pump Unit
84,000 BTU/H @ 45°F SST
at 95°F ambient 230/3/60,
35.2 F. L. Amps, 43.6 Min. Circuit Amps.

NOTE: Electrical Heaters and heat pump condensing unit may operate at the same time.

FOLDOUT FRAME

ORIGINAL PAGE IS
OF POOR QUALITY

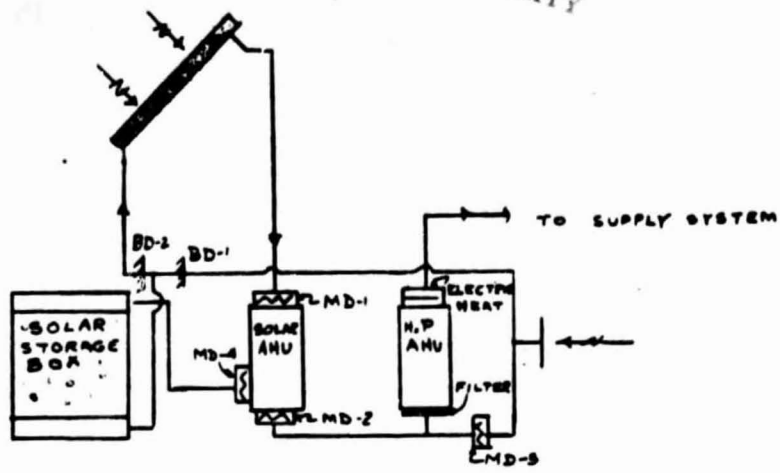

SYSTEM SCHEMATIC

SCALE: NONE

O-OPEN C-CLOSED **SEQUENCE OF OPERATION** PO-PARTLY OPEN FO-FULL OPEN

MODE	BD-1	BD 2	MD-1	MD-2	MD-3	MD-4	SOLAR AHU	HT. PUMP AHU	ELECTRIC HEAT
HTG. FROM COLLECTOR	O	O	O	O	PO	C	ON	ON	OFF
STORING HEAT	C	O	O	C	PO	O	ON	OFF	OFF
HTG. FROM STORAGE	O	C	C	O	PO	O	OFF	ON	OFF
STORING HEAT & A.C.	C	O	O	C	FO	O	ON	ON	OFF
AIR CONDITIONING	C	C	C	C	FO	C	OFF	ON	OFF
HTG. FROM COLLECTOR PLUS BACKUP HEAT	O	O	O	O	PO	C	ON	ON	ON 2nd Stg T'STAT
HTG FROM STORAGE PLUS BACKUP HEAT	O	C	C	O	PO	O	OFF	ON	ON 2nd Stg T'STAT
~~STORING HEAT PLUS AIR CONDITIONING~~	~~C~~	~~O~~	~~O~~	~~C~~	~~FO~~	~~O~~	~~ON~~	~~ON~~	

Disconnected, but in Place)

FOLDOUT FRAME 2

DRAWN BY SG	COLLECTOR PLAN, SYSTEM SCHEMATIC	
DATE 10-4-1978	JOB NO. 7813	DRAWING NO. M-3 OF 4 OF
CHECKED BY AMA	QUITMAN COUNTY BANK MARKS, MISSISSIPPI	
REVISION		
1.		
2.	BREWER, GODBOLD & ASSOCIATES, LTD. ARCHITECTS & ENGINEERS CLARKSDALE, MISSISSIPPI	
3.		

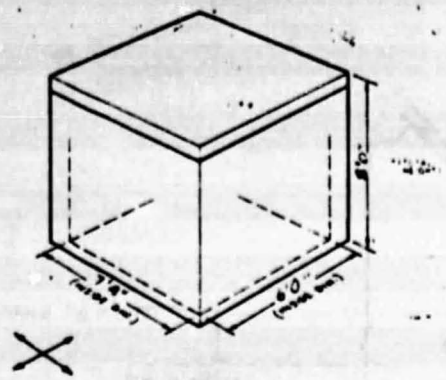

STORAGE BOX OPENINGS

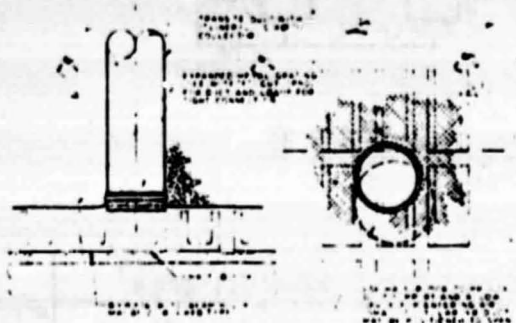

TRANSITE DUCT DETAIL

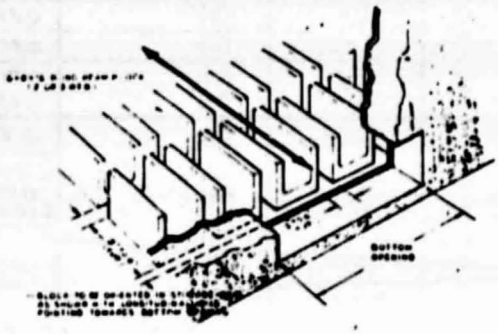

BLOCK LAYOUT PATTERN

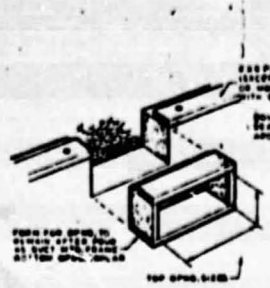

TOP OPENING DETAIL

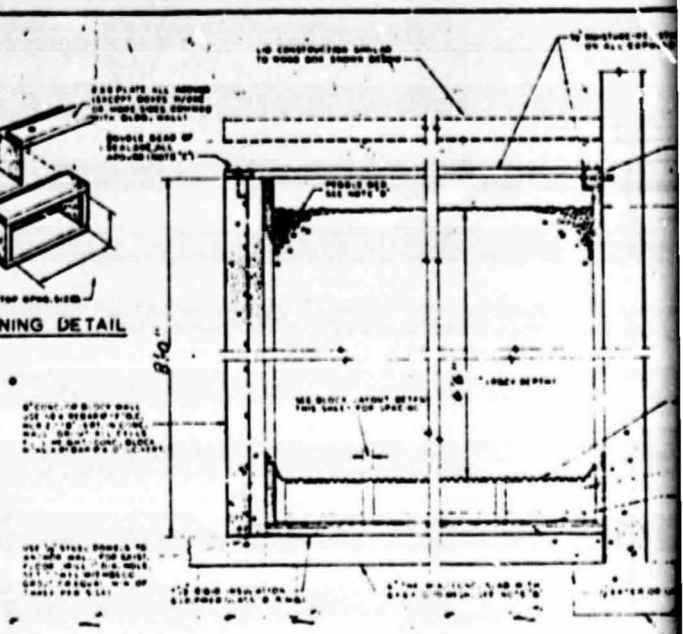

SECTION - HEAT STORAGE BOX
CONCRETE

SECTION - HEAT STORAGE BOX
WOOD

205 Cubic Feet of Rock 3/4" to 1 1/2 in. Diameter

[illegible] Tons @ 100 Lbs/Cubic Feet

FOLDOUT FRAME

SOLARON

HEAT STORAGE UNIT

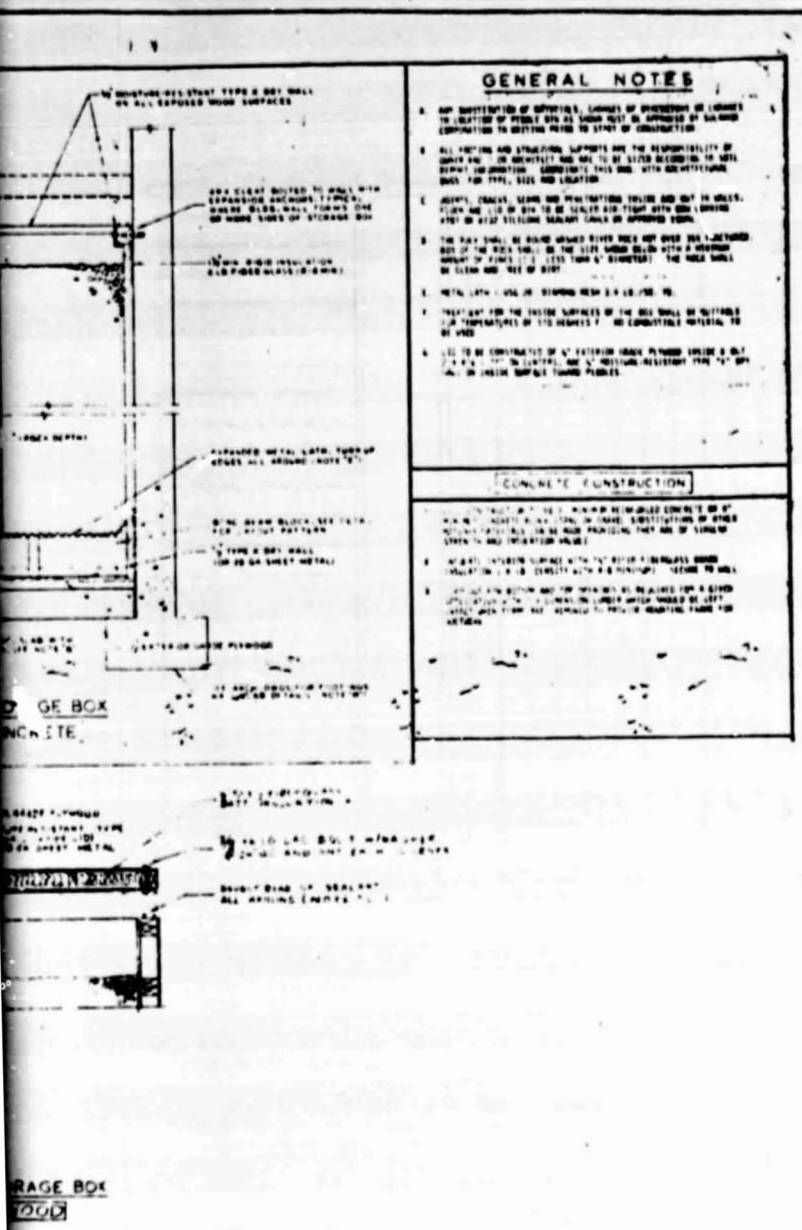

FOLDOUT FRAME

2

DRAWN BY SG	STORAGE BOX DETAILS	
DATE 10-4-1978	JOB NO. 7813	DRAWING NO. M-4 OF 4 OF
CHECKED BY AMA	QUITMAN COUNTY BANK MARKS, MISSISSIPPI	
REVISION		
1.		
2.	BREWER, GODBOLD & ASSOCIATES, LTD. ARCHITECTS & ENGINEERS CLARKSDALE, MISSISSIPPI	
3.		