N O T I C E

THIS DOCUMENT HAS BEEN REPRODUCED FROM MICROFICHE. ALTHOUGH IT IS RECOGNIZED THAT CERTAIN PORTIONS ARE ILLEGIBLE, IT IS BEING RELEASED IN THE INTEREST OF MAKING AVAILABLE AS MUCH INFORMATION AS POSSIBLE

DOE/NASA CONTRACTOR
REPORT

DOE/NASA CR-161558

DESIGN PACKAGE FOR SOLAR DOMESTIC HOT WATER SYSTEM

By Elcam, Inc.
5330 Debbie Lane
Santa Barbara, CA 93111

Under Contract NAS8-32245 with

National Aeronautics and Space Administration
George C. Marshall Space Flight Center, Alabama 35812

For the U. S. Department of Energy

NOV 1980
RECEIVED
NASA STI FACILITY
ACCESS DEPT.

(NASA-CR-161558) DESIGN PACKAGE FOR SOLAR DOMESTIC HOT WATER SYSTEM (Elcam, Inc., Santa Barbara, Calif.) 149 p HC A07/MF A01 CSCL 10A

N80-33867

Unclas
G3/44 29028

U.S. Department of Energy

Solar Energy

TABLE OF CONTENTS

System Performance Specification 1

Introduction 1

Applicable Documents 1

Application of Interim Performance Criteria by Type of System 1

Deviations from Interim Performance Criteria 8

Government Furnished Property 8

Government Directed Requirements 8

Geographic Area 8

System Appendices 8

Appendix A 9

Appendix B 12

Drawing List - Phoenix Site 15

Drawing List - San Diego Site 23

Drawings 27

Transmitted Drawings 126

PRECEDING PAGE BLANK NOT FILMED

1.0 INTRODUCTION

This Performance Specification establishes the requirements for the design and performance of the solar domestic hot water systems to be delivered. It designates the Interim Performance Criteria applicable to the above systems and defines any deviations, if required. The appendices specify the performance for each type and size system and the installation drawings.

2.0 APPLICABLE DOCUMENTS

2.1 Government Documents

Interim Performance Criteria for Solar Heating and Combined Heating/Cooling Systems and Dwellings, January 1, 1975. U.S. Department of Housing and Urban Development

2.2 Contractor Documents

Direct Heating System (Frost Cycle), Dwg. #ESS-3, 15 Nov 76.

Direct Dump Option, Dwg #ESS-5, 15 Nov 76.

2.3 Other Documents

3.0 APPLICATION OF INTERIM PERFORMANCE CRITERIA BY TYPE OF SYSTEM

The application of each paragraph of the Interim Performance Criteria to each type system is provided in the following table.

TABLE I

RESIDENTIAL SYSTEMS, INTERIM PERFORMANCE CRITERIA SUMMARY

SHEET 1 OF 6

APPLICATION

A – APPLICABLE TO SYSTEMS INDICATED
I – APPLICABLE TO SYSTEM AND BUILDING
NA – NOT APPLICABLE

TYPE SYSTEMS

H – HEATING
HC – HEATING AND COOLING
HW – HOT WATER

RESIDENTIAL INTERIM PERFORMANCE CRITERIA PARAGRAPH	TYPE SYSTEMS			RESIDENTIAL INTERIM PERFORMANCE CRITERIA PARAGRAPH	TYPE SYSTEMS		
	H	HC	HW		H	HC	HW
1.1 H and HC System Performance	A	A	A	1.3.1 Collector Efficiency	A	A	A
1.1.1 Heating Design Temperatures	I	I	NA	1.4 Thermal Storage	A	A	A
1.1.2 Cooling Design Temperatures	NA	I	NA	1.4.1 Storage Capacity and Rate	A	A	A
1.1.3 Relative Humidity and Water Vapor Pressure	I	I	NA	1.5 Habitability of Occupied Spaces	A	A	A
1.1.4 Solar Contribution	A	A	A	1.5.1 Heat or Humidity Transfer Effects	I	I	I
1.1.5 Operation Impairment	A	A	A	1.6 Energy Transport Efficiency	A	A	A
1.2 HW System Subsystem Performance	A	A	A	1.6.1 Thermal Losses and Electrical Power	A	A	A
1.2.1 Water Design Temperature	I	I	I	1.7 Control	A	A	A
1.2.2 Storage Design Capacity	A	A	A	1.7.1 Installation and Maintenance	A	A	A
1.2.3 Solar Contribution	A	A	A	1.7.2 Manual Adjustment	A	A	A
1.2.4 Operational Impairment	A	A	A	1.7.3 Inhabited Space Temperature	A	A	NA
1.3 Collector Performance	A	A	A	1.7.4 Hot Water Temperature	A	A	A
				1.8 Auxiliary Energy	A	A	A
				1.8.1 Design Loads	A	A	A

ORIGINAL PAGE IS
OF POOR QUALITY

TABLE I
CONTINUATION SHEET

RESIDENTIAL SYSTEMS, INTERIM PERFORMANCE CRITERIA SUMMARY

SHEET 2 OF 6

RESIDENTIAL INTERIM PERFORMANCE CRITERIA PARAGRAPH	TYPE SYSTEMS			RESIDENTIAL INTERIM PERFORMANCE CRITERIA PARAGRAPH	TYPE SYSTEMS		
	H	HC	HW		H	HC	HW
2.1 System Design Conditions	A	A	A	2.3.2 Pressure Test: Potable Water	A	A	A
2.1.1 Equipment Capabilities	A	A	A	2.3.3 Air Transport Systems	A	A	A
2.1.2 Noise or Erosion-Corrosion	A	A	A	2.4 Collector Adjustment	A	A	A
2.1.3 Operating Conditions	A	A	A	2.4.1 Orientation and Tilt	A	A	A
2.1.4 Fluid Flow in Collectors	A	A	A	2.4.2 Mutual Shadowing	A	A	A
2.1.5 Entrapped Air	A	A	A	2.5 Subsystem Isolation	A	A	A
2.1.6 Thermal Expansion of Fluids	A	A	A	2.5.1 Shutdown in Multi-family Housing	A	A	A
2.1.7 Pressure Drops	A	A	A	2.6 Heat Transfer Fluid Quality	A	A	A
2.1.8 Condensate Removal	NA	A	NA	2.6.1 Liquid Quality	A	A	A
2.2 Mechanical Stresses	A	A	A	2.6.2 Air Quality	A	A	A
2.2.1 Vibration Stress Levels	A	A	A	2.6.3 Fluid Quality	A	A	A
2.2.2 Vibration from Moving Parts	A	A	A	2.6.4 Freezing Protection	A	A	A
2.2.3 Water Hammer	A	A	A	2.7 Piping Supports	A	A	A
2.2.4 Vacuum Relief Protection	A	A	A	2.7.1 Applicable Plumbing Standards	A	A	A
2.2.5 Thermal Changes	A	A	A	2.8 Excessive Pressure and Temperature Protection	A	A	A
2.2.6 Flexible Joints	A	A	A	2.8.1 Relief Valves and Vents	A	A	A
2.3 Leakage Prevention	A	A	A	3.1 Structural Design Basis	A	A	A
2.3.1 Pressure Test: Nonpotable Fluids	A	A	A	3.1.1 Applicable Standards	A	A	A

TABLE I
CONTINUATION SHEET

RESIDENTIAL SYSTEMS, INTERIM PERFORMANCE CRITERIA SUMMARY

SHEET 3 OF 6

RECIDENTIAL INTERIM PERFORMANCE CRITERIA PARAGRAPH	TYPE SYSTEMS			RECIDENTIAL INTERIM PERFORMANCE CRITERIA PARAGRAPH	TYPE SYSTEMS		
	H	HO	HW		H	HO	HW
3.1.2 Service Loads	A	A	A	3.8.2 Constrain Loads	A	A	A
3.2 Failure Loads and Load Capacity	A	A	A	3.9 Ponding Condition	A	A	A
3.2.1 Ultimate Load Combinations	A	A	A	3.9.1 Design Provisions	A	A	A
3.2.2 Ice Loads	A	A	A	4.1 Plumbing and Electrical Installation	A	A	A
3.2.3 Vehicular Loads	I	I	I	4.1.1 Plumbing Codes	A	A	A
3.2.4 Load Capacity	A	A	A	4.1.2 Electrical Codes	A	A	A
3.3 Damage Control	A	A	A	4.2 Fail-Safe Controls	A	A	A
3.3.1 Resistance to Damage	A	A	A	4.2.1 System Failure Prevention	A	A	A
3.3.2 Glazing Design	A	A	A	4.2.2 Automatic Pressure Relief Valves	A	A	A
3.4 Cyclic Loads	A	A	A	4.3. Fire Safety	A	A	A
3.4.1 Deflection Limitations	A	A	A	4.3.1 Applicable Fire Standards	A	A	A
3.5 Cutting of Structural Elements	I	I	I	4.3.2 Penetrations through Fire Rated Assemblies	I	I	I
3.5.1 Design Provisions	I	I	I	4.4 Toxic	A	A	A
3.6 Creep and Residual Deflection	I	I	I	4.4.1 Provisions of Catch Basins	A	A	A
3.6.1 Deflection Limitations	I	I	I	4.4.2 Detection of Toxic and Flammable Fluids	A	A	A
3.7 Hail Resistance	A	A	A	4.5 Safety	I	I	I
3.7.1 Hail Size and Loading	A	A	A	4.5.1 Emergency Egress and Access	I	I	I
3.8 Constraint Loads	A	A	A	4.5.2 Identification and Location of Controls	A	A	A
3.8.1 Foundation Settlement	A	A	A	4.6 Protection of Potable Water and Circulated Air	A	A	A

TABLE I

RESIDENTIAL SYSTEMS, INTERIM PERFORMANCE CRITERIA SUMMARY

SHEET 4 OF 6

APPLICATION

A – APPLICABLE TO SYSTEMS INDICATED
I – APPLICABLE TO SYSTEM AND BUILDING
NA – NOT APPLICABLE

TYPE SYSTEMS

H – HEATING
HC – HEATING AND COOLING
HW – HOT WATER

RESIDENTIAL INTERIM PERFORMANCE CRITERIA PARAGRAPH	TYPE SYSTEMS			RESIDENTIAL INTERIM PERFORMANCE CRITERIA PARAGRAPH	TYPE SYSTEMS		
	H	HC	HW		H	HC	HW
4.6.1 Contamination by Materials	A	A	A	5.2.4 Leakage	A	A	A
4.6.2 Separation of Circulation Loops	A	A	A	5.2.5 Deterioration of Gaskets and Sealants	A	A	A
4.6.3 Backflow Prevention	A	A	A	5.2.6 Transmission Losses Due to Outgassing	A	A	A
4.6.4 Growth of Fungi	A	A	A	5.3 Chemical Compatibility of Components	A	A	A
4.7 Excessive Surface Temperatures	A	A	A	5.3.1 Materials/Transfer Fluid Compatibility	A	A	A
4.7.1 Protection from Heated Components	A	A	A	5.3.2 Corrosion of Dissimilar Materials	A	A	A
5.1 Effects of External Environment	A	A	A	5.3.3 Corrosion by Leachable Substance	A	A	A
5.1.1 Solar Degradation	A	A	A	5.3.4 Effects of Decomposition Products	A	A	A
5.1.2 Soil Corrosion	A	A	A	5.4 Components Involving Moving Parts	A	A	A
5.1.3 Airborne Pollutants	A	A	A	5.4.1 Wear and Fatigue	A	A	A
5.1.4 Dirt Retention on Cover Plate Surface	A	A	A	6.1 Accessibility for Maintenance	A	A	A
5.1.5 Abrasive Wear	A	A	A	6.1.1 Access for System Maintenance	A	A	A
5.1.6 Fluttering by Wind	A	A	A	6.1.2 Access for System Monitoring	A	A	A
5.2 Temperature and Pressure Resistance	A	A	A	6.1.3 Draining and Filling of Liquids	A	A	A
5.2.1 Thermal Degradation	A	A	A	6.1.4 Flushing of Liquids Subsystems	A	A	A
5.2.2 Deterioration of Heat Transfer Fluids	A	A	A	6.1.5 Filters	A	A	A
5.2.3 Thermal Cycling Stresses	A	A	A	6.1.6 Potable Water Shutoff	A	A	A

ORIGINAL PAGE IS
OF POOR QUALITY

TABLE I

RESIDENTIAL SYSTEMS, INTERIM PERFORMANCE CRITERIA SUMMARY

SHEET 5 OF 6

APPLICATION

A – APPLICABLE TO SYSTEMS INDICATED
I – APPLICABLE TO SYSTEM AND BUILDING
NA – NOT APPLICABLE

TYPE SYSTEM

H – HEATING
HC – HEATING AND COOLING
HW – HOT WATER

RESIDENTIAL INTERIM PERFORMANCE CRITERIA PARAGRAPH	TYPE SYSTEMS			RESIDENTIAL INTERIM PERFORMANCE CRITERIA PARAGRAPH	TYPE SYSTEMS		
	H	HC	HW		H	HC	HW
6.2 Installation, Operation and Maintenance Manual	A	A	A	7.3.1 Space Use	I	I	I
6.2.1 Installation Instructions	A	A	A	7.3.2 Shading of Adjacent Structures	I	I	I
6.2.2 Maintenance and Operation Instructions	A	A	A	7.3.3 Impact on Environment	I	I	I
6.2.3 Maintenance Plan	A	A	A	7.3.4 View	I	I	I
6.2.4 Replacement Parts	A	A	A	8.1 Interference with Mechanical Operation	I	I	I
6.3 Repair and Service Personnel	A	A	A	8.1.1 Blockage of Solar Subsystem	I	I	I
6.3.1 Maintenance of H and HC Systems	A	A	A	8.1.2 Shading of Collector	I	I	I
6.3.2 Maintenance of DHW System	A	A	A	8.1.3 Sensor Location	I	I	I
7.1 Design	I	I	I	8.2 Mechanical and Electrical Functioning of Dwelling and Site	I	I	I
7.1.1 Dwelling Design	I	I	I	8.2.1 Exhaust and Venting	I	I	I
7.1.2 Mobile Home Design	I	I	I	8.2.2 Utilities	I	I	I
7.1.3 Site Design	I	I	I	8.3 Mechanical and Electrical Functioning of Connections	I	I	I
7.1.4 Passive Use of Solar Energy	I	I	I	8.3.1 Plumbing Connections	I	I	I
7.2 Adequate Space	I	I	I	8.3.2 Electrical Connections	I	I	I
7.2.1 Collector Area	I	I	I	9.1 Structural Integrity	I	I	I
7.2.2 Storage Area	I	I	I	9.1.1 Movement in Adjacent Structures	I	I	I
7.2.3 Utility Chases	I	I	I	9.2 Structural Integrity of Dwelling	I	I	I
7.3 Functioning of Dwelling Site	I	I	I				

TABLE I
CONTINUATION SHEET

RESIDENTIAL SYSTEMS, INTERIM PERFORMANCE CRITERIA SUMMARY

SHEET 6 of 6

RESIDENTIAL INTERIM PERFORMANCE CRITERIA PARAGRAPH	TYPE SYSTEMS			RESIDENTIAL INTERIM PERFORMANCE CRITERIA PARAGRAPH	TYPE SYSTEMS		
	H	HC	HW		H	HC	HW
9.2.1 Loads	I	I	I	11.3.1 Material Compatibility	A	A	A
9.2.2 Penetration of Structural Members	I	I	I	12.1 Maintainability of H, HC, HW Systems	I	I	I
9.3 Structural Connections	I	I	I	12.1.1 Accessibility	I	I	I
9.3.1 Structural Connections	I	I	I	12.1.2 Misuse	I	I	I
9.3.2 Brittle Sub-system	I	I	I	12.1.3 Permanent Maintenance Accessories	I	I	I
9.3.3 Strength and Stiffness	I	I	I	12.2 Maintainability of Dwelling and Site	I	I	I
10.1 Safety of Dwelling and Site	I	I	I	12.2.1 Accessibility	I	I	I
10.1.1 Fire	I	I	I	12.2.2 Ice Dams	I	I	I
10.1.2 Accidents	I	I	I	12.3 Connections	I	I	I
11.1 Durability	I	I	I	12.3.1 Accessibility	I	I	I
11.1.1 Vegetation	I	I	I	13.1 Visual Characteristics of Dwelling and Site	I	I	I
11.2 Durability and Reliability of Dwelling and Site	I	I	I	13.1.1 Dwelling	I	I	I
11.2.1 Chemical Corrosion	A	A	A	13.1.2 Neighborhood	I	I	I
11.2.2 Heat and Moisture	I	I	I				
11.2.3 Exterior Penetrations	I	I	I				
11.3 Durability and Reliability of Connections	A	A	A				

4.0 DEVIATIONS FROM INTERIM PERFORMANCE CRITERIA

No deviations required.

5.0 GOVERNMENT FURNISHED PROPERTY

5.1 Site Data Acquisition Subsystem (SDAS) to be furnished.

6.0 GOVERNMENT DIRECTED REQUIREMENTS

7.0 GEOGRAPHIC AREA

7.1 Domestic hot water systems for single family residences are for installation in any region of the United States. Operating altitude is not restricted.

8.0 SYSTEM APPENDICES

8.1 Appenidix A - Direct Heating System, Single Family Residence, Model Number 250C with Direct Dump Option.

8.2 Appendix B - Direct Heating System, Single Family Residence, Model Number 250C with Direct Dump Option.

APPENDIX A

1.0 SYSTEM IDENTIFICATION

This Appendix defines the performance and installation drawings for domestic water heating systems, Model Number 250C with Direct Dump Option.

2.0 SYSTEM PERFORMANCE SHEETS

2.1 Site

The system is to be installed in a single family residence located at the Encinitas Road Station, in the County of San Diego, State of California.

2.2 Hot Water

Seventy-five gallons of potable hot water shall be delivered per day at temperatures no less than 140°F. Recovery rate shall be no less than 23.0 gallons/hour from 60°F. to 140°F. (based upon input to storage from the solar system and/or the operation of two installed 4.5 KW electric elements as necessary). The average hot water heating load will be 1.79×10^6 BTU/month of which no more than 30%* is provided by auxiliary energy on an annualized basis.

2.3 Operating Requirements

The maximum electrical energy required to operate the complete solar system, excluding the two 4.5 KW elements, at its rated capacity shall be no greater than 0.150KW. The average yearly energy required to drive the system (including control energy) shall be no greater than 400 KWH.

* Note: This figure is an annualized average based on an expected average system efficiency of 40%, a fixed tilt angle of 30°, and insolation data from La Jolla, California.

2.4 Physical Data

The following subsystems shall have

	Design Life no less than	Weight (filled) no greater than	Installation Dimension
Collector	10 years	3.1 lb/ft^2	48-3/4"x96-3/4"x3-7/16"
Energy Transport Insulated Piping	10 years	.4 lb/li ft	1.625" dia
Pump	10 years	12 lb	4-7/8"x5"x7-5/16"
Controller	10 years	5 lb	6-3/4"x5-1/2"x2-1/4"
Pre-heat and Storage Tank	10 years	580 lb	58-1/4"x20-1/2"

3.0 INSTALLATION DRAWING SHEETS

Drawing #	Title
ESE-1	Collector
ESE-2	Solar Tank
ESE-3	Electric Tank
ESE-6	CASCADE Autocontrol
ESE-8	S106B Relay
ESE-9	CASCADE Valve
ESE-15	Pump - Grundfos 25-42-SF

4.0 EXISTING MODEL 250C consists of the following:

1. 64 sq. ft. total area (60 sq. ft. effective absorber area) in two collectors of header configuration with an efficiency as described in Figure 1.1, page 2 of the updated proposal dated 9 June 76.

2. 104 gallons of storage capacity in two tanks. The heat loss at design temperatures is 246 BTU/ hr. from each tank.

3. A control system as described in the proposal and update.

4. A transport system with approximately sixty feet of 3/4 in., Type M copper tubing (7/8 inch O.D.) covered with 1-5/8 inch O.D. insulation (3/8 inch wall). The flow rate is 2.5 gpm.

5. Direct Dump System which includes: three port DD valve; pressure switch; vacuum relief valve; check valve; air vent valve; Direct Dump electronics package.

5.0 Solar insolation for which the existing system is rated against are data from Santa Maria, California, found on page 17 of ASHRAE's Low Temperature Engineering Application of Solar Energy (1967). In addition, since 19 September 76, insolation in the plane of the collectors has been measured and recorded at the Operating Prototype.

APPENDIX B

1.0 SYSTEM IDENTIFICATION

This Appendix defines the performance and installation drawings for domestic water heating systems, Model Number 250C with Direct Dump Option.

2.0 SYSTEM PERFORMANCE SHEETS

2.1 Site

The system is to be installed at Arizona State University Farm House #1, Tempe, Arizona 85281.

2.2 Hot Water

Seventy-five gallons of potable hot water shall be delivered per day at temperatures no less than 140°F. Recovery rate shall be no less than 23.0 gallons/hour from 60°F. to 140°F. (based upon input to storage from the solar system and/or the operation of two installed 4.5KW electric elements as necessary). The average hot water heating load will be 1.79×10^6 BTU/month of which no more than 15%* is provided by auxiliary energy on an annualized basis.

2.3 Operating Requirements

The maximum electrical energy required to operate the complete solar system, excluding the two 4.5 KW elements, at its rated capacity shall be no greater than 0.150 KW. The average yearly energy required to drive the system (including control energy) shall be no greater than 400 KWH.

---

* Note: This figure is an annualized average based on an expected average system efficiency of 40%, a fixed collector tilt angle of 30°, and insolation data from Phoenix, Arizona.

2.4 Physical Data

The following subsystems shall have

	Design Life no less than	Weight (filled) no greater than	Installation Dimension
Collector	10 years	3.1 lb/ft^2	48-3/4"x96-3/4"x3-7/16"
Energy Transport Insulated Piping	10 years	.4 lb/li ft	1.625" dia
Pump	10 years	12 lb	4-7/8"x5"x7-5/16"
Controller	10 years	5 lb	6-3/4"x5-1/2"x2-1/4"
Pre-heat and Storage Tank	10 years	580 lb	58-1/4"x20-1/2"

3.0 INSTALLATION DRAWING SHEETS

Drawing #	Title
ESE-1	Collector
ESE-2	Solar Tank
ESE-3	Electric Tank
ESE-6	CASCADE Autocontrol
ESE-8	S106B Relay
ESE-9	CASCADE Valve
ESE-15	Pump - Grundfos 25-42-SF

4.0 EXISTING MODEL 250C consists of the following:

1. 64 sq. ft. total area (60 sq. ft. effective absorber area) in two collectors of header configuration with an efficiency as described in Figure 1.1, page 2 of the updated proposal dated 9 June 76.

2. 104 gallons of storage capacity in two tanks. The heat loss at design temperatures is 246 BTU/ hr. from each tank.

3. A control system as described in the proposal and update.

4. A transport system with approximately sixty feet of 3/4 in., Type M copper tubing (7/8 inch O.D.) covered with 1-5/8 inch O.D. insulation (3/8 inch wall). The flow rate is 2.5 gpm.

5. Direct Dump System which includes: three port DD valve; pressure switch; vacuum relief valve; check valve; air vent valve; Direct Dump electronics package.

5.0 Solar insolation for which the existing system is rated against are data from Santa Maria, California, found on page 17 of ASHRAE's Low Temperature Engineering Application of Solar Energy (1967). In addition, since 19 September 76, insolation in the plane of the collectors has been measured and recorded at the Operating Prototype.

AS INSTALLED DRAWING LIST - PHOENIX

CONTRACT NAS8-32245

ESC-12

SUNSPOT CASCADE SOLAR DOMESTIC WATER HEATING SYSTEMS

ELCAM, INC.

SANTA BARBARA, CA.

AUGUST 1977

LEVEL S - SYSTEM CONFIGURATIONS		DRAWING NUMBER	PAGE NR
S5	Direct Dump Option	ESS-5	27
LEVEL E - ELEMENTS			
E1	Collector	ESE-1	28/29
E2	Solar Tank	ESE-2	30
E3	Electric Tank	ESE-3	31
E9	CASCADE Valve	ESE-9	32
E15	Pump- Grundfos UP25-42SF	ESE-15	
E18	Pump Assembly	ESE-18	
E19	CASCADE Autocontrol Assembly	ESE-19	

LEVEL P - PARTS		DRAWING NUMBER	Page Nr
COLLECTOR			
CP1	Absorber Snap Fin	ESP-C1	33
CP2	Absorber Waterway	ESP-C2	34
CP3	Side Channel	ESP-C3	35
CP4	Cove Strip	ESP-C4	36
CP5	Cross Channel	ESP-C5	37
CP6	Absorber Restraint	ESP-C6	38
CP7	Gaskets	ESP-C7	39
CP8	Cover - Glasteel	ESP-C8	40
CP9	Fiberglass Cover Assembly	ESP-C9	41
CP10	Rubber Grommet	ESP-C10	42
CP11	Rear Insulation/Aluminum Sheet	ESP-C11	43
CP12	Side Insulation	ESP-C12	44
CP13	Pop Rivets	ESP-C13	45
CP14	Corner Brackets	ESP-C14	46
CP15	Label	ESP-C15	47
CP16	Waterway Cap	ESP-C16	48
CP17	Channel Box Assembly	ESP-C17	49/50
CP18	Backing Sheet	ESP-C18	51
CP19	Sealant	ESP-C19	52
CP20	Sealing Tape	ESP-C20	53

Drawing List
Contract NAS8-32245

AUTOCONTROL		DRAWING NUMBER	Page Nr
AP1	Cover	ESP-A1	54/55
AP2	Label - Autocontrol	ESP-A2	56
AP3	Base Plate	ESP-A3	57
AP4	Stand Off	ESP-A4	58
AP5	Heat Sink	ESP-A5	59
AP6	Screw - Self Tapping	ESP-A6	60
AP8	Printed Wiring Board Assembly	ESP-A8	61
AP9	I.C. Socket	ESP-A9	62
AP10	I.C. LM 324N - Quad Op Amp	ESP-A10	63
AP11	I.C. CD 4011 Logic Chip	ESP-A11	64
AP12	Transistor 2N 4401	ESP-A12	65
AP13	Transistor 2N4403	ESP-A13	66
AP14	Triac (Thyristor) 2N6070A	ESP-A14	67
AP15	Regulator UA7812	ESP-A15	68
AP16	Relay LCIC-UA-DC12	ESP-A16	69
AP17	Switch SPST	ESP-A17	70
AP18	Switch, Center Off SPDT	ESP-18	71
AP19	Diode IN 4002	ESP-A19	72
AP20	ZENER Diode IN 5231B	ESP-A20	73
AP21	LED Lamp	ESP-A21	74
AP23	Fuse	ESP-A23	75
AP24	Capacitor 1000 MF	ESP-A24	76
AP25	Capacitor 100 MF	ESP-A25	77
AP28	Resistor 20K	ESP-A28	78
AP29	Resistor 75K	ESP-A29	79

Drawing List
Contract NAS8-32245

		DRAWING NUMBER	Page Nr
AUTOCONTROL (continued)			
AP30	Resistor 5.11K	ESP-A30	80
AP31	Resistor 0.8K	ESP-A31	
AP32	Resistor 2.0K	ESP-A32	81
AP33	Resistor 1.2K	ESP-A33	
AP34	Resistor 1.0K	ESP-A34	82
AP35	Resistor 10 K	ESP-A35	83
AP36	Resistor 0.39K	ESP-A36	84
AP37	Resistor 100K	ESP-A37	85
AP38	Resistor 2.2K	ESP-A38	86
AP39	Resistor 0.68K	ESP-A39	87
AP40	Resistor 2K	ESP-A40	
AP41	Resistor 4.75K	ESP-A41	88
AP42	Resistor 4.64K	ESP-A42	89
AP43	Resistor 4.87K	ESP-A43	
AP44	Resistor 160K	ESP-A44	90
AP45	Potentiometer	ESP-A45	91
AP46	Square Barrel Terminal	ESP-A46	92
AP48	Screw, Pan Head	ESP-A48	93
AP51	Nut Hex	ESP-A51	94
AP52	I.C. LM3911 Sensor	ESP-A52	95

Drawing List
NAS8-32245

AUTOCONTROL (continued)		DRAWING NUMBER	Page Nr.
AP53	Sensor Cartridge	ESP-A53	96
AP54	Resistor - Calibration	ESP-A54	97
AP57	Sensor Cable Assembly	ESP-A57	98
AP58	Flag Terminal	ESP-A58	99
AP60	Washer - Flat	ESP-A60	100
AP61	Insulation Shrinkable	ESP-A61	101
AP62	Cable	ESP-A62	102
AP63	Casting Compound - Epoxy	ESP-A63	103
AP64	Label Circuit Board	ESP-A64	104
AP65	Label, Control	ESP-A65	105
AP66	Washer, Flat	ESP-A66	106
AP67	Washer, Lock Spring	ESP-A67	107
AP68	Lead Set	ESP-A68	108/109
AP69	Mounting Bracket	ESP-A69	
AP71	Switch, Low Pressure	ESP-A71	110
AP72	Wiring Diagram, Direct Dump Valve	ESP-A72	111
AP73	Circuit Board Assembly, Direct Dump	ESP-A73	
AP75	Lead Set "A"	ESP-A75	
AP76	Standoff, Male-Female	ESP-A76	
AP77	Cable, Direct Dump	ESP-A77	
AP78	Cable, Pressure Switch	ESP-A78	
AP79	Fuseholder	ESP-A79	
AP80	Bracket Strain Relief	ESP-A80	
AP81	Capacitor, 2.2 MF	ESP-A81	
AP82	Capacitor, .012 MF	ESP-A82	
AP83	Capacitor, .033 MF	ESP-A83	

AUTOCONTROL (Continued)		DRAWING NUMBER	Page Nr
AP84	Capacitor, 2200 MF	ESP-A84	
AP85	Resistor 3.3K	ESP-A85	
AP86	Resistor, 3.3M	ESP-A86	
AP87	Resistor, .12K	ESP-A87	
AP88	Transformer	ESP-A88	
AP89	Relay, DPDT	ESP-A89	
AP90	Box, Electric	ESP-A90	
AP91	Circuit Board Assembly	ESP-A91	
AP92	Circuit Board Assembly, Dump Option	ESP-A92	
AP93	Cable	ESP-A93	
AP94	Cable, Power, 24V	ESP-A94	

STORAGE TANK			
TP2	Sensor Restraint Plate	ESP-T2	112
TP5	Gasket	ESP-T5	113

LEVEL I - INSTALLATION			
I1	Pipe Hanger	ESI-1	114
I2	Check Valve	ESI-2	115
I3	P & T Valve	ESI-3	116
I5	Gate Valve	ESI-5	117
I6	Pressure Relief Valve	ESI-6	118
I7	Housing	ESI-7	119

LEVEL I - INSTALLATION (continued)		DRAWING NUMBER	Page Nr
I10	Cable Connector	ESI-10	
I12	Tempering Valve	ESI-12	120
I13	S106B Relay Assembly	ESI-13	
I14	Vent Valve, Air	ESI-14	121
I15	Check Valve	ESI-15	122

SAN DIEGO

DRAWING LIST

CONTRACT NAS8-32245

ESC-7a-S.D.

SUNSPOT CASCADE SOLAR DOMESTIC WATER HEATING SYSTEM

ELCAM, INC.

SANTA BARBARA, CA

REVISED APRIL 1978

LEVEL S - SYSTEM CONFIGURATIONS		DRAWING NUMBER	Page Nr
58	SUNSPOT Gas Cascade	ESS-8	123

LEVEL E - ELEMENTS			
E1	Collector	ESE-1	28/29
E2	Solar Tank	ESE-2	30
E3	Electric Tank	ESE-3	31
E4	Gas Tank	ESE-4	124
E9	CASCADE Valve	ESE-9	32
E15	Pump - Grundfos UP25-42SF	ESE-15	
E20	CASCADE Model #150 Autocontrol Assembly	ESE-20	

Drawing List
Contract NAS8-32245

LEVEL P - PARTS		DRAWING NUMBER		Page Nr
COLLECTOR				
CP1	Absorber Snap Fin	ESP-C1		33
CP2	Absorber Waterway	ESP-C2		34
CP3	Side Channel	ESP-C3		35
CP4	Cove Strip	ESP-C4		36
CP5	Cross Channel	ESP-C5		37
CP6	Absorber Restraint	ESP-C6		38
CP7	Gaskets	ESP-C7		39
CP10	Rubber Grommet	ESP-C10		42
CP11	Rear Insulation/Aluminum Sheet	ESP-C11		43
CP12	Side Insulation	ESP-C12		44
CP13	Pop Rivets	ESP-C13		45
CP14	Corner Brackets	ESP-C14		46
CP15	Label	ESP-C15		47
CP16	Waterway Cap	ESP-C16		48
CP17	Channel Box Assembly	ESP-C17	2 sheets	49/50
CP18	Backing Sheet	ESP-C18		51
CP19	Sealant	ESP-19		52
CP20	Sealing Tape	ESP-C20		53
CP21	Glass Cover	ESP-C21		125

Drawing List
Contract NAS8-32245

LEVEL I - INSTALLATION		DRAWING NUMBER	Page Nr
11	Pipe Hanger	ESI-1	114
12	Check Valve	ESI-2	115
13	P & T Valve	ESI-3	116
15	Gate Valve	ESI-5	117
16	Pressure Relief Valve	ESI-6	118
17	Housing	ESI-7	119
19	Flexible Connection	ESI-9	
110	Cable Connector	ESI-10	
114	Vent Valve, Air	ESI-14	121

Drawing List
Contract NAS8-32245

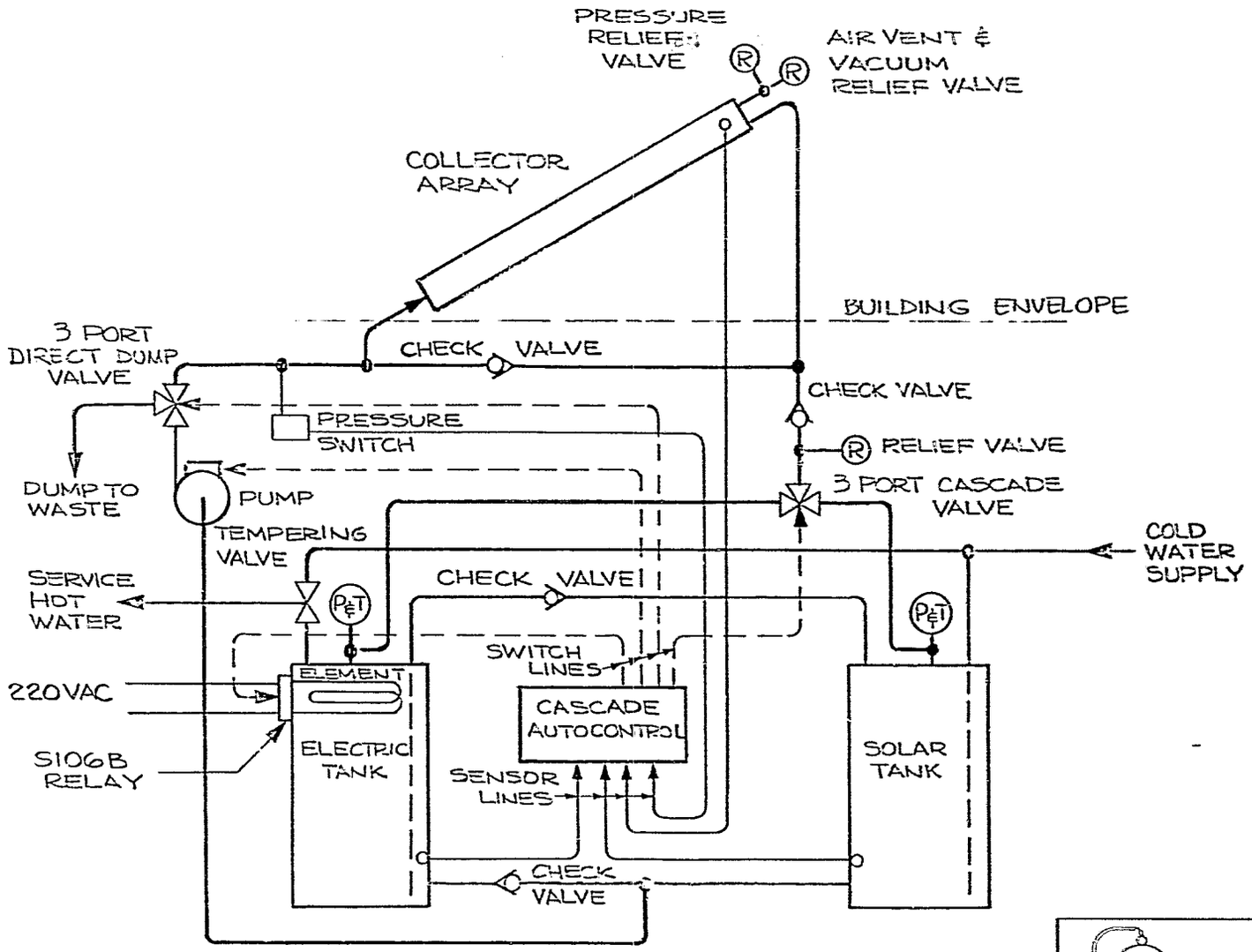

ELCAM, INC.

DIRECT DUMP OPTION

NONE

5 NOV 76 ESS-5

ORIGINAL PAGE IS OF POOR QUALITY

NOTES:

1. ASSEMBLE PER ENGINEERING SPEC

2. INSTALL LABEL IN LOCATION SHOWN MARK WITH MOD NO. & SER NO.

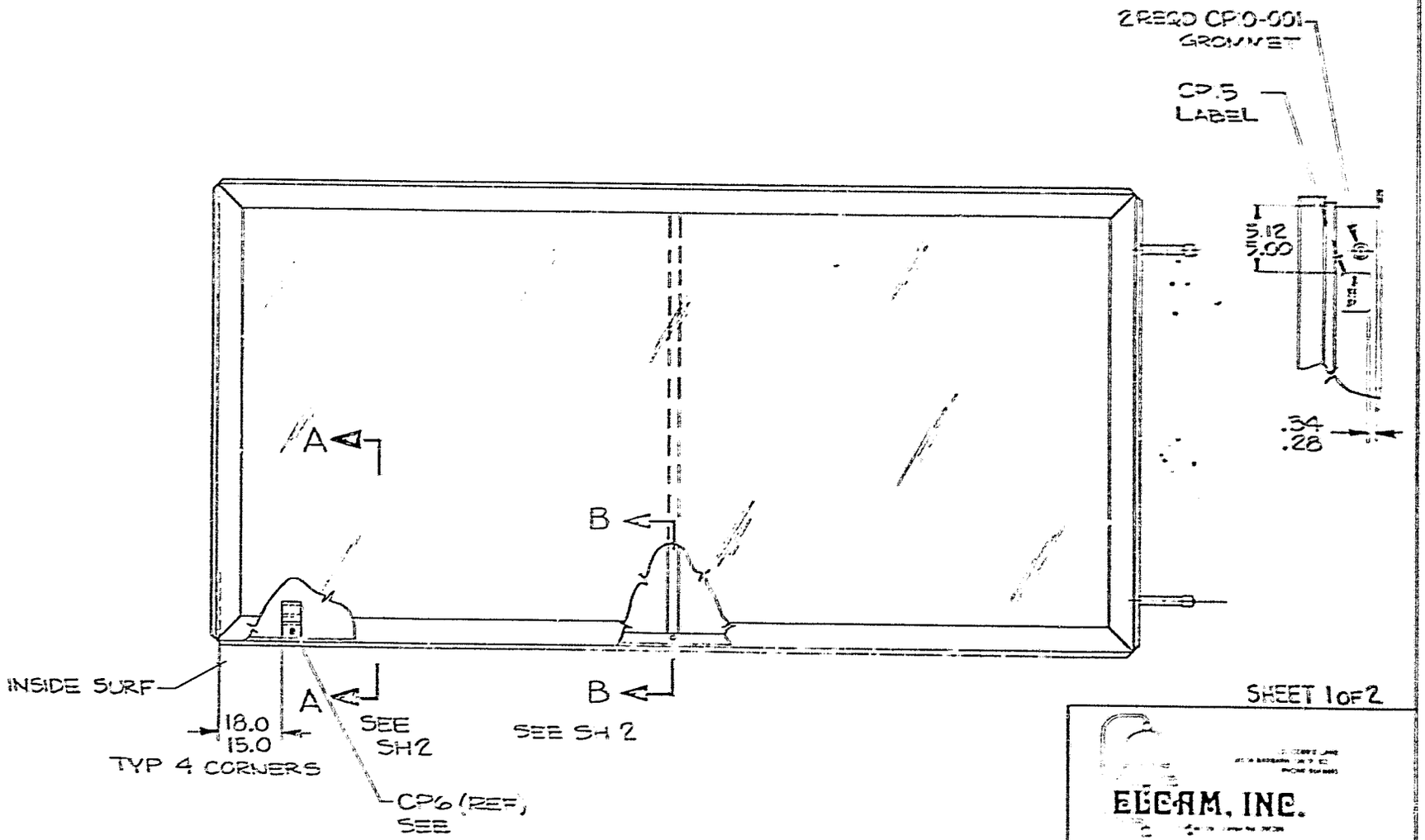

SHEET 1 OF 2

ELCAM, INC.

E1

COLLECTOR ASSY

ESE-1

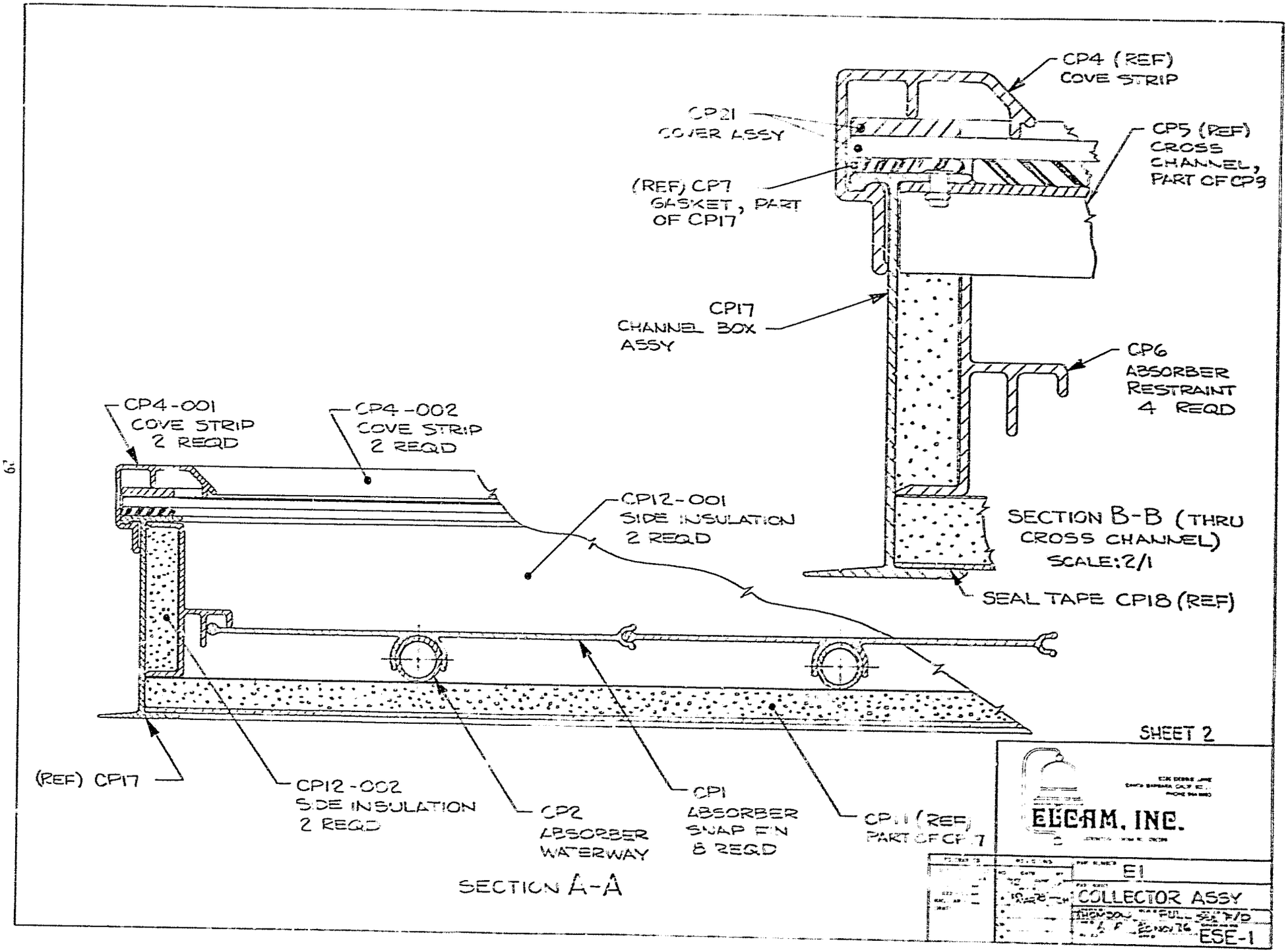
CP4 (REF)
COVE STRIP
CP21
COVER ASSY
CP5 (REF)
CROSS
CHANNEL,
PART OF CP3
(REF) CP7
GASKET, PART
OF CP17
CP17
CHANNEL BOX
ASSY
CP6
ABSORBER
RESTRAINT
4 REQD
SECTION B-B (THRU
CROSS CHANNEL)
SCALE: 2/1
SEAL TAPE CP18 (REF)
CP4-001
COVE STRIP
2 REQD
CP4-002
COVE STRIP
2 REQD
CP12-001
SIDE INSULATION
2 REQD
(REF) CP17
CP12-002
SIDE INSULATION
2 REQD
CP2
ABSORBER
WATERWAY
CP1
ABSORBER
SNAP FIN
8 REQD
CP11 (REF)
PART OF CP17
SECTION A-A
SHEET 2
ELCAM, INC.
E1
COLLECTOR ASSY
FULL SCALE
ESE-1

NOTES:

1. MATERIAL:
   GLASS-LINED TANK
   STORAGE OR HEATER
   MODEL, SEE TABLE I

2. VENDOR:
   A.O. SMITH CORP
   FSCM NO. 28611

3. PART NO. MUST INCLUDE
   THE DASH NO.
   e: E2-001

CODE

A = RELIEF VALVE
    OPENING 3/4 NPT
B = OUTLET 3/4 NPT
C = INLET 3/4 NPT
D = DRAIN VALVE
E = 3/4 FEMALE NPT
F = ELECTRICAL ENTRANCE
    ESH MODELS

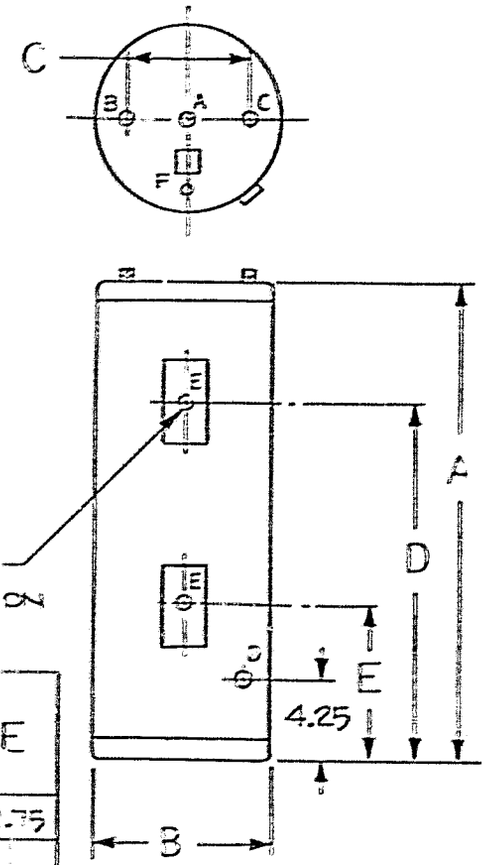

ESH MODELS
ELEMENT LOCATION

TABLE I

SOLAR STORAGE TANK				SOLAR ELECTRIC HEATER					APPROX SHIP WT/ LBS	A	B	C	D	E
PART NO.	MODEL	CAP U.S. GAL		PART NO.	MODEL	CAP U.S. GAL	MAX KW @ 120V	208V/240V 277V/480V						
E2-001	STJ-30	30	(ALL ESH 480V 240V 1PH ELEMENT)	E2-011	ESH-30	30	3	6	111	49.12	20.5	8	31.94	7.75
E2-002	STJ-40	40		E2-012	ESH-40	40	3	6	134	47.88	21.75		31.75	
E2-003	STJ-52	52		E2-013	ESH-52	52	3	6	152	59.38	21.75		41.5	
E2-004	STJ-66	66		E2-014	ESH-66	66	3	6	196	63.88	24		45.75	
E2-005	STJ-80	80		E2-015	ESH-80	80	3	6	228	62.88	25.25		46.75	
E2-006	STJ-120	120		E2-016	ESH-120	120	3	6	355	62.12	29.38	16	46.75	

ELCAM, INC.

E2

STORAGE AND SOLAR HEATER TANK

ESE-2

NOTES:

1. MATERIAL:
   GLASS-LINED
   WATER HEATER
   MODEL, SEE TABLE I

2. VENDOR:
   AO SMITH CORP
   FSCM NO. 28611

NO. OF ELEMENTS = 2
MAX KW @ 240V = 12

DOUBLE ELEMENT=
4500W/4500W

TABLE I

SPECS	-001	-002
MODEL	PEC-52	PEC-40
CAP IN GALS	52	40
SHIP WT/LBS	148	188
DIM A	20.5	24.0
DIM B	58.25	61.75

CODE

A = RELIEF VALVE OPENING 3/4 NPT
B = OUTLET 3/4 NPT
C = INLET 3/4 NPT
D = DRAIN VALVE

NOTE: PART NO. MUST INCL DASH NO.
ie: E3-001

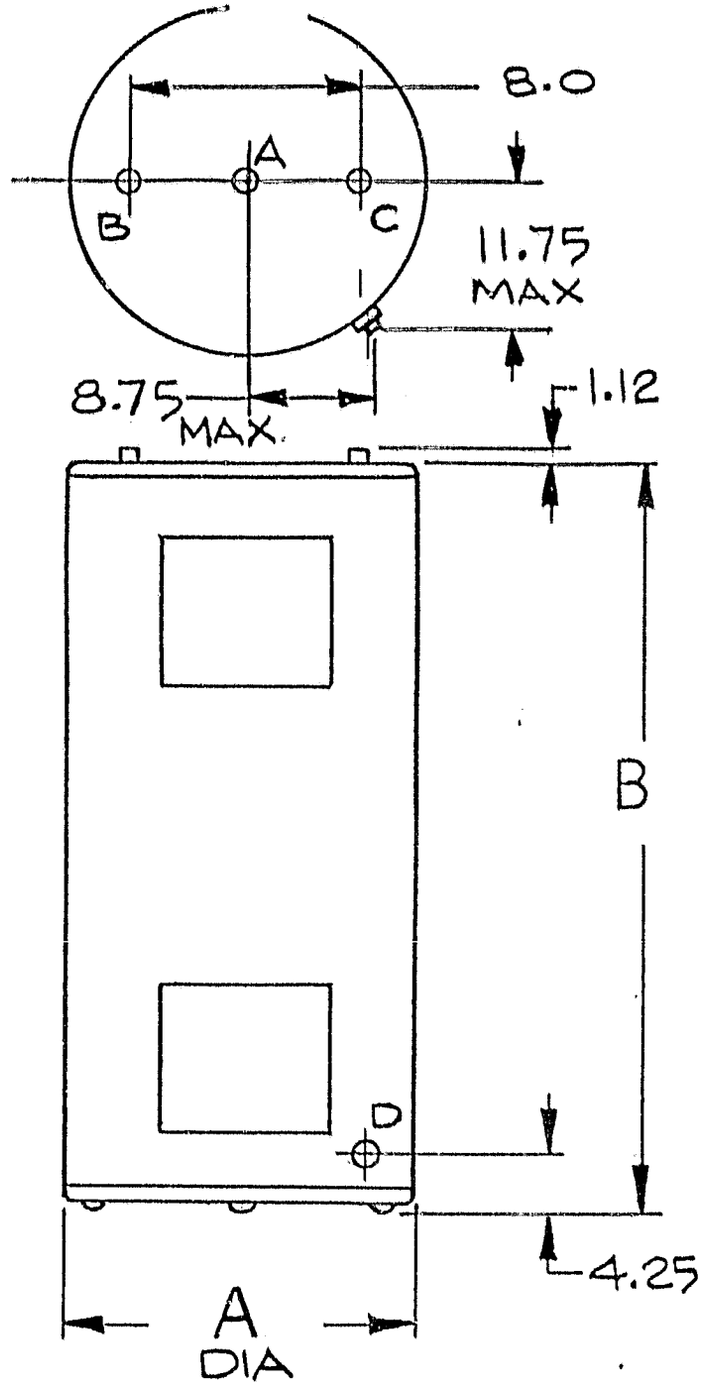

5330 DEBBIE LANE
SANTA BARBARA, CALIF 93111
964-8676

ELCAM, INC.

Contractors License No 290399

TOLERANCES	REVISIONS			PART NUMBER		
UNLESS OTHERWISE SPECIFIED DECIMAL .XX ± 0.0 — .XXX ± 0.0 — ANGULAR ± DRAFT VENDOR'S TOL APPLY	NO	DATE	BY	E3		
				PART NAME ELECTRIC TANK		
				DRAWN BY THOMSON	SCALE NONE	MATERIAL SEE NOTE 1
				CHK'D	DATE 23 NOV 76	DRAWING NO ESE-3
				TRACED	APP'D	

NOTES:

1. MATERIAL:
   GENERAL PURPOSE
   WATER VALVE, MOTOR DRIVEN
   MODEL 7618

2. VENDOR:
   BARBER-COLMAN CO.
   FSCM NO. 05624

3. SPECIFICATIONS:
   FOR 40°F TO 120°F WATER
   125°F MAX AMBIENT
   MOTOR 24VAC 60 HZ
   5W 6RPM
   MAX DIFFERENTIAL PRESS 10PSI
   MAX STATIC PRESSURE 125PSI

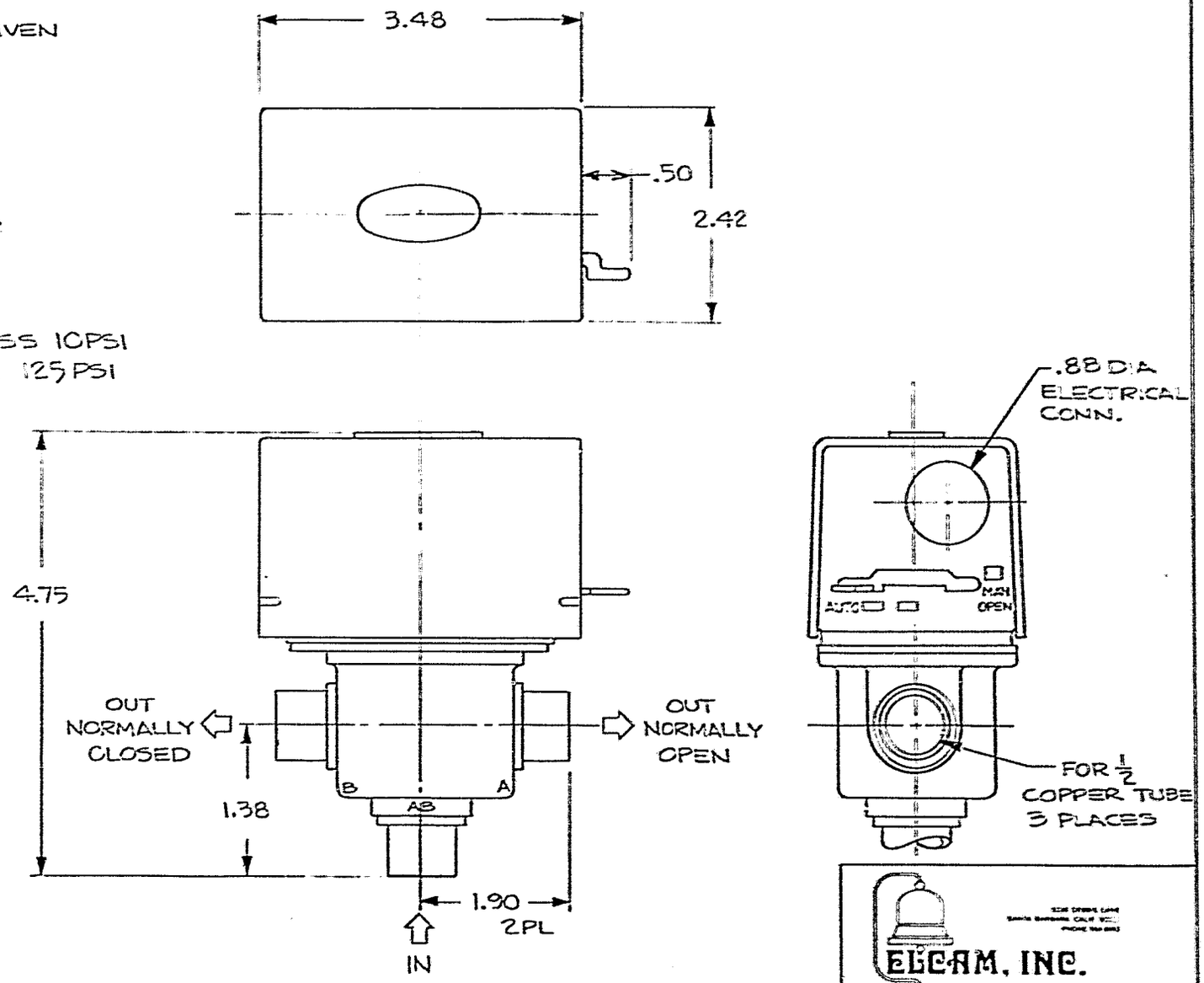

ELCAM, INC.

TOLERANCES	REVISIONS	E9
		CASCADE VALVE
VENDOR'S		FULL SCALE!
TOL APPLY		22 NOV 76 ESE-9

NOTES:

1. MATERIAL:
   ALUMINUM ALLOY EXTRUSION
   CMPSN 6063 TEMPER T5
   DIE SECTION 66890

2. VENDOR:
   REYNOLDS METALS CO.
   FSCM NO.

3. PROTECTIVE FINISH:
   CHEM FILM (ALODINE) ENTIRE
   PART, FINISH COAT WITH MARTIN NO.23
   (LUSTERLESS BLACK) ON
   INDICATED AREA.

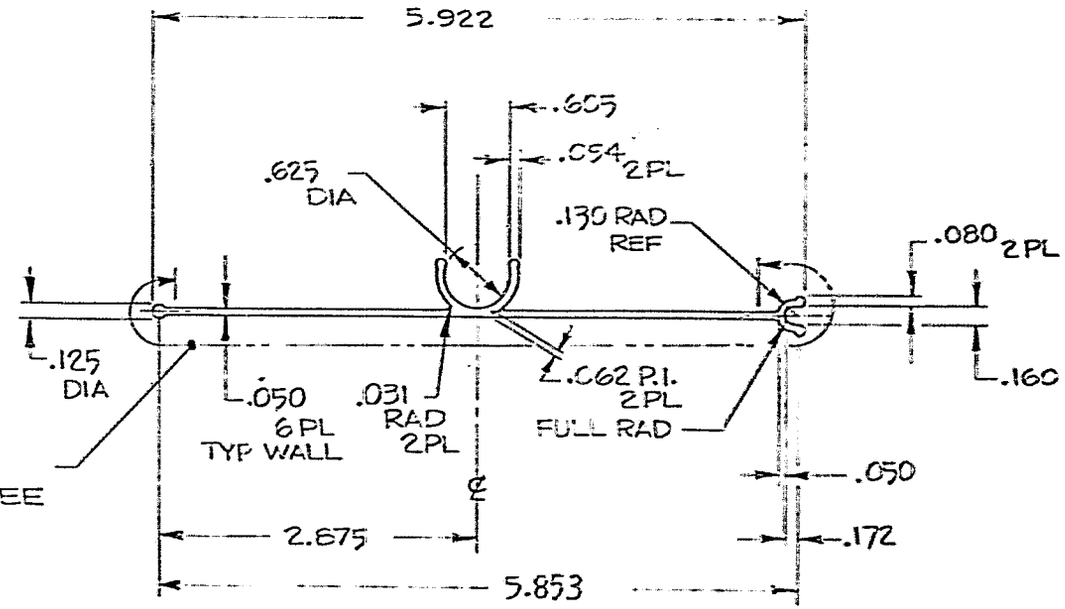

ELCAM, INC.

CP1

ASSCREER SNAP FIT

ESP-C1

NOTES:

1. MATERIAL:
   COPPER TUBE, ROUND SEAMLESS, HARD DRAWN, TYPE M - OPTION ALLOY 330.

2. ALL SEAMS SHALL BE BRAZED USING "UNIBRAZE" 45% SILVER ALLOY.

3. PD15 FITTINGS ARE FROM:
   PHELPS - DODGE TUBE CO.
   FSCM NO. 05722
   OR EQUIV.

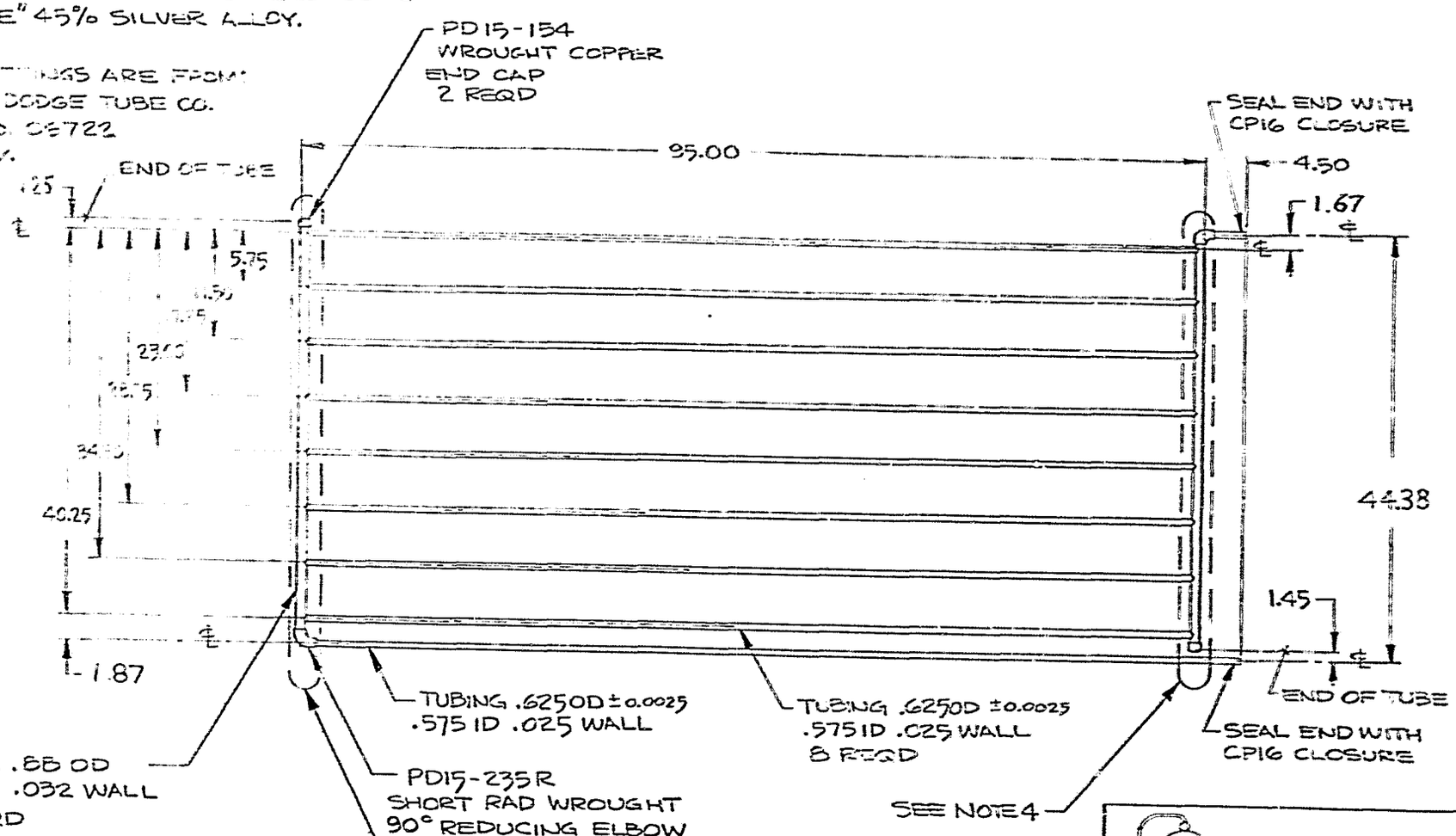

NOTES CONTINUED:

4. AFTER FABRICATION & TESTING TREAT INDICATED AREAS PER ENGINEERING SPEC

ELCAM, INC.

CP2

ABSORBER WATERWAY

ESP-C2

NOTES:

1. MATERIAL:
   ALUMINUM ALLOY EXTRUSION
   OMPSN 6063 TEMPER T5
   DE SECTION 67026-A

2. VENDOR:
   REYNOLDS METALS CO.
   FSCM NO.

3. PROTECTIVE FINISH:
   ELECTRO-DEPOSITED
   COMMERCIAL DARK
   BROWN

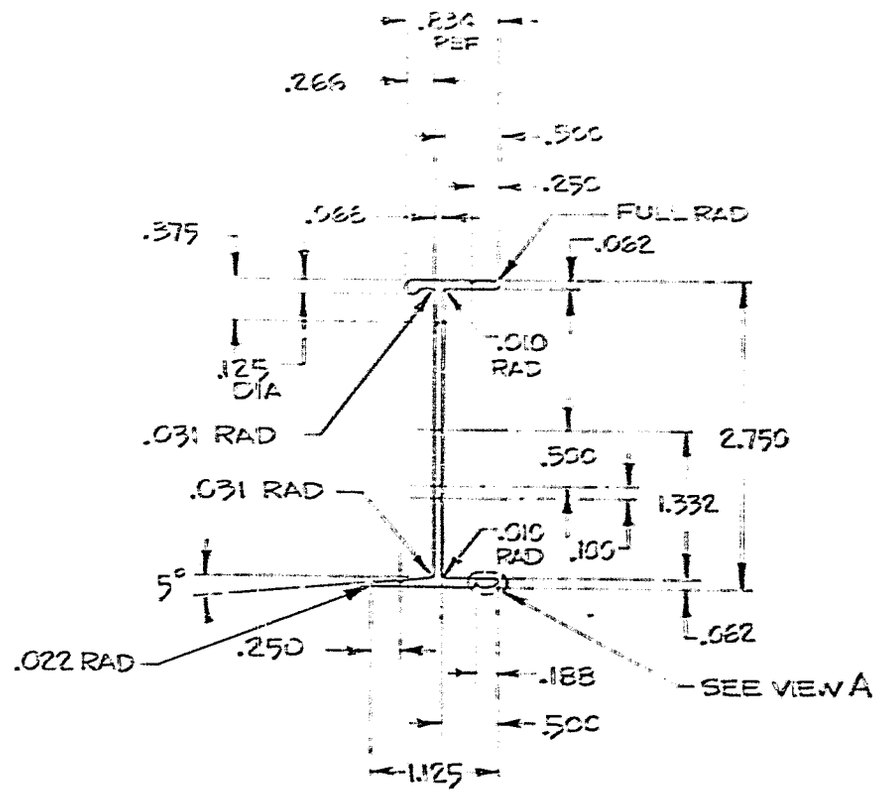

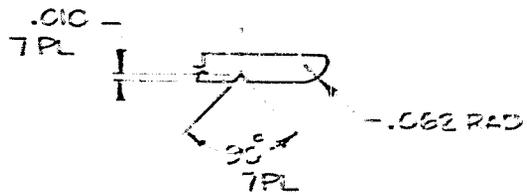

VIEW A
SCALE: 4/1

ELCAM, INC.

CP3

SIDE CHANNEL

FULL SCALE

ESP-C3

NOTES:

1. MATERIAL:
   ALUMINUM ALLOY EXTRUSION
   CMPSN 6063 TEMPER T6
   DIE SECTION NO. 67025

2. VENDOR:
   REYNOLDS METALS CO.
   FSCM NO.

3. PROTECTIVE FINISH:
   ELECTRO-DEPOSITED
   COMMERCIAL DARK
   BROWN

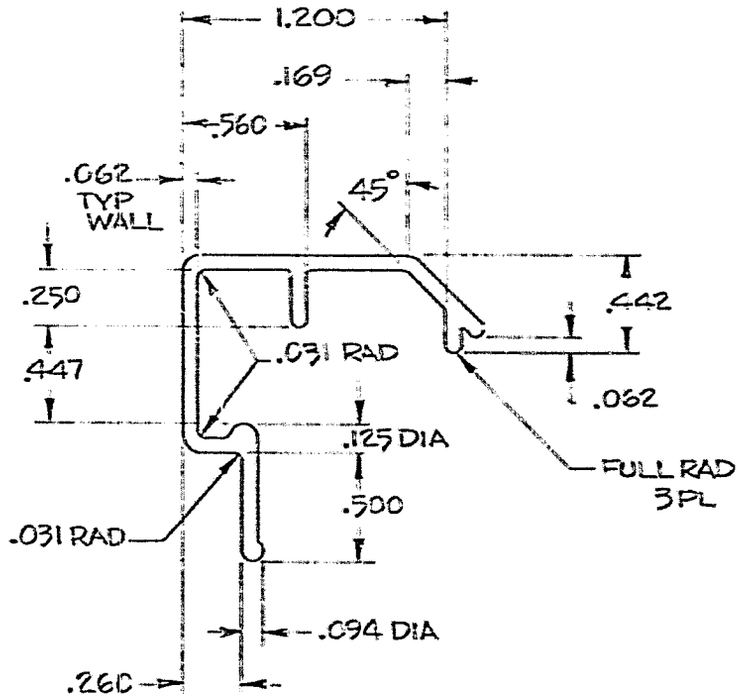

ELCAM, INC.

PART NUMBER	CP4
PART NAME	COVE STRIP
SCALE	2/1
	ESP-04

NOTES:

1. MATERIAL:
   ALUMINUM ALLOY EXTRUSION
   CMPSN 6063 TEMPER T52
   DIE SECTION NO. 8997 (ALCOA)

2. VENDOR:
   DUCOMMUN METALS & SUPPLY
   FSCM NO. 18708

3. PROTECTIVE FINISH:
   ELECTRO-DEPOSITED
   COMMERCIAL DARK
   BRONZE.

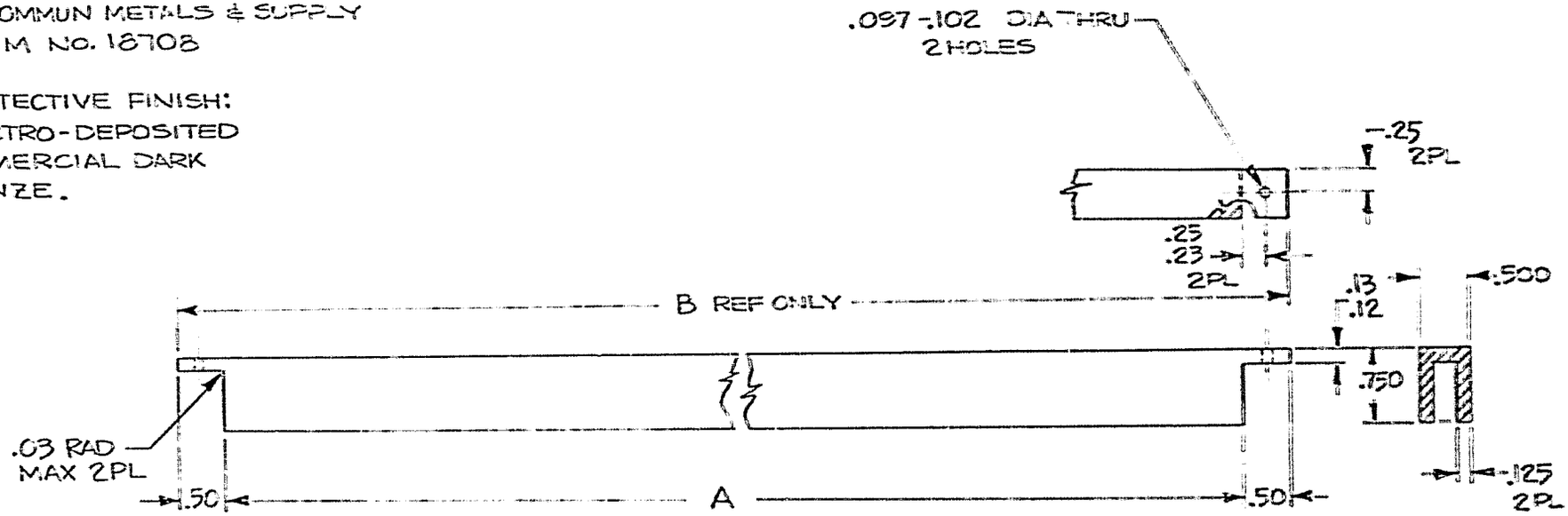

TABLE I

PART NO.	NOTCHED LENGTH A	CUT LENGTH B REF	REMARKS
CP5-001	46.79	47.76	

ELCAM, INC.

CP5

CROSS CHANNEL

ESP-05

NOTES:

1. MATERIAL:
   ALUMINUM ALLY EXTRUSION
   CMPSN 6063 TEMPER T5
   DIE SECTION NO. 67106

2. VENDOR:
   REYNOLDS METALS CO.
   FSCM NO. 09983

3. PROTECTIVE FINISH:
   NONE

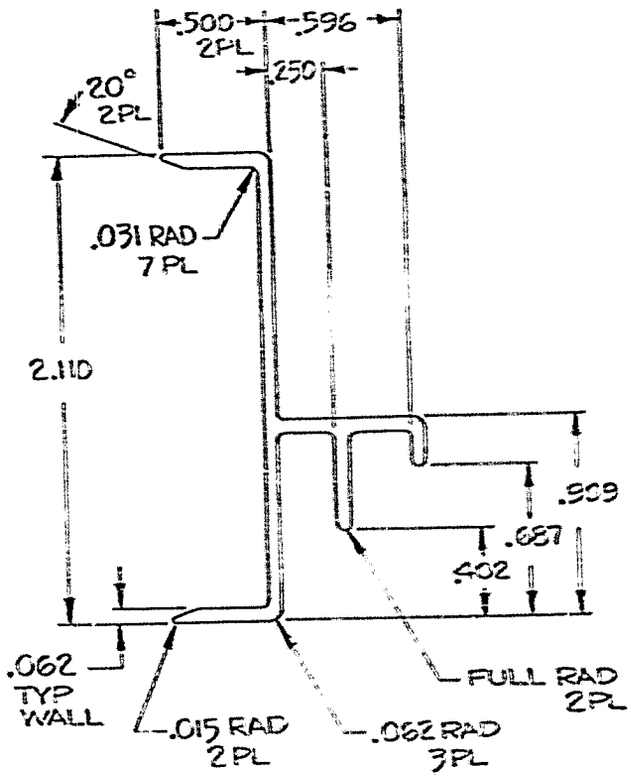

TABLE I

PART NO.	REMARKS
CP6 -001	CUT INTO .80-.86 LENGTHS
CP6 -002	LENGTH AS MILL SUPPLIED

ELCAM, INC.

CP6

ABSORBER RESTRAINT

2/1

HOR

ESP-06

NOTES:

1. MATERIAL:
   VYNIL RUBBER STRIP.
   CLOSED CELL SPONGE
   DUROMETER 40-50
   COLOR BLACK. PRESSURE-SENSITIVE
   ADHESIVE BACKED WITH
   PROTECTIVE BACKING PAPER.

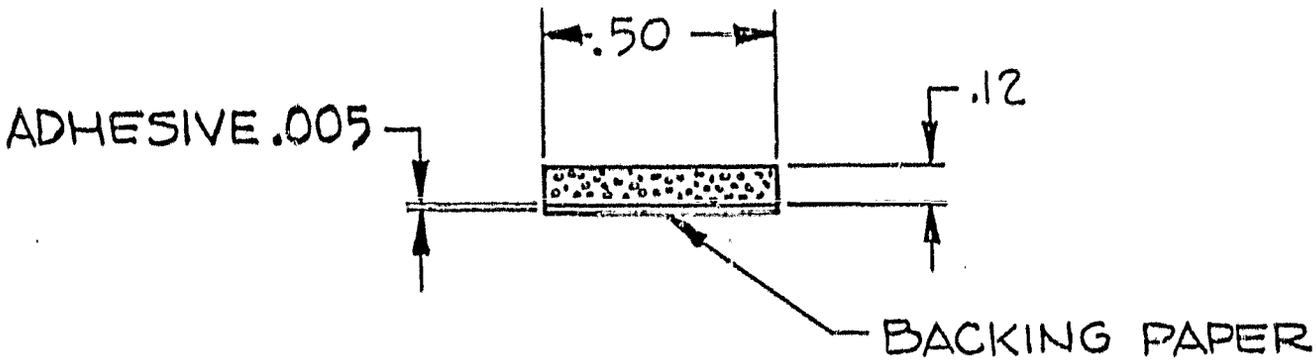

5330 DEBBIE LANE
SANTA BARBARA, CALIF. 93111
PHONE 964 8693

ELCAM, INC.

Contractors License No. 290399

TOLERANCES	REVISIONS				
UNLESS OTHERWISE SPECIFIED DECIMAL .XX ± 0.0 3 .XXX ± 0.0 ANGULAR ± DRAFT	NO	DATE	BY	PART NUMBER CP7	
	1			PART NAME GASKET	
	2				
	3			DRAWN BY THOMSON	SCALE NONE	MATERIAL SEE NOTE 1
	4			CHK'D HJR	DATE 14 NOV 76	DRAWING NO ESP-C7
	5			TRACED	APP'D	

NOTES:

1. MATERIAL:
   ACRYLIC FORTIFIED POLYESTER RESIN REINFORCED WITH FIBERGLASS. PROTECTED WITH 1 MIL COATING OF DUPONT'S TEDLAR POLYVINYL FLUORIDE ONE SURFACE.
   COLOR - CRYSTAL CLEAR

2. VENDOR:
   GLASTEEL INC.
   1727 BUENA VISTA
   DUARTE, CALIF. 91010

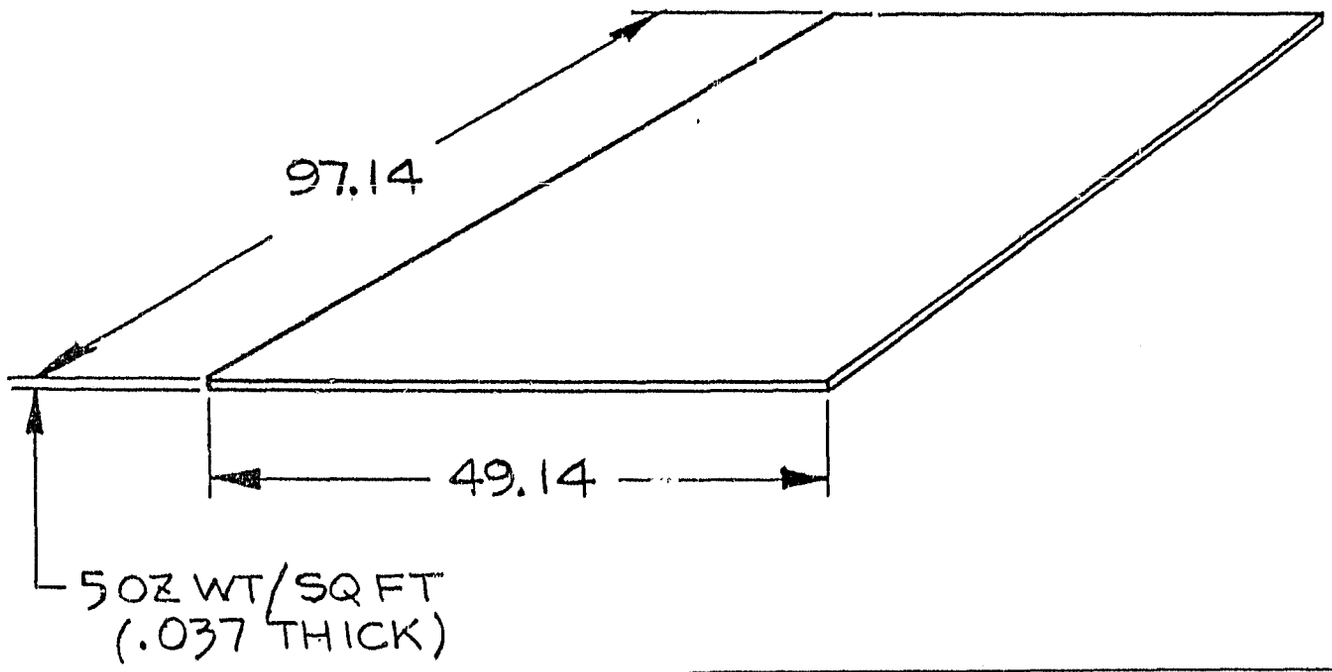

5330 DEBBIE LANE
SANTA BARBARA, CALIF. 93111
PHONE 964 8693

ELCAM, INC.

Contractors License No. 290399

TOLERANCES	REVISIONS					
UNLESS OTHERWISE SPECIFIED DECIMAL .XX ± 0.0 2 .XXX ± 0.0 — ANGULAR ± DRAFT	NO	DATE	BY	PART NUMBER CP8		
	1			PART NAME FIBERGLASS COVER		
	2					
	3			DRAWN BY THOMSON	SCALE NONE	MATERIAL SEE NOTE 1
	4			CHK'D KUR	DATE 19 NOV 76	DRAWING NO ESP-C8
	5			TRACED	APP'D	

NOTES:

1. RIVET SECURELY USING MFRS TOOLS & PROCEDURES. DOME RIVET HEADS MUST BE ON ONE SIDE.
2. CORNERS MUST BE FREE FROM BURRS AND SHARP EDGES.
3. FRAME MEMBERS ARE MADE FROM AL ALLOY 2024-T4 RECTANGLE BARS .125 x .75 COLD FINISHED & ROLLED.
4. LOWER LONG FRAME MUST HAVE 2 NOTCHES .30-.32 WIDE / .38-.40 DEEP CENTERED ON 47.90 DIM.

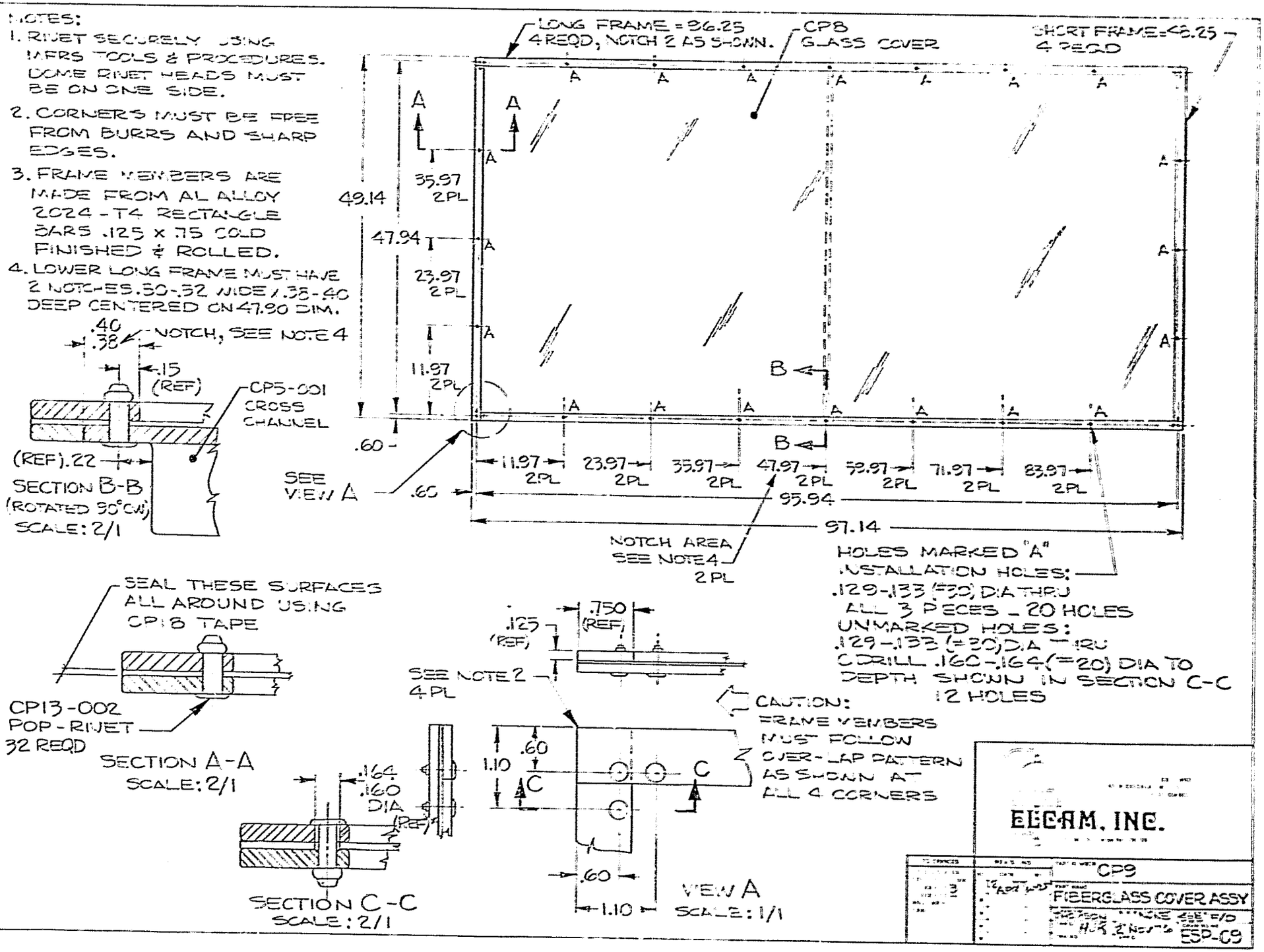

NOTES:

1. MATERIAL:
   RUBBER, SYNTHETIC
   COLOR BLACK, DURO 55

2. VENDOR(S)
   RUBBERCRAFT CORP
   FSCM NO. 77969

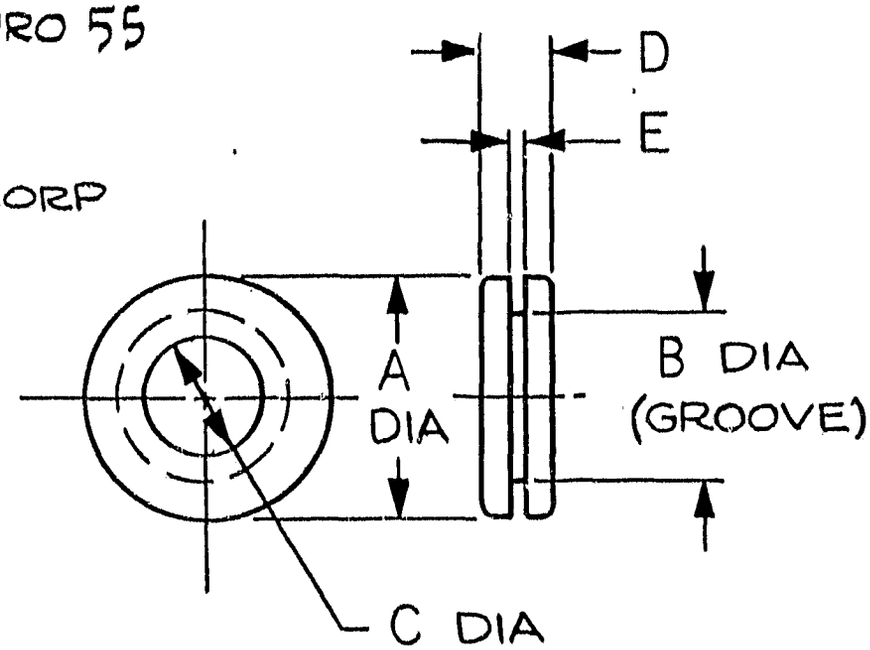

TABLE I

PART NO.	A	B	C	D	E	VENDOR PART NO. RBRCRAFT	
CP10-001	1.12	.875	.625	.32	.062	No. 22	
CP10-002	.44	.312	.125	.22	.062	No. 59	

5330 DEBBIE LANE
SANTA BARBARA, CALIF. 93111
964-8676

ELCAM, INC.

Contractors License No. 290399

TOLERANCES	REVISIONS			PART NUMBER CP10		
UNLESS OTHERWISE SPECIFIED DECIMAL .XX ± 0.03 .XXX ± 0.015 ANGULAR ± — DRAFT	NO	DATE	BY	PART NAME RUBBER GROMMET		
	1					
	2					
	3			DRAWN BY THOMSON	SCALE NONE	MATERIAL SEE NOTE 1
	4			CHK'D HJR	DATE 19 NOV 76	DRAWING NO ESP-C10
	5			TRACED	APP'D	

NOTES:

1. MATERIAL:

INSULATION BOARD, RIGID CELLULAR PLASTIC CORE, LAMINATED CONSTRUCTION WITH ALUM ALLOY FOIL BOTH SIDES (CELOTEX CORP) ALUM SHEET ON ONE SIDE BY ELCAM, INC.

2. VENDOR:

THE CELOTEX CORP.
FSCM NO. 86105
PART NO. TF-400

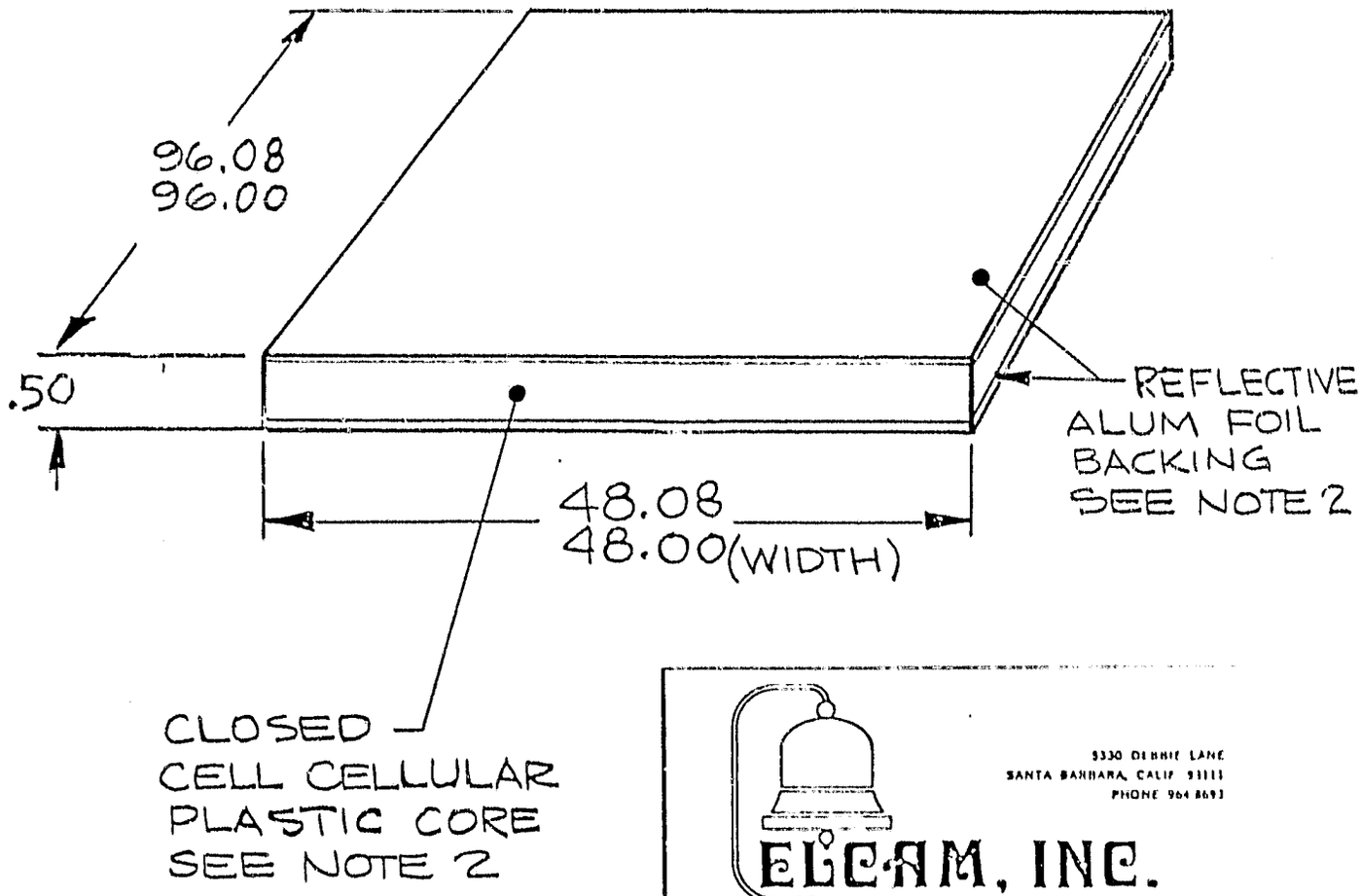

5330 DEBRIE LANE
SANTA BARBARA, CALIF 93111
PHONE 964 8693

ELCAM, INC.

Contractors License No 290399

TOLERANCES	REVISIONS			PART NUMBER CP11
UNLESS OTHERWISE SPECIFIED DECIMAL .XX ± 0.02 .XXX ± 0.004 ANGULAR ± — DRAFT	NO	DATE	BY	PART NAME REAR INSULATION
				DRAWN BY THOMSON · SCALE NONE · MATERIAL SEE NOTE 1
				CHK'D HJR · DATE 18 NOV 76 · DRAWING NO ESP-C11
				TRACED · APP'D

NOTES:

1. MATERIAL:
   INSULATION BOARD, RIGID CELLULAR PLASTIC CORE.
   SINGLE FACE CONSTRUCTION.
   ALUM FOIL BOTH SIDES.

2. VENDOR:
   THE CELOTEX CORP.
   FSCM NO. 86105
   PART NO. TF-400

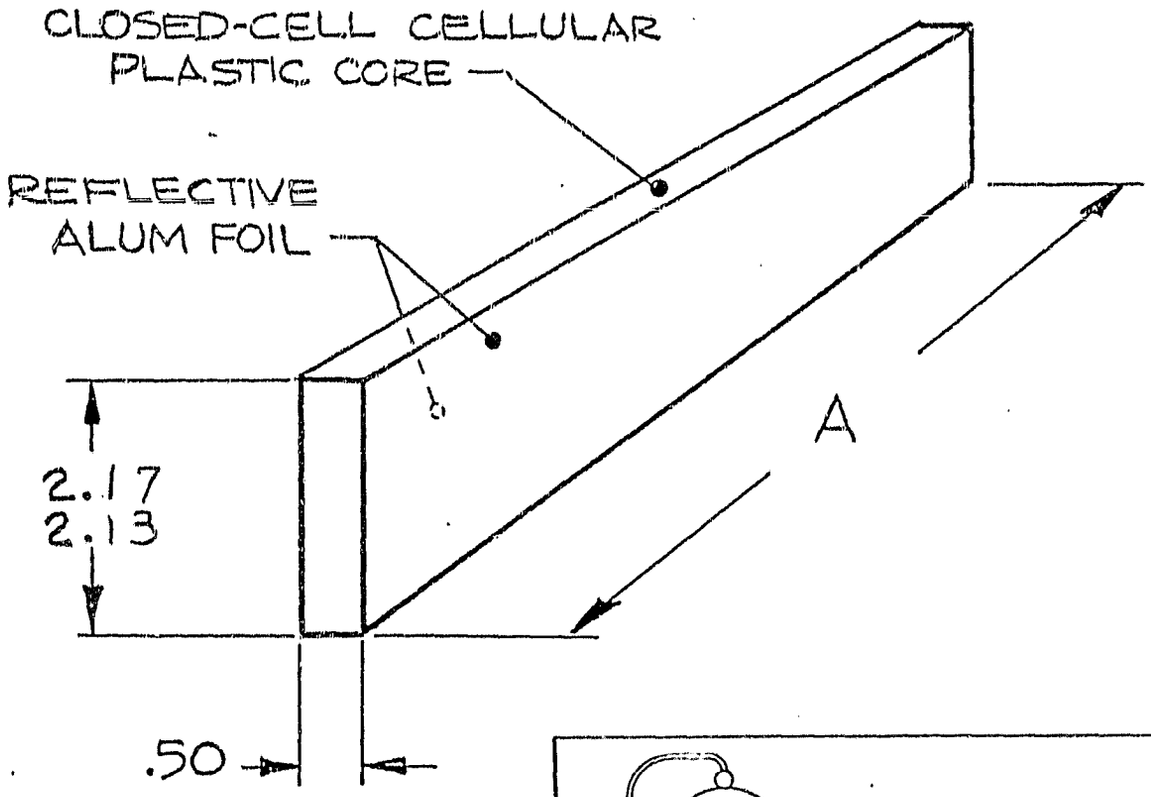

TABLE I

PART NO.	A
CP12-001	96.60
CP12-002	47.13

5330 DEBBIE LANE
SANTA BARBARA, CALIF. 93111
PHONE 964 4693

ELCAM, INC.

Contractors License No. 290399

TOLERANCES	REVISIONS			PART NUMBER		
UNLESS OTHERWISE SPECIFIED DECIMAL .XX ± 0.03 .XXX ± 0.0 — ANGULAR ± DRAFT	NO	DATE	BY	CP12		
	1			PART NAME SIDE INSULATION		
	2					
	3			DRAWN BY THOMSON	SCALE NOTE	MATERIAL SEE NOTE 1
	4			CHK'D H.R.	DATE 18 NOV 76	DRAWING NO ESP-C12
	5			TRACED	APP'D	

NOTES:

1. MATERIAL:
   ALUMINUM ALLOY BLIND RIVET, SEE VENDOR SPEC.
2. VENDOR:
   USM CORP, "POP" RIVET DIV
   FSCM No. 07707

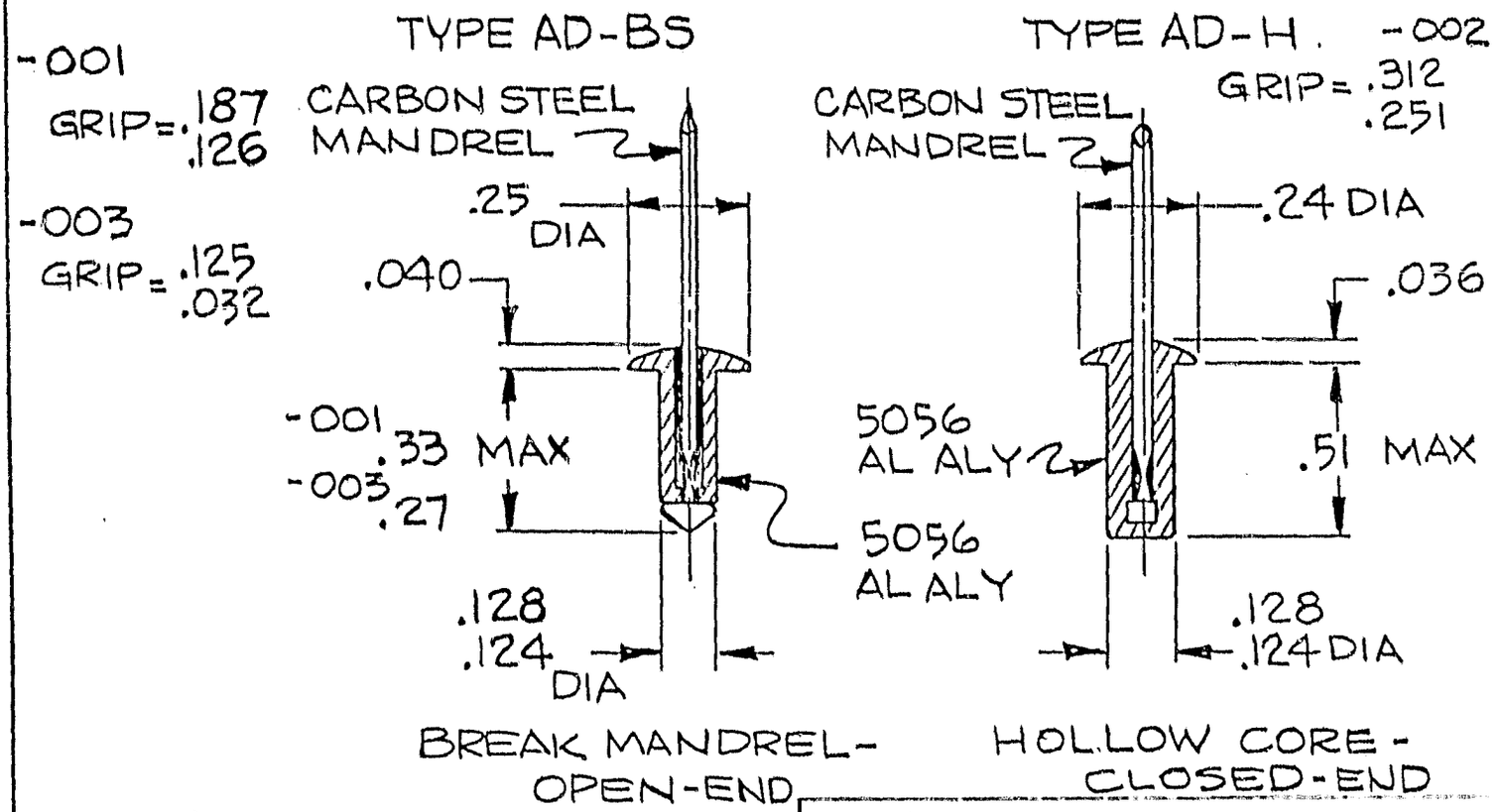

TABLE I

PART No.	VENDOR PART NO.
CP13-001	AD43BS
CP13-002	AD45H.
CP13-003	AD42BS

5330 DEBBIE LANE
SANTA BARBARA, CALIF. 93111
PHONE 964 8693
ELCAM, INC.
Contractors License No. 290399

TOLERANCES	REVISIONS			PART NUMBER		
UNLESS OTHERWISE SPECIFIED DECIMAL .XX ± .00 .XXX ± .00 ANGULAR ± DRAFT VENDOR'S STD TOL APPLY	NO	DATE	BY	CP13		
				PART NAME POP RIVET		
				DRAWN BY THOMSON	SCALE NONE	MATERIAL SEE NOTE 1
				CHK'D H.J.R.	DATE 14 NOV 76	DRAWING NO ESP-C13
				TRACED	APP'D	

NOTES:

1. MATERIAL:
   CARBON STEEL

2. PROTECTIVE FINISH:
   ZINC PLATE

3. MFG PART NO.
   STANLEY NO. 999

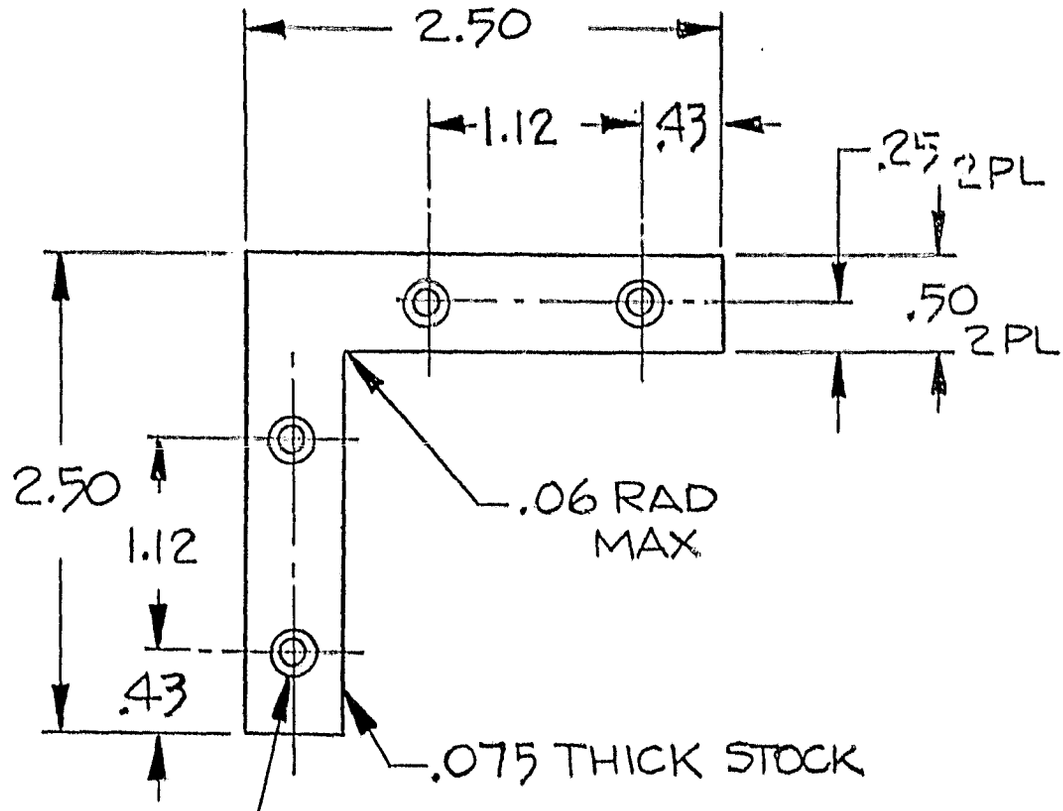

.198-.204 DIA
CSK 120° TO .25 DIA
4 HOLES

5330 DEBBIE LANE
SANTA BARBARA, CALIF 93111
PHONE 964 8693

ELCAM, INC.

Contractors License No 290399

TOLERANCES	REVISIONS			PART NUMBER CP14
UNLESS OTHERWISE SPECIFIED DECIMAL XX ± .02 XXX ± .00 ANGULAR ± 3° DRAFT	NO	DATE	BY	PART NAME CORNER BRACKET
	1			DRAWN BY THOMSON · SCALE FULL · MATERIAL SEE NOTE 1
	2			CHK'D HJR · DATE 14 NOV 76 · DRAWING NO ESP-C14
	3			TRACED · APP'D
	4			
	5			

NOTES:

1. MATERIAL:
   PHOTOGRAPHIC PAPER.
   PRESSURE-SENSITIVE
   ADHESIVE BACKED WITH
   PROTECTIVE BACKING
   PAPER.

ORIGINAL PAGE IS
OF POOR QUALITY

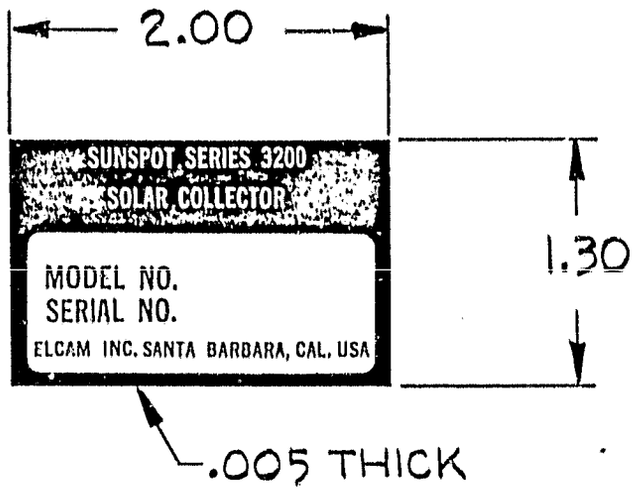

5330 DEBRIE LANE
SANTA BARBARA, CALIF. 93111
PHONE 964 8693

ELCAM, INC.

Contractors License No. 290399

TOLERANCES	REVISIONS			PART NUMBER CP15		
UNLESS OTHERWISE SPECIFIED DECIMAL .XX ± .003 .XXX ± .00 ANGULAR ± DRAFT	NO	DATE	BY	PART NAME LABEL, COLLECTOR		
	1					
	2					
	3					
	4					
	5					
				DRAWN BY THOMSON	SCALE FULL	MATERIAL SEE NOTE 1
				CHK'D LUR	DATE 14 NOV 76	DRAWING NO ESP-C15
				TRACED	APP'D	

NOTES:

1. MATERIAL:
   VINYL PLASTIC
   COLOR RED
2. VENDOR:
   SINCLAIR & RUSH INC.
   FSCM NO
   PART NO. 625-8

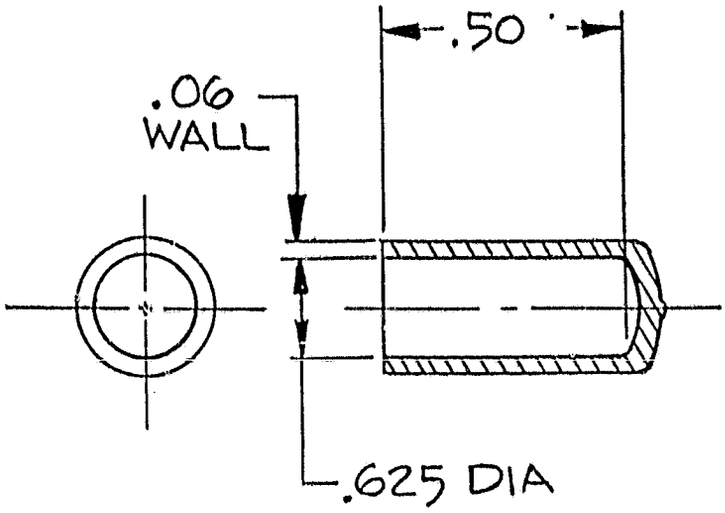

5330 DEBBIE LANE
SANTA BARBARA, CALIF. 93111
PHONE 964 8693

ELCAM, INC.

Contractors License No. 290399

TOLERANCES	REVISIONS			PART NUMBER CP16
UNLESS OTHERWISE SPECIFIED DECIMAL .XX ± 0.02 .XXX ± 0.0 ANGULAR ± DRAFT	NO	DATE	BY	PART NAME VINYL CLOSURE
	1			
	2			
	3			DRAWN BY THOMSON · SCALE NONE · MATERIAL SEE NOTE 1
	4			CHK'D · DATE · DRAWING NO ESP-C16
	5			TRACED · APP'D

NOTES:

1. [illegible] ASSEMBLY USING MFRS TOOLS AND [illegible] FIGURES. DOME RIVET HEADS MUST BE ON SIDES SHOWN IN SECTION A-A.

2. CORNERS MUST BE FREE FROM BURRS AND SHARP EDGES.

3. AFTER FINAL [illegible]ATION & TOUCH-UP BOND CP[illegible] GASKET TO SURFACE SHOWN.

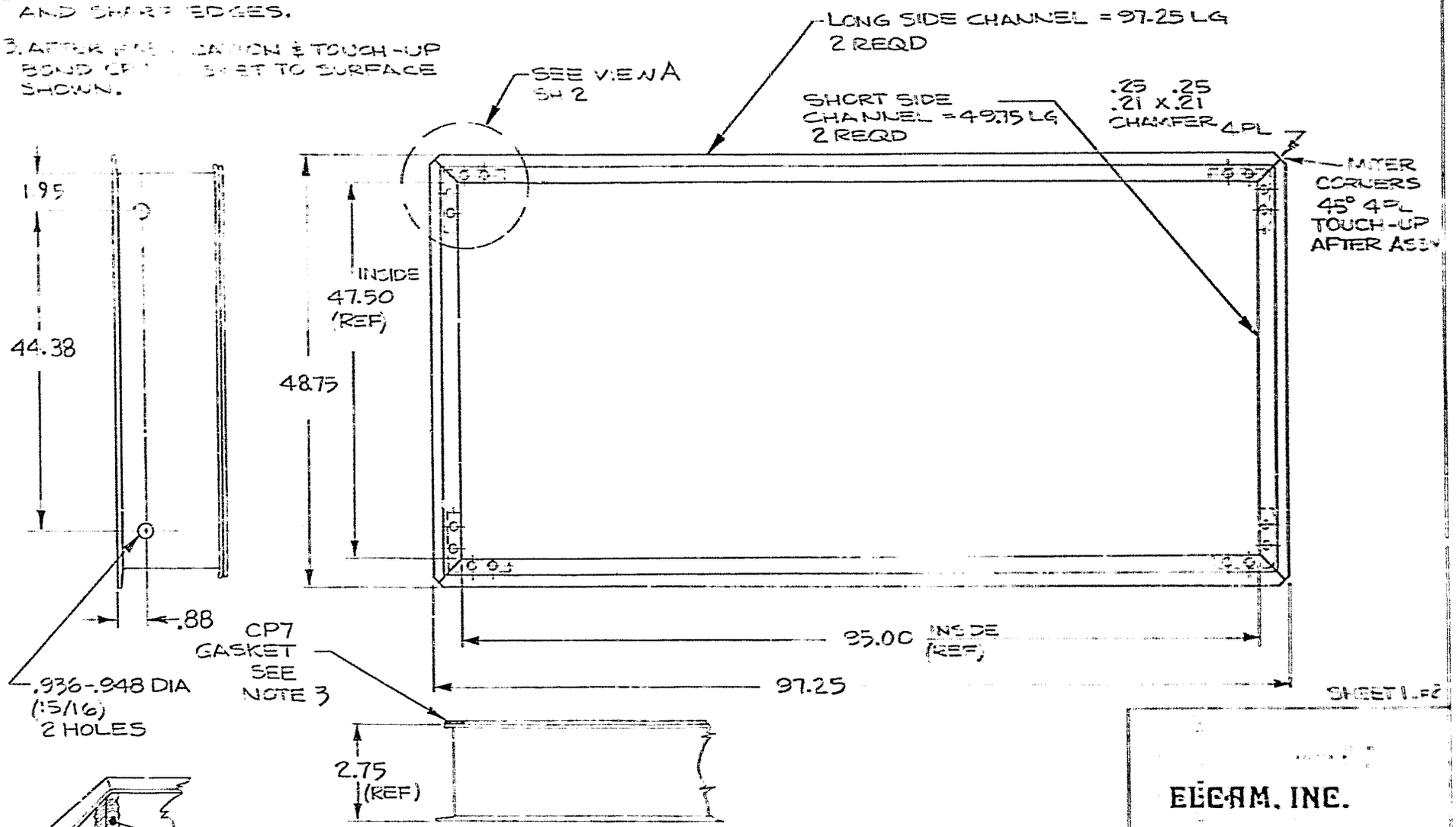

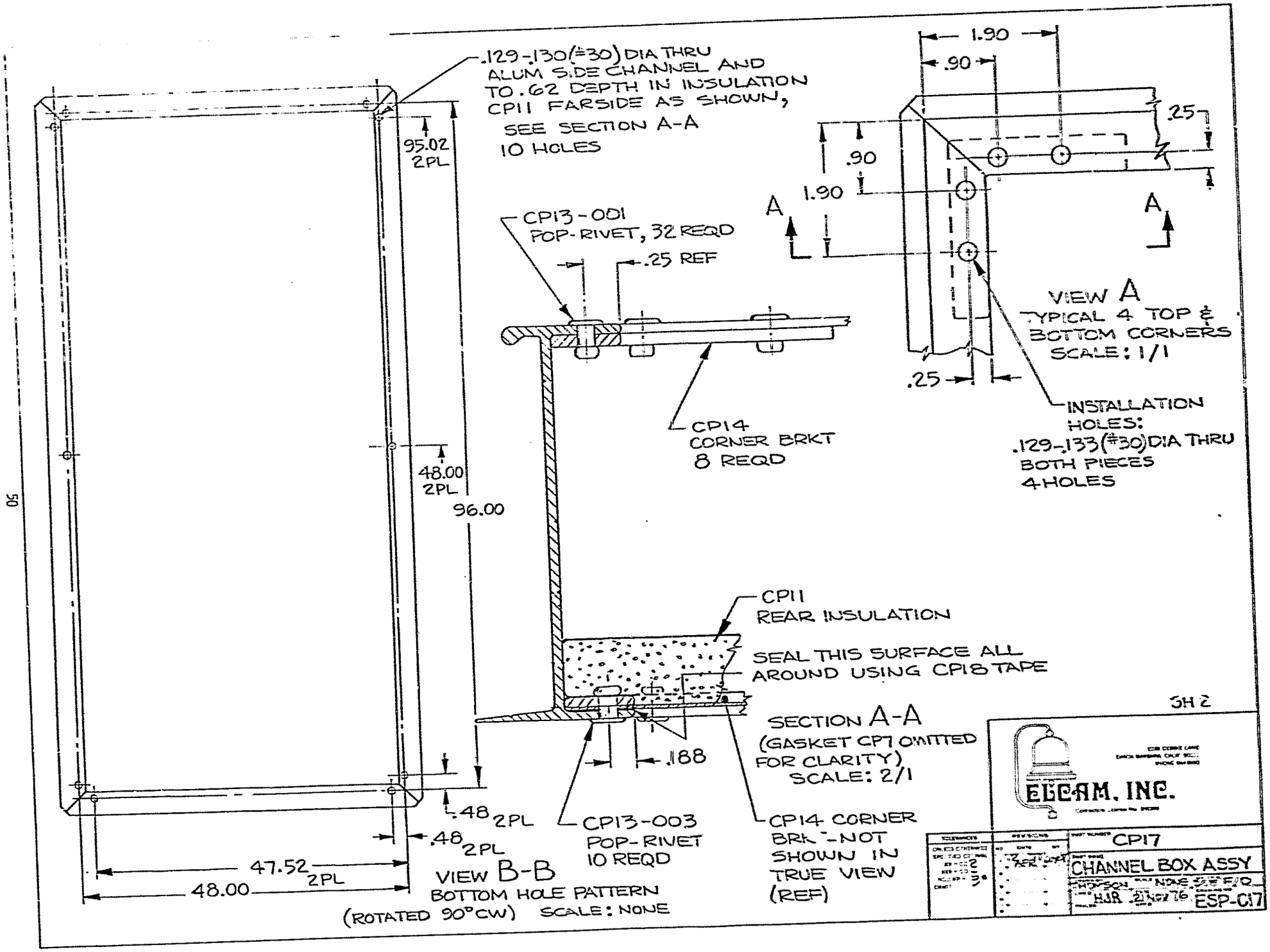
.129-.130(#30) DIA THRU
ALUM SIDE CHANNEL AND
TO .62 DEPTH IN INSULATION
CP11 FARSIDE AS SHOWN,
SEE SECTION A-A
10 HOLES
95.02
2PL
48.00
2PL
96.00
.48 2PL
.48 2PL
47.52
2PL
48.00
VIEW B-B
BOTTOM HOLE PATTERN
(ROTATED 90°CW) SCALE: NONE
CP13-001
POP-RIVET, 32 REQD
.25 REF
CP14
CORNER BRKT
8 REQD
CP11
REAR INSULATION
SEAL THIS SURFACE ALL
AROUND USING CP18 TAPE
.188
SECTION A-A
(GASKET CP7 OMITTED
FOR CLARITY)
SCALE: 2/1
CP13-003
POP-RIVET
10 REQD
CP14 CORNER
BRKT-NOT
SHOWN IN
TRUE VIEW
(REF)
1.90
.90
.25
.90
1.90
A
A
.25
VIEW A
TYPICAL 4 TOP &
BOTTOM CORNERS
SCALE: 1/1
INSTALLATION
HOLES:
.129-.133(#30) DIA THRU
BOTH PIECES
4 HOLES
SH 2
ELCAM, INC.
CP17
CHANNEL BOX ASSY
NONE
HJR 21 Nov 76
ESP-C17

NOTES:

1. MATERIAL:
   ALUMINUM ALLOY SHEET
   CMPSN 6061 TEMPER T6

2. VENDOR:
   REYNOLDS METALS CO.
   FSCM NO. 09983

3. PROTECTIVE FINISH:
   NONE

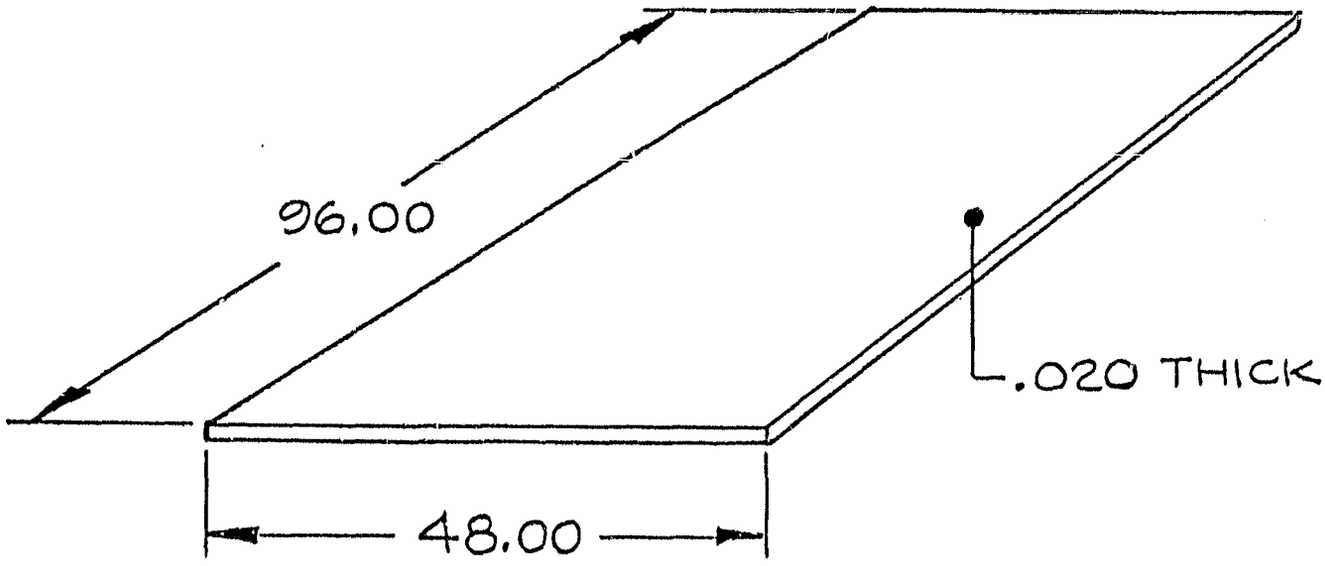

5330 DEBBIE LANE
SANTA BARBARA, CALIF 93111
964-8676

ELCAM, INC.

Contractors License No 290399

TOLERANCES	REVISIONS			PART NUMBER	
UNLESS OTHERWISE SPECIFIED DECIMAL XX ± 0.0 XXX ± 0.0 ANGULAR ±	NO	DATE	BY	CP 18	
				PART NAME BACKING SHEET	
DRAFT VENDOR'S STD TOL APPLY				DRAWN BY THOMSON / CHK'D / TRACED	SCALE NONE / DATE 12 APR 77 / APP'D
					MATERIAL SEE NOTE 1 / DRAWING NO ESP-C18

NOTES:

1. MATERIAL:
   ADHESIVE SEALANT
   SILASTIC RTV 732
   COLOR, CLEAR

2. VENDOR:
   DOW-CORNING CORP
   FSCM NO. 71984

5330 DEBBIE LANE
SANTA BARBARA, CALIF. 93111
964-8676

ELCAM, INC.

Contractors License No 290399

TOLERANCES	REVISIONS					
UNLESS OTHERWISE SPECIFIED DECIMAL XX ± 0.0 — .XXX ± 0.0 — ANGULAR ± DRAFT	NO	DATE	BY	PART NUMBER CP19		
	1			PART NAME SEALANT		
	2					
	3			DRAWN BY THOMSON	SCALE NONE	MATERIAL ~~SEE~~ NOTE 1
	4			CHK'D HJR	DATE 22 NOV 76	DRAWING NO ESP-C19
	5			TRACED	APP'D	

NOTES:

1. MATERIAL:
   CLEAR FILM TAPE (5 MIL THICK)
   DOUBLE ADHESIVE COATED
   TAPE NO. 666
   "SCOTCH" BRAND
   3/4 WIDE X 36 YARD ROLL

2. VENDOR:
   MINN MINING & MFG CO.
   FSCM NO. 26066

5330 DEBBIE LANE
SANTA BARBARA CALIF 93111
964 8676

ELCAM, INC.

Contractors License No 290399

TOLERANCES	REVISIONS			PART NUMBER CP20
UNLESS OTHERWISE SPECIFIED DECIMAL XX ± 00 — XXX ± 00 — ANGULAR ± — DRAFT	NO	DATE	BY	PART NAME SEALING TAPE
	1			DRAWN BY THOMSON / SCALE NONE / MATERIAL SEE NOTE 1
	2			CHK'D HJR / DATE 23 NOV 76 / DRAWING NO ESP-C20
	3			TRACED / APP'D
	4			
	5			

NOTES:

1. MATERIAL:

ABSON [illegible]

B.F. GOODRICH FLAME

RETARDED ABS

2. PART SHALL BE FREE OF CUTS, TEARS, OR FLASH EXCEEDING .01.

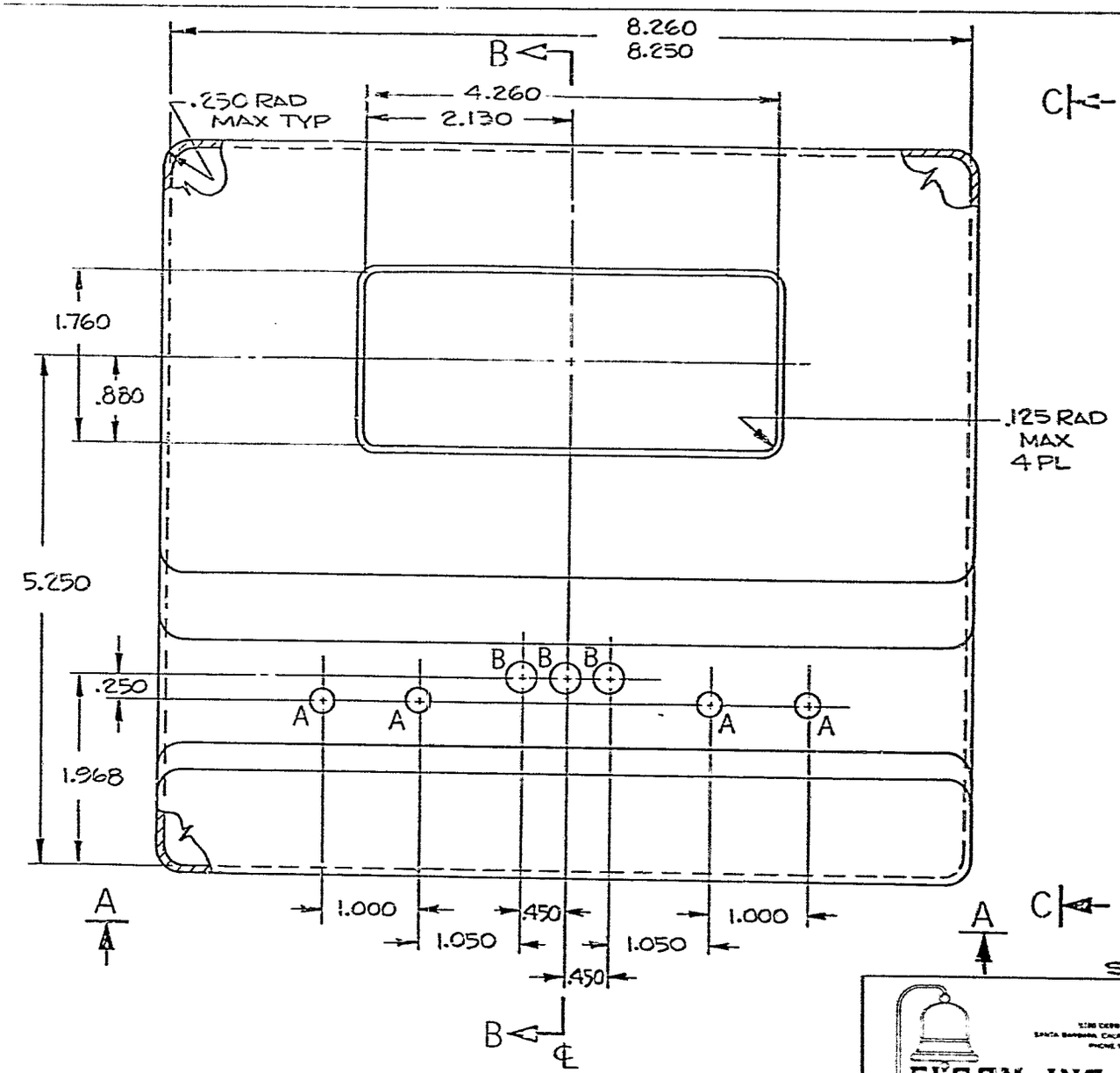

ORIGINAL PAGE IS OF POOR QUALITY

TABLE I

LTR	SIZE	QTY
A	.250-.257 DIA	4
B	.310-.317 DIA	3

SH 1 OF 2

ELCAM, INC.

PART NUMBER	API
PART NAME	COVER
THOMSON	FULL SEE NOTE 1
	7 DEC 76 ESP-A1

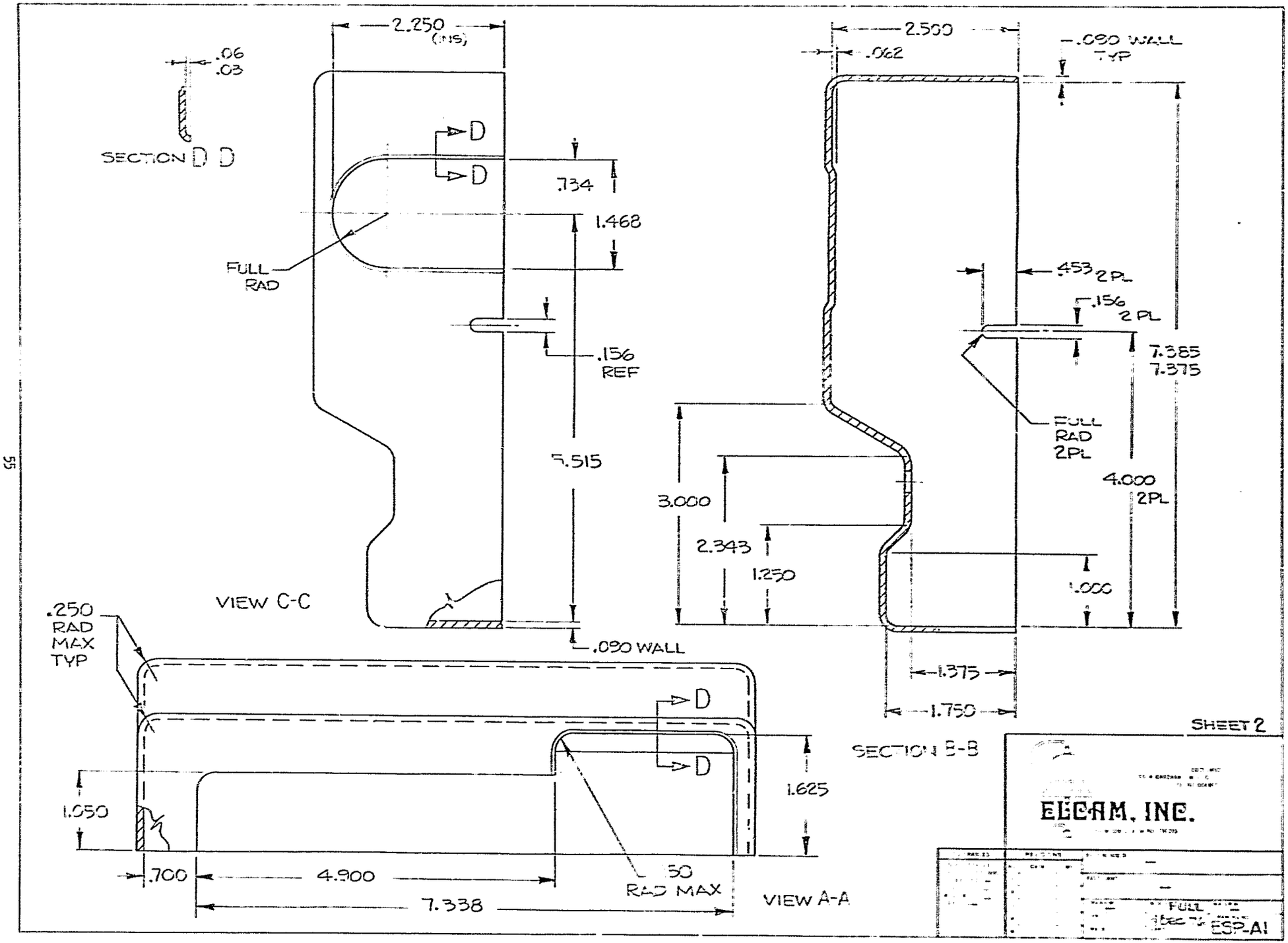
2.250 (INS)
.06
.03
SECTION D D
D
D
.734
1.468
FULL RAD
.156 REF
5.515
.090 WALL
VIEW C-C
2.500
.062
.090 WALL TYP
.453 2PL
.156 2PL
7.385
7.375
FULL RAD 2PL
4.000 2PL
3.000
2.343
1.250
1.000
1.375
1.750
SECTION B-B
.250 RAD MAX TYP
D
D
1.050
1.625
.700
4.900
7.338
50 RAD MAX
VIEW A-A
SHEET 2
ELCAM, INC.
FULL
ESP-A1

NOTES:

1. MATERIAL:
   PHOTOGRAPHIC PAPER
   PRESSURE SENSITIVE ADHESIVE
   BACKED WITH PROTECTIVE BACKING
   PAPER.

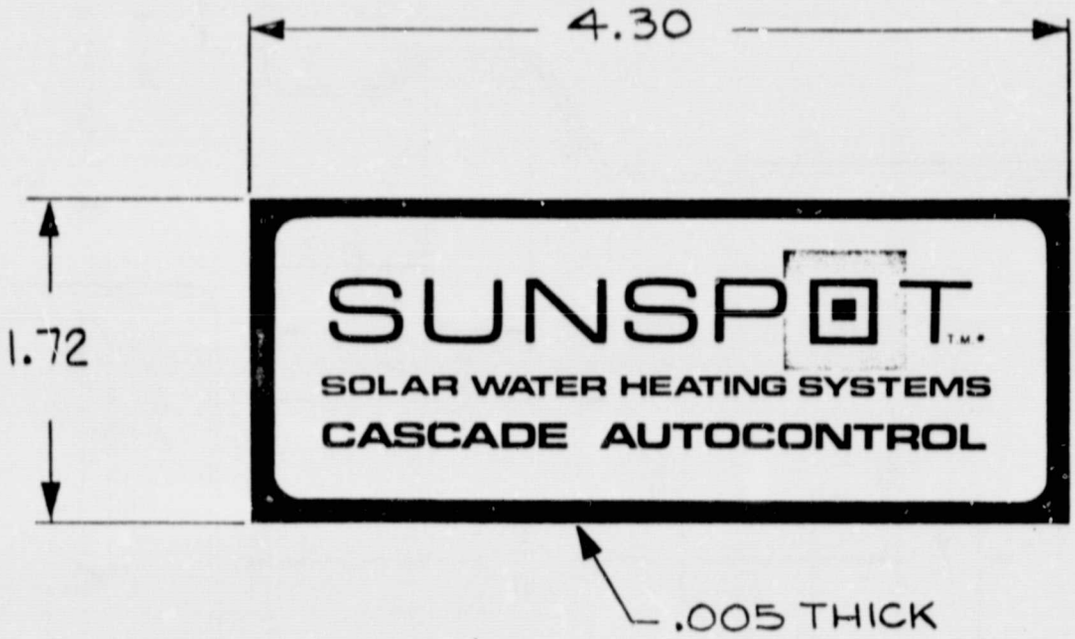

5330 DEBBIE LANE
SANTA BARBARA, CALIF. 93111
PHONE 964 8693

ELCAM, INC.

Contractors License No. 290399

TOLERANCES	REVISIONS			PART NUMBER		
UNLESS OTHERWISE SPECIFIED DECIMAL XX ± .02 XXX ± .00 ANGULAR ± — DRAFT	NO	DATE	BY	AP 2		
	1			PART NAME LABEL, AUTOCONTROL		
	2			DRAWN BY THOMSON	SCALE FULL	MATERIAL SEE NOTE 1
	3			CHK'D	DATE 5 DEC 76	DRAWING NO ESP- A2
	4			TRACED	APP'D	
	5					

NOTES:

1. MATERIAL:
   STEEL, CARBON
   CMPSN 1010 TEMP 4
   NO. 18 GA (.048)

2. PROTECTIVE FINISH:
   ZINC PLATE
   .0002 MIN THICKNESS
   CLEAR CHROMATE
   SPEC QQ-Z-325

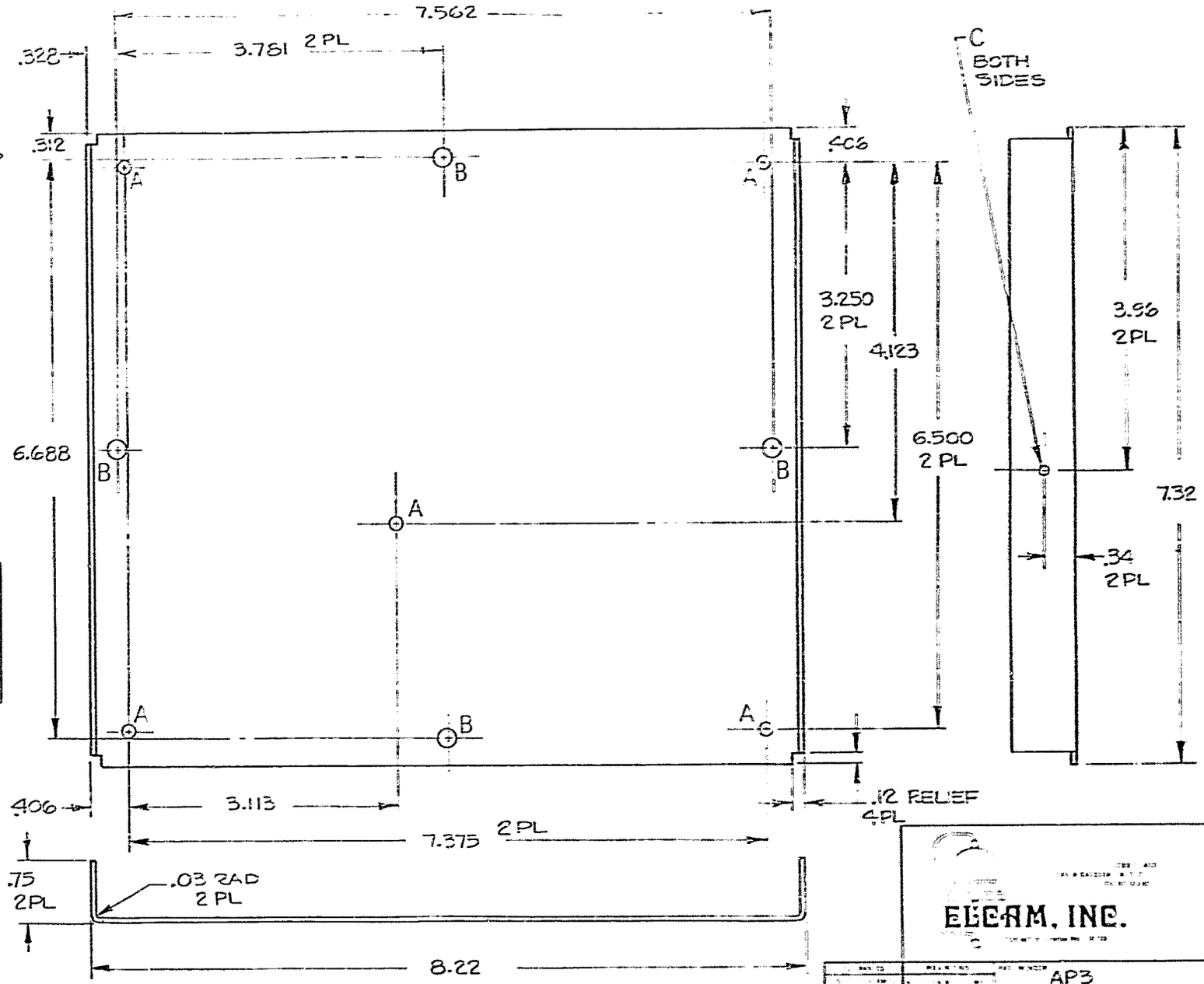

TABLE I

LTR	SIZE	QTY
A	.156 - .162	4
B	.203 - .209	5
C	.108 - .113	2

ELCAM, INC.

AP3

BASE PLATE

SPEC TO ESP.A3

NOTES:

1. MATERIAL:
   ALUM ALLOY
   CMPSN 2011, TEMPER T3

2. PROTECTIVE FINISH:
   CLEAR CHROMATE

3. PART NO. 2106-632-A-0 (RAF)
   PART NO. 350-7417-08-19 (CAMBION)

4. SUGGESTED SOURCE(S) OF SUPPLY:
   RAF ELECTRONIC HARDWARE INC
   260 HATHAWAY
   STRATFORD, CONN. 06497

   CAMBRIDGE THERMIONIC
   CORP (CAMBION)
   FSCM 71279

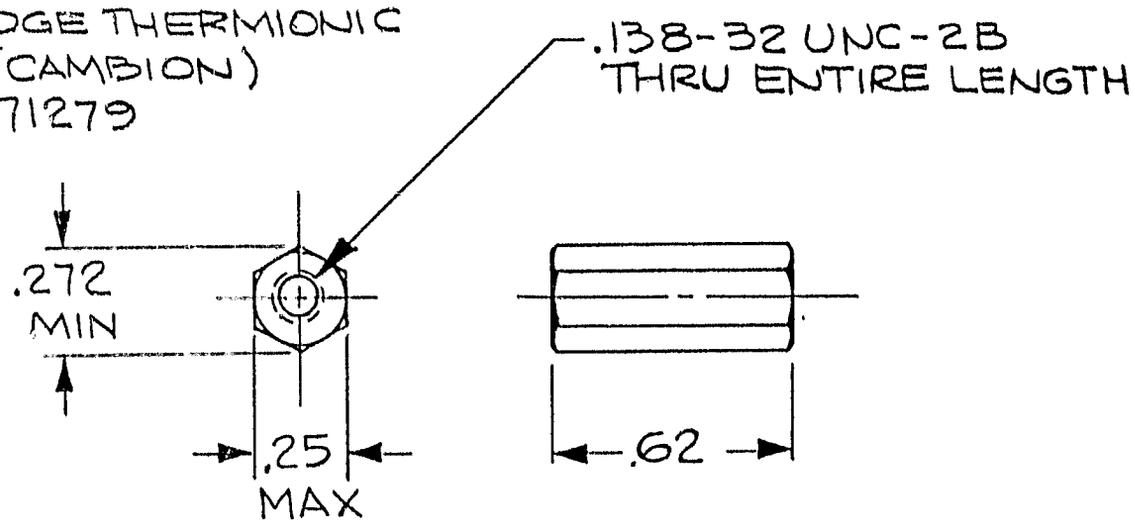

5330 DEBBIE LANE
SANTA BARBARA, CALIF. 93111
964-8676

ELCAM, INC.

Contractors License No. 290399

TOLERANCES	REVISIONS			PART NUMBER		
UNLESS OTHERWISE SPECIFIED DECIMAL XX ± 00 2 .XXX ± 00 — ANGULAR ± DRAFT	NO	DATE	BY	AP4		
	1			PART NAME STANDOFF		
	2					
	3			DRAWN BY THOMSON	SCALE 2/1	MATERIAL SEE NOTE 1
	4			CHK'D	DATE 5 DEC 76	DRAWING NO ESP-A4
	5			TRACED	APP'D	

NOTES:

1. MATERIAL:
   ALUMINUM ALLOY
   CMPSN 6063 TEMPER T5

2. PROTECTIVE FINISH:
   CHEM FILM (ALODINE)
   FINISH COAT WITH MARTIN
   NO. 23 (LUSTER-LESS BLACK)
   ON INDICATED SURFACES.

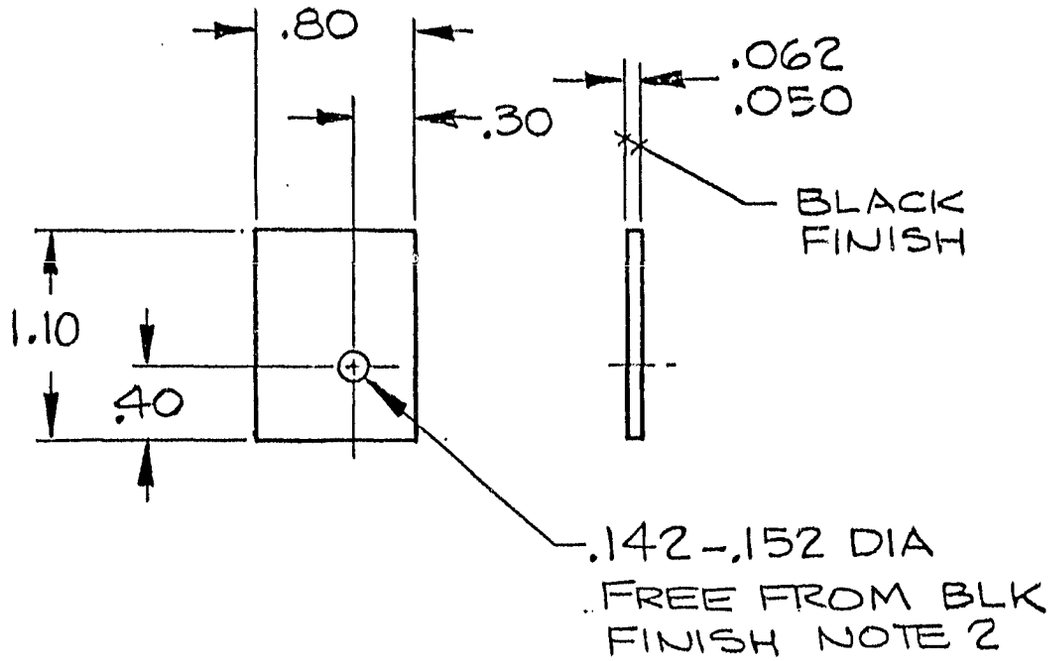

5330 DEBBIE LANE
SANTA BARBARA, CALIF. 93111
964-8676

ELCAM, INC.

Contractors License No. 290399

TOLERANCES	REVISIONS					
UNLESS OTHERWISE SPECIFIED DECIMAL .XX ± 0.0 2 .XXX ± 0.0 — ANGULAR ± DRAFT	NO	DATE	BY	PART NUMBER AP5		
	1			PART NAME HEAT SINK		
	2					
	3			DRAWN BY THOMSON	SCALE FULL	MATERIAL SEE NOTE 1
	4			CHK'D	DATE 7 DEC 76	DRAWING NO ESP-A5
	5			TRACE'D	APP'D	

NOTES:

1. MATERIAL:

TAPPING SCREW,

SLOTTED PAN HEAD,

STEEL, CARBON

AISI 1016 TO 1024

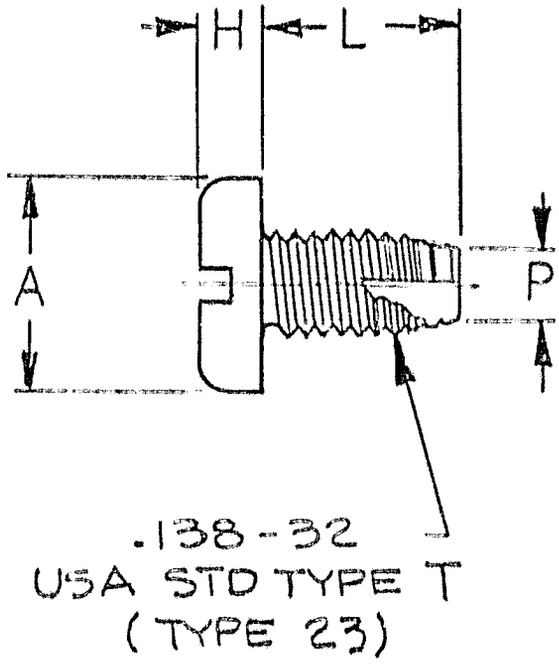

TABLE I

PART NO.	A	H	L	P
AP6 -001	.256-.270	.072-082	.22 - .25	.095-.106
AP6 -002	.256-.270	.072-082	.35 - .38	.095-.106

TABLE II

DESIGN RECOMMENDATION

THICKNESS	HOLE SIZES FOR	
	STEEL	ALUM
.060	.113 (#33)	.109 (7/64)
.083	.116 (#32)	.111 (#34)

5330 DEBDIE LANE
SANTA BARBARA, CALIF 93111
964-8676

ELCAM, INC.

Contractors License No 290399

TOLERANCES	REVISIONS			PART NUMBER	
UNLESS OTHERWISE SPECIFIED DECIMAL XX ± .00 — XXX ± .00 — ANGULAR ± DRAFT	NO	DATE	BY	AP 6	
				PART NAME SCREW, SELF TAPPING	
				DRAWN BY THOMSON	SCALE NONE	MATERIAL SEE NOTE 1
				CHK D	DATE 4 DEC 76	DRAWING NO ESP- A6
				TRACED	APP D	

60

NOTES:

1. MATERIAL:
   EPOXY RESIN PLASTIC LAM GLASS BASE, COPPER CLAD ONE SIDE, 1 OZ MIN.
2. MUST BE FREE FROM BURRS & SHARP EDGES.
3. DO NOT DEBURR COPPER FOIL.
6. SOLDER COAT 60/40 .0005 MIN AND FUSED.
7. LOCATED UNDIM HOLES FROM ETCHED PATTERN.
8. HOLES SHALL NOT BREAK OUT OF TERMINAL CIRCUIT PATH.

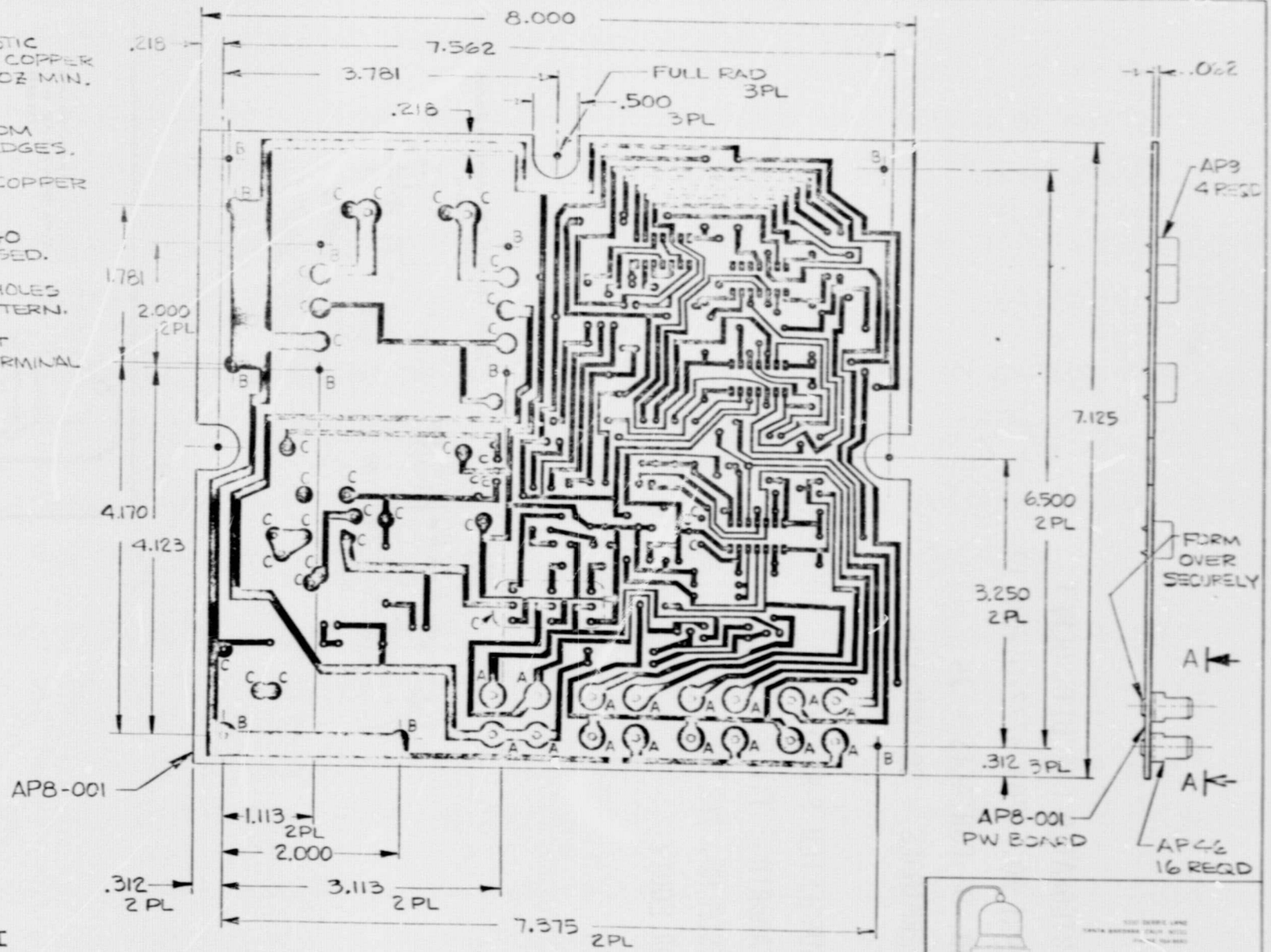

TABLE I

LTR	HOLE SIZE	QTY
A	.150 - .157	16
B	.156 - .162	11
C	.056 - .062	41
UNMARKED	.034 - .038	TYP

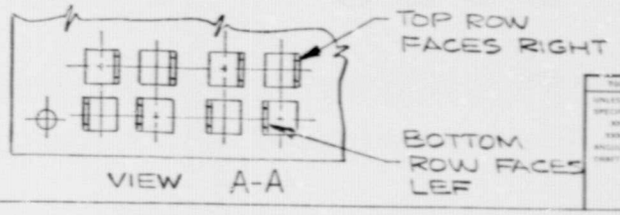

ELCAM, INC.

PART NUMBER	AP8
PART NAME	PRINTED WIRING BOARD ASSY
THOMSON	FULL SCALE NOTE 1
	11 DEC 76 ESP-A8

ORIGINAL PAGE IS OF POOR QUALITY

NOTES:

1. INTEGRATED CIRCUIT SOCKET
   PART NO. =703-3777-01-04-12
   NO. OF CONTACTS = 14
   TERMINALS = SOLDER TAB

2. SUGGESTED SOURCE(S) OF SUPPLY:
   CAMBRIDGE THERMIONIC CORP (CAMBION)
   FSCM NO. 71279
   OR EQUIV

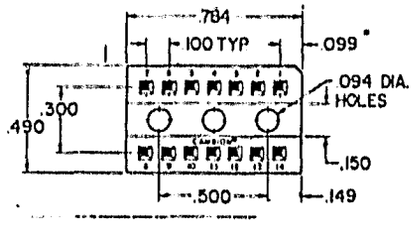

Solder Tab with Anti-Moisture Bosses
Dimensions

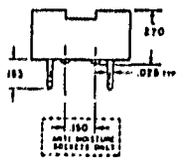

5330 DEBBIE LANE
SANTA BARBARA, CALIF. 93111
964-8676

ELCAM, INC.

Contractors License No 290399

TOLERANCES	REVISIONS			PART NUMBER		
UNLESS OTHERWISE SPECIFIED DECIMAL .XX ± 0.0 .XXX ± 0.0 ANGULAR ± DRAFT	NO	DATE	BY	AP 9		
	1			PART NAME I.C. SOCKET		
	2					
	3			DRAWN BY THOMSON	SCALE NONE	MATERIAL SEE NOTE 1
	4			CHK'D	DATE 1 DEC 76	DRAWING NO ESP-A9
	5			TRACED	APP'D	

NOTES:

1. INTEGRATED CIRCUIT
   PART NO. LM324N
   OPERATIONAL AMPLIFIER

2. SUGGESTED SOURCE(S) OF SUPPLY:
   NATIONAL SEM-COND CORP
   FSCM NO.27014
   OR EQUIV

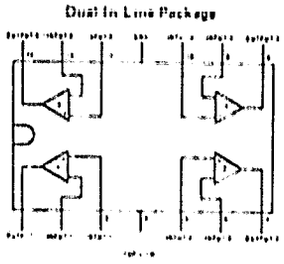

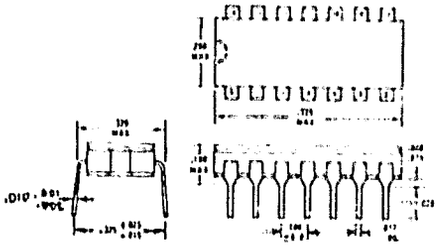

14 LEAD CAVITY DIP

5330 DEBBIE LANE
SANTA BARBARA CALIF 93111
964-8676

ELCAM, INC.

Contractors Licence No 290399

TOLERANCES	REVISIONS			PART NUMBER		
UNLESS OTHERWISE SPECIFIED DECIMAL XX ± 00 — XXX ± 00 — ANGULAR ± DRAFT	NO	DATE	BY	AP 10		
	1			PART NAME I.C. LM324N OPER-AMPL		
	2					
	3			DRAWN BY THOMSON	SCALE NONE	MATERIAL SEE NOTE 1
	4			CHK'D	DATE 1 DEC 76	DRAWING NO ESP-A10
	5			TRACED	APP'D	

NOTES:

1. DIGITAL INTEGRATED CIRCUIT
   PART NO. CD4011 A/E,, QUAD 2 INPUT

2. SUGGESTED SOURCE(S) OF SUPPLY:
   R.C.A. CORP SOLID STATE DIV
   FSCM NO. 18714
   OR EQUIV

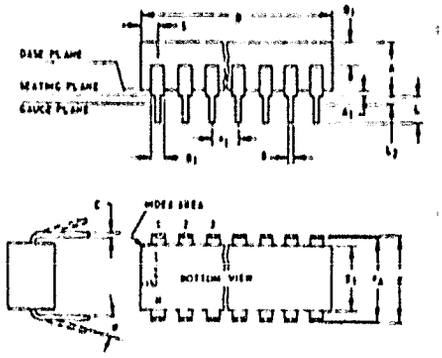

(E), Suffixes
JEDEC MO-001-AB
14-Lead

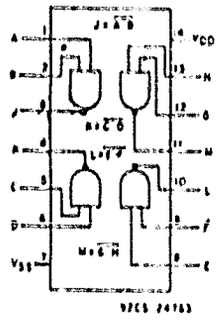

CD4011AE

PLASTIC PACKAGE
(E SUFFIX)

SYMBOL	INCHES MIN.	INCHES MAX	NOTE
A	0.155	0.200	
A_1	0.020	0.050	
B	0.014	0.020	
B_1	0.050	0.065	
C	0.008	0.012	1
D	0.745	0.770	
E	0.300	0.325	
E_1	0.240	0.260	
e_1	0.100 TP		2
e_A	0.300 TP		2, 3
L	0.125	0.150	
L_2	0.000	0.030	
α	0°	15°	4
N	14		5
N_1	0		6
Q_1	0.040	0.075	
S	0.065	0.090	

NOTES:
Refer to Rules for Dimensioning (JEDEC Publication No. 13) for Axial Lead Product Outlines

1. When this device is supplied solder dipped, the maximum lead thickness (narrow portion) will not exceed 0.013" (0.33 mm).
2. Leads within 0.005" (0.12 mm) radius of True Position (TP) at gauge plane with maximum material condition and unit installed.
3. e_A applies in zone L_2 when unit installed.
4. α applies to spread leads prior to installation.
5. N is the maximum quantity of lead positions.
6. N_1 is the quantity of allowable missing leads.

5330 DEBBIE LANE
SANTA BARBARA, CALIF 93111
964-8670

ELCAM, INC.

Contractors License No 290399

TOLERANCES	REVISIONS			PART NUMBER		
UNLESS OTHERWISE SPECIFIED DECIMAL XX ± 0.0 — XXX ± 0.0 — ANGULAR ± DRAFT	NO	DATE	BY	AP 11		
				PART NAME IC-CD4011 LOGIC CHIP		
				DRAWN BY THOMSON	SCALE NONE	MATERIAL SEE NOTE 1
				CHK'D	DATE 1 DEC 76	DRAWING NO ESP-A11
				TRACED	APP'D	

NOTES:

1. TRANSISTOR
   PART NO. 2N4401

2. SUGGESTED SOURCE(S) OF SUPPLY:
   FAIRCHILD SEMI-COND
   FSCM 07263
   OR EQUIV

TABLE I

MAXIMUM RATINGS (T_A = 25°C UNLESS OTHERWISE NOTED)

RATING	SYMBOL	VALUE	UNIT
COLLECTOR - EMITTER VOLTAGE	V_{CEO}	40	V_{DC}
COLLECTOR BASE VOLTAGE	V_{CB}	60	V_{DC}
EMITTER BASE VOLTAGE	V_{EB}	60	V_{DC}
COLLECTOR CURRENT-CONTINUOUS	I_C	600	mA_{DC}
TOTAL DEVICE DISSIPATION T_A =25°C DERATE ABOVE 25°C	P_D	310 2.81	MW MW/°C
OPERATING & STORAGE JUNCTION TEMPERATURE RANGE	T_J T_{STG}	-55 TO +135	°C

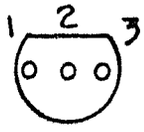

STYLE 1
PIN 1 EMITTER
PIN 2 BASE
PIN 3 COLLECTOR

5330 DEBDIE LANE
SANTA BARBARA, CALIF 93111
964-8676

ELCAM, INC.

Contractors License No 290399

TOLERANCES	REVISIONS			PART NUMBER AP 12		
UNLESS OTHERWISE SPECIFIED DECIMAL XX ± 0.0 — .XXX ± 0.0 — ANGULAR ± DRAFT	NO	DATE	BY	PART NAME TRANSISTOR 2N4401		
	1			DRAWN BY THOMSON	SCALE NONE	MATERIAL SEE NOTE 1
	2			CHK'D	DATE 1 DEC 76	DRAWING NO ESP-A12
	3			TRACED	APP'D	
	4					
	5					

NOTES:

1; TRANSISTOR

PART NO. 2N4403

2. SUGGESTED SOURCE(S) OF SUPPLY:

FAIRCHILD SEMI-COND

FSCM 07263

OR EQUIV

TABLE I

MAXIMUM RATINGS (T_A = 25°C UNLESS OTHERWISE NOTED)

RATING	SYMBOL	VALUE	UNIT
COLLECTOR - EMITTER VOLTAGE	V_{CEO}	40	V_{DC}
COLLECTOR - BASE VOLTAGE	V_{CB}	40	V_{DC}
EMITTER - BASE VOLTAGE	V_{EB}	5.0	V_{DC}
COLLECTOR CURRENT - CONTINUOUS	I_C	600	mA_{DC}
TOTAL DEVICE DISSIPATION T_A=25°C DERATE ABOVE 25°C	P_D	310 2.81	MW MW/°C
OPERATING & STORAGE JUNCTION TEMPERATURE RANGE	T_J, T_{STG}	-55 TO +135	°C

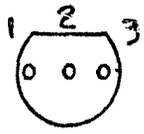

STYLE 1

PIN 1 EMITTER

PIN 2 BASE

PIN 3 COLLECTOR

5330 DEBBIE LANE
SANTA BARBARA, CALIF. 93111
964-8670

ELCAM, INC.

Contractors License No 290399

TOLERANCES	REVISIONS			PART NUMBER		
UNLESS OTHERWISE SPECIFIED DECIMAL XX ± 0.0 – XXX ± 0.0 – ANGULAR ± DRAFT	NO	DATE	BY	AP 13		
				PART NAME TRANSISTOR 2N4403		
				DRAWN BY THOMSON CHK'D TRACED	SCALE NONE DATE 2 DEC 76 APP'D	MATERIAL SEE NOTE 1 DRAWING NO ESP -A13

NOTES:

1. TRIAC (THYRISTOR)
   PART NO. GENERAL ELECTRIC SC137-A
   OR
   PART NO. MOTOROLA 2N6070A

2. SUGGESTED SOURCE(S) OF SUPPLY:
   MOTOROLA INC SEMI-COND PRODUCTS DIV
   FSCM NO. 04713

   GENERAL ELECTRIC CO. SEMI-CONDUCTOR
   FSCM NO. 09214

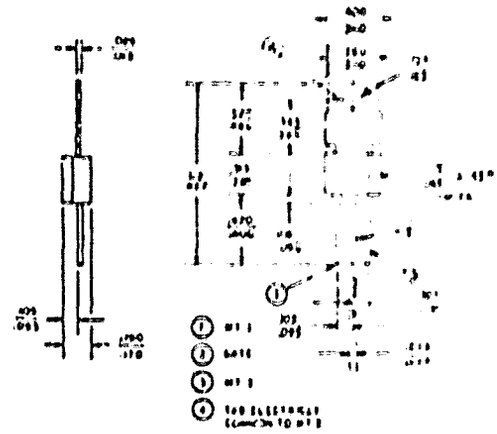

TYPE I

TABLE I

PART NO.	VENDOR PART NO.	
	MOTOROLA	GENERAL ELECTRIC
AP 14	2N6070A	SC137A

TABLE II
ELECTRICAL SPECIFICATIONS

CHARACTERISTIC	SYMBOL	MIN	TYP	MAX	UNIT
PEAK ON-STATE SURGE CURRENT ONE FULL CYCLE (NON REP)	I_{TSM}	–	–	30	AMPS
REPETITIVE OFF-STATE VOLTAGE	V_{DRM}	–	–	100	VOLTS
RMS ON-STATE CURRENT 360° CONDUCTION	I_T (RMS)	–	–	3	AMPS
PEAK GATE TRIGGER CURRENT	QUADRANT	I	II	III	IV
MAXIMUM VALUE (MA)	I_{CTM} @TJ 25°C	10	10	10	10

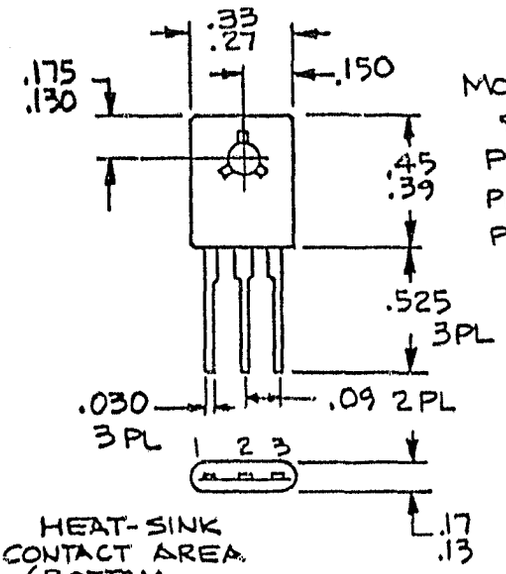

CASE 77-02

MOTOROLA
STYLE 5
PIN 1 MT1
PIN 2 MT2
PIN 3 GATE

5330 DEBBIE LANE
SANTA BARBARA, CALIF 93111
964-8676

ELCAM, INC.

Contractors License No 290399

TOLERANCES	REVISIONS			PART NUMBER		
UNLESS OTHERWISE SPECIFIED DECIMAL XX ± .00 — XXX ± .00 — ANGULAR ± DRAFT	NO	DATE	BY	AP 14		
				PART NAME TRIAC (THYRISTOR)		
				DRAWN BY THOMSON	SCALE NONE	MATERIAL SEE NOTE 1
				CHK'D	DATE 2 DEC 76	DRAWING NO ESP-A14
				TRACED	APP'D	

NOTES:

1. VOLTAGE REGULATOR
   PART NO. FUA 7812UC

2. SUGGESTED SOURCE(S) OF SUPPLY:
   FAIRCHILD SEMI-COND
   FSCM 07263
   OR EQUIV.

STANDARD APPLICATION

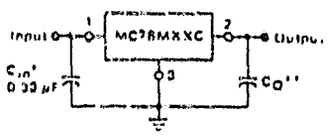

A common ground is required between the input and the output voltages. The input voltage must remain typically 2.0 V above the output voltage even during the low point on the input ripple voltage.

XX = these two digits of the type number indicate voltage.

* = C_{in} is required if regulator is located an appreciable distance from power supply filter.

** = C_O improves stability and transient response.

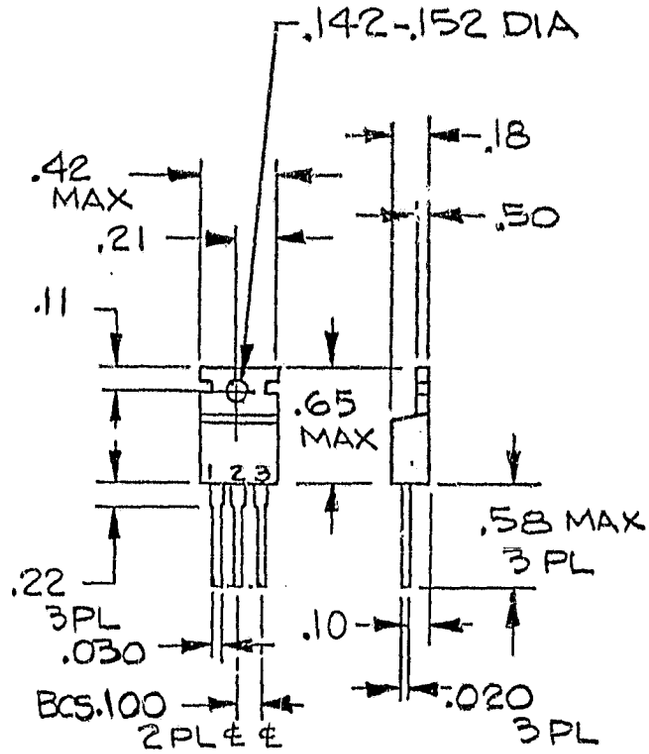

HEAT SINK SURFACE CONNECTED TO PIN 3

ELCAM, INC.
5330 DEBDIE LANE
SANTA BARBARA, CALIF. 93111
964-8676
Contractors License No. 290399

TOLERANCES	REVISIONS			PART NUMBER		
UNLESS OTHERWISE SPECIFIED DECIMAL .XX ± 0.0 .XXX ± 0.0 ANGULAR ±	NO	DATE	BY	AP 15		
				PART NAME UA 7812 VOLTAGE REGULATOR		
DRAFT VENDOR'S TOL APPLY				DRAWN BY THOMSON	SCALE NONE	MATERIAL SEE NOTE 1
				CHK D	DATE 2 DEC 76	DRAWING NO ESP-A15
				TRACED	APP D	

NOTES:

1. LCIC-UADC12 RELAY
   PART NO. LCIC-UADC12

2. SUGGESTED SOURCE(S) OF SUPPLY:
   OMRON CORP OF AMERICA
   1050 STATE PARKWAY,
   SCHAUMBURG, ILL. 60172
   OR EQUIV.

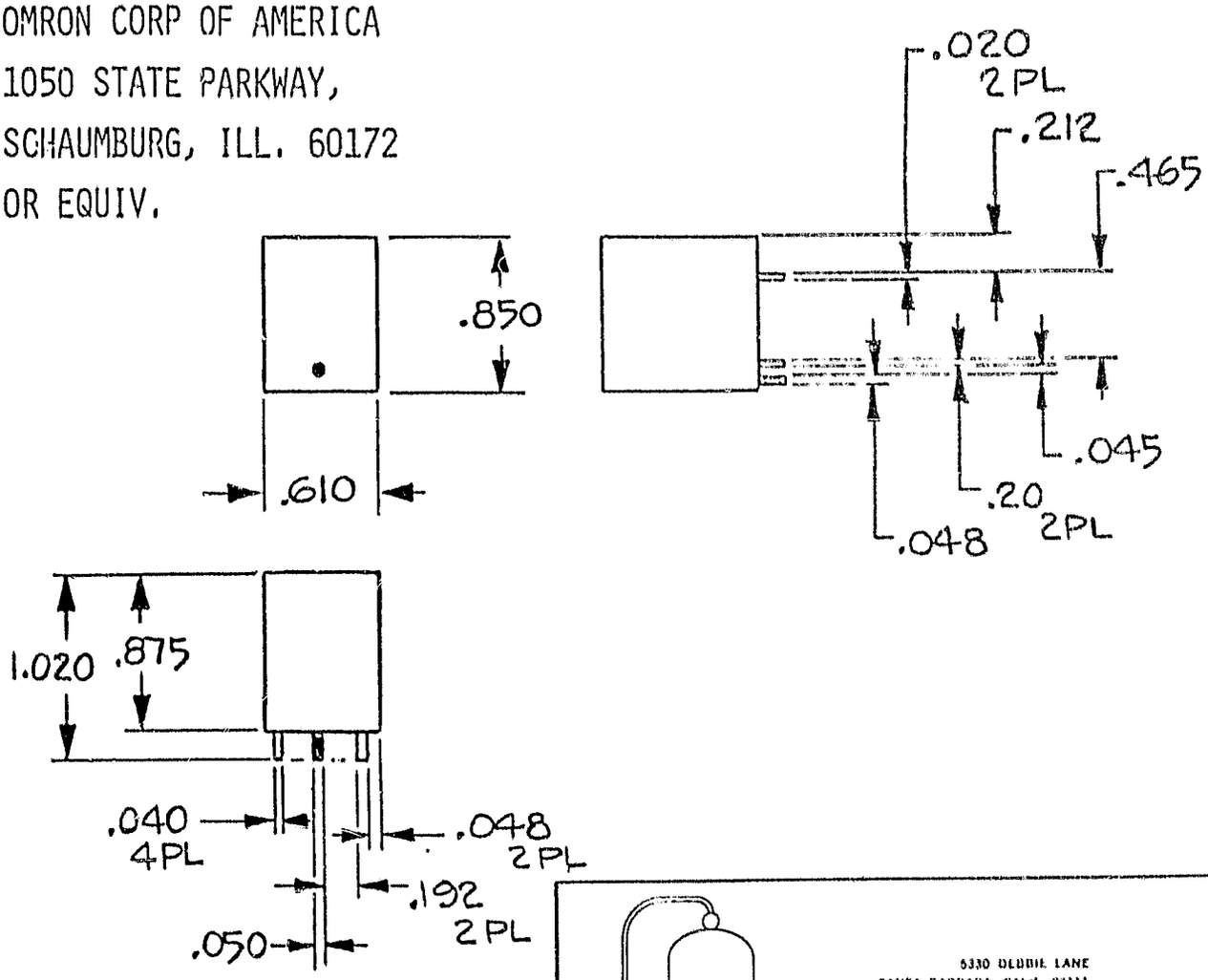

5330 DEBBIE LANE
SANTA BARBARA, CALIF 93111
964-8678

ELCAM, INC.

Contractors License No 290399

TOLERANCES	REVISIONS			PART NUMBER		
UNLESS OTHERWISE SPECIFIED DECIMAL XX ± 0.0 — XXX ± 0.008 ANGULAR ± DRAFT	NO	DATE	BY	AP 16		
				PART NAME LCIC-UADC12 RELAY		
				DRAWN BY THOMSON	SCALE FULL	MATERIAL SEE NOTE 1
				CHK'D	DATE 30 NOV 76	DRAWING NO ESP-A16
				TRACED	APP'D	

NOTES:

1. SPST SWITCH
   PART NO. MTA-106D
   TYPE-SPST, 6AMP@125 VAC

2. SUGGESTED SOURCE(S) OF SUPPLY:
   ALCO ELECTRONIC PRODUCTS INC
   FSCM NO. 95146
   OR EQUIV

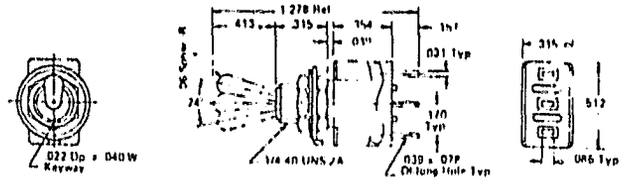

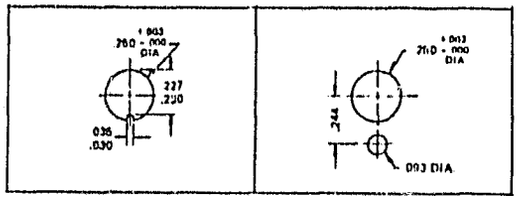

RECOMMENDED PANEL CUTOUTS

6330 DEBBIE LANE
SANTA BARBARA, CALIF. 93111
964-8676

ELCAM, INC.

Contractors License No 290399

TOLERANCES	REVISIONS			PART NUMBER		
UNLESS OTHERWISE SPECIFIED DECIMAL .XX ± 0.0 — .XXX ± 0.0 — ANGULAR ± DRAFT	NO	DATE	BY	AP 17		
	1			PART NAME SPST SWITCH		
	2					
	3			DRAWN BY THOMSON	SCALE NONE	MATERIAL SEE NOTE 1
	4			CHK'D	DATE 30 NOV 76	DRAWING NO ESP-A17
	5			TRACED	APP'D	

NOTES:

1. SPST SWITCH-CENTER OFF
   PART NO.= MTA-106E-PC
   TYPE-SPDT, 6 AMP @ 125 VAC

2. SUGGESTED SOURCE(S) OF SUPPLY:
   ALCO ELECTRONIC PRODUCTS INC
   FSCM NO.95146

   OR EQUIV

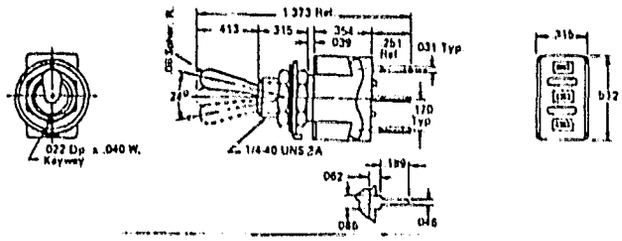

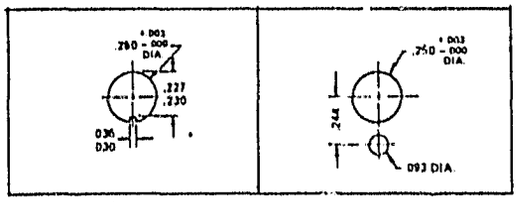

RECOMMENDED PANEL CUTOUTS

5330 DEBBIE LANE
SANTA BARBARA, CALIF 93111
964-0374

ELCAM, INC.

Contractors License No 290399

TOLERANCES	REVISIONS			PART NUMBER		
UNLESS OTHERWISE SPECIFIED DECIMAL .XX ± 0.0 — .XXX ± 0.0 — ANGULAR ± DRAFT	NO	DATE	BY	AP 18		
	1			PART NAME SPDT SWITCH -CENTER OFF		
	2			DRAWN BY THOMSON	SCALE NONE	MATERIAL SEE NOTE 1
	3			CHK'D	DATE 30 NOV 76	DRAWING NO
	4			TRACED	APP'D	ESP-A18
	5					

NOTES:

1. DIODE

   PART NO. IN4002

2. SUGGESTED SOURCE(S) OF SUPPLY:

   MOTOROLA INC. SEMI-COND PRODUCTS DIV

   FSCM NO. 04713

   OR EQUIV

3. NON-REPETITIVE PEAK SURGE CURRENT ($I_{FM[SURGE]}$) = 30A (FOR 1 CYCLE) @ 75°C AMB
4. AVERAGE RECITIFIED FORWARD CURRENT (I_O) = 1.0 AMP AT 75°C AMBIENT
5. PEAK REPETITIVE REVERSE VOLTAGE ($V_{RM[REP]}$) = 100VDC
6. MIN. FORWARD VOLTAGE (V_F MIN) = 0.7 V AT 0.1 AMP, 25°C
7. MAX. FORWARD VOLTAGE (V_F MAX) = 1.1 V AT 1.0 AMP, 25°C
8. MAX. REVERSE CURRENT (I_R MAX) = 10 μA, 25°C AT 100V

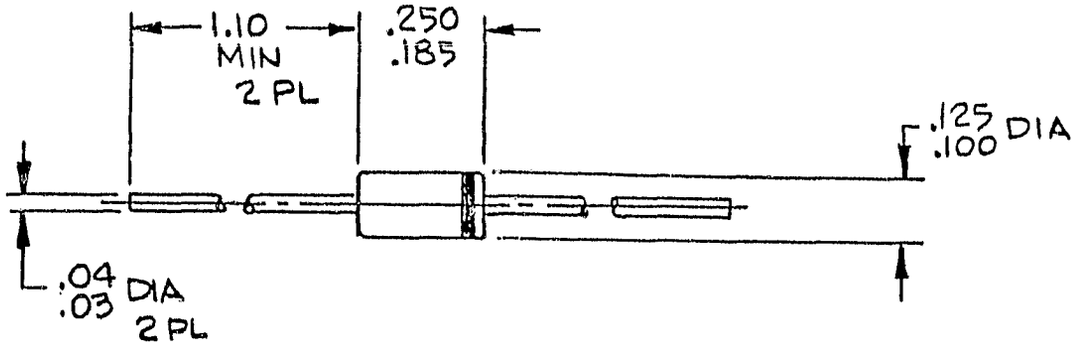

5330 DEBBIE LANE
SANTA BARBARA, CALIF. 93111
964-8676

ELCAM, INC.

Contractors License No 290399

TOLERANCES	REVISIONS			PART NUMBER		
UNLESS OTHERWISE SPECIFIED DECIMAL XX ± 0.0 XXX ± 0.0 ANGULAR ± DRAFT	NO	DATE	BY	AP 19		
				PART NAME IN4002 DIODE		
				DRAWN BY THOMSON	SCALE NONE	MATERIAL SEE NOTE 1
				CHK D	DATE 2 DEC 76	DRAWING NO ESP-A19
				TRACED	APP D	

NOTES:

1. ZENER DIODE

   TYPE IN5231B

2. ZENER REGULATOR VOLTAGE (Vz) = 5.1 VDC ±5%
3. TEST CURRENT (Iz) = 20 mA
4. MAXIMUM ZENER REGULATOR CURRENT (IZM) = 200 mA
5. POWER DISSIPATION (PT) = 500 MW

6. SUGGESTED SOURCE(S) OF SUPPLY:

   TEXAS INSTRUMENTS INC

   FSCM NO. 01295

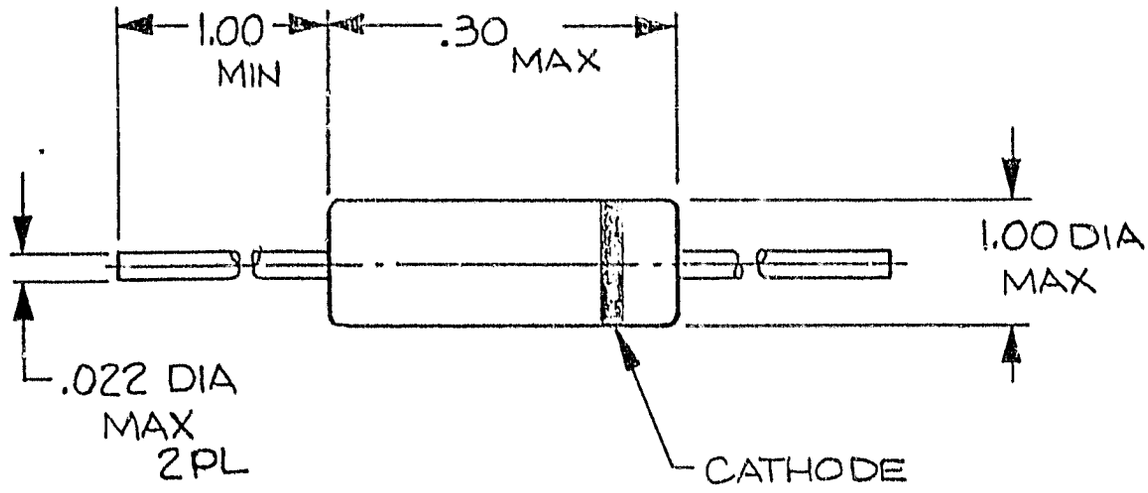

5330 DEBBIE LANE
SANTA BARBARA, CALIF 93111
964-8676

ELCAM, INC.

Contractors License No 290399

TOLERANCES	REVISIONS			PART NUMBER AP 20		
UNLESS OTHERWISE SPECIFIED DECIMAL XX ± 0.0 — XXX ± 0.0 — ANGULAR ± DRAFT	NO	DATE	BY	PART NAME IN5231B ZENER DIODE		
	1			DRAWN BY THOMSON	SCALE NONE	MATERIAL SEE NOTE 1
	2			CHK'D	DATE 3 DEC 76	DRAWING NO ESP-A20
	3			TRACED	APP'D	
	4					
	5					

NOTES:

1. AC-DC LED LAMP
   28 VOLTS
   COLOR = GREEN

2. SUGGESTED SOURCE(S) OF SUPPLY:
   I.D.I. ELECTRIC CANADA LTD
   FSCM No. 51144,
   XCITON CORP
   FSCM NO. 53184
   OR EQUIV

TABLE I

PART NO.	VENDOR PART NO.	
	IDI	XCITON
AP 21	B4304 HI	XC556 OR XC 5053

5330 DEBBIE LANE
SANTA BARBARA, CALIF. 93111
964-8676

ELCAM, INC.

Contractors License No 290399

TOLERANCES	REVISIONS				
UNLESS OTHERWISE SPECIFIED DECIMAL .XX ± 0.0 — .XXX ± 0.0 — ANGULAR ± DRAFT	NO	DATE	BY	PART NUMBER AP 21	
	1	4/15/77	G.C	PART NAME LED-LAMP	
	2				
	3			DRAWN BY THOMSON	SCALE NONE / MATERIAL SEE NOTE 1
	4			CHK'D / DATE 3 DEC 76	DRAWING NO FSP-A21
	5			TRACED / APP'D	

NOTES:

1. FUSE

   CURRENT RATING = 3AMP, 250V

   PART NO. 312003

   TYPE 3AG

2. SUGGESTED SOURCE(S) OF SUPPLY:

   LITTLEFUSE INC

   FSCM NO. 75915

   OR EQUIV

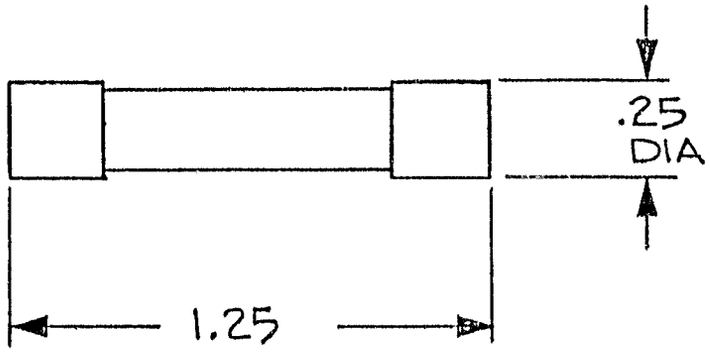

5330 DEBBIE LANE
SANTA BARBARA, CALIF 93111
964-8676

ELCAM, INC.

Contractors License No 290399

TOLERANCES	REVISIONS				
UNLESS OTHERWISE SPECIFIED DECIMAL XX ± 0.0 — XXX ± 0.0 — ANGULAR ± DRAFT	NO	DATE	BY	PART NUMBER AP 23	
	1			PART NAME FUSE	
	2				
	3			DRAWN BY THOMSON / SCALE 2/1	MATERIAL SEE NOTE 1
	4			CHK'D / DATE 3 DEC 76	DRAWING NO ESP-A23
75	5			TRACED / APP'D	

NOTES:

1. CAPACITOR, TANTALUM
   PART NO. WBR 1000-25
   1000 MF, 25VDC,

2. SUGGESTED SOURCE(S) OF SUPPLY:
   CORNING-DUBILIER ELECTRONICS
   FSCM NO. 09023
   OR EQUIV

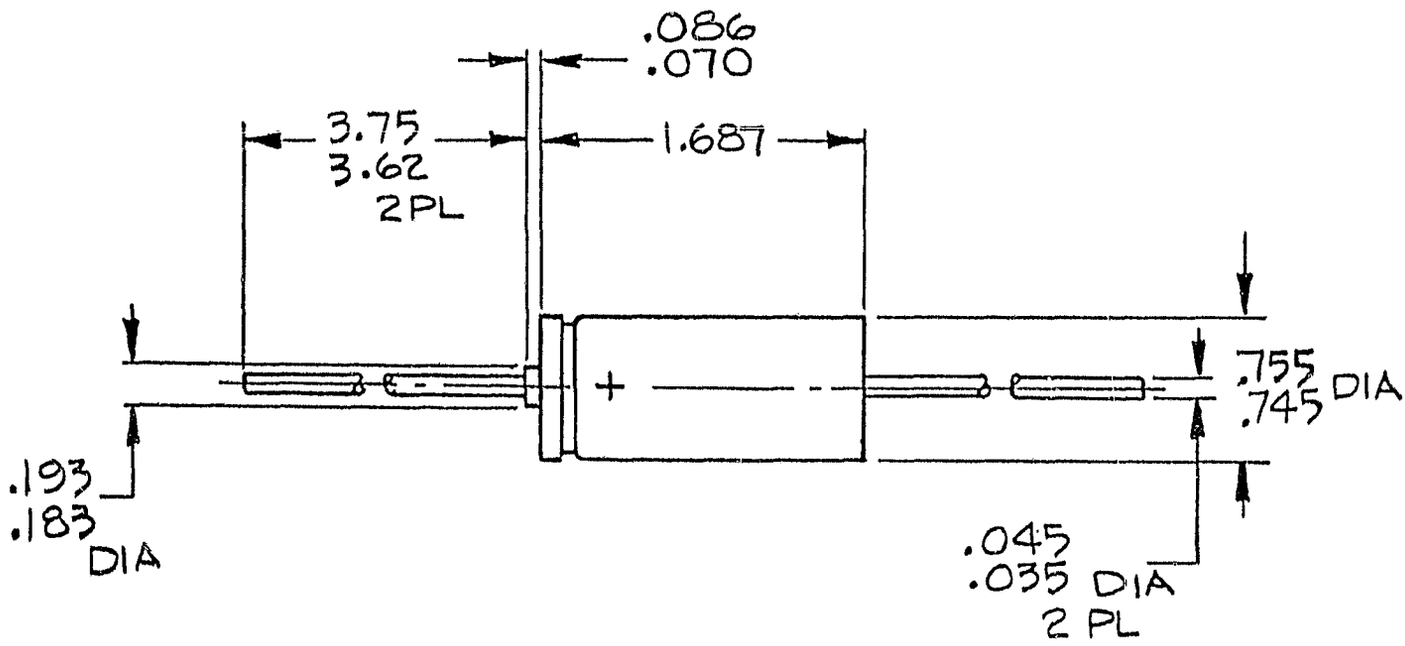

6330 DEBBIE LANE
SANTA BARBARA, CALIF. 93111
964-8676

ELCAM, INC.

Contractors License No 290399

TOLERANCES	REVISIONS					
UNLESS OTHERWISE SPECIFIED DECIMAL .XX ± 0.0 .XXX ± 0.0 ANGULAR ± DRAFT	NO	DATE	BY	PART NUMBER AP 24		
	1			PART NAME CAPACITOR, 1000MF		
	2					
	3			DRAWN BY THOMSON	SCALE FULL	MATERIAL SEE NOTE 1
	4			CHK D	DATE 3 DEC 76	DRAWING NO ESP-A24
	5			TRACED	APP D	

NOTES:

1. CAPACITOR, TANTALUM
   PART NO. WBR 100-25
   100 MF, 25V

2. SUGGESTED SOURCE(S) OF SUPPLY:
   CORNING-DUBILIER ELECTRONICS
   FSCM NO. 09023
   OR EQUIV

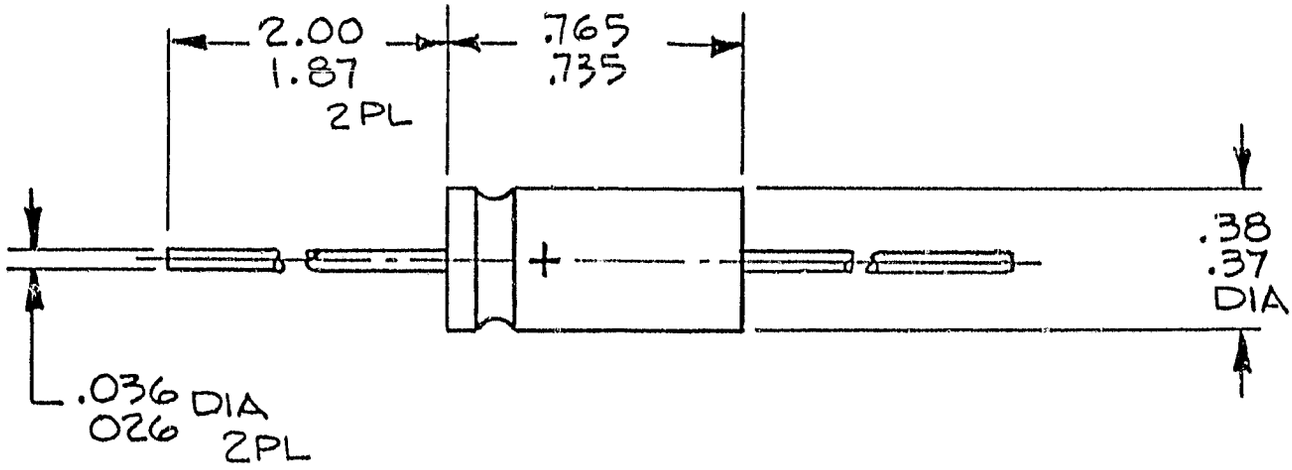

5330 DEBDIE LANE
SANTA BARBARA, CALIF. 93111
964-8676

ELCAM, INC.

Contractors License No 290399

TOLERANCES	REVISIONS			PART NUMBER		
UNLESS OTHERWISE SPECIFIED DECIMAL XX ± 0.0 — XXX ± 0.0 — ANGULAR ± DRAFT	NO	DATE	BY	AP 25		
	1			PART NAME CAPACITOR, 100 MF		
	2					
	3			DRAWN BY THOMSON	SCALE 2/1	MATERIAL SEE NOTE 1
	4			CHK'D	DATE 3 DEC 76	DRAWING NO
	5			TRACED	APP'D	ESP-A25

NOTES:

1. RESISTOR, FIXED
   20 K ,±1%, .25 WATT,
   TYPE, CERMET FILM
2. CONTINUOUS AMBIENT TEMP
   70°c WITHOUT POWER DERATING
3. SUGGESTED SOURCE(S) OF SUPPLY:
   ALLEN BRADLEY CO.
   FSCM NO. 01121
   OR EQUIV

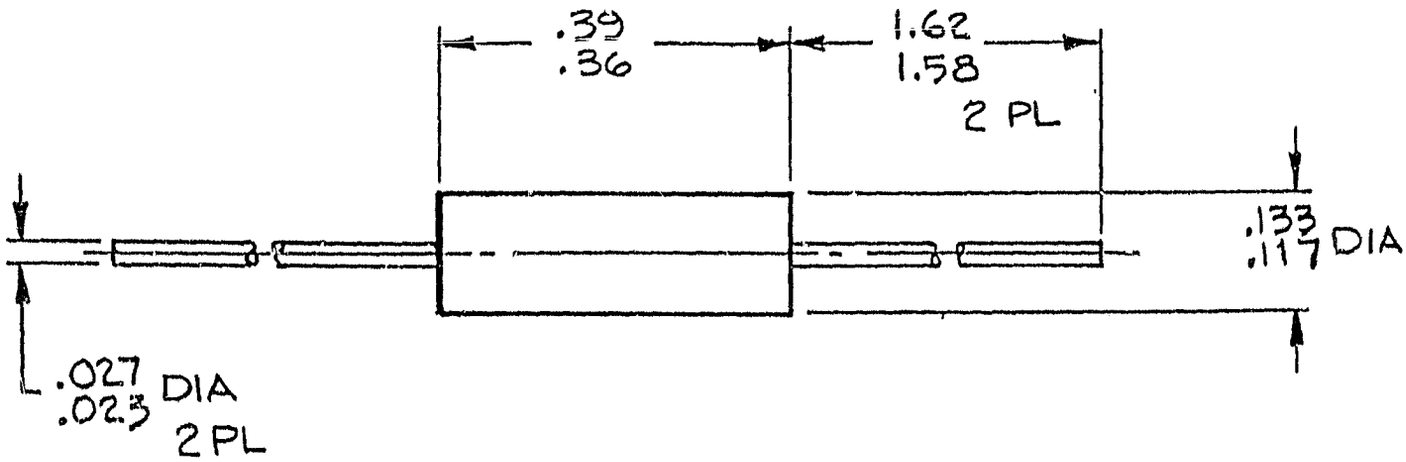

5330 DEBBIE LANE
SANTA BARBARA, CALIF. 93111
964-8676

ELCAM, INC.

Contractors License No 290399

TOLERANCES	REVISIONS			PART NUMBER		
UNLESS OTHERWISE SPECIFIED DECIMAL XX ± 00 — XXX ± 00 — ANGULAR ± DRAFT	NO	DATE	BY	AP 28		
				PART NAME RESISTOR, 20K		
				DRAWN BY THOMSON	SCALE —	MATERIAL SEE NOTE 1
				CHK D	DATE 3 DEC 76	DRAWING NO ESP-A28
78				TRACED	APP D	

NOTES:

1. RESISTOR, FIXED
   75K, ±5%, .25 WATT
   TYPE, CERMET FILM

2. CONTINUOUS AMBIENT TEMP
   70°C WITHOUT POWER DERATING

3. SUGGESTED SOURCE(S) OF SUPPLY:
   ALLEN BRADLEY CO.
   FSCM NO. 01121
   OR EQUIV

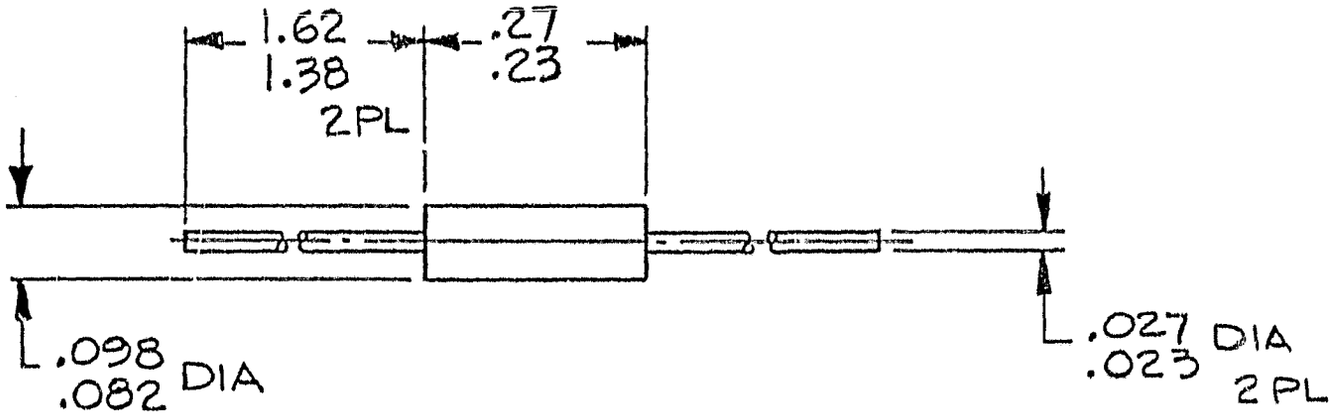

5230 DEBBIE LANE
SANTA BARBARA, CALIF 93111
964-8676

ELCAM, INC.

Contractors License No 290399

TOLERANCES	REVISIONS			PART NUMBER	
UNLESS OTHERWISE SPECIFIED DECIMAL XX ± 00 — XXX ± 00 — ANGULAR ± DRAFT	NO	DATE	BY	AP 29	
				PART NAME RESISTOR, 75K	
				DRAWN BY THOMSON	SCALE NONE	MATERIAL ~~SEE~~ NOTE 1
				CHK'D	DATE 3 DEC 76	DRAWING NO ESP-A29
				TRACED	APP'D	

79

NOTES:

1. RESISTOR, FIXED
   5.11K, ±1% .25 WATT
   TYPE, CERMET FILM
2. CONTINUOUS AMBIENT TEMP
   70°C WITHOUT POWER DERATING
3. SUGGESTED SOURCE(S) OF SUPPLY:
   ALLEN BRADLEY CO.
   FSCM NO. 01121
   OR EQUIV

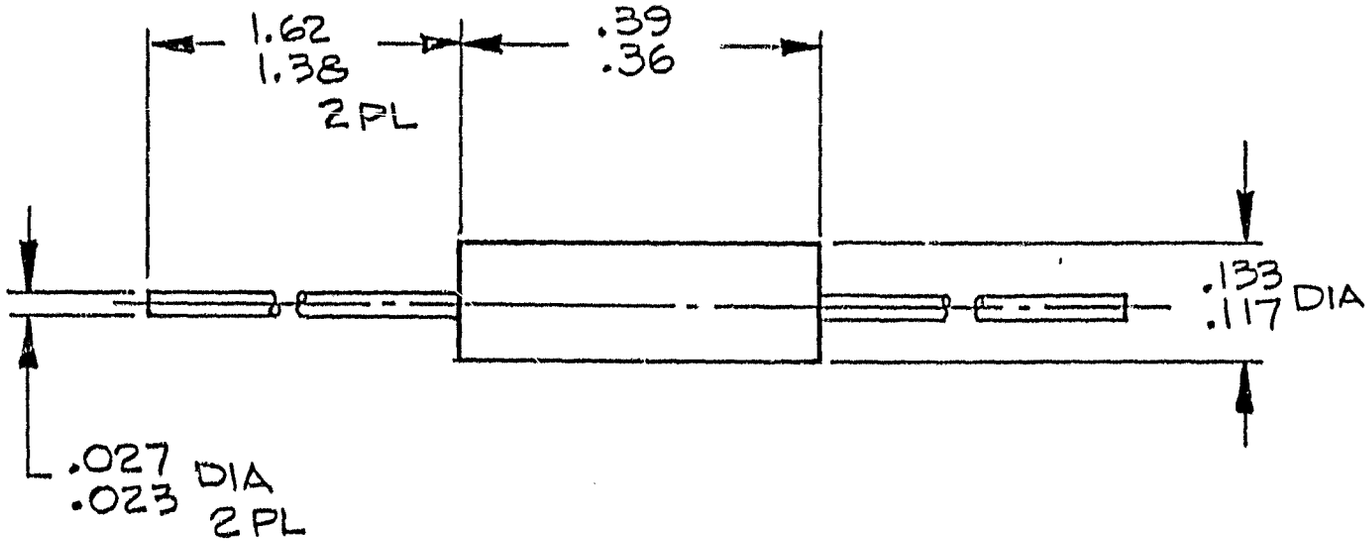

5330 DEBBIE LANE
SANTA BARBARA, CALIF. 93111
964-8676

ELCAM, INC.

Contractors License No 290399

TOLERANCES	REVISIONS			PART NUMBER AP 30		
UNLESS OTHERWISE SPECIFIED DECIMAL XX ± 0.0 XXX ± 0.0 ANGULAR ± DRAFT	NO	DATE	BY	PART NAME RESISTOR, 5.11K		
	1					
	2					
	3			DRAWN BY THOMSON	SCALE NONE	MATERIAL SEE NOTE 1
	4			CHK'D	DATE 4 DEC 76	DRAWING NO ESP-A30
	5			TRACED	APP'D	

NOTES:

1. RESISTOR, FIXED
   2K, ±1%, .25 WATT
   TYPE, CERMET FILM
2. CONTINUOUS AMBIENT TEMP
   70°C WITHOUT POWER DERATING
3. SUGGESTED SOURCE(S) OF SUPPLY:
   ALLEN BRADLEY CO.
   FSCM NO. 01121
   OR EQUIV

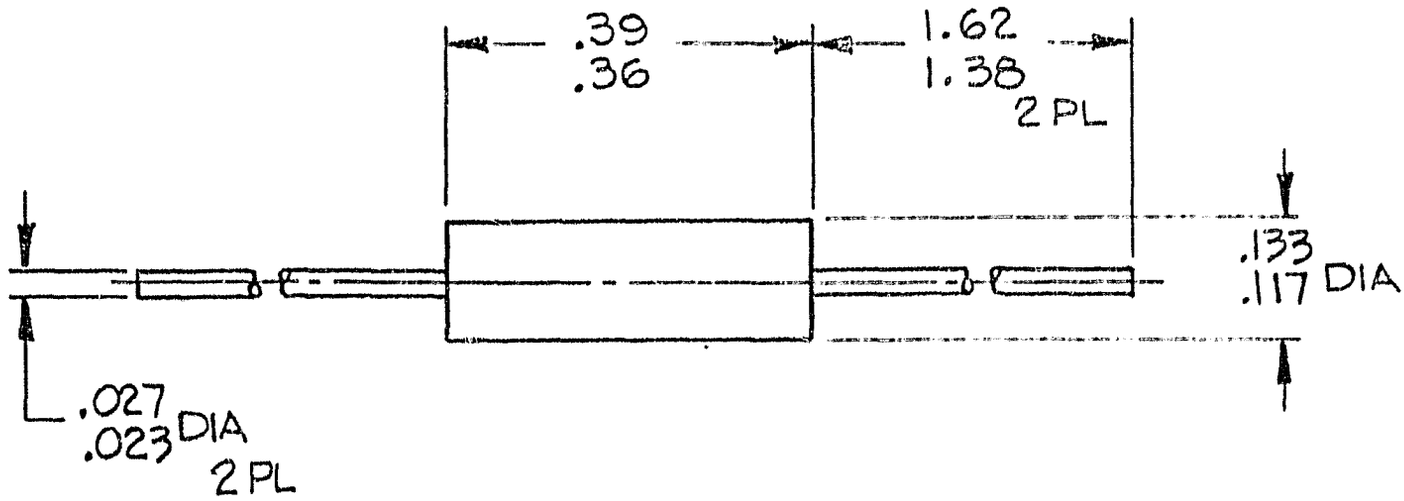

5330 DEBBIE LANE
SANTA BARBARA, CALIF 93111
964 8676

ELCAM, INC.

Contractors License No. 29-399

TOLERANCES	REVISIONS			PART NUMBER AP 32		
UNLESS OTHERWISE SPECIFIED DECIMAL XX ± 0.0 — XXX ± 0.0 — ANGULAR ± DRAFT	NO	DATE	BY	PART NAME RESISTOR, 2K		
	1			DRAWN BY THOMSON	SCALE NONE	MATERIAL SEE NOTE 1
	2			CHK'D	DATE 4 DEC 76	DRAWING NO ESP-32
	3			TRACED	APP'D	
	4					
	5					

NOTES:

1. RESISTOR, FIXED
   1.0K, ±5%, .25 WATT
   TYPE, CB
2. CONTINUOUS AMBIENT TEMP
   70°C WITHOUT POWER DERATING
3. SUGGESTED SOURCE(S) OF SUPPLY:
   ALLEN BRADLEY CO.
   FSCM NO. 01121
   OR EQUIV

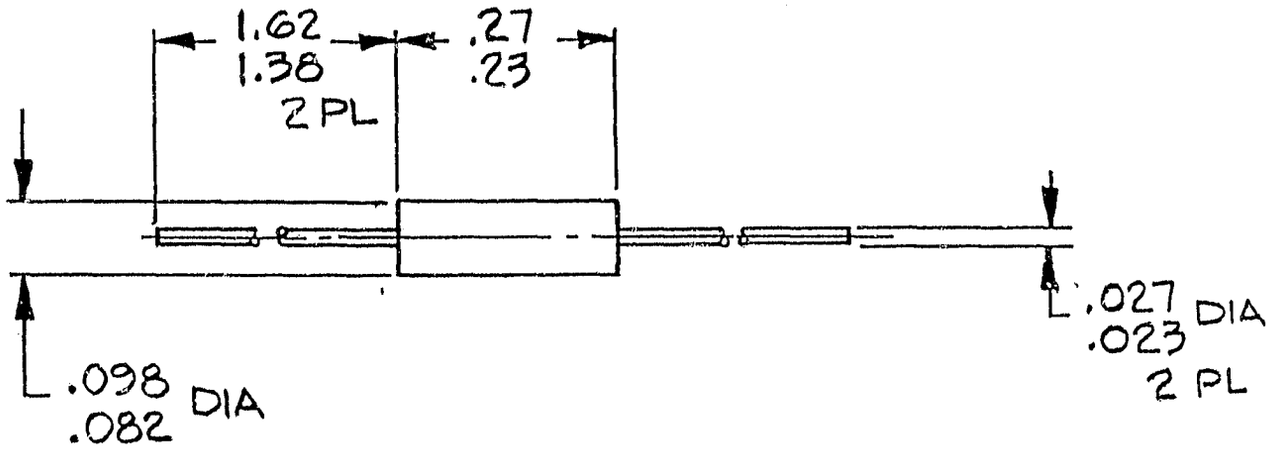

5330 DEBBIE LANE
SANTA BARBARA, CALIF. 93111
964-8676

ELCAM, INC.

Contractors License No 290399

TOLERANCES	REVISIONS					
UNLESS OTHERWISE SPECIFIED DECIMAL .XX ± 0.0 .XXX ± 0.0 ANGULAR ± DRAFT	NO	DATE	BY	PART NUMBER	AP 34	
	1			PART NAME	RESISTOR, 1.0K	
	2					
	3			DRAWN BY THOMSON	SCALE NONE	MATERIAL SEE NOTE 1
	4			CHK D	DATE 4 DEC 76	DRAWING NO ESP-34
	5			TRACED	APP D	

NOTES:

1. RESISTOR, FIXED
   10K, ±5%, .25 WATT
   TYPE, CB

2. CONTINUOUS AMBIENT TEMP
   70°C WITHOUT POWER DERATING

3. SUGGESTED SOURCE(S) OF SUPPLY:
   ALLEN BRADLEY CO.
   FSCM NO. 01121
   OR EQUIV

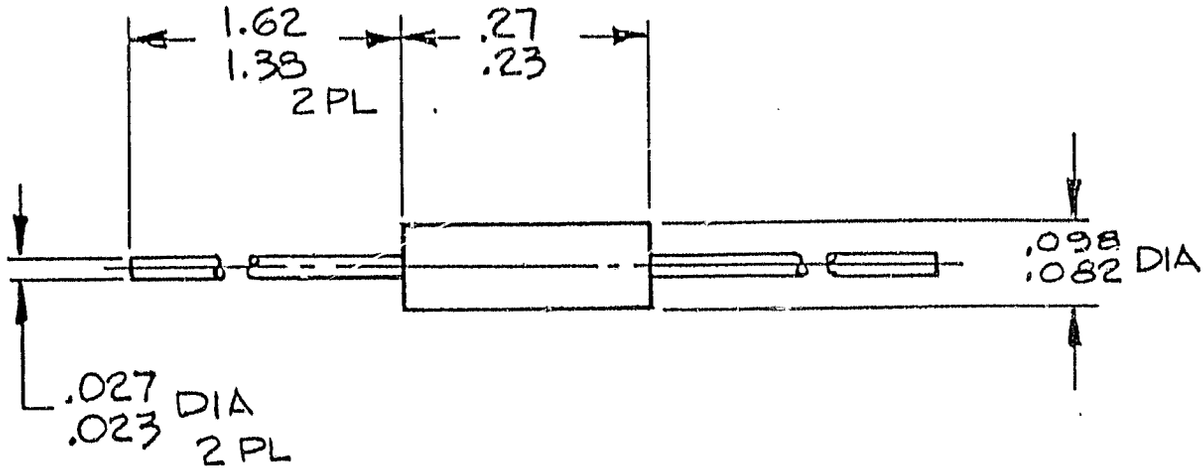

5330 DEBBIE LANE
SANTA BARBARA, CALIF 93111
964-8676

ELCAM, INC.

Contractors License No 290399

TOLERANCES	REVISIONS			PART NUMBER AP 35		
UNLESS OTHERWISE SPECIFIED DECIMAL XX ± 0.0 XXX ± 0.0 ANGULAR ± DRAFT	NO	DATE	BY	PART NAME RESISTOR, 10K		
	1			DRAWN BY THOMSON	SCALE —	MATERIAL SEE NOTE 1
	2			CHK D	DATE 4 DEC 76	DRAWING NO ESP-A35
	3			TRACED	APP D	
	4					
	5					

NOTES:

1. RESISTOR, FIXED
   390 OHMS, ± 10%, .25 WATT
   TYPE CB

2. CONTINUOUS AMBIENT TEMP
   70°C WITHOUT POWER DERATING

3. SUGGESTED SOURCE(S) OF SUPPLY:
   ALLEN BRADLEY CO.
   FSCM NO. 01121
   OR EQUIV

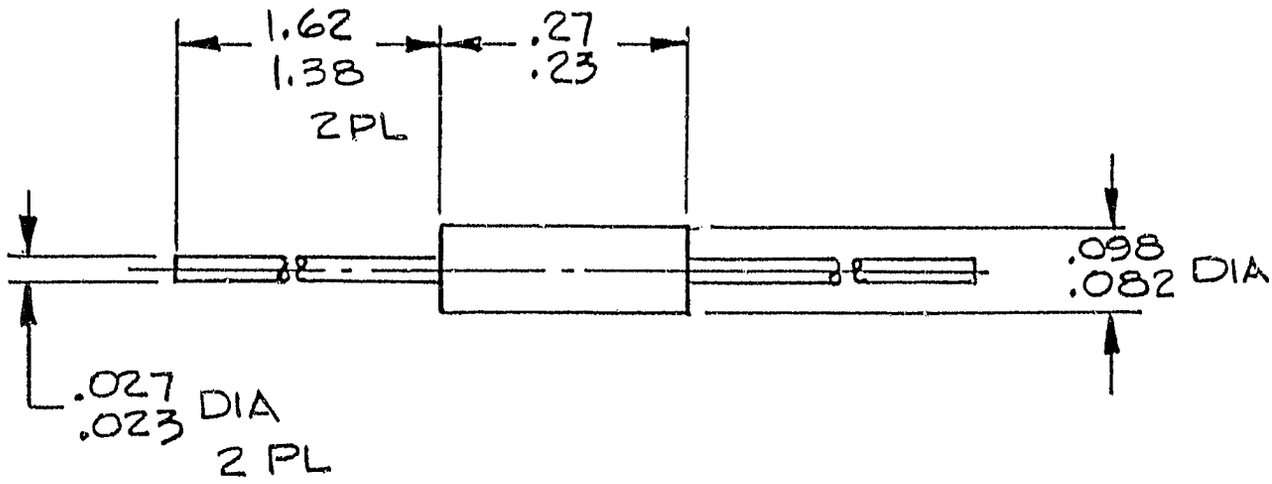

5330 DEBBIE LANE
SANTA BARBARA, CALIF. 93111
964-8676

ELCAM, INC.

Contractors License No 290399

TOLERANCES	REVISIONS					
UNLESS OTHERWISE SPECIFIED DECIMAL .XX ± 0.0 .XXX ± 0.0 ANGULAR ± DRAFT	NO	DATE	BY	PART NUMBER A 36		
	1			PART NAME RESISTOR, 390 Ω		
	2					
	3			DRAWN BY THOMSON	SCALE NONE	MATERIAL SEE NOTE 1
	4			CHK'D	DATE 4 DEC 76	DRAWING NO ESP-A36
	5			TRACED	APP'D	

NOTES:

1. RESISTOR, FIXED
   100K, ±1%, .25 WATT
   TYPE CERMET FILM

2. CONTINUOUS AMBIENT TEMP
   70°C WITHOUT POWER DERATING

3. SUGGESTED SOURCE(S) OF SUPPLY:
   ALLEN BRADLEY CO.
   FSCM NO. 01121
   OR EQUIV

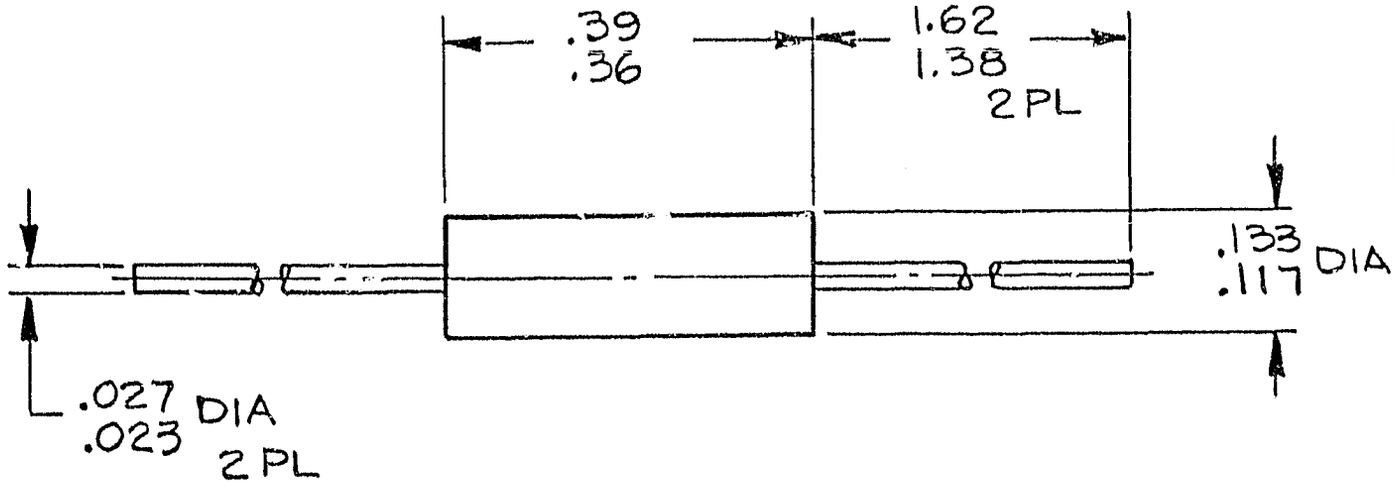

5330 DEBBIE LANE
SANTA BARBARA, CALIF 93111
964-8676

ELCAM, INC.

Contractors License No 290399

TOLERANCES	REVISIONS			PART NUMBER	
UNLESS OTHERWISE SPECIFIED DECIMAL XX ± 0.0 — .XX ± 0.0 — ANGULAR ± DRAFT	NO	DATE	BY	AP 37	
				PART NAME RESISTOR, 100K	
				DRAWN BY THOMSON	SCALE NONE	MATERIAL SEE NOTE 1
				CHK'D	DATE 2 DEC 76	DRAWING NO ESP-A37
				TRACED	APP'D	

NOTES:

1. RESISTOR, FIXED
   2.2K, ±5%, .50 WATT
   TYPE, EB

2. CONTINUOUS AMBIENT TEMP
   70°C WITHOUT POWER DERATING

3. SUGGESTED SOURCE(S) OF SUPPLY:
   ALLEN BRADLEY CO.
   FSCM NO. 01121
   OR EQUIV

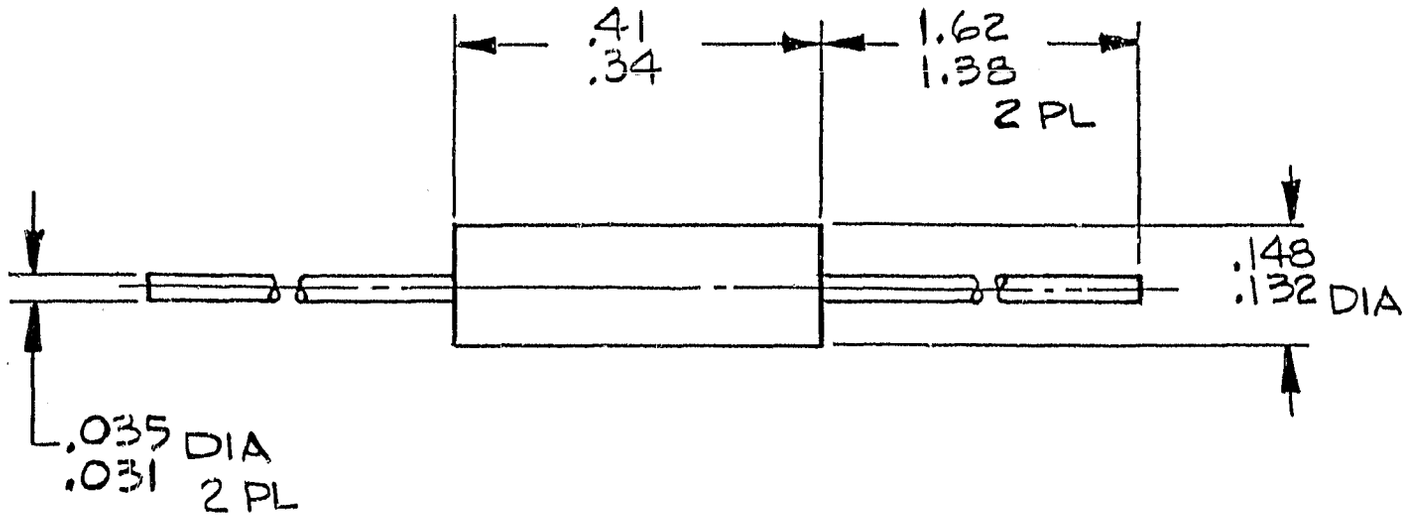

5330 DEBBIE LANE
SANTA BARBARA, CALIF. 93111
964-8676

ELCAM, INC.

Contractors License No. 290399

TOLERANCES	REVISIONS			PART NUMBER		
UNLESS OTHERWISE SPECIFIED DECIMAL .XX ± 0.0 .XXX 0.0 ANGULAR ± DRAFT	NO	DATE	BY	AP 38		
	1			PART NAME RESISTOR, 2.2K		
	2					
	3			DRAWN BY THOMSON	SCALE NONE	MATERIAL SEE NOTE 1
	4			CHK'D	DATE 4 DEC 76	DRAWING NO ESP-A38
	5			TRACED	APP'D	

NOTES:

1. RESISTOR, FIXED
   680 OHMS, ±10%, .50 WATT
   TYPE, EB

2. CONTINUOUS AMBIENT TEMP
   70°C WITHOUT POWER DERATING

3. SUGGESTED SOURCE(S) OF SUPPLY:
   ALLEN BRADLEY CO.
   FSCM NO. 01121

   OR EQUIV

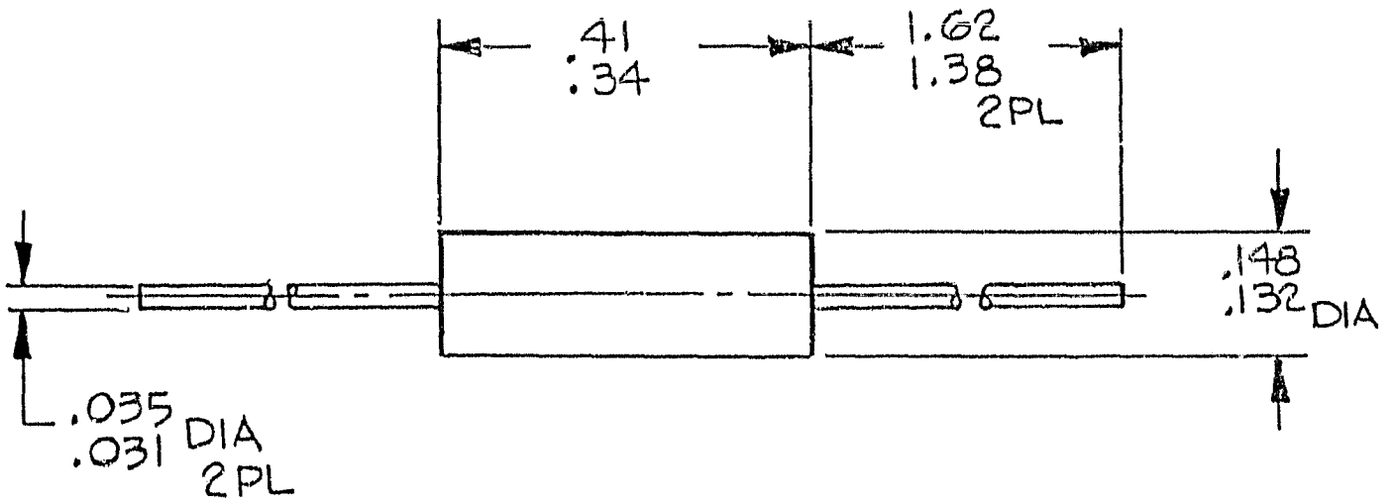

5330 DEBBIE LANE
SANTA BARBARA, CALIF. 93111
964-8676

ELCOM, INC.

Contractors License No 290399

TOLERANCES	REVISIONS			PART NUMBER AP 39		
UNLESS OTHERWISE SPECIFIED DECIMAL XX ± .00 — XXX ± .00 — ANGULAR ± DRAFT	NO	DATE	BY	PART NAME RESISTOR, 680 Ω		
	1			DRAWN BY THOMSON	SCALE NONE	MATERIAL SEE NOTE 1
	2			CHK'D	DATE 4 DEC 76	DRAWING NO ESP-A39
	3			TRACED	APP'D	
	4					
	5					

87

NOTES:

1. RESISTOR, FIXED
   4.75K, ±1%, .25 WATT
   TYPE, CERMET FILM

2. CONTINUOUS AMBIENT TEMP
   70°C WITHOUT POWER DERATING

3. SUGGESTED SOURCE(S) OF SUPPLY:
   ALLEN BRADLEY CO.
   FSCM NO. 01121
   OR EQUIV

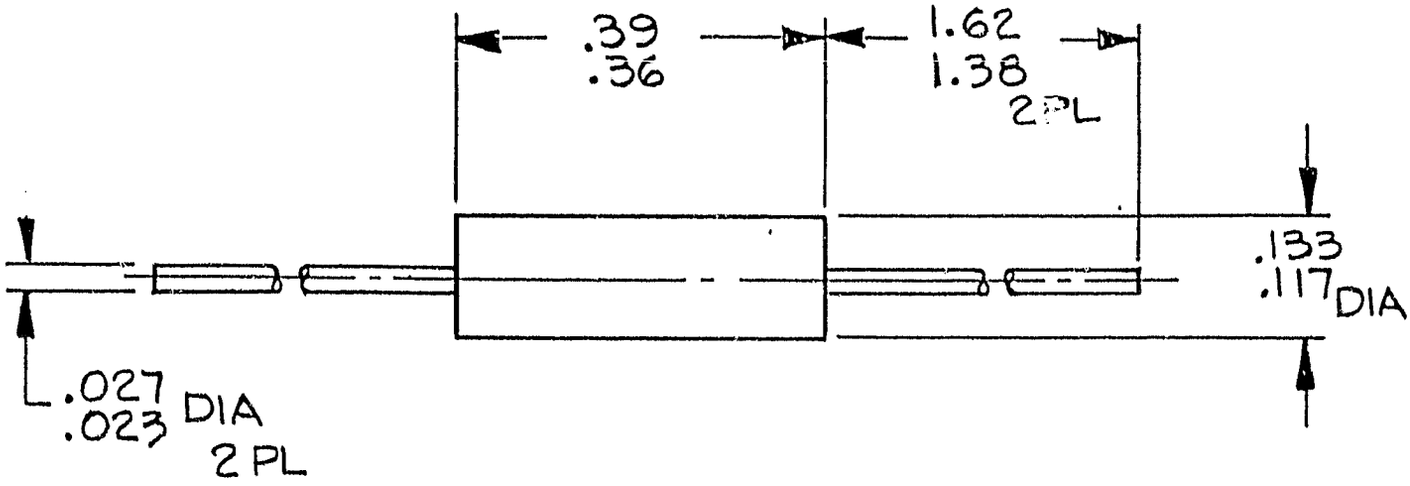

5330 DEBBIE LANE
SANTA BARBARA, CALIF. 93111
964-8676

ELCAM, INC.

Contractors License No 290399

TOLERANCES	REVISIONS			PART NUMBER AP 41		
UNLESS OTHERWISE SPECIFIED DECIMAL XX ± 0.0 — XXX ± 0.0 — ANGULAR ± DRAFT	NO	DATE	BY	PARS NAME RESISTOR, 4.75K		
	1			DRAWN BY THOMSON	SCALE NONE	MATERIAL SEE NOTE 1
	2			CHK D	DATE 4 DEC 76	DRAWING NO ESP-A41
	3			TRA ED	APP D	
	4					
	5					

NOTES:

1. RESISTOR, FIXED
   4.64K ±1%, .25 WATT
   TYPE, CERMET FILM

2. CONTINUOUS AMBIENT TEMP
   70°C WITHOUT POWER DERATING

3. SUGGESTED SOURCE(S) OF SUPPLY:
   ALLEN BRADLEY CO.
   FSCM NO. 01121
   OR EQUIV

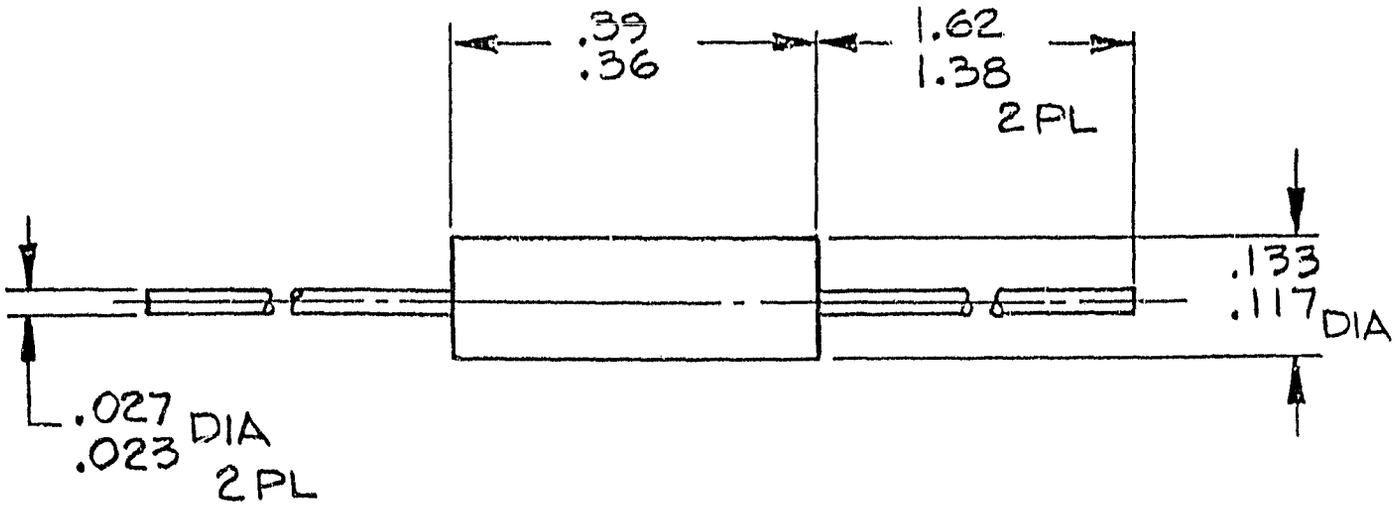

5330 DEBBIE LANE
SANTA BARBARA, CALIF 93111
964-8676

ELCAM, INC.

Contractors License No 290399

TOLERANCES	REVISIONS			PART NUMBER		
UNLESS OTHERWISE SPECIFIED DECIMAL XX ± 0.0 XXX ± 0.0 ANGULAR ± DRAFT	NO	DATE	BY	AP 42		
	1	1/12/77	GC	PART NAME RESISTOR, 4.64K		
	2			DRAWN BY THOMSON	SCALE NONE	MATERIAL SEE NOTE 1
	3			CHK D	DATE 4 DEC 76	DRAWING NO ESP-A42
	4			TRACED	APP D	
	5					

NOTES:

1. RESISTOR, FIXED
   160K, ±5% .25 WATT.

2. CONTINUOUS AMBIENT TEMP
   70°C WITHOUT POWER DERATING

3. SUGGESTED SOURCE(S) OF SUPPLY:
   ALLEN BRADLEY CO.
   FSCM NO. 01121
   OR EQUIV

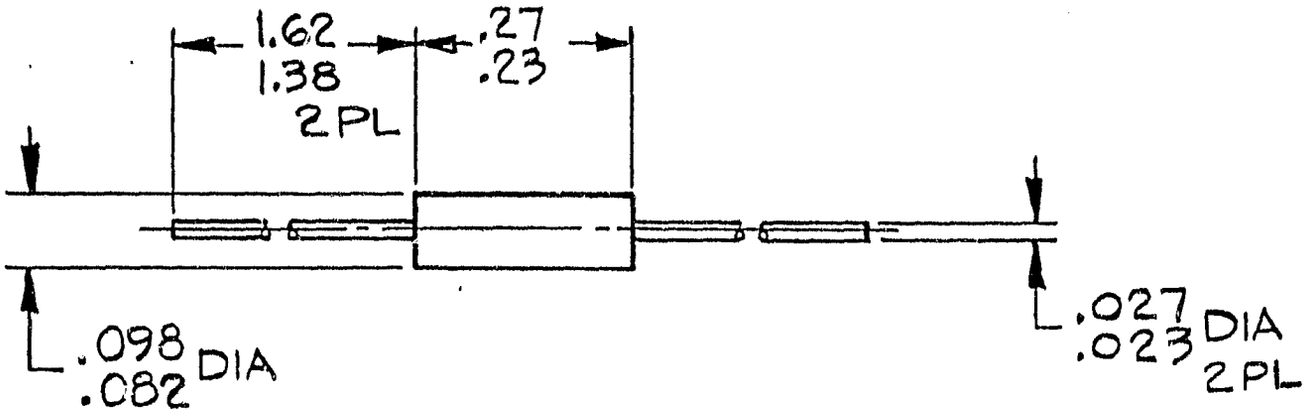

5330 DEBBIE LANE
SANTA BARBARA, CALIF. 93111
964-8676

ELCAM, INC.

Contractors License No 290399

TOLERANCES	REVISIONS			PART NUMBER		
UNLESS OTHERWISE SPECIFIED DECIMAL .XX ± 0.0 — .XXX ± 0.0 — ANGULAR ± DRAFT	NO	DATE	BY	AP 44		
	1			PART NAME RESISTOR, 160K		
	2					
	3			DRAWN BY THOMSON	SCALE NONE	MATERIAL SEE NOTE 1
	4			CHK D	DATE 4 DEC76	DRAWING NO ESP-A44
	5			TRACED	APP D	

NOTES:

1. POTENTIOMETER
   TOP ADJUST
   10K, ±20%, .25 WATT
   PART NO. 3389P-1-103

2. SUGGESTED SOURCE(S) OF SUPPLY:
   BOURNS INC. TRIMPOT
   FSCM NO. 32997
   OR EQUIV

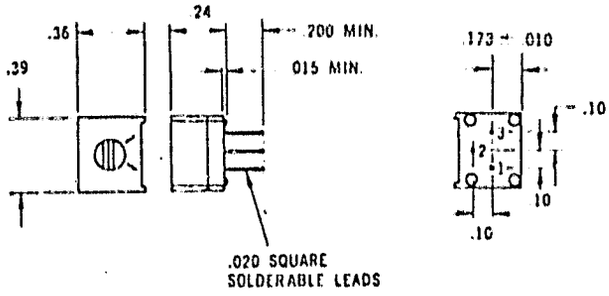

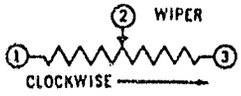

5330 DEBBIE LANE
SANTA BARBARA, CALIF. 93111
964-8676

ELCAM, INC.

Contractors License No 290399

TOLERANCES	REVISIONS			PART NUMBER		
UNLESS OTHERWISE SPECIFIED DECIMAL XX ± .001 .XXX ± .0005 ANGULAR ± DRAFT	NO	DATE	BY	AP 45		
				PART NAME POTENTIOMETER		
				DRAWN BY THOMSON	SCALE NONE	MATERIAL SEE NOTE 1
				CHK'D	DATE 4 DEC 76	DRAWING NO ESP-A45
				TRACED	APP'D	

NOTES:

1. TERMINAL, SQUARE BARREL
   BRASS, TIN PLATED
   PART NO. 4484

2. SUGGESTED SOURCE(S) OF SUPPLY:
   NATIONAL TEL-TRONICS DIV,
   EASTERN AIR DEVICES INC
   F3CM NO. 91967
   OR EQUIV

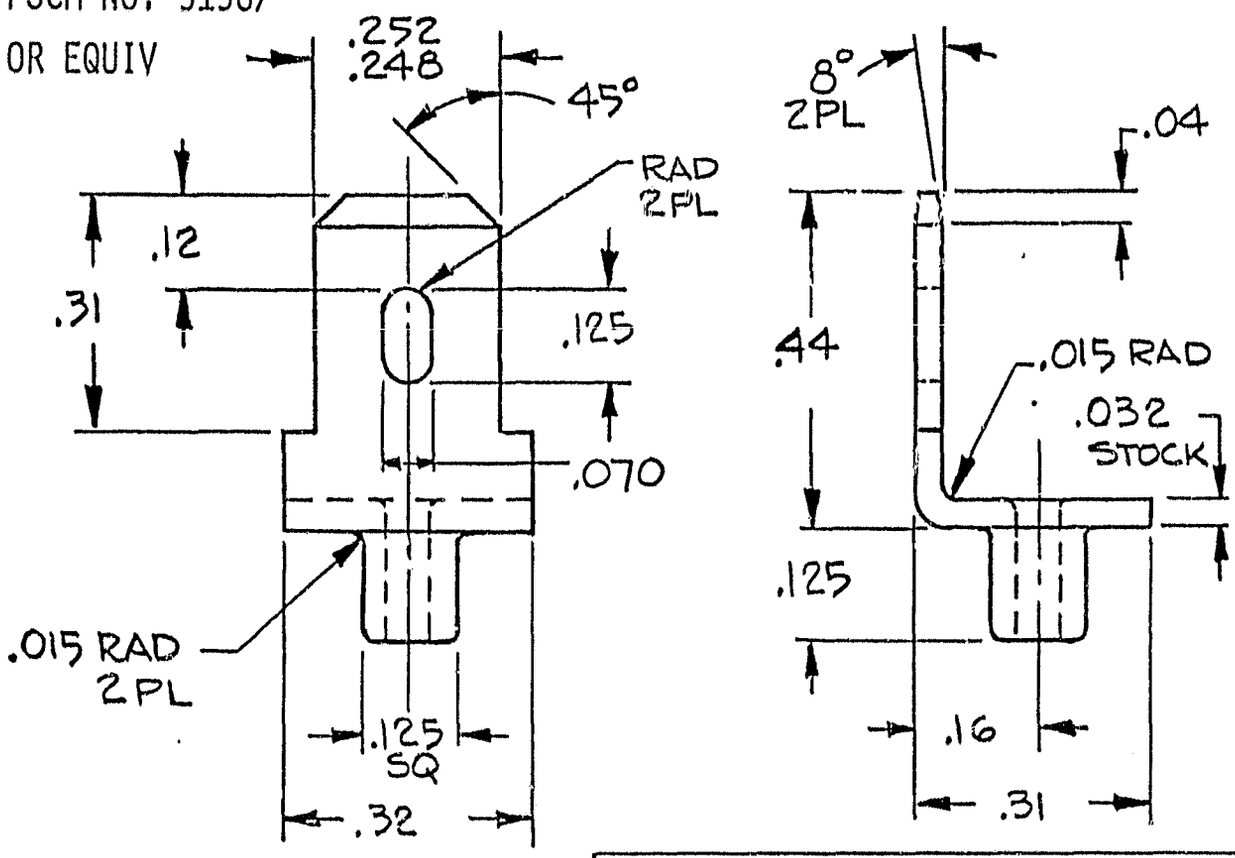

5330 DEBBIE LANE
SANTA BARBARA, CALIF. 93111
984-8676

ELCAM, INC.

Contractors License No 290399

TOLERANCES	REVISIONS			PART NUMBER		
UNLESS OTHERWISE SPECIFIED DECIMAL XX ± 0.01 XXX ± 0.005 ANGULAR ± 0°30' DRAFT	NO	DATE	BY	AP 46		
	1			PART NAME TERMINAL, SQUARE BARREL		
	2					
	3			DRAWN THOMSON	SCALE 4/1	MATERIAL SEE NOTE 1
	4			CHK'D	DATE 4 DEC. 76	DRAWING NO ESP-A46
	5			TRACED	APP'D	

NOTES:

1. MATERIAL

STEEL, ZINC CHROMATE
FINISH. CADMIUM OPTIONAL

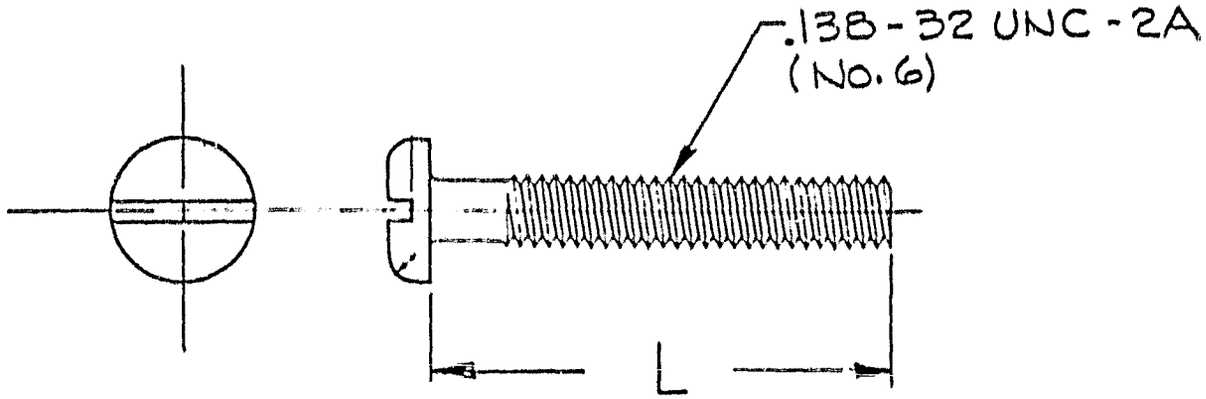

TABLE I

PART NO.	L
AP48-001	.25
AP48-002	.32
AP48-003	.38
AP48-004	.44

5330 DEBBIE LANE
SANTA BARBARA, CALIF 93111
964-8676

ELCAM, INC.

Contractors License No 290399

TOLERANCES	REVISIONS			
UNLESS OTHERWISE SPECIFIED DECIMAL XX ± 00 — XXX ± 00 — ANGULAR ± DRAFT	NO	DATE	BY	PART NUMBER AP48
	1			PART NAME SCREW, PAN HD
	2			
	3			DRAWN BY THOMSON / SCALE NONE / MATERIAL SEE NOTE 1
	4			CHK'D / DATE 4 DEC 76 / DRAWING NO ESP-48
93	5			TRACED / APP'D

NOTES:

1. MATERIAL:
   STEEL, ZINC CHROMATE
   PLATED. CADMIUM OPTIONAL

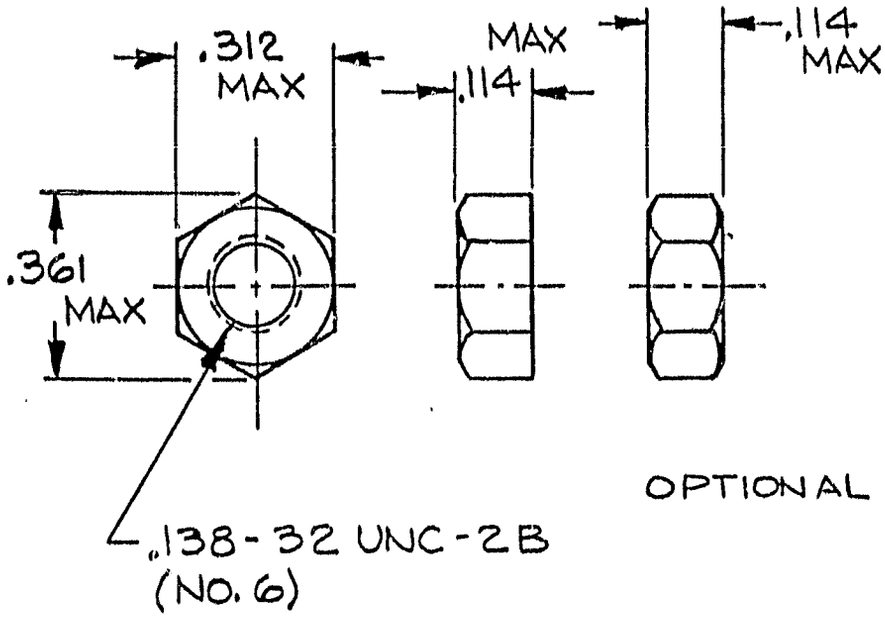

6330 DEBBIE LANE
SANTA BARBARA, CALIF. 93111
964-8676

ELCAM, INC.

Contractors License No 290399

TOLERANCES	REVISIONS					
UNLESS OTHERWISE SPECIFIED DECIMAL XX ± 0.0 — XXX ± 0.0 — ANGULAR ± DRAFT	NO	DATE	BY	PART NUMBER AP51		
	1			PART NAME NUT, HEX		
	2					
	3			DRAWN BY THOMSON	SCALE NONE	MATERIAL SEE NOTE 1
	4			CHK'D	DATE 5 DEC 76	DRAWING NO ESP-A51
	5			TRACED	APP'D	

NOTES:

1. LM3911 TEMPERATURE
   CONTROLLER IC
   SINGLE MONOLITHIC CHIP
   OPER TEMP RANGE – 25°C-+85°C

2. SUGGESTED SOURCE(S) OF SUPPLY:
   NATIONAL SEMICOND CORP
   FSCM NO.27014
   OR EQUIV.

5330 DEBBIE LANE
SANTA BARBARA, CALIF 93111
964-8676

ELCAM, INC.

Contractors License No 290399

TOLERANCES	REVISIONS				
UNLESS OTHERWISE SPECIFIED DECIMAL XX ± 0.0 XXX ± 0.0 ANGULAR ± DRAFT	NO	DATE	BY	PART NUMBER: AP 52	
	1			PART NAME: LM3911 TEMP CONT IC	
	2				
	3			DRAWN BY: THOMSON	SCALE: NOTE	MATERIAL: SEE NOTE 1
	4			CHK'D	DATE: 30 NOV 76	DRAWING NO: ESP-A52
95	5			TRACED	APP'D	

NOTES:

1. COMPOUND MUST BE FLUSH TO .01 BELOW SHELL SURFACE.

2. ASSEMBLE COMPONENTS PER ENGINEERING SPEC.

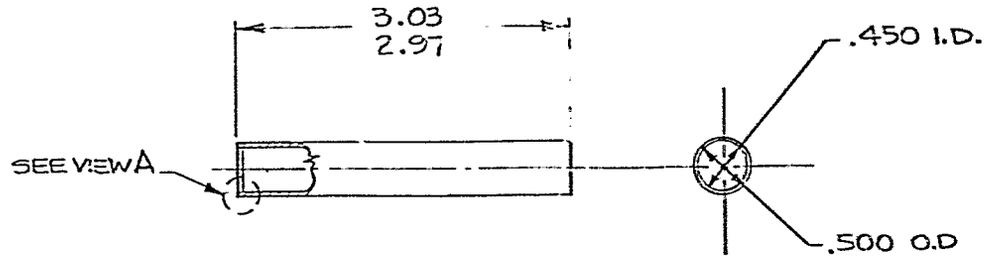

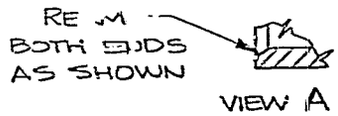

MATERIAL:
COPPER TUBE .50 DIA
TYPE M

CARTRIDGE SHELL AP53-001
SCALE: FULL

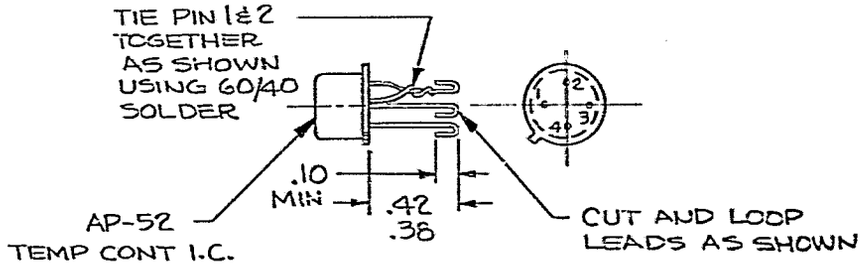

MODIFIED LM3911 TEMP CONT I.C
AP53-002
SCALE: 2/1

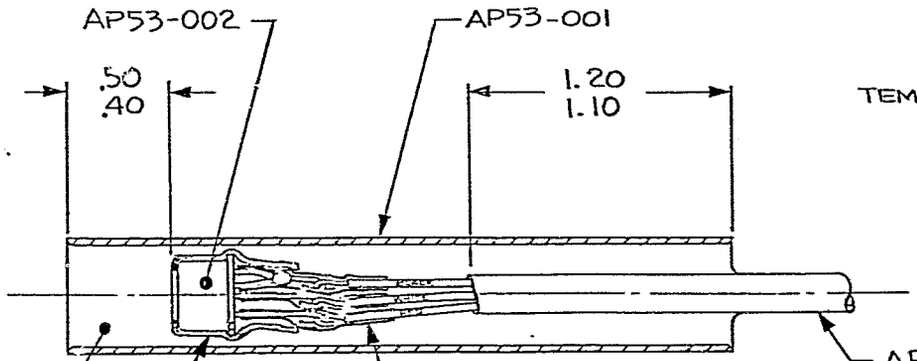

SENSOR CARTRIDGE

ORIGINAL PAGE IS OF POOR QUALITY

ELCAM, INC.

PART NUMBER	AP53
PART NAME	SENSOR CARTRIDGE SUB-ASSY
SCALE	2/1
SIZE	SEE F/D
DRAWING NO	ESP-A53

NOTES:

1. RESISTOR, FIXED
   .25 WATT, ±10%
   TYPE, CB

2. AT ASSEMBLY - SELECT ONE FROM THE FOLLOWING VALUES IN TABLE I.

3. CALIBRATE SENSOR ASSEMBLY PER ENGINEERING SPEC.

4. SUGGESTED SOURCE(S) OF SUPPLY:
   ALLEN BRADLEY CO.
   FSCM NO. 01121
   OR EQUIV

TABLE I
(SEE NOTE 2)

PART NO.	VALUE IN OHMS
AP 54 - 001	2.7
AP 54 - 002	3.0
AP 54 - 003	3.3
AP 54 - 004	3.9
AP 54 - 005	4.7
AP 54 - 006	5.1
AP 54 - 007	5.6
AP 54 - 008	6.8
AP 54 - 009	8.2
AP 54 - 010	9.1
AP 54 - 011	10
AP 54 - 012	15
AP 54 - 013	20

TABLE I CONTINUED

PART NO.	VALUE IN OHMS
AP 54 - 014	22
AP 54 - 015	27
AP 54 - 016	30
AP 54 - 017	33
AP 54 - 018	39
AP 54 - 019	47
AP 54 - 020	51
AP 54 - 021	56
AP 54 - 022	68
AP 54 - 023	75
AP 54 - 024	82
AP 54 - 025	100
AP 54 - 026	110
AP 54 - 027	120
AP 54 - 028	150

5330 DEBBIE LANE
SANTA BARBARA, CALIF. 93111
964-8676

ELCAM, INC.

Contractors License No. 290399

TOLERANCES	REVISIONS			PART NUMBER	
UNLESS OTHERWISE SPECIFIED DECIMAL XX ± 00 — XXX ± 00 — ANGULAR ± DRAFT	NO	DATE	BY	AP 54	
				PART NAME RESISTOR, CALIBRATION	
				DRAWN BY THOMSON	SCALE NONE	MATERIAL SEE NOTE 1
				CHK'D	DATE 15 DEC 76	DRAWING NO ESP-A54
97				TRACED	APP'D	

NOTES:

1. STRIP ENDS OF LEADS .25-.30 AND SOLDER TO TERMINALS USING 60-40 SOLDER.

2. AFTER ASSEMBLE CHECK CABLE PER ENGINEERING SPEC.

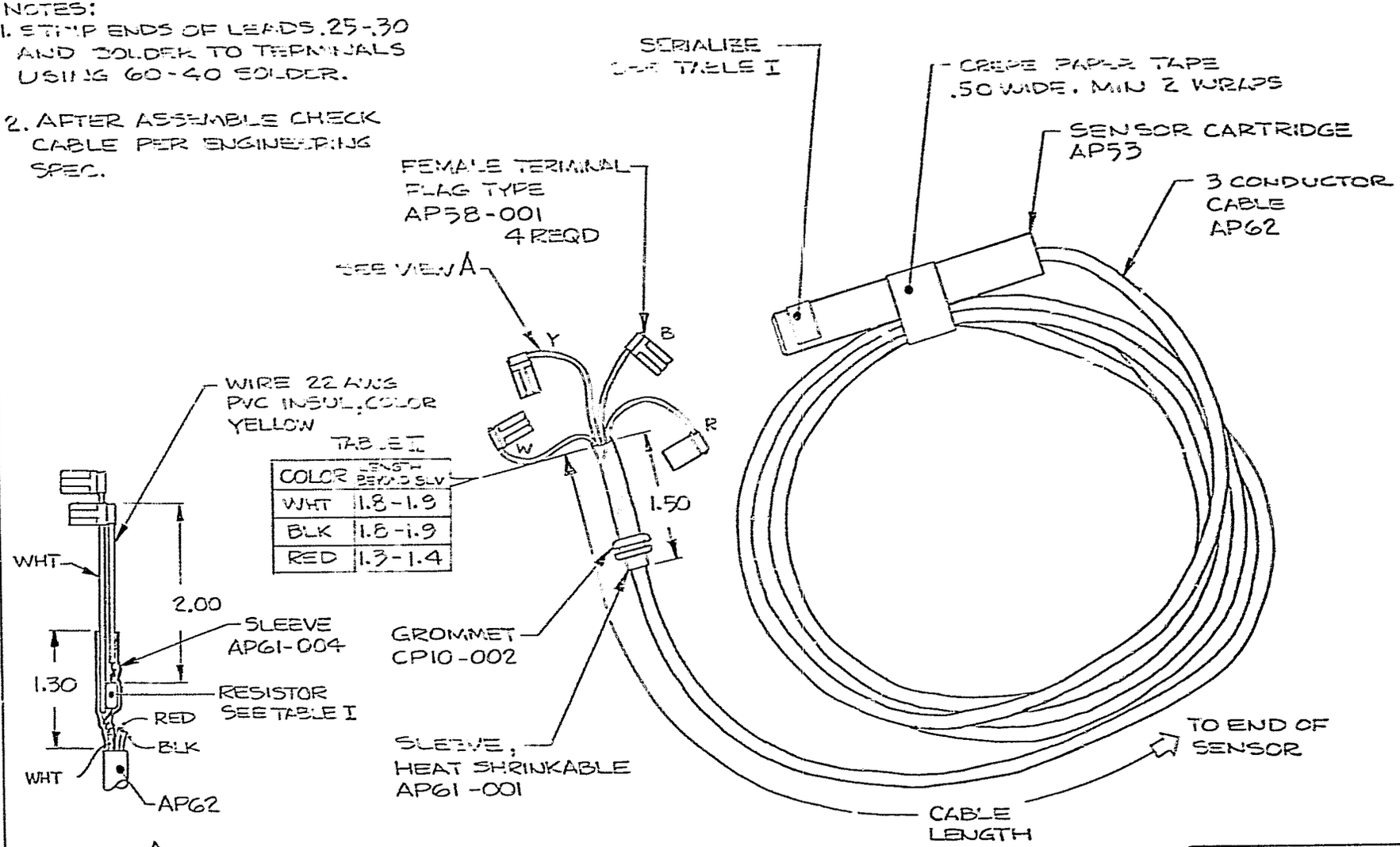

TABLE II

COLOR	LENGTH BEYOND SLV
WHT	1.8-1.9
BLK	1.8-1.9
RED	1.3-1.4

VIEW A

TABLE I

PART NO.	CABLE LENGTH	MARK IDENT LABEL	REMARKS
AP57-001	120"-124"	DAY-MONTH-YEAR ie: 211176-SXX	SELECT TRIM RES AP54 TO CALIBRATE PER ENGR SPEC

ELCAM, INC.

PART NUMBER	AP57
PART NAME	SENSOR CABLE ASSY
SCALE	FULL SEE F/D
	22 NOV 76 ESP-A57

NOTES:

1. MATERIAL:
   FLAG TERMINAL
   FEMALE QUICK SLIDE
   NON- INSULATED
   PART NO. SEE TABLE I

2. VENDOR(S):
   MINNESOTA MINING & MFG CO. (3M)
   FSCM 75037

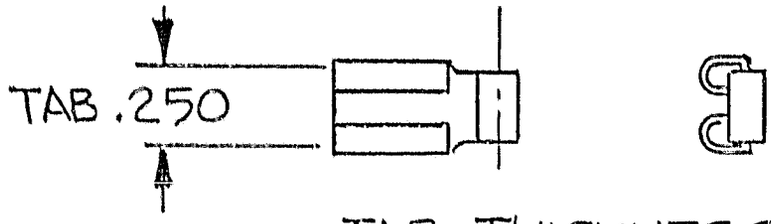

TAB THICKNESS .030-.032

TABLE I

PART NO.	WIRE RANGE	3M CAT NO.		
AP58-001	22-18	B32-001		

5330 DEBBIE LANE
SANTA BARBARA CALIF 93111
964-8676

ELCAM, INC.

Contractors License No 290399

TOLERANCES	REVISIONS			PART NUMBER AP58		
UNLESS OTHERWISE SPECIFIED DECIMAL XX ± .00 — XXX ± .00 — ANGULAR ± DRAFT VENDOR'S TOL APPLY	NO	DATE	BY	PART NAME FLAG TERMINAL		
				DRAWN BY THOMSON CHK'D TRACED	SCALE NONE DATE 29 NOV 76 APP'D	MATERIAL SEE NOTE 1 DRAWING NO ESP-A58

NOTES:

1. MATERIAL:
   STEEL, CARBON

2. PROTECTIVE FINISH:
   ZINC PLATE
   .0002 MIN THICKNESS
   CLEAR CHROMATE
   SPEC QQ-Z-325

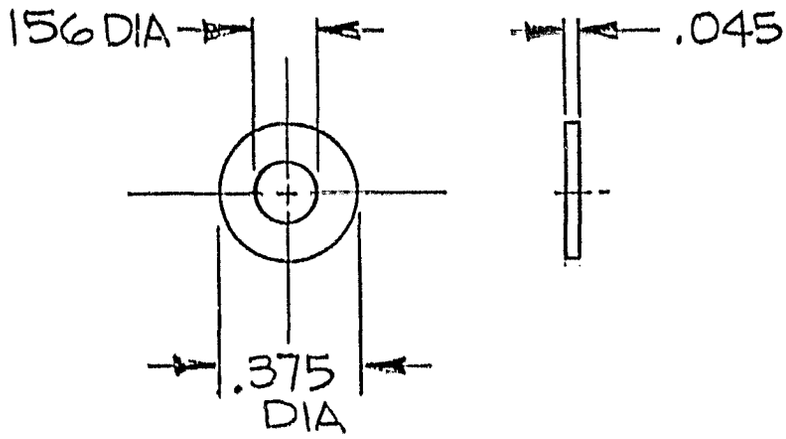

5330 DEBBIE LANE
SANTA BARBARA, CALIF. 93111
964-8676

ELCAM, INC.

Contractors License No 290399

TOLERANCES	REVISIONS			PART NUMBER		
UNLESS OTHERWISE SPECIFIED DECIMAL .XX ± 0.0 — .XXX ± 0.0 — ANGU. \R ± DRAFT VENDOR'S TOL APPLY	NO	DATE	BY	AP60		
				PART NAME WASHER, FLAT		
	1			DRAWN BY THOMSON	SCALE	MATERIAL SEE NOTE 1
	2			CHK'D	DATE 6 DEC 76	DRAWING NO ESP-A60
	3			TRACED	APP'D	
	4					
	5					

NOTES:

1. MATERIAL:
   INSULATION, HEAT-SHRINKABLE
   POLYVINYL CHLORIDE (PVC)
   COLOR, SEE TABLE I
   SIZE, SEE TABLE I

2. VENDOR:
   PORT PLASTICS INC.
   8037 E. SLAUSON AVE
   MONTEBELLO, CA. 90640

TABLE I

PART NO.	VENDOR NO.	I D	WALL	COLOR
AP61-001	FP301-.093	.093	.020	CLEAR
AP61-002	FP301-.187	.188	.025	CLEAR
AP61-003	FP301-.375	.375	.030	CLEAR
AP61-004	FP301-.093	.093	.020	BLACK
AP61-005	FP301-		.	

NOTE: RECOVERY I.D. AFTER SHRINKAGE IS APPROX $\frac{1}{2}$ OF I D GIVEN.

5330 DEBDIE LANE
SANTA BARBARA, CALIF 93111
964-8676

ELEAM, INC.

Contractors License No 290399

TOLERANCES	REVISIONS			PART NUMBER AP61		
UNLESS OTHERWISE SPECIFIED DECIMAL XX ± .00 — XXX ± .00 — ANGULAR ± DRAFT VENDOR'S TOL APPLY	NO	DATE	BY	PART NAME INSULATION, SHRINKABLE		
	1			DRAWN BY THOMSON	SCALE NONE	MATERIAL SEE NOTE 1
	2			CHK'D	DATE 27 NOV 76	DRAWING NO ESP-A61
	3			TRACED	APP'D	
	4					
	5					

NOTES:

1. MATERIAL:
   CABLE, UNSHIELDED MULTI-CONDUCTOR.
   THREE CNDCT: WHT, BLK, & RED - PVC INSULATION.
   22 AWG, STRANDED 7/30 NOM OD .145 OVER JKT.
   JACKET INSULATION - GRAY VINYL.

2. VENDOR(S):
   STANDARD WIRE & CABLE
   FSCM NO. 04946

   ALPHA WIRE
   FSCM NO. 92194

5330 DEBBIE LANE
SANTA BARBARA, CALIF. 93111
964-0676

ELCAM, INC.

Contractors License No 290399

TOLERANCES	REVISIONS					
UNLESS OTHERWISE SPECIFIED DECIMAL XX ± 00 — XXX ± 00 — ANGULAR ± DRAFT VENDOR'S TOL APPLY	NO	DATE	BY	PART NUMBER AP62		
				PART NAME CABLE		
				DRAWN BY THOMSON	SCALE NONE	MATERIAL SEE NOTE 1
				CHK'D	DATE 27 NOV 76	DRAWING NO ESP-A62
				TRACED	APP'D	

NOTES:

1. MATERIAL:

A. STYCAST 2741LV IS AN EPOXIDE CASTING RESIN AND SEALING COMPOUND OF CONTROLLED FLEXIBILITY, IT IS USED FOR ELECTRONIC EMBEDMENT AND IN SEALING OR CEMENTING OF METALS, CERAMICS AND PLASTICS. STYCAST 2741LV IS SUPPLIED AS A FREE FLOWING LIQUID. IT IS USED IN CONJUNCTION WITH CATALYST 15, ALSO A LIQUID. COLOR IS BLACK.

STYCAST 2741LV CAN BE CURED AT ROOM TEMPERATURE, OR AT ELEVATED TEMPERATURE IN A SHORT PERIOD OF TIME. POT LIFE OF THE CATALYZED RESIN IS AT LEAST TWO HOURS. THE FLEXIBILITY AND HARDNESS OF CURED STYCAST 2741LV IS CONTROLLED BY THE PROPORTION OF CATALYST 15LV WHICH IS USED.

FOR A FLEXIBLE MATERIAL (SHORE DUROMETER HARDNESS 30) USE:

100 PARTS STYCAST 2741LV
150 PARTS CATALYST 15LV

FOR A SEM-RIGID MATERIAL (SHORE DUROMETER HARDNESS 50) USE:

100 PARTS STYCAST 2741LV
100 PARTS CATALYST 15LV

FOR A RIGID MATERIAL USE;

100 PARTS STYCAST 2741LV
50 PARTS CATALYST 15LV

B. CATALYST 15LV IS A FLEXIBLE HARDNER. COLOR BLACK. TEMPERATURES ABOVE 250° F SHOULD BE ORDINARILY AVOIDED.

2. SOURCE(S) OF SUPPLY:

EMERSON & CUMING INC

FSCM NO. 04522

5533 DEBBIE LANE
SANTA BARBARA CALIF 93111
964 8676

ELCAM, INC.

Contractors License No 290309

ORIGINAL PAGE IS OF POOR QUALITY

TOLERANCES	REVISIONS			PART NUMBER	
UNLESS OTHERWISE SPECIFIED DECIMAL XX ± 0.0 — XXX ± 0.0 — ANGULAR ± DRAFT	NO	DATE	BY	AP 63	
				PART NAME CASTING COMPOUND, EPOXY	
				DRAWN BY THOMSON / CHK'D / TRACED	SCALE NONE / DATE Dec 76 / APP'D
				MATERIAL SEE NOTE 1	DRAWING NO ESP-A63

NOTES:

1. MATERIAL:
   PHOTOGRAPHIC PAPER
   PRESSURE SENSITIVE ADHESIVE
   BACKED WITH PROTECTIVE BACKING
   PAPER.

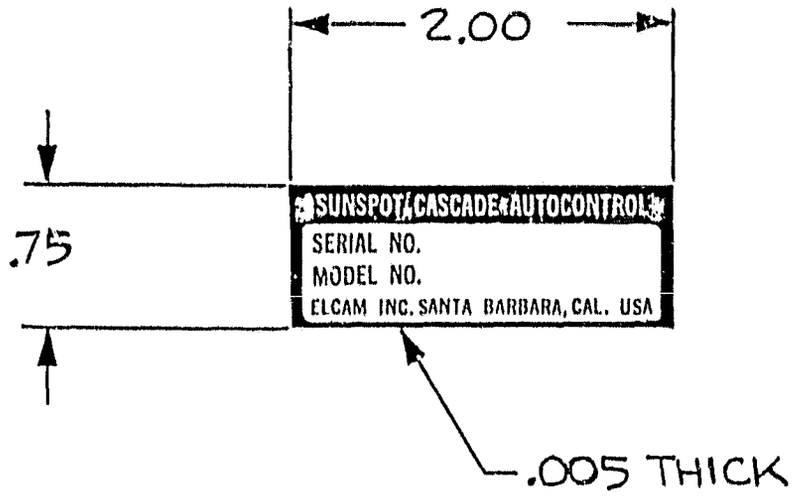

5330 DEBBIE LANE
SANTA BARBARA, CALIF 93111
964-8676

ELCAM, INC.

Contractors License No 290399

TOLERANCES	REVISIONS			PART NUMBER	
UNLESS OTHERWISE SPECIFIED DECIMAL XX ± .02 XXX ± .00 ANGULAR ± DRAFT	NO	DATE	BY	AP 64	
	1			PART NAME LABEL, CIRCUIT CARD	
	2				
	3			DRAWN BY THOMSON	SCALE FULL	MATERIAL SEE NOTE 1
	4			CHK D	DATE 5 DEC 76	DRAWING NO ESP- A64
	5			TRACED	APP D	

NOTES:

1. MATERIAL:
   PHOTOGRAPHIC PAPER
   PRESSURE SENSITIVE ADHESIVE
   BACKED WITH PROTECTIVE BACKING
   PAPER.

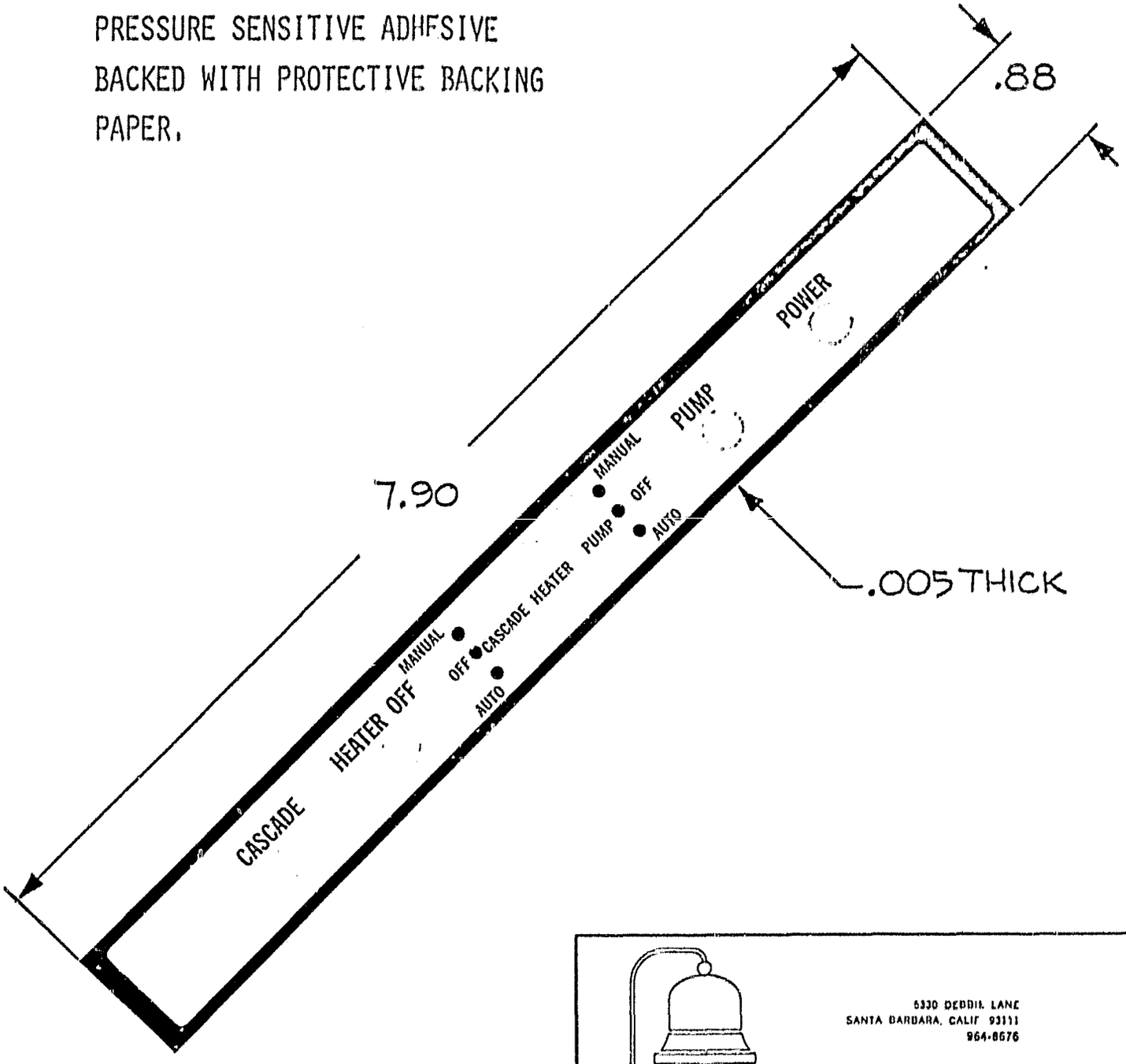

5330 DEBDIL LANE
SANTA BARBARA, CALIF 93111
964-8676

ELCAM, INC.

Contractors License No 290399

TOLERANCES	REVISIONS			PART NUMBER AP 65		
UNLESS OTHERWISE SPECIFIED DECIMAL XX ± 0.02 XXX ± 0.01 ANGULAR ± DRAFT	NO	DATE	BY	PART NAME LABEL, CONTROL		
	1					
	2					
	3			DRAWN BY THOMSON	SCALE FULL	MATERIAL SEE NOTE 1
	4			CHK D	DATE 5 DEC 76	DRAWING NO ESP-A65
	5			TRACED	APP D	

NOTES:

1. MATERIAL:
   LOW CARBON STEEL
   COLD ROLLED COMMERCIAL
   QUALITY NO. 1, FULL HARD TEMPER

2. PROTECTIVE FINISH:
   CADMIUM PLATE.
   ZINC CHROMATE OPTIONAL.

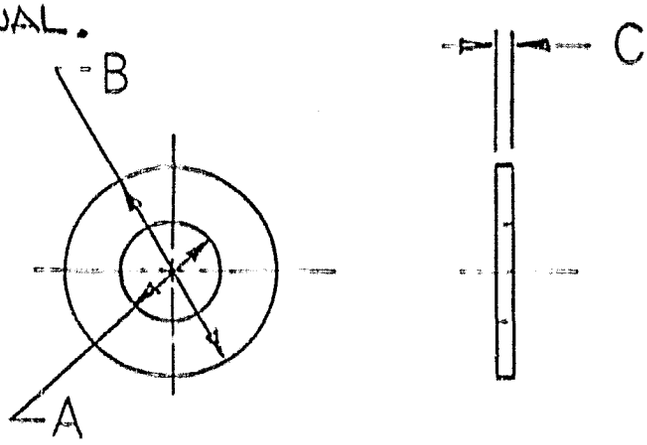

TABLE I

PART NO.	SCR SIZE	A	B	C
AP66-001	4	.120-.125	.245-.250	.017-.028
AP66-002	6	.151-.164	.307-.320	.027-.048
AP66-003	8	.183-.196	.370-.390	.036-.065

5330 DEBBIE LANE
SANTA BARBARA, CALIF 93111
964-8676

ELCAM, INC.

Contractors License No 290299

TOLERANCES	REVISIONS			PART NUMBER AP66		
UNLESS OTHERWISE SPECIFIED DECIMAL XX ± 00 — XXX ± 00 — ANGULAR ± DRAFT	NO	DATE	BY	PART NAME WASHER, FLAT		
	1			DRAWN BY THOMSON	SCALE NONE	MATERIAL SEE NOTE 1
	2			CHK'D	DATE 14 DEC 76	DRAWING NO ESP-A66
	3			TRACED	APP'D	
	4					
	5					

NOTES:

1. MATERIAL:
   STEEL, CARBON
   C1060 TO C1080
   ROCKWELL "C" 45-53.

2. PROTECTIVE FINISH:
   CADMIUM PLATE.

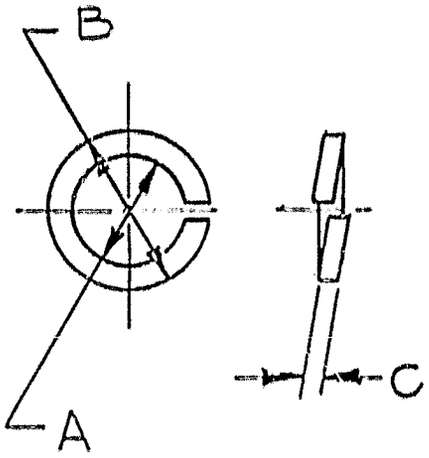

TABLE I

PART NO.	SCR SIZE	A	B	C
AP67-001	4	.115-.121	.209 MAX	.025 MIN
AP67-002	6	.141-.148	.250 MAX	.031 MIN
AP67-003	8	.168-.175	.293 MAX	.040 MIN

5330 DEBRIE LANE
SANTA BARBARA CALIF 93111
964-8676

ELCAM, INC.

Contractors License No 290399

TOLERANCES	REVISIONS			PART NUMBER AP67		
UNLESS OTHERWISE SPECIFIED DECIMAL XX ± .00 XXX ± .00 ANGULAR ± DRAFT	NO	DATE	BY	PART NAME WASHER, LOCK SPRING		
	1			DRAWN BY THOMSON	SCALE NONE	MATERIAL SEE NOTE 1
	2			CHK'D	DATE 15 DEC 76	DRAWING NO ESP-A67
	3			TRACED	APP'D	
	4					
	5					

LEAD ITEM	WIRE MATL ITEM	LEAD LGTH	CIRCUIT POINT FROM (A) TO (B)	TERM AREA NO	JACK STRIP LGTH	SHLD STRIP LGTH	LEAD CUT LGTH	INSUL STRIP LGTH	TIN	NOTE ONE FIG	ACCESSORY ITEMS
J1	1	1.0									
J2	1	1.0									
J3	2	1.4						.20 .20			
J4	1	.7									
J5	1	.8									
J6	1	.8									
J7	2	1.3						.20 .20			
J8	1	.7									
J9	1	1.0									
J10	1	.7									
J11	1	.7									
J12	1	.7									
J13	1	.7									

SHEET 1 OF 2

NOTES:

1. AWG 24 SOLID COPPER WIRE TYPE S, SOFT, LEAD ALLOY COATED.
2. AWG 24 HOOK-UP WIRE TEFLON INSUL., COLOR WHT, SOLID WIRE
3. AWG 18 HOOK-UP WIRE, TEFLON INSUL, COLOR BLACK, STRANDED WIRE.

NOTES CONT ON SH2

6330 DEBBIE LANE
SANTA BARBARA CALIF 93111
964-8676

ELCAM, INC.

Contractors License No. 290399

TOLERANCES	REVISIONS			
UNLESS OTHERWISE SPECIFIED DECIMAL XX ± .00 — XXX ± .00 — ANGULAR ± DRAFT TOL: X ±.06	NO	DATE	BY	

PART NUMBER: AP68

PART NAME: LEAD SET

DRAWN: THOMSON | SCALE: NONE | SIZE: SEE NOTES

CHK'D | DATE: 14-DEC 76 | DRAWING NO: ESP-A68

TRACED | APP'D

LEAD ITEM	WIRE MATL ITEM	LEAD LGTH	CIRCUIT POINT FROM (A) TO (B)	TERM AREA NO	JACK STRIP LGTH	SHLD STRIP LGTH	LEAD CUT LGTH	INSUL STRIP LGTH	TIN	NOTE ONE FIG	ACCESSORY ITEMS
J14	1	.7									
J15	3	6.8						.20			
								.20			
J16	4	6.8						.20			
								.20			
J17	4	5.3						.20			
								.38			
J18	3	8.5						.38			
								.20			
J19	3	6.6						.20			
								.38			
J20	3	3.6						.38			
								.38			
J21	1	.7									
J22	2	2.3						.20			
								.20			

SHEET 2

NOTES: (CONTINUED)

4. AWG 18 HOOK-UP WIRE TEFLON INSUL, COLOR WHT, STRANDED WIRE

5. SOLDER USING 60/40 SOLDER

5330 DEBRIE LANE
SANTA BARBARA, CALIF. 93111
964-8676

ELCAM, INC.

Contractors License No 290399

TOLERANCES	REVISIONS			PART NUMBER AP68		
UNLESS OTHERWISE SPECIFIED DECIMAL .XX ± 0.0 — .XXX ± 0.0 — ANGULAR ± DRAFT	NO	DATE	BY	PART NAME —		
	1					
	2					
	3			DRAWN BY —	SCALE —	MATERIAL —
	4			CHK D	DATE —	DRAWING NO ESP-A68
	5			TRACED	APP D	

ORIGINAL PAGE IS OF POOR QUALITY

NOTES:

1. SWITCH, LOW PRESSURE
   NORMALLY CLOSED
   SINGLE CIRCUIT
   4 PSI - 150 PSI OPER MAX
   PART NO. M-4007

2. SUGGESTED SOURCE(S)
   OF SUPPLY:
   STEWART-WARNER CORP
   HOBBS DIVISION
   FSCM NO. 74400

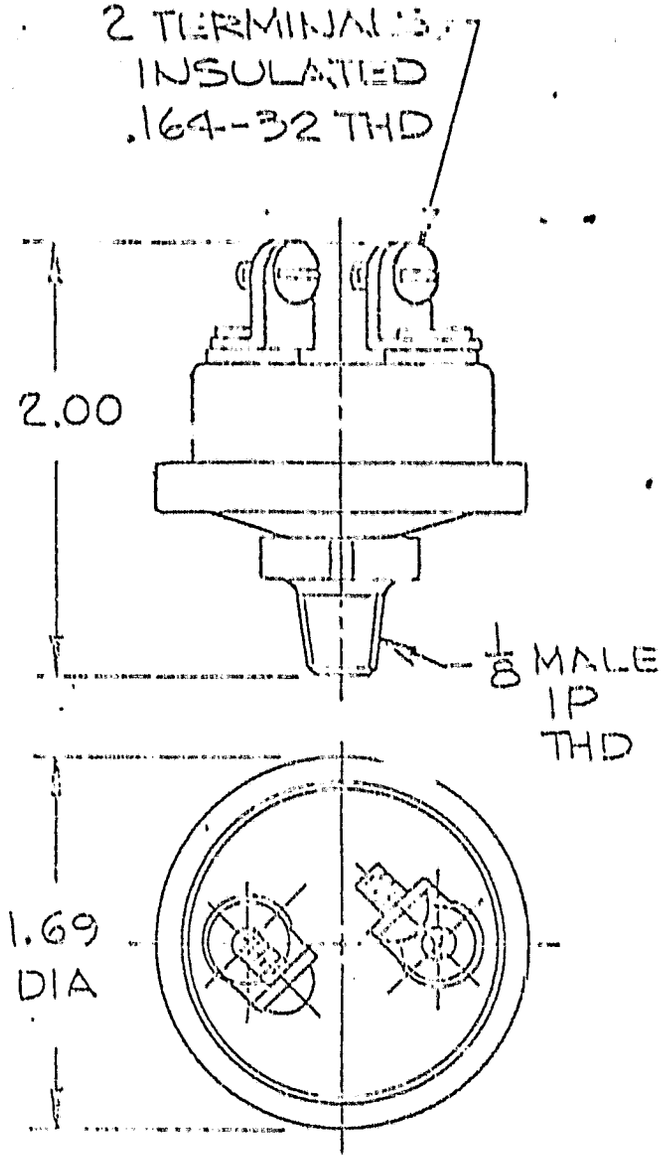

5330 DEBBIE LANE
SANTA BARBARA, CALIF 93111
964-8676

ELENM, INC.

Contractors License No. 290399

TOLERANCES	REVISIONS			PART NUMBER AP71
UNLESS OTHERWISE SPECIFIED DECIMAL	NO	DATE	BY	PART NAME SWITCH, LOW PRESS.
XX ± .00 —	1			DRAWN BY THOMSON · SCALE NONE · [illegible] NOTE 1
XXX ± .00 —	2			CHK'D · DATE 11 MAY 77 · [illegible]
ANGULAR ± —	3			TRACED · APP'D · ESP-A7
DRAFT	4			
	5			

Figure 2.1.2

NOTES:

1. VALVE, GENERAL PURPOSE
   THREE-WAY NORMALLY OPEN
   OPER PRESS DIFFERENTIAL:
   150 PSI MAX.
   10 PSI MIN
   PART NO. LP8RBMX37
   24 VDC VOLTAGE

ORIGINAL PAGE IS OF POOR QUALITY

2. SUGGESTED SOURCE(S) OF SUPPLY:
   SKINNER PRECISION INDUSTRIES INC.
   FSCM NO. 55130

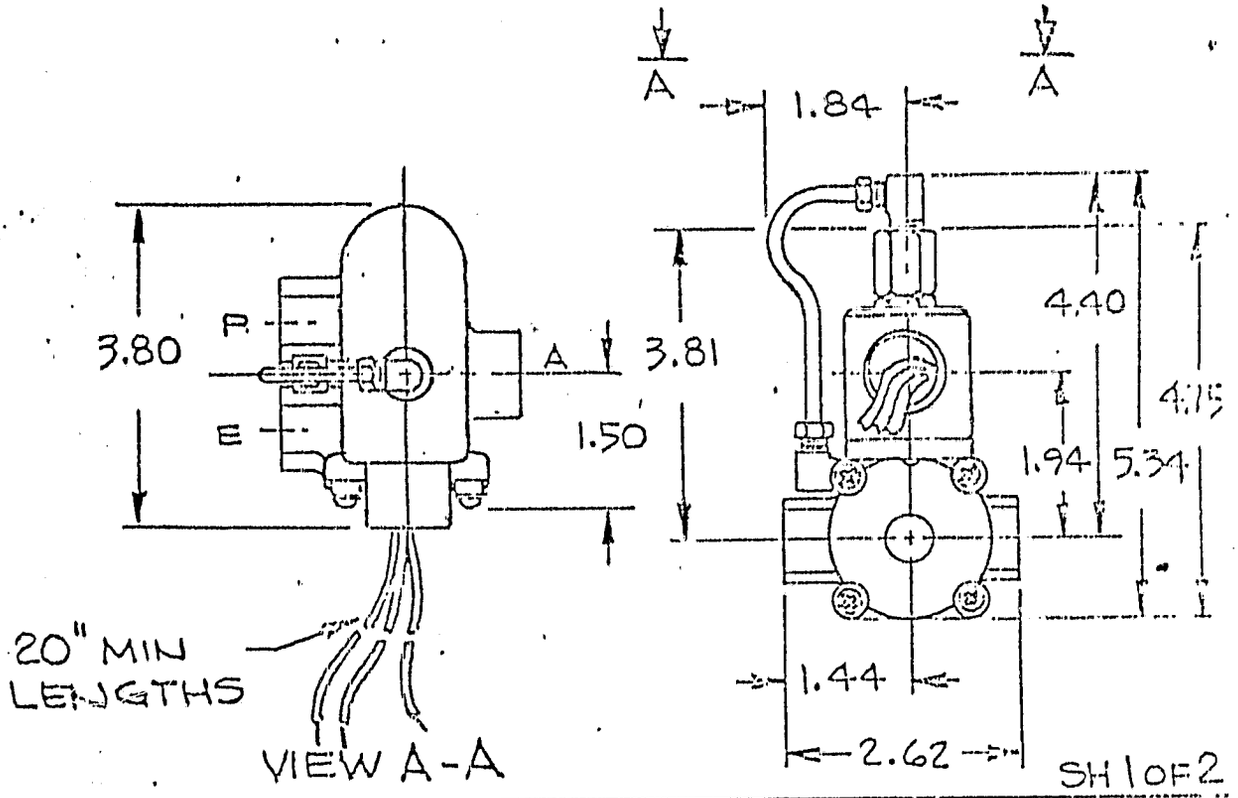

5330 DEBRIE LANE
SANTA BARBARA, CALIF. 93111
964-8676

BRESM, INC.

Contractors License No. 790399

TOLERANCES	REVISIONS			PART NUMBER AP72
UNLESS OTHERWISE SPECIFIED DECIMAL .XX ± 0.0 — .XXX ± 0.0 — ANGULAR ± DRAFT VENDOR'S TOLER APPLY	NO	DATE	BY	PART NAME VALVE, THREE-WAY
	1			
	2			
	3			
	4			
	5	111		

DRAWN BY THOMSON — SCALE NONE — MATERIAL SEE NOTE 1
CHK'D — DATE 11 MAY 72 — DRAWING NO. ESP-A72
TRACED — APP'D

Figure 2.1.1

NOTES:

1. MATERIAL:
   STEEL, CARBON
   CMPSN 1010, TEMPER NO. 4
   NO. 18 GA (.048)

2. PROTECTIVE FINISH:
   ZINC PLATE
   .0002 MIN THICKNESS
   CLEAR CHROMATE
   SPEC QQ-Z-325

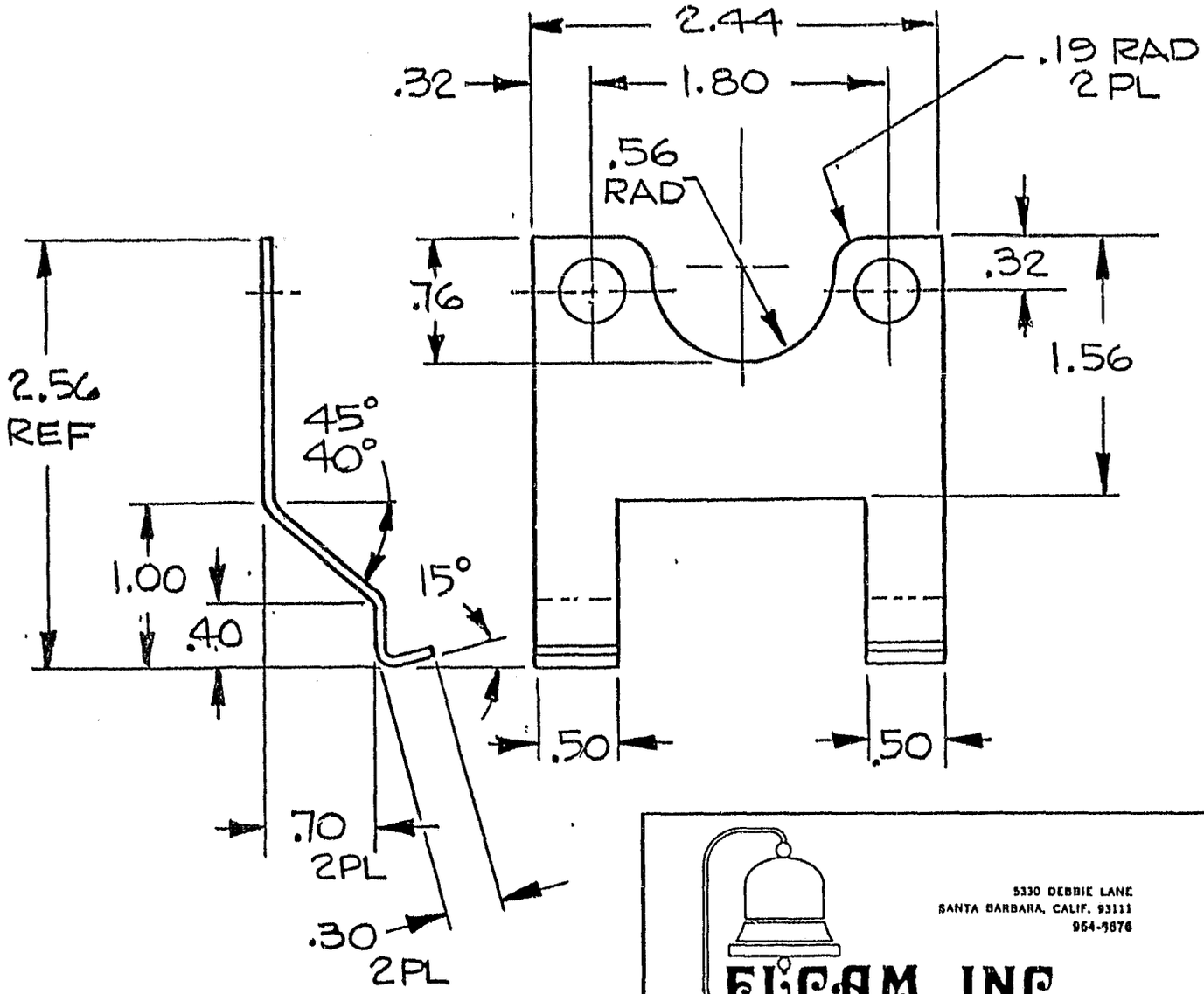

5330 DEBBIE LANE
SANTA BARBARA, CALIF. 93111
964-3676

ELCAM, INC.

Contractors License No 290399

TOLERANCES	REVISIONS			PART NUMBER TP2		
UNLESS OTHERWISE SPECIFIED DECIMAL .XX ± 0.0 2, .XXX ± 0.0 –, ANGULAR ± 30, DRAFT	NO	DATE	BY			
	1			PART NAME RESTRAINT PLATE, SENSOR		
	2					
	3			DRAWN BY THOMSON	SCALE FULL	MATERIAL SEE NOTE 1
	4			CHK'D	DATE 6 DEC 76	DRAWING NO ESP-T2
	5			TRACED	APP'D	

NOTES:

1. MATERIAL:
   RUBBER, BUNA N
   DUROMETER 55-65
   (FIRM)
   COLOR BLACK

2. SUGGESTED SOURCE(S) OF SUPPLY:
   AO SMITH CORP
   FSCM 28611
   PART NO. 37819
   OR EQUIV

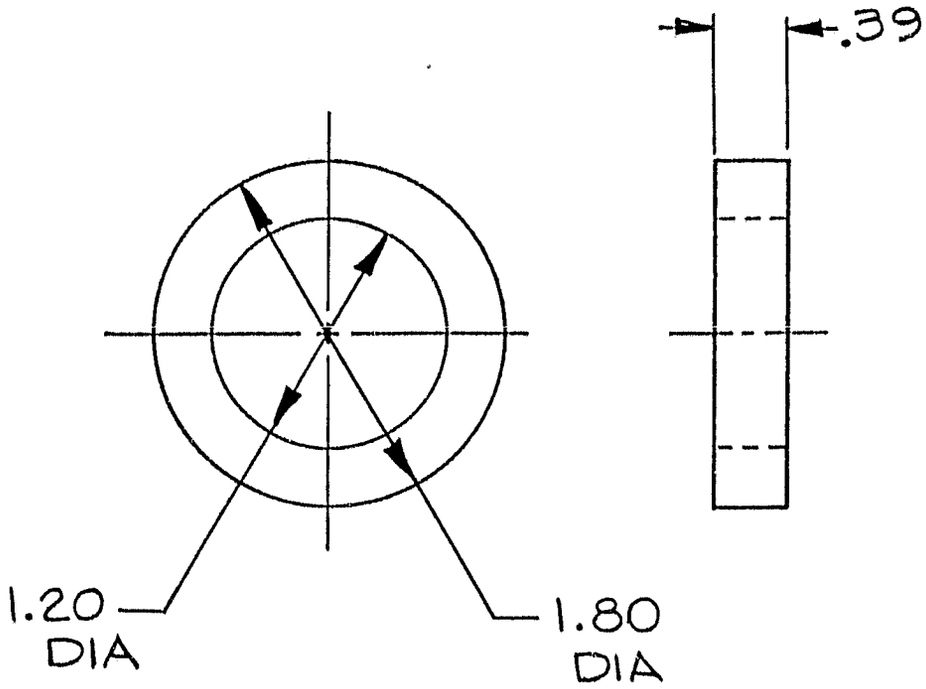

5330 DEBBIE LANE
SANTA BARBARA, CALIF 93111
964-8676

ELCAM, INC.

Contractors License No 290399

TOLERANCES	REVISIONS					
UNLESS OTHERWISE SPECIFIED DECIMAL XX ± 0.0 XXX ± 0.0 ANGULAR ± DRAFT VENDORS TOL APPLY	NO	DATE	BY	PART NUMBER TP5		
	1			PART NAME GASKET		
	2					
	3			DRAWN BY THOMSON	SCALE FULL	MATERIAL SEE NOTE 1
	4			CHK D	DATE 6 DEC 76	DRAWING NO ESP-T5
	5			TRACED	APP D	

NOTES:

1. MATERIAL:
   ALUMINUM ALLOY EXTRUSION
   CMPSN 6063 TEMPER T5
   DIE SECTION 66876

2. VENDOR:
   REYNOLDS METALS CO.
   FSCM No. 09983

3. PROTECTIVE FINISH:
   NONE

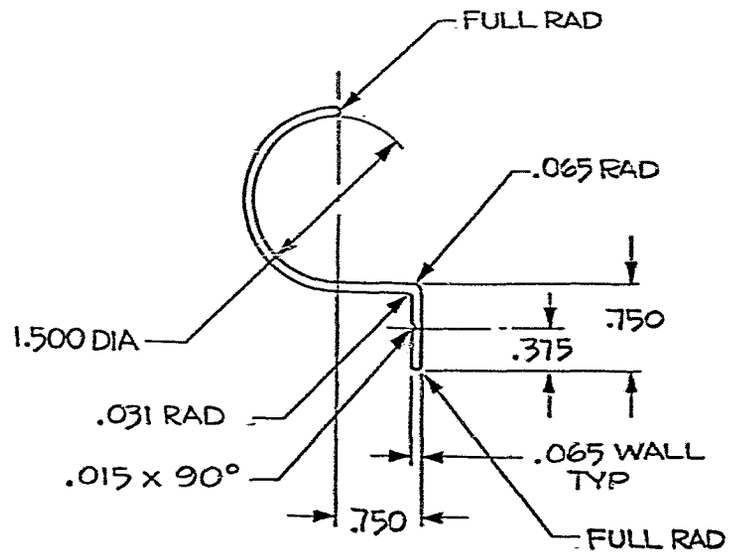

TABLE I

PART NO.	LENGTH	REMARKS
I1-001	CUT TO 1.74-1.75	
I1-002	AS SUPPLIED	

ELCAM, INC.

TOLERANCES: UNLESS OTHERWISE SPECIFIED DECIMAL .XX ± 0.0 .XXX ± 0.0 ANGULAR ± DRAFT VENDORS STD TOL APPLY	REVISIONS: NO. DATE BY	PART NUMBER I1
		PART NAME PIPE HANGER
		DRAWN THOMSON SCALE FULL SHEET 1 OF 1
		DATE 27 NOV 76
		ESI-1

NOTES:

1. MATERIAL:
   BRASS SOLDER-JOINT
   SWING CHECK VALVE - TEFLON SEAT
   WORKING PRESS. 125 LBS
   TEMP. 200° F MIN

2. SUGGESTED SOURCE(S) OF SUPPLY:
   CRANE CO.
   FSCM NO. 14959

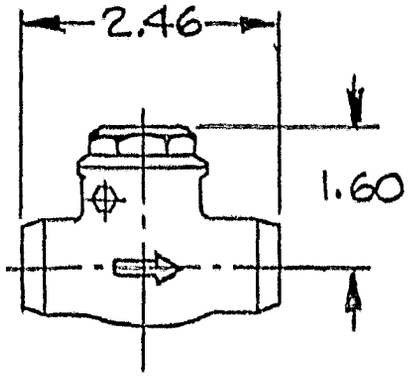

STYLE 1

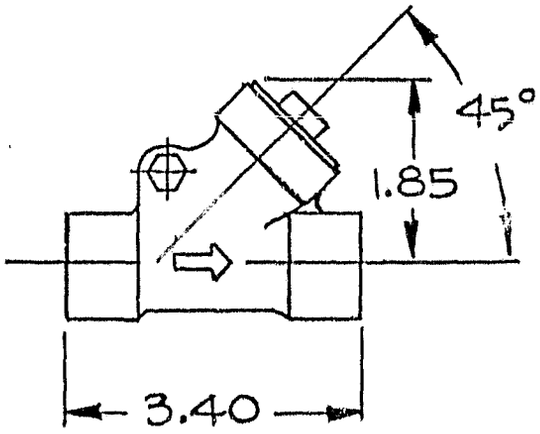

STYLE 2

TABLE I

PART NO.	STYLE	SIZE
I2-001	1	1/2
I2-002	2	3/4

5330 DEBRIE LANE
SANTA BARBARA, CALIF. 93111
964-8676

ELCAM, INC.

Contractors License No 290399

TOLERANCES	REVISIONS					
UNLESS OTHERWISE SPECIFIED DECIMAL .XX ± 0.0 — .XXX ± 0.0 — ANGULAR ± DRAFT VENDOR'S TOL APPLY	NO	DATE	BY	PART NUMBER I2		
	1			PART NAME CHECK VALVE		
	2					
	3			DRAWN BY THOMSON	SCALE NONE	MATERIAL SEE NOTE 1
	4			CHK D	DATE 15 DEC 76	DRAWING NO ESI-2
	5	115		TRACED	APP D	

NOTES:

1. MATERIAL:
   PRESSURE & TEMPERATURE
   RELIEF VALVE.
   AUTOMATIC-RESEATING
   COMBINATION TYPE.
   BRASS CONSTRUCTION
   No. 100XL
   PSI SET 150 LBS
   TEMP SET 210° F

2. SUGGESTED
   SOURCE(S) OF
   SUPPLY:
   WATTS
   REGULATOR CO.
   FSCM No. 79227

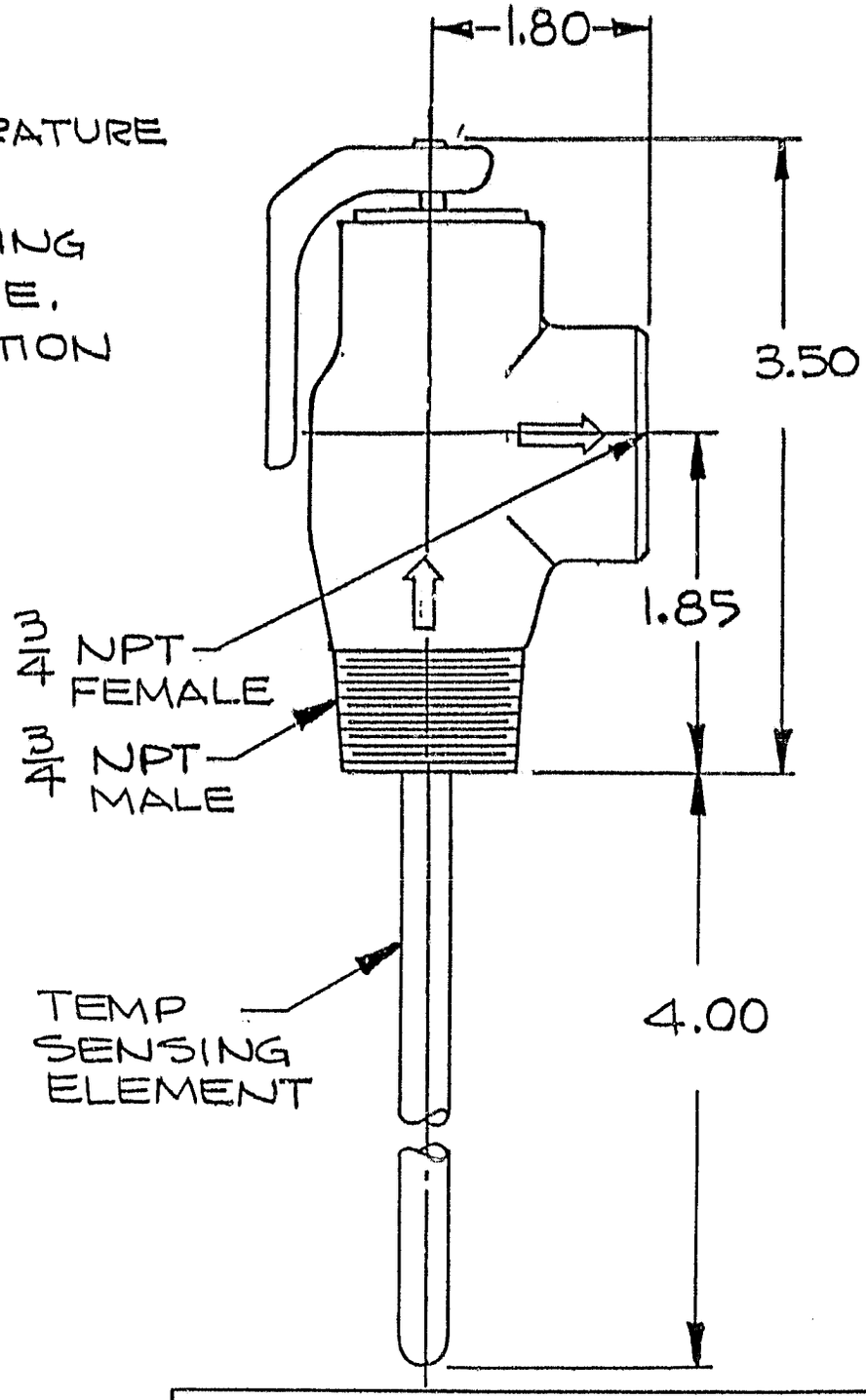

5330 DEBBIE LANE
SANTA BARBARA, CALIF. 93111
964-8676

ELCAM, INC.

Contractors License No. 290399

TOLERANCES	REVISIONS					
UNLESS OTHERWISE SPECIFIED DECIMAL .XX ± 0.0 .XXX ± 0.0 ANGULAR ± DRAFT VENDOR'S TOL APPLY	NO	DATE	BY	PART NUMBER I3		
	1			PART NAME PRESS & TEMP VALVE		
	2					
	3			DRAWN BY THOMSON	SCALE FULL	MATERIAL SEE NOTE 1
	4			CHK'D	DATE 15 DEC 76	DRAWING NO
	5	116		TRACED	APP'D	ESI-3

NOTES:

1. MATERIAL:
   BRASS SOLDER JOINT
   GATE VALVE
   NON-RISING STEM
   SOLID WEDGE
   WORKING PRESS, 125 LBS
   TEMP. 200°F MIN

2. SUGGESTED SOURCE(S) OF SUPPLY:
   CRANE CO.
   FSCM NO. 14959

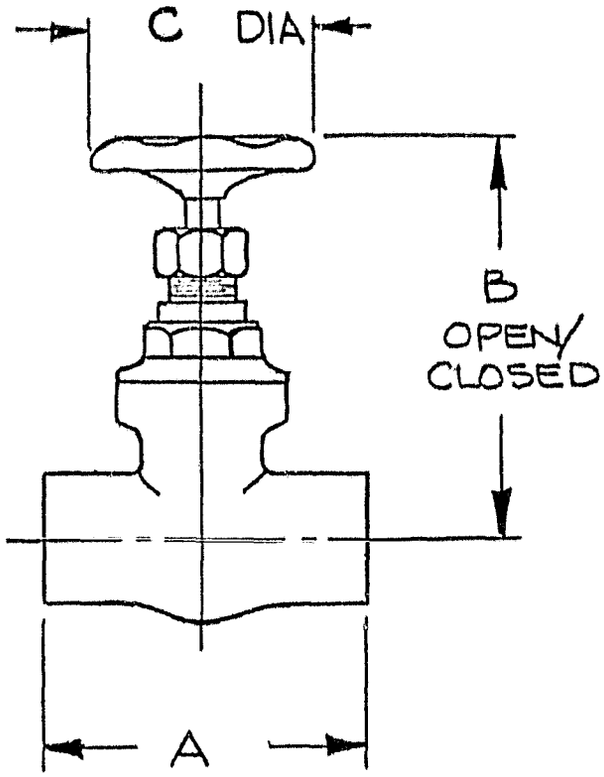

TABLE I

PART NO.	A	B	C	SIZE
I5-001	1.85	3.20	1.88	1/2
I5-002	2.50	3.40	2.16	3/4

5330 DEBBIE LANE
SANTA BARBARA, CALIF. 93111
964-8676

ELCAM, INC.

Contractors License No 290399

TOLERANCES	REVISIONS					
UNLESS OTHERWISE SPECIFIED DECIMAL .XX ± 0.0 — .XXX ± 0.0 — ANGULAR ± DRAFT 1 VENDORS TOL APPLY	NO	DATE	BY	PART NUMBER I5		
	1			PART NAME GATE VALVE		
	2					
	3			DRAWN BY THOMSON	SCALE NONE	MATERIAL SEE NOTE 1
	4			CHK D	DATE 15 DEC 76	DRAWING NO ESI-5
	5	117		TRACED	APP D	

NOTES:

1. MATERIAL:
   PRESSURE RELIEF VALVE
   WITH TEST LEVER
   BRASS CONSTRUCTION
   TYPE FWL-2
   PSI SET 150 LBS

2. SUGGESTED SOURCE(S)
   OF SUPPLY:
   CASH A.W. VALVE MFG CORP.
   FSCM NO. 71342

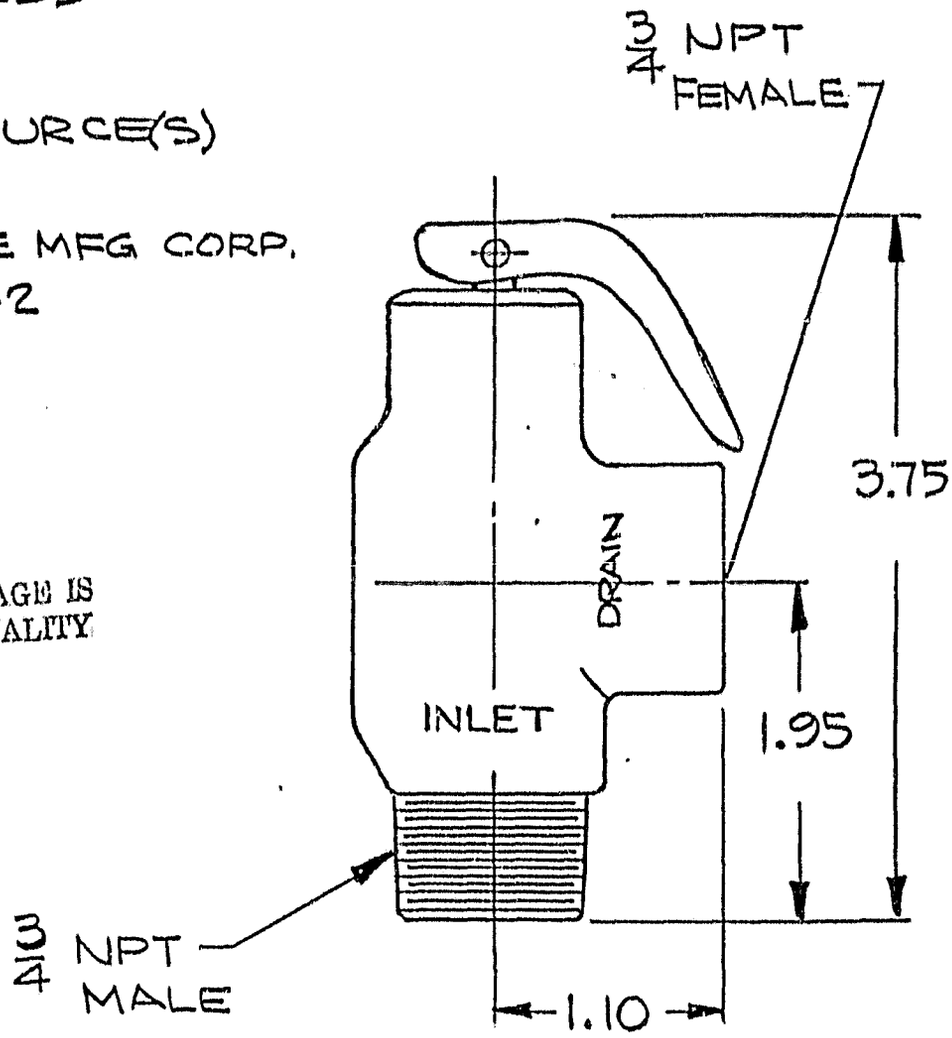

ORIGINAL PAGE IS
OF POOR QUALITY

5330 DEBBIE LANE
SANTA BARBARA, CALIF. 93111
964-8676

ELCAM, INC.

Contractors License No 290399

TOLERANCES	REVISIONS					
UNLESS OTHERWISE SPECIFIED DECIMAL .XX ± 0.0 .XXX ± 0.0 ANGULAR ± DRAFT VENDOR'S TOL APPLY	NO	DATE	BY	PART NUMBER I6		
	1			PART NAME PRESSURE RELIEF VALVE		
	2					
	3			DRAWN BY THOMSON	SCALE FULL	MATERIAL SEE NOTE 1
	4			CHK'D	DATE 15 DEC 76	DRAWING NO ESI-6
	5	118		TRACED	APP'D	

NOTES:

1. MATERIAL:
   CARBON STEEL STANDARD ELECTRICAL JUNCTION BOX WITH COVER.

2. PROTECTIVE FINISH:
   CADMIUM OR ZINC CHROMATE.

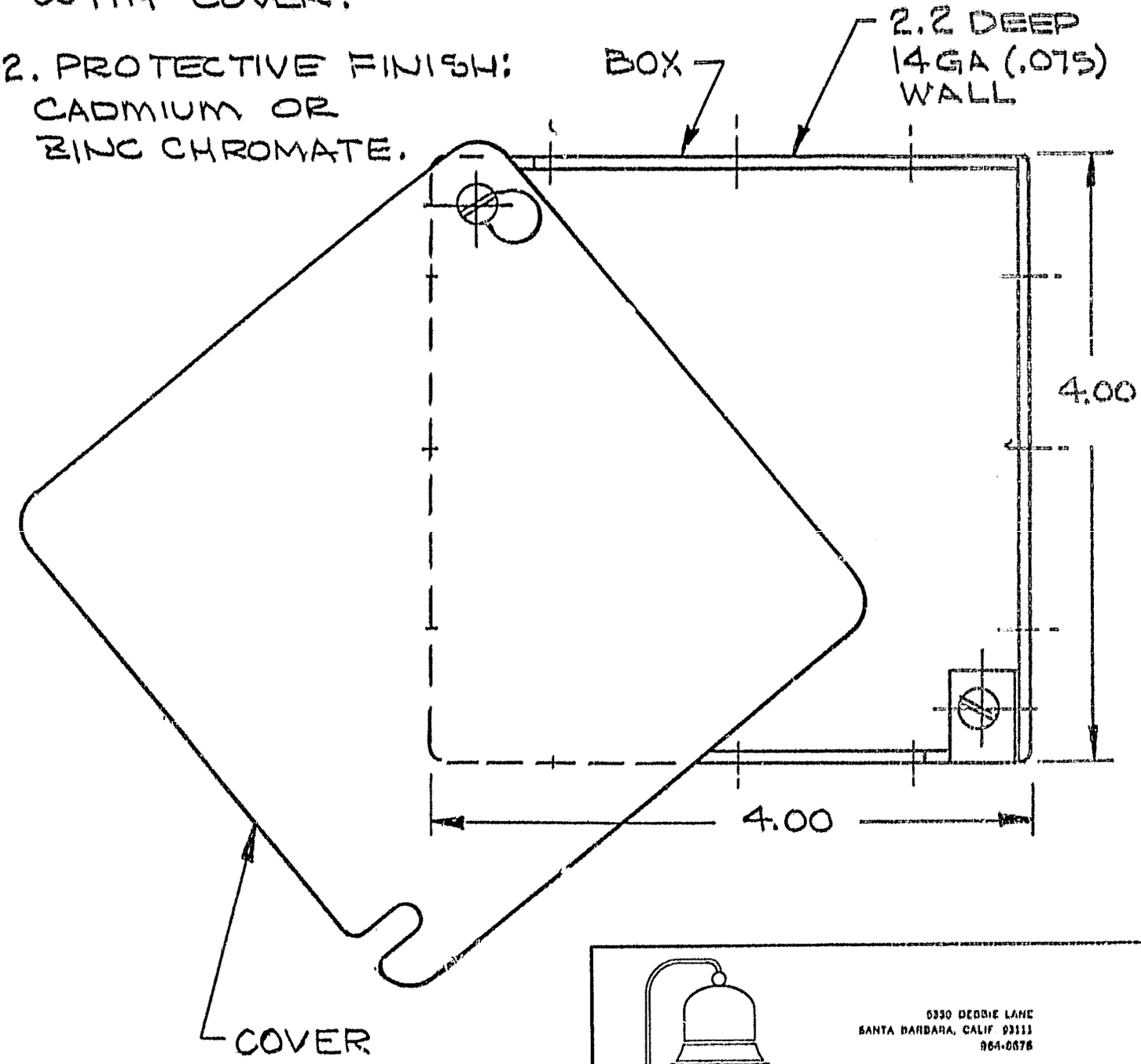

5330 DEBBIE LANE
SANTA BARBARA, CALIF 93111
964-0678

ELCAM, INC.

Contractors License No 290395

TOLERANCES	REVISIONS				
UNLESS OTHERWISE SPECIFIED DECIMAL .XX ± 0.0 — .XXX ± 0.0 — ANGULAR ± DRAFT VENDOR'S TOL APPLY	NO	DATE	BY	PART NUMBER I7	
	1			PART NAME HOUSING	
	2				
	3			DRAWN BY THOMSON	SCALE FULL / MATERIAL SEE NOTE 1
	4			CHK'D / DATE 16 DEC 76	DRAWING NO ESI-7
	5	119		TRACED / APP'D	

NOTES:

1. MATERIAL:
   BRASS SOLDER JOINT
   TEMPERING VALVE WITH
   EXTERNAL ADJUSTMENT
   120° - 140° - 160° F SETTINGS
   NO. 526

2. SUGGESTED SOURCE(S)
   OF SUPPLY:
   TACO INC.
   FSCM NO. 59015

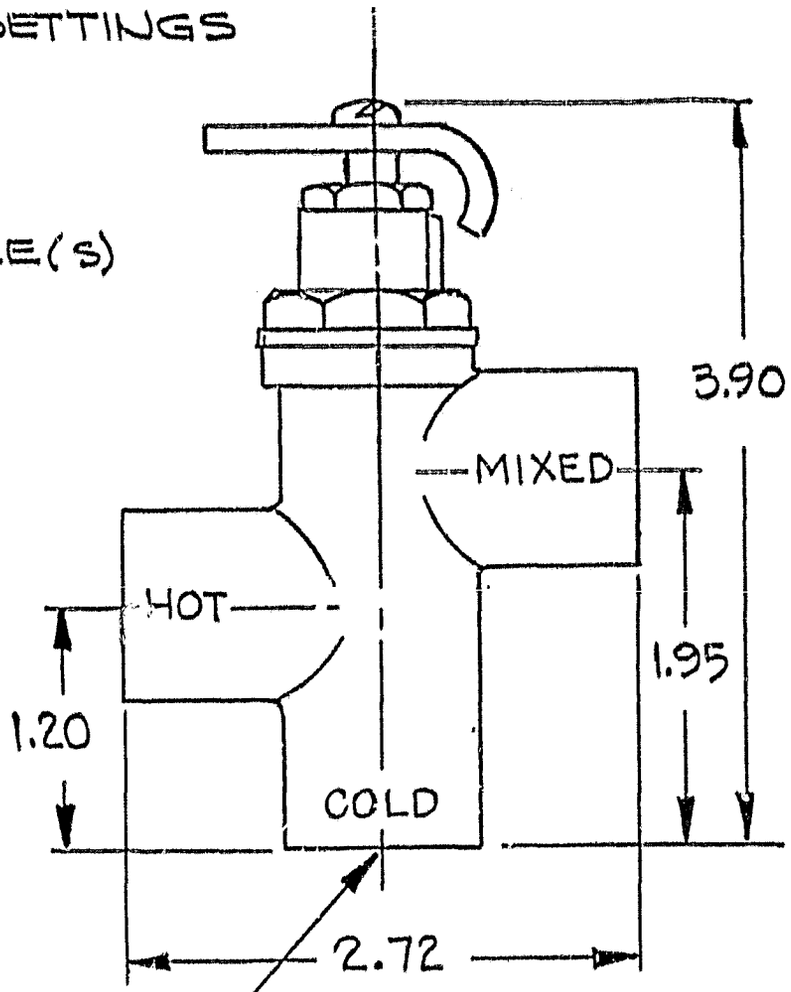

3/4 SOLDER
JOINT
3 PLACES

5330 DEBBIE LANE
SANTA BARBARA, CALIF. 93111
964-8676

ELCAM, INC.

Contractors License No 290399

TOLERANCES	REVISIONS			PART NUMBER I12		
UNLESS OTHERWISE SPECIFIED DECIMAL .XX ± 0.0 .XXX ± 0.0 ANGULAR ± DRAFT VENDOR'S TOL APPLY	NO	DATE	BY	PART NAME TEMPERING VALVE		
	1					
	2					
	3			DRAWN BY THOMSON	SCALE FULL	MATERIAL SEE NOTE 1
	4			CHK'D	DATE 16 DEC 76	DRAWING NO ESI-12
	5	I20		TRACED	APP'D	

1. VALVE, VENT, AIR
   BRASS
   FLOAT TYPE
   MAX WORKING PRESS 150 PSI

2. PART NO. 87

3. SUGGESTED SOURCE(S)
   OF SUPPLY:
   ITT- BELL & GOSSETT DIV
   FSCM 06631

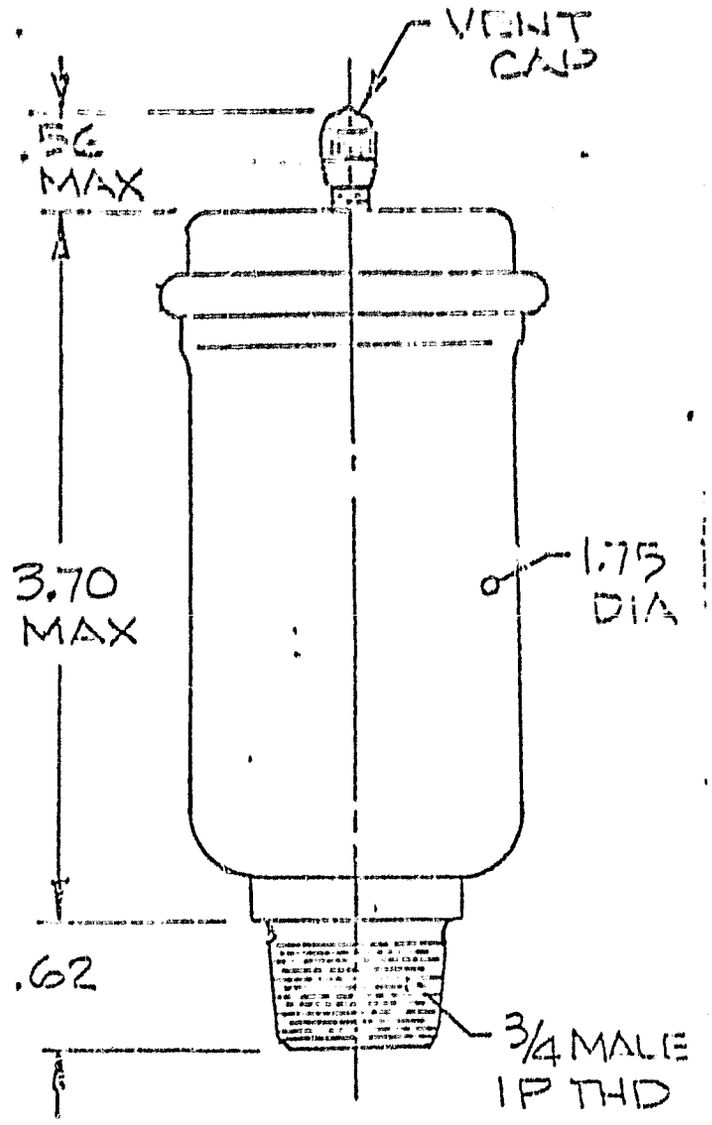

5330 DERRIE LANE
SANTA BARBARA, CALIF. 93111
964 8676

ELCAM, INC.

Contractors License No. 290399

TOLERANCES	REVISIONS			PART NUMBER I-14		
UNLESS OTHERWISE SPECIFIED DECIMAL XX ± 0.0 — XXX ± 0.0 — ANGULAR ± DRAFT VENDOR'S TOLER APPLY	NO	DATE	BY	PART NAME VENT VALVE, AIR		
	1			THOMSON	SCALE NONE	[illegible]
	2			CHK'D	DATE 1 JUNE 77	DWG NO ESI-14
	3			TRACED	APP'D	
	4					
	5					

Figure 2.1.5

NOTES:

1. VALVE, CHECK
   BRASS
   OPER TEMP -40° TO 250°F
   CRACKING PRESS 1 PSI NOM

2. PART NO.
   2259 B-2MM

3. SUGGESTED SOURCE(S)
   OF SUPPLY:
   CIRCLE SEAL CORP
   FSCM NO. 27409

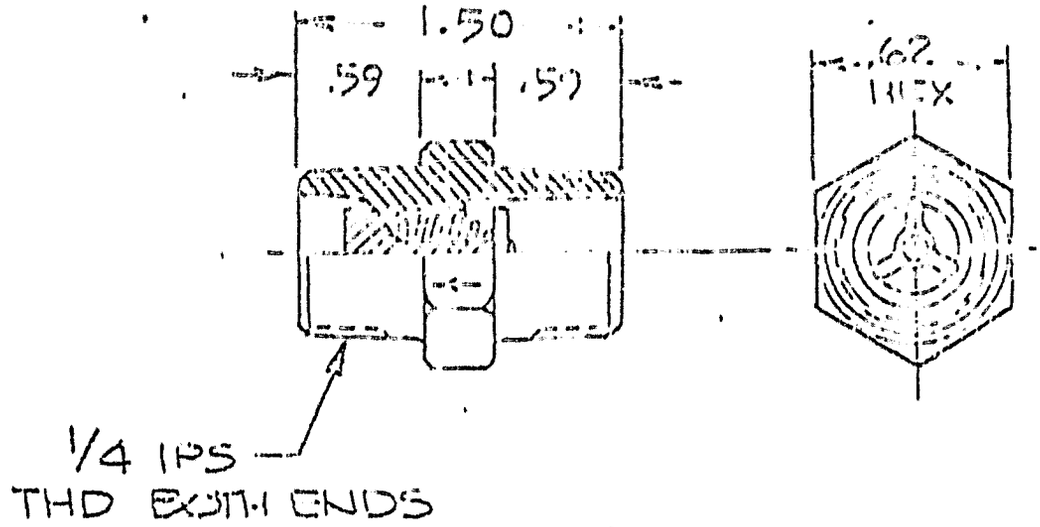

ORIGINAL PAGE IS
OF POOR QUALITY

5330 CEBRIE LANE
SANTA BARBARA, CALIF. 93111
964 8676

FREEMAN, INC.
Contractors License No. 290199

TOLERANCES	REVISIONS			PART NUMBER I-15
UNLESS OTHERWISE SPECIFIED DECIMAL XX ± 0.0 — XXX ± 0.0 — ANGULAR ± DRAFT VENDOR'S TOLER APPLY	NO	DATE	BY	PART NAME CHECK VALVE
	1			THOMSEN / NONE
	2			CHK'D / 21 MAY 77
	3			TRACED
	4			
	5	122		

Figure 2.1.4

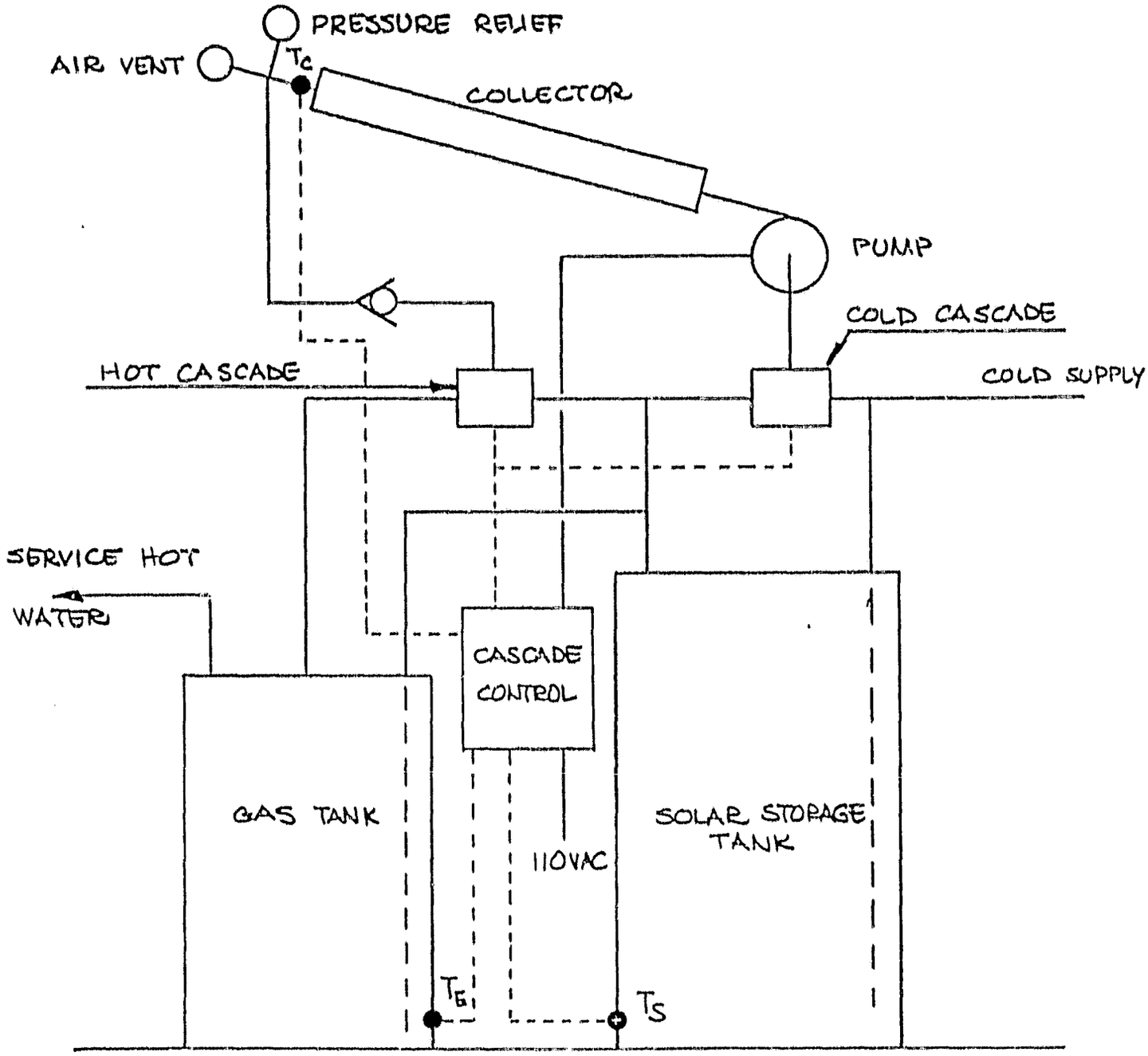

5330 DEBBIE LANE
SANTA BARBARA, CALIF. 93111
PHONE 964-8676

ELCAM, INC.

Contractors License No 290399

TOLERANCES	REVISIONS			PART NUMBER		
UNLESS OTHERWISE SPECIFIED DECIMAL XX ± 0.0 .XXX ± 0.0 ANGULAR ± DRAFT	NO	DATE	BY			
	1			PART NAME GAS CASCADE SCHEMATIC		
	2					
	3			DRAWN BY TCH	SCALE —	MATERIAL —
	4			CHK'D	DATE 3-10-78	DRAWING NO ESS-8
	5	123		TRACED	APP'D	

NOTES:

1. MATERIAL:
   GLASS-LINED
   WATER HEATER
   MODEL, SEE TABLE I

2. VENDOR:
   AO SMITH CORP
   ESCM NO. 28611

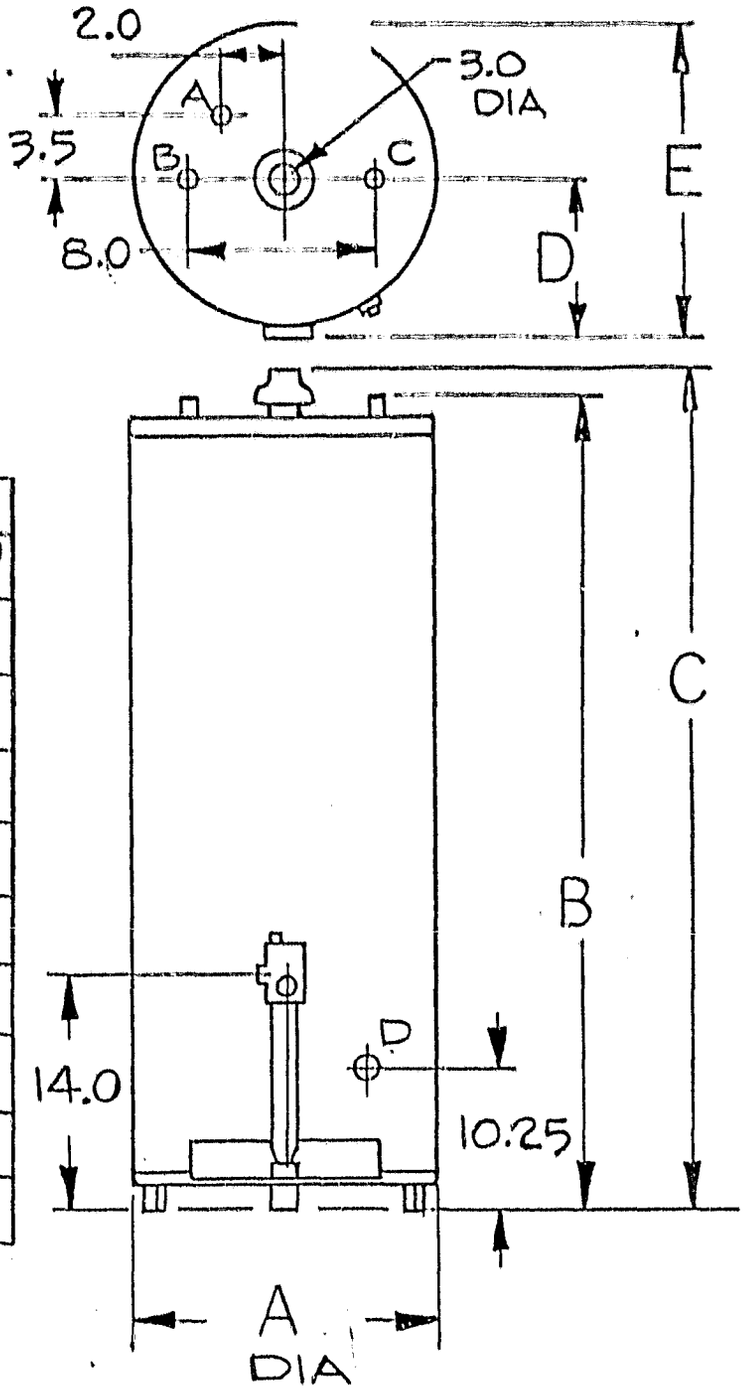

TABLE I

SPECS	-001	-002	-003	-004
MODEL	PGC-40 NAT	PGC-40 L.P.	PGC-50 NAT	PGC-50 L.P.
CAP IN GALS	40	40	50	50
INPUT BTU/HR	32,500	37,000	44,000	40,000
REC GPH/ 100° RISE	29.3	31.1	39.6	33.6
SHIP WT/LBS	129	138	166	166
DIM A	18.25	18.25	20.25	20.25
B	55.12	54.50	59	59
C	57.62	61.62	65.5	65.5
D	10.62	10.62	11.62	11.62
E	21.75	21.75	23.75	23.75

CODE

A = RELIEF VALVE OPENING 3/4 NPT
B = OUTLET 3/4 NPT
C = INLET 3/4 NPT
D = DRAIN VALVE

NOTE: PART NO. MUST INCL DASH NO.
ie: E4-001

6330 DEBBIE LANE
SANTA BARBARA, CALIF. 93111
964-8676

ELCAM, INC.

Contractors License No 290399

TOLERANCES	REVISIONS				
UNLESS OTHERWISE SPECIFIED DECIMAL XX ± 0.0 XXX ± 0.0 ANGULAR ± DRAFT VENDOR'S TOL APPLY	NO	DATE	BY	PART NUMBER E4	
	1			PART NAME GAS TANK	
	2				
	3			DRAWN BY THOMSON	SCALE NONE / MATERIAL SEE NOTE 1
	4			CHK'D	DATE 29 NOV 76 / DRAWING NO ESE-4
	5	124		TRACED	APP'D

NOTES :

1. GLASS : 1/8" TEMPERED
2. ALL EDGES TO BE BEVELLED
3. SAFETY MARK ETCHED IN PLACE

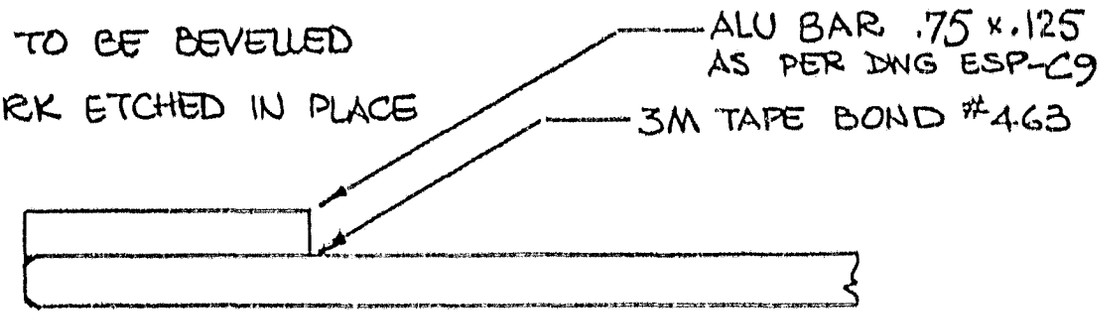

SECTION AA SCALE 2:1

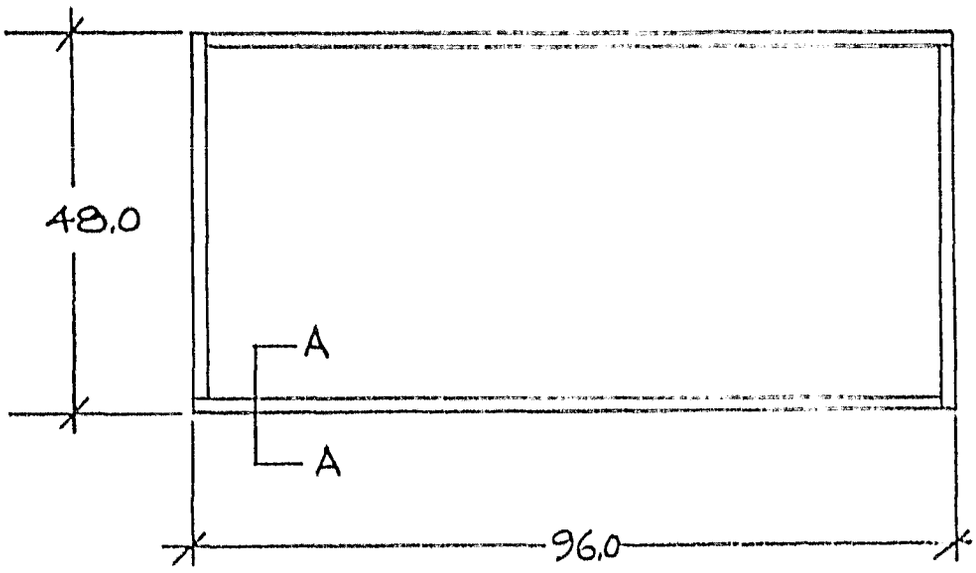

5330 DEBBIE LANE
SANTA BARBARA, CALIF. 93111
PHONE 964-8676

ELCAM, INC.

Contractors License No 290399

TOLERANCES	REVISIONS				
UNLESS OTHERWISE SPECIFIED DECIMAL XX ± 0.0 .XXX ± 0.0 ANGULAR ± DRAFT	NO	DATE	BY	PART NUMBER CP-21	
	1			PART NAME GLASS COVER ASSY.	
	2				
	3			DRAWN BY TCH / SCALE —	MATERIAL AS NOTED
	4			CHK'D / DATE 3-10-78	DRAWING NO ESP-C21
	5	125		TRACED / APP'D	

EL CAMINO POOLS 964-6929
EL CAMINO SOLAR SYSTEMS 964-0676

ELCAM, INC.

5330 DEBBIE LN., SANTA BARBARA, CALIFORNIA 93111

November 19, 1976

NASA
Marshall Space Flight Center
Alabama 35812

Attention: Mr. Mitchell Cash

Dear Mitch:

We hereby transmit the documents required for review prior to PDR1, according to Contract NAS8-32245, TD2 and TD3. Executed originals and two copies of TD2 and TD3 are being mailed to you under separate cover.

For your information we have also included three copies of our collector data sheet which has just come off the press.

We look forward to your comments and review.

Yours truly,

Terence C. Honikman
Vice President

Enclosures: 10 copies, ESC-2, Verification Plan
10 copies, ESC-7a, Drawing List
10 copies, ESC-7b, Suggested Prototype Design Review Data
2 copies, 1 reproducible, ESC-7c System Drawings
10 copies, ESC-7d, Autocontrol Logic
10 copies, ESC-7e, Measurement Definitions (Mini-P.I.P.)
10 copies, ESC-7f, Proposed Modifications to SUNSPOT CASCADE
10 copies, ESC-7g, List of Materials in Contact with Potable Water
10 copies, ESC-15, Special Handling, Installation & Maintenance Tools List
10 copies, ESC-18 Hazards Analysis

Distribution, except for drawings, as follows:
1 copy to Contracting Officer/AP32
2 copies to Technical Manager/FA32
7 copies to SH&C Change Integration/FA02B

ORIGINAL PAGE IS
OF POOR QUALITY

NOTES:

1. MATERIAL:
   VINYL PLASTIC
   COLOR RED
2. VENDOR:
   SINCLAIR & RUSH INC.
   FSCM NO
   PART NO. 625-8

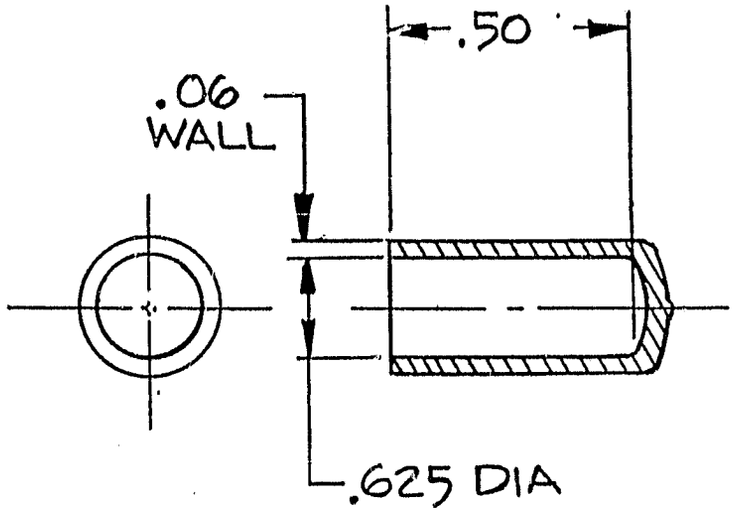

5330 DEBBIE LANE
SANTA BARBARA, CALIF. 93111
PHONE 964 8693

ELCAM, INC.

Contractors License No. 290399

TOLERANCES	REVISIONS				
UNLESS OTHERWISE SPECIFIED DECIMAL .XX ± 0.0 2 .XXX ± 0.0 ANGULAR ± DRAFT	NO	DATE	BY	PART NUMBER CP16	
	1			PART NAME VINYL CLOSURE	
	2				
	3			DRAWN BY THOMSON / SCALE NONE	MATERIAL SEE NOTE 1
	4			CHK D / DATE	DRAWING NO ESP-C16
	5	127		TRACED / APP D	

NOTES:

1. MATERIAL:
   PHOTOGRAPHIC PAPER.
   PRESSURE-SENSITIVE
   ADHESIVE BACKED WITH
   PROTECTIVE BACKING
   PAPER.

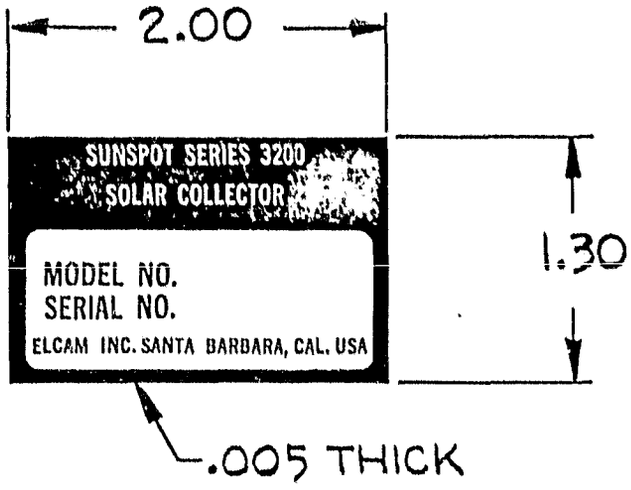

5330 DEBBIE LANE
SANTA BARBARA, CALIF. 93111
PHONE 964 8693

ELCAM, INC.

Contractors License No. 290399

TOLERANCES	REVISIONS					
UNLESS OTHERWISE SPECIFIED DECIMAL .XX ± .003 .XXX ± .00 ANGULAR ± DRAFT	NO	DATE	BY	PART NUMBER CP15		
	1			PART NAME LABEL, COLLECTOR		
	2					
	3			DRAWN BY THOMSON	SCALE FULL	MATERIAL SEE NOTE 1
	4			CHK'D	DATE 14 NOV 76	DRAWING NO ESP-C15
	5	128		TRACED	APP'D	

NOTES:

1. MATERIAL:
   CARBON STEEL

2. PROTECTIVE FINISH:
   ZINC PLATE

3. MFG PART NO.
   STANLEY NO. 999

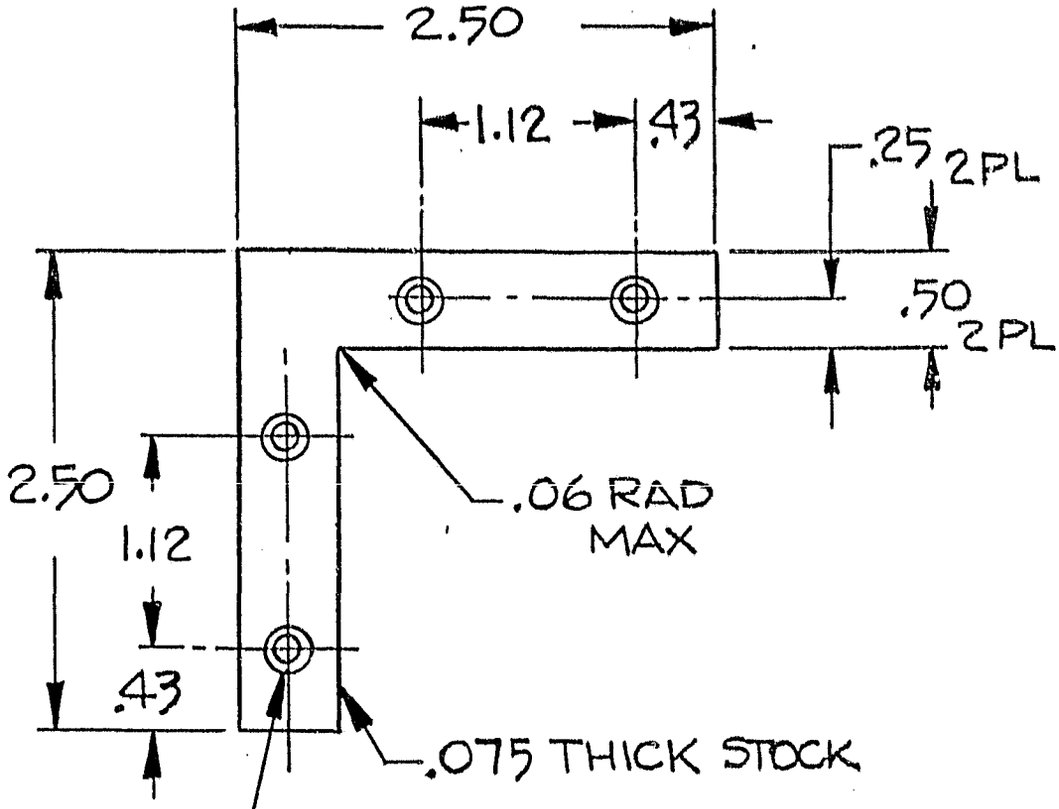

.198-.204 DIA
CSK 120° TO .25 DIA
4 HOLES

5330 DEBBIE LANE
SANTA BARBARA, CALIF. 93111
PHONE 964 8603

ELCAM, INC.

Contractors License No. 290399

TOLERANCES	REVISIONS				
UNLESS OTHERWISE SPECIFIED DECIMAL .XX ± 0.02 .XXX ± 0.0 ANGULAR ± 30' DRAFT	NO	DATE	BY	PART NUMBER CP14	
	1			PART NAME CORNER BRACKET	
	2				
	3			DRAWN BY THOMSON	SCALE FULL	MATERIAL SEE NOTE 1
	4			CHK'D	DATE 14 NOV 76	DRAWING NO ESP-C14
	5	129		TRACED	APP'D	

NOTES:

1. MATERIAL:

VYNIL RUBBER STRIP.
CLOSED CELL SPONGE
DUROMETER 40-50
COLOR BLACK. PRESSURE-SENSITIVE
ADHESIVE BACKED WITH
PROTECTIVE BACKING PAPER.

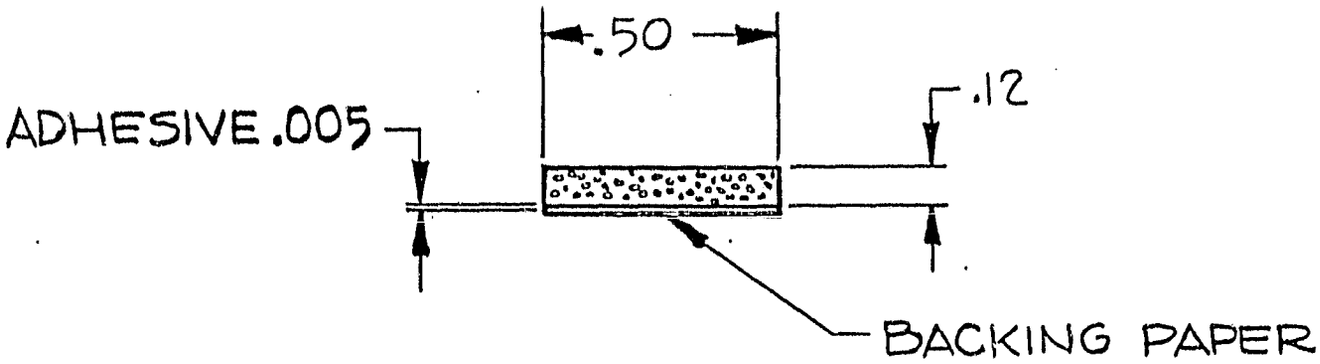

5330 DEBBIE LANE
SANTA BARBARA, CALIF. 93111
PHONE 964 8693

ELCAM, INC.

Contractors License No. 290399

TOLERANCES	REVISIONS					
UNLESS OTHERWISE SPECIFIED DECIMAL .XX ± 0.0 .XXX ± 0.0 ANGULAR ± DRAFT	NO	DATE	BY	PART NUMBER CP7		
	1			PART NAME GASKET		
	2					
	3			DRAWN BY THOMSON	SCALE NONE	MATERIAL SEE NOTE 1
	4			CHK'D	DATE 14 NOV 76	DRAWING NO ESP-C7
	5	130		TRACED	APP'D	

NOTES:

1. MATERIAL:
   RUBBER, SYNTHETIC
   COLOR BLACK

2. VENDOR(S)

   RUBBERCRAFT

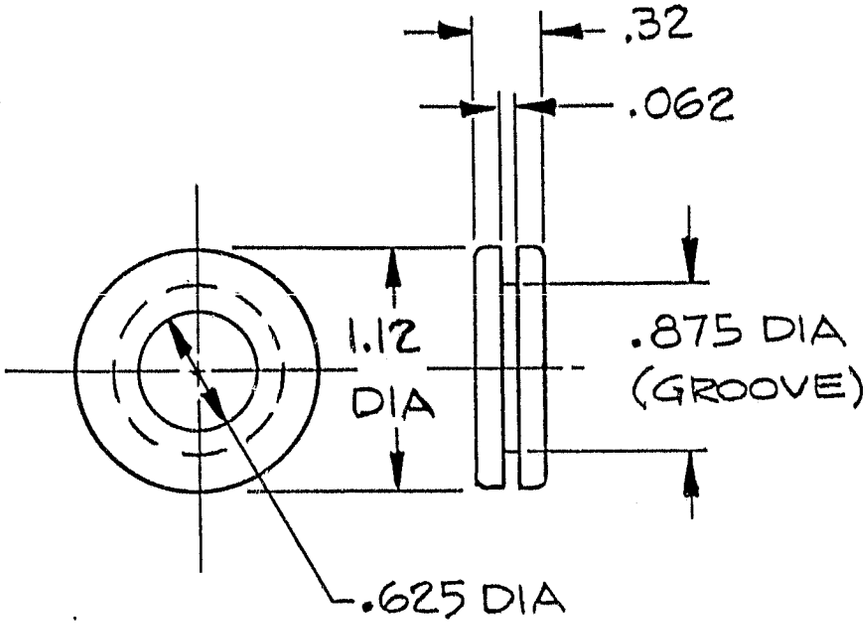

5330 DEBBIE LANE
SANTA BARBARA, CALIF. 93111
PHONE 964 8693

ELCAM, INC.

Contractors License No. 290399

TOLERANCES	REVISIONS			PART NUMBER		
UNLESS OTHERWISE SPECIFIED DECIMAL .XX ± 0.03 .XXX ± 0.015 ANGULAR ± DRAFT	NO	DATE	BY	CP10		
	1			PART NAME RUBBER GROMMET		
	2					
	3			DRAWN BY THOMSON	SCALE FULL	MATERIAL SEE NOTE 1
	4			CHK'D	DATE 14 NOV 76	DRAWING NO ESP-C10
	5	131		TRACED	APP'D	

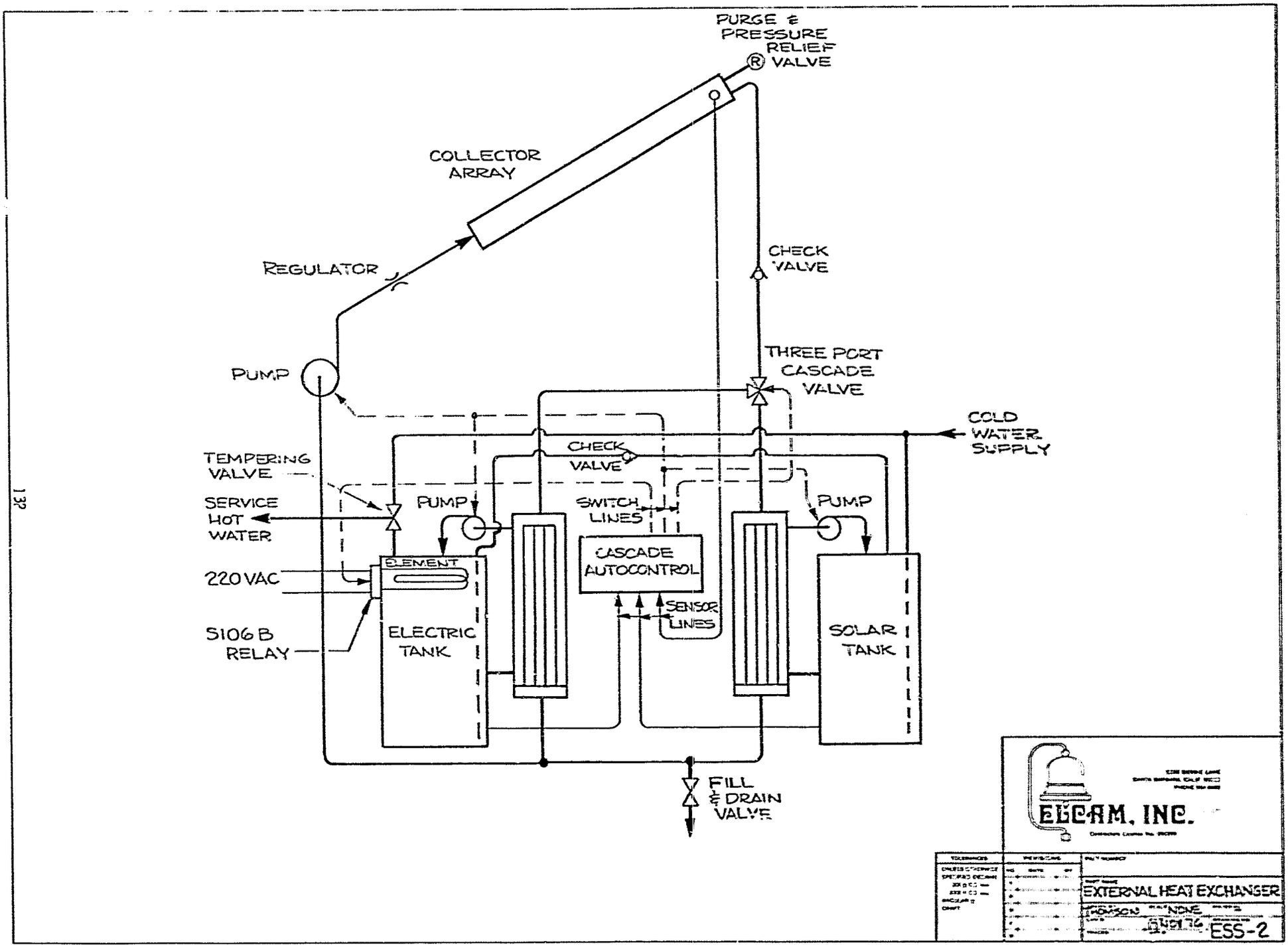
PURGE & PRESSURE RELIEF VALVE
COLLECTOR ARRAY
REGULATOR
CHECK VALVE
PUMP
THREE PORT CASCADE VALVE
COLD WATER SUPPLY
CHECK VALVE
TEMPERING VALVE
SERVICE HOT WATER
PUMP
SWITCH LINES
PUMP
ELEMENT
CASCADE AUTOCONTROL
220 VAC
SENSOR LINES
5106 B RELAY
ELECTRIC TANK
SOLAR TANK
FILL & DRAIN VALVE
ELCAM, INC.
EXTERNAL HEAT EXCHANGER
NONE
ESS-2

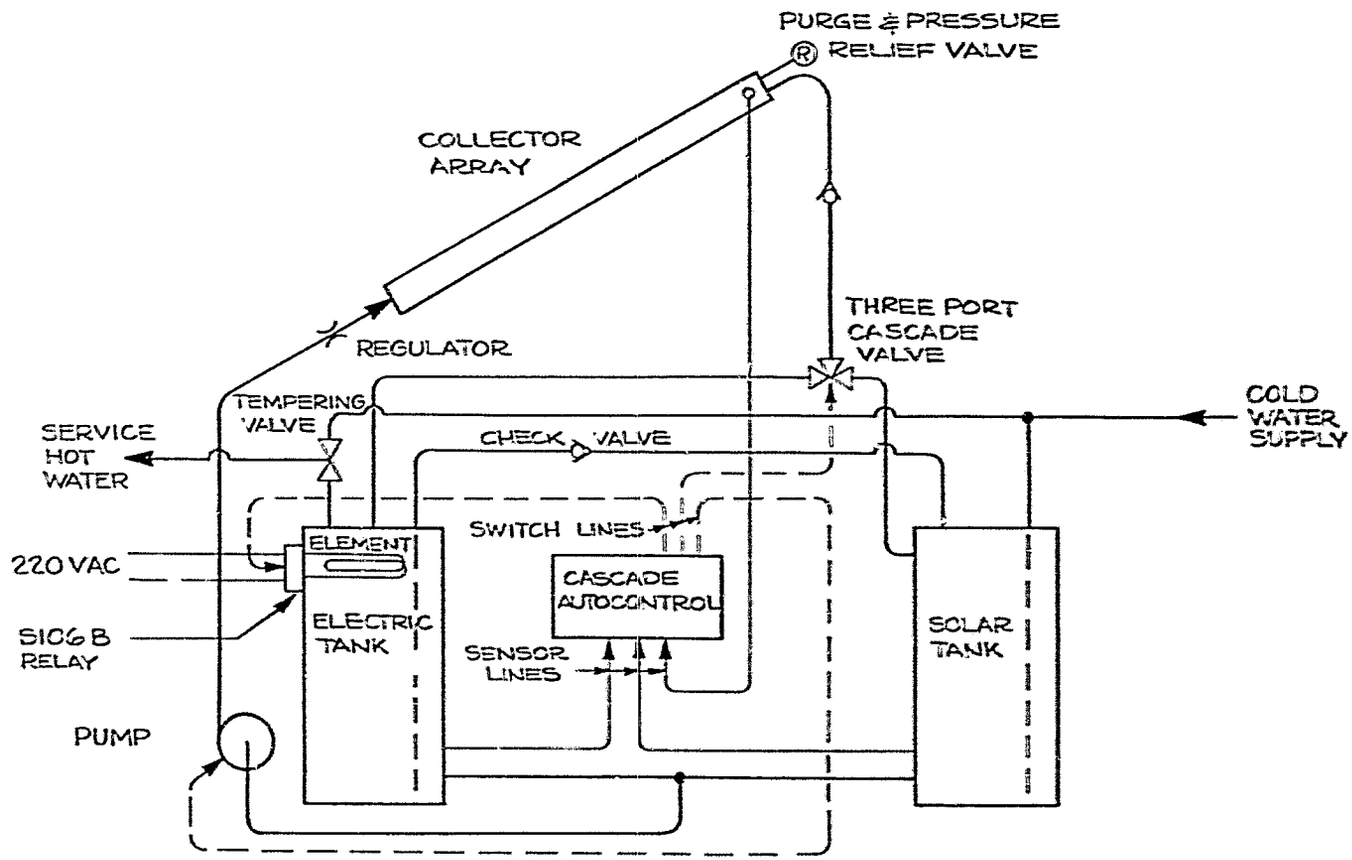

ELCAM, INC.

DIRECT HEATING SYSTEM

ESS-3

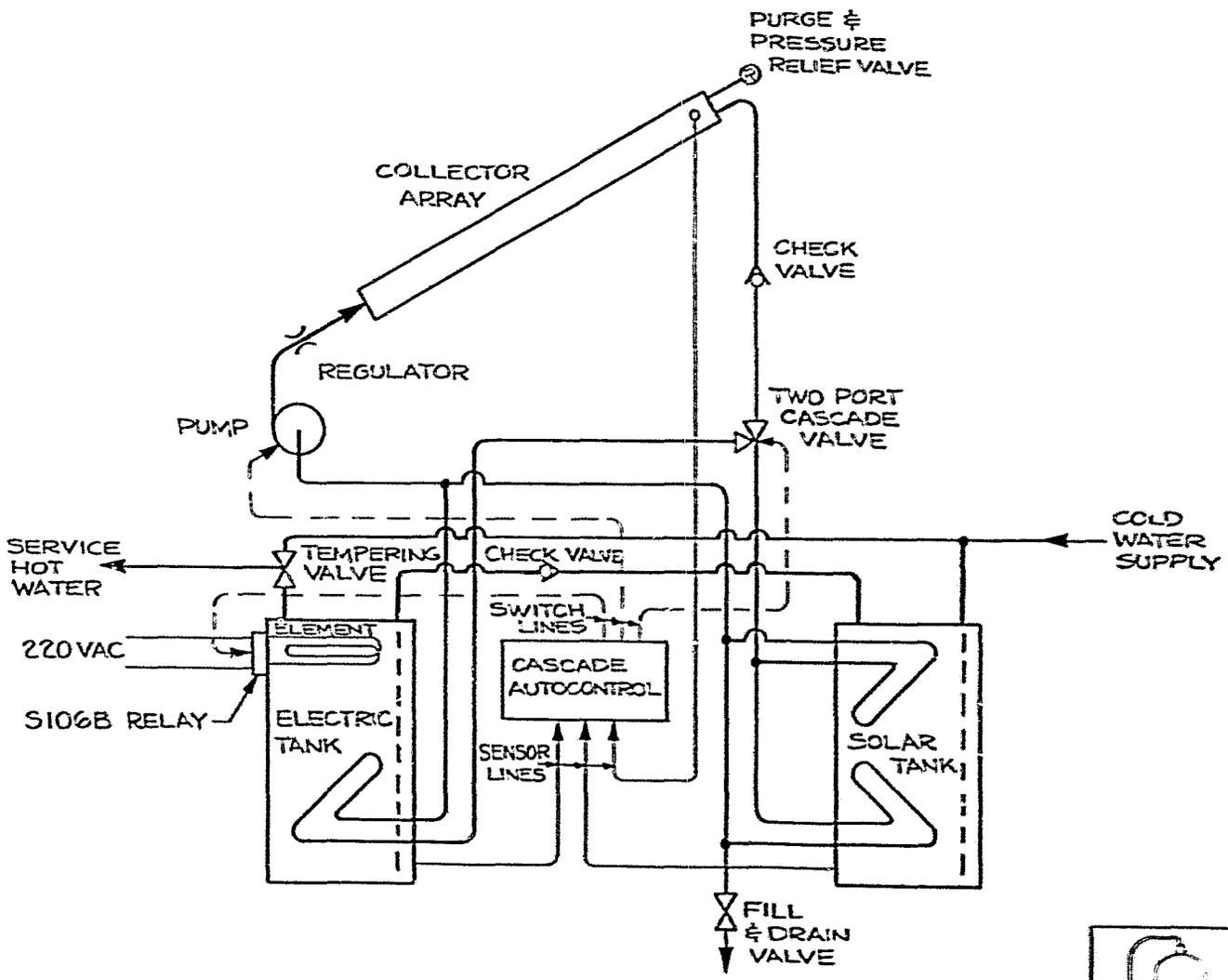

ELCAM, INC.

INTERNAL HEAT EXCHANGER

NONE

ESS-1

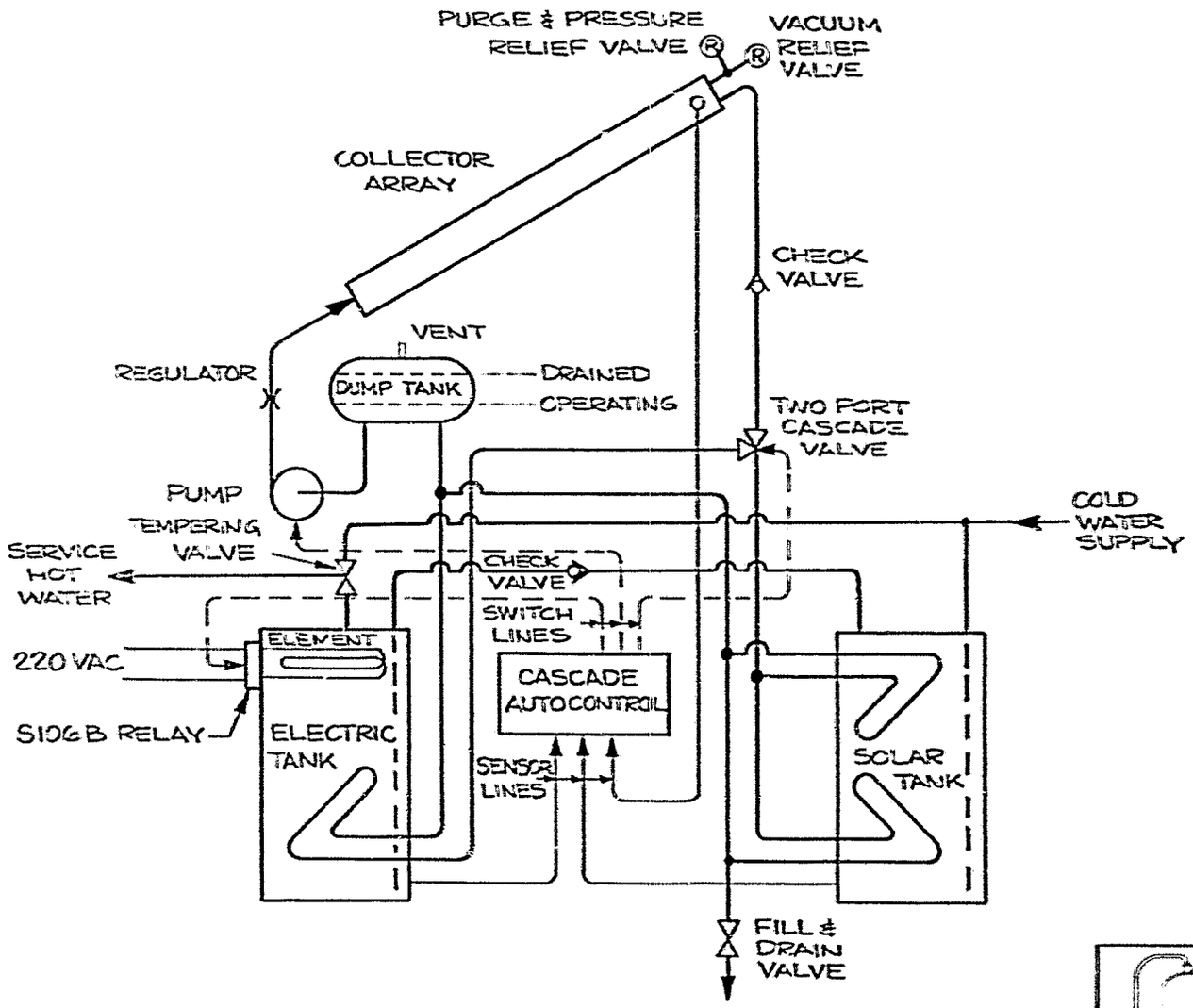

ELCAM, INC.

DUMP TANK WITH INTERNAL HEAT EXCHANGER

NONE

ESS-4

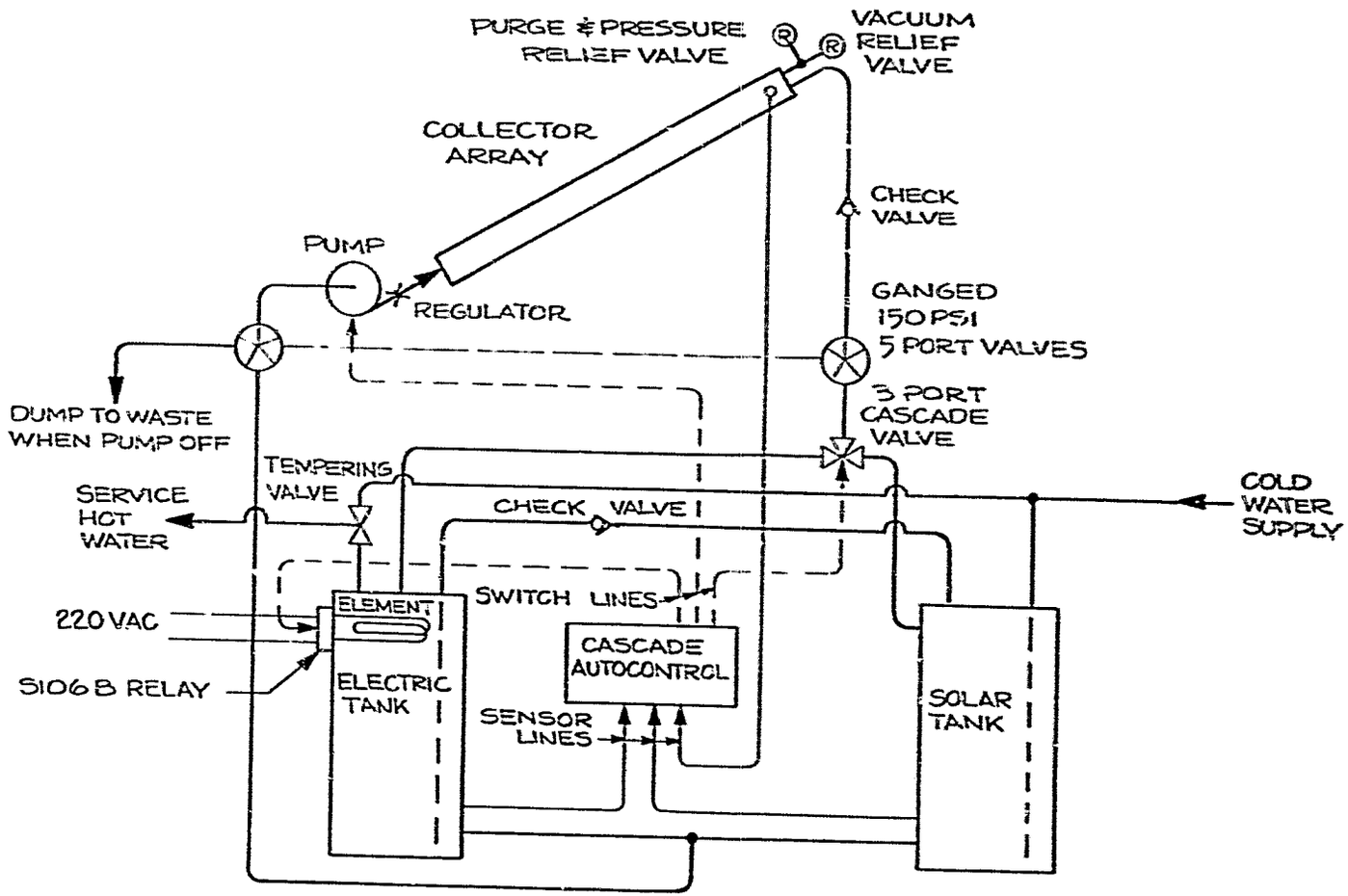

ELCAM, INC.

DIRECT DUMP OPTION

ESS-5

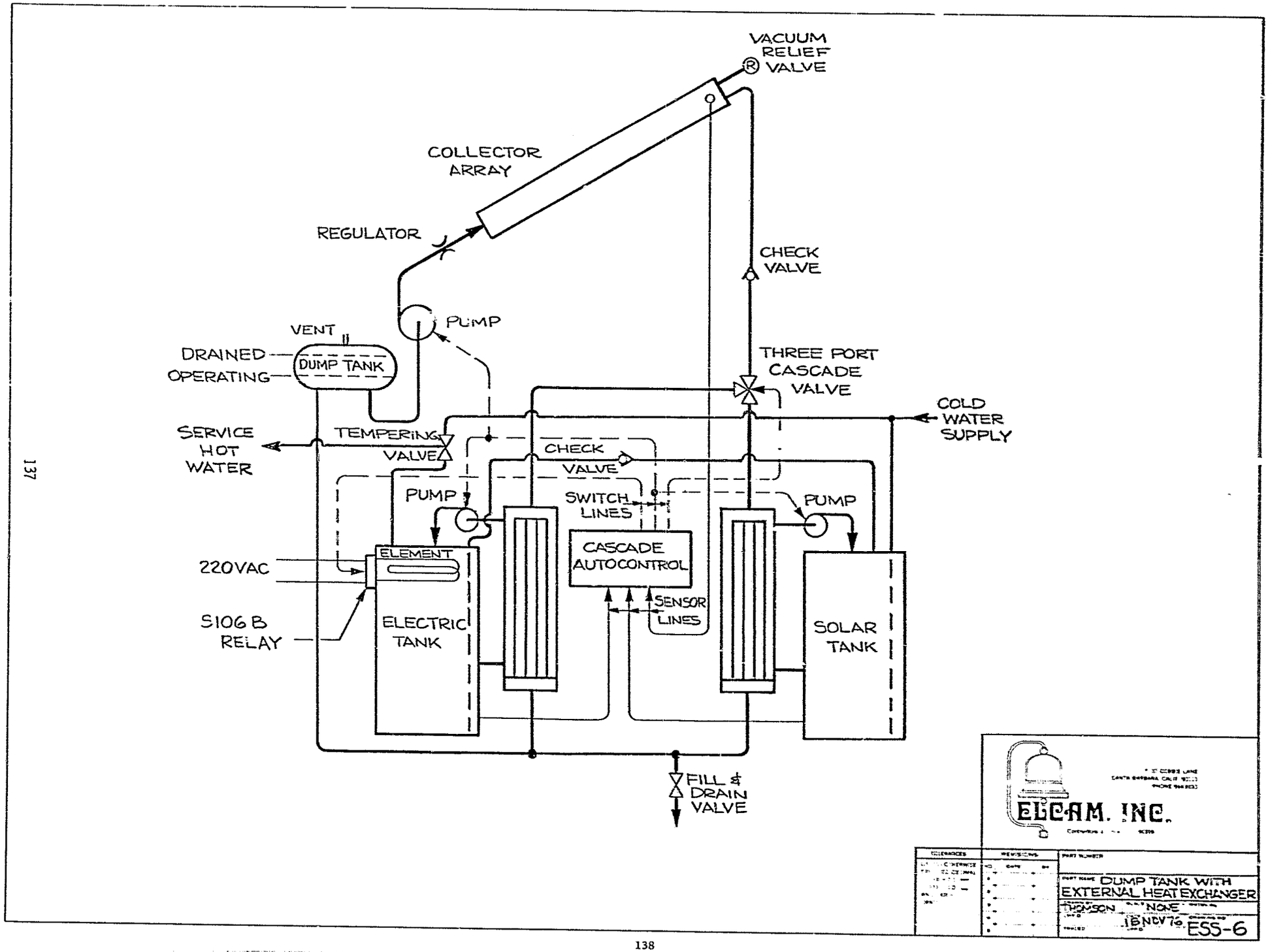
VACUUM RELIEF VALVE
COLLECTOR ARRAY
REGULATOR
CHECK VALVE
PUMP
VENT
DRAINED
OPERATING
DUMP TANK
THREE PORT CASCADE VALVE
COLD WATER SUPPLY
SERVICE HOT WATER
TEMPERING VALVE
CHECK VALVE
PUMP
SWITCH LINES
PUMP
ELEMENT
220VAC
CASCADE AUTOCONTROL
SENSOR LINES
S106 B RELAY
ELECTRIC TANK
SOLAR TANK
FILL & DRAIN VALVE
ELCAM. INC.
DUMP TANK WITH EXTERNAL HEAT EXCHANGER
THOMSON
NONE
18NOV76
ESS-6

NOTES:

1. MATERIAL:
   COPPER TUBE, ROUND SEAMLESS, HARD DRAWN, TYPE M - OPTION ALLOY 330.

2. ALL SEAMS SHALL BE BRAZED USING UNIBRAZE 45% SILVER ALLOY.

3. PD15 FITTINGS ARE FROM:
   PHELPS - DODGE
   PSCM NO.

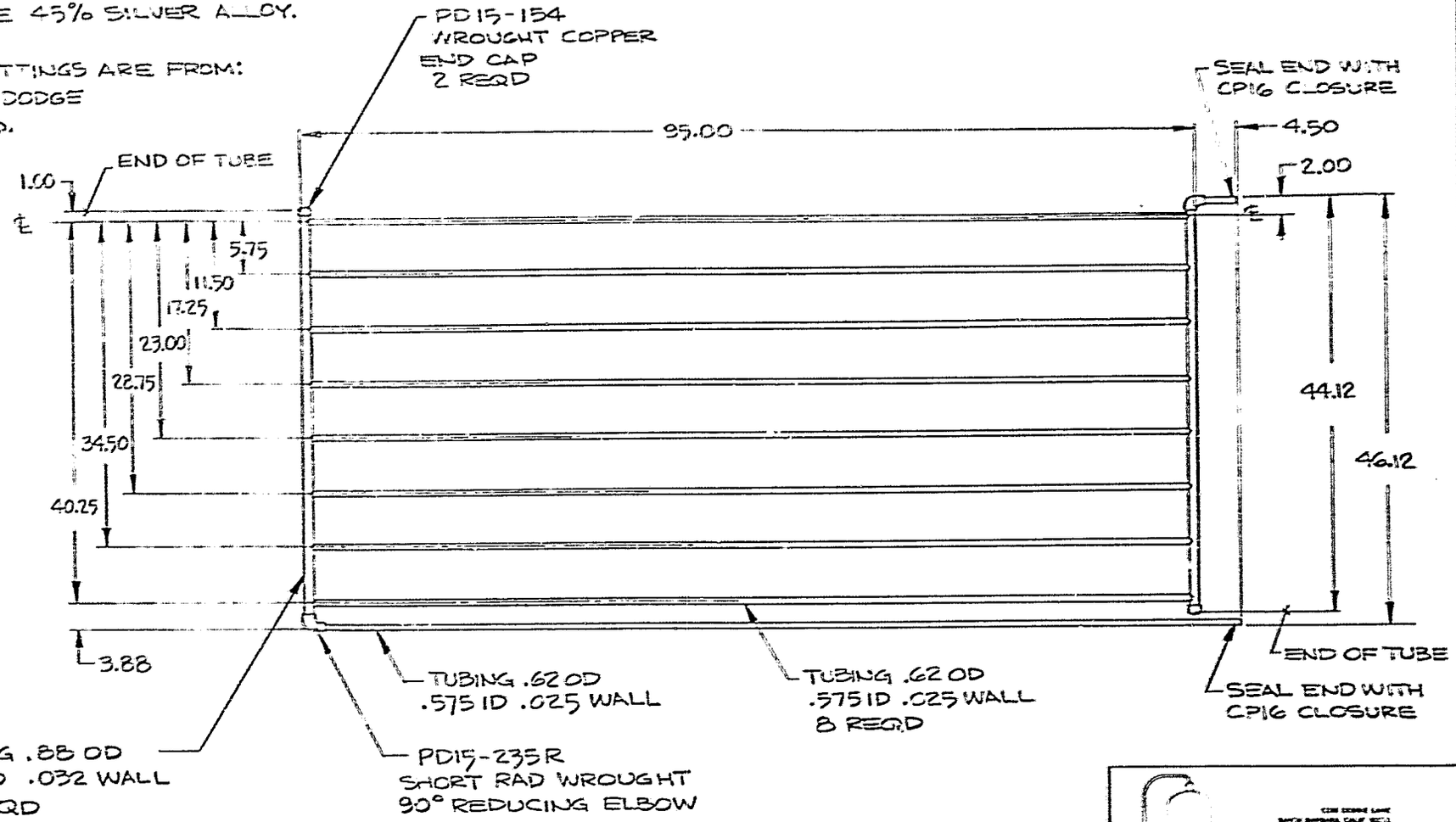

ELCAM, INC.

PART NUMBER	CP2
PART NAME	ABSORBER WATERWAY
SCALE	1/10
DATE	2 Nov 76
DRAWING NO.	ESP-C2

NOTES:

1. MATERIAL:
   ALUMINUM ALLOY EXTRUSION
   CMPSN 6063 TEMPER T5
   DIE SECTION 67026-A

2. VENDOR:
   REYNOLDS METALS CO.
   FSCM NO.

3. PROTECTIVE FINISH:
   ELECTRODEPOSITED
   COMMERCIAL DARK
   BROWN

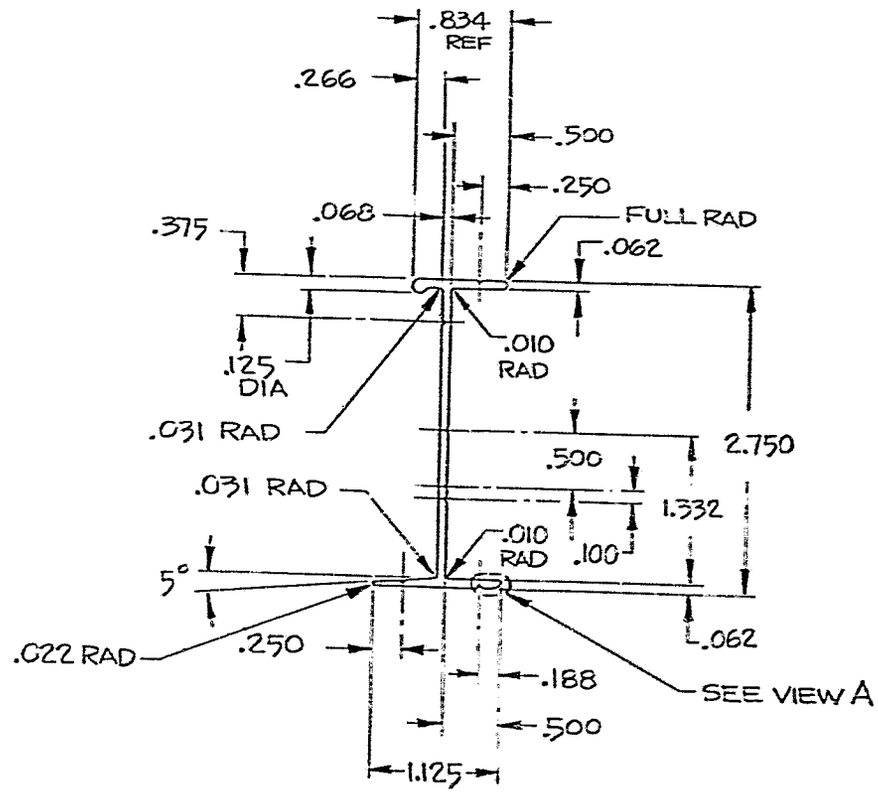

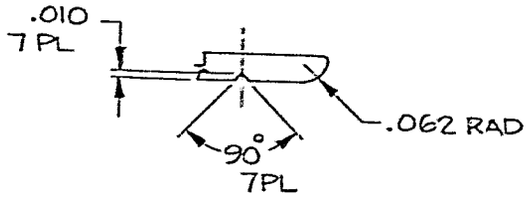

VIEW A
SCALE: 4/1

ELCAM, INC.

	CP3
	SIDE CHANNEL
	FULL SEE NOTE 1
	13 NOV 76 ESP-C3

NOTES:

1. MATERIAL:
   ALUMINUM ALLOY EXTRUSION
   CMPSN 6063 TEMPER T6
   DIE SECTION NO. 67025

2. VENDOR:
   REYNOLDS METALS CO.
   FSCM NO.

3. PROTECTIVE FINISH:
   ELECTRO-DEPOSITED
   COMMERCIAL DARK
   BROWN

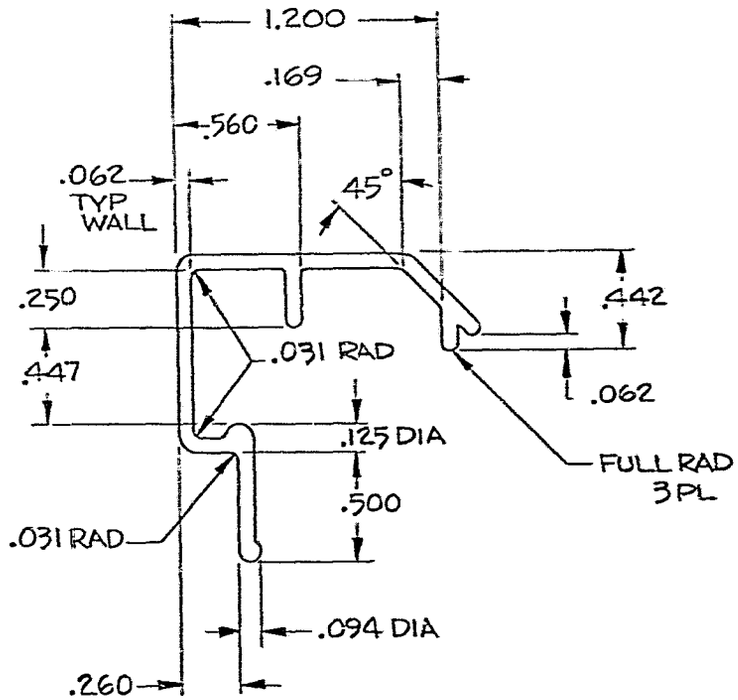

ELCAM, INC.

TOLERANCES	REVISIONS	PART NUMBER CP4
UNLESS OTHERWISE SPECIFIED DECIMAL .XX ± .03 .XXX ± .03 ANGULAR ±		PART NAME COVE STRIP
DRAFT VENDORS STD TOL APPLY		DRAWN BY THOMSON SCALE 2/1 SEE NOTE 1
		DATE 13 NOV 76 DRAWING NO. ESP-C4

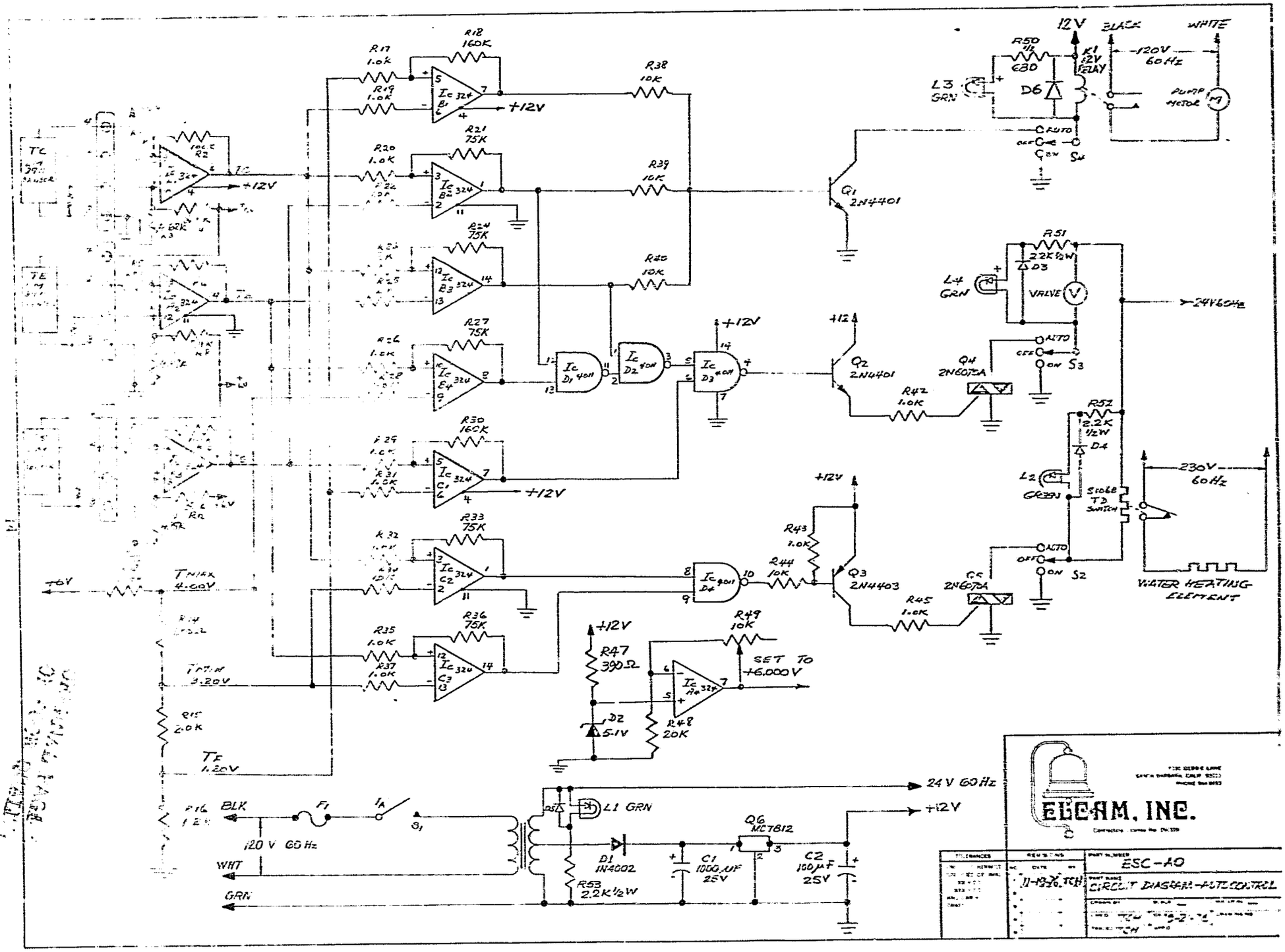

12V
BLACK
WHITE
R50 1/2 680
K1 12V RELAY
120V 60Hz
PUMP MOTOR
L3 GRN
D6
AUTO
OFF
ON
S4
R17 1.0K
R18 160K
R19 1.0K
R38 10K
R20 1.0K
R21 75K
R39 10K
R24 75K
R40 10K
R27 75K
R30 160K
R33 75K
R35 1.0K
R36 75K
R37 1.0K
+12V
Q1 2N4401
Q2 2N4401
Q3 2N4403
Q4 2N6075A
Q5 2N6075A
R42 1.0K
R43 1.0K
R44 10K
R45 1.0K
R51 2.2K 1/2W
D3
L4 GRN
VALVE
24V 60Hz
S3
R52 2.2K 1/2W
D4
L2 GR3BN
S106B TD SWITCH
230V 60Hz
S2
WATER HEATING ELEMENT
R47 390Ω
D2 5.1V
R48 20K
R49 10K
SET TO +6.000V
TMAX 4.00V
TMIN 3.20V
R15 2.0K
TF 1.20V
BLK
WHT
GRN
120 V 60 Hz
F1
S1
L1 GRN
D1 1N4002
R53 2.2K 1/2W
C1 1000 µF 25V
Q6 MC7812
C2 100µF 25V
24 V 60 Hz
ELCAM, INC.
ESC-AO
CIRCUIT DIAGRAM-AUTOCONTROL

NOTES:

1. MATERIAL:
   ALUMINUM ALLOY EXTRUSION
   CMPSN 6063 TEMPER T5
   DIE SECTION 66890

2. VENDOR:
   REYNOLDS METALS CO.
   FSCM NO.

3. PROTECTIVE FINISH:
   CHEM FILM (ALODINE) ENTIRE
   PART, FINISH COAT WITH MARTIN NO.23
   (LUSTERLESS BLACK) ON
   INDICATED AREA.

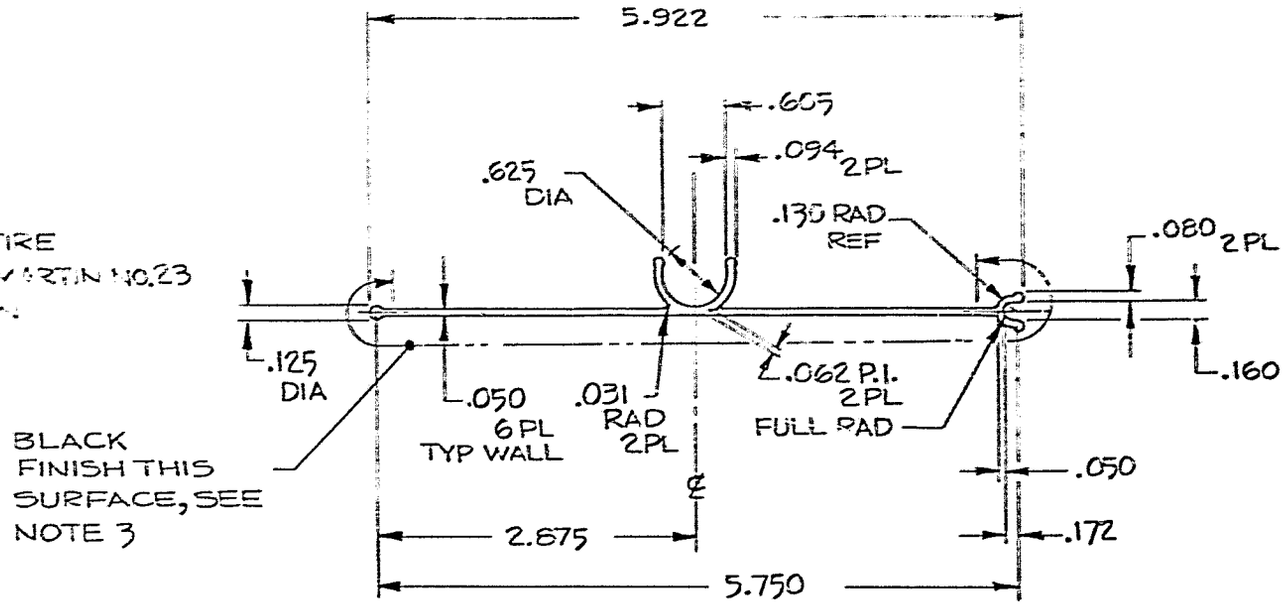

ELCAM, INC.

PART NUMBER	CP1
PART NAME	ABSORBER SNAP FIN
DRAWN	THOMSON
SCALE	FULL
DATE	12 NOV 76
DRAWING NO.	ESP-C1
TOLERANCES	VENDOR'S STD TOL APPLY

NOTES:

1. MATERIAL:
   ALUMINUM ALLOY EXTRUSION
   CMPSN 6063 TEMPER T5
   DIE SECTION NO.

2. VENDOR:

3. PROTECTIVE FINISH:
   ELECTRO-DEPOSITED
   COMMERCIAL DARK
   BROWN

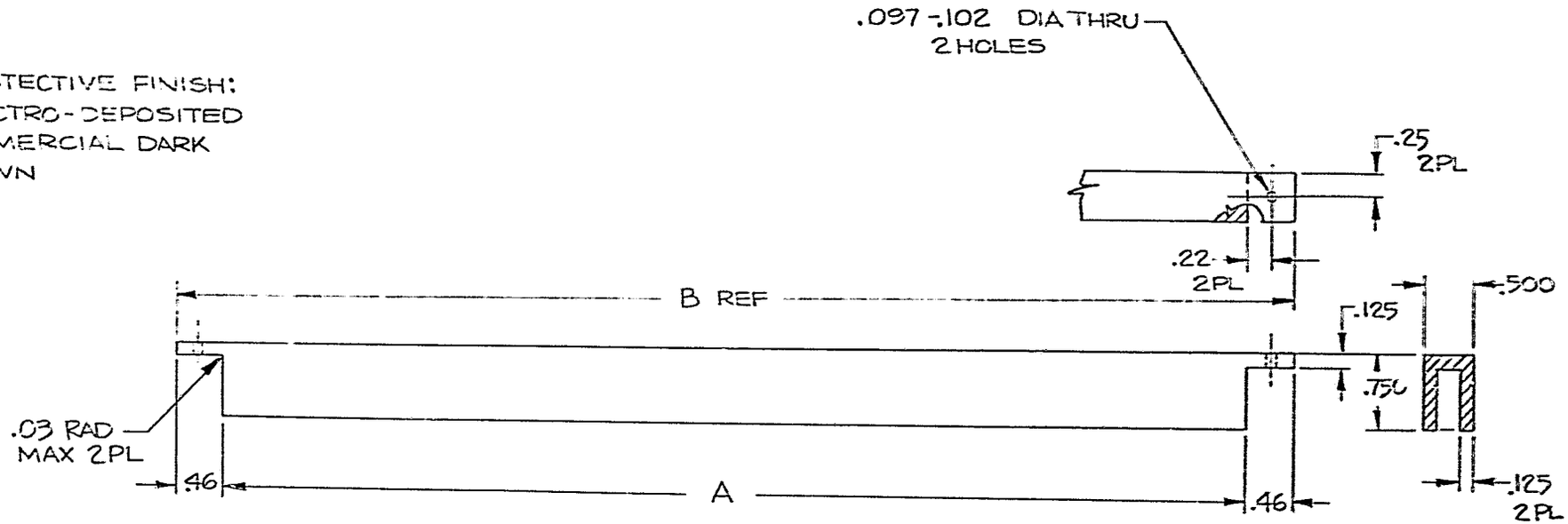

TABLE I

PART NO.	NOTCHED LENGTH A	CUT LENGTH B REF	REMARKS
CP5-001	47.38	48.30	

ELCAM, INC.

CP5

CROSS CHANNEL

PULL SEE NOTE 1

ESP-C5

NOTES:

1. MATERIAL:
   ALUMINUM ALLOY EXTRUSION
   CMPSN 6063 TEMPER T5
   DE SECTION NO. 67106

2. VENDOR:
   REYNOLDS METALS CO.
   FSCM NO.

3. PROTECTIVE FINISH:
   CHEM FILM (ALODINE) ENTIRE PART,
   COAT INDICATED AREA WITH
   MARTIN NO. 4 (LUSTERLESS BLACK)
   AIRDRY.

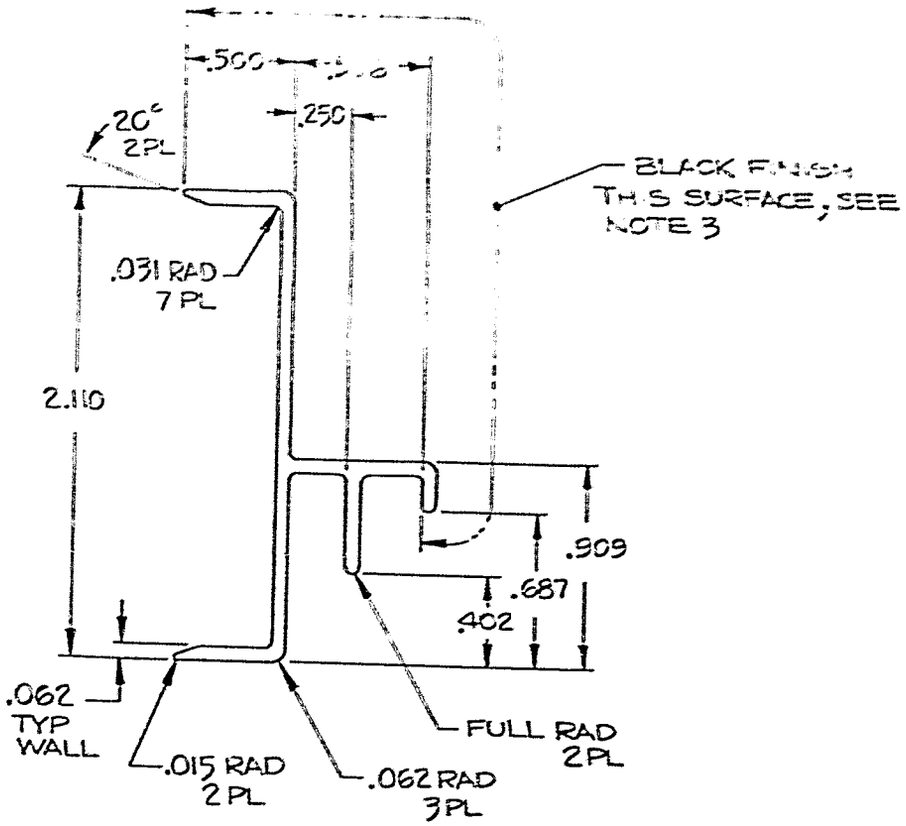

ELCAM, INC.

VENDORS STD TO-APPLY	REVISIONS	PART NUMBER CP6
		PART NAME ABSORBER RESTRAINT
		SCALE 2/1 SEE NOTE 1
		DATE 3 NOV 76 ESP-06

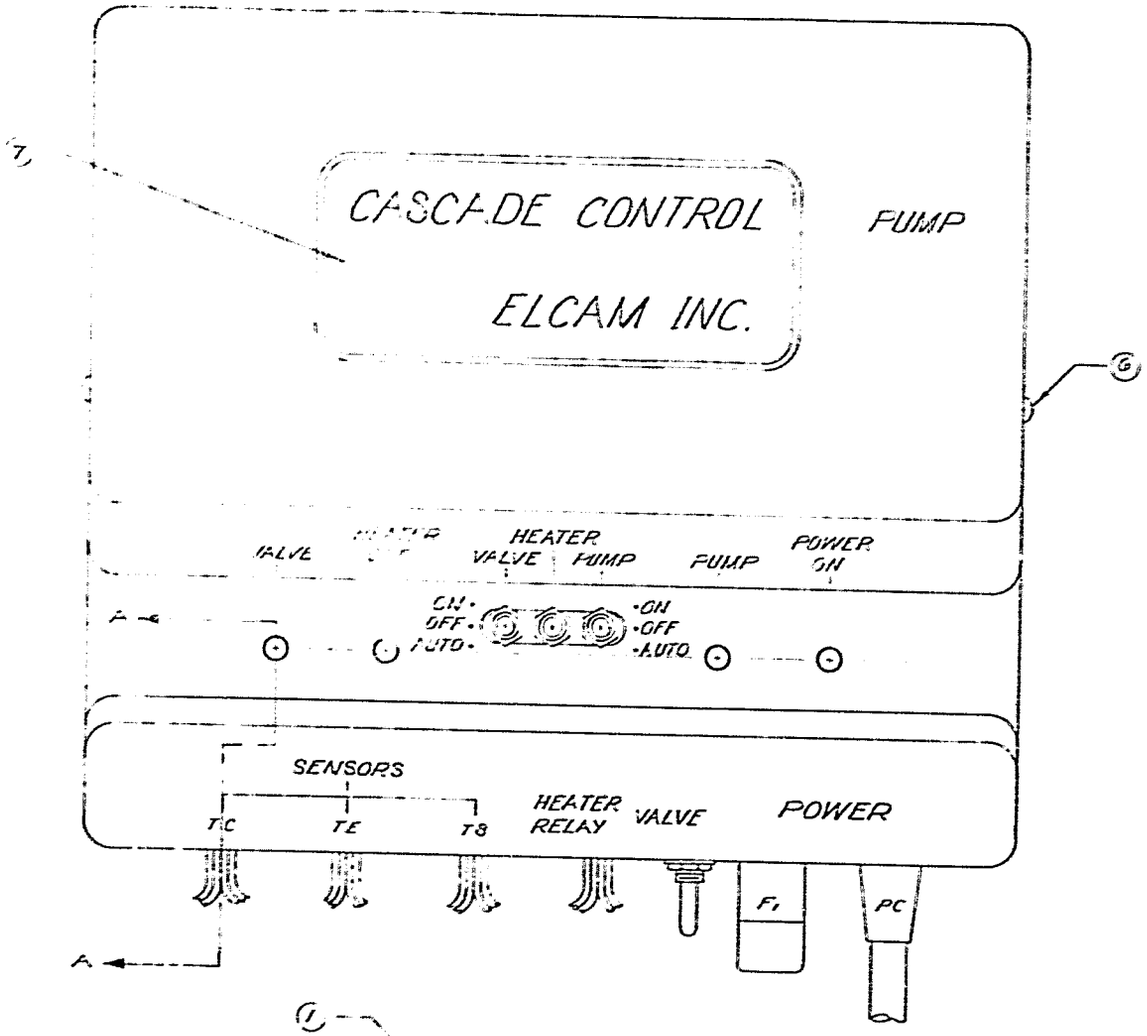

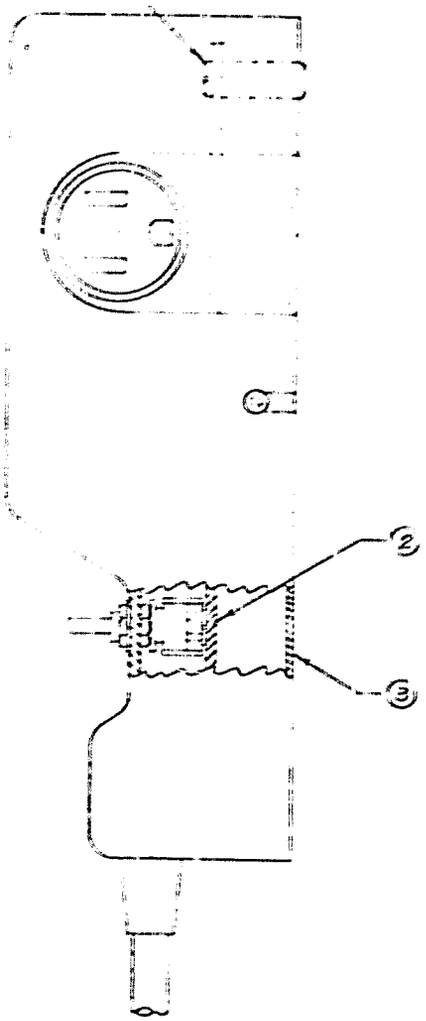

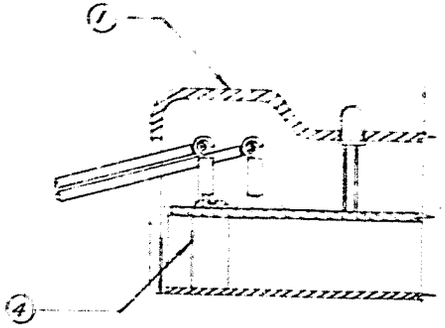

ITEM	PART NO.	DESCRIPTION	QTY
1	Y5280-2	COVER	1
2	Y5280-2A	CIRCUIT BOARD ASSY	1
3	Y5280-4	BASE PLATE	1
4	Y5280-41	STAND OFF	5
5	Y5280-40	SCREW	5
6	68-0708-0	SCREW	2
7	Y5280-50	LOGO	1

SECTION A-A

ELCAM, INC.

ASSEMBLY

9-22-76

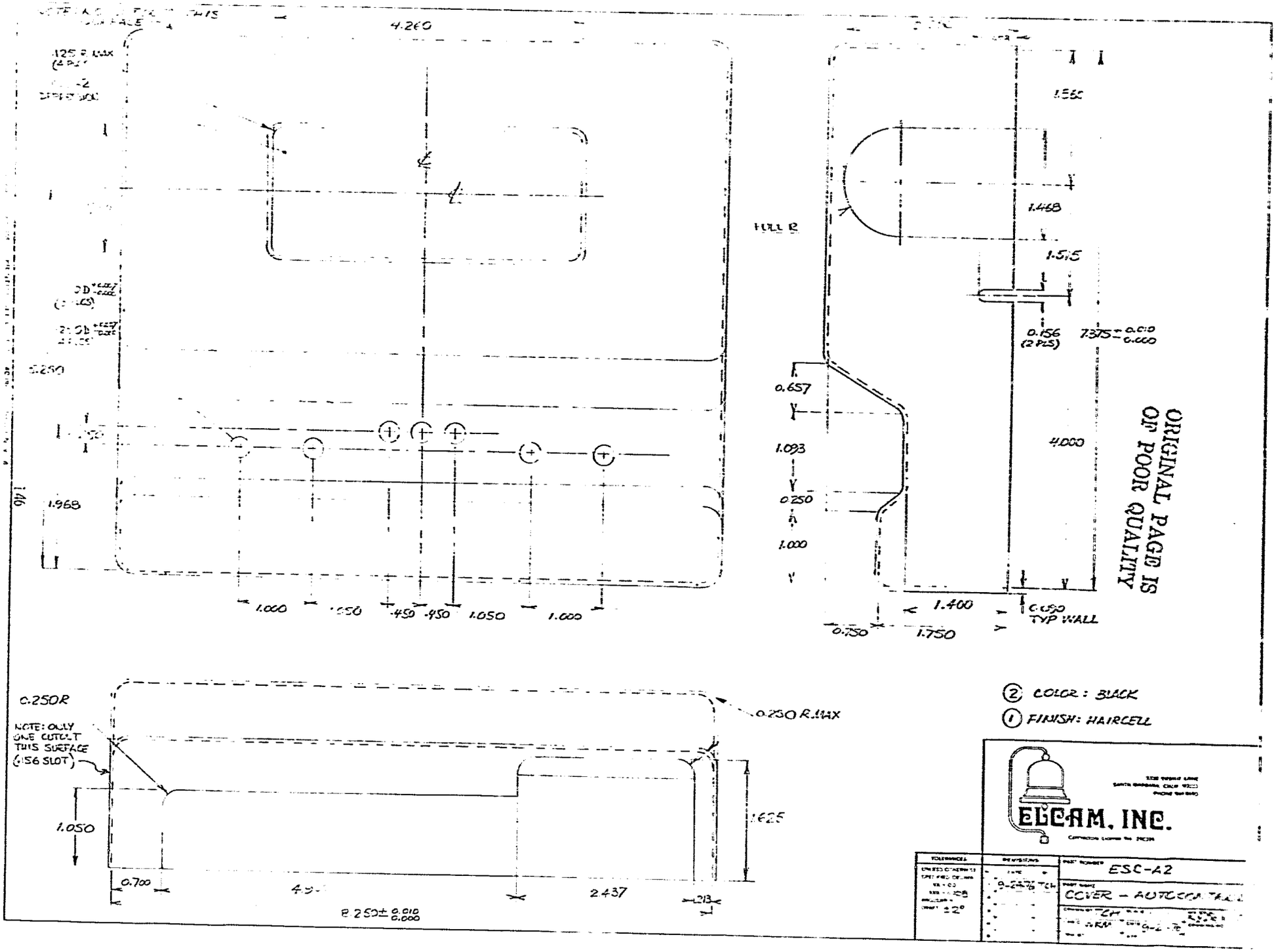

ORIGINAL PAGE IS OF POOR QUALITY