General Disclaimer

One or more of the Following Statements may affect this Document

- This document has been reproduced from the best copy furnished by the organizational source. It is being released in the interest of making available as much information as possible.

- This document may contain data, which exceeds the sheet parameters. It was furnished in this condition by the organizational source and is the best copy available.

- This document may contain tone-on-tone or color graphs, charts and/or pictures, which have been reproduced in black and white.

- This document is paginated as submitted by the original source.

- Portions of this document are not fully legible due to the historical nature of some of the material. However, it is the best reproduction available from the original submission.

Produced by the NASA Center for Aerospace Information (CASI)

NASA Technical Memorandum 81659

(NASA-TM-81659) SELF-ACTING GEOMETRY FOR NONCONTACT SEALS (NASA) 19 p HC A02/MF A01 CSCL 11A
N81-16474
Unclas
G3/37 41170

Self-Acting Geometry for Noncontact Seals

G. P. Allen
Lewis Research Center
Cleveland, Ohio

Prepared for the
Annual Meeting of the
American Society of Lubrication Engineers
Pittsburgh, Pennsylvania, May 11-14, 1981

FEB 1981
RECEIVED
NASA STI FACILITY
ACCESS DEPT.

NASA

SELF-ACTING GEOMETRY FOR NONCONTACT SEALS

by G. P. Allen

National Aeronautics and Space Administration

Lewis Research Center

Cleveland, Ohio 44135

E-473

SUMMARY

Two self-acting seal designs for a LOX turbopump were analyzed in order to predict performance. A radial face seal to seal LOX at 310 N/cm^2 and 32 000 rpm (130 m/sec) was analyzed for pressure differentials of 172 to 448 N/cm^2 and speeds from 98 to 147 m/sec. A segmented circumferential seal to seal helium at 34.5 or 69 N/cm^2 and 157 m/sec was analyzed for pressures of 35 to 86 N/cm^2 (10 N/cm^2 ambient) and speeds from 94 to 189 m/sec.

The analyses predicted noncontact operation near the design speed and pressure; test results confirmed these predictions. Good qualitative agreement between test and analysis was found despite shortcomings of the analytical models used. The face seal evidently operated with mostly liquid in the self-acting geometry and mostly gas across the dam.

INTRODUCTION

Turbopump seals in liquid propellant engines must be capable of operation at high speeds and pressures. Leakage rates of sealed fluids must be low despite extreme operating conditions.

An example is a LOX turbopump seal system design. Mixing of oxidizer (LOX) and turbine gas (hydrogen rich steam) is prevented by a shaft seal package between turbine and pump. The package (schematic in Fig. 1) consists of an oxidizer seal, purge gas (He) seals and hot turbine gas seals.

The oxidizer seal is a radial face seal with a piston ring secondary seal. The other seals are segmented circumferential seals.

A 600 rps capability means speeds of 147 m/sec at the face seal and 189 m/sec at the circumferential seals. Pressures are up to 310 N/cm^2 for the oxidizer seal and up to 69 N/cm^2 for the purge seals.

Prior technology has depended on rubbing contact seals for minimum leakage rates. But successful extended period operation of rubbing contact seals is restricted to relatively low values of sealed pressure times speed. Rubbing contact causes thermal distortion and wear. Face seals have operated successfully for extended periods to 276 N/cm^2 and to 52 m/sec (1). This is well short of the required capability as indicated in Fig. 2. Rubbing causes the same problems and similar limitations (1) for circumferential seals.

A common solution to the disadvantages of rubbing contact seals has been the use of labyrinth seals. However labyrinth seals with sufficient clearance to avoid contact due to vibration, eccentricity, etc. have relatively large leakage rates.

A solution to these problems is the use of close clearance hydrodynamic (self-acting) seals. The addition of self-acting lift pads to radial face or segmented circumferential seals permits noncontact operation (except at start up and shutdown) with minimum leakage. Recent studies (2,3) have predicted and tests (4) have shown successful performance of self acting seals.

This study: (a) predicts performance and (b) compares predicted and actual performance for a face seal and for a circumferential seal (both self-acting). The analytical study covered a speed range of 300 to 600 rps and pressure ranges of 172 to 448 N/cm^2 for the face seal and of 35 to 86 N/cm^2 for the circumferential seal. Test data used covered speeds of

PRECEDING PAGE BLANK NOT FILMED

500 to 600 rps and pressures of 180 to 281 N/cm^2 (face seal) and of 38 to 73 N/cm^2 (circumferential seal).

APPARATUS AND PROCEDURE

Test Seals and Conditions

The face seal (Fig. 3) is a close clearance design with ten shrouded Rayleigh step bearing lift pads. The sealed fluid is at the outside diameter. The seal dam is adjacent to the inside diameter-inside the lift pads. The seal is spring loaded and has a piston ring secondary seal.

The circumferential seal (Fig. 4) also uses shrouded Rayleigh lift pads. The six segments (three pads each) of a complete ring are retained in position by garter springs (radially) and compression springs (axially). The lift pads are adjacent to the sealed pressure and the dams are downstream adjacent to the ambient pressure.

The test apparatus in the vicinity of the seals is as shown in Fig. 1. The nominal test schedule consisted of a rapid (in ~10 sec) acceleration to a target speed and sealed pressures (for each seal), 6 minutes at test conditions and rapid braking. Mean values of speed, temperatures and pressures (sealed and ambient), and leakage rate were reported. Periodic inspections were made to determine the condition of faces and for measurement of any wear.

Seal Analysis

Analysis of the seal dam for both seals was performed using the computer program of Ref. (5). This program includes inertia, viscous effects, entrance loss and choking of compressible flow in the direction of decreasing pressure. However rotational effects (inertia, shear heating) are neglected.

For the pads, two programs were used. Compressible flow was analyzed with a program based on that described in Ref. (5). This program solves the two-dimensional compressible Reynolds lubrication equation in the P^2 form and includes an empirical correction for turbulent flow. For liquid flow in the face seal, an undocumented program based on the Archibald analysis for a rectilinear step slider bearing was used. An obvious shortcoming of this last model is the neglect of the side lands (rails) of the shrouded Rayleigh step actually used.

Analytical predictions for comparison with tests were for clearances at which the opening forces matched the closing forces for the test conditions.

The face seal is a close clearance design with self-acting lift pads. The circumferential seal is a segmented design - also with self-acting lift pads. Dimensions of interest are presented in Table 1 (2) for the face seal and in Fig. 5 (3) for the circumferential seal.

The face seal was analyzed at shaft speeds of 24 000, 28 000, 32 000 and 36 000 rpm (98, 114, 130, 147 m/sec). The sealed fluid was LOX at pressure differentials of 172, 241, 310, 379 and 448 N/cm^2. Temperatures were taken at the corresponding boiling points. Two fluid state cases are presented here: the limiting case of gas throughout pads and dam, and the case of liquid in the pads and gas in the dam. The situation is discussed in Ref. (2).

The circumferential seal was analyzed at shaft speeds of 18 000, 24 000, 30 000 and 36 000 rpm (94, 126, 157, 189 m/sec). The sealed fluid was helium at pressures of 35, 52, 69 and 86 N/cm^2 (10 N/cm^2 ambient) and 18° C.

RESULTS AND DISCUSSION

Analysis

Face seal. - For the fully gas case (Fig. 6(a)), there is little change in clearance with sealed pressure at constant speed. The increased leakage reflects the increasing density due to sealed pressure. At constant pressure the increased clearance results from increased speed and therefore lift force in the pads. The increased clearance is the cause of the increased leakage.

The case of liquid in the pads is presented in Fig. 6(b). There was no analysis for 448 N/cm^2 as vaporization is expected to occur. At constant speed, clearance decreases as pressure increases. Leakage passes through a maximum as the effect of increasing sealed pressure (density) is overcome by the effect of decreasing clearance. At constant pressure difference, clearance and leakage increase as with the all gas case.

Noncontact operation is expected at clearances greater than 0.002 mm. Both cases predict clearances above this minimum over all (Fig. 6(a)) or most (Fig. 6(b)) points analyzed including the design speed (130 m/sec) and pressure difference (310 N/cm^2). This is confirmed by test reports of little or no wear and no surface damage.

Circumferential. - Predictions for two recess depths (showing effect of wear) are presented in Fig. 7. The two depths show essentially the same relations of the various points. Noncontact operation (except at startup and shutdown) is expected.

Since the increments of speed and sealed pressure in Fig. 7 are uniform, it is evident that clearance increased with speed and decreased with pressure. The rate of both changes declined as the independent variable (speed or pressure) rose. The change in clearance due to change in recess

depth decreased appreciably with increasing pressure but increased with increasing speed.

Leakage also increased with speed but went through a maximum as pressure increased. The rate of increase declined as both speed and pressure rose. For increased speed this effect was a result of greater clearance due to a higher opening force. However, for increased pressure the effects of higher density and greater pressure change (driving force) at first outweighed the effect of decreased clearance. The effect of recess depth on leakage increased with speed and decreased with pressure.

Comparison of Analysis and Test

Face seal. - The model used for gas flow across the dam does not consider rotational shear heating and rotationally induced turbulence. The model used for liquid in the pads neglects the presence of the side rails of the pad recesses. One obvious result for both models is prediction of a lower clearance.

In Table 2, the experimental speeds, pressures, and leakages for several test runs are presented together with the analytical results.

The all gas predictions show excellent qualitative agreement being very close to a constant fraction of the estimated leakage. However, even the shortcoming of the dam model appears insufficient to account for the difference between analysis and experiment. Obviously at least a portion of this seal is operating in a liquid condition.

The liquid pad case shows the shortcoming of the model used for analysis of liquid throughout the pads. As is apparent, the relative error increases as the predicted leakage decreases. From this consideration it appears that the pads are not operating in a fully liquid condition.

Circumferential seal. - In the tests wear was measured during periodic inspection of the seals. During a series of checkout runs totaling close to an hour of operation, the seals showed appreciable wear (~2 and 7 μm for the oxidant and fuel sides, respectively). However, the same seal segments showed negligible wear after a further 10 hours of test runs. Evidently, during this 10 hours, there was zero or near-zero wear except during startup and shutdown. Thus, except during the checkout period, the prediction of noncontact at operating conditions is confirmed.

The tests were run with small but significant differences in pressure (sealed and downstream), temperature, and speed. A number of test runs for which these differences should have had little, if any, effect on leakage were selected. Figure 8 shows the effect of pressure drop on leakage rate for the fuel-side seal (7.5-μm recess depth). Predicted results are included for comparison. The reported leakage rates are totals. By using the rule of thumb that half the leakage through a close-clearance seal is through the secondary seal, the actual leakage rate through the seal gap was estimated.

There is considerable data scatter in Fig. 8. However, the general trend of the test data, for this limited pressure-drop range, was about the same as predicted, although the predicted leakage rates were about three times the mean test estimates. Much of this difference was due to neglect of shear heating in the analysis. Higher temperatures increase flow resistance as a result of higher viscosity and lower density (less mass flow for a given volume flow). For a better comparison, the conditions of three tests at different sealed pressures were analyzed. Conditions and results are presented in Table 3.

A least-squares line through the test data in Fig. 8 shows generally good agreement between predicted and measured trends in leakage rate with pressure drop. For both seals, the estimated actual leakage rates are about one-third of the predicted values. Even the highest sealed pressure for the fuel-side seal (Table 3) shows no worse agreement than that shown in Fig. 8.

CONCLUSIONS

Two hydrodynamic seal designs were analyzed over ranges of pressure differential and speed involved in testing the designs. A comparison of analysis and experiment led to the following conclusions:

1. Prediction by analysis that the seals would operate without rubbing contact was confirmed by test results.

2. The face seal evidently operated with mostly liquid in the pads and mostly gas across the dam.

3. Qualitative agreement between predicted and measured trends in leakage rates with pressure drop was found despite shortcomings in the analytical models.

REFERENCES

1. Burcham, R. E. and Keller, R. B. Jr., eds., "Liquid Rocket Engine Turbopump Rotating-Shaft Seals," NASA SP-8121 (1978).
2. Allen, G. P., "Comparison of Analysis and Experiment for Self-Acting Seals for Liquid-Oxygen Turbopumps," NASA TP-1443 (1979).
3. Allen, G. P., "Self-Acting Lift-Pad Geometry for Circumferential Seals - A Noncontacting Concept," NASA TP-1583 (1980).
4. Burcham, R. E. and Boynton, J. L., "Small High-Speed Self-Acting Shaft Seals for Liquid Rocket Engines," Rocketdyne, RI/RD77-195 (1977). NASA CR-135167 (1977).

5. Zuk, J. and Smith, P. J., "Quasi-One-Dimensional Compressible Flow Across Face Seals and Narrow Slots. II: Computer program," NASA TN D-6787 (1972).

6. Zuk, J., Ludwig, L. P., and Johnson, R. L., "Design Study of Shaft Face Seal with Self-Acting Lift Augmentation. I - Self-Acting Pad Geometry," NASA TN D-5744 (1970).

TABLE 1. - NOMINAL SEAL FACE

DIMENSIONS (REF. 2)

Dimension	
A Pad land arc, radians	0.190
B Pad recess arc, radians	0.392
C Pad outside diameter, cm	9.40
D Pad inside diameter, cm	8.17
E Pad outer rail inside diameter, cm	9.29
F Pad inner rail outside diameter, cm	8.28
G Seal dam outside diameter, cm	7.91
H Seal dam inside diameter, cm	7.66
I Pad recess depth, cm	0.0018
-- Balance diameter, cm	7.73

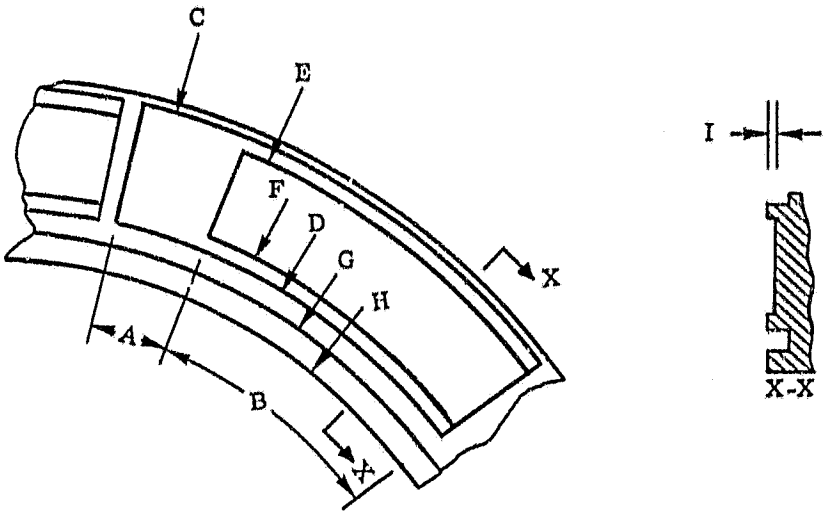

ORIGINAL PAGE IS
OF POOR QUALITY

TABLE 2 - COMPARISON OF PREDICTED AND MEASURED LEAKAGE RATES FOR SELECTED TEST RUNS OF FACE SEAL (REF. 2)

Mean speed of seal dam		Pressure, N/cm^2		Primary seal leakage,[a] kg/min	Predicted leakage for assumed states, kg/min	
rpm/1000	m/sec	Sealed	Ambient		Gas	Intermediate[b]
35.5	145	180	19.0	1.20	.30	.59
32.0	130	223	19.3	1.43	.36	.47
33.6	137	281	22.3	1.83	.49	.49

[a]Estimated as one half of total.
[b]Pads: liquid; dam: gas.

TABLE 3. - COMPARISON OF ESTIMATED ACTUAL AND PREDICTED LEAKAGE THROUGH SEAL GAP OF CIRCUMFERENTIAL SEAL (REF. 3)

Test conditions			Oxidant-side seal[a]			Fuel-side seal[b]		
Sealed pressure, N/cm^2	Sealed temperature, K	Speed, m/sec	Downstream pressure, N/cm^2	Experimental leakage, g/sec (c)	Predicted leakage, g/sec	Downstream pressure, N/cm^2	Experimental leakage, g/sec (c)	Predicted leakage, g/sec
76.33	294	157.6	25.65	0.129	0.380	10.55	0.045	0.260
42.54	294	157.4	25.99	.065	.256	12.00	.060	.160
37.58	293	157.6	24.96	.114	.232	12.17	.058	.145

[a]15-μm recess depth.
[b]7.5-μm recess depth.
[c]Estimated as one-half the measured total.

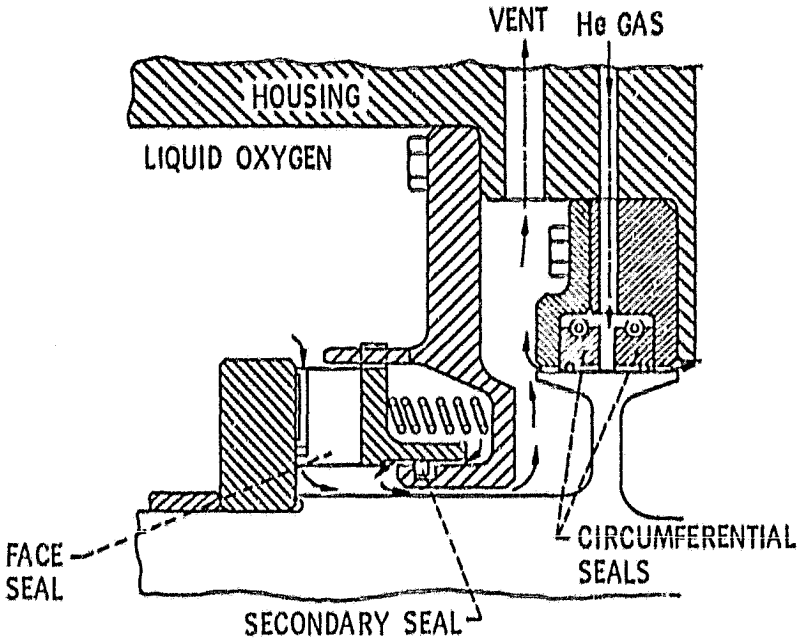

Figure 1. - Schematic of LOX turbopump seal system for advanced engine. (ref. 2)

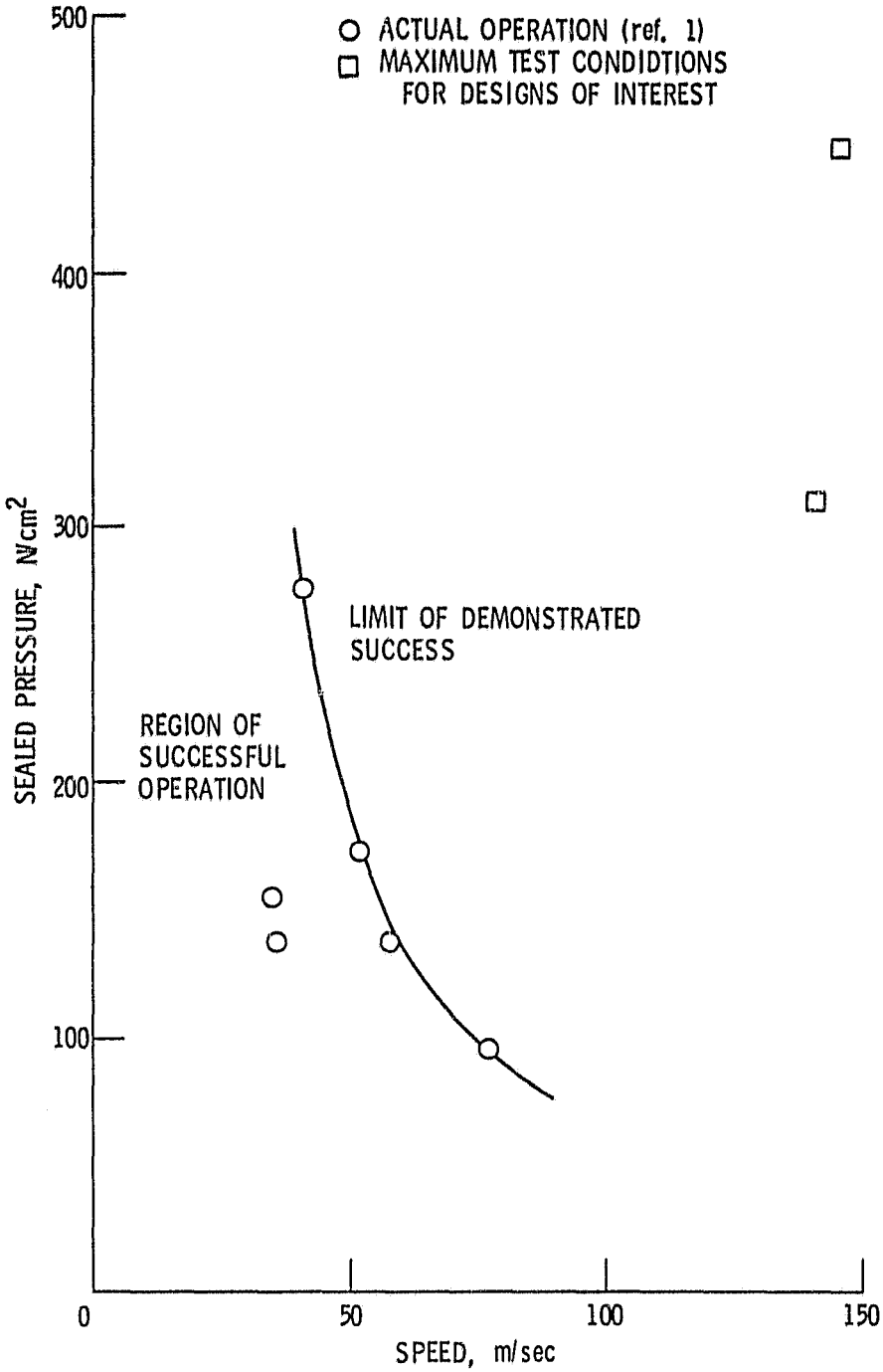

Figure 2. - Required speeds and sealed pressures compared during successful operation for extended periods in sealing of LOX by contact face seals. (ref. 2)

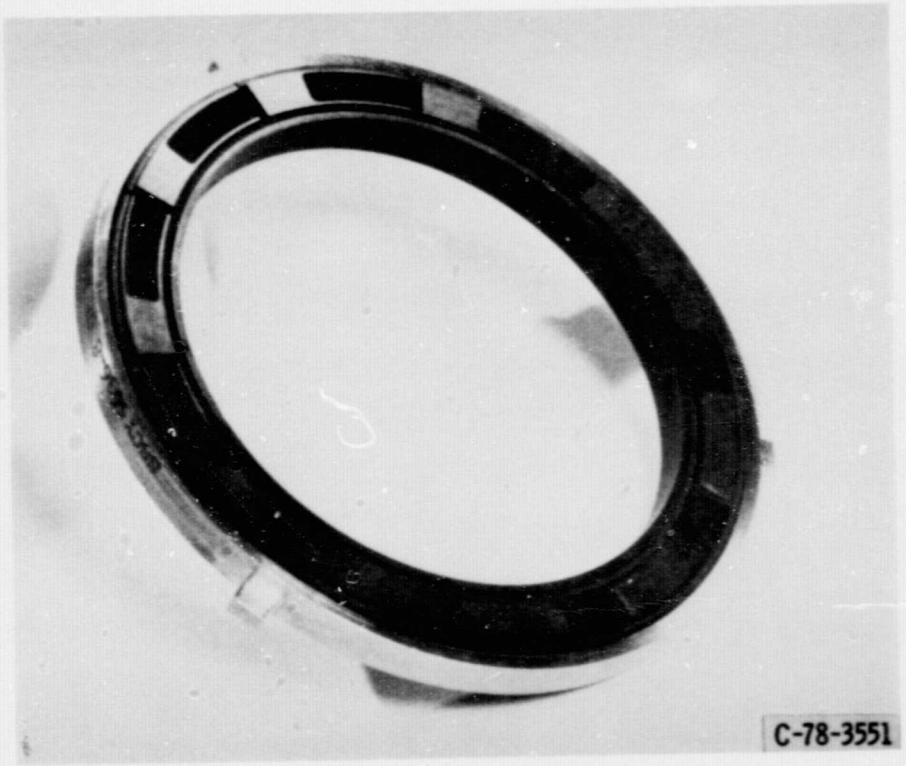

Figure 3. - Face seal with self-acting geometry.

Figure 4. - Circumferential test seal with self-acting lift geometry (two carbon segmented rings).

ORIGINAL PAGE IS
OF POOR QUALITY

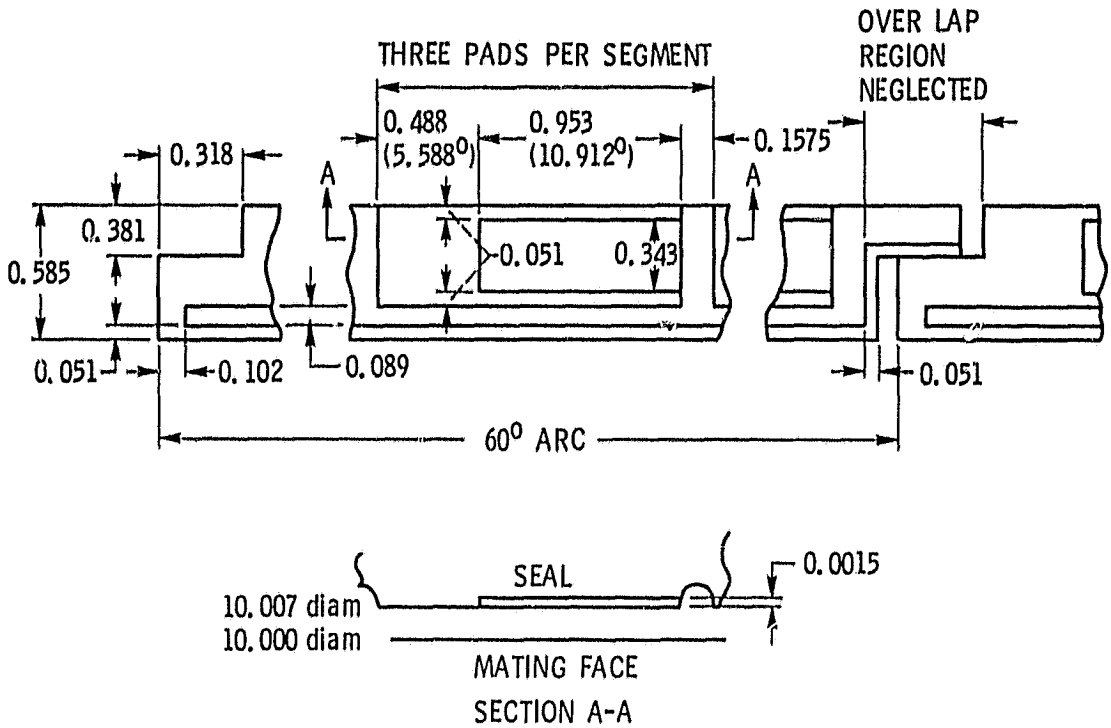

Figure 5. - Nominal dimensions of circumferential seal
(All dimensions are in centimeters.) (ref. 3)

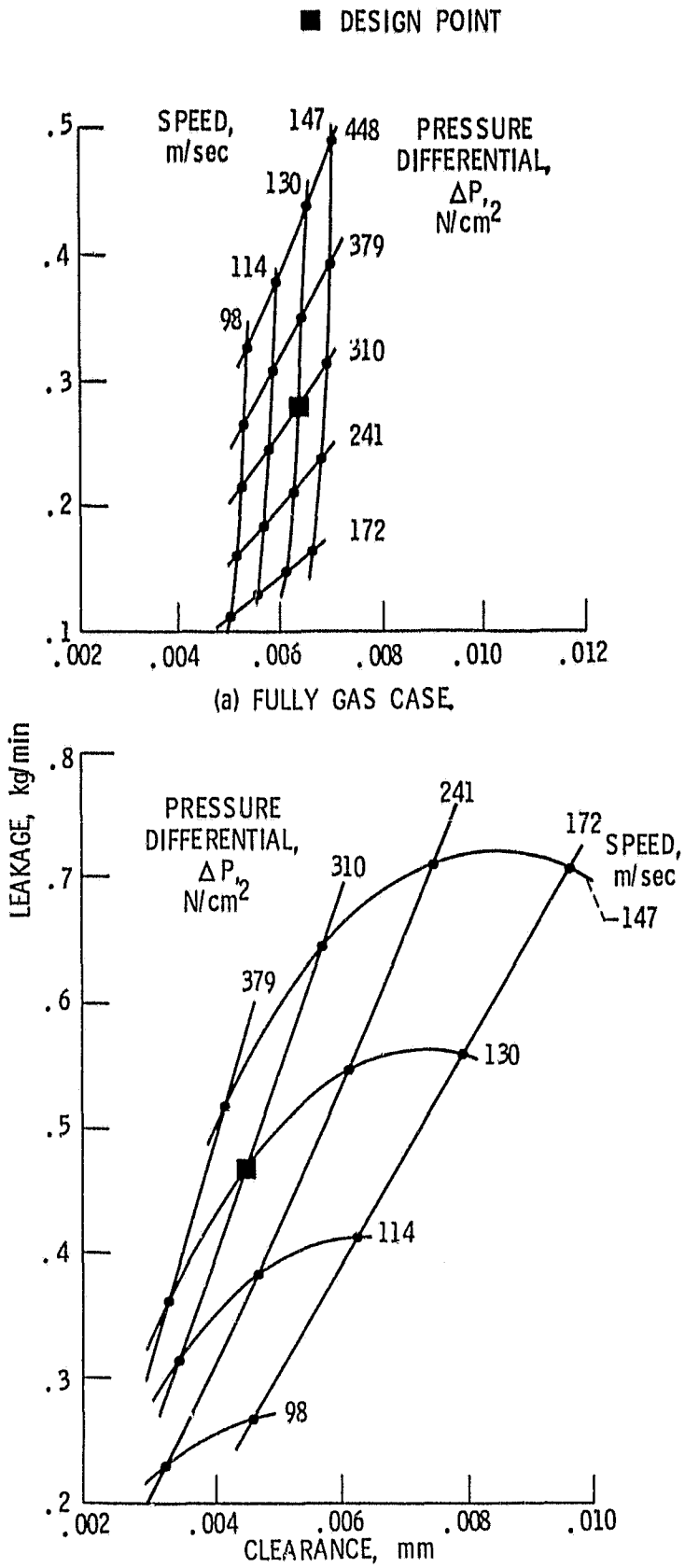

Figure 6. - Predicted seal performance for face seal. LOX at several speeds and pressure differentials. (ref. 2)

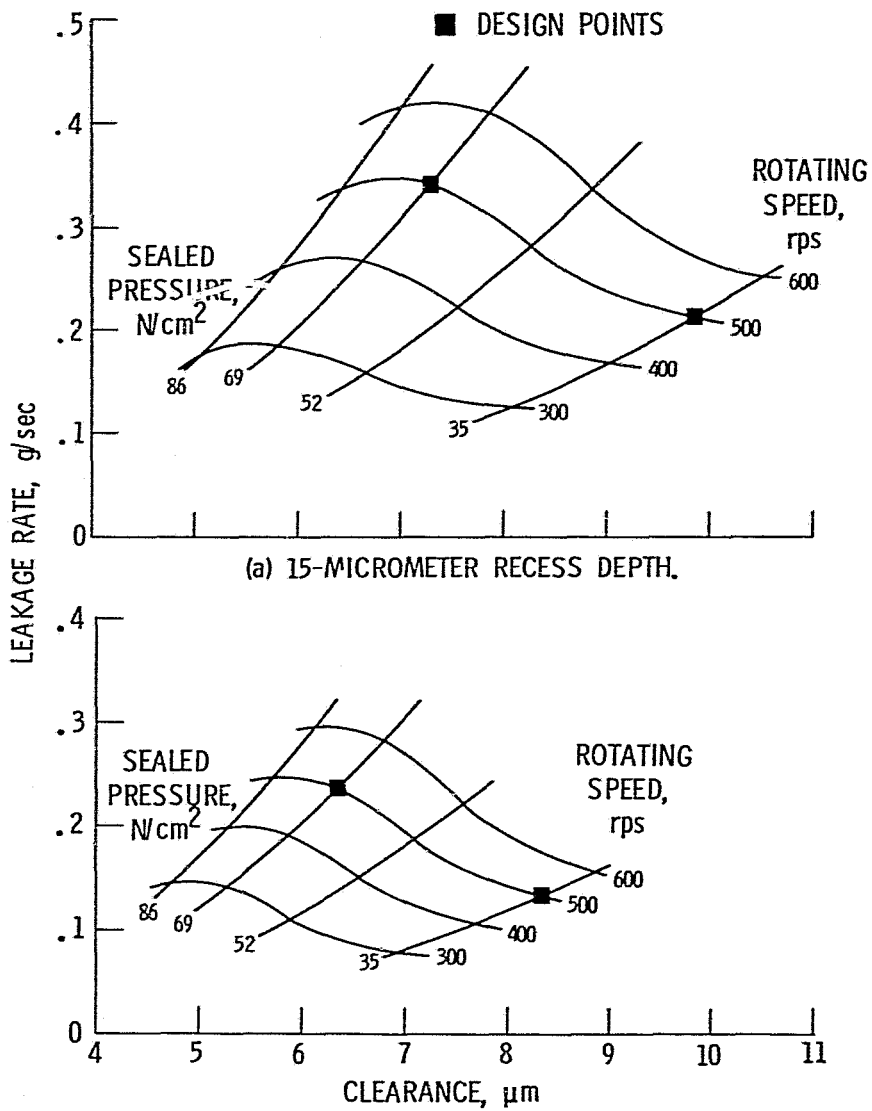

Figure 7. - Predicted circumferential seal performance in sealing room-temperature helium from 1 atmosphere. (ref. 3)

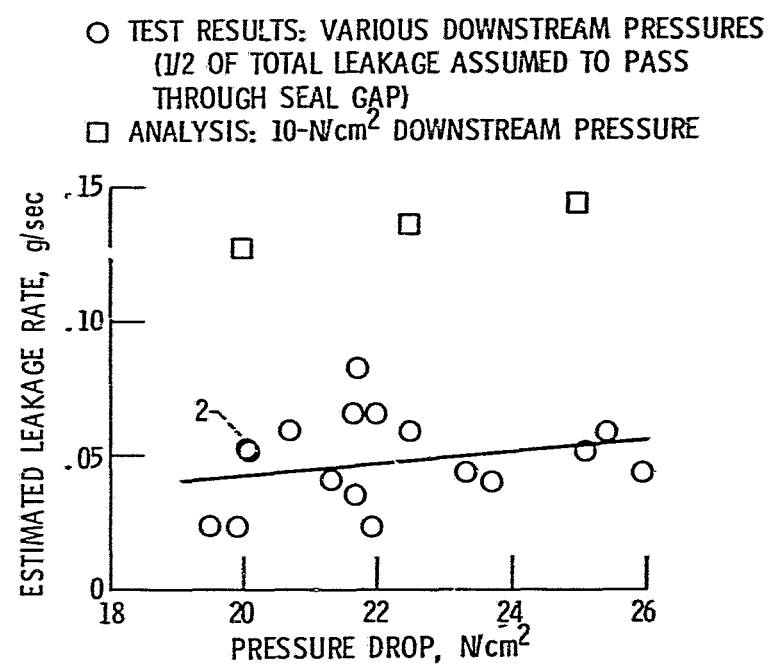

Figure 8. - Effect of pressure drop on leakage of circumferential seal at about 500 rps (157.2 m/sec) and room temperature for fuel-side seal (ref. 3).

1. Report No.	2. Government Accession No.	3. Recipient's Catalog No.
NASA TM-81659		

4. Title and Subtitle	5. Report Date
SELF-ACTING GEOMETRY FOR NONCONTACT SEALS	6. Performing Organization Code 505-32-42
7. Author(s) G. P. Allen	8. Performing Organization Report No. E-473
9. Performing Organization Name and Address National Aeronautics and Space Administration Lewis Research Center Cleveland, Ohio 44135	10. Work Unit No. 11. Contract or Grant No.
12. Sponsoring Agency Name and Address National Aeronautics and Space Administration Washington, D.C. 20546	13. Type of Report and Period Covered Technical Memorandum 14. Sponsoring Agency Code

15. Supplementary Notes

Prepared for the Annual Meeting of the American Society of Lubrication Engineers, Pittsburgh, Pennsylvania, May 11-14, 1981.

16. Abstract

Performance of two self-acting seal designs for a LOX turbopump was predicted over ranges of pressure differential and speed. Predictions were compared with test results. Performance of a radial face seal for LOX was predicted up to 448 N/cm^2 and 147 m/sec. Performance of a segmented circumferential seal for helium was predicted up to 69 N/cm^2 and 189 m/sec. Test results confirmed predictions of noncontact operation. Qualitative agreement between test and analysis was found. The LOX face seal evidently operated with mostly liquid in the self-acting geometry and mostly gas across the dam.

17. Key Words (Suggested by Author(s))	18. Distribution Statement
Self-acting seals; Face seal; Circumferential seal; Leakage; Fluid flow; Computer analysis	Unclassified - unlimited STAR Category 37

19. Security Classif. (of this report)	20. Security Classif. (of this page)	21. No. of Pages	22. Price*
Unclassified	Unclassified		

* For sale by the National Technical Information Service, Springfield, Virginia 22161