N O T I C E

THIS DOCUMENT HAS BEEN REPRODUCED FROM MICROFICHE. ALTHOUGH IT IS RECOGNIZED THAT CERTAIN PORTIONS ARE ILLEGIBLE, IT IS BEING RELEASED IN THE INTEREST OF MAKING AVAILABLE AS MUCH INFORMATION AS POSSIBLE

JPL PUBLICATION 80-79

(NASA-CR-163910) FBI FINGERPRINT IDENTIFICATION AUTOMATION STUDY: AIDS 3 EVALUATION REPORT. VOLUME 8: MEASURES OF EFFECTIVENESS (Jet Propulsion Lab.) 47 p HC A03/MF A01 CSCL 12B G3/66
N81-16833
Unclas
41230

FBI Fingerprint Identification Automation Study: AIDS III Evaluation Report

Volume VIII: Measures of Effectiveness

FEB 1981
RECEIVED
NASA STI FACILITY
ACCESS DEPT.

November 15, 1980

Prepared for
U.S. Department of Justice
Federal Bureau of Investigation
Through an agreement with
National Aeronautics and Space Administration
by
Jet Propulsion Laboratory
California Institute of Technology
Pasadena, California

JPL PUBLICATION 80-79

FBI Fingerprint Identification Automation Study: AIDS III Evaluation Report

Volume VIII: Measures of Effectiveness

November 15, 1980

Prepared for
U.S. Department of Justice
Federal Bureau of Investigation
Through an agreement with
National Aeronautics and Space Administration
by
Jet Propulsion Laboratory
California Institute of Technology
Pasadena, California

Prepared by the Jet Propulsion Laboratory, California Institute of Technology, and sponsored by the U.S. Department of Justice, Federal Bureau of Investigation, through an agreement with the National Aeronautics and Space Administration.

ACKNOWLEDGMENT

The following persons have contributed to the analysis described in this report and/or to the preparation of this report:

H. Alioth
E. Bahm
C. Beswick
S. Brunstein
P. Caples
R. Chafin
J. Chillemi
E. Cuddihy
R. Cunningham
J. Eskenazi
A. Feinberg
E. Gold
M. Goldberger
M. Gottdiener
D. Hopelain
J. Johnson
L. Keith
F. Kuhn
J. Lee
P. Lindley
W. MacFadden
R. Mancini
R. Miles
R. Miller
A. Mobilia
S. Mouneimne
J. Mustain
L. Perelman
C. Schober
D. Schwartz
C. Seafeldt
M. Slonski
E. Records
I. Reed
J. Urena
L. Webster
C. Weiner
R. Wells
J. Whitney

B. D. L. Mulhall
Task Manager

PRECEDING PAGE BLANK NOT FILMED

ABSTRACT

This volume, Measures of Effectiveness, describes the development of both quantitative and qualitative criteria that were used to evaluate conceptional systems for automating the functions for the FBI Identification Division. Specific alternative systems for automation were compared by using these developed criteria, defined as Measures of Effectiveness (MOE), to gauge system's performance in attempting to achieve certain goals. The MOE, essentially measurement tools that were developed through the combination of suitable parameters, pertain to each conceivable area of system operation. The methods and approaches used, both in selecting the parameters and in using the resulting MOE, are described. For a synopsis of the entire report, see the Executive Summary in the Compendium (Volume I).

CONTENTS

I. INTRODUCTION ---------- 1-1

A. DEFINITION ---------- 1-1

B. OBJECTIVES ---------- 1-1

C. SCOPE ---------- 1-1

II. GROUPING OF FEASIBILITY STUDY MEASURES ---------- 2-1

III. DEVELOPMENT AND APPLICATION OF MEASURES OF EFFECTIVENESS ---------- 3-1

A. INTRODUCTION ---------- 3-1

B. QUALITATIVE MEASURES ---------- 3-1

1. Maintainability ---------- 3-1

2. Operability ---------- 3-2

3. Observability ---------- 3-4

4. Flexibility ---------- 3-5

5. Integrity ---------- 3-5

6. Security ---------- 3-6

C. QUANTITATIVE MEASURES (DETERMINATION OUTSIDE STUDY SCOPE) ---------- 3-6

1. Response Time Benefit ---------- 3-6

D. QUANTITATIVE MEASURES (DETERMINATION WITHIN STUDY SCOPE) ---------- 3-10

1. Throughput and Response Time ---------- 3-10

2. Reliability ---------- 3-14

3. Availability ---------- 3-21

4. Utilization ---------- 3-24

5. Accuracy and Completeness ---------- 3-29

APPENDIXES

A. PROBABILITY OF BUSY SERVERS ---------- A-1

B. ACRONYMS ---------- B-1

Figures

2-1. Parameters for Measures of Effectiveness ---------- 2-2

3-1. Response Time Versus Benefits in Dollars ---------- 3-7

3-2. Cost/Benefit Ratios for Alternatives ---------- 3-9

3-3. Response Time Segments of Three Alternatives ---------- 3-11

3-4. Response Time Insertions Needed for Each Alternative ---------- 3-12

3-5. Cumulative Density Function of a Normally Distributed Response Time ---------- 3-14

3-6. Components in Series System ---------- 3-15

3-7. Components in Parallel System ---------- 3-16

3-8. Series and Parallel Component System Reliabilities ---------- 3-17

3-9. Components in Combined Series/Parallel Configuration ---------- 3-18

3-10. Composite Structure System Reliability ---------- 3-19

3-11. Components in Combined Parallel/Series Configuration ---------- 3-20

3-12. Component Versus System Redundancies ---------- 3-21

3-13. Example of System Decomposition ---------- 3-23

3-14. Average Waiting Time Versus Facility Utilization ---------- 3-26

3-15. Average Queue Size Versus Facility Utilization ---------- 3-27

3-16. Impact of Utilization on Feedback and Control Strategy ---------- 3-29

Tables

3-1. Cost/Benefit Comparisons for Different Response Times ---------- 3-9

3-2. Queue Length Increases for Various Values of Utilization ---------- 3-28

SECTION I

INTRODUCTION

A. DEFINITION

Measures of effectiveness (MOE) are the parameters used to gauge the state and performance of a system in attempting to achieve its goals.

In this document, system is taken to mean people, equipment, schemes, and interfaces. The management is the entity in control of the system.

B. OBJECTIVES

The purpose of this document is to develop measures that are significant in evaluating alternative designs for the automation of the FBI Identification Division functions.

It is also the intent of this document to indicate, where necessary, methods and approaches to be used in the course of applying these measures.

C. SCOPE

This document covers qualitative and quantitative measures of effectiveness of alternative designs for the automation of functions specified in the Top Down Functional Analysis (TDFA) (Reference 1).

SECTION II

GROUPING OF FEASIBILITY STUDY MEASURES

The MOE parameters are prescribed to match the four top-level functions outlined in the TDFA. These are:

(1) Provide fingerprint identification.

(2) Provide record keeping services.

(3) Management of the data base(s).

(4) Executive direction and control.

The MOE parameters are grouped into two major categories:

(1) Qualitative parameters that can, for the most part, be expressed in terms of distinctive properties such as well developed, insufficient etc.

(2) Quantitative parameters that can be expressed in terms of measurable units. This category has two subcategories:

(a) Parameters whose determination is within study scope.

(b) Parameters whose determination is outside study scope.

A list of all measures of effectiveness by category or subcategory are listed in Figure 2-1.

	QUANTITATIVE	QUALITATIVE
DETERMINATION WITHIN STUDY SCOPE	THROUGHPUT AND RESPON... TIME RELIABILITY AVAILABILITY UTILIZATION ACCURACY AND COMPLETENESS	MAINTAINABILITY OPERABILITY OBSERVABILITY FLEXIBILITY INTEGRITY SECURITY
DETERMINATION OUTSIDE STUDY SCOPE	RESPONSE TIME BENEFITS	

Figure 2-1. Parameters for Measures of Effectiveness

ORIGINAL PAGE IS
OF POOR QUALITY

SECTION III

DEVELOPMENT AND APPLICATION OF MEASURES OF EFFECTIVENESS

A. INTRODUCTION

A clear and definitive distinction between the MOE and the functional requirements should be made at the outset.

While the functional requirements specify the capabilities that should be incorporated into a design, the MOE address the parameters that can test these capabilities. The MOE are not meant to reveal deficiencies in designs because of a missing function but are designed to provide a measurement tool to the functional requirements in determining system design capabilities. As such, MOE are considered complementary to the functional requirements.

The MOE were developed in a generalized format in order to facilitate their application to alternative designs. However, their general framework is the Identification Division functions.

Two assumptions were made when the MOE were developed:

(1) One of the alternative designs will be implemented sometime in the 20th Century. During that time the external and the internal environment will not change the basic Identification Division functions from either the current system environment or as they are stated in the Top Down Functional Analysis document.

(2) All alternative designs will involve a document and/or data flow system made up of a network of stages somehow linked together in order to accomplish the identification and record keeping functions.

B. QUALITATIVE MEASURES

1. Maintainability

Maintainability is a design and implementation attribute that is related to restoration of components or subsystems to operational status as a result of maintenance procedures and resources.

The objectives of maintainability are to:

(1) Decrease system complexity and maintenance duration.

(2) Decrease equipment maintenance cost.

(3) Provide positive fault isolation.

(4) Increase equipment up-time.

The system designer is expected to perform the following at the outset:

(1) Generate maintainability requirements at system and subsystem levels.

(2) Develop methodology to control maintainability variables.

(3) Specify a definitive plan to develop a department capable of carrying out the functions of the maintainability program.

The basic element of maintainability is the unit of time. It is used to measure maintainability factors such as:

(1) Equipment design characteristics. This includes physical aspects, testing, tool requirements, and skill level needed.

(2) Maintenance personnel skill level, experience, and technical proficiency.

(3) Logistics and maintenance organization support involved in maintaining the system.

System design features required to optimize maintainability include:

(1) Quick and positive recognition of equipment malfunction.

(2) Quick and positive identification of defective components.

(3) Available maintenance skills and training to develop adequate proficiency.

(4) Optimum accessibility to equipment.

(5) Low mean time to perform maintenance.

2. Operability

Operability focuses on the design aspects of the system pertaining to the interactions among the system, the support personnel, the management, the physical environment, and the current system during and after implementation. This is necessary to maintain production, qualitatively and quantitatively, at the required level.

The items to be considered include level of difficulty in directing system operations, operational control model, man-machine interfaces, technical support, coexistence of parallel operations, and transition from the current to an automated system.

a. Level of Difficulty in Directing System Operations. The level of difficulty in directing system operations should be viewed in terms of functions performed by the FBI personnel during system start up, normal operations, degraded mode operations, shutdown, and after a crash.

b. Operational Control Model. System design is expected to provide Identification Division management with techniques and procedures to predict the environment. An operation model to determine allocation of resources (people, space, equipment, money) in order to maintain or to attain certain production level at a specific response time is also expected. The level of detail should respond to questions such as these:

(1) How many continuous processing hours are required from each work station to handle a specific workload?

(2) How many employee-hours, at a certain grade, should be scheduled to keep a work station hourly output at a nominal rate?

(3) How to man an assembly line work station 15 continuous hours a day?

(4) What will operators do if subsystems crash? Will the management tolerate 300 idle operators for 5 hours once a week?

c. Man-Machine Interfaces. Man-machine interfaces should provide work space arrangement of elements, components, and subsystems that maximize operator motor skills. Interfaces should use several of the operator's sensor channels, especially during critical periods of system operation. Display design, shape, size, and color should aim toward efficient mental processing. System support personnel should be optimally allocated to handle daily workloads by type.

d. Technical Support. Phasing in automation will result in the reduction of operating personnel as a production component in the overall process. The functions that the human continues to perform are as a decision maker, detector of irregularity, and troubleshooter.

The automated system will need increased technical support. The technical support needed for a production operation such as the Identification Division is a mix of the following skills: Industrial engineering/operation research, computer science (hardware, software and data base management), programming, and maintenance support.

e. Coexistence of Parallel Operations (Current and Automated). System design should include the total system operation. If the current system is to stay in operation for years to come, or

even if it is to be the backup in case the automated system is aborted, then the automated system should be compatible with the current system in the following areas:

(1) Nomenclature used in both systems should be clear to employees in both systems who may be involved in the interface.

(2) Allocation of employees to both systems should be based on response time requirements and costs.

(3) The design should impose response time requirements when documents move from one system to another.

(4) The interfaces between the two systems should be designed to optimize operations. The exit point of one system should correspond to an entry point of another.

(5) The transportation mode between the two systems should be compatible.

(6) Employees in charge of the interfaces should be familiar with the operation of both systems.

(7) Audit trails for exchanges of documents should be maintained and criteria for exchanges should be defined.

f. Transition from the Current to an Automated System. Transition should use diagrams, sketches, networks, and bar charts to indicate the dates of various transitions by subsystems and the duration of each transition. The layout of subsystem components for each phase should be described. Work load shifts, by type, from the current to an automated system should be determined along with personnel requirements (number, skill level, and mix) for each transition phase. Consideration will have to be given to noise introduced with each phase. For example, the AIDS III technical file conversion had an adverse impact on fingerprint processing response time in the manual system. Similar events need to be anticipated and dealt with through reasonable projections and planning.

3. Observability

While operability is the active measure of system operation, observability is the passive measure that closes the loop in an effective control system.

A system is said to be observable if it can produce measurements at different stages and times that contain sufficient information to enable the complete identification of the system and workload status.

Two categories of observability are identified: management parameters and system control parameters.

a. Management Parameters. Periodic status reports including workload throughput by type, turnaround time of documents by type, operator performance, system availability, and cost per transaction per week or month.

b. System Control Parameters. These parameters include:

(1) Subsystem status such as operational modes (batch, real-time) and non-operational conditions (down - awaiting maintenance, down - being maintained, and the expected time to restoration).

(2) System configuration status. This item pertains to the information relative to the number and configuration of components and subsystems that are functioning in a normal mode at any point in time. The level of details should be sufficient to enable operators and managers to effect decisions relative to the operability of the system.

(3) Observable parameters. The parameters that assist in identifying process control status at various work stations or subsystems are: arrival rate, queues, transactions waiting after being processed, service times, response times, transaction status and location, and turnaround time per subsystem and system per transaction type.

4. Flexibility

Flexibility points to a design feature that will allow system additions, upgrading, and maintenance in order to achieve the following results:

(1) Keep maintenance cost at a reasonable level.

(2) Avoid major redesign of software, hardware, and communication.

(3) Reduce the possibility of near-term obsolescence. Two features of this measure are standardization of components and modularity of subsystems.

5. Integrity

Integrity is a measure of the procedures utilized to ensure that data and information throughout the system will remain intact and

accessible after starts, termination, crashes, transmissions, file updates, manipulation, input, and output.

6. Security

This measure evaluates techniques embedded in system designs to ensure that no unauthorized person or agency gains access to data, documents, or files, either physically or by using electronic or photographic devices.

C. QUANTITATIVE MEASURE (DETERMINATION OUTSIDE STUDY SCOPE)

1. Response Time Benefit

It is highly probable that the identification system users derive significant benefit increases from improved system response time. The problem is that the quantitative relationship(s) between response time and benefits are not known. Therefore, determining an absolute cost/benefit ratio for alternative systems is not feasible within this study scope. Instead, two other approaches similar to cost/benefit ratio are suggested: a.) equal response time approach, and b.) response cost approach.

a. Equal Response Time Approach. This approach postulates that system design alternatives can be compared on the basis of cost alone if their respective response times are equal.

Assume that the system user benefits attributable to response time are represented by a single-valued decreasing function of response time:

$$B = f(\Delta T) \qquad o < \Delta T \leq k \qquad \text{(Equation 1)}$$

where

B = benefits in dollars

ΔT = weighted response time (as in Equation 6)

k = required response time threshold such as 4, 8, 48, or 96 hours

Graphically that function may be represented by the curve shown in Figure 3-1.

If there are n alternatives and C_n is designated to be the total cost (labor, capital equipment, maintenance, leasing, and facilities) associated with alternative A_n, then the cost benefit ratio is equal to:

$$A_n = \frac{C_n}{B_n}$$

or

$$A = \frac{C_n}{f(\Delta T)_n} \qquad \text{(Equation 2)}$$

Then comparing alternatives against a bench mark base case:

$$I_{n-1} = \frac{\dfrac{C_b}{f(\Delta T)_b} \quad \dfrac{C_{n-1}}{f(\Delta T)_{n-1}}}{\dfrac{C_b}{f(\Delta T)_b}} \times 100 \text{ for } \Delta T = k \text{ hours} \qquad \text{(Equation 3)}$$

will result in percent difference (I_{n-1}) between alternative An-1 and the base case A_b. Cb and $F(\Delta T)_b$ are the cost and benefits of the base case.

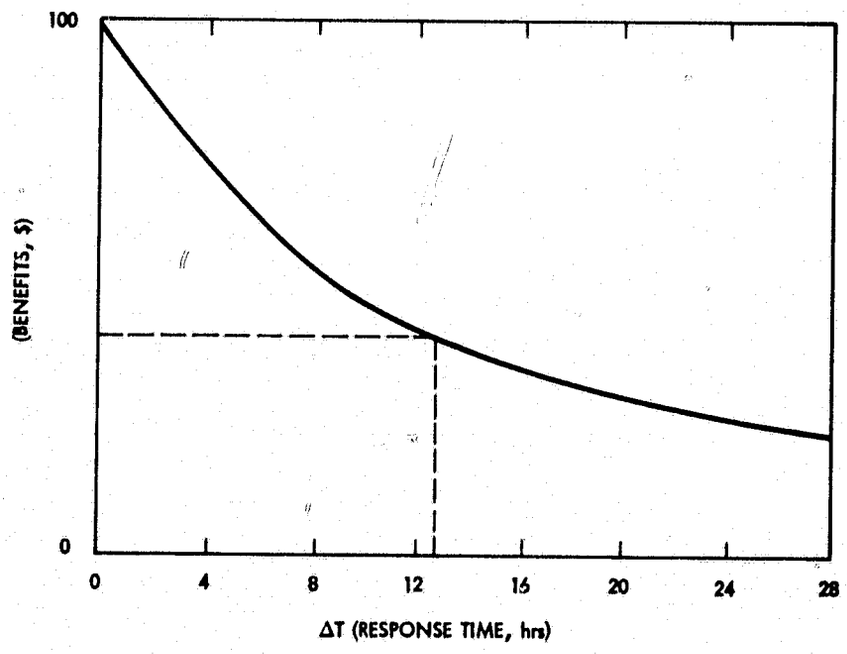

Figure 3-1. Response Time Versus Benefits in Dollars

If enough flexibility resides in each alternative design, production capacities can be modified to produce equal response times for all the alternatives:

$$\Delta T_1 = \Delta T_2 = \Delta T_3 \ldots = \Delta T_n$$

which will result in having the benefits equal:

$$B(\Delta T)_1 = B(\Delta T)_2 = B(\Delta T)_3 \ldots = B(\Delta T)_n$$

The "new" cost associated with ΔT_n modification can be generated based on the modified capacities.

Since the denominators in the cost benefit ratio of all alternatives become equal, then the percent difference between alternatives I_{n-1} of Equation 3 is reduced to the cost variables only:

$$I_{n-1} = \frac{C_b - C_{n-1}}{C_b} \times 100 \text{ for } \Delta T_n = k \text{ hours} \qquad \text{(Equation 4)}$$

Different I_{n-1} values may be computed for different response times. The results can be summarized in a table similar to Table 3-1. Graphical representation such as Figure 3-2 of I_{n-1} values versus ΔT for each alternative could be helpful in revealing interesting points of intersection. Similar plots covering a period of years could be attempted in order to test possibilities of cost/benefit reversals due to system degradation because of workload or other factors.

The equal response time approach is feasible if simulation techniques are used under similar workload conditions. All idiosyncrasies of alternatives should be either eliminated or added equally to each alternative.

b) Response Cost Approach. This approach is a direct application of costs and weighted response time of alternatives. No modification to capacities are required. Each alternative will have a response cost equal to:

$$A_n = \frac{C_n}{(\Delta T)} \qquad \text{for } \Delta T_n = K \text{ hours} \qquad \text{(Equation 5)}$$

Table 3-1. Cost/Benefit Comparisons for Different Response Times

	T_1	T_2	- - -	T_k
A_1	$I_{1,1}$	$I_{1,2}$	- - -	$I_{1,k}$
A_2	$I_{2,1}$	$I_{2,2}$	- - -	$I_{2,k}$
			- - -	
			- - -	
			- - -	
A_{n-1}	$I_{n-1,1}$	$I_{n-1,2}$	- - -	$I_{n-1,k}$

where ΔT is obtained from Equation 6. The units of A_n will be in terms of dollars per hour. Comparisons of values of A_n for all alternatives can be done in a manner similar to the equal response time approach.

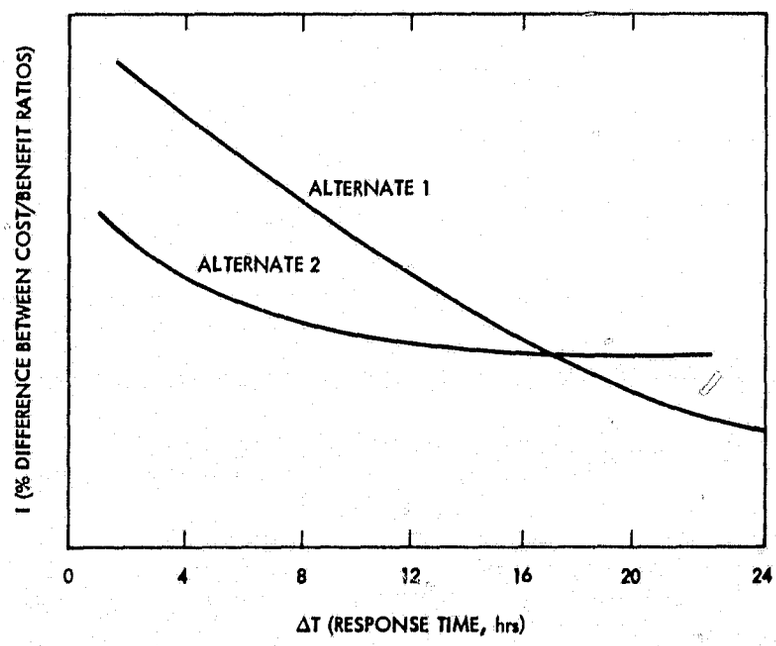

Figure 3-2. Cost/Benefit Ratios for Alternatives

The advantage of response cost approach is that it does not add a layer of approximation, by using simulation, as the equal response time approach does.

Parameters such as cost per transaction, or annual cost per document type are considered subsets of Response Cost Approach.

D. QUANTITATIVE MEASURES (DETERMINATION WITHIN STUDY SCOPE)

1. Throughput and Response Time

a. Definitions. Throughput volume is the total number of documents by type that are completely processed by the system during a specific period of time called response time.

Response time is the total time interval between the instant a transaction is transmitted to the Identification Division to the time a system response reaches its point of impact.

b. Discussion. The throughput is the outcome of a workload mix composed of the following type of requests.

(1) Expedite.

(2) Criminal Fingerprint.

(3) Applicant Fingerprint.

(4) Disposition notices.

(5) Miscellaneous.

For the purpose of this document, the response time is broken down into six distinct, non-overlapping segments:

ΔT_1 = Time interval from the instant a transaction is originated to the instant it reaches Identification Division.

ΔT_2 = Time interval from the time a transaction reaches the Identification Division to the time it enters the system for processing.

ΔT_3 = Time interval for complete internal system processing; i.e., entry time to response generation time.

ΔT_4 = Time interval from the time a response is generated to the time it is transmitted.

ΔT_5 = Time interval from the time a response is transmitted to the time it reaches its point of origin.

ΔT_6 = Time interval from the time a response reaches the point of origin to the time it reaches its point of impact.

Therefore the total response is

$$RT = \sum_{i=1}^{6} \Delta T_i$$

Alternative designs are expected to be evaluated on an equal basis. Equal basis comparison is feasible if all segments of a certain measure are complete. If in an alternative, a segment is missing (e.g., ΔT_5, in the response time measure) that alternative measure cannot justifiably be compared with the same measure of another alternative whose segments are complete. In that case, a "dummy" insertion is to be added to the alternative that has incomplete segments to make the equal basis criterion applicable.

As it is not expected that all alternatives will address all response time segments, a number of "reasonable" response time insertions can be added wherever needed. "Reasonable" means an estimate taken from the present method of performing a corresponding function. For example, if alternative 1 is designed to modify segment ΔT_3 of the response time, while alternative 2 modifies segments ΔT_2, ΔT_3, and ΔT_4, then values estimated for ΔT_2 and ΔT_4 of response time segments whould be inserted in alternative 1 in order for the two alternatives to have equal numbers of segments. If a third alternative is considered which addresses the modification of all response time segments, then alternative 1 will need 5 insertions (ΔT_1, ΔT_2, ΔT_4, ΔT_5, and ΔT_6) and alternative 2 will need three insertions (ΔT_1, ΔT_5, and ΔT_6) equal in value to ΔT_1, and ΔT_5 and ΔT_6 of alternative 2. Figures 3-3 and 3-4 summarize this discussion.

	ΔT_1	ΔT_2	ΔT_3	ΔT_4	ΔT_5	ΔT_6
ALTERNATIVE 1			√			
ALTERNATIVE 2		√	√	√		
ALTERNATIVE 3	√	√	√	√	√	√

Figure 3-3. Response Time Segments of Three Alternatives

	ΔT_1	ΔT_2	ΔT_3	ΔT_4	ΔT_5	ΔT_6
ALTERNATIVE 1	X	X	0	X	X	X
ALTERNATIVE 2	X	0	0	0	X	X
ALTERNATIVE 3	0	0	0	0	0	0

Figure 3-4. Response Time Insertions Needed for Each Alternative

In case all alternatives address the modification of the same response time segements, then those segments that are not relevant to the analysis should be dropped. For example, if ΔT_3 is the only segment to be modified in all alternatives, then, ΔT_1, ΔT_2, ΔT_4, ΔT_5, and ΔT_6 will not be considered and therefore dropped from the computation.

It should be noted that response time is a variable dependent on throughput, service times, and number of facilities.

c. Methodology of Application. Different documents/transactions will be processed differently, will have different response times, and flow along different paths on their way out of the system.

The variation in response times could be attributed to variations in the document parameters, variation among servers, variation within each server, and/or interaction between two or more of these factors. In this case it is reasonable to assume that processing time at each work station is an independent random variable, x_i. Each one of these random variables could be represented by a certain distribution with a mean of the x_i and a variance of σ^2.

Irrespective of the type of distribution functions, the sum of processing times of all work stations (including transportation and transmission) would have a limiting distribution. According to the Central Limit Theorem that limiting distribution is normal* with a mean equal to:

---

*as n approaches infinity. This is approximately true for large n.

$$\overline{X} = \sum_{i=1}^{n} \overline{x_i}$$

and a variance equal to:

$$\sigma^2 = \sum_{i=1}^{n} \sigma_i^2$$

where n is the number of work stations.

If volume and priority by document type is introduced, the mean response time would be equal to:

$$\Delta T = \frac{\sum_{j=1}^{m} a_j Q_j X_j}{\sum_{j=1}^{m} a_j Q_j} \qquad \text{(Equation 6)}$$

and the variance would be equal to:

$$\sigma^2 = \frac{\sum_{j=1}^{m} a_j Q_j \sigma_j^2}{\sum_{j=1}^{m} a_j Q_j} \qquad \text{(Equation 7)}$$

where a_j = document type priority

Q_j = volume by document type

X_j = response time by document type

j = document type

m = number of document type

Response time samples ($\geq 2n$; n is the number of stations) can be used to generate cumulative distribution function values in order to determine the overall response time of processing each card/document with probability P. Figure 3-5 illustrates the cumulative distribution function of a normally distributed response time.

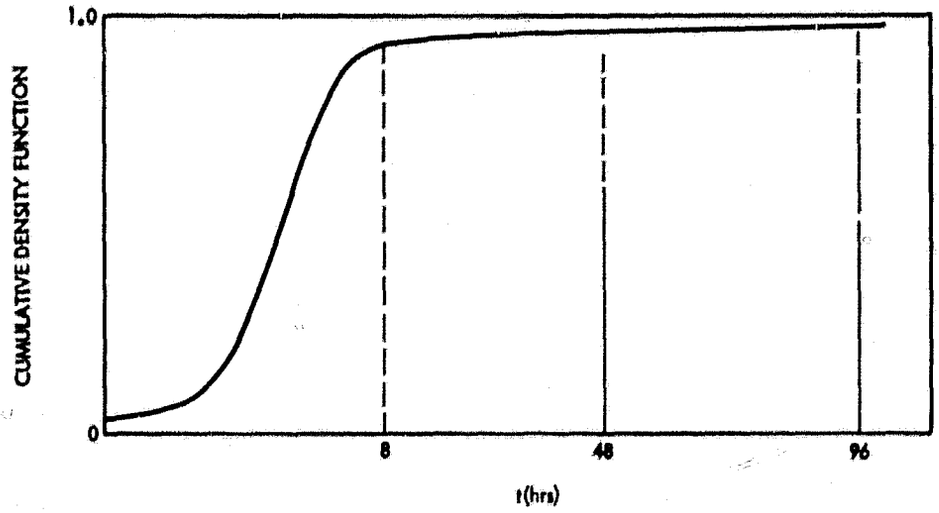

Figure 3-5. Cumulative Density Function of a Normally Distributed Response Time

In order to test alternative design response times using the FBI guidelines, the following set of equations may be used:

$$F(K) = P(\Delta T \leq K)$$

$$F(8) = P(\Delta T \leq 8 \text{ hrs}) = 0.95$$

$$F(48) = P(\Delta T \leq 48 \text{ hrs}) = 0.99$$

$$F(96) = P(\Delta T \leq 96) = 0.999$$

where F(K) is the cumulative distribution function and ΔT is a random variable representing response time.

2. Reliability*

a. Definition. Component reliability is the probability that the component will function without failure over a specified period of time, t.

$$R(t) = P(T > t)$$

where T is the time to failure of the component and R(t) is the reliability function.

---

*Although software reliability is of paramount significance, the nature of the feasibility study limits the use of the term to hardware reliability.

b. Discussion. For the purpose of this study, the time to failure is considered a continuous random variable described by an exponential distribution with a constant failure rate, λ. Thus the reliability function can be put into the following form:

$$R(t) = e^{-\lambda t} \qquad \text{(Equation 8)}$$

The exponential failure distribution implies that the probability of failure is independent of past history and so long as a component is still functioning it is "as good as new."

For the purpose of this study, statistical independence is assumed for all components.

For a system structure of two or more components (subsystems) functioning independently of each other, the reliability of the system depends on two factors:

(1) The reliability of each component.

(2) The configuration of system components.

The following generalized configurations are considered as data from which particular system reliabilities can be computed.

1) Components in Series. Consider R_i to be the reliability of ith component, C_i, in a series component system as shown in Figure 3-6.

In order for the system to function, each one of the components must be operating successfully. Therefore the system reliability, R_s, is:

$$R_s = \prod_{i=1}^{n} R_i$$

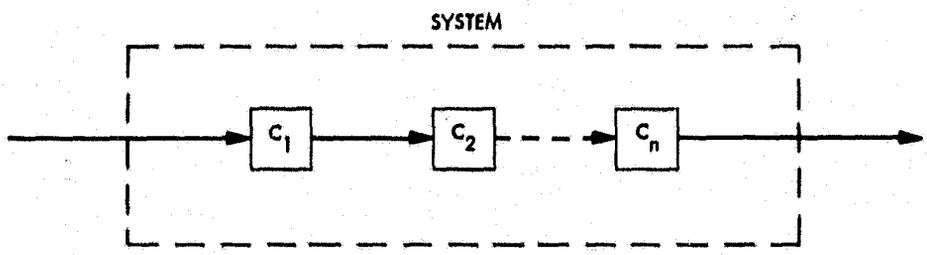

Figure 3-6. Components in Series System

or

$$R_s = e^{\left(-\sum_{i=1}^{n} \lambda_i t\right)} \qquad \text{(Equation 9)}$$

2) Components in Parallel. In order for the system to function, at least one component must be operating successfully, see Figure 3-7, then the system reliability, R_s, is:

R_s = 1 - probability the system is in a failed state

$$R_s = 1 - \prod_{i=1}^{n} (1 - R_i)$$

$$R_s = 1 - \prod_{i=1}^{n} (1 - e^{-\lambda_i t}) \qquad \text{(Equation 10)}$$

If all the components have equal reliabilities for all i, then Equation 8 becomes:

$$R_s = 1 - (1 - e^{-\lambda t})^n$$

Figure 3-8 is an illustration of series and parallel structure system reliabilities.

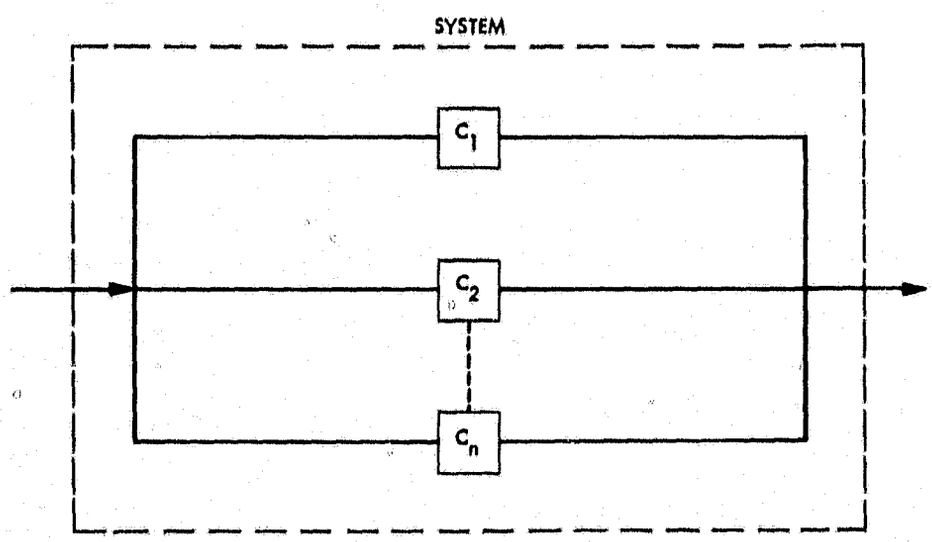

Figure 3-7. Components in Parallel System

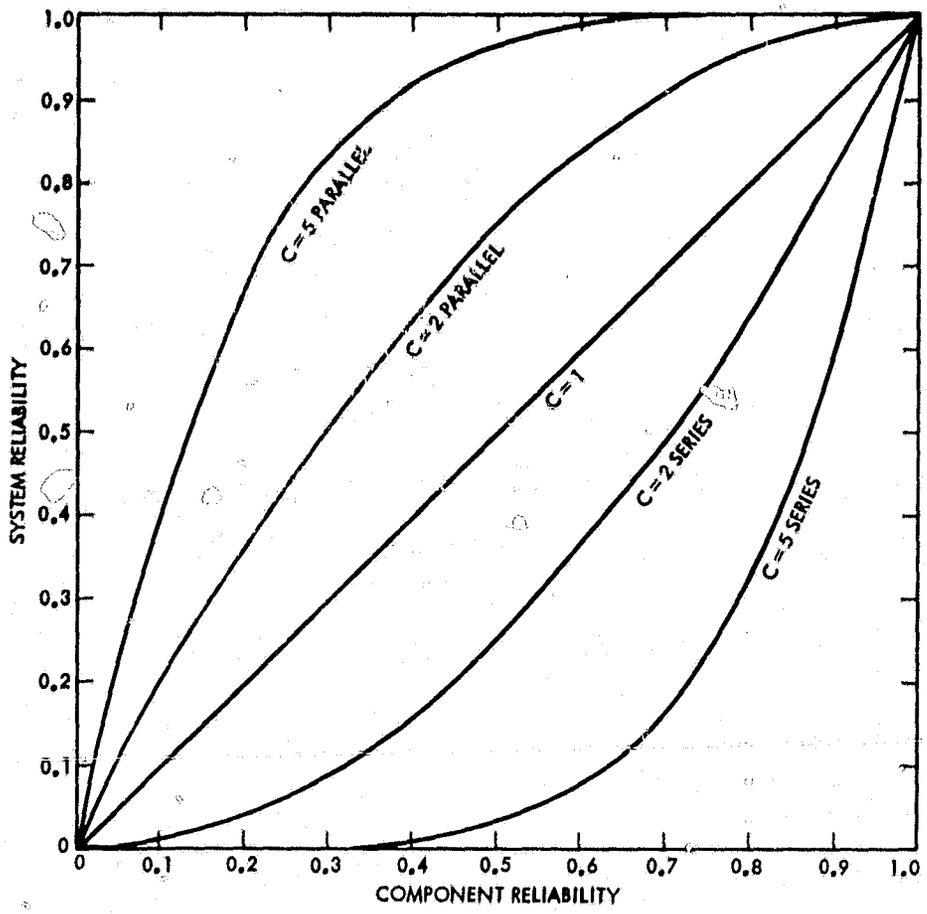

Figure 3-8. Series and Parallel Component System Reliabilities

3) Components in Combined Series/Parallel Configuration (Component Redundancies). In this configuration, the system will function if at least one component is operating successfully in each stage when needed. See Figure 3-9.

The system reliability, R_s, is:

$$R_s = \prod_{j=1}^{k} \left[1 - \prod_{i=1}^{n} (1 - R_{i,j}) \right] \qquad \text{(Equation 11)}$$

ORIGINAL PAGE IS
OF POOR QUALITY

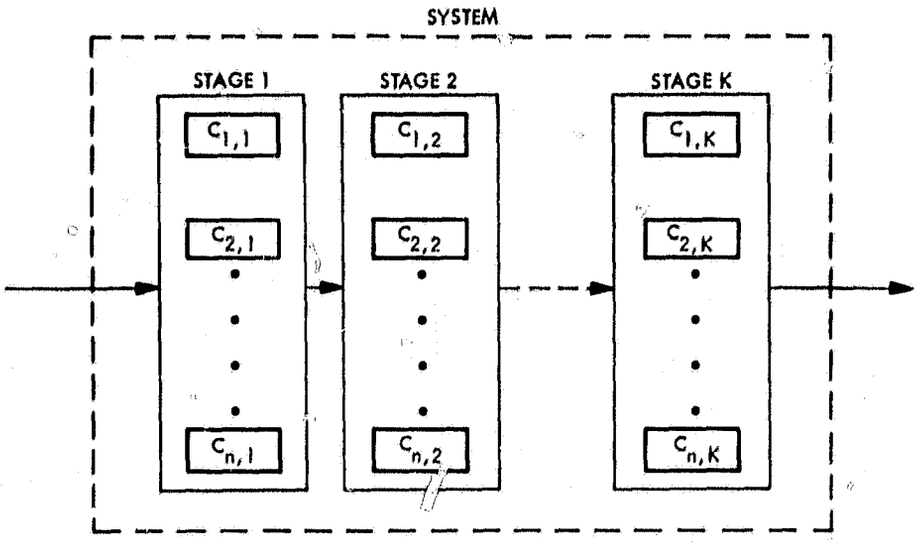

Figure 3-9. Components in Combined Series/Parallel Configuration

When components are identical within a stage, then system reliability becomes:

$$R_s = \prod_{j=1}^{k} \left[1 - (1 - R_j)^n \right]$$

Figure 3-10 shows that the system reliability as a function of component reliability is represented by a reverse curve. The shape of the curve suggests the impact of component reliability, number of stages, and redundancy on the reliability of a composite structure system.

4) <u>Components in Combined Parallel/Series Configuration (System Redundancy)</u>. In this configuration, Figure 3-11, the system will function if any set of the series components is operating successfully. The system reliability is:

$$R_s = 1 - \prod_{i=1}^{n} \left[1 - \prod_{j=1}^{k} R_{i,j} \right] \qquad \text{(Equation 12)}$$

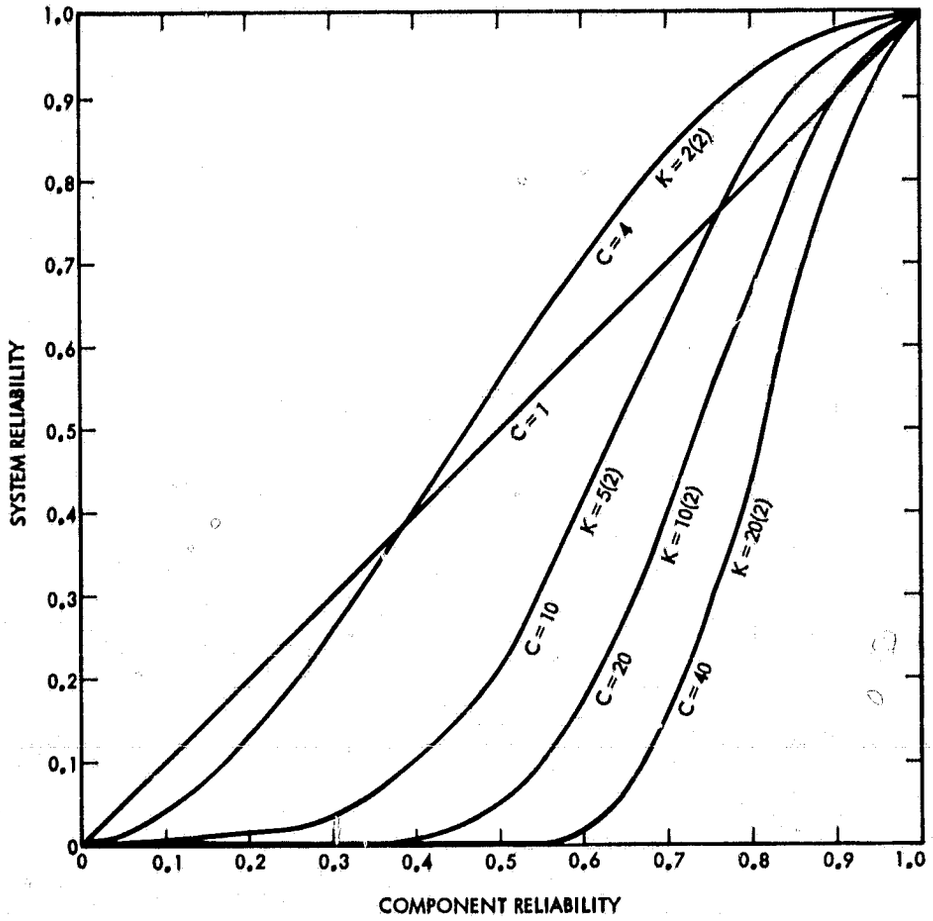

Figure 3-10. Composite Structure System Reliability

When components are identical within a series set, then system reliability becomes:

$$R_s = 1 - \left[1 - \prod_{j=1}^{k} R_j \right]^n$$

When all components throughout the system sets are equal, then the system reliability is:

$$R_s = 1 - \left[1 - R^k \right]^n$$

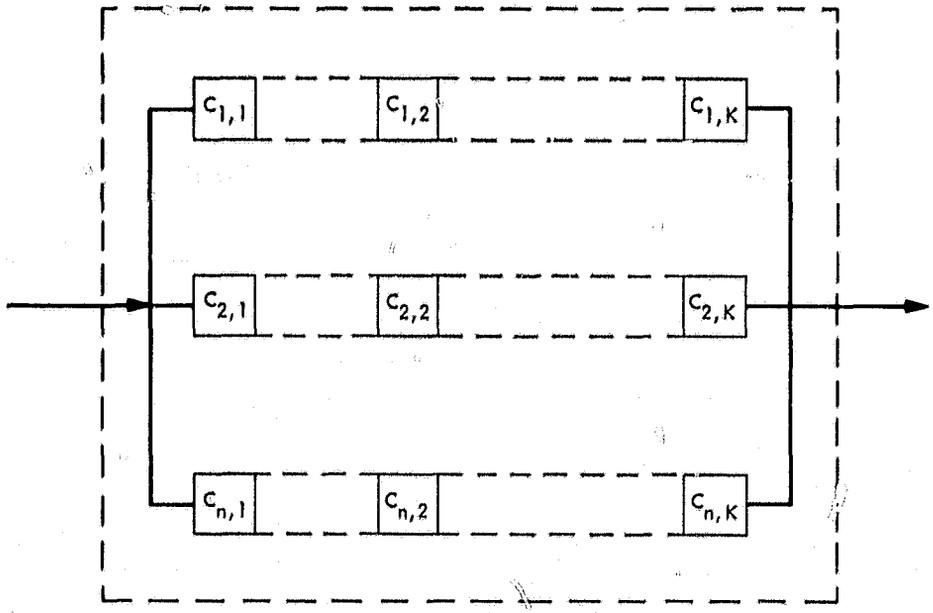

Figure 3-11. Components in Combined Parallel/Series Configuration

The difference between system reliability of configurations 3-9 and 3-11 indicates that redundancy at the component level is more effective than redundancy at the system level. Figure 3-12 is an illustration of this remark using a 4-component system in each case.

c. Application. Reliability as a measure of effectiveness may be included in the evaluation process for two reasons:

(1) To compare reliability of alternative system designs with that of the functional requirements, if any.

(2) To assess the adequacy of maintenance strategy and maintenance cost projections of each alternative.

The reliability computation can be handled by using a system modular decomposition approach as follows:

A system is decomposed into its major subsystems. Each major subsystem is decomposed into subsystems. Each subsystem is decomposed into components. This process will continue to the level of parts specified by each respective design. From this information, the reliability of each component will be determined. Then the reliability of each subsystem will be computed. The process will continue up to the system level.

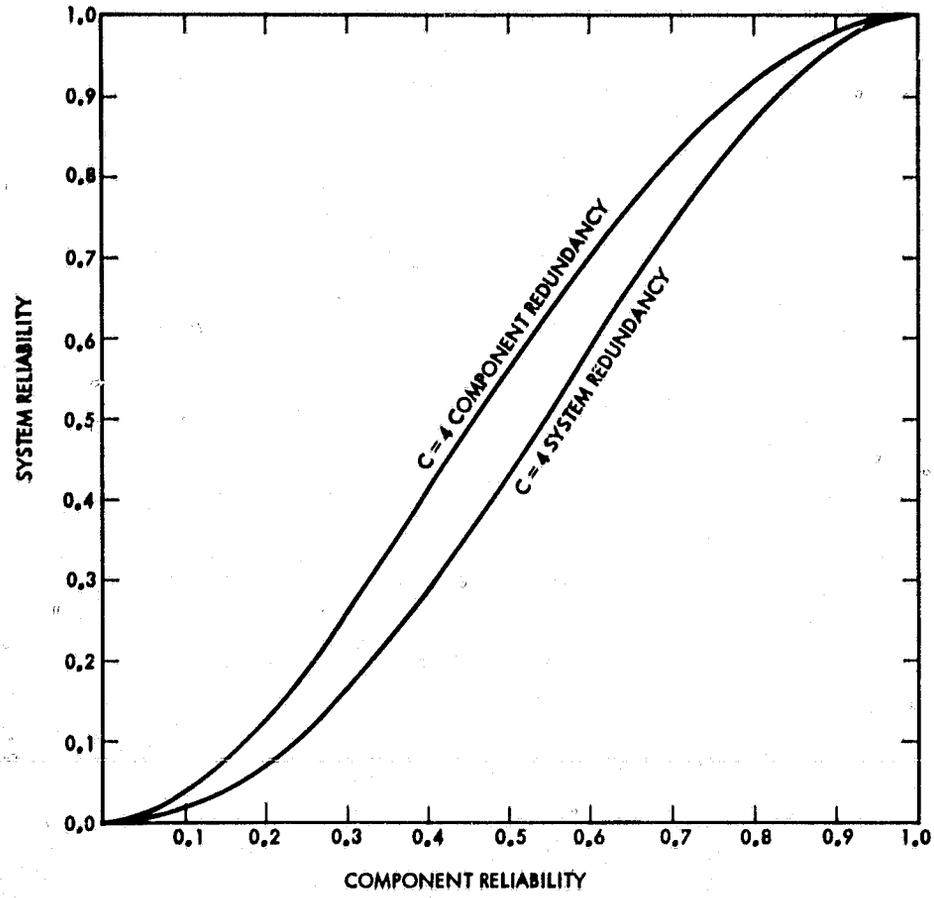

Figure 3-12. Component Versus System Redundancies

3. Availability

a. Definition. Availability is the ratio of the time the required elements of the system are operational to the total time the system or any of its elements are expected to be operational.

For one simple production unit, availability is equal to:

$$A = \frac{MTBF}{MTBF + MTTR}$$

where MTBF is the mean time between failures, in hours, and MTTR is the mean time to restore, in hours. The MTTR includes the mean time to request service, the mean time to respond, the mean time to travel, the mean time to debug, the mean time to repair, and all other mean times that will keep that unit from entering production assembly line.

Three system availability configurations are considered:

(1) For series structure with one failed component, functioning components suspended their operation during the time that component is unavailable. System availability, A_s, is given by:

$$A_s = \frac{1}{1 + \sum_{i=1}^{n} \frac{R_i}{F_i}} \qquad \text{(Equation 13)}$$

where R = MTTR, F = MTBF for component i.

(2) For a parallel structure system, the system availability is:

$$A_s = 1 - \prod_{i=1}^{n} (1 - A_i) \qquad \text{(Equation 14)}$$

Where A_i is the component availability.

(3) For a series/parallel structure, the system availability is:

$$A_s = \prod_{j=1}^{k} \left[1 - \prod_{i=1}^{n} (1 - A_{i,j}) \right] \qquad \text{(Equation 15)}$$

where i stands for components in a stage and j stands for stages in a system.

This study recognizes the fact that failures vary from "hard failure", where system operation completely halts, to "soft failure" where the system continues to operate but in a degraded mode. However, in this document component "hard failure" is assumed. Depending on the system configuration and hierarchy, the previous assumption may or may not lead to complete halt of system operations.

b. Application Methodology. Availability, unlike reliability, relates directly to the productivity of the system. The most significant implication of availability is the fact that if a component is not functioning it will either add to the workload of other components and increase the queue sizes or completely halt the system production during the time it is unavailable.

The unavailability duration is what makes availability consideration a critical measure of effectiveness for production systems such as those in the Identification Division operations.

The availability computation could be handled by system decomposition in a manner similar to reliability calculations. The structure in Figure 3-13 is an example. It is a tree structure system where the failure of one M_i or V_j is not associated with the failure of other M_is or V_js, but the failure of component C or E will disable the system input-output flow for all intents and purposes. Therefore, the system will be unavailable if all V_js, all M_is, complements of V_js and M_is, C, or E are unavailable. Then the system availability of the given structure is:

$$A_s = A_E \times A_c \times \left[1 - \prod_{i=1}^{m} \left[1 - A_{M_i} \left[1 - \prod_{j=1}^{n} (1 - A_{V_j})\right]\right]\right] \quad \text{(Equation 16)}$$

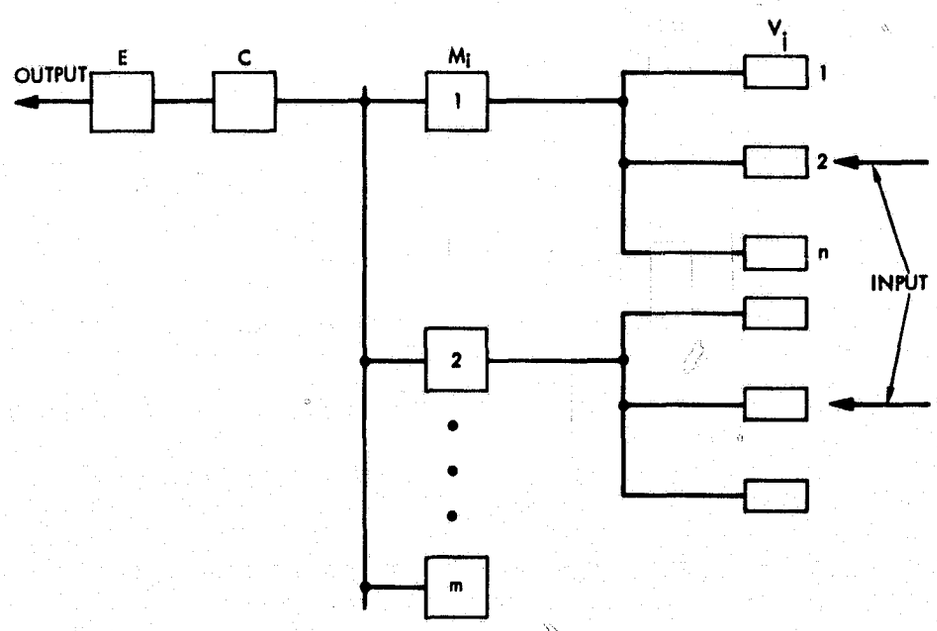

Figure 3-13. Example of System Decomposition

4. Utilization

a. Definition. In a flow system network, utilization is the ratio of the rate at which a workload is applied to a facility to the maximum rate at which the facility can process this workload.

b. Discussion. In a fingerprint identification facility, a server may be busy part time, most of the time, or all the time. If he is busy all the time, we say his utilization is 1.0. But if he is busy 70% of the time and idle waiting for another fingerprint the remaining 30% of the time, we say his utilization is 0.7. Similarly any facility, be it a computer, a terminal operator, or a communication controller, is regarded to be operating at a certain utilization rate.

In production systems one of the objectives is to maximize utilization of operators and machines in order to get the most production at the least possible cost. Although it is desirable to achieve a utilization of 1.0 for every facility, the side effects, as a result of random service times, are large queues and long delays as utilization approaches 1.0.

Utilization is dependent on two variables, the arrival rate E(n) and the service time $E(t_s)$, so that:

$$\rho = E(n) \times E(t_s) \qquad 0 \leq \rho < 1 \qquad \text{(Equation 17)}$$

for a single-server facility and

$$\rho = \frac{E(n)}{m} \times E(t_s) \qquad 0 \leq \rho < 1 \qquad \text{(Equation 18)}$$

for a multi-server facility where ρ is called the facility utilization and m is the number of servers.

For the purpose of illustration, assume we have the following queueing system described by the notation:

M/M/m/∞/FCFS

Where the first and second letters M denote that interarrival time and service time are exponentially distributed, the third descriptor stands for the number of servers. The fourth descriptor denotes that no restriction on queue size is imposed and the fifth descriptor indicates that the discipline is based on first come first served.

The steady state average wait time in the system (i.e., average wait time in queue plus mean service time in the facility) is represented by the following algorithm:

$$E(t_q) = \frac{B}{m} \frac{E(t_s)}{1-\rho} + E(t_s) \qquad \text{(Equation 19)}$$

and the steady state average queue length in the system (i.e., units waiting for the service plus those being serviced) is represented by the following algorithm:

$$E(q) = B \frac{\rho}{1-\rho} + m\rho \qquad \text{(Equation 20)}$$

where

B = probability that all servers are busy (see Appendix A)

m = number of servers

Note that $B = \rho$ when $m = 1$.

A plot of average waiting time in the system in multiples of service times versus facility utilization is given in Figure 3-14. A plot of average queue size divided by number of servers versus facility utilization is given in Figure 3-15.

In both cases when the facility utilization is higher than 0.8,,the average waiting time and the queue size start accelerating rapidly for small increases in workload volumes. This indicates that a point of saturation is imminent if the workload volume increases either steadily or through an impulse. For example, a delta increase of input volume, dv, will increase queue size by:

$$\left[1 + \frac{\rho(2-\rho)}{(1-\rho)^2}\right] \times E(t_s) \times dv \qquad \text{(Equation 21)}$$

Table 3-2 lists queue length increases for various values of utilization of a single-server facility. It clearly indicates that marginal system designs with high utilization could adversely impact throughput and response times.

Another important aspect of utilization lies in he area of feedback and control logic of production systems.

If the system logic were to simulate the movement of documents and data throughout the system for the purpose of control, the validity of the model and hence the effectiveness of the control

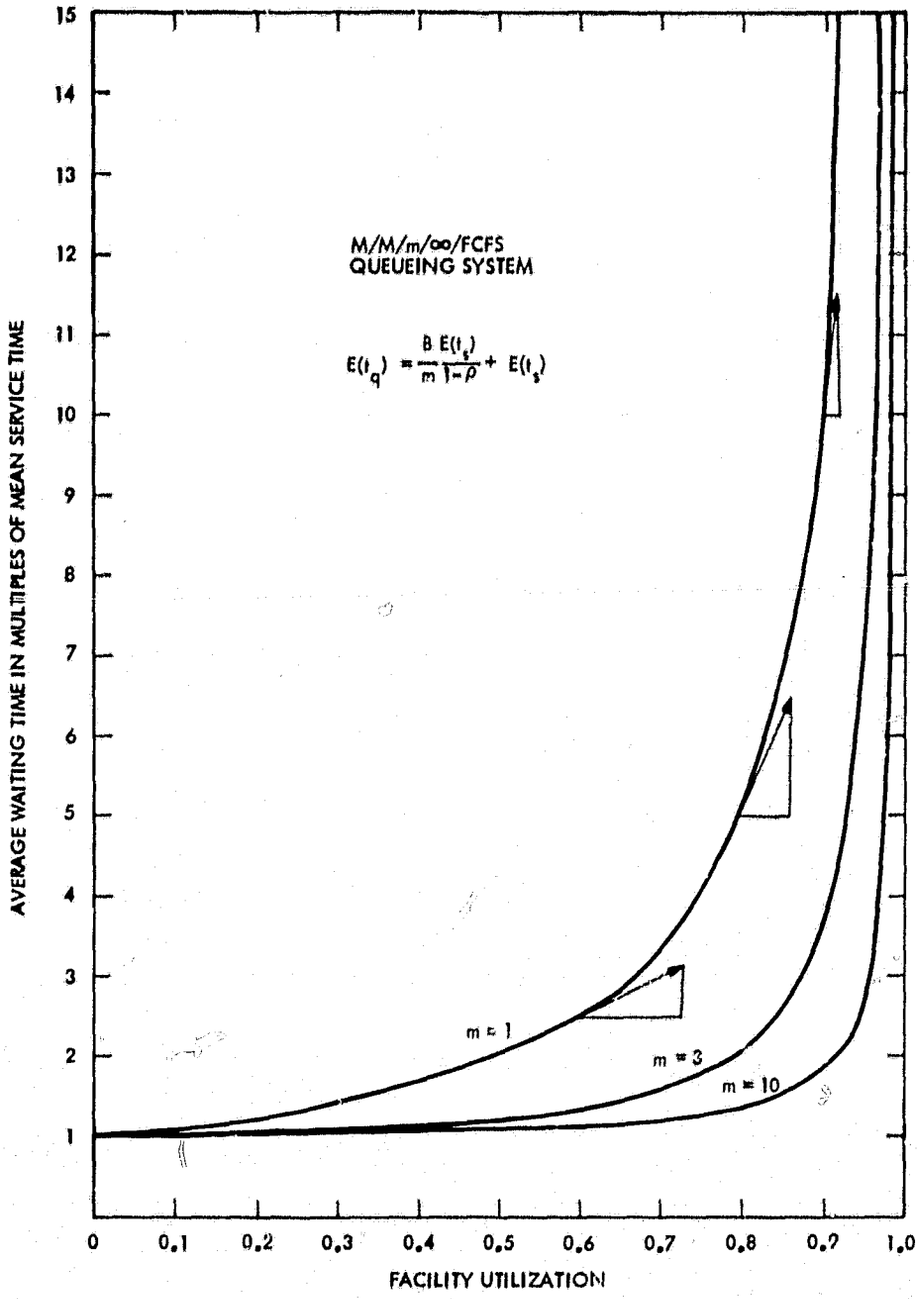

Figure 3-14. Average Waiting Time Versus Facility Utilization

ORIGINAL PAGE IS
OF POOR QUALITY

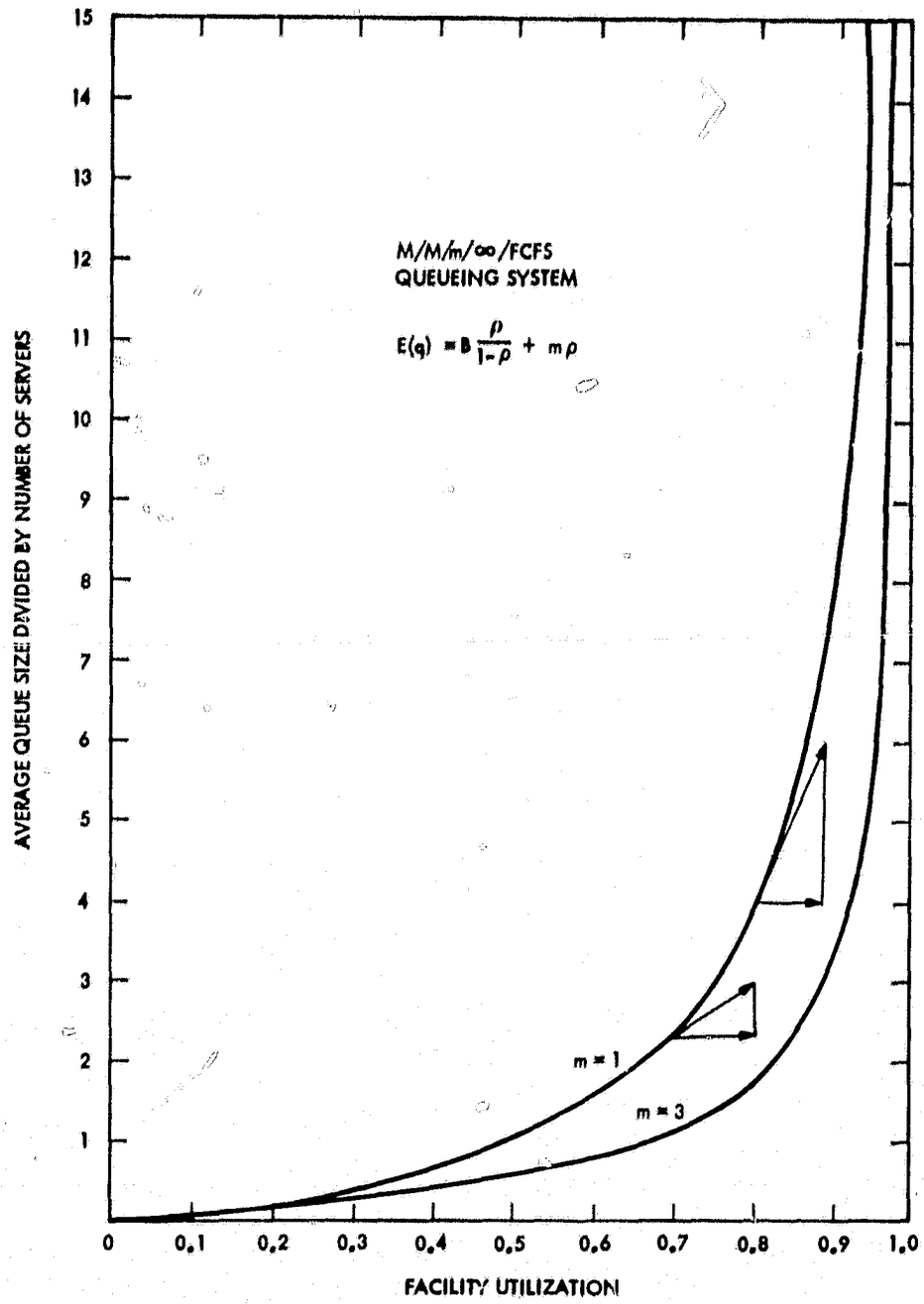

Figure 3-15. Average Queue Size Versus Facility Utilization

strategy could be adversely impacted for utilization factors exceeding 1.0 (this means departures and arrivals of transactions are not balanced). Figure 3-16, Case 2 illustrates a condition where the utilization factor is 1.0. If this were to happen unchecked, then the system network will be subject to perturbations as a result of loss of tracking and orderly control of transactions.

Table 3-2. Queue Length Increases for Various Values of Utiliztion

Utilization	Queue Length Increase	Queue Length Increase as Multiple of Base Case[a]
0.95	$400 \times E(t_s) \times dv$	67
0.90	$100 \times E(t_s) \times dv$	17
0.80	$26 \times E(t_s) \times dv$	4
0.70	$12 \times E(t_s) \times dv$	2
0.60	$6 \times E(t_s) \times dv$	1

[a]i.e., with 0.6 utilization.

Another aspect to utilization in a flow system network is storage capacity between nodes or work stations. If queue sizes can grow without restriction, then capacity has no bearing on utilization. A close look at storage capacities may, in all probability, reveal that restrictions are being imposed on queue sizes at certain points of the system network. The impact could be explained in the following scenario:

The system is made up of a series of stages. A calling unit can leave stage j if the storage capacity between stage j and j+1 is not full. But if it is full, the calling unit will remain in stage j and block any other calling unit from entering that stage. The result is a decrease in the utilization of stage j. If the blocking effect is allowed to happen in every stage, then the first stage will be blocked most frequently, and the one before the last will be blocked the least. If service times become insignificant compared to delay time due to blocking, then utilization of the network will be determined by the utilization of the first stage.

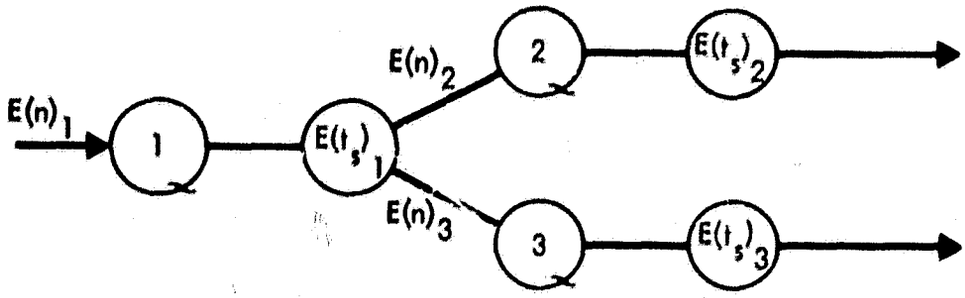

CASE 1 $\quad E(n)_1 < E(t_s)_1 \quad o \leq \rho < 1$

$$E(n)_1 = E(n)_2 + E(n)_3$$

CASE 2 $\quad E(n)_1 < E(t_s)_1 \quad \rho > 1$

$$E(n)_1 > E(n)_2 + E(n)_3$$

Figure 3-16. Impact of Utilization on Feedback and Control Strategy

5. Accuracy and Completeness

a. Accuracy. This measure seeks to determine the level of correct or incorrect identifications made at the system level. The numerics can be expressed in percent or probability of occurence. Two parameters of the accuracy measure are:

(1) False drop rate: Percentage level of incorrect subjects returned by the system.

(2) Miss rate: Percentage level of subjects not identified by the system although they are in files.

The above two parameters are composites of accuracy levels of various subsystems; i.e., the overall result of combinations of name search, fingerprint search, and verification to generate final results.

Subsystem accuracy level may be used for comparison purposes among alternatives, but it cannot be used as an indicator for overall system accuracy level since it is only one of several components.

An experimental design followed by analysis will be required in order to address adequately the subject of system accuracy.

The accuracy of file updates is considered a subset of the false drop and accuracy rates. Evaluators may look for methodology used in insuring accurate file update for various alternative designs.

b. Completeness. This measure points to the design approach taken to insure that all available information concerning a subject abailable to the Identification Division is included in the files in a timely manner and can be outputted on an Identification Division form when needed.

REFERENCES

1. FBI Identification Automation Study: AIDS III Evaluation Report, Vol VII, Top Down Functional Analysis, JPL Pub 80-79, Jet Propulsion Laboratory, Pasadena, California, August 1980.

2. Automation of FBI Identification Functions Feasibility Study: Top Down Functional Analysis, 5010-26, Jet Propulsion Laboratory, Pasadena, Calif., November 1979 (internal document).

3. Krick, E. V., Methods Engineering: Design and Measurement of Work Methods, John Wiley & Sons, November 1966.

4. Hillier, F. S., and Lieberman, G. J., Introduction to Operations Research, Holden-Day Inc., February 1968.

5. Sasieni, M., Yaspan, A., and Friedman, L., Operations Research: Methods and Problems, John Wiley & Sons, August 1967.

6. Barlow, R. E., and Proschan, F., Statistical Theory of Reliability and Life Testing, Holt, Rinehart and Winston, Inc., Berkeley, California, 1975.

7. Martin, J., System Analysis for Data Transmission, IBM Systems Research Institute, Prentice-Hall, Inc., Englewood Cliffs, N.J., 1972.

8. Meyer, P. L., Introductory Probability and Satistical Applications, Washington State University, Addison-Wesley Publishing Company, November 1966.

9. "Current Systems and Future Workloads," technical paper for Federal Bureau of Investigation, North American Rockwell, Information Systems Company, March 1971.

10. Jardine, A. K. S., Maintenance, Replacement, and Reliability, University of Birmingham, John Wiley & Sons, New York, 1973.

11. Ott, E. R., Process Quality Control, New Jersey State University, McGraw-Hill Book Company, 1975.

12. "General Purpose Systems Simulator," Programmer reference, Sperry UNIVAC Computer Systems, May 1974.

13. McCormick, E. J., Human Factors Engineering, Purdue University, McGraw-Hill Book Company, 1964.

APPENDIX A

PROBABILITY OF BUSY SERVERS

Values of Probability that All m Servers Are Busy, *B*

Facility Utilization	Number of Servers, m										
ρ	m=1	m=2	m=3	m=4	m=5	m=6	m=7	m=8	m=9	m=10	m=11
0.00	0.000	0.000	0.000	0.000	0.000	0.000	0.000	0.000	0.000	0.000	0.000
0.02	0.020	0.001	0.000	0.000	0.000	0.000	0.000	0.000	0.000	0.000	0.000
0.04	0.040	0.003	0.000	0.000	0.000	0.000	0.000	0.000	0.000	0.000	0.000
0.06	0.060	0.007	0.001	0.000	0.000	0.000	0.000	0.000	0.000	0.000	0.000
0.08	0.080	0.012	0.002	0.000	0.000	0.000	0.000	0.000	0.000	0.000	0.000
0.10	0.100	0.018	0.004	0.001	0.000	0.000	0.000	0.000	0.000	0.000	0.000
0.12	0.120	0.026	0.006	0.002	0.000	0.000	0.000	0.000	0.000	0.000	0.000
0.14	0.140	0.034	0.009	0.003	0.001	0.000	0.000	0.000	0.000	0.000	0.000
0.16	0.160	0.044	0.014	0.004	0.001	0.000	0.000	0.000	0.000	0.000	0.000
0.18	0.180	0.055	0.019	0.007	0.002	0.001	0.000	0.000	0.000	0.000	0.000
0.20	0.200	0.067	0.025	0.010	0.004	0.002	0.001	0.000	0.000	0.000	0.000
0.22	0.220	0.079	0.032	0.013	0.006	0.003	0.001	0.001	0.000	0.000	0.000
0.24	0.240	0.093	0.040	0.018	0.008	0.004	0.002	0.001	0.000	0.000	0.000
0.26	0.260	0.107	0.049	0.023	0.011	0.006	0.003	0.001	0.001	0.000	0.000
0.28	0.280	0.122	0.059	0.030	0.015	0.008	0.004	0.002	0.001	0.001	0.000
0.30	0.300	0.138	0.070	0.037	0.020	0.011	0.006	0.004	0.002	0.001	0.001
0.32	0.320	0.155	0.082	0.046	0.026	0.015	0.009	0.005	0.003	0.002	0.001
0.34	0.340	0.173	0.095	0.055	0.033	0.020	0.012	0.007	0.005	0.003	0.002
0.36	0.360	0.191	0.110	0.066	0.040	0.025	0.016	0.010	0.007	0.004	0.003
0.38	0.380	0.209	0.125	0.078	0.049	0.032	0.021	0.014	0.009	0.006	0.004
0.40	0.400	0.229	0.141	0.091	0.060	0.040	0.027	0.018	0.013	0.009	0.006
0.42	0.420	0.248	0.158	0.105	0.071	0.049	0.034	0.024	0.017	0.012	0.009
0.44	0.440	0.269	0.177	0.120	0.084	0.059	0.043	0.031	0.022	0.016	0.012
0.46	0.460	0.290	0.196	0.137	0.098	0.071	0.052	0.039	0.029	0.022	0.016
0.48	0.480	0.311	0.216	0.155	0.114	0.084	0.064	0.048	0.037	0.028	0.022
0.50	0.500	0.333	0.237	0.174	0.130	0.099	0.076	0.059	0.046	0.036	0.028
0.52	0.520	0.356	0.259	0.194	0.149	0.115	0.090	0.072	0.057	0.046	0.037
0.54	0.540	0.379	0.281	0.216	0.168	0.133	0.106	0.086	0.069	0.057	0.046
0.56	0.560	0.402	0.305	0.238	0.190	0.153	0.124	0.102	0.084	0.069	0.058
0.58	0.580	0.426	0.330	0.262	0.212	0.174	0.144	0.120	0.100	0.084	0.071
0.60	0.600	0.450	0.355	0.287	0.236	0.197	0.165	0.140	0.119	0.101	0.087
0.62	0.620	0.475	0.381	0.313	0.262	0.221	0.188	0.161	0.139	0.120	0.105
0.64	0.640	0.500	0.408	0.340	0.289	0.247	0.213	0.185	0.162	0.142	0.125
0.66	0.660	0.525	0.435	0.369	0.317	0.275	0.241	0.212	0.187	0.166	0.148
0.68	0.680	0.550	0.463	0.398	0.347	0.305	0.270	0.240	0.215	0.193	0.173
0.70	0.700	0.576	0.492	0.429	0.378	0.336	0.301	0.271	0.245	0.222	0.202
0.72	0.720	0.603	0.522	0.460	0.410	0.369	0.334	0.303	0.277	0.254	0.233
0.74	0.740	0.629	0.552	0.493	0.444	0.404	0.369	0.339	0.312	0.288	0.267
0.76	0.760	0.656	0.583	0.526	0.480	0.440	0.406	0.376	0.349	0.326	0.304
0.78	0.780	0.684	0.615	0.561	0.516	0.478	0.445	0.416	0.390	0.366	0.345
0.80	0.800	0.711	0.647	0.596	0.554	0.518	0.486	0.458	0.432	0.409	0.388
0.82	0.820	0.738	0.680	0.633	0.593	0.559	0.529	0.502	0.478	0.455	0.435
0.84	0.840	0.767	0.713	0.670	0.634	0.602	0.574	0.548	0.525	0.504	0.485
0.86	0.860	0.795	0.747	0.709	0.675	0.646	0.621	0.597	0.576	0.556	0.538
0.88	0.880	0.824	0.782	0.748	0.718	0.693	0.669	0.648	0.629	0.611	0.594
0.90	0.900	0.853	0.817	0.788	0.762	0.740	0.720	0.702	0.687	0.669	0.654
0.92	0.920	0.882	0.853	0.829	0.808	0.789	0.772	0.757	0.743	0.729	0.717
0.94	0.940	0.911	0.889	0.870	0.854	0.840	0.827	0.815	0.803	0.793	0.783
0.96	0.960	0.940	0.925	0.913	0.902	0.892	0.883	0.874	0.866	0.859	0.852
0.98	0.980	0.970	0.962	0.956	0.950	0.945	0.940	0.936	0.932	0.928	0.924

ORIGINAL PAGE IS
OF POOR QUALITY

ρ	m=12	m=13	m=14	m=15	m=16	m=17	m=18	m=19	m=20	m=25	m=30
0.30	0.000	0.000	0.000	0.000	0.000	0.000	0.000	0.000	0.000	0.000	0.000
0.32	0.001	0.000	0.000	0.000	0.000	0.000	0.000	0.000	0.000	0.000	0.000
0.34	0.001	0.001	0.000	0.000	0.000	0.000	0.000	0.000	0.000	0.000	0.000
0.36	0.002	0.001	0.001	0.001	0.000	0.000	0.000	0.000	0.000	0.000	0.000
0.38	0.003	0.002	0.001	0.001	0.001	0.000	0.000	0.000	0.000	0.000	0.000
0.40	0.004	0.003	0.002	0.001	0.001	0.001	0.001	0.000	0.000	0.000	0.000
0.42	0.006	0.005	0.003	0.002	0.002	0.001	0.001	0.001	0.000	0.000	0.000
0.44	0.009	0.007	0.005	0.004	0.003	0.002	0.002	0.001	0.001	0.000	0.000
0.46	0.012	0.009	0.007	0.005	0.004	0.003	0.002	0.002	0.001	0.000	0.000
0.48	0.017	0.013	0.010	0.008	0.006	0.005	0.004	0.003	0.002	0.001	0.000
0.50	0.022	0.018	0.014	0.011	0.009	0.007	0.006	0.005	0.004	0.001	0.000
0.52	0.029	0.024	0.019	0.016	0.013	0.010	0.009	0.007	0.006	0.002	0.001
0.54	0.038	0.031	0.026	0.021	0.018	0.015	0.012	0.010	0.008	0.003	0.001
0.56	0.048	0.040	0.034	0.028	0.024	0.020	0.017	0.015	0.012	0.005	0.002
0.58	0.060	0.051	0.044	0.037	0.032	0.027	0.024	0.020	0.017	0.008	0.004
0.60	0.075	0.064	0.056	0.048	0.042	0.036	0.032	0.028	0.024	0.012	0.007
0.62	0.091	0.080	0.070	0.061	0.054	0.048	0.042	0.037	0.033	0.018	0.010
0.64	0.110	0.098	0.087	0.077	0.068	0.061	0.055	0.049	0.044	0.025	0.015
0.66	0.112	0.118	0.106	0.095	0.086	0.077	0.070	0.063	0.057	0.035	0.022
0.68	0.156	0.142	0.128	0.117	0.106	0.097	0.088	0.081	0.074	0.048	0.032
0.70	0.184	0.168	0.154	0.141	0.130	0.119	0.110	0.101	0.094	0.064	0.044
0.72	0.214	0.198	0.183	0.169	0.157	0.146	0.135	0.126	0.117	0.083	0.060
0.74	0.248	0.231	0.215	0.201	0.188	0.176	0.165	0.154	0.145	0.107	0.080
0.76	0.285	0.267	0.251	0.236	0.223	0.210	0.198	0.187	0.177	0.136	0.105
0.78	0.325	0.307	0.291	0.276	0.262	0.248	0.236	0.225	0.214	0.169	0.136
0.80	0.369	0.351	0.335	0.319	0.305	0.292	0.279	0.267	0.256	0.209	0.173
0.82	0.416	0.399	0.382	0.367	0.353	0.339	0.327	0.315	0.303	0.255	0.217
0.84	0.467	0.450	0.434	0.419	0.405	0.392	0.380	0.368	0.356	0.307	0.268
0.86	0.521	0.505	0.490	0.476	0.462	0.450	0.438	0.426	0.415	0.367	0.327
0.88	0.579	0.564	0.550	0.537	0.524	0.513	0.501	0.490	0.480	0.434	0.395
0.90	0.640	0.627	0.614	0.603	0.591	0.581	0.570	0.560	0.551	0.508	0.471
0.92	0.705	0.694	0.683	0.673	0.663	0.654	0.645	0.636	0.628	0.590	0.557
0.94	0.773	0.765	0.756	0.748	0.740	0.732	0.725	0.718	0.711	0.680	0.653
0.96	0.845	0.839	0.833	0.827	0.822	0.816	0.811	0.806	0.801	0.779	0.759
0.98	0.921	0.918	0.914	0.911	0.908	0.905	0.903	0.900	0.897	0.885	0.874

ρ	m=35	m=40	m=45	m=50	m=55	m=60	m=65	m=70	m=80	m=90	m=100
0.52	0.000	0.000	0.000	0.000	0.000	0.000	0.000	0.000	0.000	0.000	0.000
0.54	0.001	0.000	0.000	0.000	0.000	0.000	0.000	0.000	0.000	0.000	0.000
0.56	0.001	0.001	0.000	0.000	0.000	0.000	0.000	0.000	0.000	0.000	0.000
0.58	0.002	0.001	0.001	0.000	0.000	0.000	0.000	0.000	0.000	0.000	0.000
0.60	0.003	0.002	0.001	0.001	0.000	0.000	0.000	0.000	0.000	0.000	0.000
0.62	0.006	0.003	0.002	0.001	0.001	0.000	0.000	0.000	0.000	0.000	0.000
0.64	0.009	0.006	0.003	0.002	0.001	0.001	0.001	0.000	0.000	0.000	0.000
0.66	0.014	0.009	0.006	0.004	0.002	0.002	0.001	0.001	0.000	0.000	0.000
0.68	0.021	0.014	0.010	0.007	0.005	0.003	0.002	0.002	0.001	0.000	0.000
0.70	0.031	0.022	0.015	0.011	0.008	0.006	0.004	0.003	0.002	0.001	0.000
0.72	0.044	0.032	0.024	0.018	0.013	0.010	0.008	0.006	0.003	0.002	0.001
0.74	0.061	0.046	0.036	0.028	0.021	0.017	0.013	0.010	0.006	0.004	0.003
0.76	0.083	0.065	0.052	0.042	0.034	0.027	0.022	0.018	0.012	0.008	0.005
0.78	0.110	0.090	0.074	0.061	0.051	0.042	0.035	0.029	0.021	0.015	0.011
0.80	0.144	0.121	0.102	0.087	0.074	0.063	0.054	0.047	0.035	0.026	0.020
0.82	0.186	0.160	0.139	0.121	0.106	0.093	0.081	0.072	0.056	0.044	0.035
0.84	0.235	0.208	0.184	0.164	0.147	0.131	0.118	0.106	0.087	0.071	0.059
0.86	0.293	0.265	0.240	0.218	0.199	0.182	0.167	0.153	0.130	0.110	0.094
0.88	0.361	0.332	0.307	0.284	0.264	0.246	0.229	0.214	0.187	0.165	0.146
0.90	0.440	0.412	0.386	0.364	0.343	0.325	0.307	0.291	0.263	0.238	0.217
0.92	0.529	0.503	0.479	0.458	0.438	0.420	0.404	0.388	0.359	0.334	0.312
0.94	0.629	0.607	0.587	0.568	0.551	0.535	0.519	0.505	0.479	0.455	0.434
0.96	0.740	0.724	0.709	0.694	0.681	0.669	0.657	0.645	0.624	0.605	0.587
0.98	0.864	0.855	0.846	0.838	0.831	0.823	0.816	0.810	0.797	0.786	0.775

APPENDIX B

ACRONYMS

ACS	Automated Classification System
AFRS	Automated Fingerprint Reader System
AHU	Anti-Halation Underlayer
AIDS	Automated Identification Division System
ANS	Automated Name Search
ATS	Automated Technical Search
ATSPS	Automated Technical Search Pilot System
AUTOCOR	Automated Correspondence Station (part of AIDS)
AUTORESP	Automated Response Generation (part of AIDS)
A&R	Automation and Research Section of Identification Division
BER	Bit Error Rates
BLO	Blocking Out
CCA	Computerized Contributor Abbreviated Name
CCH	Computerized Criminal History (part of NCIC)
CCN	Computerized Criminal Name
CCNR	Computerized Criminal Name and Record (part of AIDS)
CCR	Computerized Criminal (Arrest) Record (part of AIDS)
CIR	Computerized Ident Response File (part of AIDS)
CLASS-A	Classification-A
CLASS-B	Classification-B
CLASS-C	Classification-C
CLCK	Classification Check
CNR	Computerized Non-Ident Response File
COA	Cutoff Age
CPU	Central Processing Unit

CRS	Computerized Record Sent File (part of AIDS)
CRT	Cathode Ray Tube
CSORT	Centerline Sort
DATE STP	Date Stamp, Count and Log
DBMS	Data Base Management System
DEDS	Data Entry and Display Subsystem (part of AIDS III)
DENT	Data Entry
DENT-A	Data Entry-Cards
DENT-B	Data Entry-Documents
DOA	Date of Arrest (on f/p card)
DOB	Date of Birth (on f/p card)
ECL	Emitter Coupled Logic
EMI	Electromagnetic Interference
ENC	Encode Input Data-Cards
ENCDOC	Encode Input Data-Documents
ENCK	Encode Check-Cards
ENDOCK	Encode Check-Documents
ERR	Update Error File
EYE	Color of Eyes (on f/p card)
FBI	Federal Bureau of Investigation
FEP	Front End Processor
FIFO	First-In-First-Out
FLAB	Film Lab Processing/Computer
FLOAD	Film Load
FPC	Fingerprint Classification
FPCS	Fingerprint Correspondence Section of the Identification Division
f/p	Fingerprint

GDBMS	General Purpose Data Base Management System
GEO	Geographic Location (on f/p card)
GPSS	General Purpose Simulation System
HAI	Color of Hair (on f/p card)
HGT	Height (on f/p card)
IBM	International Business Machines Corporation
ICI	Image Comparison Identification
ICRQ	Image Comparison Request
ICS	Image Comparison Subsystem (part of AIDS III, actually used for image retrieval for manual comparison)
ICV	Image Comparison Verification
ID, I.D.	Identification Division
IDENT	Identification
JPL	Jet Propulsion Laboratory
KIPS	Thousands of Instructions per Second (as executed by a computer)
LEAA	Law Enforcement Assistance Agency
MAIL	Open Mail and Sort
MFILM	Image Capture Microfilm
MIPS	Millions of Instructions per Second (as executed by a computer)
MMF	Minutiae Master File
MOE	Measures of Effectiveness
MTBF	Mean Time Between Failures
MTR	Master Transaction Record
MTTR	Mean Time to Repair
NAM	Name (on f/p card)
NASA	National Aeronautics and Space Administration
NCIC	National Crime Information Center

NCR	National Cash Register Company
OCA	Local Identification Number (on f/p card)
OCR	Optical Character Recognition
OMB	Office of Management and Budget
ORI	Originating Agency Identification Number (on f/p card)
PCN	Process Control Number
PICS	PCN and Image Capture Subsystem (part of AIDS III)
PMT	Photomultiplier Tubes
POB	Place of Birth (on f/p card)
QC	Quality Control
QUERY	On-Line Query
RAC	Race (on f/p card)
READ	Quality Control Check, Read, Annotate
RFI	Radio Frequency Interference
RH	Relative Humidity
RVF	Ridge Valley Filter
SACS	Semi-Automatic Classification System
SAR	Semi-Automatic Fingerprint Reader
SEAR	Search Review
SEX	Reported Sex of a Subject (on f/p card)
SID	State Identification Number
SKN	Skin Tone (on f/p card)
SOC	Social Security Number (on f/p card)
SPM	Search Processor Module
SS	System Supervisor Subsystem (part of AIDS III)
SSM	Subject Search Module
SSRG	Subject Search and Response Generation Subsystem (part of AIDS III)

TDFA	Top Down Functional Analysis
TFC	Technical File Conversion
TR	Transaction Record
TRC	Transaction Control File
TSS	Technical Search Subsystem (part of AIDS III)
TTL	Transistor - Transistor Logic
VDENT-A	Verify Data Entry-Cards
VDENT-B	Verify Data Entry-Documents
VLSI	Very Large Scale Integration
WAND	Wand Out of System