N O T I C E

THIS DOCUMENT HAS BEEN REPRODUCED FROM MICROFICHE. ALTHOUGH IT IS RECOGNIZED THAT CERTAIN PORTIONS ARE ILLEGIBLE, IT IS BEING RELEASED IN THE INTEREST OF MAKING AVAILABLE AS MUCH INFORMATION AS POSSIBLE

DOE/JPL 955456-1
Distribution Category UC-97c

MONITORING AND CONTROL REQUIREMENT DEFINITION STUDY FOR DISPERSED STORAGE AND GENERATION (DSG)

FINAL REPORT

Volume V

October 1980

Prepared for

JET PROPULSION LABORATORY
CALIFORNIA INSTITUTE OF TECHNOLOGY

and

NEW YORK STATE ENERGY RESEARCH AND DEVELOPMENT AUTHORITY

Submitted by

GENERAL ELECTRIC COMPANY
CORPORATE RESEARCH AND DEVELOPMENT

GENERAL ELECTRIC

(NASA-CR-164053) MONITORING AND CONTROL REQUIREMENT DEFINITION STUDY FOR DISPERSED STORAGE AND GENERATION (DSG). VOLUME 5, APPENDIX D: COST-BENEFIT CONSIDERATIONS FOR PROVIDING DISPERSED STORAGE AND (General G3/44 N81-20542 Unclas 18904

JPL 9950-419
NYSERDA 80-15

DOE/JPL 955456-1
Distribution Category UC-97c

MONITORING AND CONTROL REQUIREMENT DEFINITION STUDY FOR DISPERSED STORAGE AND GENERATION (DSG)

SRD-80-042-V

FINAL REPORT

Volume V

October 1980

Appendix D

COST-BENEFIT CONSIDERATIONS FOR PROVIDING DISPERSED STORAGE AND GENERATION FOR ELECTRIC UTILITIES

Prepared for

JET PROPULSION LABORATORY
CALIFORNIA INSTITUTE OF TECHNOLOGY

(Contract No. 955456)

and

NEW YORK STATE ENERGY RESEARCH AND DEVELOPMENT AUTHORITY

(Agreement No. ER 320-78/79 EUET)

Submitted by

GENERAL ELECTRIC COMPANY
CORPORATE RESEARCH AND DEVELOPMENT
Schenectady, New York 12301

GENERAL ELECTRIC

FOREWORD

This Final Report is the result of a year-long effort on Monitoring and Control Requirement Definition Study for Dispersed Storage and Generation (DSG) conducted by the General Electric Company, Corporate Research and Development, for the Jet Propulsion Laboratory, California Institute of Technology, and the New York State Energy Research and Development Authority.

Dispersed storage and generation (DSG) is the term that characterizes the present and future dispersed, relatively small (<30 MW) energy systems such as those represented by solar thermal electric, photovoltaic, wind, fuel cell, battery, hydro, and cogeneration. To maximize the effectiveness of alternative energy sources such as these in replacing petroleum fuels for generating electricity and to maintain continuous reliable electrical service to consumers, DSGs must be integrated and cooperatively operated within the existing utility systems. To effect this integration may require the installation of extensive new communications and control capabilities by the utilities. This study's objective is to define the monitoring and control requirements for the integration of DSGs into the utility systems.

This final report has been prepared as five separate volumes which cover the following topics:

VOLUME I - FINAL REPORT

Monitoring and Control Requirement Definition Study for Dispersed Storage and Generation

VOLUME II - FINAL REPORT - Appendix A

Selected DSG Technologies and Their General Control Requirements

VOLUME III - FINAL REPORT - Appendix B

State of the Art, Trends, and Potential Growth of Selected DSG Technologies

VOLUME IV - FINAL REPORT - Appendix C

Identification from Utility Visits of Present and Future Approaches to Integration of DSG into Distribution Networks

VOLUME V - FINAL REPORT - Appendix D

Cost-Benefit Considerations for Providing Dispersed Storage and Generation of Electric Utilities

PRECEDING PAGE BLANK NOT FILMED

ACKNOWLEDGMENTS

Throughout this study we have benefited greatly from the help offered by many people who are knowledgeable in specific areas of the dispersed storage and generation technologies studied and in the fields of communications, control, and monitoring. We particularly wish to acknowledge the efforts of and discussions with Dr. Khosrow Bahrami and Dr. Harold Kirkham, each of whom have served as technical manager in the Jet Propulsion Laboratory, and Dr. Fred Strnisa, project manager, New York State Energy Research and Development Authority.

We also wish to thank the various people with whom we met during our utility visits. The following utilities have provided useful information regarding DSG activities at their organizations:

Niagara Mohawk Power Corporation, Syracuse, New York

San Diego Gas and Electric Company, San Diego, California

Blue Ridge Electric Membership Corporation, Lenoir, North Carolina

Public Service Electric and Gas Company, Newark, New Jersey

In addition, we thank our many associates in General Electric Company who have helped so much in our understanding of the selected DSG technologies and in the integration of DSGs into the existing electric utility system. In particular, we thank J.B. Bunch, A.C.M. Chen, M.H. Dunlap, R. Dunki-Jacobs, W.R. Nial, R.D. Rustay, and D.J. Ward.

The help of Dr. Roosevelt A. Fernandes of Niagara Mohawk Power Corporation in several phases of the work covered in this report is acknowledged with thanks. Also, Dr. Fred C. Schweppe, consultant, has been of considerable benefit in the conduct of this project and his efforts have been appreciated.

Harold Chestnut

Robert L. Linden

PRECEDING PAGE BLANK NOT FILMED

ABSTRACT

A major aim of the U.S. National Energy Policy, as well as that of the New York State Energy Research and Development Authority, is to conserve energy and to shift from oil to more abundant domestic fuels and renewable energy sources. Dispersed Storage and Generation (DSG) is the term that characterizes the present and future dispersed, relatively small (<30 MW) energy systems, such as solar thermal electric, photovoltaic, wind, fuel cell, storage battery, hydro, and cogeneration, which can help achieve these national energy goals and can be dispersed throughout the distribution portion of an electric utility system.

Cost benefit considerations are extremely important in obtaining the acceptance of dispersed storage and generation by the electric utilities. These considerations may involve somewhat different economic analyses depending on whether the generation is utility, customer, or combined ownership. It will be necessary to get acceptance of more easily understood methods for evaluating the economics of DSG because much of the benefits of DSG may accrue in the generation and transmission portions of the utility system while the costs tend to be centered in the distribution portion of that system.

Depending on the rating and availability of the DSG, the monitoring and control portion of the system may be relatively low in cost compared to the value of the energy supplied for DSGs in the 5 MW range and above and relatively high in cost compared to the smaller 10-50 kW units. The influence of other factors, such as reliability, capital costs, and other economic measures, can be important to utility and customer alike in judging the costs and benefits of DSGs.

PRECEDING PAGE BLANK NOT FILMED

TABLE OF CONTENTS

Section		Page
D1	INTRODUCTION	D1-1
	D1.1 Cost-and-Benefit Elements	D1-1
D2	ELEMENTS IN COST-AND-BENEFIT ANALYSIS	D2-1
	D2.1 Introduction	D2-1
	D2.2 Electric Utility System Characteristics	D2-2
	D2.3 Time Frame for Economic Comparisons	D2-2
	D2.4 Base Case and Initial Scenarios	D2-2
	D2.5 Energy Availability and Capacity Factors	D2-3
	D2.6 DSG System Cost Components	D2-3
	D2.7 DSG System Benefit Components	D2-6
D3	ELECTRIC UTILITY SYSTEM CHARACTERISTICS	D3-1
	D3.1 Generation, Transmission, and Distribution System	D3-1
D4	TIME FRAME OF DSG EQUIPMENT LIFE CYCLE	D4-1
	D4.1 Time Factors	D4-1
D5	ALTERNATIVES TO INITIAL SCENARIO	D5-1
	D5.1 Alternative Scenarios	D5-1
D6	APPLICATION OF COST-BENEFIT ANALYSIS CONSIDERATIONS TO NIAGARA MOHAWK COMPOSITE	D6-1
	D6.1 Description of NMPC Composite Characteristics	D6-1
	D6.2 Distribution DSG System Equipment	D6-1
	D6.3 Alternative Generation Costs without DSGs	D6-4
	D6.4 Nature of Possible DSG Alternatives	D6-4
	D6.5 DSG Technologies Characteristics (Assumed Representative Values)	D6-5
	D6.6 NMPC Composite Cost-and-Benefit Components	D6-5
	D6.7 Additional Cost Items in Cost-Benefit Evaluation	D6-8
	D6.8 Discussion of DSG Cost Benefits Applied to Niagara Mohawk Composite	D6-13
D7	CONCLUSIONS	D7-1
Appendix DI -	OBSERVATIONS ON COST-BENEFIT ANALYSIS METHODS	DI-1

PRECEDING PAGE BLANK NOT FILMED

LIST OF ILLUSTRATIONS

Figure		Page
D2.1-1	Iterative Design Process for Evaluating DSG Alternatives	D2-1
D3.1-1	Electric Utility System Showing Power System and DSG with Associated DSG Equipment	D3-2
D3.1-2	Automated Distribution Systems	D3-3
D4.1-1	Electrical Generation Capacity and Load Demand	D4-1
D4.1-2	Savings Due to Deferred Capital Investment . .	D4-2
D6.1-1	Nonautomated 13.2 kV Syracuse Composite Construction Diagram and Schedule for Years 1978-84 with Anticipated Changes	D6-2
D6.2-1	DDC, Interface, and Communication Equipment; DSGs and NMPC Distribution Composite	D6-3
D6.7-1	DDC Interface with DSGs	D6-11

LIST OF TABLES

D6.3-1	Equivalent Power Generation Rate Price versus Time When Power Is Generated	D6-4
D6.5-1	Assumed Representative Values for DSGs	D6-6

Section D1

INTRODUCTION

D1.1 COST-AND-BENEFIT ELEMENTS

The major interest of this study is focused on the monitoring and control requirements of Dispersed Storage and Generation (DSG). However, from the results of our utility visits, it is apparent that the utilities are deeply concerned with the economics, i.e., costs and benefits, of DSG. Since the benefits of DSG may accrue in the generation or transmission portions of the utility system while the costs tend to be centered in the distribution portion of the utility system, it is important that all persons concerned be aware of the way the costs and benefits of the whole system are analyzed and judged. Hopefully, this memorandum will provide the basis for a better understanding of the process of determining the system costs and benefits.

Alternative methods exist for supplying the energy needs of electric utility customers. Several dispersed storage and generation technologies are potentially available to accomplish these needs. The purpose of this appendix is to present the important cost-benefit considerations for providing DSG to electric utilities at the distribution level compared with alternative methods, including those which do not employ DSGs.

The costs being considered cover the total costs for DSG and the associated initial equipment, land, construction, installation, services, and the subsequent operation and maintenance costs. The costs for acquiring the necessary capital equipment are a part of the total costs. These costs will of course include added costs for the additional equipment and services to provide dispersed storage and generation, for the added remote monitoring and control equipment and installation, and for the added operating and maintenance costs associated with the dispersed storage and generation.

The benefits being considered include reduced costs for equipment, installation, services, operations, and maintenance which might have been planned or required but, by virtue of alternative methods being used, i.e., DSGs, may no longer be needed. Benefits also take into account the savings corresponding to reduced losses or reduced expenditures for energy. Benefits may be realized from reduced generation, transmission, or distribution cost. The benefit may be one-time sums because of the deferment of a particular investment or may be annual savings on a repetitive basis as a result of the elimination of energy purchases that would be required each year.

Cost-and-benefit elements to be taken into account also include the following:

- The use of an annual fixed charge rate (FCR), of the order of 15-25%, which represents the percentage of the total initial cost charged each year as an annual cost to recover costs of the equipment, installation, finance charges, taxes, and so forth, over the life of the equipment. This annual fixed charge component of costs should be converted to a present worth and should take into account the actual time in years during which the DSG expenses are incurred.
- The cost of the monitoring and control equipment and the associated electronics and the necessary software should be identified because the monitoring and control requirements are the focus of this study.
- The elimination of centralized generation and transmission equipment and services, which would otherwise be required if the DSG equipment were not installed, should be included as a benefit. DSG equipment may be added in smaller sizes that may more nearly compare with the load growth increments actually experienced.
- The operating and maintenance costs including the cost of nonrenewable fuel energy which may be required to meet the customer's load.
- The time of day and period of year when the renewable energy is likely to be available should be taken into account as part of the economic evaluation. Thus, solar energy in the south which is available during the day, when the summer peak loads occur, may have a greater value than solar energy in the north where the peak load is in the winter when the available solar energy is considerably reduced from the summer peak.

Section D2

ELEMENTS IN COST-AND-BENEFIT ANALYSIS

D2.1 INTRODUCTION

A cost-benefit analysis is but a part of a more comprehensive iterative process that involves the performance of the overall electric utility system as well as the judgment criteria for determining which of several possible alternative systems provides the most satisfactory result. Figure D2.1-1 illustrates this iterative design process for evaluating DSG alternatives.

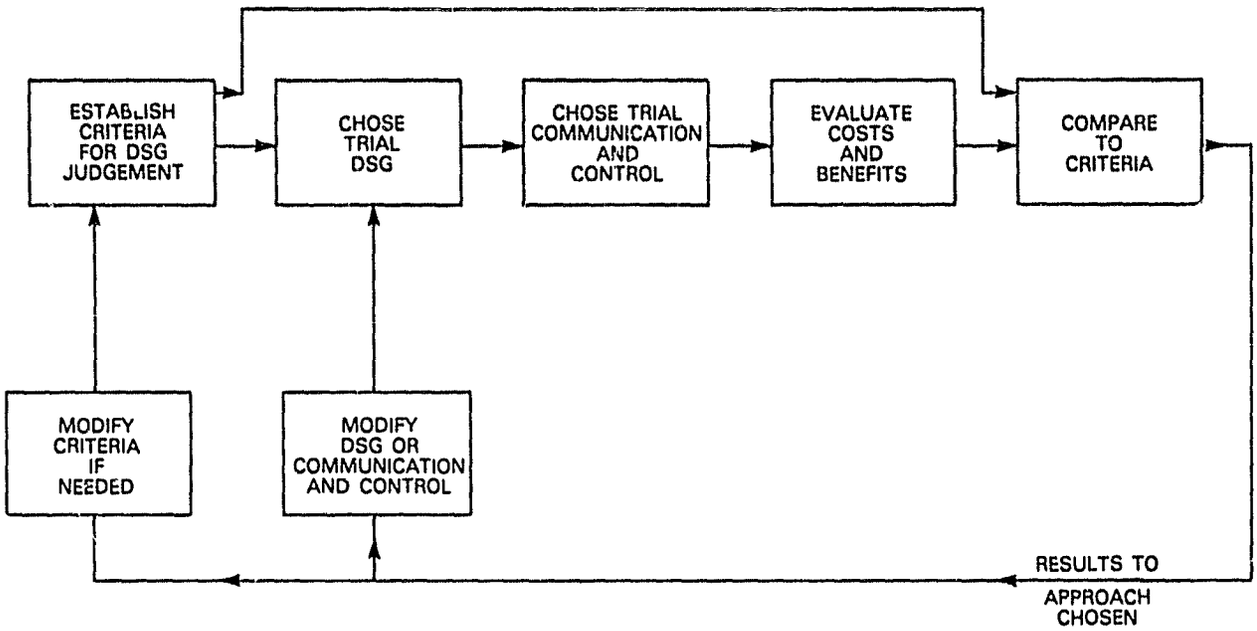

Figure D2.1-1. Iterative Design Process for Evaluating DSG Alternatives

The initial activity is the establishment of the criteria for the judgment of a DSG system which may be later modified depending on the final results. In addition to the criteria for judgment in itself, there must be a definition of the environment of the distribution system of which the DSG is a part. This environment includes the nature of the distribution system load growth with time (in years) as well as the financial environment in terms of interest rates, inflation rates, and other economic factors.

Next the selection of a trial DSG is made in terms of the technology, the size unit, its location, and other factors. Although an experienced system planner may acquire a good grasp of which DSG technologies are most suitable for specific applications, the process is likely to require a certain amount of trial and error.

After the DSG has been chosen, appropriate communication and control choices must be made to complete the overall DSG system that is to be evaluated in terms of its costs and benefits relative to alternative systems that are available. Although the preceding activities are not a part of the cost-and-benefit analysis, nevertheless it is not possible to proceed with the cost-benefit analysis unless the preceding steps have been carried out.

D2.2 ELECTRIC UTILITY SYSTEM CHARACTERISTICS

The electric utility system consists of generation, transmission, and distribution. What is being considered here is primarily a change in the distribution portion by the addition of DSG and in the monitoring and control of that DSG portion. The cost-benefit analysis will emphasize primarily the differences in costs and benefits among alternative DSGs and more conventional generation and transmission means as well as alternative monitoring and control means of a particular DSG.

Although dispersed generation will take place in the geographic area assigned to distribution, the benefits in the form of improved efficiency of generation and reduced losses in transmission may be realized in the geographic areas where the generation and transmission equipments are located. Added investments in equipment in the distribution area may be counterbalanced by changed investments for equipment in the distribution, generation, and transmission areas. In short, it will be necessary to consider the various costs and benefits of alternative system configurations of the whole system and not just the distribution network.

Depending on whether or not the electric utility system has distribution automation and control (DAC), the extent of the communications, remote monitoring and control, and other elements of the distribution-DSG may be considerably altered. Part of the initial description of the electric utility system involved should include the extent to which DAC is present.

D2.3 TIME FRAME FOR ECONOMIC COMPARISONS

The nature of costs for electric utility equipment is typical of the costs of capital goods; namely, initial equipment costs and installation costs which occur at the time of installation; operating and maintenance costs which occur on an annual basis, and energy costs which may be changing with time. In order to provide a reasonably long interval of time over which the initial costs can be distributed, it is worthwhile to use a time period at least comparable to the DSG equipment life cycle as a basis for making economic comparisons. For many purposes it is convenient to consider the DSG equipment on the basis of its costs to infinity with cyclic replacements every t years corresponding to the equipment life.

D2.4 BASE CASE AND INITIAL SCENARIOS

Each utility may be different from the others, and the conditions of load growth, energy costs, and interest rates may vary with time. For certain purposes, it may be attractive to think of a general solution to the DSG cost-benefit question. However, for the present time, much insight can be gained by analyzing a specific utility as a base case, and using one or more scenarios that show the changes in load growth, energy costs, and economic conditions. Doubtless, it will be necessary to study several utilities before a representative pattern may be apparent.

The base case and initial scenarios will have to be considered for the utility without DSG and with DSG. The cost-and-benefit results for the alternatives can then be compared. In considering various DSG alternatives, advantage must be taken of the local conditions which may favor one DSG over another. Availability of favorable amounts of solar energy, wind, or water, or the availability of low-cost real estate near certain loads may be particularly beneficial.

D2.5 ENERGY AVAILABILITY AND CAPACITY FACTORS

Inherent in the use of certain DSGs is the fact that the technology depends on the presence of specific conditions that either are not controllable or are only partially controllable by the utility, i.e., the sun, the wind, or water. When a DSG is part of an overall utility system, there must be other sources of generation or purchased power which can be used to provide the necessary backup or reserve capacity. Although a particular DSG may have a nameplate or nominal rating of a specific value, e.g., 1 MW, the available power at any particular time may range from 1 MW to 0 MW, depending on the availability of the prime energy source. The term "capacity factor" is used to relate the time average available power rating to the nominal nameplate power rating. The manner in which the capacity factor is defined is of importance to the cost-and-benefit evaluation.

As noted earlier, the relative timing of load demands and the DSG energy availability should also be evaluated in considering the benefits associated with a given DSG. In this evaluation it may be necessary to go to an hour-by-hour and day-by-day representation of load requirements and energy availability if this degree of detail is considered essential. It should be kept in mind, however, that there will still remain the uncertainty in the assumptions even though the numerical analysis may be accurate and detailed.

D2.6 DSG SYSTEM COST COMPONENTS

Cost components can be grouped into three major categories:

- Equipment costs
- Installation costs,
- Operations and maintenance costs.

Because there can be extensive communication and control costs associated with the integration of DSG into the utility network, it is important to recognize all the equipment items associated with a distribution-DSG system as well as other items that should be included in the three major cost categories.

The equipment costs cover the supplier costs of the equipment that is the essential DSG system as well as the supplier costs of other distribution-DSG system items such as:

- The communication link with the Distribution Control Center (DCC)
- The interface and control equipment located at the DCC which enables the distribution dispatcher to interact with the remote DSG
- The interface and control equipment which is located at the DSG which interfaces the communication link and the DSG local control equipment
- The system DSG power protection interface equipment which enables the DSG power equipment to operate compatibly with the utility distribution network

The essential DSG system should include not only the electrical generation means and its local control, but also the balance of plant as well as any necessary associated expenses (for example, the cost of the land and dam for a hydro DSG system).

Installation costs are a one-time cost and should include not only the hardware installation cost, but also the software installation costs as well. The logic development and programming of the scheduling computer, for example, should be included in the distribution-DSG system installation costs.

Operations and maintenance costs include not only personnel costs and consumable materials for operations and maintenance, but the energy costs or losses associated with the distribution-DSG system. With increasing energy costs, the operations and maintenance cost category may represent a significant portion of the total cost.

If storage or backup equipment is included as an added element to the overall system, this element will have its own equipment, installation, and operations and maintenance cost categories to be taken into account.

An analytical expression for the present value of the cost to infinity for each item of equipment follows:

Present value of total costs to infinity = PV{First Cost + Installation + Operations and Maintenance}

$$= \{V^n[FC_j)(i_{ne}) + FC_j(i_{nL})(\%Inst)]FCRxPVF'_m + (FC_j)(PVF_m)((\%(O+M))\}PV_T$$

where single payment present worth factor $= V^n = [1/_{(1+i)}]^n$

i = interest rate

e_e = inflation rate for equipment; varies with equipment

e_L = inflation rate for labor

n = years from present to installation date of equipment

FC_j = equipment cost (1978 dollars) for item of equipment

$i_{ne} = (1+e_e)^n$ = inflation of equipment cost from 1978 to year n

$i_{nL} = (1+e_L)^n$ = inflation of labor cost from 1978 to year n

%Inst = installation cost as a percentage of equipment cost; varies with equipment

FCR = fixed charge rate on investment costs

$PVF'_m = \sum_{j=1}^{m} \left[\frac{1+e_c}{1+i}\right]^j$ = present value factor for a uniform series of payments from year of installation, n, through end of equipment life, (n+m)

$m = T$ = equipment lifetime

e_c = inflation of GNP

$PVF_m = \sum_{j=1}^{m} \left[\frac{1+e_L}{1+i}\right]^j$ = present value factor for a uniform series of payments from year 1978 to year m

((%(O+M)) = annual O+M cost as a fraction of equipment cost

$PV_m = 1/_{[1-(1+\Delta)^{-T}]}$ = present value factor for cyclic replacements every T years to infinity

$T = m$ = equipment lifetime

Δ = net discount rate = $i-e_L$

D2.7 DSG SYSTEM BENEFIT COMPONENTS

In considering the overall benefits of the distribution-DSG system, it is convenient to group the benefits into four major components:

- Investment-related savings
- Interruption-related savings
- Customer-related savings
- Operations and maintenance

Investment-related savings are the result of deferring previously planned expenditures for such items as new substations, new transformers, new feeders, or new generation and transmission facilities. With the higher cost of real estate and mortgage money, investment-related savings can represent a significant element of the benefits.

Interruption-related savings refer to the fact that with dispersed storage, generation failures at the central stations and on the major transmission lines can be overcome in part through the use of the dispersed storage and generation capacity.

Customer-related savings represent benefits that accrue from fewer customer outages, less expenses to answer customer complaints, and so forth.

Operations and maintenance benefits refer to manpower, material, and energy cost savings that may result from use of renewable resources in contrast to the purchase of fossil fuels. Unattended operation of DSG as contrasted with the use of manned sites would represent another operation and maintenance benefit.

Section D3

ELECTRIC UTILITY SYSTEM CHARACTERISTICS

D3.1 GENERATION, TRANSMISSION, AND DISTRIBUTION SYSTEM

An electric utility system is traditionally described in terms of its generation, transmission, and distribution system characteristics as indicated schematically in Figure D3.1-1. The generation, transmission, and distribution structure is generally a plurality of generation sources and transmission lines which interconnect generation sources to loads, either directly through large transmission ties or indirectly through a distribution network.

The addition of dispersed storage and generation will in general require some sort of energy management system as shown in Figure D3.1-1. In considering the costs and benefits of a particular electric utility system it is important to be aware of the characteristics of the electric utility system with and without dispersed storage and generation. For example, generation as shown in Figure D3.1-1 by a single block actually consists of several sources of generation, placed at different geographical locations, with different size generating units, different thermal efficiencies, and therefore different costs. These multiple sources of generation may have different standby and startup costs and therefore different choices are to be made depending on each particular generator's characteristics. Furthermore, these generators may have different costs at different amounts of loading. For example, some units may have certain inefficiencies in valving if they are operated at one load level as contrasted with considerably different efficiencies when operated at neighboring load levels. Furthermore, an incremental amount of load which is supplied at a certain time of day may result in a considerably different cost than at a different time because more or less efficient generators may be employed.

Regarding transmission, depending on the relative location of the source of power generation and the location of the load, there may be different amounts of losses in transmission. Thus the transmission characteristics can have a significant effect on the cost of the energy supplied to a load in a particular part of a given network.

The distribution characteristics may also have quite a marked influence on the cost of supplying a given load. By use of communication and control it is possible for the Energy Management System and the Distribution Dispatch Center to schedule more economically the amount of generation which takes place at the local distribution level. Hence it is quite important that the characteristics of the electric utility system, for which dispersed storage and generation is being considered, be understood in detail in terms of performance, cost, and availability.

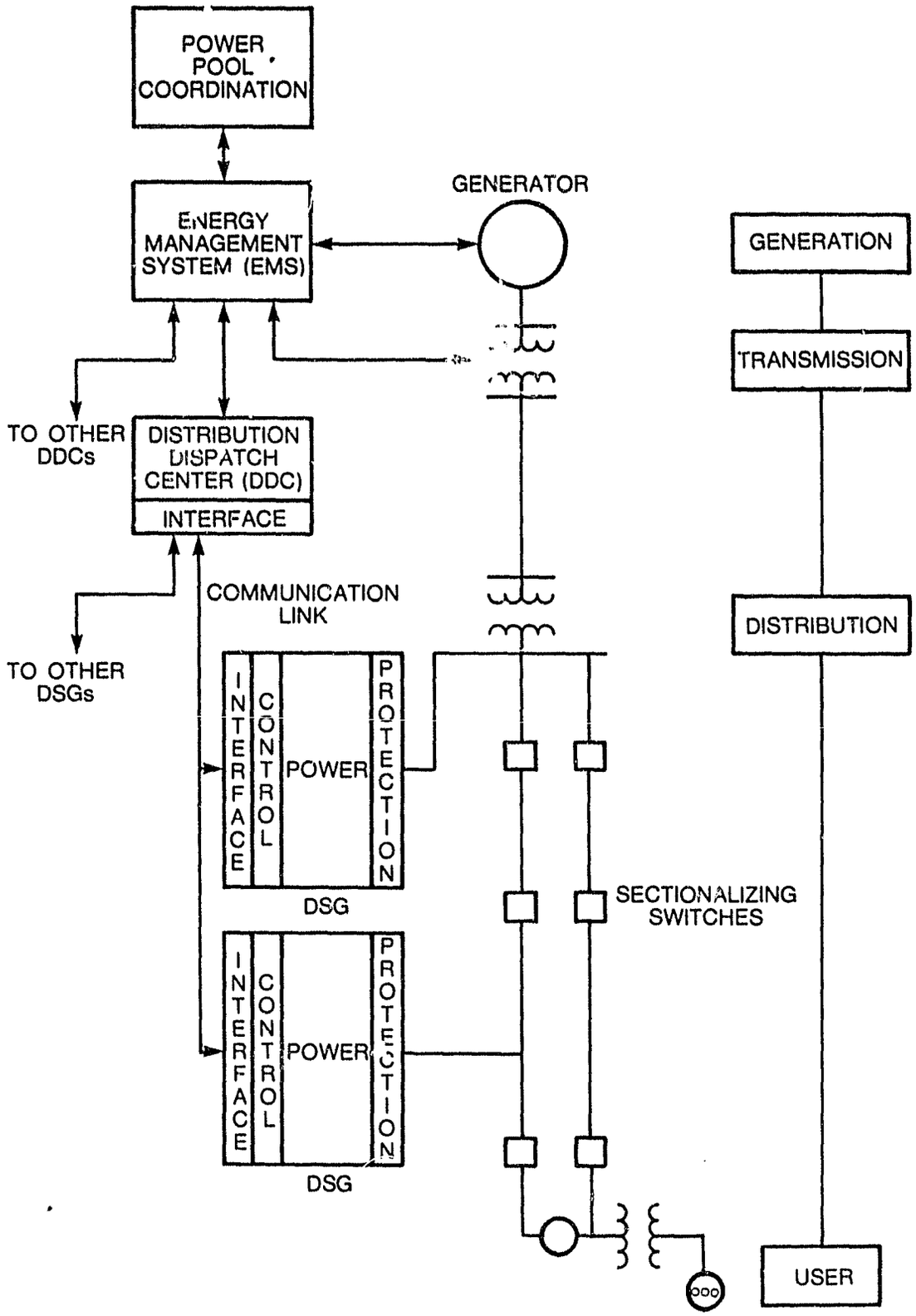

Figure D3.1-1. Electric Utility System Showing Power System and DSG with Associated DSG Equipment

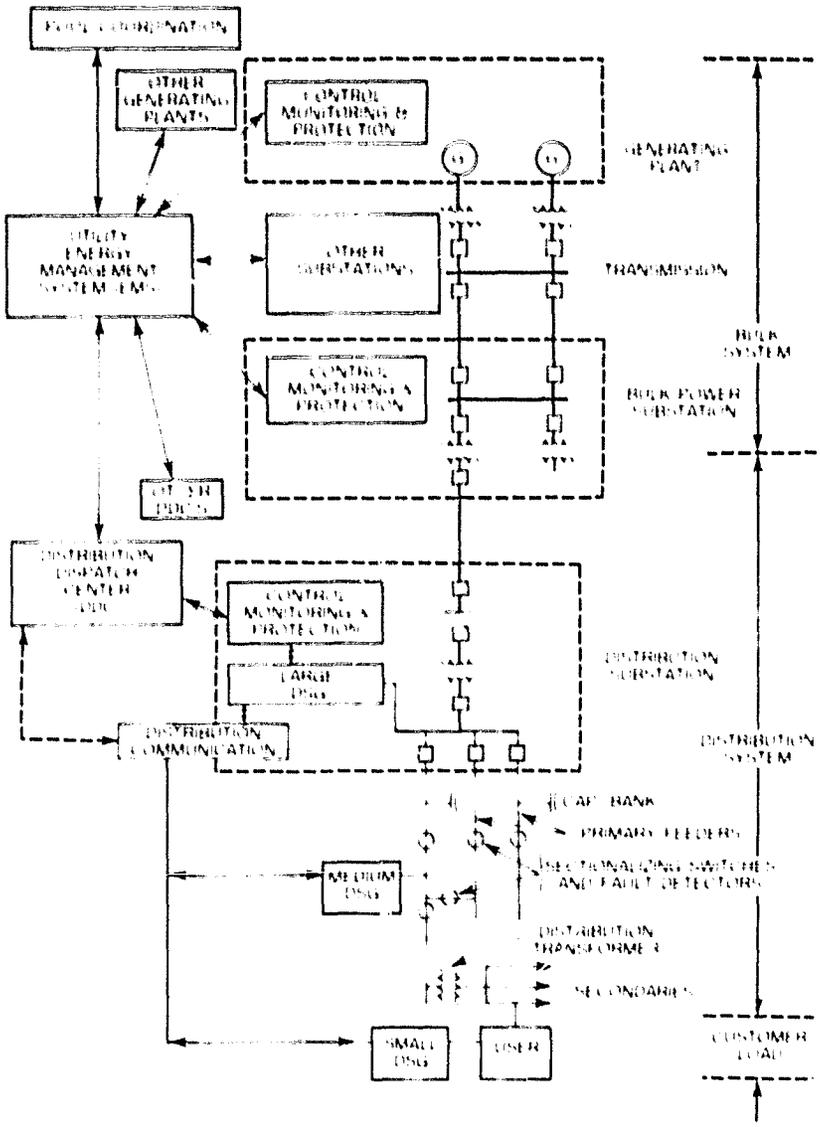

Figure D3.1-2. Automated Distribution Systems

A trend of increasing importance to electric utility systems is the use of distribution automation and control (DAC), in which such functions as substation control and protection, load management, sectionalizing switch control, and control at the user level are accomplished. Figure D3.1-2 shows schematically a representative arrangement of distribution automation and control equipment to make up an automated distribution system (ADS). The power system has substation control and protection which is connected to the DDC through communication means. Load management equipment is also connected to the DDC. In addition, load management, through distribution communication, is connected to a number of other control means at the distribution substation, feeder, and user levels. Distribution communication could enable the DDC to be connected to dispersed storage and generation equipment as well. It is evident that detailed considerations of the extent to which distribution automation

and control equipment and services may be present on the electric utility system should be known as one endeavors to establish the costs and benefits of the use of DSG.

Section D4

TIME FRAME OF DSG EQUIPMENT LIFE CYCLE

D4.1 TIME FACTORS

Costs for electrical utility equipment have a number of time factors which are important. Like most capital equipment, there is a life cycle for commercial DSG equipment that starts with its installation and ends at the time the equipment is removed and replaced with a new version of the then current model for that equipment. It is this equipment life cycle that is important since it influences the time period over which the original equipment cost and the equipment installation cost must be spread.

In the case of DSG electronics the equipment life may be of the order of 10 to 15 years, while for the DSG power and protection equipment the equipment life may more likely be from 20 to 40 years. Since it is necessary that the costs and benefits for alternative DSGs and conventional means of power generation be compared for a common time interval, it is frequently desirable for that common time interval to be an infinite time period so that these differences in equipment lives can be more properly taken into account.

Another aspect of change that affects DSG installation is the influence of growth in electrical load with time. Traditionally, as shown in Figure D4.1-1, the electrical load demand has been assumed to grow at some fixed rate per year. The generation capacity was periodically increased to always stay ahead of the load demand. Depending on the amount of the load growth, and the unit size of the generation capacity added, the time intervals will be more or

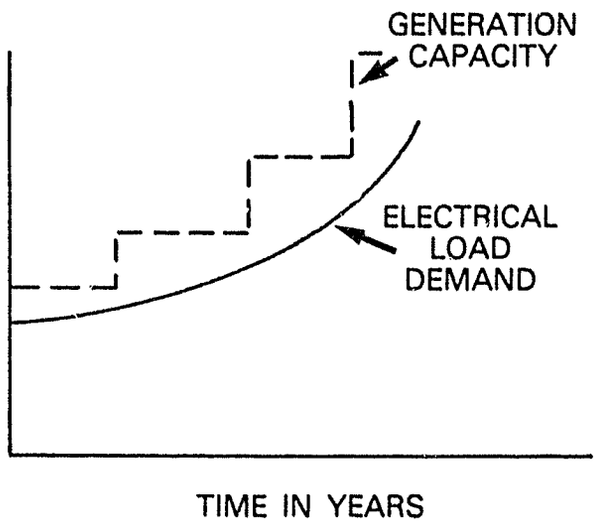

Figure D4.1-1. Electrical Generation Capacity and Load Demand

less frequent. Dispersed storage and generation tends to be of smaller sized units and therefore the additions to generation capacity can be made more frequently and not involve as great an amount of unused generation capacity after the installation of each new generation unit.

Timing of the introduction of new generation capacity brings up the possibility of deferring certain other elements of major capital expenditures, not only of generation and transmission, but also of major capital items such as distribution substations and their transformers. Since the deferral of large costs can have a significant and tangible benefit during the time period of deferral, this deferral can represent a desirable form of benefit which may be realized with the use of DSG. Figure D4.1-2 shows how the deferral by a time, Δt, in years of an equipment installation can produce a net saving of investment and other costs during the Δt period. Since the deferred equipment presumably must be bought after Δt, and must be replaced indefinitely thereafter, the net saving determined by the deferred equipment installation appears to take place during the time period Δt.

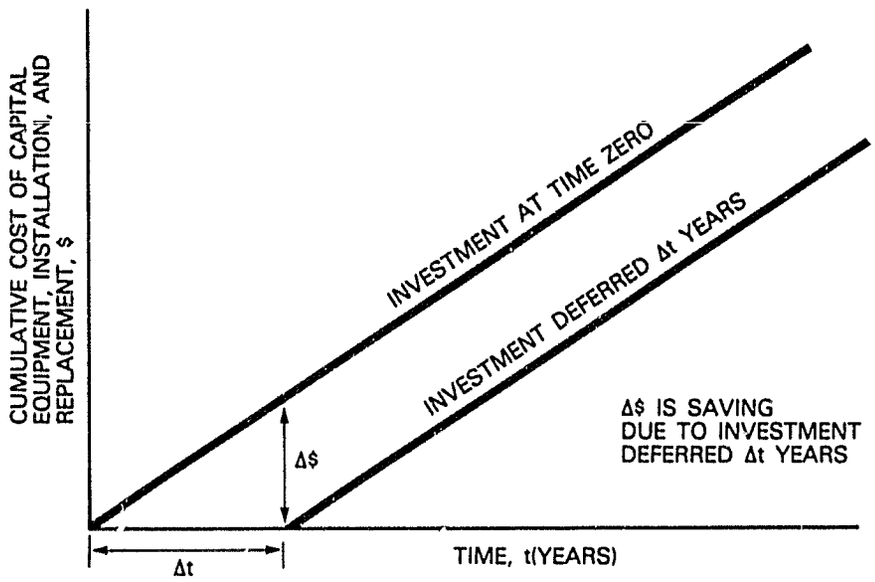

Figure D4.1-2. Savings Due to Deferred Capital Investment

Section D5

ALTERNATIVES TO INITIAL SCENARIO

D5.1 ALTERNATIVE SCENARIOS

The initial scenario considered in this discussion of cost and benefits of dispersed storage and generation assumes that there is a certain load-growth schedule and a schedule for adding DSGs. The alternatives consider added generation of DSG technologies of specific power ratings at different locations in the original electric utility system. The influence of these distribution changes on generation and/or transmission investments should also be included in the cost and benefit evaluations. The alternatives may also include a different timing of DSG additions.

In this case we will build our consideration of alternatives around an electric utility that is similar to the Niagara Mohawk Power Corporation, which has many different sources of generation at present. These generation sources include nuclear (610 MW), oil (1,950 MW), coal (1,370 MW), hydro (660 MW), other utilities (1,890 MW), and the Power Authority of the State of New York (PASNY) (2,370 MW), where the generation from other utilities and PASNY is not a firm commitment except with prior agreement. The total of all the load demand amounted to 5,480 MW in 1978, which is a winter peak load.

It is assumed that no energy management system is being used at the distribution level so that there is no existing monitoring and control equipment going to the distribution substations at which the DSG will be located.

Specific assumptions concerning alternatives are:

- Installed MW for each distribution substation is known or can be estimated.
- Distribution DSG remote monitoring and control equipment needed is known. This will permit the initial equipment, installation, operating, and maintenance costs to be determined.
- The distribution DSG system protection equipment is known.
- DSG characteristics as far as energy availability, capacity factor, DSG cost components, and DSG system benefits are generically known and will be determined in detail as part of the cost calculations.

Section D6

APPLICATION OF COST-BENEFIT ANALYSIS CONSIDERATIONS TO NIAGARA MOHAWK COMPOSITE

D6.1 DESCRIPTION OF NMPC COMPOSITE CHARACTERISTICS

In order to illustrate the application of the proposed cost-benefit analysis to an actual utility distribution network, use will be made of a representative portion of NMPC's Syracuse area network.

Figure D6.1-1 shows the nonautomated 13.2 kV Syracuse composite construction diagram and schedule for the years 1978-84. The maximum load in 1978 for the three substations of the composite was approximately 50 MW.

The three main network substations are Pine Grove, Fly Road, and Bridgeport, which represent, respectively, suburban, urban, and rural distribution substation categories. These terms are described in an approximate fashion as follows:

Suburban - residential and apartment load

Urban - mostly commercial and light industrial load

Rural - light load and longer circuit miles in a less densely populated area

Over eight years, including the six-year period represented in Figure D6.1-1, electrical load will grow from 3 to 5% annually amounting to about 20 MW. An additional 30 to 40 MVA of load on the three 13.2 kV substations is caused by the conversion of 4 kV feeders to 13.2 kV sections. Spot load additions of commercial shopping centers, residential growth, and industrial parks are estimated to amount to another 40 MVA of load. Thus for the three 13.2 kV substations shown, there are load additions amounting to almost 100 MVA. However, in terms of firm load at any one time, a figure of 60 MW probably represents a more reasonable number for the additional generation capacity that will be required.

D6.2 DISTRIBUTION DSG SYSTEM EQUIPMENT

Regarding the distribution DSG system equipment that is planned for this Syracuse area, the following are assumed to be required:

- Suitable DSG power equipment with associated DSG control, protection, and switchgear equipment
- A distribution dispatch center (DDC) with interface equipment capable of handling 20 DSGs
- Communication links (probably telephone) to connect the DDC to each of the DSGs
- DSG system power protection interface equipment at each DSG (the equipment for three DSGs is shown in Figure D6.2-1).

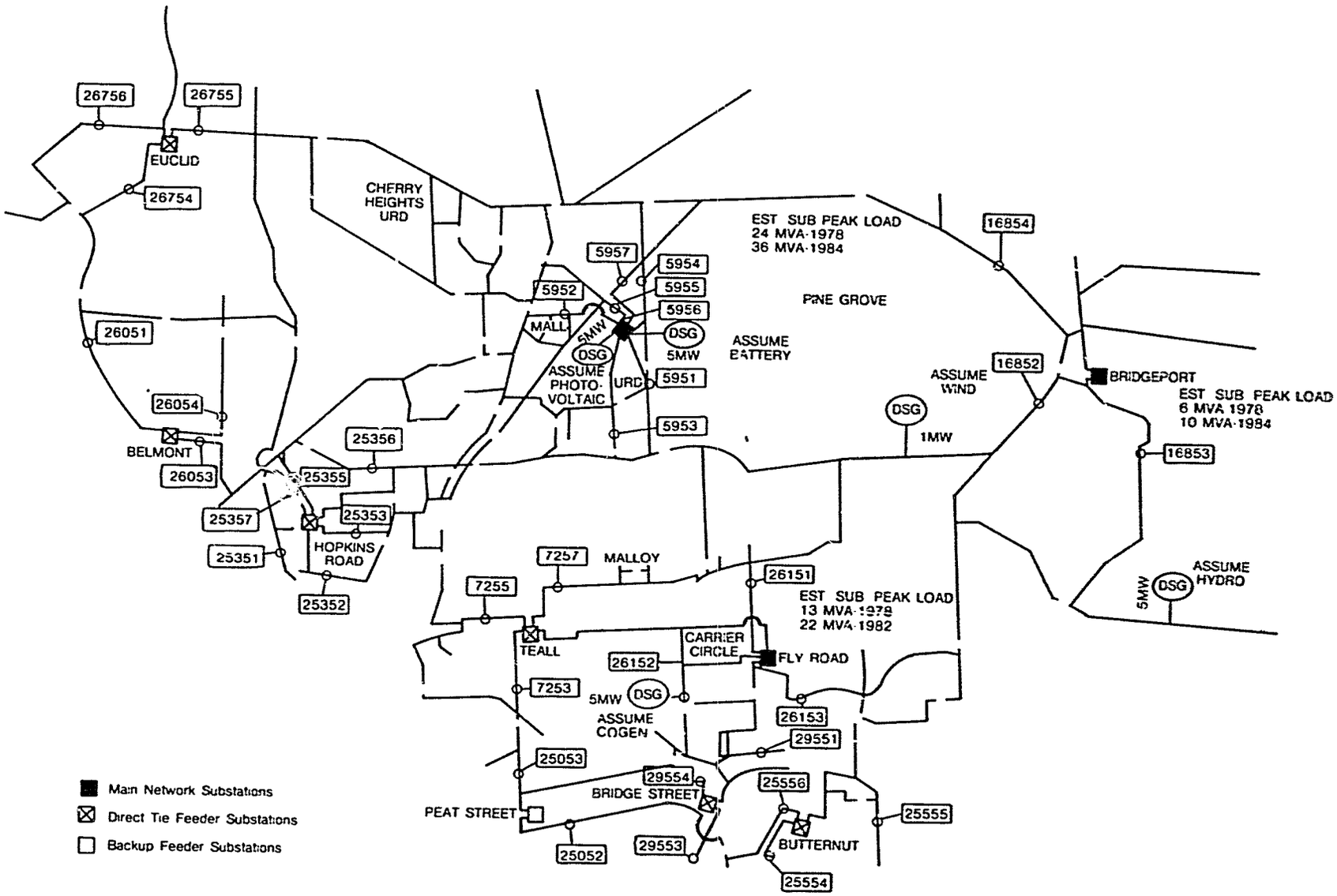

Figure D6.1-1. Illustrative DSG Locations and Types-Conceptual Design Only

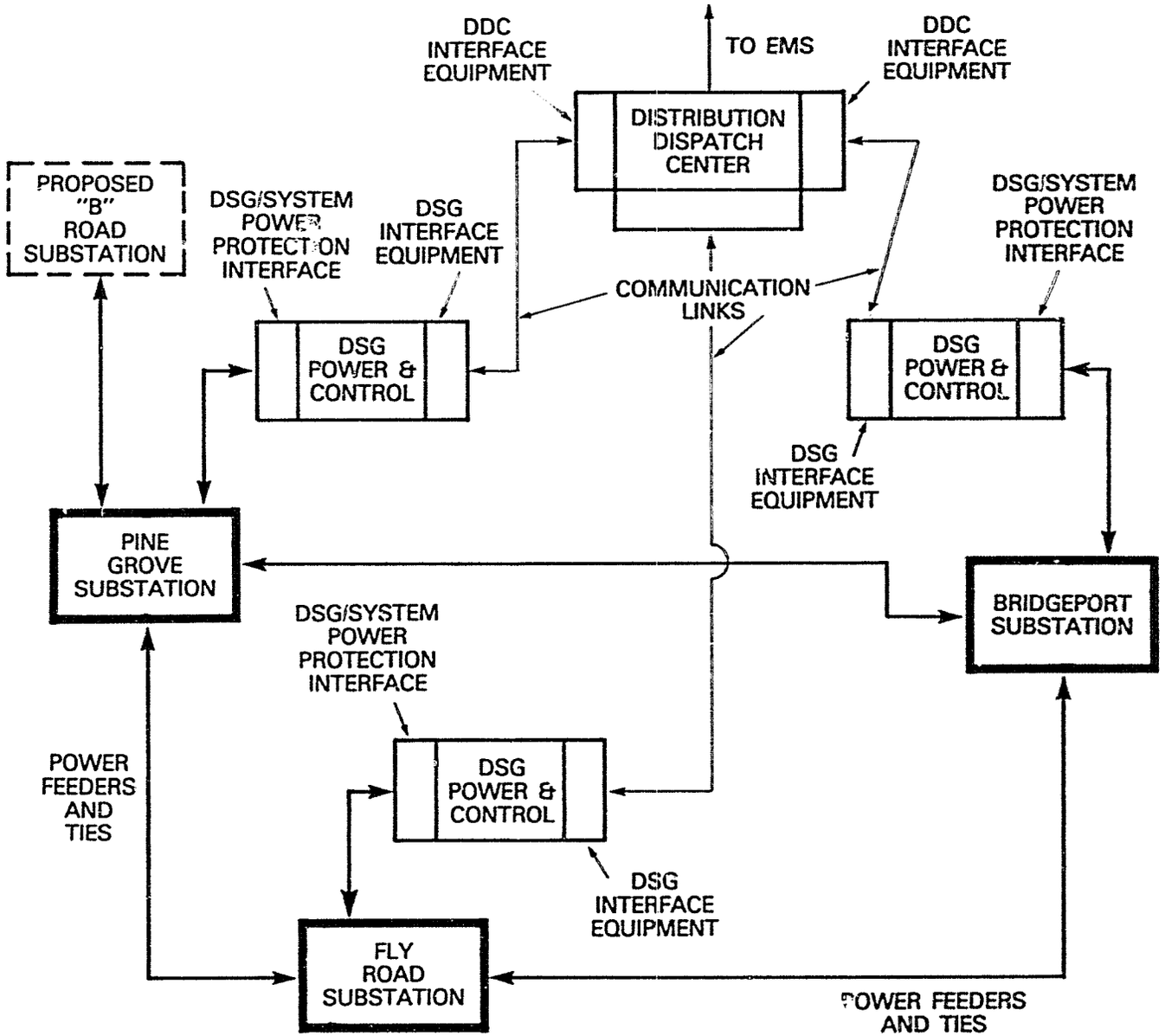

Figure D6.2-1. DDC, Interface, and Communication Equipment; DSGs and NMPC Distribution Composite

D6.3 ALTERNATIVE GENERATION COSTS WITHOUT DSGs

In the absence of DSGs as described in Section D6.2, the additional loads noted would have to be supplied by other generating means. As a way of determining the cost of alternative means for generating the power supplied by the DSG, it will be assumed that there will be established prices for power generated by these alternative sources. Thus, as shown by Table D6.3-1, time of day and day of week when the DSG power is available to the distribution system will establish the equivalent generation rate price that can be credited to the DSG. A further breakdown into month of the year as well as into a finer division of the time of the week can be made if this is needed and desired. Data such as these are generally obtainable in an actual system from economic dispatch information or, in the case of a simulated cost solution, from a generation production cost estimate.

Table D6.3-1

EQUIVALENT POWER GENERATION RATE PRICE VERSUS TIME WHEN POWER IS GENERATED

Time When Power is Generated	Equivalent Power Generation Rate Price ($/kWh)
Weekday, daily peak (8 a.m.-9 p.m.)	P_p
Weekday, off peak (9 p.m.-8 a.m.)	P_{op}
Weekend, any time	P_e

For purposes of analysis, the time frame for the DSG equipment cost-benefit analysis should be considered to be to infinity with the DSG electronics having an equipment life of 15 years and the DSGs having appropriate life spans ranging from 10 to 40 years.

D6.4 NATURE OF POSSIBLE DSG ALTERNATIVES

Although it is not intended that a detailed analysis be made here of all the possible DSG alternatives, an effort will be made to identify the nature of the choices that must be resolved in the decision process. These choices include the following:

- Kinds of DSG technologies - includes such factors as equipment cost per kW of installed capacity, availability as a capacity factor, DSG MW rating, and so forth.
- Location of DSG for each technology - depends on DSG characteristics including natural availability of energy. Some DSGs can be placed only at certain locations.

- Size of DSG units - some DSG technologies lend themselves to small sizes (2 MW or less); others to medium sizes (2 MW to 10 MW); and others to 10 MW and up.
- Number and timing of DSG units - because the monitoring and control of each DSG must be handled separately, the cost of monitoring and control equipment tends to be proportional to the number of DSG units installed. The cost of the DSG equipment tends to be proportional to the rating of the DSG units. By installing separate DSG units over a longer time, the cash outflow can be reduced. However, more DSG units will be required, and a greater amount of monitoring and control equipment will be needed.

D6.5 DSG TECHNOLOGIES CHARACTERISTICS (ASSUMED REPRESENTATIVE VALUES)

Table D6.5-1 shows assumed values for DSG cost, capacity factor, and nominal size, which are some of the important characteristics for the seven DSG technologies considered. The numbers shown are estimated values that have been selected to illustrate a representative range. They are not intended to provide a basis for making specific selections of particular DSGs, but rather to illustrate the fact that there are a number of different characteristics and that the specific values of these characteristics may vary widely from DSG to DSG.

D6.6 NMPC COMPOSITE COST-AND-BENEFIT COMPONENTS

Referring to Figure D6.2-1 in which the several distribution substations are shown to have different ratings for 1978 and 1988, let us assume that the added DSG capacity ratings will be respectively

Δ Pine Grove = 10 MVA

Δ Bridgeport = 5 MVA

Δ Fly Road = 5 MVA

Because the fuel cell has the lowest energy cost shown in Table D6.5-1, and because the size is satisfactory, assume that fuel cells will be installed. The added capital cost for DSG equipment will be

$$20 \text{ MVA} \times 1000 \frac{\text{kVA}}{\text{MVA}} \times 350 \text{ \$/kVA} = \$7{,}000{,}000/20 \text{ MVA}$$

The installation costs for the DSG are assumed to be 80% of the equipment costs.

$$0.40 \times \$7{,}000{,}000 = \$2{,}800{,}000$$

Note: Fuel cell cost of $350/kVA assumed to include converter cost.

Table D6.5-1

ASSUMED REPRESENTATIVE VALUES FOR DSGs

DSG Technology	DSG Cost $ Per kW (1978 $)	Other Major Elements Required (but not included in COST)	Time Availability in Per-Unit of Time	Nominal Rating in MW
Solar Thermal Electric	1400		0.30	1-10
Photovoltaic	4500-5000	Converter	0.30	0.1-5
Wind	1000		0.30	0.1-5
Fuel Cell	350	Converter	0.85	2-25
Storage Battery	350-450	Converter	0.30	2-20
Hydro	500-1000	Dam	0.50	1-25
Cogeneration	300	(Process)	0.3-0.80	1-20

For a fixed charge rate of 20%, the annual cost for DSG equipment and installation will be

0.2 x $14,400,000 = $2,880,000/year for the fuel cell.

With the fuel cell operating at a 40% capacity factor, the fixed cost of generation in terms of $ per kWh is

$$\frac{\$2,880,000}{20,000 \text{ kW} \times 0.40 \times 8,760 \text{ hrs}} = 0.041 \text{ \$/kWh}$$

The energy charge for fuel assumed as $0.03/kWh represents another component of the cost of the fuel cell DSG and should be included as part of the operating cost.

Assuming that the remainder of the O&M costs are equal to 5% of the equipment cost, this will amount to

$$\frac{\$8,000,000 \times 0.05}{20,000 \text{ kW} \times 0.40 \times 8,760 \text{ hrs}} = 0.006 \text{ \$/kWh}$$

The total installed cost per year per kWh is therefore

0.041 $/kWh INITIAL COST

0.030 $/kWh ENERGY COST

0.006 $/kWh O&M

0.077 $/kWh TOTAL

Consider the alternative to the DSG fuel cell to be power generated at the following costs:

Weekday, daily peak, 10 hrs @ p_p = $0.075/kWh

Weekday, off peak, 14 hrs @ p_{op} = $0.035/kWh

Weekend 24 hrs/day = $0.030/kWh

Supplying power at these rates for 10 hours per day of peak weekday operation, 14 hours per day of off-peak, and the remainder of 80% of the week at the weekend rate we have the following:

10 hrs x 5 days @ \$0.075/kWh	= \$3.750/kW
14 hrs x 5 days @ \$0.035/kWh	= \$2.450/kW
[(168) hrs x 0.8 - 120 hrs] @ \$0.03/kWh	= \$0.432/kW
	\$6.632/kW

$$\frac{\$6.632/\text{kW}}{134.4 \text{ hrs}} = \$0.049/\text{kWh}$$

Thus, it would appear that the use of fuel cells is less economical by \$0.077/kWh - \$0.049/kWh = \$0.028/kWh

For a year in which 20,000 kW are being used 8760 x 0.8 hrs, this amounts to an added cost of

20,000 kW x 8,760 x 0.8 hrs x 0.028 \$/kWh = \$3,924,480

If, instead of fuel cells, it were possible to use hydrogeneration at \$1000/kW and a 50% availability factor, the cost calculations would be modified as follows:

20 MW means that there will be an annual capital charge of

20,000 kW x \$1000/kW x 1.8 x 0.20 = \$7,200,000

which covers the cost of equipment and installation.

Taking into account the 0.50 availability of the hydropower, the cost per kWh becomes

$$\frac{\$7,200,000}{20,000 \text{ kW} \times 0.5 \times 8760 \text{ hrs}} = \$0.0822/\text{kWh}$$

There is no fuel charge, but there is an operating and maintenance charge that will be assumed to be 5% of the equipment cost as was previously the case

$$\frac{\$7,200,000 \times 0.05}{20,000 \text{ kW} \times 0.5 \times 8760} = \$0.0041/\text{kWh}$$

The total installed cost per year per KWh is therefore

INITIAL COST	\$0.0822/kWh
ENERGY COST	0.0000
O&M	0.0041
TOTAL	\$0.0863/kWh

Using the same power generation costs as were used above, the cost of equivalent generation becomes

10 hrs x 5 days @ \$0.075/kWh = \$3.750/kW

[(168 hrs x 0.5) - 50] @ \$0.035/kWh = \$1.190/kW

$$\frac{\$4.940/kW}{84\ hrs} = \$0.0591/kWh$$

In this case the conventional equivalent generation means is again less expensive than the dispersed generation by

\$0.0863/kWh - \$0.059/kWh = \$0.027/kWh

It should be noted that for some cases of small hydrogeneration it may be possible to find sites for generation where the dam, power plant, and location for additional generators are available and favorable to increased hydrocapacity. Circumstances such as these are described in the reports Assessment of Hydropower Restoration and Expansion in New York State,* and Estimates of the Costs of Renewable Energy Technologies for New York State.†

Cost for hydrogeneration might be as low as \$500/kW. For low capital costs such as these, the cost of hydrogeneration may be less than for conventional equivalent generation means. Thus, it is necessary to consider each DSG installation on its own merits to take into account the particular benefits that may be associated with that installation and energy source.

D6.7 ADDITIONAL COST ITEMS IN COST-BENEFIT EVALUATION

The preceding section has been devoted to a comparison of the costs and benefits of alternative DSG technologies. The additional items to be considered in this section include:

- DDC control and monitoring equipment for remote control of several DSGs
- Communication equipment for transmitting commands and data from the DDC to each of the several DSGs and from each of the DSGs back to the DDC
- DSG power protection equipment at the interface between DSG and the utility distribution network

*Report No. 78-6, New York State Energy Research and Development Authority and the Power Authority of the State of New York, Polytechnic Institute of New York, Brooklyn, N.Y., August 1978.

†Urban Systems Research and Engineering, Inc., Cambridge, Mass., 2 July 1979.

Figure D6.7-1 shows how a single DDC control and monitoring equipment that is interconnected to a central energy management system can interface with many DSGs, perhaps 20 to 30, that supply the distribution power system at various points such as at distribution substations or other feeder locations. Thus the cost of a single DDC control and monitoring equipment can be shared among the 20 to 30 DSGs connected to it. Each of the DSGs shown on Figure D6.7-1, however, requires its own communication equipment, DSG interface equipment, and DSG power protection equipment. The DSG control and power equipment shown in Figure D6.7-1 has already been costed, and its energy benefits have been noted as part of the consideration of alternative DSG technologies under the analysis performed in Section D6.6. In performing this analysis the three types of equipment noted above were assumed to be in place, whereas in reality their cost had not yet been included.

The cost of the DDC control and monitoring equipment, C_{DDC}, covers the price of the interfaces, displays, information processors, and memory capable of handling N DSGs. Thus the proportionate equipment cost of the DDC equipment for n individual DSGs is

$$(C_{DDC})_{nDSGs} = \frac{(n)}{N} C_{DDC}$$

There will also be installation costs covering hardware and software preparation that can be expressed as a per unit portion of the equipment cost, i.e.,

$$\text{Installation Cost} = (\text{Install}_{pu}) \text{ Equipment cost}$$

The total equipment and installation cost of the DDC for n DSGs is therefore,

$$\frac{n}{N} C_{DDC} (1 + \text{Install}_{pu}), \text{ and}$$

on an annual basis, with a fixed charge rate, FCR, this amounts to

$$\frac{n}{N} C_{DDC} (1 + \text{Install}_{pu}) \text{ FCR}$$

Assuming that the annual operating and maintenance costs can be expressed as per unit value, $(O+M)_{pu}$, of the initial equipment cost, then the total annual cost of the DDC for n DSGs is

$$\frac{n}{N} C_{DDC} [(1 + \text{Install}_{pu}) \text{ FCR} + (O\&M)_{pu}]$$

With estimated values of

$$C_{DDC} = \$400,000$$

$$n/_N = 4/20, \text{ corresponding to four DSGs}$$

Install pu = 0.8

FCR = 0.20

$(O\&M)_{pu}$ = 0.05,

4/20 ($400,000) [1.8 x 0.20 + 0.05] = $32,800/yr for the proportional annual costs of DDC for four substations.

The cost of the communication equipment will depend somewhat on the means for communication that are employed. For purposes of illustration, let us consider telephone lines as a basis for comparison with other communication means. For a 1200-1800 baud line including mileage charge, local wiring, and data set charge, a monthly charge of $250 per DSG would result in $12,000 per year for four DSGs.

The cost of DSG power protection equipment, C_{DSGpp}, is for the additional relaying, breakers, and other decision making means that may be required for each DSG power equipment with remote control of the DSG/distribution system interface over the relays, power switching, and breakers, and so forth, that would be needed without the remote control. There may be some equipment of this sort at each DSG.

Using the initial equipment cost for power protection, one can add one-time installation costs and annual operating and maintenance charges to obtain an expression for the total annual cost of the DSG power protection equipment for n DSGs to be:

$$n\ C_{DSGpp}\ [1(+\ Install_{pu})\ FCR + (O\&M)_{pu}].$$

For assumed values of

n = 4

C_{DSGpp} = $25,000

$Install_{pu}$ = 0.8

FCR = 0.20

$(O\&M)_{pu}$ = 0.05

4 ($25,000) (1.8 x 0.20 + 0.05) = $41,000/yr

The sum of these three additional items of annual costs for the four DSGs that are being considered in this example for NMPC is then

Cost DDC control + monitoring equipment	=	$32,800/yr
Cost DDC-DSG communications		12,000/yr
Cost DSG power protection equipment	=	41,000/yr
TOTAL		$85,800/yr

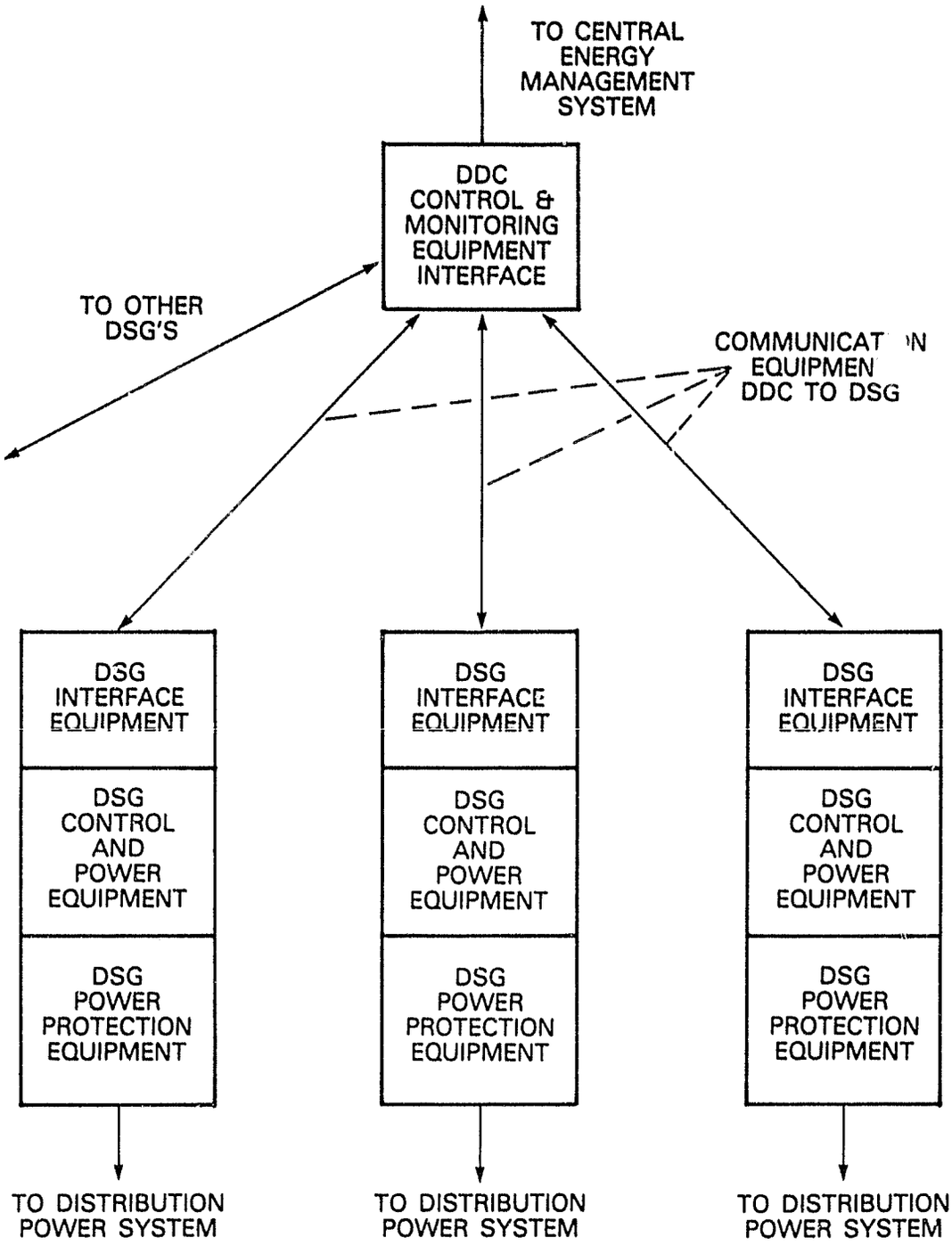

Figure D6.7-1. DDC Interface with DSGs

With these annual cost charges being liquidated over a year in which 20,000 kW were produced for 0.8 x 8760 hrs, this means the cost per kWh amounts to

$$\frac{\$85,800}{20,000 \times 0.8 \times 8760} = \$0.001/\text{kWh}$$

Comparing this very modest cost for additional equipment to the cost of approximately $0.077/kWh for the four DSGs described in Section D6.5, one notes that the DSG costs are appreciably greater than those for monitoring and control.

An added source of benefits that may occur through the use of DSG is that brought about by a deferral of a major capital investment such as a new substation. The equipment cost involved may be of the order of magnitude of 1 million dollars for a period of time of the order of two to four years.

If it is not necessary to make an investment, annual costs of the investment can be saved for as long as the investment is not actually made. For the cases where the cost analyses are carried out to infinity, there is no need to consider the cost of replacements or the end of equipment life. If the investment can be deferred d years, the annual charges do not occur in those d years. Depending on the rate of interest, r, and inflation, i, where the difference $r-i=\Delta$, the present value, PV, of the savings due to a deferral of charges from the first to the dth year is

$$PV_d(\Sigma C) = C \sum_{j=1}^{d} \left(\frac{1}{1+\Delta}\right)^i$$

where C is the annual fixed cost for the investment.

In the case of NMPC, suppose it were possible to defer for a period of two years a proposed substation at "B" Road that is in the vicinity of the Pine Grove substation. The "B" Road substation was estimated in 1978 to cost $675,000, including installation, and its usefulness was considered to be infinite. With an annual fixed charge rate of 20% the $675,000 deferred investment corresponds to an annual savings, Sa, which amounts to

$$Sa = \$675,000 \times 0.20 = \$135,000/\text{yr}$$

For two years' deferral and $\Delta=0.04$, the deferral factor is 1.89 times the annual cost savings. Thus the present value of the savings by deferral of the investment for two years is

$$PV_{\text{substation deferral}} = \$135,000 \times 1.89 = \$255,200$$

This sum of $255,200 that would be saved by deferring the investment for the substation can be used to reduce the annual charges to the customer. For an interest rate of 10% and a 30-year life

this will amount to 0.106 x $255,200 = $27,046 annually. This annual savings due to the 2-year deferral of the substation amounts to a benefit of approximately the same order of magnitude as the annual costs for the DDC charges for the 3 substations.

It should be noted that the benefits for the substation deferral are not, in this case, being attributed to the presence of a DSG. The calculations were performed merely to provide an indication of the order of magnitude of the benefits that might be derived from an investment deferral.

D6.8 DISCUSSION OF DSG COST BENEFITS APPLIED TO NIAGARA MOHAWK COMPOSITE

The above consideration of DSG costs and benefits applied to the Niagara Mohawk Composite provides an interesting insight into the relative magnitudes, and therefore importance, of the several components of costs and benefits involved. However, it should be emphasized that the preceding analysis has been rather brief and certainly warrants a more thorough treatment for any specific proposed DSG installation. From these data, however, the following observations were made:

- Assuming that there is more than one DSG technology that might be used by a distribution network, the DSG having the lowest dollars/kW capital cost and at the same time a high-capacity factor, i.e., available energy/nameplate energy, should be utilized. This results from the fact that the capital cost for many DSG technologies' equipment may be considerably higher than the cost of the fuel energy required.
- In the assumed case of hydrogeneration, for example, even with a zero energy cost, the cost of electrical generation, because of higher priced generation equipment and facilities, can be greater than the cost of generation by existing conventional means.
- Comparing the cost of DDC + DSG monitoring and control equipment to the cost of the DSG power generation equipment, the monitoring and control appear to be in the range of 3-5% of the other DSG costs. Because the cost of equipment to handle the DDC and DSG monitoring and control requirements is not likely to change with different DSGs as much as is the cost of the DSGs, changes in the costs for DSG monitoring and control are not likely to be critical in affecting the overall cost of the combined DSG and DDC systems.
- The benefits associated with deferring investment costs, for the range of values that were considered, do not appear to be large in comparison to the total costs of generation equipment, installation, and operations and maintenance.

- There are doubtless other benefits that may occur in the generation and transmission portions of the utility system that could represent significant amounts of money that have not been included in this analysis. More efficient use of the generators may be possible by more favorable settings of the steam valves. With more power generated within the distribution networks, there may be an appreciable reduction in transmission losses.
- The preceding cost-benefit calculations should not be considered as a basis for judging whether DSGs are or will be a financially attractive investment. They should be considered primarily as a way of indicating that the control and monitoring costs may in fact be a small part of much greater costs associated with the DSG and of potential benefits that may be achieved elsewhere in the utility system.

Section D7

CONCLUSIONS

The following conclusions have been drawn:

- Cost-benefit considerations are very important in the establishment of DSG technologies as a significant element in the generation of electric power at the level of the distribution network. As such, it is essential that standardized methods be established for performing cost-benefit calculations and evaluating the acceptability of any particular DSG technology application.
- Because there should be much in common between the evaluation methods used for the DSG technologies and those used for alternative generation means, each utility will be inclined to use its own methods. Nevertheless, there are certain generalized approaches that seem to lend themselves to simplified evaluation methods.

  One approach is the annual cost method that contributes to a determination of the cost per kwh for the assumed annual loading of the DSG on a daily, weekly, and monthly basis. Capital costs and operating and maintenance costs (including the cost of energy) are included and are based on the local conditions pertinent to the particular electric utility for a time period of 10 to 20 years.

  Another approach is built around the present worth concept and emphasizes the magnitude of the various capital equipment items, interest and inflation rates, operating and maintenance costs, and energy escalation rates, as well as other electric utility generator and customer loading changes.

  As a refinement of each of these methods of calculation, it may be essential to include the time of day and the time of year availability characteristics of the particular DSGs and loads. This would reflect more correctly the proper costs and benefits involved.

- Since there are many causes for uncertainty in the parameters and quantities that are used in these calculations, it is desirable that simpler, approximate methods for evaluation be used initially to identify those DSG technologies more likely to be used; their size, number, and location; and other factors so that the number of complete and detailed calculations can be held to a resonable value. There is little reason to determine precisely how poor an unacceptable solution is.
- A key factor in being able to perform cost-benefit evaluations is a knowledge of the costs and performance of the electric utility system consisting of generation, transmission, and distribution with and without varying

amounts of DSG for different times of day, week, and year. An alternative to the use of each DSG is to use none at all. As such, it is highly essential that the data showing the equivalent power generation rate prices as shown on Table D6.3-1 be available for developing comparable alternative cost figures.

- In addition to the uncertainties associated with the decisions that must be made initially in the selection of the most suitable DSG and the location and sizing of it, there are uncertainties in the daily scheduling and current operating decisions that may have some influence on the cost and benefits that may be realized in the actual operation of a DSG. In the cost-benefit considerations described above there has been little concern with such scheduling and current operating benefits. However, it appears likely that there are added benefits that are to be gained in these areas.

Appendix DI

OBSERVATIONS ON COST-BENEFIT ANALYSIS METHODS

In the final analysis each electric utility will evaluate the financial attractiveness of DSG alternatives by economic means related to the methods that they use to evaluate other economic questions. It is not the intent of this cost-benefit analysis to present an exhaustive economic study of various ways of performing such evaluations, but rather it is intended that the cost-benefit analysis provide a rough yardstick to help in the relative economic evaluation of alternative DSG technologies when used in different distribution networks for a number of different electric utilities.

Because relative costs and benefits can be either positive or negative, the term cost-benefit is considered positive when a favorable result is obtained (net benefits exceed net costs), and negative when an unfavorable result is produced (net costs exceed net benefits). Also, when referring to a benefit/cost ratio this ratio will be considered favorable when benefits/cost exceeds 1.0 and will be considered unfavorable when benefits/costs are less than 1.0.

Several different methods exist for analyzing costs and benefits, and it is often worthwhile before making a final economic decision to consider the results from more than one of these methods.

One way of analyzing cost-benefit emphasizes the comparison of the costs and benefits of producing electricity in an alternative way expressed in terms of dollars/kWh or in dollars per year for a given kW load to the customer, with the comparable costs and benefits of producing electricity using existing or presently planned methods. This approach emphasizes the economic impact of the cost of electricity on the customer and includes capital and operating cost and benefit elements with their associated annual values. Thus,

Cost-and-Benefit Comparison (Annual Cost)	=	(net cost and benefits for given amount of electricity to customer per year for alternative method)
	-	(net cost and benefits for a given amount of electricity to customer per year for existing method)

Another way of analyzing cost and benefits emphasizes the comparison of the present worth value of all the costs and benefits of the alternative method for delivering a given kW load to the customer over a defined time period (in years) with the present worth value of all the costs and benefits of the existing methods for delivering the same kW load to the customer as in the preceding

case. This approach highlights the costs to the utility to produce the desired electrical service and takes into account the capital and operating cost and benefit elements noting the time when they occur and the interest and inflation rates associated with them.

Thus,

Cost-and-Benefit Comparison (Present Worth) = (Present Worth of costs and benefits to utility over total time period involved for alternative DSG technology to produce comparable service to customer)

- (Present Worth of cost and benefits to utility over total time period involved for existing utility operation methods to produce comparable service to customer)

The two methods of cost-and-benefit comparison noted above can also be expressed as a benefit/cost ratio.

Thus,

$$\text{Cost-and-Benefit Comparison (Annual Cost)} = \frac{\text{(net cost and benefits for a given amount of electricity to customer per year for alternative method)}}{\text{(net cost and benefits for same given amount of electricity to customer per year for existing method)}}$$

and

$$\text{Cost-and-Benefit Comparison (Present Worth)} = \frac{\text{(Present Worth of costs and benefits to utility over total time period involved for alternative DSG technoloty to produce comparable service to customer)}}{\text{(Present Worth of costs and benefits to utility over total time period involved to existing utility operation methods to produce comparable service to customer)}}$$

When using the annual cost method, the contribution of capital cost to the cost of electricity is calculated by the following equation:

$$\text{Capital Cost} = \frac{\$}{kW} \times \frac{1000 \text{ mils}}{\$} \times \frac{0.20}{yr} \times \frac{1}{8760 \times F} \frac{yr}{hr} = \text{mils/kWh}$$

where $\frac{\$}{kW}$ = total dollars cost per kW of installed capacity.

The 0.20 figure is the annual capital fixed-charge rate that is applied to the total capital cost to obtain the annual charge for the capital cost. It may be different for different utilities; 0.20 is just a representative value. This 0.20 rate includes

- Interest return to bondholders
- Equity return to the stockholders
- Federal and state income taxes
- Depreciation (based on the useful life for all nonexpendable plant components)
- Local property taxes
- Insurance

The F factor is the capacity factor that ranges from 1 to 0 and expresses the per-unit portion of the time that the generating equipment can be considered to be available to generate the rated power.

Operating and maintenance costs are by their nature an annual cost, although over time they are affected by both inflation and interest rates.

When using the present worth method, the capital costs are determined for the time when they occur and are annualized by means of the annual capital fixed-charge rate over the life of the equipment. The annual costs for both capital equipment as well as the operating and maintenance charges (including fuel) are then discounted to take into account the inflation and interest rates over the equipment life.

In the calculations performed in the body of the report, the emphasis was on providing an "order of magnitude" estimate of the costs and benefits involved rather than an exact computation that would be required to evaluate each particular DSG technology.