NASA CR-165,279, Exec. Summ.

3 1176 00168 2286

NASA-CR-165279-EXEC-SUMM 19810012683

NASA CR-165279
BAC ER 14967

CONCEPTUAL DESIGN OF AN IN-SPACE CRYOGENIC FLUID MANAGEMENT FACILITY EXECUTIVE SUMMARY

by G. S. Willen, D. H. Riemer and D. C. Hustvedt

BEECH AIRCRAFT CORPORATION

prepared for

NATIONAL AERONAUTICS AND SPACE ADMINISTRATION

NASA Lewis Research Center

Contract NAS 3-22260

LIBRARY COPY

JUL 29 1981

LANGLEY RESEARCH CENTER
LIBRARY, NASA
HAMPTON, VIRGINIA

1. Report No.	2. Government Accession No.	3. Recipient's Catalog No.
CR 165279		

4. Title and Subtitle	5. Report Date
Cryogenic Fluid Management Facility - Executive Summary	April 1981
	6. Performing Organization Code
7. Author(s)	8. Performing Organization Report No.
G. S. Willen, D. H. Riemer, D. C. Hustvedt	BAC-ER-14967
9. Performing Organization Name and Address	10. Work Unit No.
Beech Aircraft Corporation P. O. Box 9631 Boulder, Colorado 80301	11. Contract or Grant No. NAS3-22260
12. Sponsoring Agency Name and Address	13. Type of Report and Period Covered
NASA Lewis Research Center Cleveland, Ohio 44135	Contractor Report
	14. Sponsoring Agency Code

15. Supplementary Notes

Project Manager E. P. Symons
NASA Lewis Research Center
Cleveland, Ohio 44135

16. Abstract

This study presents the conceptual design of a Spacelab experiment to develop the technology associated with low-gravity propellant management. The proposed facility consists of a supply tank, receiver tank, pressurization system, instrumentation and supporting hardware. A phased approach was assumed for the facility with Phase I concentrating on technology issues related to the supply tank and Phase II concentrating on technology issues related to the receiver tank.

The study consisted of three major tasks: Preliminary Facility Definition, Facility Conceptual Design and Facility Development Plan. The Preliminary Facility Definition identified the experimental objectives, the receiver tank to be modeled and constraints imposed on the design by the Space Shuttle, Spacelab and scaling requirements. The Conceptual Design includes the general configurations, flow schematics, insulation systems, instrumentation requirements and internal tank configurations for both phases. Analysis of the conceptual design included thermal, structural, fluid and safety/reliability aspects of the CFMF. Facility Development Plan includes schedule and cost estimates for the facility. A program Work Breakdown Structure and Master Program Schedule were prepared for a 7-year program costing $7.5M (in December 1980 dollars), excluding Shuttle user costs.

17. Key Words (Suggested by Author(s))	18. Distribution Statement
Propellant Transfer, Propellant Acquisition, POTV, Thermodynamic Vent, CFMF	Unclassified - Unlimited

19. Security Classif. (of this report)	20. Security Classif. (of this page)	21. No. of Pages	22. Price*
	Unclassified	31	

* For sale by the National Technical Information Service, Springfield, Virginia 22161

NASA-C-168 (Rev. 10-75)

FOREWORD

This Final Report summarizes the technical effort conducted by Beech Aircraft Corporation under Contract No. NAS 3-22260. The National Aeronautics and Space Administration, Lewis Research Center, administered the contract.

NASA-LeRC Program Manager	E. P. Symons
Beech Study Director	G. S. Willen
Lead Engineer	D. H. Riemer
Structural Analysis	A. D. Olsen
Design	D. L. Rohs
Instrumentation	P. L. DePerro
Safety and Reliability	J. R. Cowder
Liquid Acquisition/Ground Support Equipment	D. C. Hustvedt
Scaling Analysis	R. L. Oonk
Cost Analysis	S. S. Bates

In addition, Mr. M. H. Blatt of Science Applications, Inc., provided the receiver tank modeling analyses, including the discussions of the transfer processes and scaling analysis. Mr. Blatt provided design information for the helium diffuser, start basket and tapered vent tube.

All data is presented in the International Systems of Units as primary units with English units as the secondary system.

TABLE OF CONTENTS

Paragraph	Title	Page
	TITLE PAGE	i
	FOREWORD	iii
	TABLE OF CONTENTS	iv
	LIST OF FIGURES	v
	LIST OF TABLES	v
1.0	INTRODUCTION	1
1.1	Scope	1
1.2	Ground Rules	3
1.3	Study Results	3
2.0	PRELIMINARY FACILITY DEFINITION	4
2.1	Experimental Approach and Objectives	4
2.2	Receiver Tank to be Modeled	6
2.3	Facility Constraints	9
2.4	Receiver Tank Selections	10
2.5	Description of Transfer Processes	10
2.6	Scaling Analysis	11
3.0	FACILITY CONCEPTUAL DESIGN AND ANALYSIS	13
3.1	Facility Hardware Description	13
3.2	Conceptual Design Analysis	18
3.3	Facility Support Requirements	20
3.4	Mission Constraints	21
3.5	Experimental Test Plan	21
4.0	FACILITY DEVELOPMENT PLAN	25
4.1	Facility Development Schedule	25
4.2	Facility Costs	28
5.0	CONCLUSIONS AND RECOMMENDATIONS	30

LIST OF FIGURES

Figure	Title	Page
1-1	Cryogenic Fluid Management Facility	2
2-1	POTV Hydrogen Tank General Configuration	8
3-1	CFMF Phase I Spacelab Pallet	13
3-2	CFMF Phase II Pallet	14
3-3	Phase II, Mission Three, Receiver Tank Internal Configuration	15
3-4	General Start Basket Configuration	17
3-5	CFMF Integration Schedule	23
3-6	Phase I, Mission One, Timeline	23
3-7	Phase II, Mission Two, Timeline	24
3-8	Phase II, Mission Three, Timeline	24
4-1	Work Breakdown Structure	26
4-2	Master Program Schedule	27

LIST OF TABLES

Table	Title	Page
2-I	Phase I Facility Objectives	5
2-II	Phase II Facility Objectives	6
2-III	Cryogenic Fluid Transfer Operations Assessment (POTV)	7
2-IV	POTV Conditions - LH_2 Tank	8
2-V	Typical RCS Maximum Acceleration Levels	9
2-VI	Summary of CFMF Model Conditions	12
3-I	CFMF Weight Breakdown	19

1.0 INTRODUCTION

This report presents the work performed under NASA Contract NAS 3-22260 entitled, "Conceptual Design of an In-Space Cryogenic Fluid Management Facility." The purpose of this study is the development of a conceptual design for a Spacelab low-g facility which would demonstrate the technology required for cryogenic propellant management. The facility consists of a supply tank, receiver tank, pressurization system, instrumentation and supporting hardware (i.e., lines, valves and support structures) mounted on a single Spacelab pallet. Figure 1-1 shows the Cryogenic Fluid Management Facility (CFMF) mounted in the Space Shuttle payload bay. Three missions will be flown with different facility configurations. The supply tank will contain a liquid acquisition system; the third mission receiver tank will be equipped with a start basket. The facility is launched with the supply tank filled with liquid hydrogen (LH_2) and the receiver tank empty. In orbit, experiments will be conducted to evaluate liquid expulsion, mass gauging, liquid transfer, receiver tank cooldown and fill, and start basket performance.

The study is divided into three tasks:

1. Preparation of a preliminary facility definition.
2. Development of the conceptual design for the facility.
3. Preparation of a facility development plan.

These tasks contain the conceptual design of the In-Space CFMF, an analysis of the transfer processes, and structural and thermal analyses of the receiver tank. Instrumentation requirements, with regard to type and location, are included in this report. Ground support equipment, required to load the In-Space CFMF, is also discussed. General layout drawings and flow schematics were prepared for each phase of the facility. In addition, this report contains cost and schedule estimates for the development of the In-Space CFMF.

1.1 Scope. The scope of this study was to provide a conceptual design and development plan for a Spacelab facility which would demonstrate low-g transfer of cryogenic liquids. Based upon the conceptual design presented in this report, budgetary and planning (B&P) estimates for the facility were made. The design of the facility was to be suitable for a minimum of three missions with experimental objectives identified for each mission. The utilization of published low-gravity transfer analyses and techniques were emphasized.

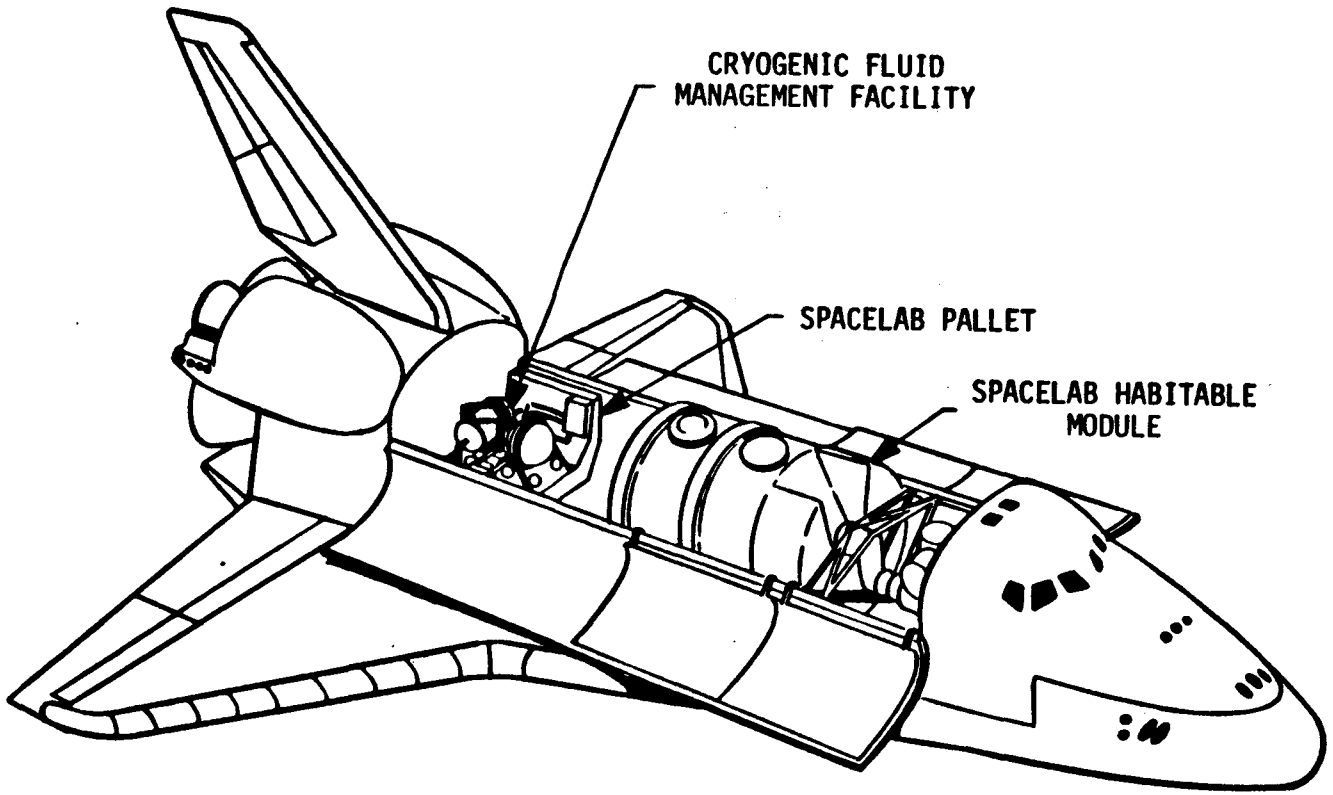

Figure 1-1 CRYOGENIC FLUID MANAGEMENT FACILITY

1.2 Ground Rules. The supply tank to be used in the CFMF is the LH_2 tank developed for the Cryogenic Fluid Management Experiment (CFME) Program. This tank is currently undergoing final design, and therefore, was not analyzed as part of this study. In addition, the design of the CFMF was to utilize as much hardware from the CFME Program as possible. CFME helium pressurization bottles and supply tank support system were to be used. The CFME Data Acquisition and Control System and data recorder were examined to determine their suitability for the entire facility.

The receiver tank selected for modeling was a Personnel Orbital Transfer Vehicle (POTV) liquid hydrogen tank. Selection of this tank resulted from a review of low-g liquid transfer literature which identified the POTV as the most likely near-term application of liquid cryogen transfer technology.

1.3 Study Results. The conceptual design of an In-Space Cryogenic Fluid Management Facility was defined. The hardware development items and the payload requirement unknowns for the CFMF were identified. This facility will be capable of demonstrating on-orbit cryogenic liquid transfer and the specific technologies associated with low gravity propellant management. The design, development, testing, fabrication and operation of the CFMF will require a span time of approximately seven years. The overall program cost will be $7.5M (in December 1980 dollars).

2.0 PRELIMINARY FACILITY DEFINITION

The preliminary facility definition was based upon demonstrating the technology required for low-g cryogenic propellant management. The experimental objectives of the facility were defined and a literature review was conducted to determine the receiver tank to be modeled. The geometric, thermal and structural constraints imposed on the facility by the Space Shuttle, the Spacelab pallet and the Cryogenic Facility Management Experiment (CFME) supply tank determined the extent to which the receiver tank could be modeled. Potential receiver tank models were selected based on these facility design constraints. Determination as to whether the data obtained from the experiment could be scaled to the full-scale Personnel Orbital Transfer Vehicle (POTV) tank required a scaling analysis of the transfer processes.

2.1 Experimental Approach and Objectives. A two-phase approach was utilized in the preliminary facility definition. This was to maximize the technical benefit to be gained and to provide a more cost effective hardware development program. The phased approach is the separation of the technologies associated with propellant transfer: (1) supply tank storage, liquid acquisition and transfer line chilldown; (2) receiver tank chilldown, fill and liquid acquisition.

Phase I. Phase I will consist of a single mission and will focus on the technologies associated with the supply tank liquid expulsion and transfer line and receiver tank cooldown. The performance characteristics of the supply tank will be determined. In particular, performance of the capillary device and Thermodynamic Vent System (TVS) will be assessed. The facility hardware for this phase will consist of the supply tank, the transfer line, a bare receiver tank (i.e., no internal hardware) and instrumentation required to provide tank quantity and tank outflow quality and density measurements.

Phase II. Phase II will consist of two missions and will deal primarily with the receiver tank technology associated with cooldown and fill. The first mission will utilize a bare receiver tank and will demonstrate a receiver tank no-vent fill following cooldown. The second mission will utilize a fully configured receiver tank (with a start basket). This mission will demonstrate the initial filling, liquid expulsion and refill capabilities of the start basket.

Experimental Objectives. The experimental objectives for each phase of the facility were determined to maximize the data obtained and provide an attractive technical benefit-to-cost ratio.

Experimental Objectives, Phase I. Table 2-I lists the primary and secondary objectives for Phase I. Several of the secondary objectives are concerned with the helium pressurization system and its impact on the supply tank (e.g., the effect of ambient helium on the capillary device retention capability and supply tank thermodynamics). Demonstration of low-g quality/density measurement is a critical objective of Phase I in that this instrumentation is required for the following two missions. Capillary device behavior during transient outflow is significant due to the need for pulsed outflow during receiver tank cooldown.

TABLE 2-I PHASE I FACILITY OBJECTIVES

Mission	Hardware	Primary	Secondary
1	Supply Tank, Transfer Line and Bare Receiver Tank	o Evaluate Performance of Supply Tank Channel Screen Liquid Acquisition Device for Cryogenic Liquid o Demonstrate On-Orbit Operation of Supply Tank Quantity Gauging System o Collect Transfer Line Cooldown Data o Evaluate Effectiveness of Receiver Tank Cooldown	o Demonstrate supply tank TVS. o Evaluate helium pressurization systems. o Demonstrate low-g liquid/vapor quality and mass flow measurement. o Examine effect of ambient helium pressurization on the supply tank screen retention capability. o Determine impact of ambient helium pressurization on the supply tank thermodynamics. o Verify analytical model of receiver tank chilldown. o Determine capillary device pressure characteristics for transient flow.

Experimental Objectives, Phase II. The primary and secondary objectives for each mission of Phase II are given in Table 2-II. The primary objectives are demonstration of receiver tank filling, operation of an internal TVS and start basket fill/refill capabilities. These

objectives were determined based on the assumption that all Phase I objectives were satisfactorily met. Mission Two will demonstrate the cooldown and no-vent fill of the bare receiver tank. The primary objectives of Mission Three are the demonstration of a no-vent liquid fill of a fully configured receiver tank, and filling, liquid expulsion and refilling of a start basket.

TABLE 2-II PHASE II FACILITY OBJECTIVES

Mission	Hardware	Primary	Secondary
2	Supply Tank, Transfer Line and Bare Receiver Tank	o Demonstrate No-Vent Liquid Fill o Demonstrate Receiver Tank Refill o Evaluate Receiver Tank Internal TVS	o Obtain data for receiver tank during prechill, chill and fill. o Verify scaling analysis. o Demonstrate helium vent using vent device and/or propellant settling.
3	Supply Tank, Transfer Line and Fully Configured Receiver Tank	o Demonstrate No-Vent Liquid Fill of Fully Configured Receiver Tank o Demonstrate Start Basket Fill and Refill	o Evaluate start basket performance during coast. o Investigate techniques for reducing vapor bubble collapse times. o Obtain data for receiver tank during prechill, chill and fill. o Evaluate impact of additional wetted tank mass on prechill. o Test TVSs for receiver tank.

2.2 Receiver Tank to be Modeled. After the objectives for both phases of the facility were determined, the tank to be modeled was selected. A literature review was conducted to determine the most likely candidate for on-orbit propellant transfer and its configuration and operating modes.

Data on typical vehicles requiring propellant transfer and propellant depots were tabulated for both cryogenic and noncryogenic fluids. Review of these reports indicated that the POTV is a promising candidate vehicle for future space based systems in the near term.

The cryogenic fluids used on the POTV are liquid hydrogen (LH_2) and liquid oxygen (LO_2). The LH_2 tank was selected for modeling for the following reasons:

1. Receiver tank chilldown and fill is more difficult to accomplish with LH_2 than with LO_2 (Reference Table 2-III).
2. Because of its lower surface tension, low-g liquid acquisition is more difficult.
3. There are fewer safety problems associated with LH_2 than LO_2.

TABLE 2-III CRYOGENIC FLUID TRANSFER OPERATIONS ASSESSMENT (POTV)

Process	LH_2 Tank	LO_2 Tank
Line Chilldown	Care must be taken to avoid pressure surges.	Care must be taken to avoid pressure surges. Pressure surges are aggravated by high liquid density.
Tank Chilldown	Prechill charge and vent recommended for chilldown to eliminate problems of venting liquid during chilldown.	Tank pressure will not exceed vent pressure during chilldown. Prechill charge and vent is therefore not required.
Tank Filling	Good mixing, using spray nozzles, jets or mixers is required to maintain thermal equilibrium and low tank pressures during fill (higher mixer power is required for LH_2 than for LO_2 to achieve a given bubble diameter according to Reference 1).	Good mixing, using spray nozzles or mixer is required to maintain thermal equilibrium and low tank pressures during fill.
Tank Refilling (With GHe Pressurant)	Removal of helium is required to prevent tank overpressure during refilling. Means of venting helium must be provided.	Removal of helium is required to prevent tank overpressure during refilling. Means of venting helium must be provided.
Vapor Removal From the Acquisition Device	Inflow of liquid in the start basket during fill should accomplish bubble collapse. Use of helium to condense vapor trapped in the acquisition device during filling is a secondary approach. Bubble collapse is more difficult than with LO_2 (e.g., approximately an order of magnitude more time is required for the same bubble size and level of subcooling).	Use helium to condense vapor trapped in the acquisition device during fill.

The general configuration of the POTV liquid hydrogen tank is shown in Figure 2-1. The liquid hydrogen tank is a 2219 aluminum cylindrical tank with elliptical heads, has a volume of 116.1 m^3 (4100 ft^3), weighs approximately 453 kg (998 lbs) and has a total tank surface area of 128.6 m^2 (1386 ft^2). The tank insulation system consists of 20 layers of double aluminized Superfloc. The tank contains a vapor only TVS, pressurization diffuser, propellant acquisition device and a fill manifold utilizing two spray nozzles. A summary of the POTV liquid hydrogen tank characteristics is contained in Table 2-IV.

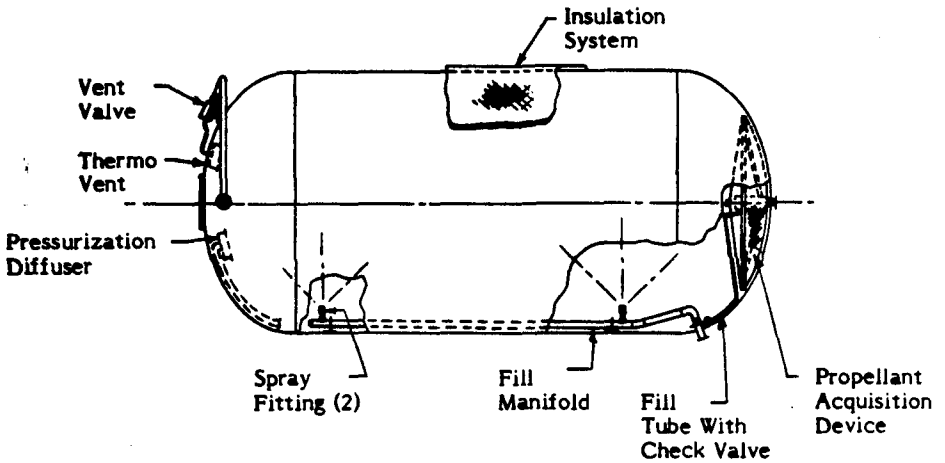

Figure 2-1 POTV HYDROGEN TANK GENERAL CONFIGURATION

TABLE 2-IV POTV CONDITIONS - LH_2 TANK

Item		Value	
o Tank Configuration:			
Geometry		Cylindrical With 1.38 Elliptical Heads	
Volume		116 m^3	(4100 ft^3)
Diameter		4.2 m	(166 in)
Cylindrical Length		6.2 m	(246 in)
Total Length		9.3 m	(366 in)
Surface Area		128.8 m^2	(1386 ft^2)
Thickness		1.27 mm	(0.05 in)
Material		2219 T87 Aluminum	
o Tank Weights:			
Dry Tank (2219 T87 Al)		453 Kg	(998 lbm)
Acquisition System		112 Kg	(247 lbm)
Wetted Mass		706 Kg	(1555 lbm)
Insulation		203 Kg	(448 lbm)
Total Tank System		942 Kg	(2074 lbm)
Loaded Fluid (LH_2)		7582 Kg	(16,700 lbm)
o Thermal/Fluid Parameters:			
Initial Temperature		289°K	(520°R)
Inlet Fluid (LH_2)		103 KPa	(15 psia saturated)
Prechill:	Fluid Velocity	3.4 m/sec	(11 ft/sec)
	Mass Flow Rate	0.45 Kg/sec	(1 lb/sec)
	Time	15 to 20 min	
Fill:	Fluid Velocity	6.7 m/sec	(22 ft/sec)
	Mass Flow Rate	0.91 Kg/sec	(2 lb/sec)
	Time	138 min	
Prechill Temperature		126°K	(226°R)
Maximum Tank Pressure		172 KPa	(25 psia)
Insulation System		20 Layers MLI	
Thermodynmaic Vent System Flow Rate		4.5 to 9.1 Kg/hr	(10 to 20 lb/hr)
Prechill Charge Terminated at		9.1 Kg	(20 lb)
Prechill Vent Initiated at $T_w - T_u$		5.6°K	(10°R)

2.3 Facility Constraints. The facility constraints are a major factor in the design of the CFMF and determine the extent to which the POTV LH_2 tank can be modeled. The external constraints on the facility are: (1) Spacelab/Shuttle constraints, (2) CFME supply tank constraints.

Shuttle/Spacelab Imposed Constraints. The design constraints imposed on the facility by the Space Shuttle and Spacelab pallet consisted of:

- Reactant Control System (RCS) limitations
- Coast acceleration
- Shuttle/Spacelab payload requirements

The RCS primary thrusters will be used throughout Phase II of the experiment for propellant settling. A typical RCS propellant utilization breakdown for a 14,500 Kg (32,000 lb) payload indicates that approximately 1811 Kg (3993 lb) of RCS propellant is available for payload support.

The acceleration level generated by the RCS engines is of particular importance during Phase II because of its effect on the design and operation of the start basket. Table 2-V gives the acceleration levels for the primary and vernier RCS thrusters. Based on the maximum acceleration in the -Y direction and typical RCS propellant usage, an RCS propellant consumption rate of 14.61 Kg/sec (32.14 lb/sec) was calculated.

TABLE 2-V TYPICAL RCS MAXIMUM ACCELERATION LEVELS

Direction	Translational Acceleration, mps^2 (ft/sec^2)				
RCS System	+X	-X	±Y	+Z	-Z
Primary Thruster	0.18 (0.6)	0.16 (0.5)	0.22 (0.7)	0.40 (1.3)	0.34 (1.1)
Vernier Thruster	0 (0)	0 (0)	0.0021 (0.007)	0 (0)	0.0024 (0.008)

The acceleration levels experienced by the Space Shuttle during coast for three different Shuttle orientations range from 3.8×10^{-7} g's to 3.0×10^{-6} g's for a 259 km (140 nautical mile) orbit.

The Spacelab pallet constraints are physical geometry, payload envelope and hardpoint locations. Pallet hardpoints are those points on the Spacelab pallet to which the facility hardware can be attached. In addition to the Shuttle/Spacelab imposed constraints, the facility has to meet center of gravity, structural factors of safety, vibration loading and thermal requirements.

CFME Supply Tank Constraints. The statement of work for this study directed that the supply tank was to be the CFME tank being developed under NASA Contract No. NAS 3-21591. The supply tank is a 0.60 m^3 (21.19 ft^3) spherical tank containing approximately 34.24 Kg (75.50 lb) of liquid hydrogen available for the facility receiver tank. The maximum supply tank outflow rate is 22.7 g/sec (0.05 lb/sec) at a pressure not to exceed 414 kPa (60 psia). In addition to the liquid quantity and maximum outflow rate constraints, the supply tank pallet mounting system was to be used.

2.4 Receiver Tank Selections. The selection of receiver tanks to be used in the CFMF was based on experimental objectives, tankage configuration to be modeled and facility constraints. The selected configuration consisted of one 0.36 scale receiver tank for Phase I and one 0.165 scale receiver tank for Phase II. The 0.36 tank is the largest receiver tank which will fit on a single Spacelab pallet; the 0.165 tank is the largest reveiver tank which can be filled. This concept utilizes one CFME supply tank for both receiver tanks. The advantage of this configuration is the use of a larger receiver tank for prechill, thus providing scaling data superior to the 0.165 scale tank.

2.5 Description of Transfer Processes. The objective of the experiment is to demonstrate the transfer of liquid propellant from a supply tank to a receiver tank. The approach described in the following paragraphs is consistent with the multiphase effort to be employed in the CFMF flights.

Supply Tank Pressurization. The baseline pressurization approach for the CFME supply tank is the use of helium supplied at ambient temperature. This approach will be satisfactory providing that heat transfer between the warm helium and cold liquid or capillary device is minimized.

Transfer Line Cooldown. The selected approach to transfer line cooldown for the CFMF is to flow the liquid through the transfer line, at low levels of subcooling, by slowly opening the supply tank outlet valve. If, during ground testing, pressure surges present a

problem during transfer line cooldown, a possible solution would be to pre-cool the line utilizing the supply tank TVS flow.

Receiver Tank Fill. The approach proposed for accomplishing a no-vent receiver tank fill involves three phases: (1) prechill, (2) chill and (3) fill. This approach is designed to eliminate the need for venting while a two-phase mixture exists in the tank. The receiver tank prechill process, beginning with the tank wall at some initial warm temperature, consists of a liquid charge, hold and vapor vent. The charge, hold and vent cycle is designed to prevent liquid from being vented overboard. Prechill continues until a predetermined tank wall temperature is reached. Prechilling the tank to this temperature permits chill and fill of the receiver tank without further venting. Tank chill proceeds from the prechill target temperature to the saturation temperature of the fluid in the tank, whereupon the tank is filled. Tank chill and fill are both accomplished with the vent closed.

Start Basket Vapor Collapse. Filling of the start basket will be accomplished by flowing a portion of the subcooled inlet fluid through the start basket outlet (i.e., back filling). An analysis indicated that an inlet flow equivalent to four jets would be sufficient to condense any trapped vapor during filling the Phase II receiver tank.

Venting. It must be demonstrated that helium can be removed from a partially filled LO_2 or LH_2 POTV tank. This is required to prevent overpressurization of the tank during refill. Two approaches to helium venting were considered: The first approach (active) utilizes the primary RCS thrusters to settle the liquid in the receiver tank during which time venting occurs; the second approach (passive) will use a tapered vent tube to separate the liquid and vapor phases.

Receiver Tank Pressurization. Receiver tank pressurization will be accomplished using ambient helium injected into the tank.

2.6 Scaling Analysis. An analysis was conducted to determine if the data obtained from the Phase I and Phase II receiver tanks could be scaled to the prototype tank (POTV). Scaling parameters (P*, V* and M* representing the ratio of model to prototype pressure, volume and wetted mass) were plotted as a function of tank scale. These plots illustrated that exact P*V*/M* or V*/M* scaling was not possible. Since

exact scaling was not possible, the experiment was designed to maintain similar flow and heat transfer regimes between model and prototype so that the same analytical expressions will apply to both the prototype and the model (i.e., similarity scaling).

For modeling based on maintaining similar flow and heat transfer regimes, the following limits were found for the receiver tank inlet manifold jet velocity (V_m) and orifice diameter (d_m) of the jet:

Yuen and Chen, evaporating drops: $8.71 \times 10^{-4} < V_m d_m < 8.71 \times 10^{-3}$ m^2/sec

McGinnis, boiling drops: $V_m^2 d_m < 2.0$ m^3/sec^2

Selecting $d_m = d_p = 3.17$ mm (0.0104 ft) and a velocity of 2.29 m/sec (7.5 ft/sec) satisfies the regime constraints for both high and low Bond number mixing. The POTV will experience low Bond number mixing during high Earth orbit coasts and high Bond number mixing during propulsive maneuvers and the low Earth orbits.

Based on these requirements, inflow conditions were selected for the model so that the same flow and heat transfer regimes will be maintained in the model as in the prototype. The scaled receiver tank conditions are summarized in Table 2-VI.

TABLE 2-VI SUMMARY OF CFMF MODEL CONDITIONS

Item	Model Receiver Tank	
	0.36 Scale	0.165 Scale
o Tank Configuration:		
Geometry	Cylindrical - 1.38 Elliptical Heads	Cylindrical - 1.38 Elliptical Heads
Volume	5.42 m^3 (191.3 ft^3)	0.52 m^3 (18.42 ft^3)
Diameter	1.52 m (4.98 ft)	0.69 m (2.28 ft)
Cylindrical Length	2.25 m (7.38 ft)	1.03 m (3.38 ft)
Total Length	3.35 m (10.98 ft)	1.53 m (5.03 ft)
Surface Area	16.7 m^2 (179.6 ft^2)	3.5 m^2 (37.8 ft^2)
Thickness	0.97 mm (0.038 in)	0.635 m (0.025 in)
Material	6061 Aluminum	6061 Aluminum
o Tank Weight:		
Dry Tank	45.8 Kg (101 lb)	7.26 Kg (16 lb)
Fluid Load (LH_2)	N/A	33.0 Kg (72.74 lb)
o Thermal/Fluid Parameters:		
Initial Temperature	300°K (540°R)	300°K (540°R)
Inlet Fluid (LH_2)	103 KPa (15 psia) Saturated	103 KPa (15 psia) Saturated
Fluid Velocity	2.71 m/sec (8.9 ft/sec)	2.29 m/sec (7.5 ft/sec)
Mass Flow Rate	22.7 gm/sec (0.05 lb/sec)	22.7 gm/sec (0.05 lb/sec)
Prechill Temperature	114°K (205°R)	100°K (180°R)
Maximum Tank Pressure	241 KPa (35 psia)	241 KPa (35 psia)
Jet Diameter	15 Jets - 3.18 mm (0.125 in)	18 Jets - 3.18 mm (0.125 in)
Line and Tank Chilldown	2.9 Kg (6.4 lb)	0.95 Kg (2.1 lb)

3.0 FACILITY CONCEPTUAL DESIGN AND ANALYSIS

The conceptual design of the Cryogenic Fluid Management Facility (CFMF) includes a description of the receiver tanks, support structure, acquisition device, thermal and pressure control systems required for the supply and receiver tanks, all fluid fill, drain, vent and transfer lines, instrumentation, data acquisition and experiment control systems. Structural, thermal, fluid mechanic and safety/reliability analyses were conducted based on the conceptual design. In addition, Payload Specialist involvement and ground support equipment requirements are identified. An experimental test plan was developed for each mission, including ground test requirements, launch procedures and on-orbit operations.

3.1 Facility Hardware Description. The Phase I and Phase II facility general configurations are illustrated by Figures 3-1 and 3-2, respectively. The following paragraphs describe the major hardware components for both phases of the facility.

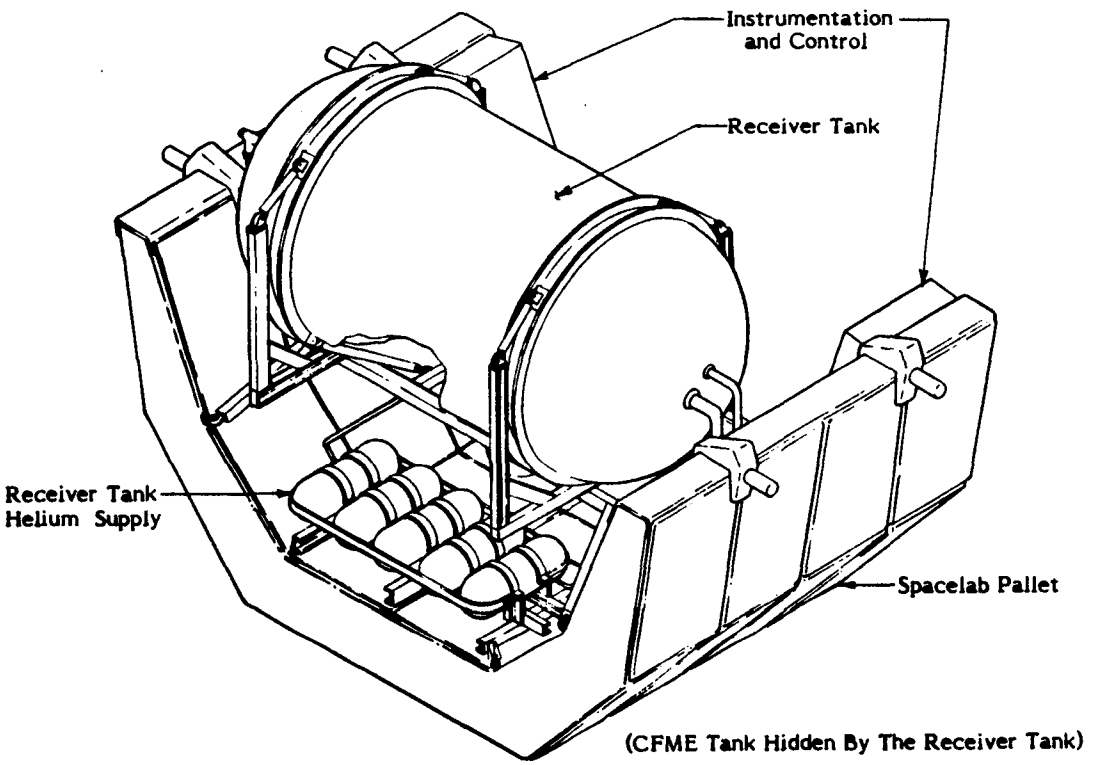

Figure 3-1 CFMF PHASE I SPACELAB PALLET

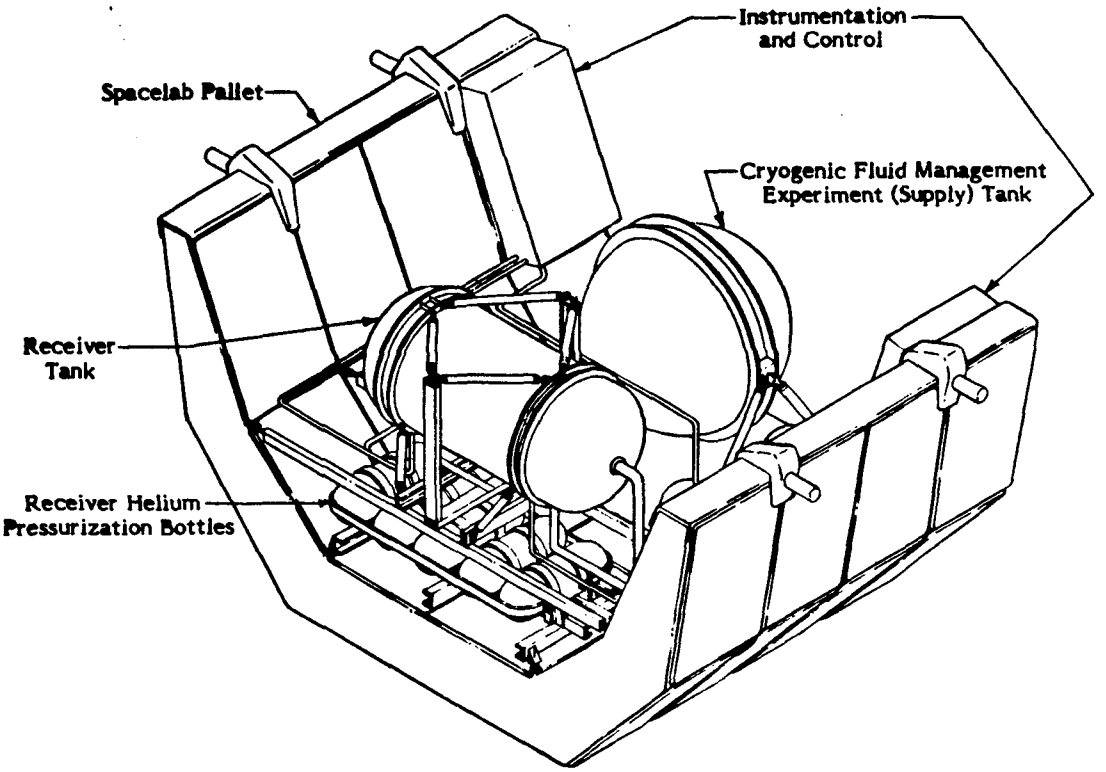

Figure 3-2 CFMF PHASE II PALLET

CFME Supply Tank. The CFME supply tank is a 0.60 m^3 (21.19 ft^3) spherical dewar. It has a TVS consisting of a vapor-cooled shield (VCS) and two heat exchangers. The primary heat exchanger operates in a steady state mode while the secondary heat exchanger operates in a transient mode.

Receiver Tanks. The Phase I receiver tank is to be a 0.36 scale POTV liquid hydrogen tank. It is a cylindrical tank having a total length of 3.35 m (10.98 ft), a diameter of 1.52 m (4.98 ft) and elliptical heads having a radius-to-height ratio of 1.38. The tank will be constructed of 6051-T6 aluminum and will contain an inlet manifold, a helium diffuser and, to facilitate data acquisition, an instrumentation tree.

The Phase II receiver tank will represent a 0.165 scale POTV liquid hydrogen tank. It will also be an elliptically headed cylindrical tank with a radius-to-height ratio of 1.38 and a total length and diameter of 1.53 m (5.03 ft) and 0.85 m (2.78 ft), respectively. Unlike

Phase I, the Phase II receiver tank will be used for two missions with different internal configurations for each mission. The Phase II, Mission Two, receiver tank will contain an inlet manifold, helium diffuser, instrumentation tree, tapered helium vent tube, vapor pullthrough suppression baffle and an internal Thermodynamic Vent System.

The Phase II, Mission Three receiver tank is the same as the Mission Two, except that it will contain a propellant acquisition device in place of the suppression baffle, and an external heat exchanger for the TVS. Figure 3-3 shows the internal configuration of the Phase II, Mission Three, receiver tank.

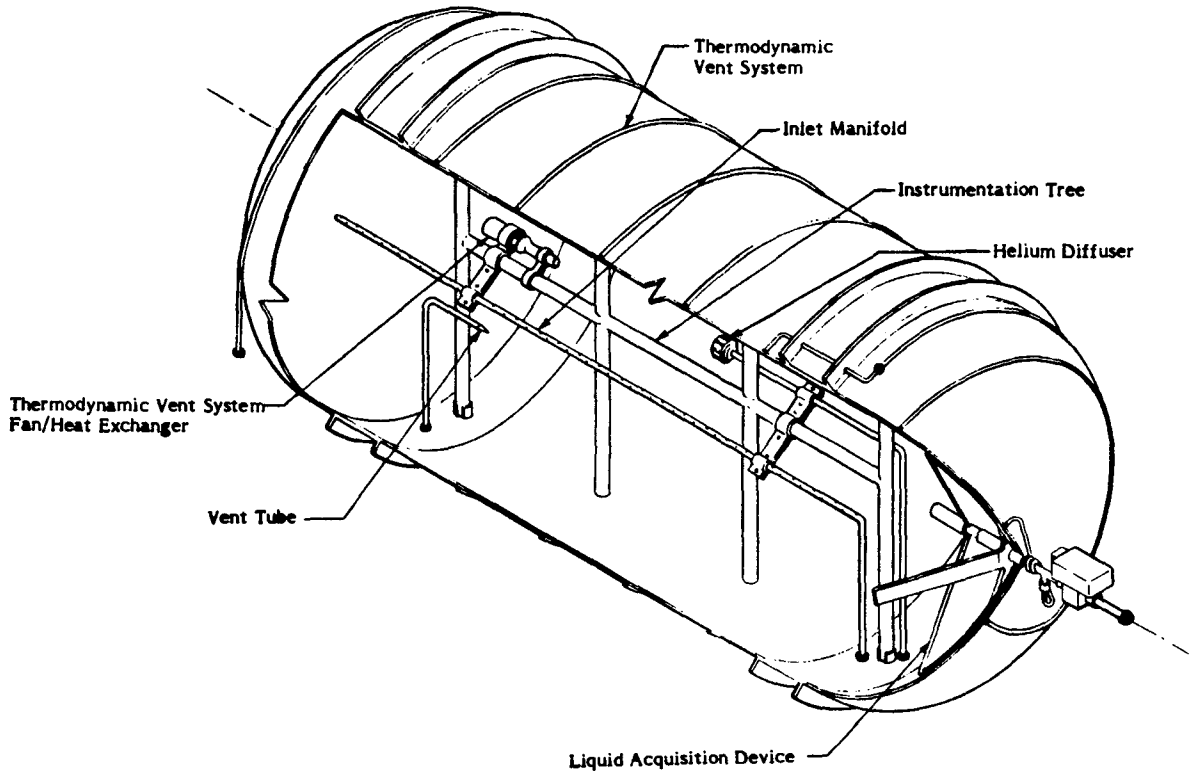

Figure 3-3 PHASE II, MISSION THREE, RECEIVER TANK INTERNAL CONFIGURATION

Inlet Manifold. The liquid inlet manifold's primary functions are to distribute liquid on the receiver tank wall and to assure mixing during receiver tank fill. Two possible techniques are available for accomplishing this: the use of spray nozzles and the use of a tube with

holes placed longitudinally along it. An analysis of the POTV spray nozzles to determine velocities at the nozzle exit and tank wall and the capability of the spray nozzles to satisfy fluid mixing requirements during fill of a POTV indicated that the spray nozzles may be inadequate. Therefore, the recommended approach for CFMF to assure sufficient mixing and heat transfer is the use of liquid jets provided by a tube with holes placed along its length.

Helium Diffuser. The purpose of the helium diffuser is to ensure that warm helium entering the receiver tank does not impinge directly on the capillary device or generate liquid spray.

Tapered Vent Tube. The function of the tapered vent tube is to shed liquid during venting, thereby allowing the venting of vapor only during low-g coast periods.

Liquid Acquisition Device. Liquid acquisition in the receiver tank during periods of low-g operation is accomplished by means of a start basket. The start basket is a screen device designed to trap liquid over the tank outlet during periods of low gravity. This trapped liquid serves as a vapor-free reservoir for boost pump and engine startup until the bulk of the liquid in the tank is settled and can be withdrawn from the tank outlet. The settled liquid refills the start basket for the next startup. A typical start basket configuration is illustrated by Figure 3-4.

There are a number of important considerations which determine the design of the start basket:

1. The quantity of liquid trapped in the start basket must be sufficient to provide outflow from the tank during settling and allow for evaporative losses from the screens during periods of low-gravity operation.

2. Liquid leaving the tank must be vapor free. This is usually accomplished by means of screened channels inside the start basket. These channels are designed so that they are in contact with liquid under all operating conditions. The wetted channel screens prevent vapor from entering the outlet.

3. The screens forming the surface of the start basket must be sized to retain liquid at all expected acceleration levels.

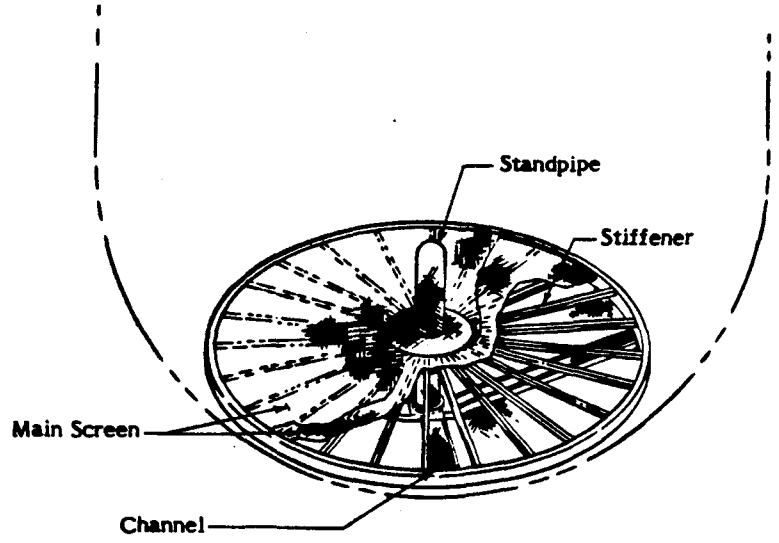

Figure 3-4 GENERAL START BASKET CONFIGURATION

4. The screen geometry of the start basket must provide rapid wicking of liquid along the screen to replace evaporative losses and prevent screen dry-out during low-gravity operation.

5. The overall geometry of the start basket must be designed to permit rapid refilling at expected tank liquid levels.

Vapor Pullthrough Suppression. The Phase II, Mission Two, receiver tank may contain a vapor pullthrough suppression baffle to prevent the ingestion of vapor into the outflow line during receiver tank depletion. The receiver tank will be drained by utilizing the RCS primary thrusters to settle the liquid in the tank. Without the baffle, vapor ingestion may occur for the low-g levels generated by the RCS primary thrusters resulting in excessive liquid residuals.

Helium Pressurization Bottles. As part of the ground rules for this study, the four helium pressurization bottles selected for the CFME supply tank were to be used. These tanks are titanium 0.35 meter (13.9 inch) diameter spheres and are rated at 22.1 MPa (3200 psia) working pressure.

The receiver tank helium pressurization and inerting will come from an independent source. The helium supply for the receiver tank consists of five Kevlar-wound aluminum lined cylindrical high-pressure bottles. They have a volume of 26.7 liters (1631 in^3) each and a maximum design pressure of 21 MPa (3000 psi). The bottles are mounted to a subpallet to facilitate handling and assembly during Spacelab pallet integration. These bottles are currently undergoing Shuttle qualification for the Manned Maneuvering Unit (MMU).

Data Acquisition and Control and Data Recording. The experiment data and control system employs a microprocessor-based, on-board Data Acquisition and Control System (DACS) to provide experimental control while collecting and recording the data. All electrical instrumentation and control equipment will be connected to the DACS.

Instrumentation. Instrumentation requirements to determine that the facility is functioning properly, to control the experiment and to collect data on the facility performance were identified. These requirements are: (1) temperature measurements, (2) pressure measurement, (3) liquid vapor sensing, (4) quality measurement and (5) mass gauging.

3.2 Conceptual Design Analysis. The analyses conducted in support of the CFMF conceptual design consisted of: structural, weight and center of gravity (CG), thermal, fluid mechanic, and safety and reliability.

CFMF Structural Analysis. A structural analysis of the CFMF Phase I and Phase II Facility was conducted using the payload environments specified in the Space Shuttle Systems Payload Accommodations Handbook. An ultimate factor of safety of 2.5 against limit load conditions was used throughout the analysis.

Weight and Center of Gravity Envelope. The weight breakdown and the location of the center of gravity relative to the Spacelab pallet, including the CFME and Spacelab pallet for the Phase I and Phase II facility was calculated. The total facility weight, including the Spacelab pallet weight is given in Table 3-I.

TABLE 3-I CFMF WEIGHT BREAKDOWN

Component	Phase I Kg	Phase I (lb)	Phase II Kg	Phase II (lb)
Receiver Tank (Including Girth Rings)	50	(110)	7	(16)
Receiver Tank Support Frame	22	(49)	28	(61)
Internal Hardware	5	(10)	9	(20)
Top Support Struts	4	(8)	4.1	(9)
Bottom Support Struts	4	(8)	4	(8)
Helium Pressurant Bottles	68	(150)	68	(150)
Helium Bottle Support Frame	16	(36)	16	(36)
Lines	4	(8)	6	(13)
Instrumentation	25	(55)	35	(76)
Valves	34	(74)	38	(84)
Insulation	4	(8)	0.9	(2)
Miscellaneous (Heat Exchangers, Filters, Orifices)	11	(25)	11	(25)
CFMF	246	(541)	227	(500)
CFME	487	(1075)	487	(1075)
Spacelab Pallet	1091	(2400)	1091	(2400)
TOTAL	1824	(4016)	1805	(3975)

Thermal Analysis. The thermal analysis of the heat leak into the receiver tank and transfer line was calculated at a worst-case cold condition of 20°K (36°R) and a time averaged external temperature of 308°K (555°R), representing the thermal environment during Shuttle thermal cycling.

Transfer Line Pressure Drop. To ensure that liquid enters the receiver tank, the minimum required LH_2 transfer pressure was calculated. This transfer pressure includes the frictional pressure drop through the line and components, and the pressure drop (i.e., level of subcooling) required to prevent two-phase flow formation from transfer line heat leak. Calculations based on the transfer line heat leak of 9.3 w (31.7 Btu/hr) indicated that, for the subcooled liquid, a temperature rise of 0.04°K (0.1°R) would result. This small change in temperature will not significantly increase the transfer pressure required.

Safety and Reliability Analyses. An analysis of each phase of the CFMF identifying inherent hazards and system limitations was conducted. These analyses complied with the NASA payload safety requirements. The conclusions from this analysis show that no single point failure of this system will cause an unsafe condition on the launch pad or in orbit; however, several single point failures will terminate the experiment.

3.3 Facility Support Requirements. The ground and on-orbit facility support requirements to service the CFMF and the Payload Specialist on-orbit support requirements were defined.

Ground Support Equipment (GSE). The GSE required to service the CFMF before launch includes a cryogenic hydrogen loading system to fill the supply tank, a gaseous helium loading system for charging facility helium bottles, and mechanical equipment for handling and lifting.

The Beech-built Fuel Cell Servicing System (FCSS) is currently used to load the Space Shuttle Power Reactant Storage Assembly (PRSA) tanks with supercritical hydrogen and oxygen. The FCSS can be used to fill the CFMF supply tank with LH_2 through the midbody umbilical; however, changes in the operating procedure will be required to fill the supply tank with low pressure (12 N/cm^2 (18 psia)) saturated liquid.

The gaseous helium bottles for the CFMF supply and receiver tanks will be charged in the Operations and Control (O&C) Building prior to pallet-to-Shuttle integration. This system includes all the required valves, flex lines and regulators necessary to fill the bottles (maximum pressure 2162 N/cm^2 (3135 psia) at 29°C (85°F)).

Fixtures for handling the supply tank prior to installation on the pallet will have been designed as part of the CFME design effort. Similar fixtures would be needed for the receiver tank and its associated hardware.

Payload Specialist. The Payload Specialist's involvement in monitoring the facility is to be minimized; however, some interaction is required. The interface between the facility and the mission Payload Specialist is through the Aft Flight Deck (AFD). He will be responsible for the requests made by the facility DACS for RCS thruster firing, as well as

honoring requests for low acceleration coast periods. In addition, the Payload Specialist will have the capability to monitor the facility's progress through its preprogrammed sequence. This capability is necessary to provide the Payload Specialist with any information required in the event an experiment abort is required.

3.4 Mission Constraints. The constraints imposed by the CFMF during its operating period on the Space Shuttle mission are divided into three major categories: (1) thermal constraints, (2) acceleration requirements and (3) mission scheduling.

Thermal. The maximum and minimum pallet surface temperatures are dependent on the mission profile. A maximum pallet surface temperature of 393°K (708°R) and a minimum temperature of 123°K (222°R) were used for analysis purposes.

Acceleration. The constraints imposed by acceleration requirements are based on the need for low acceleration coast and utilization of the RCS primary thrusters. The low acceleration coast will be required to simulate POTV operations. Assessment of the tapered vent tube and internal heat exchanger/fan operations during Phase II, Mission Two, and the thermodynamic vent system operation and start basket testing during Phase II, Mission Three, will require a low acceleration environment. The reactant control system primary thrusters will be utilized during venting and receiver tank draining. Cycles of RCS thruster firing and low acceleration coast periods will be required during start basket testing.

Mission Scheduling. The CFMF (Missions Two and Three) must not be flown with other experiments which require large quantities of RCS propellant, special accelerations, directional requirements or solar positioning.

3.5 Experimental Test Plan. To meet the mission objectives, an Experimental Test Plan for the CFMF was developed defining the ground test requirements, launch procedure and on-orbit sequence of operations for each of the three missions.

Ground Test Requirements. The ground test requirements consist of those test items to be performed at KSC following integration of the CFMF with the Spacelab pallet. These requirements assume that component and system checkout was accomplished prior to shipping.

The ground test requirements for the CFMF are:

1. Continuity check of all electrical circuits.
2. Verification of supply tank vacuum integrity.
3. Leak check with ambient temperature helium.
4. Check operation of fill valves with low pressure ambient helium.
5. Instrumentation checkout.
6. Recorder and DACS checkout - check manual on, off and abort capability.
7. Check Caution and Warning (C&W) signal generation.

Launch Procedure. The sequence of events from receipt of the CFMF hardware at KSC to launch is given by Figure 3-5. This schedule shows that approximately 12 working days are required to complete CFMF-to-pallet integration. Electrical Ground Support Equipment (EGSE) will be required to operate the CFMF up until launch. The supply tank TVS will operate by venting through the T-O umbilical until just prior to launch, then will be closed until orbit is achieved.

On-Orbit Operations. Typical timelines for Missions One, Two and Three were developed and are given in Figures 3-6, 3-7 and 3-8, respectively. These timelines are consistent with the experimental objectives for each mission. The first 24 hours of on-orbit operation are for orbit stabilization and housekeeping. The final 24 hours of the timeline is allocated for supply and receiver tank inerting.

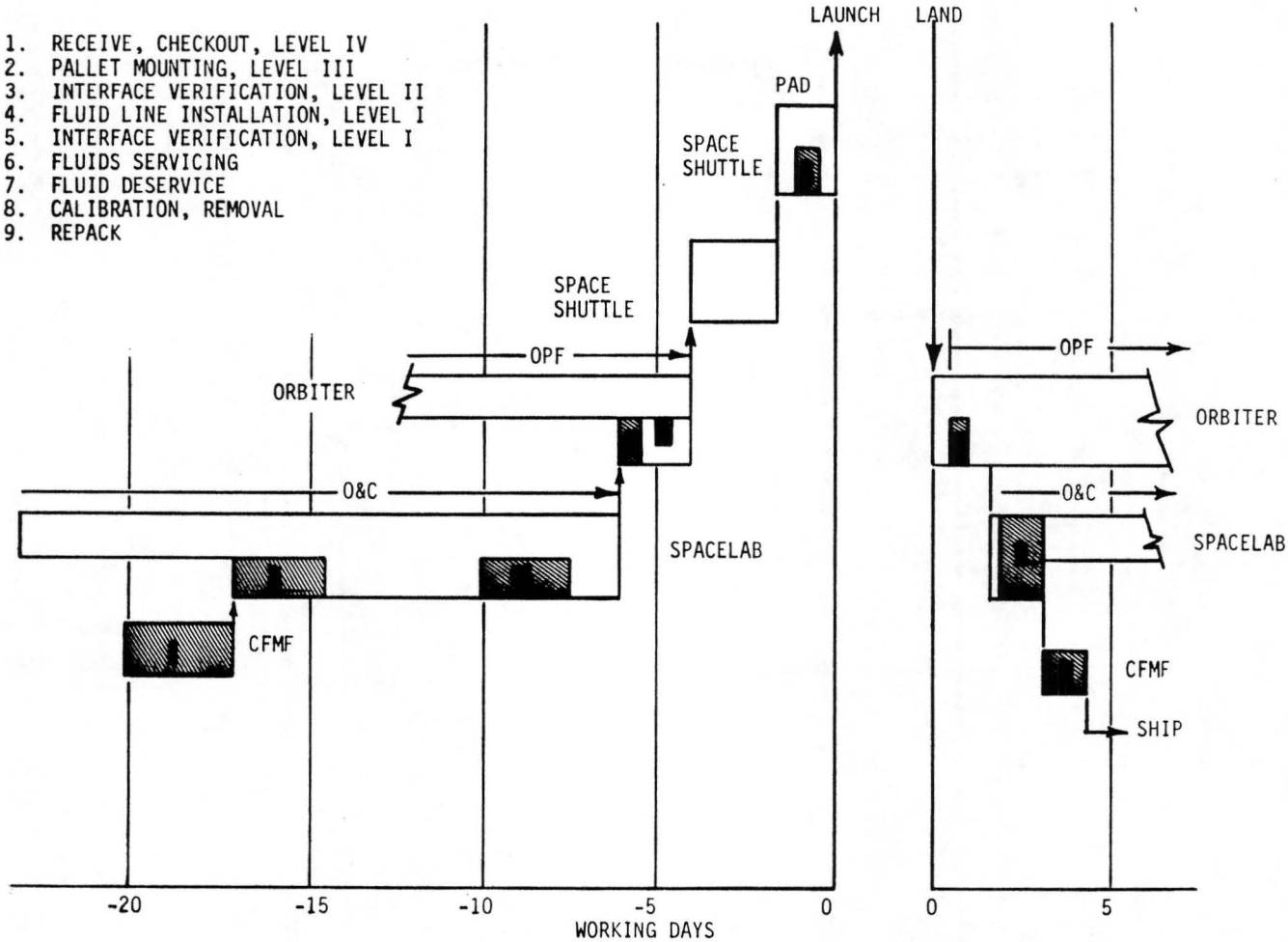

Figure 3-5 CFMF INTEGRATION SCHEDULE

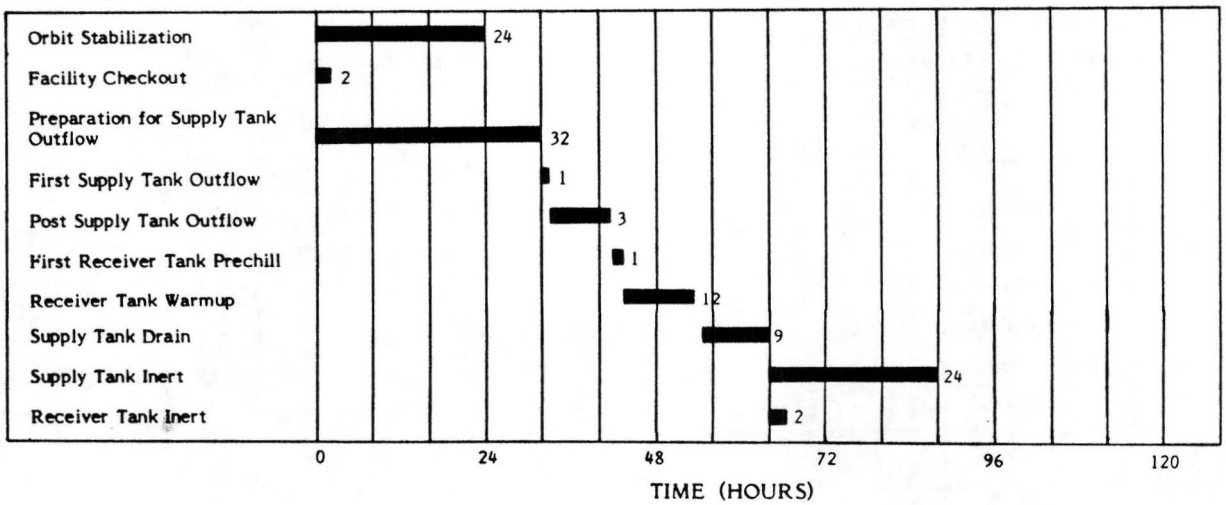

Figure 3-6 PHASE I, MISSION ONE, TIMELINE

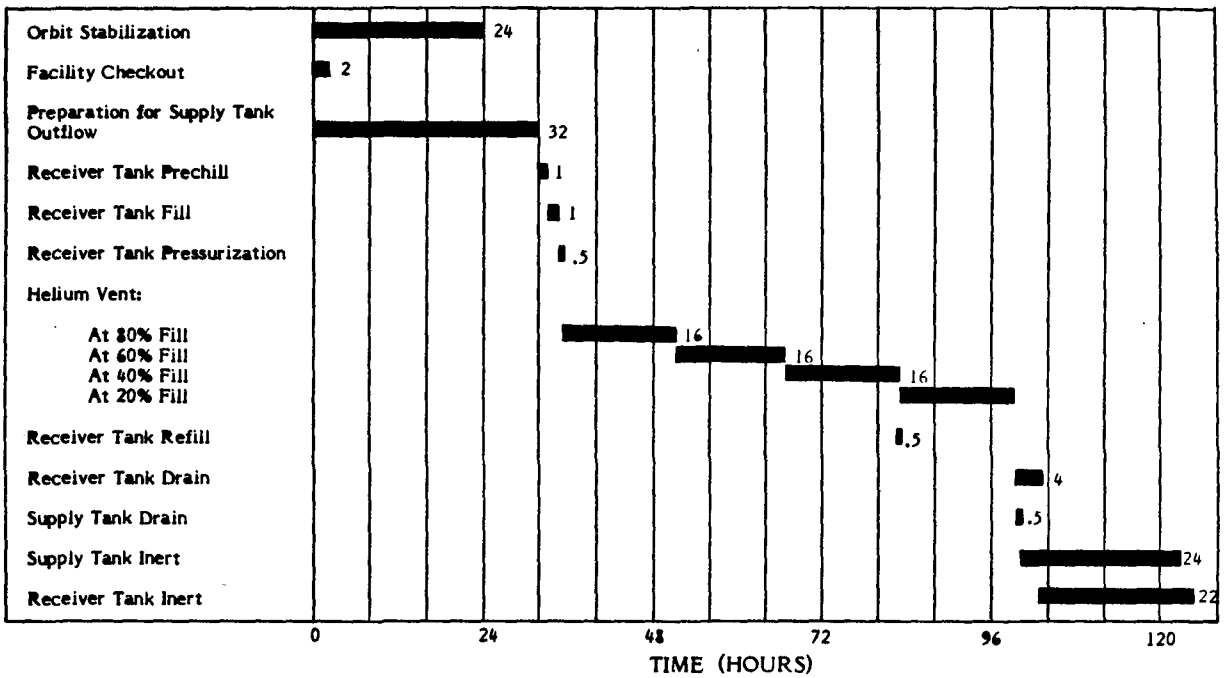

Figure 3-7 PHASE II, MISSION TWO, TIMELINE

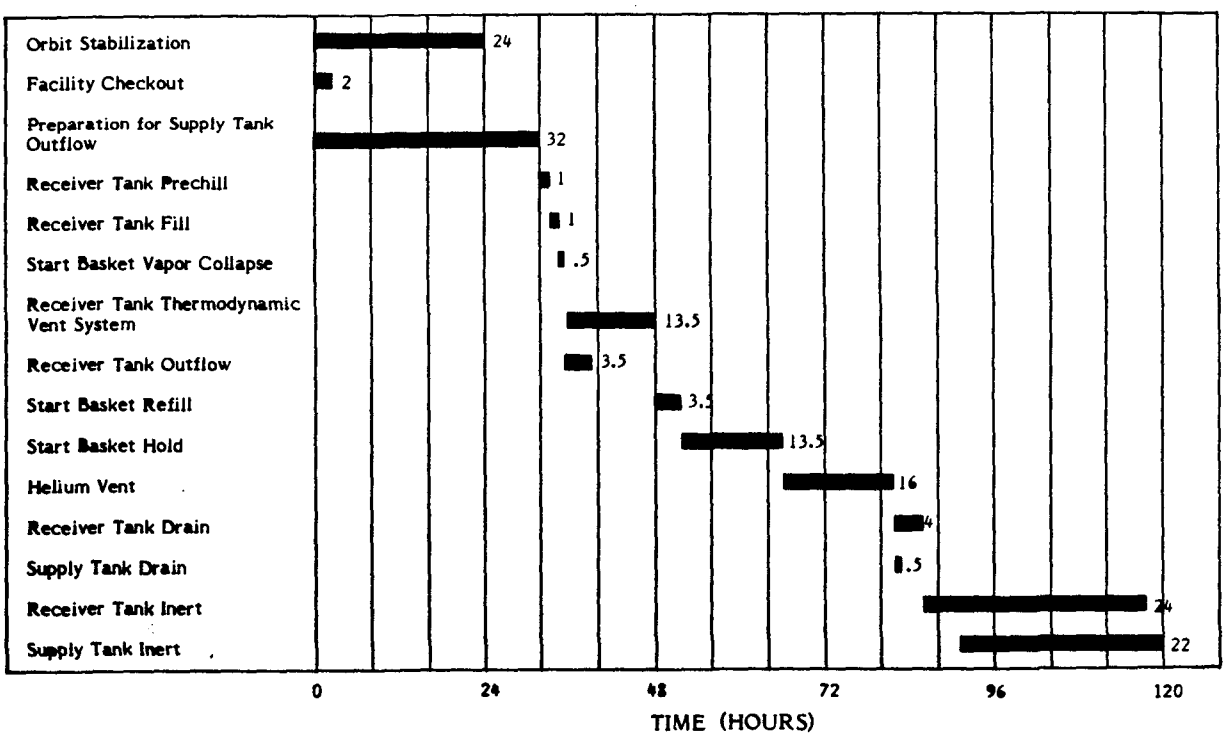

Figure 3-8 PHASE II, MISSION THREE, TIMELINE

4.0 FACILITY DEVELOPMENT PLAN

The facility development plan was generated to provide a guide for the cost effective development of the Cryogenic Fluid Management Facility (CFMF) and to identify long-lead, development or high-cost items. This plan consists of cost and schedule estimates for both phases of the facility and was based on the conceptual design. The approach taken in developing the plan consisted of preparation of a Work Breakdown Structure (WBS), a Master Program Schedule and a major component Bill of Material (BOM) from which facility costs were derived.

4.1 Facility Development Schedule. To prepare a schedule for the cost effective development of the CFMF, it was necessary to generate a WBS identifying the required tasks. From the WBS, a Master Program Schedule was prepared to provide estimates of the time and cost required to design, develop, fabricate, test and provide launch support of the CFMF. In the preparation of the Master Program Schedule, the long lead and development items were identified.

Work Breakdown Structure. The WBS shown in Figure 4-1 provides a graphical definition and display of the work tasks to be accomplished. The upper level represents the 17 major tasks identified for the CFMF Program.

Master Program Schedule. The Master Program Schedule shown in Figure 4-2 was derived from the WBS of Figure 4-1. The key program milestones were identified and the schedule was prepared to meet these milestones. The schedule was then reviewed and modified where necessary to provide a realistic development schedule.

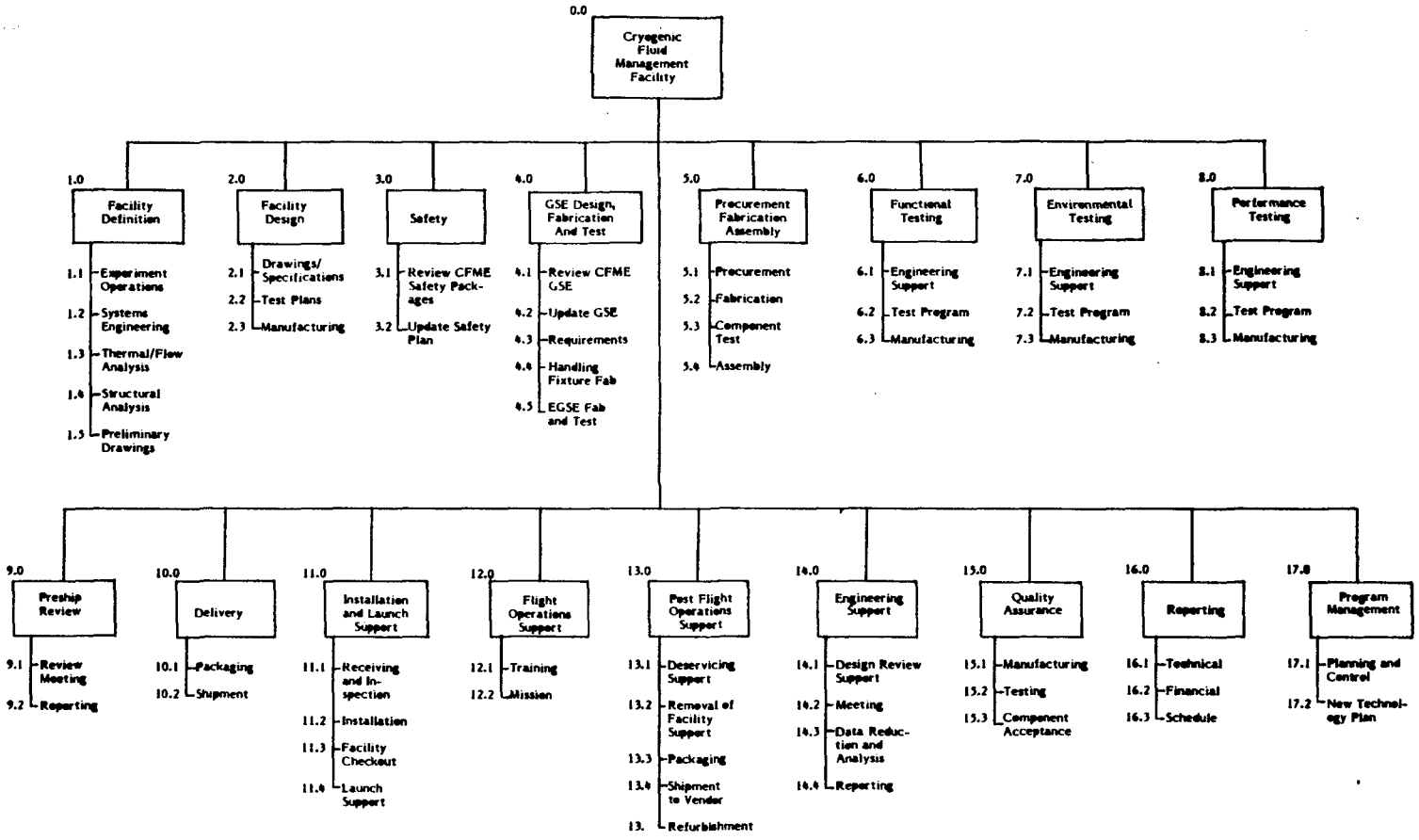

Figure 4-1 WORK BREAKDOWN STRUCTURE

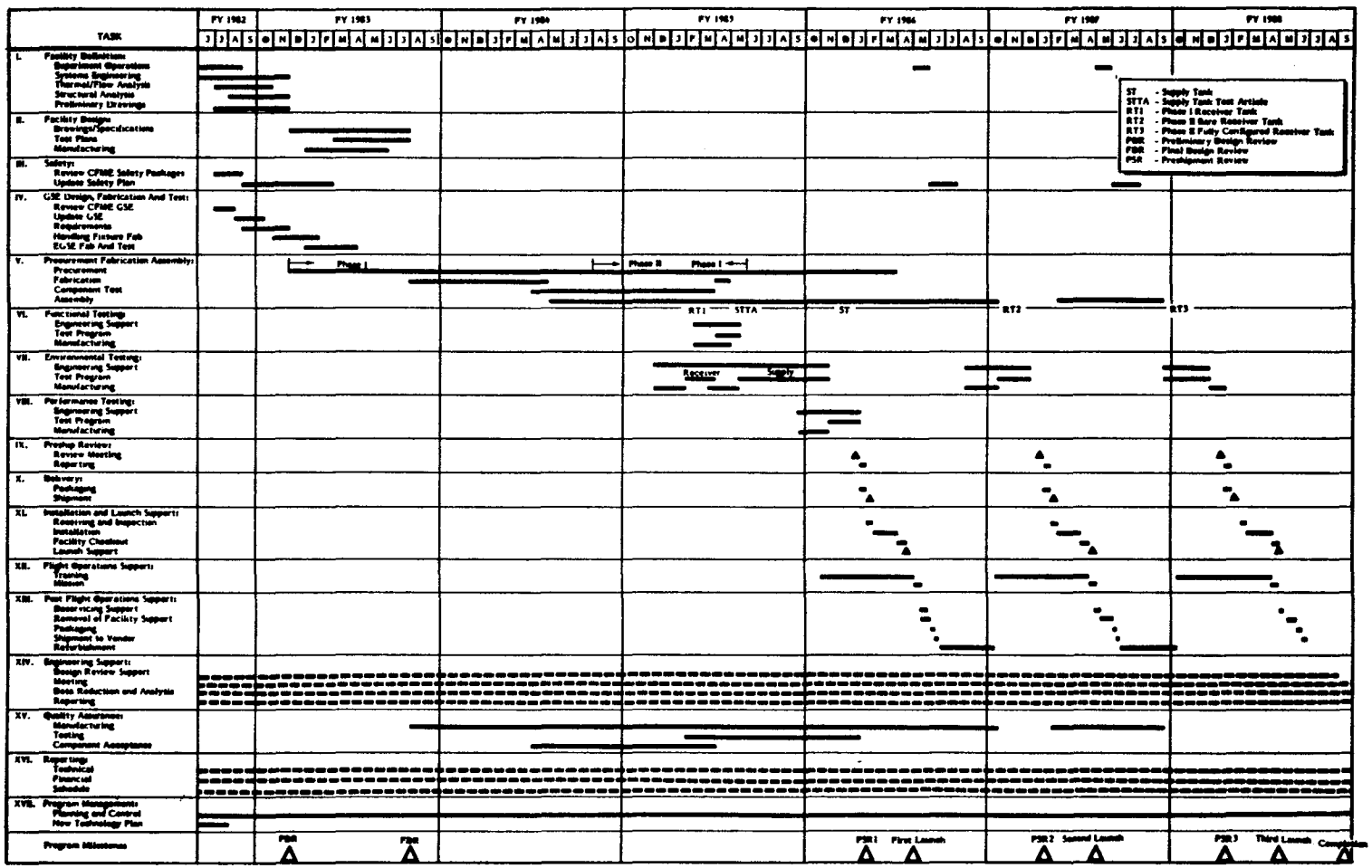

Figure 4-2 MASTER PROGRAM SCHEDULE

The Master Program Schedule identifies eight key program milestones:

1. PDR - Preliminary Design Review.
2. FDR - Final Design Review.
3. PSR1 - Phase I Preshipment Review.
4. SSL1 - Space Shuttle Launch, Phase I.
5. PSR2 - Phase II (First Mission) Preshipment Review.
6. SSL2 - Space Shuttle Launch, Phase II (First Mission).
7. PSR3 - Phase II (Second Mission) Preshipment Review.
8. SSL3 - Space Shuttle Launch, Phase II (Second Mission).

Long-Lead Procurement Items. Long-lead items were identified as those items requiring more than 26 weeks from the time of purchase to delivery. The long-lead items, excluding development items, are:

1.	Temperature sensors	26 weeks
2.	Quality meter	52 weeks
3.	Volumetric flow meter	52 weeks
4.	Superfloc insulation	32 weeks
5.	Receiver tank girth rings	26 weeks

Development Items. To meet the schedule shown in Figure 4-2, it was assumed that certain critical items were developed prior to their need for CFMF. This may require that development and testing begin prior to contract go-ahead. The major development items for the CFMF are:

1. Quantity gauging systems
2. Quality/density flow measurement
3. Receiver tank start basket
4. Zero-g vapor/liquid detectors

4.2 Facility Costs. Rough Order of Magnitude (ROM) cost estimates were prepared for each phase of the facility. The WBS, Master Program Schedule and a component Bill of Materials (BOM), defining the procurement items, provided the basis for this cost estimate. The cost estimates are expressed in December 1980 dollars.

Cost Estimate. The ROM cost is divided into six program elements which, when totaled, form the cost required to develop, fabricate and provide support for the CFMF. The six elements and their cost estimates are:

Program Element	ROM Cost
Analysis and Design	$ 800,000
Qualification	$ 700,000
Phase I, Mission One	$1,300,000
Phase II, Mission Two	$1,100,000
Phase II, Mission Three	$ 600,000
CFME Tank	$3,000,000
TOTAL Program Cost	$7,500,000

Cost Estimates Allocated by Fiscal Year. The cost estimates are expected to be expended per fiscal year in the amounts shown below.

Fiscal Year	CFME Tank	Balance of System	Annual Total
1982	$ 80,000	$ 200,000	$ 280,000
1983	1,525,000	950,000	2,475,000
1984	1,395,000	875,000	2,270,000
1985	-0-	975,000	975,000
1986	-0-	800,000	800,000
1987	-0-	500,000	500,000
1988	-0-	200,000	200,000
TOTALS	$3,000,000	$4,500,000	$7,500,000

5.0 CONCLUSIONS AND RECOMMENDATIONS

Conclusions. The Cryogenic Fluid Management Facility (CFMF) defined by this study will be capable of demonstrating on-orbit cryogenic liquid transfer. The specific technologies necessary to accomplish this are:

- Liquid acquisition and expulsion
- Transfer line cooldown
- Tank cooldown
- Tank fill (nonvented liquid transfer)
- Nonvented tank refill capability
- Start basket performance
- Mass gauging
- Quality and mass flow measurements

The design of the facility was tailored to provide the capability for proving these technologies.

Existing ground support equipment (GSE) for the liquid hydrogen filling of the supply tank may be used without extensive modifications. The additional GSE required to support the facility currently exists at Kennedy Space Center (KSC).

The Safety and Hazard Analysis showed that no single point failure of the CFMF will cause an unsafe condition on the launch pad or in orbit. Use of the Fuel Cell Servicing System for loading the CFMF supply tank will not result in hazards greater than similar cryogenic loading operations at KSC.

The design, development, testing, fabrication and operation of the CFMF will require a span time of approximately seven years. The overall program cost will be $7.5M (in December 1980 dollars).

Recommendations. A number of hardware development items and Shuttle operational unknowns were identified in this study. Instrumentation and hardware development required for the CFMF are:

- Mass gauging
- Quality measurement

- Volumetric flow measurement
- Start basket
- Screen channel device
- Thermodynamic vent system
- Zero-g liquid/vapor detectors

The Shuttle operational unknowns that need to be determined are:

- Payload flight qualification requirements
- Payload safety requirements
- Prelaunch facility servicing constraints

These items can be found in the Payload Accommodations Handbook; however, there is a high degree of uncertainty and conflicting information. In addition to the operational unknowns, an assessment of the potential and cost for GSE modifications to meet the CFMF launch requirements should be conducted.

To ensure the efficient and timely development of the CFMF, it is recommended that research and development of the hardware development items and resolution of the Shuttle operational unknowns begin as soon as possible.