N O T I C E

THIS DOCUMENT HAS BEEN REPRODUCED FROM MICROFICHE. ALTHOUGH IT IS RECOGNIZED THAT CERTAIN PORTIONS ARE ILLEGIBLE, IT IS BEING RELEASED IN THE INTEREST OF MAKING AVAILABLE AS MUCH INFORMATION AS POSSIBLE

June, 1981

LIDS-TH-1090

Research Supported By:

*NASA Ames Research Center*
*Grant NASA/NGL-22-009-124*
*OSP Number 76265*

# PROPERTIES OF MULTIVARIABLE ROOT LOCI

Andrew Emil Yagle

N81-23829

(NASA-CR-164319) PROPERTIES OF MULTIVARIABLE ROOT LOCI M.S. Thesis (Massachusetts Inst. of Tech.) 128 p HC A07/MF A01 CSCL 12A G3/64 Unclas 42393

JUN 1981
RECEIVED
NASA STI FACILITY
ACCESS DEPT.

Laboratory for Information and Decision Systems
MASSACHUSETTS INSTITUTE OF TECHNOLOGY, CAMBRIDGE, MASSACHUSETTS 02139

June, 1981 LIDS-TH-1090

# PROPERTIES OF MULTIVARIABLE ROOT LOCI

by

Andrew Emil Yagle

This report is based on the unaltered thesis of Andrew Emil Yagle, submitted in partial fulfillment of the requirements for the degree of Master of Science at the Massachusetts Institute of Technology, June 1981. The research was conducted at the M.I.T. Laboratory for Information and Decision Systems, with support provided in part by the NASA Ames Research Center under grant NASA/NGL-22-009-124.

Laboratory for Information and Decision Systems
Massachusetts Institute of Technology
Cambridge, Massachusetts 02139

1

# PROPERTIES OF

# MULTIVARIABLE ROOT LOCI

by

Andrew Emil Yagle

B.S., University of Michigan
(1978)

SUBMITTED IN PARTIAL FULFILLMENT

OF THE REQUIREMENTS FOR THE DEGREE OF

MASTER OF SCIENCE

at the

Massachusetts Institute of Technology

June, 1981

© Andrew Emil Yagle, 1981

The author hereby grants to M.I.T. permission to reproduce and to distribute copies of this thesis document in whole or in part.

Signature of Author Andrew E. Yagle
Department of Electrical Engineering
and Computer Science, May 8, 1981

Certified by Bernard C. Levy
Bernard C. Levy,
Thesis Supervisor

Accepted by _____
Arthur C. Smith, Chairman
Departmental Committee on Graduate Students

# PROPERTIES OF

# MULTIVARIABLE ROOT LOCI

by

Andrew Emil Yagle

Submitted to the Department of Electrical Engineering and Computer Science on May 8, 1981 in partial fulfillment of the requirements for the Degree of Master of Science.

## ABSTRACT

Various properties of multivariable root loci are analyzed from a frequency-domain point of view by using the technique of Newton polygons, and some generalizations of the SISO root locus rules to the multivariable case are pointed out. The behavior of the angles of arrival and departure is related to the Smith-MacMillan form of G(s), and explicit equations for these angles are obtained. After specializing to first-order and a restricted class of higher-order poles and zeros, some simple equations for these angles that are direct generalizations of the SISO equations are found.

The unusual behavior of root loci on the real axis at branch points is studied. The SISO root locus rules for break-in and break-out points are shown to generalize directly to the multivariable case. Some methods for computing both types of points are presented.

An equation for the number of loci on the real axis at any point is derived. The special cases of 2×2 G(s) and symmetric G(s) are investigated separately. Finally, for high gains, equations for the first-order asymptotes and pivots are derived, and previous results on higher-order asymptotes are reviewed.

Thesis Supervisor: Bernard C. Levy
Title: Assistant Professor of Electrical Engineering

## ACKNOWLEDGMENTS

I would like to express my gratitude and appreciation to my thesis supervisor, Bernard Levy, whose guidance and ideas were invaluable to the production of this thesis. Without his advice and support, this work would not have been possible.

I would also like to thank Hatsy Thompson for the outstanding job she did in typing this thesis.

Finally, I would like to thank my parents, also without whom this work would not have been possible. To them I dedicate this thesis.

# TABLE OF CONTENTS


| | | Page |
|---|---|---|
| CHAPTER I | Introduction | 7 |
| 1.1 | Motivation and Summary of Results | 7 |
| 1.2 | Notation | 10 |
| CHAPTER II | Background | 12 |
| 2.1 | Introduction | 12 |
| 2.2 | The Basic Problem | 12 |
| 2.3 | The Characteristic Equation | 15 |
| 2.3.1 | Definitions | 15 |
| 2.3.2 | Poles, Zeros, Branch and Break Points | 17 |
| 2.4 | The Newton Polygon Technique | 20 |
| 2.5 | The SISO Root Locus | 25 |
| CHAPTER III | Angles of Arrival and Departure | 27 |
| 3.1 | Introduction | 27 |
| 3.2 | Review of State-Space Results | 28 |
| 3.3 | Results from the Smith-MacMillan Form | 30 |
| 3.3.1 | First-Order Poles and Zeros | 31 |
| 3.3.2 | Multiple Poles and Zeros | 39 |
| 3.4 | Results from Laurent Series | 50 |
| 3.5 | Results from Toeplitz Matrices | 60 |
| CHAPTER IV | Branch Points and Break Points | 68 |
| 4.1 | Introduction | 68 |

| | | Page |
|---|---|---|
| | 4.2 Branch Points | 69 |
| | 4.2.1 Computation of Branch Points | 69 |
| | 4.2.2 Effects of Branch Points on Root Loci | 70 |
| | 4.3 Break Points | 74 |
| | 4.3.1 Computation of Break Points | 74 |
| | 4.3.2 Breakin and Breakout Angles | 75 |
| CHAPTER V | Root Loci on the Real Axis | 78 |
| | 5.1 Introduction | 78 |
| | 5.2 The Case of Two-Input-Two-Output Systems | 79 |
| | 5.3 The General Case | 84 |
| | 5.4 The Case of Symmetric G(s) | 90 |
| CHAPTER VI | Asymptotic Behavior of Root Loci | 97 |
| | 6.1 Introduction | 97 |
| | 6.2 First-Order Asymptotes and Pivots | 98 |
| | 6.3 An Illustrative Example | 103 |
| | 6.4 Higher-Order Asymptotes | 105 |
| CHAPTER VII | Other Results | 110 |
| | 7.1 Introduction | 110 |
| | 7.2 Results | 110 |
| CHAPTER VIII | Conclusion | 117 |
| References | | 121 |
| Appendix | The Resultant | 123 |

## LIST OF FIGURES


| | | Page |
|---|---|---|
| 2.1 | The Basic Problem | 13 |
| 2.2 | Definition of Angles | 18 |
| 2.3 | Newton Polygon for Example 2.1 | 24 |
| 3.1 | Newton Polygon for the Generic Case of First-Order Angles of Departure | 32 |
| 3.2 | Newton Polygon for the Generic Case of First-Order Angles of Approach | 37 |
| 3.3 | Newton Polygon for the Generic Case of Higher-Order Angles of Departure | 44 |
| 3.4 | Newton Polygon for the Case of TR $G_{-1} = 0$, for First-Order Angles of Departure | 53 |
| 3.5 | Newton Polygon for the Generic Case of a Simple Higher-Order Pole | 56 |
| 5.1 | Root Loci for Example 5.1 | 80 |
| 5.2 | Root Locus for Example 5.2 | 85 |
| 6.1 | Newton Polygon for First-Order Asymptotes | 100 |
| 6.2 | Root Locus for Example 6.1 | 106 |

# CHAPTER I

## Introduction

### 1.1 Motivation and Summary of Results

The main aspect of the problem of designing a feedback compensator for a linear system is that one seeks to characterize the effect of feedback on the closed-loop behavior of the system. A balance must be struck between a characterization so simple that no real insight into the closed-loop system behavior is gained, and one so complex that interpretation of it is too difficult to be useful.

The root locus does a reasonable job of striking such a balance. The root locus technique consists of plotting the paths of the movements of the closed-loop poles in the complex plane as a single feedback parameter is varied. This has two advantages: the locations of the closed-loop poles furnish considerable information on the response of the system, particularly the transient response; and variation of a single parameter gives crude, but simple, notions of the options in pole assignment and the identities of specific poles that must be shifted.

The major disadvantage of the root locus is that little information is furnished on robustness of the closed-loop system. Thus the root locus method nicely complements stability tests such as the Nyquist stability criterion, which give information on system robustness (e.g. phase and gain margins) but only "yes-or-no" information on stability and no information at all on the form of system responses. It should also be noted that by suitable reformulation the effect of variation of an uncertain system parameter can be studied using the root locus.

The root locus for single-input-single-output (SISO) systems was first studied by Evans in 1948 [14] and is treated in detail in any decent elementary control theory text (e.g. [7], [8]); a set of rules for plotting it is given in Chapter II. Investigation of the root locus for multivariable systems began in earnest in the mid-1970s, and is far from being concluded. Research has proceeded along two main lines: the state-space approach used by Shaked, Kouvaritakis, and Owens (e.g. [9], [15], [16]) and the frequency-domain approach used by Postlethwaite and MacFarlane (e.g. [1], [2], [3]).

The state-space approach seems to have been better suited for investigating the behavior of root loci that approach infinity for high feedback gains, and a considerable body of knowledge has been amassed on this subject. However, less information is available on the angles of arrival and departure of loci at zeros and poles, and almost none on breakin and breakout points and the presence of loci on portions of the real axis. The pioneering work of Postlethwaite and MacFarlane suggests that their frequency-domain methods may be better suited for investigating these issues.

The aims of this thesis are threefold: first, to develop and extend the frequency-domain methods of Postlethwaite and MacFarlane into explicit results and equations for the angles of arrival and departure and for the locations of loci on the real axis; second, to show how the well-known SISO root locus rules do or do not generalize to the multivariable case; and third, to serve as a compendium of rules for plotting the multivariable root locus.

We start off by laying in Chapter II the groundwork for the material

to follow. The basic problem is presented, and basic equations obtained from it. Various features of the root locus, such as poles, zeros, angles, and Butterworth patterns, are defined, and the SISO root locus rules are reviewed.

We will obtain results on angles of loci by finding series approximations for the loci near the point of interest. These will be obtained by using the Newton polygon technique, an ingenious graphical device presented and demonstrated in Chapter II.

Results for angles of arrival and departure are presented in Chapter III. After quickly reviewing the state-space results on this subject, new results and explicit equations for the cases of both first-order and higher-order poles and zeros are obtained. In particular, the case of higher-order poles and zeros turns out to be vastly more complex than might be expected from the SISO rules.

After considering the general case, we specialize to first-order and a certain "simple" class of higher-order poles and zeros. Using an approach based on constructing a Laurent series of the system transfer function, simpler equations are obtained that turn out to be nice generalizations of the SISO equations. These results have not, to our knowledge, appeared in the literature.

Unusual behavior of the root locus, such as a locus on the real axis suddenly turning around, are associated with entities called branch points. We discuss these briefly in Chapter IV, and present some equations describing their effects on root loci. Also in Chapter IV, breakin and breakout points of multivariable root loci are investigated for the first time. Equations are obtained for computing them, and the angles of

loci breaking in or out are shown to be the same as in the SISO case.

In Chapter V, we address the previously uninvestigated problem of determining the location of root loci on the real axis. This turns out to be vastly more complex than the SISO case, since more than one branch can lie on the real axis at a given point. An equation is obtained for the general case, and other results presented. The case of two inputs and two outputs is investigated separately, and is shown to be considerably simpler than the general case.

In Chapter VI the asymptotic behavior of root loci is considered. For the generic case of first-order asymptotes and pivots, simple equations are given for angles and pivots. For higher-order asymptotes, the results of Kouvaritakis and Shaked [15] and Sastry and Desoer [17] are reviewed.

Finally, in Chapter VII we include, for the sake of completeness, some miscellaneous results on the multivariable root locus. These include methods for computing graphical bounds on the loci, intersections with the imaginary axis, and other items that might be helpful in plotting the multivariable root locus.

## 1.2 Notation

$A_i(s)$ represents a <u>scalar</u> polynomial in s. Otherwise, matrices are indicated by capital letters, and scalars and vectors are indicated by small letters. No underlines are used; whether a quantity is a scalar or a vector is clear from the context. $A^T$ is the transpose of A, DET A the determinant of A, TR A the trace of A, and DIAG $[a_1 \ldots a_n]$ the n×n matrix with elements $a_1 \ldots a_n$ along the main diagonal and zeros elsewhere. ARG z is the principal argument of complex variable z, O(f(x)) the exponent of

the lowest power of x in a power series expansion of the function f(x), and SGN [x] the sign function of x (one if x is positive, minus one if x is negative).

Equations, examples, figures, lemmas, and theorems are numbered by chapter and position within the chapter; equation (3.17) is the seventeenth equation in Chapter III.

All root locus diagrams are in the complex s plane, imaginary part plotted against real part. Open-loop poles are represented by x's, open-loop finite zeros by o's, and branch points by triangles.

# CHAPTER II

## Background

### 2.1 Introduction

In this chapter, we lay the groundwork for the results and analyses to follow. First, the basic problem from which the multivariable root loci are obtained is described. The characteristic equation is defined from the loop transfer-function matrix, and other equations are defined in terms of this equation. These equations are the starting point for most of the derivations to follow. The unusual behavior of multivariable root loci is accounted for by noting that the root loci are branches of an algebraic function. We briefly discuss poles, zeros, branch points, break points, and single-point loci, and define these points from the characteristic equation. We also define Butterworth patterns and angles of root loci. The Newton polygon technique, which gives a series approximation to a function of two variables near a zero of the function, is described. We will use this technique to obtain results on the angles of arrival and departure at zeros and poles. Finally, the SISO (single-input-single-output) root locus rules are quickly reviewed for comparison to their multivariable generalizations.

### 2.2 The Basic Problem

Consider the feedback configuration shown in Fig. 2.1. $S_1$ and $S_2$ are linear multivariable dynamical systems and k is a positive real number. It may be shown [2] that the loop transfer-function matrix for this configuration is the matrix kG(s), where G(s) is the product of the transfer function matrices of $S_2$ and $S_1$ (in that order). If the feedback

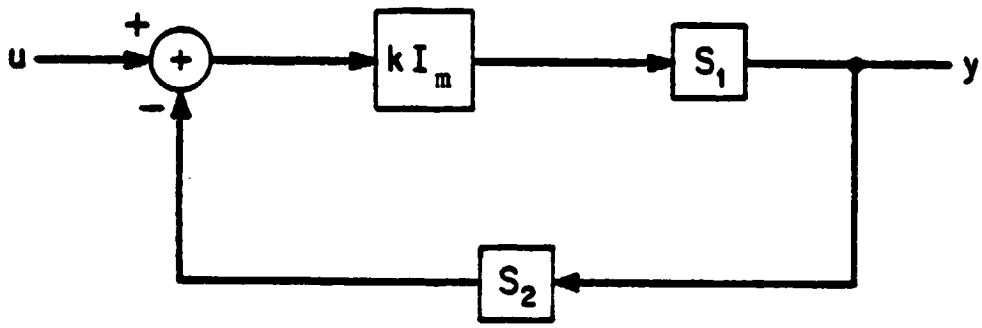


Figure 2.1

The Basic Problem

loop were broken between $S_2$ and the summation block and signals injected at the break, the returned signals at the break would be related to the injected signals by minus the loop transfer-function matrix. G(s) is an m×m rational matrix function of the complex variable s, and is assumed to have full rank and be strictly proper.

The return-difference matrix for this configuration is I + kG(s), and the closed-loop poles are given by the solutions of

$$\mathrm{DET}\ [I + kG(s)] = 0. \tag{2.1}$$

As k is varied from zero to infinity, the closed-loop poles will vary. The plot in the complex plane of the paths swept out by the closed-loop poles is the root locus.

For some results a state-space formulation will be appropriate. The system considered is given by

$$\begin{aligned} \dot{x} &= Ax + Bu \\ y &= Cx \\ u &= -kKy \end{aligned} \tag{2.2}$$

where $x \in R^n$ and $y, u \in R^m$. B and C are assumed to have full rank. Now the root locus is the paths swept out by the eigenvalues of the closed-loop system matrix

$$A_{cl} = A - kBKC \tag{2.3}$$

as k varies from zero to infinity.

## 2.3 The Characteristic Equation

### 2.3.1 Definitions

Following the notation of Postlethwaite and MacFarlane [1, 2, 3], we define the characteristic equation

$$\Delta(g,s) \triangleq \mathrm{DET}\,[gI - G(s)] = 0. \tag{2.4}$$

From (2.4) we may define two multi-valued functions g(s) and s(g). However, these are not ordinary functions of a complex variable, but are instead algebraic functions [4]. The values of an algebraic function differ from those of an ordinary function of a complex variable in that the latter form a single analytic function, while the former form a set of analytic functions. Each individual function in this set is called a branch of the algebraic function.

The root loci are solutions to

$$g(s) = -\frac{1}{k}\ ,\ k \text{ real and positive} \tag{2.5}$$

and are thus branches of the algebraic function $s(g) = s(-\frac{1}{k})$ for all positive real k [2]. (Single-point loci, to be discussed shortly, are omitted.) It is important to note that the multivariable root loci are branches of an algebraic function, since this means that their behavior can be much more complicated than that of single-input-single-output (SISO) root loci. This follows because an algebraic function has as its domain a Riemann surface, which consists of several copies, or "sheets," of the complex plane that have been "cut" and "stitched together" in such a way as to make the function continuous on the surface. A technique for doing this is described in MacFarlane and Postlethwaite [1, 2] for $\Delta(g,s)$.

As k varies, the argument of the algebraic function $s(-\frac{1}{k})$ that describes the multivariable root loci may pass through a <u>branch point</u> and "jump" from one sheet to another. When this happens, the behavior of the root loci may change abruptly -- a locus may swerve, loop around, or act in an even more exotic manner (see [5], p. 64). A not uncommon occurrence is for a locus on the real axis to abruptly turn around; this behavior is discussed in Chapter IV.

If $\Delta(g,s)$ is reducible (i.e. can be factored over the field of rational functions), there will be several sets of root loci corresponding to the several algebraic functions each defined on a different Riemann surface. In the extreme case (e.g. G(s) diagonal) where $\Delta(g,s)$ can be completely factored into terms of the form $(g - g_i(s))$, $g_i(s)$ a <u>rational</u> function of s, the multivariable root locus becomes a superposition of m SISO root loci. Reducibility of $\Delta(g,s)$ will not affect any of the results of this thesis.

The following expansion [2] will be used extensively in this thesis:

$$\begin{aligned}\Delta(g,s) &= \text{DET}\,[gI - G(s)] = g^m - (\text{TR}\,G(s))g^{m-1} \\ &\quad + \sum(\text{principal minors of } G(s) \text{ of order } 2)g^{m-2} - \ldots \\ &\quad + (-1)^m\,\text{DET}\,G(s) = 0\,. \end{aligned} \tag{2.6}$$

Multiplying through by $A_m(s)$, the least common denominator of the nonzero principal minors of all orders of G(s), we obtain

$$\Phi(g,s) \triangleq A_m(s)g^m + A_{m-1}(s)g^{m-1} + \ldots + A_1(s)g + A_o(s) = 0 \tag{2.7}$$

where the $A_i(s)$ are all polynomials. We can quickly rewrite this as

$$\Psi(s,g) \triangleq B_n(g)s^n + B_{n-1}(g)s^{n-1} + \ldots + B_o(g) = \Phi(g,s) = 0 \tag{2.8}$$

where the $B_i(g)$ are all polynomials and n is the largest degree of the $A_i(s)$.

The angle of a root locus $s_i(k)$ is the angle a tangent to the locus makes with the positive real axis. From Fig. 2.2,

$$\theta = \lim_{\delta k \to 0^+} \text{ARG } [s_i(k + \delta k) - s_i(k)]$$

$$= \lim_{\delta k \to 0^+} \text{ARG } [\frac{ds_i}{dk} \delta k] = \text{ARG } [\frac{ds_i}{dk}]. \tag{2.9}$$

Note that

$$\theta = \text{ARG } [\frac{ds_i}{dk}] = \text{ARG } [\frac{ds_i}{dg}] + \text{ARG } [\frac{dg}{dk}]$$

$$= \text{ARG } [\frac{ds_i}{dg}] + \text{ARG } [\frac{1}{k^2}] = \text{ARG } [\frac{ds_i}{dg}]. \tag{2.10}$$

A set of loci $\{s_i(k), i = 1 \ldots r\}$ form an $r^{th}$-order Butterworth pattern if their asymptotic behavior (as $k \to 0$ or $k \to \infty$) is such that

$$s_i(k) \cong (c_r k)^{\frac{1}{r}} + p_r \tag{2.11}$$

where $c_r$ and $p_r$ are constants ($p_r$ is called the pivot in the case $s \to \infty$), and

$$\theta(s_i) \cong \frac{1}{r} (\theta_r + 360°i), \; i = 1 \ldots r. \tag{2.12}$$

Note that this is different from the Butterworth patterns associated with optimal root loci, which are the left half-plane portions of larger Butterworth patterns associated with the root square locus.

### 2.3.2 Poles, Zeros, Branch and Break Points

Consider the equation

$$\Phi(g,s) = A_m(s)g^m + \ldots + A_o(s) = 0. \tag{2.13}$$

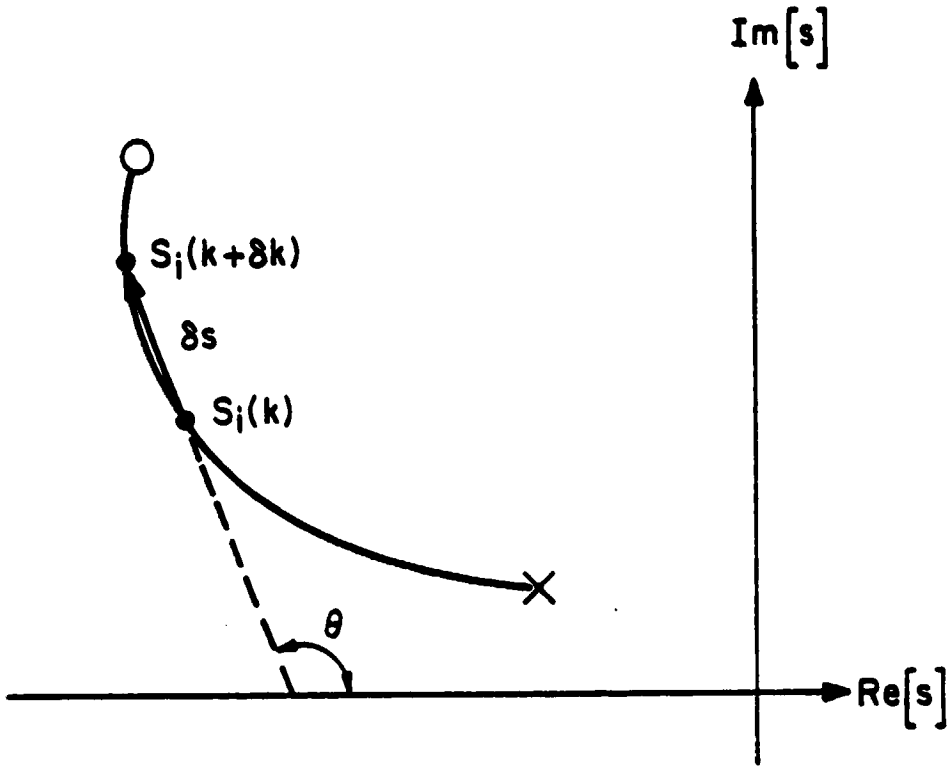


Figure 2.2

Definition of Angles

As $k \to \infty$, or $g \to 0$, we would expect the root loci to either go to infinity or approach finite zeros. In fact, setting $g = 0$ in equation (2.13) gives the solutions to

$$A_o(s) = 0 \tag{2.14}$$

as the points approached by the root loci that stay finite. Similarly, making the substitution $g = -\frac{1}{k}$, multiplying by $(-k)^m$, and setting $k = 0$ in equation (2.13) gives the solutions to

$$A_m(s) = 0 \tag{2.15}$$

as the points from which the root loci depart. The question naturally arises whether the solutions to equations (2.14) and (2.15) are in fact the zeros and poles of G(s). The answer to this question reveals a property unique to the multivariable root locus -- the existence of degenerate, <u>single-point</u> loci.

It is well-known that the pole polynomial p(s) of G(s) is the least common denominator of all non-zero minors of all orders of G(s). However, $A_m(s)$ is the lcd of all non-zero <u>principal</u> minors of all orders of G(s). Let e(s) be the lcd of all non-zero <u>non-principal</u> minors, with all factors common to $A_m(s)$ removed. Then

$$p(s) = A_m(s)\ e(s). \tag{2.16}$$

Since G(s) has full rank, its zero polynomial z(s) is its pole polynomial multiplied by the only $m \times m$ minor, DET G(s). Then we have

$$\begin{aligned} z(s) &= p(s)\ \text{DET}\ G(s) = e(s)\ A_m(s)\ \text{DET}\ G(s) \\ &= (-1)^m A_o(s)\ e(s). \end{aligned} \tag{2.17}$$

Thus the loci that vary with k do in fact depart from the poles of G(s) and arrive at the finite zeros of G(s) (or at infinity). However, other loci start at poles of G(s), remain where they are, and "become" zeros of G(s)! It is important to note that these "single-point loci," given by solutions to

$$e(s) = 0 \tag{2.18}$$

are not uncontrollable or unobservable modes of a state-space realization of G(s) (decoupling zeros), nor are they poles cancelled when G(s) is formed from the transfer function matrices of two separate systems $S_1$ and $S_2$ (recall Fig. 2.1). They are a phenomenon not found in the SISO case -- they appear only in the multivariable case.

However, it is the usual case that e(s) = 1, i.e. there are no single-point loci. And since there is nothing to state about their behavior, they will not be considered further.

Branch points are points where $\Phi(g,s) = 0$ has a multiple root $g_o$. They are associated with unusual behavior of the root locus, since the cuts from which a Riemann surface is formed out of several copies of the complex plane are made between branch points, or between a branch point and infinity. Hence loci can "jump" from one Riemann surface sheet to another, and behave strangely, at branch points.

Break points, short for break-in and break-out points, are points where $\Phi(g,s)$ has a multiple root $s_o$. They have the same meaning they do in the SISO case. Break points and branch points will be discussed in Chapter IV.

## 2.4 The Newton Polygon Technique

The Newton polygon technique is a graphical device that can be used to find a series representation of a function f(x,y) in the vicinity of a

zero of the function. It plays a central role in this thesis, and understanding it is essential for reading Chapter III. The simple treatment of it given here will be sufficient for the purposes of this thesis; for more details, see Walker [6]. A theoretical treatment "deriving" the Newton polygon is given first, followed by a step-by-step procedure and an example.

Consider a function of two variables

$$f(x,y) = A_o + A_1 y + A_2 y^2 + \ldots + A_n y^n \tag{2.19}$$

with $n > 0$, $A_n \neq 0$, and $A_i \in K\{x\}$, where $K\{x\}$ is the field of all functions of x that can be written as a fractional power series in x.

Puiseux's Theorem [4] states that $K\{x\}$ is algebraically closed. This means that if $\bar{y}$ is a zero of $f(x,y)$ then $\bar{y}$ can be written as a fractional power series in x

$$\bar{y} = c_1 x^{z_1} + c_2 x^{(z_1+z_2)} + c_3 x^{(z_1+z_2+z_3)} + \ldots \tag{2.20}$$

with $c_1 \neq 0$, $z_1 \geq 0$, $z_i > 0$ for $i > 1$ (we discard the case $\bar{y} = 0$, which occurs if and only if $A_o = 0$). Puiseux's Theorem is analogous to stating that since the field of complex numbers is algebraically closed, any polynomial with complex coefficients has a complex zero.

We wish to find possible values of $z_1$ and the values of $c_1$ associated with them, i.e. obtain a lowest-order approximation to $\bar{y}$. Substituting (2.20) in (2.19), we obtain

$$\begin{aligned} f(x,\bar{y}) = {} & A_o + c_1 A_1 x^{z_1} + c_1^2 A_2 x^{2z_1} + \ldots + c_1^n A_n x^{nz_1} \\ & + [c_2 A_1 x^{(z_1+z_2)} + c_2^2 A_2 x^{(2z_1+2z_2)} \\ & + 2c_1 c_2 A_2 x^{(2z_1+z_2)} + \ldots ] \end{aligned} \tag{2.21}$$

Since $z_2 > 0$, each of the bracketed terms has order strictly greater than the order of some unbracketed term. Considering the case of small x, a necessary condition for $f(x,\bar{y}) = 0$ is that the term of lowest order have coefficient zero. Since $c_1 \neq 0$, at least two different terms must have the same (lowest) order, and the sum of the coefficients of these terms must be zero. Thus there are at least two (and possibly more) indices j and k such that

$$O(c_1^j A_j x^{jz_1}) = O(c_1^k A_k x^{kz_1}) \leq O(c_1^i A_i x^{iz_1}), \; i = 0 \ldots n \tag{2.22}$$

where $O(f(x))$ is the exponent of the <u>lowest</u> power of x appearing in a series expansion of $f(x)$. We may write

$$A_i = b_i x^{a_i} + \text{(higher order terms)} \tag{2.23}$$

where $a_i = O(A_i)$ (recall $A_i \in K\{x\}$). Then (2.22) becomes

$$a_j + jz_1 = a_k + kz_1 \leq a_i + iz_1, \; i = 0 \ldots n \tag{2.24}$$

and the sum of the coefficients of the terms of lowest order must be zero:

$$\sum_i c_1^i b_i = 0 \tag{2.25}$$

summed over the points of the segment giving that value of $z_1$.

The Newton polygon is a graphical device that yields possible values of $z_1$ satisfying (2.24). The polygon for the example to follow is given in Fig. 2.3. It is constructed as follows:

1. Set up a cartesian coördinate system, with u and v axes, and plot the $n + 1$ points $P_i = (u,v) = (i,a_i)$, $i = 0 \ldots n$, where $a_i = O(A_i)$ and the $A_i$ are from (2.19).

2. Join $P_o$ to $P_n$ with a convex polygonal arc each of whose vertices is a $P_i$ and such that no $P_i$ lies below the arc. This may be done quickly by inspection.

   Each segment of the arc defines a line $v + \sigma u = M$, where $-\sigma$ is the slope and M is the v-intercept. This line has the property

$$v + \sigma u \leq a_i + \sigma i, \; i = 0 \ldots n. \tag{2.26}$$

   Let $P_j$ and $P_k$ be the endpoints of a segment. Then

$$a_j + \sigma j = a_k + \sigma k = v + \sigma u \leq a_i + \sigma i, \; i = 0 \ldots n. \tag{2.27}$$

   Clearly $z_1 = \sigma$ will satisfy (2.24), so that <u>possible values of $z_1$ are minus the slopes of the segments of the Newton polygon</u>.

3. Use (2.25) to find the $c_1$ associated with each $z_1$. For the $z_1$ determined by the segment with endpoints $P_j$ and $P_k$, we have, for the $b_i$ defined in (2.23),

$$c_1^j b_j + c_1^k b_k = 0. \tag{2.28}$$

   If there is another point $P_h$ on this segment, we have

$$c_1^h b_h + c_1^j b_j + c_1^k b_k = 0. \tag{2.29}$$

This technique may be extended to compute all of the possible $z_i$ and $c_i$; see [6]. However, we will not require this extension.

<u>Example 2.1</u> We wish to find series approximations to

$$f(x,y) = (7x^2 + 5x + 2)y^4 + (8x^3 - 6x)y^3 + 4x^2y^2 + (37x^7 - 11x^5)y + (x^{10} + 4x^8 - x^6) = 0$$

in the vicinity of the zero $f(0,0) = 0$. We identify

$$a_4 = 0, \; b_4 = 2; \; a_3 = 1, \; b_3 = -6; \; a_2 = 2, \; b_2 = 4;$$

$$a_1 = 5, \; b_1 = -11; \; a_o = 6, \; b_o = -1.$$

The Newton polygon is shown in Fig. 2.3. We see that possible values for $z_1$ are

$$z_1 = 1, \; 2$$

and the values of $c_1$ associated with them are the solutions to

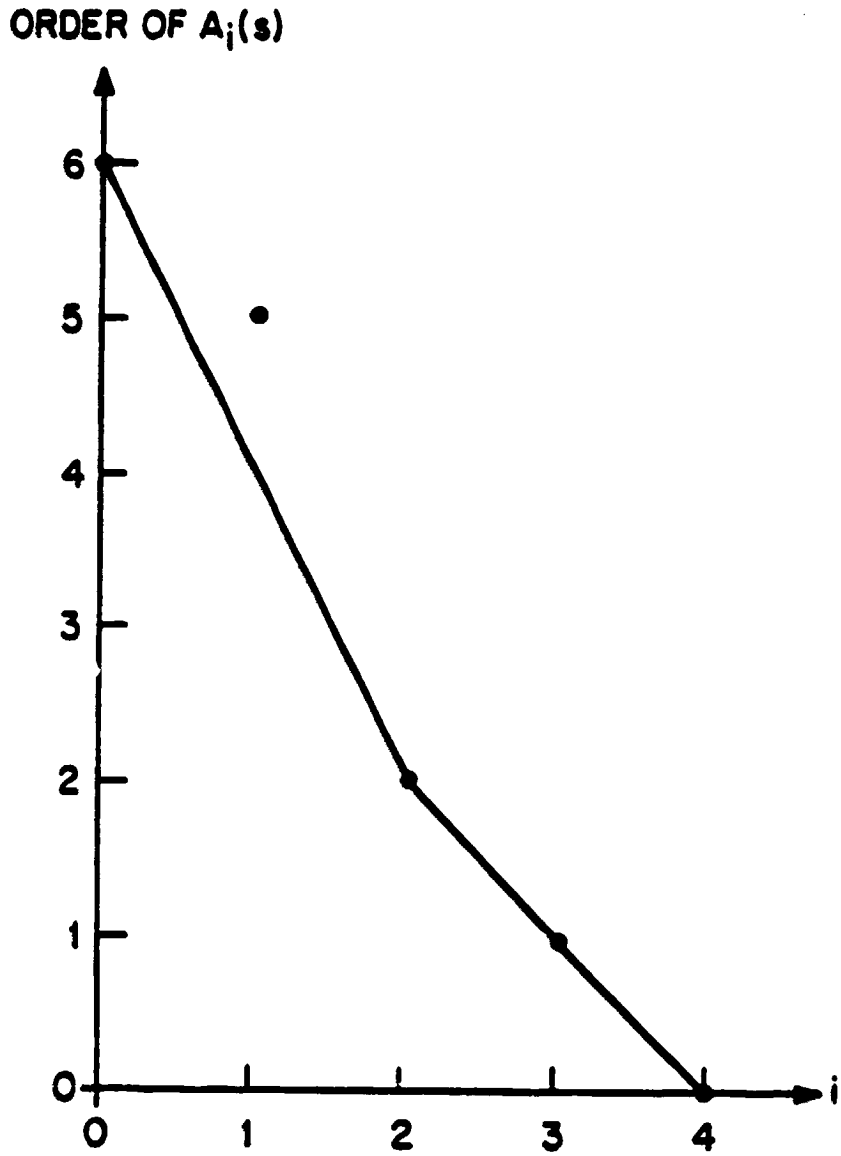


Figure 2.3

Newton Polygon for Example 2.1

$$-1 + 4c_1^2 = 0 \text{ for } z_1 = 2$$

$$4c_1^2 - 6c_1^3 + 2c_1^4 = 0 \text{ for } z_1 = 1$$

which are $c_1 = \frac{1}{2}, -\frac{1}{2}$ for $z_1 = 2$ and $c_1 = 1, 2$ for $z_1 = 1$. So the series approximations are

$$y = \tfrac{1}{2}x^2,\ y = -\tfrac{1}{2}x^2,\ y = x.\ y = 2x.$$

## 2.5 The SISO Root Locus

We quickly review the SISO root locus rules, for comparison with the multivariable root locus rules to be given in this thesis. It will be seen that some of the SISO rules generalize directly, others less directly, and still others not at all. Proofs may be found in any decent elementary control theory text (e.g. [7], [8], etc.).

1. The root locus has n branches, where n is the degree of the denominator polynomial of the open-loop transfer function.

2. All branches of the root locus begin at the open-loop poles. m branches terminate at the finite open-loop zeros, where m is the degree of the numerator polynomial of the open-loop transfer function. The other n - m branches approach infinity along asymptotes described in Rule 3.

3. The branches that approach infinity do so along asymptotes with angles

$$\theta_k = \frac{(2k + 1)180^\circ}{n - m},\ k = 0, 1, \ldots n - m - 1 \tag{2.30}$$

and which intercept the real axis at

$$p = \frac{\sum_{i=1}^{n} p_i - \sum_{i=1}^{n} z_i}{n - m} \tag{2.31}$$

where the $z_i$ are the open-loop zeros and the $p_i$ are the open-loop poles.

4. A branch of the root locus will lie on the real axis for those portions of the real axis that have an odd number of poles and zeros to the right.

5. The root locus is symmetric with respect to the real axis.

6. The angle of departure from a pole is the sum of the angles of all vectors from the zeros to the pole in question, minus the sum of the angles of all vectors from the other poles to the pole in question, plus 180°. Note that this is

$$\theta_{depart} = \frac{1}{k} \text{ARG } [-(s - p_i)^k g(s)|_{s = p_i}] + \frac{n360°}{k}, \; n = 0, 1, \ldots k - 1 \tag{2.32}$$

for the angle of departure from a $k^{th}$-order pole $p_i$ of the scalar transfer function $g(s)$.

7. The angle of approach to or arrival at a finite zero is the sum of the angles of all vectors from the poles to the zero in question, minus the sum of the angles of all vectors from the other zeros to the zero in question (<u>important</u>: recall the definition of "angle" given in Section 2.3.1). Note that this is

$$\theta_{arrival} = \frac{1}{k} \text{ARG } [(s - z_i)^k g^{-1}(s)|_{s = z_i}] + \frac{n360°}{k}, \; n = 0, 1, \ldots k - 1 \tag{2.33}$$

for the angle of arrival at a $k^{th}$-order zero $z_i$.

8. The break-in and break-away points on the real axis may be found by solving

$$\frac{dk}{ds} = 0. \tag{2.34}$$

If several branches are approaching and leaving a break point, their angles are evenly distributed over 360°.

9. If $m \leq n - 2$, the sum of the closed-loop poles is <u>constant</u> as $k$ is varied [8].

# CHAPTER III

## Angles of Arrival and Departure

### 3.1 Introduction

In this chapter we derive some equations for obtaining the angles of arrival (at finite zeros) and the angles of departure (from poles) of multivariable root loci. First, the state-space based results of Shaked [9] and Thompson [5] are reviewed. Shaked's results employ a spectral decomposition; Thompson's results rely on a generalized eigenvalue problem. Thus both are computationally arduous.

Following this, new results are obtained by applying the frequency-domain techniques of Postlethwaite [3]. Postlethwaite's approach is to obtain a series approximation to the root locus in the vicinity of a pole or zero, and then obtain the angles of arrival or departure from this series. By investigating how this series is obtained, we derive more general results. First, the Smith-MacMillan form is used to show that loci generically depart from multiple poles, and arrive at multiple zeros, in Butterworth patterns whose orders come from the structure indices [12] of G(s) at the pole or zero in question. Some equations for the angles of arrival and departure are also obtained.

Next, we use Laurent series expansions of G(s) to derive some simpler equations for the angles of arrival and departure. These equations turn out to be simple generalizations of the SISO equations.

Finally, we arrange the coefficients of the Laurent series expansions of G(s) mentioned above into Toeplitz matrices, and show how the angles of arrival and departure may be obtained from these. We also recall that the

ranks of these Toeplitz matrices are related to the MacMillan orders of G(s) at the pole or zero in question, and in this way all the results of this chapter are tied together.

## 3.2 Review of State-Space Results

The results described in this section were first derived by Shaked [9] and Thompson [5]. They are included here for comparison to the frequency domain results of the following sections. Also, when a system is specified by its (A,B,C) matrices these equations may be simpler, since computation of $G(s) = C(sI - A)^{-1}B$ may be very difficult.

Theorem 3.1 The angles of departure are given by

$$\theta_{depart} = \mathrm{ARG}\ [-v_i^T BKCu_i] \tag{3.1}$$

where $u_i$ and $v_i^T$ are the right and left eigenvectors associated with the open-loop pole (an eigenvalue of A) considered, and $u_i$ and $v_i^T$ have been normalized so that $v_i^T u_i = 1$.

The angles of arrival are given by

$$\theta_{arrival} = \mathrm{ARG}\ [w_i^T K^{-1} x_i] \tag{3.2}$$

where $w_i^T$ and $x_i$ solve, for some $y_i$ and $q_i^T$,

$$\begin{bmatrix} A - z_i I & B \\ -C & 0 \end{bmatrix} \begin{bmatrix} y_i \\ x_i \end{bmatrix} = 0 \tag{3.3}$$

$$\begin{bmatrix} q_i^T & w_i^T \end{bmatrix} \begin{bmatrix} A - z_i I & B \\ -C & 0 \end{bmatrix} = 0 \tag{3.4}$$

where $z_i$ is the finite zero considered, and $x_i$ and $w_i^T$ have been normalized so that $w_i^T x_i = 1$.

Following Shaked [9], one may prove (3.1) by recalling that the closed-loop system matrix is

$$A_{cl} = A - kBKC \tag{3.5}$$

and by letting its spectral decomposition be

$$A_{cl} = \begin{bmatrix} v_1^T \\ \vdots \\ v_n^T \end{bmatrix} \text{DIAG } [s_i] \; [u_1 \; \ldots \; u_n] \tag{3.6}$$

where the $s_i$ are the closed-loop eigenvalues with eigenvectors $u_i$ and left eigenvectors $v_i^T$, all of which are functions of k. We have

$$A_{cl} u_i = s_i u_i \tag{3.7}$$

and differentiating with respect to k and multiplying by $v_i^T$, one gets

$$v_i^T \frac{dA_{cl}}{dk} u_i + v_i^T A_{cl} \frac{du_i}{dk} = \frac{ds_i}{dk} + s_i v_i^T \frac{du_i}{dk} \tag{3.8}$$

so that

$$\frac{ds_i}{dk} = v_i^T \frac{dA_{cl}}{dk} u_i = - v_i^T BKCu_i . \tag{3.9}$$

Letting k = 0 and using equation (2.9), (3.1) is proved. Thompson [5] derives this same result from a generalized eigenvalue problem, and his method is preferable for proving (3.2). Indeed, in [5] Thompson points out several errors in Shaked's paper.

It should be evident that $s_i$, $u_i$, and $v_i^T$ solve the <u>generalized eigenvalue problem</u>

$$\begin{bmatrix} A - s_i I & B \\ -C & -\frac{1}{k} K^{-1} \end{bmatrix} \begin{bmatrix} u_i \\ x_i \end{bmatrix} = 0 \tag{3.10}$$

$$\begin{bmatrix} v_i^T & w_i^T \end{bmatrix} \begin{bmatrix} A - s_i I & B \\ -C & -\frac{1}{k}K^{-1} \end{bmatrix} = 0 \tag{3.11}$$

for some $w_i^T$ and $x_i$.

Differentiating (3.10) with respect to k and multiplying by $[v_i^T \quad w_i^T]$ gives, using (3.11),

$$\begin{bmatrix} v_i^T & w_i^T \end{bmatrix} \begin{bmatrix} -\frac{ds_i}{dk} I & 0 \\ 0 & \frac{1}{k^2}K^{-1} \end{bmatrix} \begin{bmatrix} u_i \\ x_i \end{bmatrix} = 0 \tag{3.12}$$

which can be rearranged into

$$\frac{ds_i}{dk} = \frac{1}{k^2} w_i^T K^{-1} x_i . \tag{3.13}$$

Letting $k \to \infty$, using equation (2.9), and noting that ARG $[\frac{1}{k^2}] = 0$ proves (3.2). Note that Rosenbrock's [10] definition of finite zeros guarantees a non-zero solution to (3.3) and (3.4). This concludes the proof of Theorem 3.1.

## 3.3 Results from the Smith-MacMillan Form

We use the Smith-MacMillan form of G(s) to obtain equations for the angles of departure and arrival using the polynomials $A_i(s)$ of the characteristic equation, and to characterize the loci departing from and arriving at multiple poles and zeros. For simplicity and clarity we consider first the case of first-order poles and zeros, exhibiting the methodology, and then proceed to the far more complex case of multiple poles and zeros. In both cases we consider angles of departure first, and then the angles of

arrival.

### 3.3.1 First-Order Poles and Zeros

We start with

$$\Phi(g,s) = A_m(s)g^m + A_{m-1}(s)g^{m-1} + \ldots + A_o(s) = 0. \tag{3.14}$$

Since we are first interested in angles of departure, i.e. the behavior of the root loci as $k \to 0$ and $g \to -\infty$, we make the substitution $g = -\frac{1}{k}$ and multiply by $(-k)^m$, yielding

$$A_o(s)(-1)^m k^m + A_1(s)(-1)^{m-1}k^{m-1} + \ldots - A_{m-1}(s)k + A_m(s) = 0. \tag{3.15}$$

Let $p_i$ be a first-order pole, and define the following:

$$\tilde{s} = s - p_i \tag{3.16}$$

$$A_m(s) = A_m(\tilde{s} + p_i) = a_1\tilde{s} + a_2\tilde{s}^2 + \ldots \tag{3.17}$$

$$-A_{m-1}(s) = -A_{m-1}(\tilde{s} + p_i) = b_o + b_1\tilde{s} + b_2\tilde{s}^2 + \ldots \tag{3.18}$$

where the right sides of (3.17) and (3.18) are finite polynomials. Note that the constant term of (3.17) is zero, since $A_m(p_i) = 0$.

By applying the Newton polygon technique to (3.17) and (3.18), we may obtain a series approximation to the locus in the vicinity of the pole $p_i$, and obtain the angle of departure at once. In particular, if $b_o$ and $a_1$ are both non-zero, the Newton polygon will be as in Fig. 3.1. We then have

$$k \approx c\tilde{s} \text{ as } (\tilde{s},k) \to (0,0) \tag{3.19}$$

where c solves

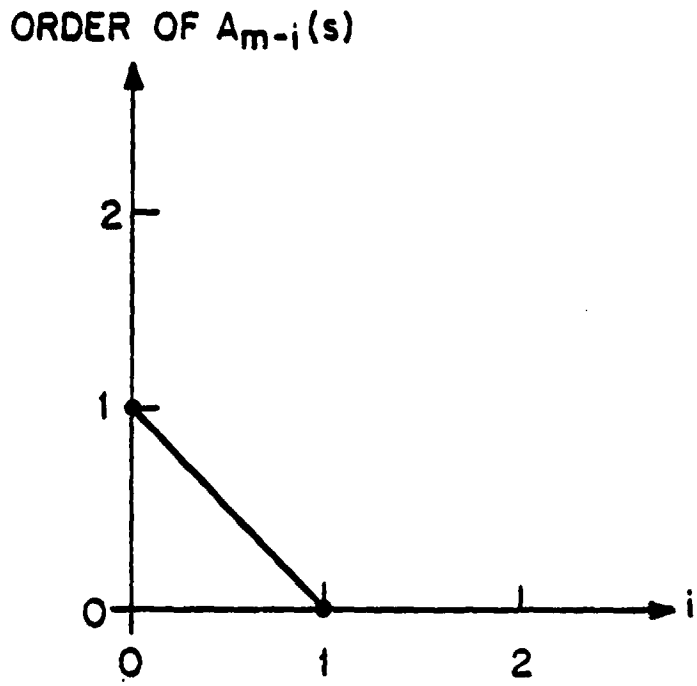


Figure 3.1

Newton Polygon for the Generic Case

of First-Order Angles of Departure

$$a_1 + cb_o = 0. \tag{3.20}$$

This gives

$$\tilde{s} \cong -\frac{b_o}{a_1} k \text{ as } (\tilde{s},k) \to (0,0) \tag{3.21}$$

and, using the definition of angle,

$$\theta_{depart} = \text{ARG } [-\frac{b_o}{a_1}]. \tag{3.22}$$

We will refer to the case where $a_1$ and $b_o$ are both non-zero as the <u>generic</u> case. The word "generic" is used to describe a property of a finite set of parameters which holds for all values of these parameters except those satisfying a finite number of polynomial equations [21]. Thus a generic property "almost always holds." The property that $a_1$ and $b_o$ are both non-zero is indeed generic, since it will be shown shortly that $a_1$ is always non-zero if $p_i$ is a first-order pole, and that $b_o$ is zero only if $p_i$ is a root of both $A_m(s)$ and $A_{m-1}(s)$. This can occur only if the coefficients of $A_m(s)$ and $A_{m-1}(s)$ satisfy a <u>polynomial equation</u> obtained by setting the resultant (see Appendix) of $A_m(s)$ and $A_{m-1}(s)$ equal to zero.

Now write G(s) in the Smith-MacMillan form

$$G(s) = U(s) \text{ DIAG}\left[\frac{n_1(s)}{d_1(s)}, \ldots, \frac{n_m(s)}{d_m(s)}\right] V(s) \tag{3.23}$$

where U(s) and V(s) are unimodular (have constant determinants) and where $n_i(s) \mid n_j(s)$ and $d_j(s) \mid d_i(s)$ for $1 \le i \le j \le m$. (Recall that G(s) is mxm and has full rank.) Also, let

$$V(s)U(s) \triangleq W(s) = [w_{ij}(s)]. \tag{3.24}$$

We may write

$$\Delta(g,s) = \text{DET}\ [gI - G(s)] = \text{DET}\ [gI - U(s)\ \text{DIAG}\left[\frac{n_i(s)}{d_i(s)}\right] V(s)]$$

$$= \text{DET}\ [gI - \text{DIAG}\left[\frac{n_i(s)}{d_i(s)}\right] V(s)U(s)] \tag{3.25}$$

and we may obtain $\Phi(g,s)$ from the right side of (3.25).

We now state and prove the following theorem:

<u>Theorem 3.2</u> If and only if $w_{11}(p_i) \neq 0$, then we have

$$\theta_{\text{depart}} = \text{ARG}\left[-\frac{b_o}{a_1}\right] = \text{ARG}\left[\frac{A_{m-1}(s)}{\frac{d}{ds}A_m(s)}\ \Big|_{s\ =\ p_i}\right]. \tag{3.26}$$

(Note that this corresponds to the "generic case" discussed earlier.)

We prove Theorem 3.2 by showing that $a_1$ and $b_o$ are non-zero if and only if $w_{11}(p_i)$ is non-zero. Then the theorem follows immediately from (3.22), while the expressions for $a_1$ and $b_o$ follow immediately from (3.17) and (3.18).

We observe first that, since $p_i$ is a single pole,

$$A_m(s) = (s - p_i)\tilde{A}_m(s) = \tilde{s}\tilde{A}_m(s) = a_1\tilde{s} + a_2\tilde{s}^2 + \ldots \tag{3.27}$$

where $\tilde{A}_m(p_i) \neq 0$. Dividing by $\tilde{s}$ and setting $s = p_i$ immediately gives

$$a_1 = \tilde{A}_m(p_i) \neq 0. \tag{3.28}$$

As for $b_o$, note that

$$-A_{m-1}(s) = A_m(s)\ \text{TR}\ G(s) = A_m(s)\sum_{i=1}^{m} \frac{n_i(s)}{d_i(s)}\, w_{ii}(s) \tag{3.29}$$

and since $p_i$ is a single pole, we may write

$$d_1(s) = (s - p_i)\tilde{d}_1(s) \tag{3.30a}$$

$$\tilde{d}_1(p_i),\ d_2(p_i),\ \ldots\ d_m(p_i) \neq 0 \tag{3.30b}$$

so that (3.29) becomes

$$-A_{m-1}(s) = \tilde{A}_m(s)\,\frac{n_1(s)}{\tilde{d}_1(s)}\,w_{11}(s) + A_m(s)\sum_{i=2}^{m}\frac{n_i(s)}{d_i(s)}\,w_{ii}(s). \tag{3.31}$$

Since $n_1(s)$ and $d_1(s)$ are relatively prime, $n_1(p_i)$ is non-zero. Therefore, by combining (3.18), (3.30b), and (3.31), we find that

$$b_o = -A_{m-1}(p_i) = \tilde{A}_m(p_i)\,\frac{n_1(p_i)}{\tilde{d}_1(p_i)}\,w_{11}(p_i)$$

$$+ A_m(p_i)\sum_{j=2}^{m}\frac{n_j(p_i)}{d_j(p_i)}\,w_{jj}(p_i). \tag{3.32}$$

Since the second term vanishes, $b_o$ is non-zero if and only if $w_{11}(p_i)$ is non-zero. This proves Theorem 3.2.

Let us now consider the angle of arrival at a finite zero $z_i$. Since we are interested in the behavior of loci as $k \to \infty$, or $g \to 0$, we may work with

$$\Phi(g,s) = A_m(s)g^m + \ldots + A_1(s)g + A_o(s) = 0. \tag{3.33}$$

We now make new definitions

$$\tilde{s} = s - z_i \tag{3.34}$$

$$A_o(s) = A_o(\tilde{s} + z_i) = a_1\tilde{s} + a_2\tilde{s}^2 + \ldots \tag{3.35}$$

$$A_1(s) = A_1(\tilde{s} + z_i) = b_o + b_1\tilde{s} + b_2\tilde{s}^2 + \ldots \tag{3.36}$$

As before, we consider the <u>generic case</u> when $b_o$ and $a_1$ are non-zero, for which the Newton polygon is illustrated in Fig. 3.2. The resulting calculations parallel (3.19)-(3.22) (using g instead of k), and the following theorem should not be surprising:

<u>Theorem 3.3</u> The angle of arrival at a first-order zero $z_i$ is given by

$$\theta_{arrival} = \mathrm{ARG}\left[-\frac{b_o}{a_1}\right] = \mathrm{ARG}\left[-\frac{A_1(s)}{\frac{d}{ds}A_o(s)}\Big|_{s=p_i}\right] \tag{3.37a}$$

if and only if

$$\mathrm{DET}\begin{bmatrix} w_{11}(z_i) & \cdots & w_{1\,m-1}(z_i) \\ \vdots & & \vdots \\ w_{m-1\,1}(z_i) & \cdots & w_{m-1\,m-1}(z_i) \end{bmatrix} \neq 0 . \tag{3.37b}$$

However, the proof of Theorem 3.3 is more difficult than the proof of Theorem 3.2. It requires the following lemma, which will be used extensively in the next section.

<u>Lemma 3.1</u> (Binet-Cauchy Theorem) Define the following notation for p×p minors of an n×n matrix A:

$$A\begin{pmatrix} i_1 & \cdots & i_p \\ j_1 & \cdots & j_p \end{pmatrix} \triangleq \mathrm{DET}\begin{bmatrix} a_{i_1 j_1} & \cdots & a_{i_1 j_p} \\ \vdots & & \vdots \\ a_{i_p j_1} & & a_{i_p j_p} \end{bmatrix}, \quad \begin{matrix} 1 \le i_1 < i_2 < \ldots < i_p \le n \\ 1 \le j_1 < j_2 < \ldots < j_p \le n . \end{matrix}$$

Then if $C = AB$, $C\begin{pmatrix} i_1 & \cdots & i_p \\ j_1 & \cdots & j_p \end{pmatrix} = \sum A\begin{pmatrix} i_1 & \cdots & i_p \\ k_1 & \cdots & k_p \end{pmatrix} B\begin{pmatrix} k_1 & \cdots & k_p \\ j_1 & \cdots & j_p \end{pmatrix}$

summed over all possible $1 \le k_1 < k_2 < \ldots < k_p \le n$. (3.38)

This standard result is given and proved in Gantmacher [11].

To show that $a_1 \neq 0$, write

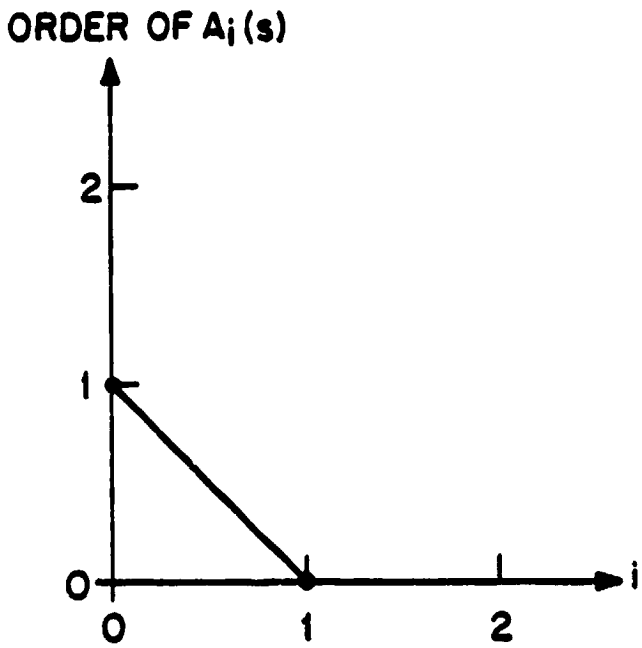


Figure 3.2

Newton Polygon for the Generic Case

of First-Order Angles of Approach

$$A_o(s) = A_m(s)(-1)^m[\text{DET } G(s)]$$

$$= A_m(s)(-1)^m[\text{DET } U(s)][\text{DET } V(s)] \prod_{i=1}^{m} \frac{n_i(s)}{d_i(s)} \tag{3.39}$$

and note that since $z_i$ is a single zero we may write

$$n_m(s) = (s - z_i)\tilde{n}_m(s) \tag{3.40a}$$

$$n_1(z_i), \ldots n_{m-1}(z_i), \tilde{n}_m(z_i) \neq 0. \tag{3.40b}$$

Also note that, excluding single-point loci,

$$A_m(s) = \prod_{i=1}^{m} d_i(s) \tag{3.41}$$

and recall that U(s) and V(s) are unimodular, so their determinants are non-zero constants. Then we have

$$A_o(s) = (-1)^m[\text{DET } U(s)][\text{DET } V(s)][\prod_{i=1}^{m-1} n_i(s)]\tilde{n}_m(s)\check{s} \tag{3.42}$$

and by comparing this to (3.35), dividing by $\check{s}$, setting $s = z_i$, and using (3.40b), we see that $a_1$ is non-zero. As for $b_o$, using Lemma 3.1 on (3.25) gives

$$A_1(s) = A_m(s)(-1)^{m-1} \sum [\text{principal minors order } m\text{-}1 \text{ of } G(s)]$$

$$= A_m(s)(-1)^{m-1} \sum \left( \prod_{i_1 \ldots i_{m-1}} \frac{n_j(s)}{d_j(s)} \right) \begin{pmatrix} \text{corresponding} \\ \text{principal} \\ \text{minor of } W(s) \end{pmatrix} \tag{3.43}$$

since all the non-principal minors of the Smith-MacMillan form are zero. However, since $n_m(z_i) = 0$,

$$b_o = A_1(z_i)$$

$$= A_m(z_i)(-1)^{m-1} \prod_{j=1}^{m-1} \frac{n_j(z_i)}{d_j(z_i)} \text{ DET} \begin{bmatrix} w_{11}(z_i) & \cdots & w_{1\,m-1}(z_i) \\ \vdots & & \vdots \\ w_{m-1\,1}(z_i) & \cdots & w_{m-1\,m-1}(z_i) \end{bmatrix} \tag{3.44}$$

and recalling (3.40b) and (3.41) shows that $b_o$ is non-zero if and only if (3.37b) holds. This proves Theorem 3.3.

In Section 3.4, we will obtain some alternative equations for the angles directly in terms of $G(s)$ and $G^{-1}(s)$.

### 3.3.2 Multiple Poles and Zeros

Before we investigate the angles of arrival and departure for multiple poles and zeros, some discussion will be necessary on exactly what is meant by a multiple pole or zero. This is not a trivial matter; in the multivariable case, it is possible for $G(s)$ to have a pole and a zero at the same location, or several poles and zeros of various orders all at the same location. We now make several definitions that will clarify matters and make the analyses to follow as straightforward as possible.

Definition The pole $p_i$ is a $k^{th}$-order pole if the exponent of $(s - p_i)$ in the pole polynomial of $G(s)$ is $k$.

Definition Let the Smith-MacMillan form of $G(s)$ be DIAG $[\frac{n_i(s)}{d_i(s)}]$, and let $p_i$ be a $k^{th}$-order pole. Let $k_j$ be the largest integer such that

$$(s - p_i)^{k_j} \mid d_j(s), \; j = 1 \ldots m. \tag{3.45}$$

Then the $\{k_j\}$ are the structure indices [12] associated with the pole $p_i$.

Analogous definitions are made for $k^{th}$-order zeros and structure indices of zeros. Note that $p_i$ may be a $k^{th}$-order pole and also a zero. Also note that $p_i$ may have one set of structure indices as a pole and

another set of structure indices as a zero.

Remarks (1) $\sum_{j=1}^{m} k_j = k$

(2) For a pole, $k_1 \geq k_2 \geq k_3 \geq \ldots \geq k_m$
For zero, the ordering is opposite

(3) For a first-order pole, the structure indices are $[1, 0, \ldots 0]$.

Example 3.: Suppose that G(s) has as its Smith-MacMillan form

$$\mathrm{DIAG}\left[\frac{1}{(s+2)^3(s+1)^2}, \frac{s-1}{(s+2)(s+1)^2}, \frac{(s-1)^2}{s+1}\right].$$

Then the structure indices are

Pole at -2: [3, 1, 0]
Pole at -1: [2, 2, 1]
Zero at 1: [0, 1, 2].

It should be noted that this definition of "structure indices" is not the same as the definition given by Verghese and Kailath in [12], although the definitions are closely related. The difference may be illustrated as follows. Let q be both a pole and a zero of G(s), with Verghese-Kailath structure indices $[\sigma_1, \sigma_2, \ldots \sigma_i, 0 \ldots 0, -\sigma_j, \ldots -\sigma_m]$. What we shall do here is separate the polar structure of q from its zero structure. From this point of view, the structure indices of G(s) at the pole of q are given by $[\sigma_1, \sigma_2, \ldots \sigma_i, 0 \ldots 0]$ and the structure indices of G(s) at the zero q are given by $[0 \ldots 0, \sigma_j, \ldots \sigma_m]$.

The motivation for doing this is that the polar nature of q has no effect on the angles of arrival at q, and the zero nature of q has no effect on the angles of departure at q. So we may consider q as consisting of a pole and a zero which just happen to be at the same location, but may

be treated separately.

Having defined terms and notations, we proceed now to investigate the angles of arrival and departure for multiple poles and zeros. The methodology and results employed in this section will be the same as those of the last section, to which extensive reference will be made. Once again, the angles of departure are treated first, and the angles of arrival later.

Let $p_i$ be a $k^{th}$-order pole with structure indices $[k_1, k_2, \ldots k_m]$. We require series approximations for all of the loci departing from $p_i$, and thus we must determine the form of the Newton polygon from the structure indices. As before, define

$$\tilde{s} = s - p_i \tag{3.46}$$

$$A_m(s) = A_m(\tilde{s} + p_i) = a_o + a_1\tilde{s} + a_2\tilde{s}^2 + \ldots \tag{3.47}$$

$$-A_{m-1}(s) = -A_{m-1}(\tilde{s} + p_i) = b_o + b_1\tilde{s} + b_2\tilde{s}^2 + \ldots \tag{3.48}$$

$$A_{m-2}(s) = A_{m-2}(\tilde{s} + p_i) = c_o + c_1\tilde{s} + c_2\tilde{s}^2 + \ldots \tag{3.49}$$

$$A_m(s) = (s - p_i)^k\tilde{A}_m(s),\ \tilde{A}_m(p_i) \neq 0. \tag{3.50}$$

From (3.50) and the same argument as used on (3.27),

$$a_o = a_1 = \ldots = a_{k-1} = 0,\ a_k \neq 0. \tag{3.51}$$

We define

$$d_j(s) = (s - p_i)^{k_j}\,\tilde{d}_j(s),\ \tilde{d}_j(p_i) \neq 0,\ j = 1 \ldots m \tag{3.52}$$

and recall (3.29) to write (corresponding to (3.31))

$$-A_{m-1}(s) = (s - p_i)^{(k-k_1)} \tilde{A}_m(s) \frac{n_1(s)}{\tilde{d}_1(s)} w_{11}(s)$$

$$+ \sum_{j=2}^{m} (s - p_i)^{(k-k_j)} \tilde{A}_m(s) \frac{n_j(s)}{\tilde{d}_j(s)} w_{jj}(s). \tag{3.53}$$

Comparing (3.53) to (3.48), dividing by increasing powers of $s$ and setting $s = p_i$ (a familiar procedure by now), we get

$$b_o = b_1 = \ldots = b_{k-k_1-1} = 0, \; b_{k-k_1} \neq 0 \tag{3.54}$$

where we have assumed (1) $w_{11}(p_i) \neq 0$, (2) $k_1 \neq k_2$. If $k_1 = k_2$, we require instead the assumption

$$b_{k-k_1} = \tilde{A}_m(p_i)\left(\frac{n_1(p_i)}{\tilde{d}_1(p_i)} w_{11}(p_i) + \frac{n_2(p_i)}{\tilde{d}_2(p_i)} w_{22}(p_i)\right) \neq 0 \tag{3.55}$$

which we would still expect to be true in general.

Now we must consider $A_{m-2}(s)$. Again using Lemma 3.1, we may generalize (3.43) to

$$A_p(s) = A_m(s)(-1)^{m-p} \sum [\text{principal minors order } m\text{-}p \text{ of } G(s)]$$

$$= A_m(s)(-1)^{m-p} \sum \left( \prod_{i_1 \ldots i_{m-p}} \frac{n_j(s)}{d_j(s)} \right) \begin{pmatrix} \text{corresponding} \\ \text{principal} \\ \text{minor of } W(s) \end{pmatrix},$$

$$p = 1 \ldots m. \tag{3.56}$$

Taking $p = m - 2$ and some reflection leads to

$$A_{m-2}(s) = (s - p_i)^{(k-k_1-k_2)} \tilde{A}_m(s) \frac{n_1(s)n_2(s)}{\tilde{d}_1(s)\tilde{d}_2(s)} \text{DET}\begin{bmatrix} w_{11}(p_i) & w_{12}(p_i) \\ w_{21}(p_i) & w_{22}(p_i) \end{bmatrix}$$

$$+ A_m(s) \sum \left( \prod_{i_1, i_2} \frac{n_j(s)}{d_j(s)} \right) \begin{pmatrix} \text{corresponding } 2 \times 2 \\ \text{principal minor of } W(s) \end{pmatrix} \tag{3.57}$$

(recall $k_1 \geq k_2 \geq k_3 \geq \ldots \geq k_m$). Since $n_1(s)$ and $d_1(s)$ are relatively prime, and $d_1(p_i)$ is zero, $n_1(p_i)$ is non-zero. A similar argument applies for $n_2(p_i)$ if $k_2$ is non-zero.

Comparing (3.57) to (3.49) and once again dividing by increasing powers of $\tilde{s}$ and setting $s = p_i$, we get

$$c_o = c_1 = \ldots = c_{k-k_1-k_2-1} = 0, \; c_{k-k_1-k_2} \neq 0 \tag{3.58}$$

where we have assumed $k_2 \neq k_3$ and

$$\mathrm{DET} \begin{bmatrix} w_{11}(p_i) & w_{12}(p_i) \\ w_{21}(p_i) & w_{22}(p_i) \end{bmatrix} \neq 0. \tag{3.59}$$

If $k_2 = k_3$ we must satisfy instead an equation analogous to (3.55).

We may repeat this argument for $p = m-3, m-4, \ldots$ , and obtain more equations analogous to (3.51), (3.54), and (3.58), with analogous assumptions. The Newton polygon will take the form given in Fig. 3.3, and we can now prove the following theorem:

<u>Theorem 3.4</u> The loci departing from a $k^{th}$-order pole depart generically in Butterworth patterns whose orders are the non-zero structure indices of G(s) at the pole. For a pole $p_i$ with non-zero structure indices $[k_1, k_2, \ldots k_r]$ the angles of departure are:

$$\theta_{\text{depart, 1}} = \frac{1}{k_1} \mathrm{ARG} \left[ \frac{\dfrac{d^{(k-k_1)}}{ds^{(k-k_1)}} A_{m-1}(s)}{\dfrac{d^{(k)}}{ds^{(k)}} A_m(s)} \Big|_{s = p_i} \right]$$

$$+ \frac{n360°}{k_1}, \; n = 0, 1, \ldots k_1 - 1 \tag{3.60a}$$

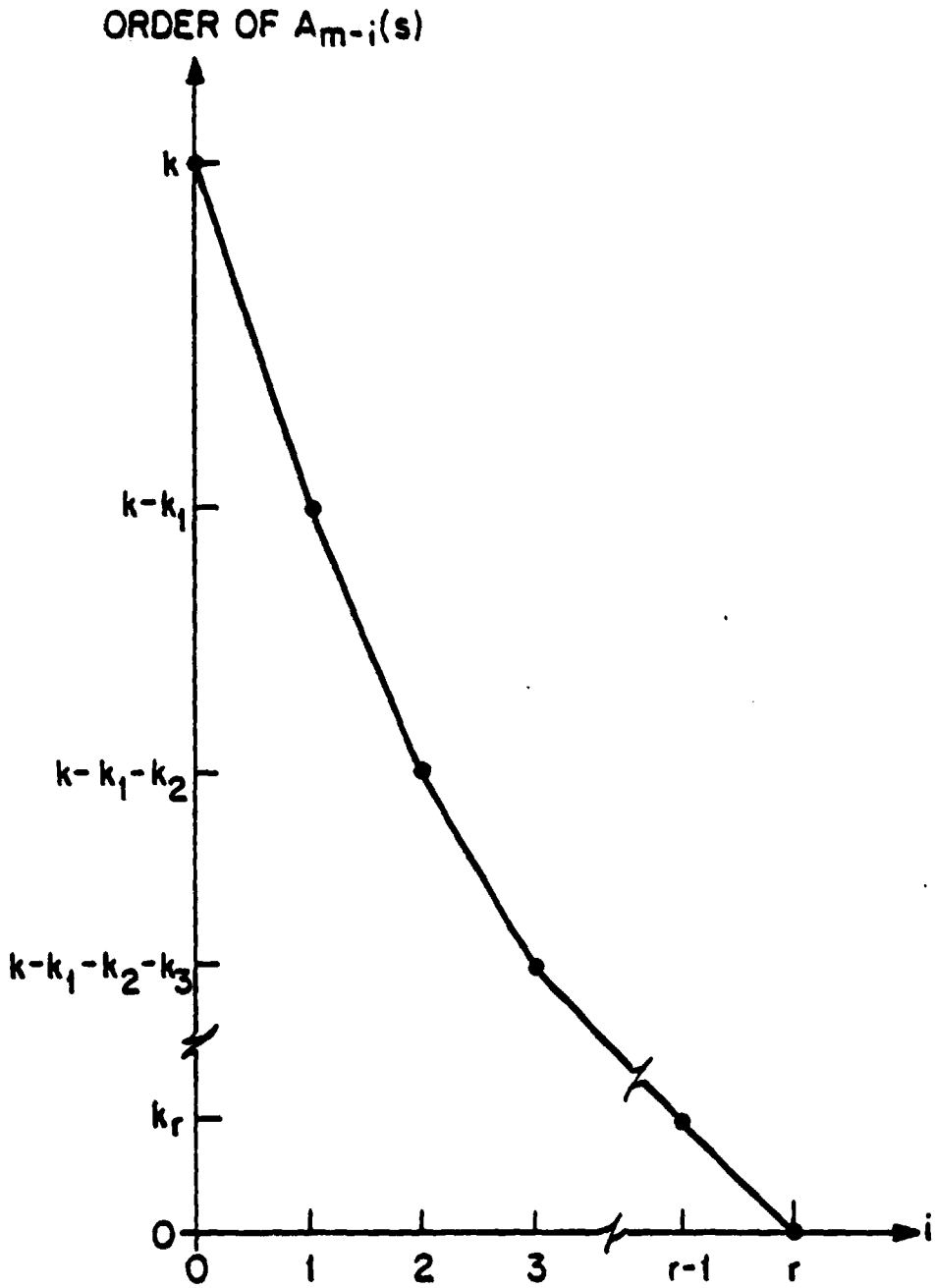


Figure 3.3

Newton Polygon for the Generic Case

of Higher-Order Angles of Departure

$$\theta_{\text{depart},\,2} = \frac{1}{k_2}\,\text{ARG}\left[\frac{\dfrac{d^{(k-k_1-k_2)}}{ds^{(k-k_1-k_2)}}A_{m-2}(s)}{\dfrac{d^{(k-k_1)}}{ds^{(k-k_1)}}A_{m-1}(s)}\;\Big|\; s = p_j\right]$$

$$\vdots \qquad + \frac{n360^\circ}{k_2}\,,\ n=0,\ 1,\ \ldots\ k_2 - 1 \qquad \vdots \tag{3.60b}$$

$$\theta_{\text{depart},\,r} = \frac{1}{k_r}\,\text{ARG}\left[\frac{A_{m-r}(s)}{\dfrac{d^{(k_r)}}{ds^{(k_r)}}A_{m-r+1}(s)}\;\Big|\; s = p_i\right]$$

$$+ \frac{n360^\circ}{k_r}\,,\ n = 0,\ 1,\ \ldots\ k_r-1 \tag{3.60c}$$

if the following assumptions are met:

$$(1)\quad k_1 \neq k_2 \neq \ldots \neq k_r \tag{3.61a}$$

$$(2)\quad \text{DET}\begin{bmatrix} w_{11}(p_i) & \ldots & w_{1j}(p_i) \\ \vdots & & \vdots \\ w_{j1}(p_i) & \ldots & w_{jj}(p_i) \end{bmatrix} \neq 0,\ j = 1\ \ldots\ r\,. \tag{3.61b}$$

We prove Theorem 3.4 by applying the Newton polygon technique. Since the $k_i$ are ordered, the polygonal arc drawn in Fig. 3.3 is convex, and is indeed the Newton polygon. If the $k_i$ are unequal, we may write

$$k \approx c_i \xi^{k_i},\ i = 1\ \ldots\ r,\ \text{as}\ (\xi,k) \to (0,0) \tag{3.62}$$

where the $c_i$ solve

$$c_i^{i-1}\beta_{i-1} + c_i^{i}\beta_i = 0 \tag{3.63}$$

where $\beta_i$ is defined as

$$A_{m-i}(s) = \beta_i \tilde{s}^{(k-k_1-\ldots-k_i)} + \ldots , \; i = 1 \ldots r \tag{3.64}$$

(note $\beta_o = a_k$, $\beta_1 = b_{k-k_1}$, and $\beta_2 = c_{k-k_1-k_2}$). From (3.62) and (3.63), we get

$$\tilde{s} = x_i k^{1/k_i}, \; i = 1 \ldots r \tag{3.65}$$

where $x_i$ solves

$$x_i^{k_i} = -\frac{\beta_i}{\beta_{i-1}}, \; i = 1 \ldots r. \tag{3.66}$$

The $k_i$ solutions to (3.66) are equally spaced in the complex plane by angles of $(360/k_i)°$; hence their angles are those of a Butterworth pattern. This fact with (3.65) proves that the departing loci form Butterworth patterns. Applying the definition of angle of a locus to (3.65) and noting that

$$\beta_i = \frac{1}{(k - k_1 - \ldots - k_i)!} \frac{d^{(k - k_1 - \ldots - k_i)}}{ds^{(k - k_1 - \ldots - k_i)}} A_{m-i}(s) \Big|_{s = p_i} \tag{3.67}$$

yields (3.60a, b, c) and concludes the proof of Theorem 3.4.

Note that if any two non-zero $k_i$ are equal then three points in Fig. 3.3 will be collinear, and (3.63) will be replaced by an equation of the form

$$c_i^{i-1} \beta_{i-1} + c_i^{i} \beta_i + c_i^{i+1} \beta_{i+1} = 0 \tag{3.68}$$

which is now quadratic in $c_i$. In this case, we get two Butterworth patterns of order $k_i$ with different principal angles, whose computation from the

$A_i(s)$ is now much more difficult.

As for the angles of arrival at a multiple finite zero, we may use a procedure analogous to that used for the angles of departure to obtain an analogous result. The groundwork was laid in the last section for first-order zeros; the only difference is that we now use $p = 1, 2, \ldots r$ in (3.56) rather than $p = m - 1, m - 2, \ldots m - r$. The result is

<u>Theorem 3.5</u> The loci arriving at a $k^{th}$-order zero arrive generically in Butterworth patterns whose orders are the non-zero structure indices of $G(s)$ at the zero. For a zero $z_i$ with non-zero structure indices $[k_m, k_{m-1}, \ldots k_{m-r}]$ the angles of arrival are:

$$\theta_{arrival,1} = \frac{1}{k_m} \mathrm{ARG} \left[ - \frac{\dfrac{d^{(k-k_m)}}{ds^{(k-k_m)}} A_1(s)}{\dfrac{d^{(k)}}{ds^{(k)}} A_o(s)} \Big|_{s = z_i} \right] + \frac{n360°}{k_m}, \; n = 0, 1, \ldots k_m - 1 \tag{3.69a}$$

$$\vdots$$

$$\theta_{arrival,\, r+1} = \frac{1}{k_{m-r}} \mathrm{ARG} \left[ - \frac{A_{r+1}(s)}{\dfrac{d^{(k_{m-r})}}{ds^{(k_{m-r})}} A_r(s)} \Big|_{s = z_i} \right] + \frac{n360°}{k_{m-r}}, \; n = 0, 1, \ldots k_{m-r} - 1 \tag{3.69b}$$

if the following assumptions are met:

(1) $k_m \neq k_{m-1} \neq \ldots \neq k_{m-r}$ (3.70)

(2) $$\mathrm{DET} \begin{bmatrix} w_{11}(p_i) & \ldots & w_{1j}(p_i) \\ \vdots & & \vdots \\ w_{j1}(p_i) & \ldots & w_{jj}(p_i) \end{bmatrix} \neq 0, \; j = m-1, m-2. \ldots m-r-1. \tag{3.71}$$

(For notational convenience, we let r be one less than the number of non-zero indices.)

It is unfortunate that the assumptions (3.51b) and (3.71) are so difficult to verify, depending as they do on the unimodular matrices U(s) and V(s) that bring G(s) to the Smith-MacMillan form. Except for one note in the next section, it has not been possible to interpret these conditions or come up with easier ways to determine whether or not they are fulfilled. In any case, it is felt that the results of this section cast considerable light on the angles of root loci departing from or arriving at multiple poles or zeros.

We end this section with an illustrative example:

Example 3.2 We wish to find the angles of arrival and departure for the root locus of

$$G(s) = \frac{1}{s^4 + 4s^3 + 8s^2 + 8s + 4} \times \begin{bmatrix} s^2 + 8s + 17 & s^3 + 10s^2 + 33s + 34 \\ s^3 + 9s^2 + 25s + 17 & 2s^4 + 21s^3 + 78s^2 + 117s + 68 \end{bmatrix}.$$

We have

$$\Delta(g,s) = g^2 - \mathrm{TR}\, G(s) + \mathrm{DET}\, G(s) = 0$$

and it is straightforward to compute $\Delta(g,s)$ and multiply through by the least common denominator to get

$$\begin{aligned}\Phi(g,s) = {} & (s^6 + 6s^5 + 18s^4 + 32s^3 + 36s^2 + 24s + 8)g^2 \\ & - (2s^6 + 25s^5 + 125s^4 + 325s^3 + 493s^2 + 420s + 170)g \\ & + (s^4 + 16s^3 + 98s^2 + 272s + 289) = 0.\end{aligned}$$

The open-loop poles are found by solving

$$A_2(s) = s^6 + 6s^5 + 18s^4 + 32s^3 + 36s^2 + 24s + 8 = 0$$

which yields the third-order poles $-1 + j$ and $-1 - j$. The finite zeros are found by solving

$$A_o(s) = s^4 + 16s^3 + 98s^2 + 272s + 289 = 0$$

which yields the second-order zeros $-4 + j$ and $-4 - j$. The structure indices may be found by constructing the Smith-MacMillan form of G(s) (another method will be described later):

$$G(s) = \begin{bmatrix} 1 & 0 \\ s+1 & 1 \end{bmatrix} \begin{bmatrix} \dfrac{s^2 + 8s + 17}{s^4 + 4s^3 + 8s^2 + 8s + 4} & 0 \\ 0 & \dfrac{s^2 + 8s + 17}{s^2 + 2s + 2} \end{bmatrix}$$

$$\cdot \times \begin{bmatrix} 1 & s+2 \\ 0 & 1 \end{bmatrix}$$

from which we see that the structure indices for the poles $-1 \pm j$ are [2, 1], and those for the zeros $-4 \pm j$ are [1, 1]. Since we have U(s) and V(s), we may quickly confirm that the W(s) assumptions are upheld.

Thus loci depart from the pole $-1 + j$ in some second-order and first-order Butterworth patterns with angles

$$\theta_{\text{depart},\,1} = \frac{1}{2}\,\text{ARG}\left[\frac{\frac{d}{ds}A_1(s)}{\frac{d^{(3)}}{ds^{(3)}}A_2(s)}\Bigg|_{s=p_i}\right] + n180°,\ n = 0, 1$$

$$= \frac{1}{2}\,\text{ARG}\left[-\frac{12s^5 + 125s^4 + 500s^3 + 975s^2 + 986s + 420}{120s^3 + 360s^2 + 432s + 192}\Bigg|_{s=-1+j}\right]$$

$$= 61.8°,\ 241.8°$$

and angle

$$\theta_{\text{depart},\,2} = \text{ARG}\left[\frac{A_o(s)}{\frac{d}{ds}A_1(s)}\Bigg|_{s=p_i}\right]$$

$$= \text{ARG}\left[-\frac{s^4 + 16s^3 + 98s^2 + 272s + 289}{12s^5 + 125s^4 + 500s^3 + 975s^2 + 986s + 420}\Bigg|_{s=-1+j}\right]$$

$$= 33.7°.$$

By symmetry, the angles of departure from the pole $-1 - j$ will be $-61.8°$, $118.2°$, and $-33.7°$.

We know that the loci will arrive at the finite zero $-4 + j$ in two first-order Butterworth patterns, but since the structure indices are equal, the computation of the angles of arrival would be much more difficult, and is not attempted here.

## 3.4 Results from Laurent Series

We now use a different methodology to come up with much simpler equations for the case of first-order and certain higher-order poles and zeros. These turn out to be nice generalizations of the SISO equations.

Let $p_i$ be a first-order pole of $G(s)$, and let the Laurent expansion of $G(s)$ at $p_i$ be

$$G(s) = \frac{1}{s - p_i} G_{-1} + G_o + (s - p_i)G_1 + (s - p_i)^2 G_2 + \dots \tag{3.72}$$

Then taking the trace of both sides, we have

$$\text{TR } G(s) = \frac{1}{s - p_i} \text{TR } G_{-1} + \text{TR } G_o + (s - p_i) \text{ TR } G_1 + \dots \tag{3.73}$$

Recall (3.16-18):

$$\check{s} = s - p_i \tag{3.74}$$

$$A_m(s) = A_m(\check{s} + p_i) = a_1\check{s} + a_2\check{s}^2 + \dots \tag{3.75}$$

$$-A_{m-1}(s) = -A_{m-1}(\check{s} + p_i) = b_o + b_1\check{s} + b_2\check{s}^2 + \dots \tag{3.76}$$

Now multiply (3.75) and (3.73):

$$\begin{aligned} -A_{m-1}(s) &= A_m(s) \text{ TR } G(s) \\ &= (a_1 \text{ TR } G_{-1}) + \check{s}(a_1 \text{ TR } G_o + a_2 \text{ TR } G_{-1}) + \dots \end{aligned} \tag{3.77}$$

Equate coefficients of (3.76) and (3.77):

$$b_o = a_1 \text{ TR } G_{-1}. \tag{3.78}$$

We know from (3.28) that $a_1$ is non-zero, and recalling (3.22),

$$\theta_{\text{depart}} = \text{ARG } [-\frac{b_o}{a_1}] \tag{3.79}$$

we have proved Theorem 3.6:

<u>Theorem 3.6</u> Let the Laurent expansion of G(s) at a first-order pole $p_i$ be (3.72). Then, if TR $G_{-1} \neq 0$, the angle of departure from $p_i$ is

$$\theta_{\text{depart}} = \text{ARG } [-\text{TR } G_{-1}] = \text{ARG } [-(s - p_i) \text{ TR } G(s)|_{s=p_i}]. \tag{3.80}$$

Simple as this result is, it is a striking generalization of the SISO root locus equation (2.32) for computing the angle of departure. The only difference is that in (3.80) the <u>trace</u> of the transfer function matrix is used, whereas in (2.32) the (scalar) transfer function itself is used.

The condition TR $G_{-1} \neq 0$ will hold in general; in fact, it is easy to show that TR $G_{-1} \neq 0$ if and only if $w_{11}(p_i) \neq 0$, which is the condition that is needed in Theorem 3.2 in order to use (3.26) to compute the angle of departure from the $A_i(s)$. Recall the Smith-MacMillan form of G(s)

$$G(s) = U(s) \text{ DIAG}\left[\frac{n_1(s)}{d_1(s)} \cdots \frac{n_m(s)}{d_m(s)}\right] V(s) \tag{3.81}$$

and use (3.30b) (properties of the $d_i(s)$) to show that

$$\begin{aligned} G_{-1} &= (s - p_i)G(s)|_{s = p_i} \\ &= U(p_i) \text{ DIAG}\left[\frac{n_1(p_i)}{\dot{d}_1(p_i)}, 0 \ldots 0\right] V(p_i). \end{aligned} \tag{3.82}$$

Then using the commutative property of the trace, one has

$$\mathrm{TR}\ G_{-1} = \mathrm{TR}\left[\mathrm{DIAG}\left[\frac{n_1(p_i)}{\tilde{d}_1(p_i)},\ 0\ \ldots\ 0\right] V(p_i)U(p_i)\right]$$

$$= \frac{n_1(p_i)}{\tilde{d}_1(p_i)}\, w_{11}(p_i) \tag{3.83}$$

and the result follows.

In the unusual case where TR $G_{-1}$ is zero, something rather interesting happens. We now state and prove

<u>Theorem 3.7</u> Let the Laurent expansion of G(s) at a first-order pole $p_i$ be (3.72). Then if

$$(1)\quad \mathrm{TR}\ G_{-1} = 0 \tag{3.84}$$

$$(2)\quad \mathrm{TR}\ [G_{-1}\ G_o] \neq 0 \tag{3.85}$$

the angle of departure from $p_i$ is

$$\theta_{\mathrm{depart}} = \mathrm{ARG}\left[\mathrm{TR}\ [G_{-1}\ G_o]\right] \tag{3.86}$$

and the locus departs as $k^2$ (a $\frac{1}{2}$-order departure).

If TR $G_{-1}$ is zero, $b_o$ is zero, and the Newton polygon for this situation, given in Fig. 3.4, shows that we must consider

$$A_{m-2}(s) = A_m(s) \sum \begin{pmatrix}\text{principal minors}\\ \text{order 2 of } G(s)\end{pmatrix}. \tag{3.87}$$

Recalling the Laurent expansion of G(s), we see that

$$\sum \begin{pmatrix}\text{principal minors}\\ \text{order 2 of } G(s)\end{pmatrix} = \frac{1}{(s - p_i)^2} \sum \begin{pmatrix}\text{principal minors}\\ \text{order 2 of } G_{-1}\end{pmatrix}$$

$$+ \frac{1}{s - p_i} \sum \begin{pmatrix}\text{principal minors with one column}\\ \text{from } G_{-1} \text{ and one column from } G_o\end{pmatrix} + \ldots \tag{3.88}$$

and the first term must be zero, or $p_i$ would be a second-order pole. Denote the elements of $G_{-1}$ and $G_o$ as

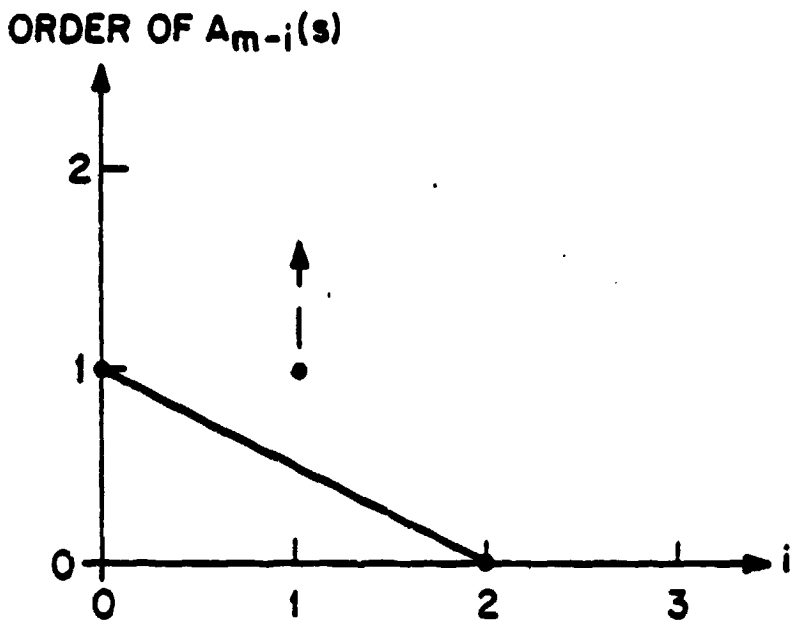


Figure 3.4

Newton Polygon for the Case of TR $G_{-1} = 0$

for First-Order Angles of Departure

$$G_{-1} = [g_{ij}^{-1}],\ G_o = [g_{ij}^{0}] \tag{3.89}$$

and observe that

$$\sum \begin{pmatrix} \text{principal minors with one column} \\ \text{from } G_{-1} \text{ and one column from } G_o \end{pmatrix}$$

$$= \sum_{i=1}^{m} \sum_{j=1}^{m} \left( g_{ii}^{-1}\, g_{jj}^{0} - g_{ji}^{-1}\, g_{ij}^{0} \right) = \sum_{i=1}^{m} g_{ii}^{-1} \sum_{j=1}^{m} g_{jj}^{0} - \sum_{j=1}^{m} \left( \sum_{i=1}^{m} g_{ji}^{-1}\, g_{ij}^{0} \right)$$

$$= (\mathrm{TR}\ G_{-1})(\mathrm{TR}\ G_o) - \mathrm{TR}\ [G_{-1}\ G_o] = -\mathrm{TR}\ [G_{-1}\ G_o]. \tag{3.90}$$

Multiplying (3.88) by the polynomial for $A_m(s)$ (3.75) and using (3.87) and (3.90), we get

$$A_{m-2}(s) = -a_1\ \mathrm{TR}\ [G_{-1}\ G_o] + \check{s}(-a_2\ \mathrm{TR}\ [G_{-1}\ G_o] + \ldots\ ) \tag{3.91}$$

so that if $\mathrm{TR}\ [G_{-1}\ G_o]$ is non-zero, the Newton polygon will be as in Fig. 3.4. We then have

$$k \cong c\check{s}^{\frac{1}{2}} \tag{3.92}$$

where c solves

$$a_1 - a_1 c^2\ \mathrm{TR}\ [G_{-1}\ G_o] = 0. \tag{3.93}$$

Since $a_1$ is known to be non-zero from (3.28), we have

$$\check{s} \cong \mathrm{TR}\ [G_{-1}\ G_o] k^2 \tag{3.94}$$

and the theorem follows.

Unfortunately, the Laurent series methodology does not lend itself well to the case of multiple poles. In general, the results from the Smith-MacMillan form must be used. However, for a certain class of

multiple poles, the following result applies:

<u>Definition</u> A $k^{th}$-order pole is said to be <u>simple</u> if its structure indices are $[k, 0 \ldots 0]$.

<u>Theorem 3.8</u> Let the Laurent expansion of $G(s)$ at a $k^{th}$-order pole $p_i$ be

$$G(s) = \frac{1}{(s - p_i)^k} G_{-k} + \ldots + \frac{1}{(s - p_i)} G_{-1} + G_o + \ldots \tag{3.95}$$

Then if $TR\ G_{-k} \neq 0$, the pole is <u>simple</u> and the angles of departure from $p_i$ are

$$\begin{aligned} \theta_{depart} &= \frac{1}{k} ARG\ [-TR\ G_{-k}] + \frac{n360°}{k},\ n = 0, 1, \ldots k - 1 \\ &= \frac{1}{k} ARG\ [-(s - p_i)^k\ TR\ G(s)\ |_{s = p_i}] \\ &\quad + \frac{n360°}{k},\ n = 0, 1, \ldots k - 1. \end{aligned} \tag{3.96}$$

The proof of Theorem 3.8 follows that of Theorem 3.6. Recalling (3.51) for a $k^{th}$-order pole we have that

$$a_o = a_1 = \ldots = a_{k-1} = 0,\ a_k \neq 0. \tag{3.97}$$

Taking the trace of (3.95) and multiplying by $A_m(s)$, we get

$$\begin{aligned} -A_{m-1}(s) &= A_m(s)\ TR\ G(s) \\ &= (a_k\ TR\ G_{-k}) + s(a_{k+1}\ TR\ G_{-k} + a_k\ TR\ G_{-k+1}) + \ldots \end{aligned} \tag{3.98}$$

Equating coefficients with (3.76) gives

$$b_o = a_k\ TR\ G_{-k}. \tag{3.99}$$

Now, if $TR\ G_{-k}$ is non-zero, $b_o$ is non-zero, and the Newton polygon will look like Fig. 3.5. Comparing Fig. 3.5 with Fig. 3.3 shows that $p_i$ must be

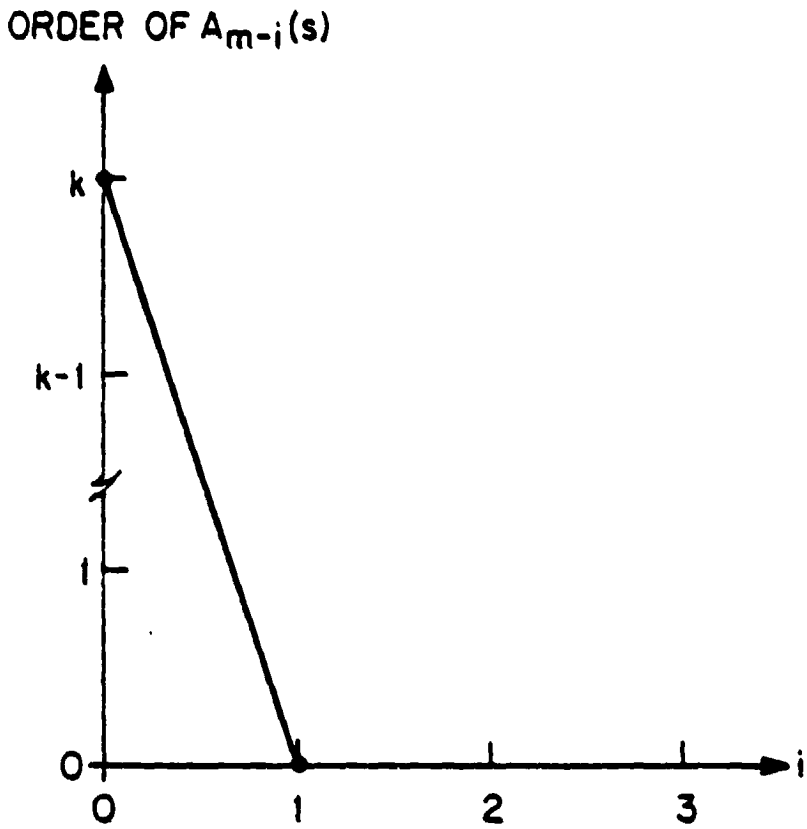


Figure 3.5

Newton Polygon for the Generic Case

of a Simple Higher-Order Pole

simple. We have

$$\theta_{\text{depart}} = \text{ARG}\,[x] \tag{3.100}$$

where x solves

$$x^k = -\frac{b_o}{a_k} = -\text{TR}\,G_{-k} \tag{3.101}$$

as before (see (3.64-66)). (3.100) and the k solutions to (3.101) yield (3.96), and the theorem is proved.

If TR $G_{-k}$ is zero, $p_i$ is not a simple pole and we must go back to the Smith-MacMillan form results. The reason that the SISO angle of departure equation (2.32) does not always generalize to (3.96) is that in the SISO case <u>all</u> higher-order poles are necessarily simple, while in the multivariable case only <u>some</u> are.

The Laurent series methodology might at first seem inapplicable to the computation of angles of arrival, since these depend on the sum of principal minors of order m - 1 of G(s), which, unlike the trace, is not a linear function. However, recall that

$$G^{-1}(s) = \frac{\text{ADJ}\,G(s)}{\text{DET}\,G(s)} \tag{3.102}$$

where ADJ G(s) is the transpose of the matrix of cofactors of G(s). So the main diagonal elements of $G^{-1}(s)$ are principal minors of order m - 1 of G(s) divided by DET G(s), and we have

$$\begin{aligned} A_1(s) &= A_m(s)\sum\begin{pmatrix}\text{principal minors of}\\ \text{order } m-1 \text{ of } G(s)\end{pmatrix}(-1)^{m-1} \\ &= A_m(s)\ \text{DET}\,G(s)\ \sum\left(\text{main diagonal elements of } G^{-1}(s)\right)(-1)^{m-1} \\ &= -A_o(s)\ \text{TR}\,G^{-1}(s). \end{aligned} \tag{3.103}$$

We once again define, for a $k^{th}$-order finite zero $z_i$,

$$\check{s} = s - z_i \tag{3.104}$$

$$A_o(s) = A_o(\check{s} + z_i) = a_o + a_1\check{s} + a_2\check{s}^2 + \ldots \tag{3.105}$$

$$A_1(s) = A_1(\check{s} + z_i) = b_o + b_1\check{s} + b_2\check{s}^2 + \ldots \tag{3.106}$$

where we know (see (3.39-42))

$$a_o = a_1 = \ldots = a_{k-1} = 0,\ a_k \neq 0\,. \tag{3.107}$$

Since $z_i$ is a $k^{th}$-order zero of $G(s)$, it is a $k^{th}$-order pole of $G^{-1}(s)$, and we may write a Laurent expansion

$$G^{-1}(s) = \frac{1}{(s - z_i)^k} H_{-k} + \ldots + \frac{1}{(s - z_i)} H_{-1} + H_o + \ldots \tag{3.108}$$

Taking the trace of (3.108), multiplying by (3.105), using (3.107), and equating coefficients with (3.106), we get

$$b_o = -a_k \text{ TR } H_{-k} \tag{3.109}$$

and following (3.99-101), we have proved

<u>Theorem 3.9</u> Let $z_i$ be a $k^{th}$-order zero of $G(s)$. Then if TR $H_{-k} \neq 0$, where $H_{-k}$ is defined by (3.108), the angles of arrival at $z_i$ are

$$\theta_{\text{arrival}} = \frac{1}{k} \text{ ARG } [(s - z_i)^k \text{ TR } G^{-1}(s) \,|_{s = z_i}] + \frac{n360°}{k},$$
$$n = 0, 1, \ldots k - 1. \tag{3.110}$$

As with the angles of departure, TR $H_{-k}$ being non-zero corresponds to $z_i$ being a <u>simple</u> zero. If $z_i$ is non-simple, the Smith-MacMillan form results must be used.

We can simplify (3.110) for the case of 2 x 2 G(s), by noting that in this case we have

$$\mathrm{TR}\ G^{-1}(s) = \frac{\mathrm{TR}\ G(s)}{\mathrm{DET}\ G(s)} \tag{3.111}$$

so that (3.110) becomes

$$\theta_{\text{arrival}} = \frac{1}{k}\,\mathrm{ARG}\left[\frac{(s - z_i)^k\ \mathrm{TR}\ G(s)}{\mathrm{DET}\ G(s)}\Big|_{s = z_i}\right] + \frac{n360°}{k},$$

$$n = 0, 1, \ldots k - 1. \tag{3.112}$$

We conclude this section with a simple example:

<u>Example 3.3</u> [3] We wish to find the angles of arrival and departure for

$$G(s) = \frac{1}{s^4 + 5s^3 - 2s^2 - 44s + 40} \times \begin{bmatrix} 3s^3 + 4s^2 - 156s + 464 & 8s^2 - 24s + 16 \\ s^3 + 79s^2 + 44s - 868 & -4s^3 - 4s^2 + 40s - 32 \end{bmatrix}$$

From the characteristic equation (or other means), it is ascertained that G(s) has first-order poles at 1, 2, -4 + 2j, and -4 - 2j, and first-order finite zeros at 1 + j and 1 - j. Using Theorem 3.6, we have

<u>Pole at s = 1</u>

$$\theta_{\text{depart}} = \mathrm{ARG}\ [-(s - 1)\ \mathrm{TR}\ G(s)\ |_{s = 1}]$$

$$= \mathrm{ARG}\left[\frac{s^3 + 116s - 432}{(s - 2)(s + 4 + 2j)(s + 4 - 2j)}\ \Big|_{s = 1}\right] = 0°$$

<u>Pole at s = 2</u>

$$\theta_{\text{depart}} = \mathrm{ARG}\left[\frac{s^3 + 116s - 432}{(s - 1)(s + 4 + 2j)(s + 4 - 2j)}\ \Big|_{s = 2}\right]$$

$$= 180°$$

Pole at $s = -4 + 2j$

$$\theta_{depart} = \mathrm{ARG}\left[\frac{s^3 + 116s - 432}{(s-1)(s-2)(s+4+2j)}\Big|_{s=-4+2j}\right]$$

$$= 110.9^\circ$$

Pole at $s = -4 - 2j$

$\theta_{depart} = -110.9^\circ$ by symmetry.

Using Theorem 3.9 and (3.112), we have

Zero at $s = 1 + j$

$$\theta_{arrival} = \mathrm{ARG}\left[\frac{(s-1-j)\ \mathrm{TR}\ G(s)}{\mathrm{DET}\ G(s)}\Big|_{s=1+j}\right]$$

$$= \mathrm{ARG}\left[(s-1-j)\frac{s^3 + 116s - 432}{12(s^2 - 2s + 2)}\Big|_{s=1+j}\right] = 69.6^\circ$$

Zero at $s = 1 - j$

$\theta_{arrival} = -69.6^\circ$ by symmetry.

These results agree with those of Postlethwaite [3], from which this example is taken.

## 3.5 Results from Toeplitz Matrices

We now take the Laurent series coefficients from the last section and arrange them into Toeplitz matrices from which the angles of arrival and departure can be obtained. We also relate these results to the preceding results, showing how all of these results relate to each other. The results that follow are due to Sastry and Desoer [17] and Levy [19].

Definition A matrix A has simple null structure if, in the Jordan form of A, the zero eigenvalues are all contained in Jordan blocks of order one.

Note that if a matrix has simple null structure, then its rank

is equal to the number of non-zero eigenvalues.

<u>Theorem 3.10</u> Let the Laurent series expansion of $G(s)$ at an $n^{th}$-order pole $p_i$ be

$$G(s) = \frac{1}{(s - p_i)^n} G_{-n} + \ldots + \frac{1}{(s - p_i)} G_{-1} + G_o + \ldots \tag{3.113}$$

Then the angles of departure are given by

$$\theta_{depart} = \frac{1}{a} \text{ARG } [-\lambda_a] + \frac{j360°}{a}, \; j = 0, 1, \ldots a - 1$$

$$a = 1, 2, \ldots n \tag{3.114}$$

where $\lambda_a$ is a non-zero solution to

$$\text{DET} \begin{bmatrix} G_{-n} & 0 & & & 0 \\ \vdots & & & & \\ G_{-(a+2)} & \vdots & 0 & & \\ G_{-(a+1)} & G_{-(a+2)} & \cdots & & 0 \\ (G_{-a} - \lambda_a I) & G_{-(a+1)} & G_{-(a+2)} & \cdots & G_{-n} \end{bmatrix} = 0 \tag{3.115}$$

provided this is an equation in $\lambda_a$, and certain matrices $\tilde{G}_i$ obtained from the $G_i$ by a procedure given in [17] have simple null structure.

Theorem 3.10 is proved as follows. By making the substitution $g = -\frac{1}{k}$ in the characteristic equation, we have the following equation describing the root locus:

$$\text{DET } [I + kG(s)] = 0. \tag{3.116}$$

This is equivalent to stating that there exists a non-zero m-vector $v(s)$ such that

$$(I + kG(s))v(s) = 0. \tag{3.117}$$

In the vicinity of a pole, where $s - p_i$ is near zero, we may expand $v(s)$ in a power series

$$v(s) = v_o + v_1(s - p_i) + v_2(s - p_i)^2 + \dots \tag{3.118}$$

with $v_o$ non-zero.

We now make use of the fact that if the $\tilde{G}_i$ all have simple null structure, all loci departing from $p_i$ depart in integer orders, i.e. as $k^{1/a}$ where a is a positive integer. This is proved in Sastry and Desoer [17] for the case of asymptotes of root loci, and a similar argument applies for the angles of departure. So we may write

$$\tilde{s} = s - p_i \tag{3.119}$$

$$\tilde{s} = x_a k^{1/a}, \; a = 1 \dots n \tag{3.120}$$

for some constants $x_a$.

First, let $a = n$. Substituting (3.113), (3.118), (3.119), and (3.120) in (3.117), we get

$$(v_o + v_1\tilde{s} + \dots) + \frac{\tilde{s}^n}{x_n^n}\left(\frac{1}{\tilde{s}^n} G_{-n} + \frac{1}{\tilde{s}^{n-1}} G_{-n+1} + \dots\right)(v_o + v_1\tilde{s} + \dots)$$
$$= 0. \tag{3.121}$$

Letting $\tilde{s} \to 0$ for the angles of departure, we require the constant term of (3.121) to be zero:

$$v_o + \frac{1}{x_n^n} G_{-n} v_o = \left(I + \frac{1}{x_n^n} G_{-n}\right) v_o = 0. \tag{3.122}$$

Now let $a = n - 1$. This gives

$$(v_o + v_1\tilde{s} + \dots) + \frac{\tilde{s}^{n-1}}{x_{n-1}^{n-1}}\left(\frac{1}{\tilde{s}^n} G_{-n} + \frac{1}{\tilde{s}^{n-1}} G_{-n+1} + \dots\right)(v_o + v_1\tilde{s} + \dots)$$

$$= 0 \tag{3.123}$$

and we require both the constant term to be zero

$$v_o + \frac{1}{x_{n-1}^{n-1}} G_{-n+1}v_o + \frac{1}{x_{n-1}^{n-1}} G_{-n}v_1 = (I + \frac{1}{x_{n-1}^{n-1}} G_{-n+1})v_o + \frac{1}{x_{n-1}^{n-1}} G_{-n}v_1$$

$$= 0 \tag{3.124}$$

and the term of order $\tilde{s}^{-1}$ to be zero

$$\frac{1}{x_{n-1}^{n-1}} G_{-n}v_o = 0. \tag{3.125}$$

We may combine (3.124) and (3.125) into

$$\begin{bmatrix} G_{-n} & 0 \\ (G_{-n+1} + x_{n-1}^{n-1}I) & G_{-n} \end{bmatrix} \begin{bmatrix} v_o \\ v_1 \end{bmatrix} = 0. \tag{3.126}$$

But $v_o$ must be non-zero, which can only happen if $x_{n-1}$ is such that

$$\text{DET} \begin{bmatrix} G_{-n} & 0 \\ (G_{-n+1} + x_{n-1}^{n-1}I) & G_{-n} \end{bmatrix} = 0. \tag{3.127}$$

There are two possibilities. Either there is no such $x_{n-1}$, in which case there can be no loci departing as $k^{1/(n-1)}$, or there are n - 1 such $x_{n-1}$, specifically the n - 1 solutions to

$$x_{n-1}^{n-1} = -\lambda \tag{3.128}$$

where $\lambda$ solves

$$\mathrm{DET}\begin{bmatrix} G_{-n} & 0 \\ (G_{-n+1} - \lambda I) & G_{-n} \end{bmatrix} = 0. \tag{3.129}$$

It is immediately evident that the solutions to (3.128), when substituted back in (3.120), will give rise to an $(n - 1)^{th}$-order Butterworth pattern. Continuing the argument for $a = n - 2, \ldots 2, 1$, it is clear that the pattern of (3.122) and (3.127) will continue, giving rise to (3.115). This concludes the proof.

For the angles of arrival, we have

<u>Theorem 3.11</u> Let the Laurent series expansion of $G(s)$ at an $n^{th}$-order zero $z_i$ be

$$G(s) = G_o + (s - z_i)G_1 + (s - z_i)^2 G_2 + \ldots \tag{3.130}$$

and let the $\tilde{G}_i$ (again, see [17]) all have simple null structure. Then the angles of arrival are given by

$$\theta_{\text{arrival}} = -\frac{1}{a}\,\mathrm{ARG}\,[-\lambda_a] + \frac{j360°}{a}, \quad j = 0, 1, \ldots a - 1$$

$$a = 1, 2, \ldots n \tag{3.131}$$

where $\lambda_a$ is a non-zero solution to

$$\mathrm{DET}\begin{bmatrix} G_1 & 0 & & & 0 \\ \vdots & & & & \\ G_{a-2} & \vdots & 0 & & \\ G_{a-1} & G_{a-2} & \cdots & & 0 \\ (G_a - \lambda_a I) & G_{a-1} & G_{a-2} & \cdots & G_1 \end{bmatrix} = 0 \tag{3.132}$$

provided this is an equation in $\lambda_a$.

The proof of Theorem 3.11 follows closely the proof of Theorem 3.10, and should be quite apparent.

Solving the generalized eigenvalue problems (3.115) and (3.132) is by no means trivial, and from a computational standpoint our earlier results will often be preferable. The importance of Theorems 3.10 and 3.11 is the linkage they provide between all the results of this chapter. We now give an algorithm which shows dramatically the link between Theorems 3.10 and 3.11 and Theorems 3.4 and 3.5.

<u>Lemma 3.1</u> Let the Laurent expansion of G(s) at a pole or zero q be

$$G(s) = \frac{1}{(s-q)^c} G_o + \frac{1}{(s-q)^{c-1}} G_1 + \dots + G_c + (s-q)G_{c+1} + \dots \tag{3.133}$$

and define the set of Toeplitz matrices

$$T_i = \begin{bmatrix} G_o & 0 & & 0 \\ G_1 & \ddots & \ddots & \\ \vdots & & \ddots & 0 \\ G_i & \dots & G_1 & G_o \end{bmatrix} \quad i = 0, 1, \dots \tag{3.134}$$

Now define the sequence

$$k_i = \text{RANK } T_i - \text{RANK } T_{i-1}, \; i = 0, 1, \dots \tag{3.135}$$

with RANK $T_{-1} = 0$. Then the structure indices of q as a <u>pole</u> are $\{k_i, i = 0, 1, \dots c-1\}$ and the structure indices of q as a <u>zero</u> are $\{k_i, i = c+1, c+2, \dots 2c\}$.

This result is due to Verghese [12] and Van Dooren <u>et al</u>. [13], and it can be used to compute the structure indices of G(s) without putting G(s) in Smith-MacMillan form.

Now compare the matrices in (3.115) and (3.134). Except for the $\lambda_a I$ in (3.115), they are the same! Comparing Theorem 3.10 and Lemma 3.1 shows

that Theorems 3.4 and 3.10 are predicting the same orders for the Butterworth patterns for the angles of departure. Similarly, Theorems 3.5 and 3.11 predict the same orders for the angles of arrival.

This agreement seems to indicate that the simple null structure assumptions in Theorems 3.10 and 3.11 and the assumptions involving the principal minors of $W(s)$ in Theorems 3.4 and 3.5 are equivalent. This would be a nice result, since it would confirm that the assumptions of Theorems 3.4 and 3.5 are indeed generic. Unfortunately, we have not been able to show this equivalence, although we suspect strongly that it exists.

Theorems 3.10 and 3.11 can also be related to the Laurent series results of Section 3.4. If $p_i$ is a first-order pole, only one branch may depart from it, and hence there can only be one non-zero solution to (3.115). For a first-order pole (3.115) becomes

$$\text{DET}\ [G_{-1} - \lambda_1 I] = 0 \tag{3.136}$$

and so $\lambda_1$ is the single non-zero eigenvalue of $G_{-1}$. But TR $G_{-1}$ is the sum of the eigenvalues of $G_{-1}$, and if all of them except $\lambda_1$ are zero, then (3.114) yields

$$\theta_{\text{depart}} = \text{ARG}\ [-\lambda_1] = \text{ARG}\ [-\text{TR}\ G_{-1}] \tag{3.137}$$

which agrees with Theorem 3.6.

If $p_i$ is a simple $n^{th}$-order pole, (3.115) becomes

$$\text{DET}\ [G_{-n} - \lambda_n I] = 0 \tag{3.138}$$

and again there can only be one non-zero solution. This will again be the single non-zero eigenvalue of $G_{-n}$, and (3.114) now yields

$$\theta_{\text{depart}} = \frac{1}{n} \text{ARG } [-\lambda_n] + \frac{j360°}{n}, \; j = 0, 1, \ldots n - 1$$

$$= \frac{1}{n} \text{ARG } [-\text{TR } G_{-n}] + \frac{j360°}{n}, \; j = 0, 1, \ldots n - 1 \quad (3.139)$$

which agrees with Theorem 3.8.

As this thesis was being written, we were made aware of concurrent and independent research into the natures of the angles of arrival and departure by Byrnes and Stevens [20]. In [20], Byrnes and Stevens derive the main result of Section 3.3.2, i.e. that loci depart from poles and arrive at zeros in Butterworth patterns whose orders are the MacMillan indices of G(s) at the pole or zero in question. They also show that the assumptions of Theorems 3.4 and 3.5 are in fact equivalent to simple null structure assumptions on the matrices obtained when G(s) is block-diagonalized, and hence are generic. However, they derive no explicit equations for the angles of arrival and departure, and they do not consider the approaches taken in Sections 3.4 and 3.5.

# CHAPTER IV

## Branch Points and Break Points

### 4.1 Introduction

In this chapter we consider the other two types of points, besides poles and zeros, that are significant to the behavior of the multivariable root locus. These are branch points, which are associated with unusual behavior of the multivariable root locus and are not present in the SISO case, and break points, short for breakin points and breakout points, where a branch on the real axis suddenly breaks out into the complex portion of the s-plane, or the reverse.

Branch points are perhaps the most startling new phenomenon encountered in generalizing the root locus from the SISO case to the multivariable case. They are associated with the unusual loops and swerves sometimes seen in multivariable root loci (see [5]). In particular, the branch points on the real axis are associated with the "turnaround" of root loci on the real axis depicted in Example 4.1 below. It will be shown in this chapter how branch points may be computed and how the "turnaround" behavior may be predicted.

Break points are well known from the SISO root locus, but they have not been considered in the multivariable context. We show in this chapter how break points may be computed, and that the angles at which branches break into and out of the real axis are evenly spaced over 360°, as in the SISO case.

## 4.2 Branch Points

### 4.2.1 Computation of Branch Points

Before the effects of branch points on the root loci can be ascertained, the branch points themselves must be computed. We now give two procedures for computing the branch points: one for the case of a two-input-two-output system ($m = 2$), and one for systems with three or more inputs and outputs.

Theorem 4.1 If $m = 2$, the branch points are given by the solutions to

$$\Delta(s) \triangleq (\mathrm{TR}\ G(s))^2 - 4\ \mathrm{DET}\ G(s) = 0 \tag{4.1}$$

and the gain $g_o$ at a branch point $s_o$ is given by

$$g_o = \tfrac{1}{2}\mathrm{TR}\ G(s_o). \tag{4.2}$$

Theorem 4.1 follows immediately from the characteristic equation of a system with $m = 2$, which is

$$g^2 - (\mathrm{TR}\ G(s))g + \mathrm{DET}\ G(s) = 0. \tag{4.3}$$

Solving this, we have

$$g = \tfrac{1}{2}\left(\mathrm{TR}\ G(s) \pm \sqrt{(\mathrm{TR}\ G(s))^2 - 4\ \mathrm{DET}\ G(s)}\right) \tag{4.4}$$

and recalling (from Chapter II) that branch points are by definition points where the characteristic equation has a multiple root $g_o$, the result follows.

Theorem 4.2 The branch points of a root locus described by $\Phi(g,s) = 0$ are given by the solutions to the simultaneous equations

$$\Phi(g,s) = 0 \tag{4.5a}$$

$$\frac{\partial}{\partial g}\Phi(g,s) = 0. \tag{4.5b}$$

Remark The resultant (see Appendix) may be used to solve (4.5).

We prove Theorem 4.2 by noting that if $g_o$ is a multiple root of $\Phi(g,s) = 0$, we may write, for some $s_o$,

$$\Phi(g,s_o) = (g - g_o)^2\tilde{\Phi}(g,s_o) \tag{4.6}$$

and we have

$$\frac{\partial\Phi}{\partial g}(g,s_o) = 2(g - g_o)\tilde{\Phi}(g,s_o) + (g - g_o)^2\frac{\partial\tilde{\Phi}}{\partial g}(g,s_o). \tag{4.7}$$

Setting $g = g_o$ makes both (4.6) and (4.7) zero.

It should be noted that higher-order poles and zeros may be branch points (with $g_o = 0$ or $-\infty$). We exempt this case from the results to follow.

### 4.2.2 Effects of Branch Points on Root Loci

The effect that a branch point can have on the form of the root locus is best illustrated by an example.

Example 4.1 Plot the root locus for

$$G(s) = \frac{1}{(s+1)(s+2)}\begin{bmatrix} s-1 & s \\ -6 & s-2 \end{bmatrix}$$

It is shown in Chapter V (and also in [1], from which this example is taken) that the root locus is as drawn in Fig. 5.2. Note that the branch departing from the pole at -1 moves in the positive real direction, then abruptly turns 180° at the branch point at 1/24. Certainly this type of behavior is not characteristic of SISO root loci!

As explained in Chapter II, this unusual behavior is observed at branch points because it is at these points that the root locus "jumps" from one sheet of its Riemann surface to another, which maintains continuity but allows for a sudden change in direction. This is discussed in more detail in [1] using the 180° phase contours of the algebraic function g(s); here

we are more interested in describing this behavior than in accounting for it.

It should also be noted that the root locus can "jump" from one Riemann surface to another at places where it crosses a branch cut. Branch cuts are the "seams" where different copies of the complex plane have been "stitched together" to form the Riemann surface. They are made between two branch points, or between a branch point and infinity, by a procedure described in [1]. The very unusual behavior of some of the root loci in [5] may be associated with branch cuts, but a detailed explanation of this behavior will require more research.

The following argument, due to Postlethwaite [18], may be helpful in understanding why branch points produce the "turnaround" effect on root loci. Since $\Phi(g,s) = 0$ for all $(g,s)$ on the root locus, we have

$$\frac{d}{dg}\Phi(g,s) = \frac{\partial}{\partial g}\Phi(g,s) + \frac{\partial}{\partial s}\Phi(g,s)\frac{ds}{dg} = 0 \tag{4.8}$$

and at a branch point $(g_o,s_o)$ using Theorem 4.2, we have

$$\frac{\partial}{\partial s}\Phi(g_o,s_o) = 0 \text{ or} \tag{4.9a}$$

$$\frac{ds}{dg}\Big|_{s_o,g_o} = 0. \tag{4.9b}$$

But (4.9b) implies that $s_o$ is a stationary point of the root locus -- a point where a branch turns around and doubles back on itself.

We now show that it is possible to determine on which "side" of a branch point a branch of the root locus will approach, reach the branch point, turn around, and depart. This result is quite important since without it we can say little about the locations of loci on the real axis. The

following theorem will be used in Chapter V:

<u>Theorem 4.3</u> Given a branch point $s_o$ on the real axis, the root locus will approach it, turn around, and depart from it on the left side (respectively on the right side) if

$$\mathrm{SGN}\left[\frac{\partial^2\Phi}{\partial g^2}\frac{\partial\Phi}{\partial s}\Big|_{s=s_o}\right] = 1 \text{ (respectively } -1). \tag{4.10}$$

<u>Remark</u> Recall that we have $g_o = \frac{1}{2}\mathrm{TR}\, G(s_o)$ at a branch point.

We prove Theorem 4.3 as follows. In the vicinity of the branch point $s_o$, define

$$\delta s = s - s_o \tag{4.11}$$

and for a small perturbation $\delta g$ in g write the Taylor series

$$\delta s = \frac{ds}{dg}\Big|_{s_o}\delta g + \frac{1}{2}\frac{d^2s}{dg^2}\Big|_{s_o}(\delta g)^2 + \ldots \tag{4.12}$$

The first term is zero. Neglecting higher-order terms, one has

$$\mathrm{SGN}\,[\delta s] = \mathrm{SGN}\,[\frac{d^2s}{dg^2}\Big|_{s_o}]. \tag{4.13}$$

This illustrates the "turnaround" behavior -- <u>regardless</u> of the sign of $\delta g$, which differentiates "approaching" and "departing," the sign of $\delta s$ does not change. Thus s is always on the same side of $s_o$.

From (4.8) we may write

$$\frac{ds}{dg} = -\frac{\frac{\partial\Phi}{\partial g}}{\frac{\partial\Phi}{\partial s}} \tag{4.14}$$

and taking the derivative with respect to g, we get

$$\frac{d^2s}{dg^2} = -\frac{\left[\frac{\partial\Phi}{\partial s}\left(\frac{d}{dg}\frac{\partial\Phi}{\partial g}\right) - \frac{\partial\Phi}{\partial g}\left(\frac{d}{dg}\frac{\partial\Phi}{\partial s}\right)\right]}{\left(\frac{\partial\Phi}{\partial s}\right)^2} \tag{4.15}$$

and evaluating this expression at the branch point $s_o$, we have

$$\frac{d^2s}{dg^2}\Big|_{s_o} = -\left(\frac{\frac{\partial^2\Phi}{\partial g^2}}{\frac{\partial\Phi}{\partial s}}\right)\Big|_{s = s_o}. \tag{4.16}$$

Using (4.13) and (4.16), we finally obtain

$$\mathrm{SGN}\,[\delta s] = -\mathrm{SGN}\left[\frac{\partial^2\Phi}{\partial g^2}\frac{\partial\Phi}{\partial s}\Big|_{s = s_o}\right] \tag{4.17}$$

and the theorem follows.

There is an interesting corollary to this theorem in the special case $m = 2$:

<u>Corollary 4.1</u> If $m = 2$, (4.10) simplifies to

$$\mathrm{SGN}\,[\tfrac{\partial}{\partial s}\,\Delta(s_o)] = 1 \text{ (respectively } -1) \tag{4.18}$$

if the loci are on the right side (respectively left side) of $s_o$.

This is not difficult to show. For $m = 2$ the characteristic equation is (4.3), and (4.10) becomes

$$\mathrm{SGN}\left[\frac{\partial^2\Phi}{\partial g^2}\frac{\partial\Phi}{\partial s}\Big|_{s = s_o}\right] = \mathrm{SGN}\left[2\,\frac{\partial}{\partial s}\,(-\mathrm{TR}\,G(s)g + \mathrm{DET}\,G(s))\Big|_{s = s_o}\right]. \tag{4.19}$$

But recalling (4.2) from Theorem 4.1, this becomes

$$\mathrm{SGN}\left[\frac{\partial^2\Phi}{\partial g^2}\frac{\partial\Phi}{\partial s}\Big|_{s=s_o}\right] = \mathrm{SGN}\left[-2\left(\left(\frac{\partial}{\partial s}\,\mathrm{TR}\,G(s)\right)\left(\tfrac{1}{2}\mathrm{TR}\,G(s)\right)\right.\right.$$

$$\left.\left.-\frac{\partial}{\partial s}\,\mathrm{DET}\,G(s)\right)\Big|_{s=s_o}\right] = \mathrm{SGN}\left[-\tfrac{1}{2}\,\frac{\partial}{\partial s}\left((\mathrm{TR}\,G(s))^2\right.\right.$$

$$\left.\left.-4\,\mathrm{DET}\,G(s)\right)\Big|_{s=s_o}\right] = -\mathrm{SGN}\left[\frac{\partial}{\partial s}\,\Delta(s_o)\right] \qquad (4.20)$$

and the result follows. Thus the loci will be on the side of the branch point for which $\Delta(s)$ is positive -- a fact that we will interpret in Chapter V.

## 4.3 Break Points

### 4.3.1 Computation of Break Points

We now give a procedure for computing the break points. Recall (again from Chapter II) that break points are by definition points where the characteristic equation has a multiple root $s_o$.

Theorem 4.4 The break points are given by the solutions to the simultaneous equations

$$\Phi(g,s) = 0 \qquad (4.21)$$

$$\frac{\partial}{\partial s}\,\Phi(g,s) = 0 \qquad (4.22)$$

Remark Again, we may use the resultant (see Appendix) to solve (4.21) and (4.22) by rewriting $\Phi(g,s)$ as

$$\Phi(g,s) = \Psi(s,g) \triangleq B_n(g)s^n + B_{n-1}(g)s^{n-1} + \ldots + B_o(g) = 0. \qquad (4.23)$$

Now the resultant yields an equation in g. We may then obtain the break point $s_o$ by solving (4.22).

Theorem 4.4 can be proved by repeating the proof of Theorem 4.2 with g and s interchanged, but the following proof is more insightful. Define

$$\delta\Phi(g_o,s_o) = \Phi(g,s) - \Phi(g_o,s_o) \tag{4.24}$$

for $(g,s)$ near $(g_o,s_o)$. Since $\Phi(g,s) = 0$ for all $(g,s)$ of the root locus, we have

$$\delta\Phi(g_o,s_o) = \frac{\partial\Phi}{\partial s}(g_o,s_o)\delta s + \frac{\partial\Phi}{\partial g}(g_o,s_o)\delta g = 0 \tag{4.25}$$

where we have taken

$$\delta s = s - s_o \tag{4.26a}$$

$$\delta g = g - g_o \tag{4.26b}$$

sufficiently small to neglect higher-order terms. If we now consider a locus point on the real axis, all quantities in (4.25) will be real except

$$\delta s = \mathrm{RE}\,[\delta s] + j\ \mathrm{IM}\,[\delta s]. \tag{4.27}$$

Substituting (4.27) in (4.25) and equating real and imaginary parts to zero, we get

$$\mathrm{IM}\,[\delta s]\,\frac{\partial\Phi}{\partial s}(g_o,s_o) = 0 \tag{4.28}$$

$$\mathrm{RE}\,[\delta s]\,\frac{\partial\Phi}{\partial s}(g_o,s_o) + \delta g\,\frac{\partial\Phi}{\partial g}(g_o,s_o) = 0. \tag{4.29}$$

If we now make $s_o$ a break point, one has $\mathrm{IM}\,[\delta s] \neq 0$ for the branch breaking in or out. This and (4.28) prove the theorem.

### 4.3.2 Breakin and Breakout Angles

We now show that the angles of loci breaking in or out are the same as in the SISO case.

Theorem 4.5 If several branches of the root locus are approaching and

leaving a point on the real axis, their angles are evenly distributed over 360°, and branches approaching and leaving the break point are interleaved (i.e. they alternate).

Remark Note that branches on the real axis must be included -- not just the branches breaking in or out.

To prove Theorem 4.5, we first show that if k branches are approaching a point $s_o$ and k branches are leaving $s_o$, then the first k - 1 derivatives of the algebraic function g(s) are zero at $s_o$. We have

$$\frac{d\Phi}{ds}(g_o,s_o) = \frac{\partial\Phi}{\partial s}(g_o,s_o) + \frac{\partial\Phi}{\partial g}(g_o,s_o)\frac{dg}{ds}\Big|_{s_o} = 0. \tag{4.30}$$

If $s_o$ is a break point, $\frac{\partial\Phi}{\partial s}(g_o,s_o)$ is zero and $\frac{\partial\Phi}{\partial g}(g_o,s_o)$ is non-zero, so that

$$\frac{dg}{ds}\Big|_{s_o} = 0. \tag{4.31}$$

If k different loci are all passing through $s_o$, $s_o$ is a root of multiplicity k of the characteristic equation. This means that we have

$$\frac{\partial^{(i)}}{\partial s^{(i)}}\Phi(g_o,s_o) = 0,\ i = 0, 1, \ldots k - 1. \tag{4.32}$$

By repeatedly taking derivatives with respect to s of (4.30) and using (4.31) and (4.32), it can be shown that

$$\frac{d^{(i)}g}{ds^{(i)}} = 0,\ i = 1, 2, \ldots k - 1. \tag{4.33}$$

Now, in the vicinity of the break point $s_o$ define

$$\delta s = s - s_o \tag{4.34}$$

and for a small perturbation $\delta g$ in g write the Taylor series

$$\delta g = \frac{dg}{ds}\Big|_{s_o} \delta s + \tfrac{1}{2}\frac{d^2g}{ds^2}\Big|_{s_o} (\delta s)^2 + \ldots \tag{4.35}$$

Of course the first k - 1 terms of (4.35) are zero, from (4.33). Taking the first non-zero term and neglecting the higher-order terms, we have

$$\delta g = \frac{1}{k!}\frac{d^{(k)}g}{ds^{(k)}}\Big|_{s_o} (\delta s)^k. \tag{4.36}$$

Also, by repeatedly taking derivatives of (4.30) we may obtain an expression for $\frac{d^{(k)}g}{ds^{(k)}}\Big|_{s_o}$ in terms of various partial derivatives of $\Phi(g,s)$ evaluated at $(g_o,s_o)$, and these will all be <u>real</u> for $s_o$ on the real axis. Hence $\frac{d^{(k)}g}{ds^{(k)}}\Big|_{s_o}$ is a real number, and from (4.36)

$$k \text{ ARG } [\delta s] = \text{ARG } [\delta g] - \text{ARG}\left[\frac{d^{(k)}g}{ds^{(k)}}\Big|_{s_o}\right] = 0° \text{ or } 180°. \tag{4.37}$$

We may now write

$$\text{ARG } [\delta s] = \frac{1}{k}(\theta + n360°),\ n = 0, 1, \ldots k - 1 \tag{4.38}$$

where $\theta$ is 0° or 180°, depending on the sign of $\delta g$. To find the angles for branches departing from $s_o$, take $\delta g > 0$, and to find the angles for branches arriving at $s_o$, take $\delta g < 0$. These form two $k^{th}$-order Butterworth patterns, with principal angles of 0° and 180°. This proves the theorem.

# CHAPTER V

## Root Loci on the Real Axis

### 5.1 Introduction

It is generally very difficult to plot the root locus precisely for finite gains. Exact analytical expressions for the various branches are usually difficult or impossible to obtain, and attempts to discern the locus by actually plotting the closed-loop poles for various values of k tend to be onerous at best. These difficulties hold even in the SISO case; they are considerably greater in the multivariable case.

There is, however, one part of the root locus that can be plotted exactly with relative ease -- the portion that lies on the real axis. The form of the locus on the real axis is of course known exactly, and, in addition, the number of branches of the root locus on the real axis can change only at a finite number of points. Thus a relatively small amount of work may yield an exact plot of a sizable portion of the root locus; indeed in some cases all of it (see Example 5.2). Knowledge of asymptotes and angles of arrival and departure is often sufficient to sketch the rest of it.

In the SISO case the rule for the location of root loci on the real axis is very simple (see Chapter II). This is because only one branch of the root locus can lie on the real axis at any given point. However, in the multivariable case as many as m branches can lie on the real axis at a given point. Thus the problem is not one of determining whether a branch is present, but one of determining <u>how many</u> branches are present. The "turn-around" behavior associated with branch points (not present in the

SISO case) makes things even more complex.

The first observation is that, unlike in the SISO case, knowledge of pole and zero locations alone is <u>not sufficient</u> for determining the number of loci on the real axis. The following example makes this clear:

<u>Example 5.1</u> Plot the root loci for

$$G_1(s) = \begin{bmatrix} \frac{s+1}{s+2} & 0 \\ 0 & \frac{s-2}{s-1} \end{bmatrix} \text{ and } G_2(s) = \begin{bmatrix} \frac{s-2}{s+2} & 0 \\ 0 & \frac{s+1}{s-1} \end{bmatrix}.$$

Since each of these represents two decoupled SISO systems, we may immediately plot the root loci, which are given in Fig. 5.1. Note that although $G_1(s)$ and $G_2(s)$ have their poles and zeros at the same locations, the number of loci on the real axis between -1 and 1 are different.

Despite this difficulty, some equations for the number of branches of the root locus on the real axis at a given point may be found. Also, these equations are not too complicated to be useful. We consider first the case $m = 2$, then the general case, and finally the case when $G(s)$ is symmetric.

## 5.2 <u>The Case of Two-Input-Two-Output Systems</u>

The following theorem provides a step-by-step procedure for determining the number of root loci on the real axis by solving three simple inequalities for bounds on s.

<u>Theorem 5.1</u> For a system with $m = 2$, let s be any point on the real axis. Define

$$\Delta(s) \triangleq (\text{TR } G(s))^2 - 4 \text{ DET } G(s). \tag{5.1}$$

Then we have:

(i) If <u>DET G(s) < 0</u>, exactly <u>one</u> branch lies on the real axis at s;

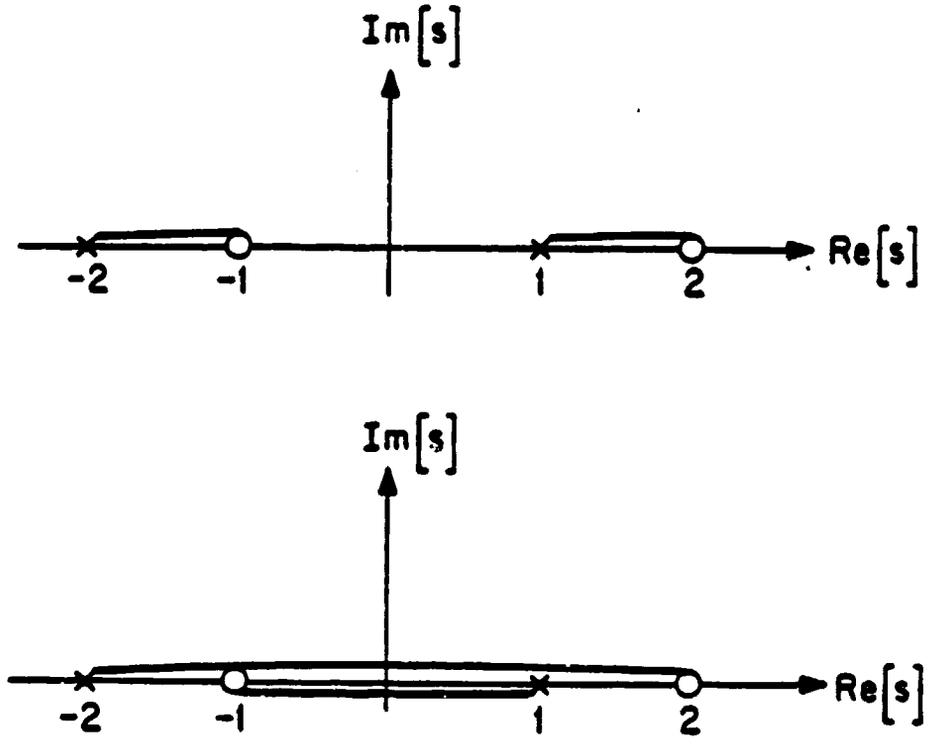


Figure 5.1

Root Loci for Example 5.1

(ii) If DET $G(s) > 0$, two or zero branches lie on the real axis at s:

(a) If $\Delta(s) < 0$, zero branches lie on the real axis at s;

(b) If $\Delta(s) > 0$ and TR $G(s) > 0$, zero branches lie on the real axis at s;

(c) If $\Delta(s) > 0$ and TR $G(s) < 0$, exactly two branches lie on the real axis at s.

To prove Theorem 5.1, we will follow the order in which it is stated. This will minimize confusion and also minimize the amount of work needed, since DET $G(s) > 0$ is necessary to have $\Delta(s) < 0$, and since TR $G(s)$ is sometimes not needed.

We start by observing that the characteristic equation with $m = 2$ is

$$\Delta(g,s) = g^2 - (\text{TR } G(s))g + \text{DET } G(s) = 0. \tag{5.2}$$

Now let s be real and vary over the entire real axis. For a given $s_o$, the number of branches on the real axis at $s_o$ is equal to the number of negative real roots of (5.2) with $s = s_o$ (recall that a negative real g corresponds to a positive real gain k). Since the roots of (5.2) are given by

$$g = \tfrac{1}{2}\left(\text{TR } G(s) \pm \sqrt{\Delta(s)}\right) \tag{5.3}$$

we merely investigate how many negative real values of g we get for various values of $\Delta(s)$, TR $G(s)$, and DET $G(s)$. Thus if $\Delta(s)$ is negative the two values of g will be complex, and there will be zero branches on the real axis at s. But $\Delta(s)$ can only be negative if DET $G(s)$ is positive. If DET $G(s)$ is negative, then

$$|\text{TR } G(s)| < \sqrt{(\text{TR } G(s))^2 - 4 \text{ DET } G(s)} \tag{5.4}$$

and the two values of g are real and of opposite sign. Hence there is

exactly one branch on the real axis at s. The other rules follow similarly.

We now make some remarks that will hopefully aid in understanding some of the features of this theorem:

1. Note that the number of loci on the real axis changes by one whenever DET G(s) changes sign. This makes sense, since loci start at poles and end at zeros and since DET G(s) changes sign at a (first-order) pole or zero.

2. The number of loci on the real axis may change by two whenever $\Delta(s)$ changes sign. But the points at which $\Delta(s)$ will change sign are the branch points (recall from Theorem 4.1 that $\Delta(s)$ is zero at a branch point), and the "turn-around" behavior of a root locus branch at a branch point would indeed make the number of loci change by two. In fact, Corollary 4.1 correctly predicted that the "side" of a branch point from which a branch would approach, turn around, and depart is the side for which $\Delta(s)$ is positive!

3. The number of loci on the real axis will occasionally change by two at points where TR G(s) changes sign. This happens when there is a double pole or zero with both branches departing or arriving on the same side. For example, consider

$$G(s) = \begin{bmatrix} \frac{s-1}{s+1} & 0 \\ 0 & \frac{s-2}{s+1} \end{bmatrix}.$$

Clearly there will be two branches both departing the pole at -1 in the positive direction. We have

$$\text{TR } G(s) = \frac{2s - 3}{s + 1}$$

which does indeed change sign at -1.

Note that if

$$G(s) = \frac{1}{d(s)} \begin{bmatrix} n_{11}(s) & n_{12}(s) \\ n_{21}(s) & n_{22}(s) \end{bmatrix} \tag{5.5}$$

we have

$$\text{TR } G(s) = \frac{1}{d(s)} (n_{11}(s) + n_{22}(s)) \tag{5.6a}$$

$$\text{DET } G(s) = \frac{1}{d(s)^2} (n_{11}(s)n_{22}(s) - n_{12}(s)n_{21}(s)) \tag{5.6b}$$

$$\Delta(s) = \frac{1}{d(s)^2} \left((n_{11}(s) - n_{22}(s))^2 + 4n_{12}(s)n_{21}(s)\right) \tag{5.6c}$$

and since $d(s)^2$ is always positive (except at poles) we may neglect it in solving the inequalities for bounds on s.

We end this section with an example (taken from [1]) to illustrate how Theorem 5.1 may be implemented.

<u>Example 5.2</u> Plot the root locus for

$$G(s) = \frac{1}{(s + 1)(s + 2)} \begin{bmatrix} s - 1 & s \\ -6 & s - 2 \end{bmatrix}.$$

By computing $\Phi(g,s)$, or by some other procedure, it can be verified that G(s) has some first-order poles at -1 and -2, and no finite zeros. Using (5.6b) one has

$$\text{DET } G(s) = \frac{s^2 + 3s + 2}{((s + 1)(s + 2))^2}$$

so that DET G(s) < 0 for $-2 < s < -1$ and consequently there is one branch on the real axis for $-2 < s < -1$.

Using (5.6c) we have

$$\Delta(s) = \frac{1 - 24s}{((s + 1)(s + 2))^2}$$

so that $\Delta(s) < 0$ for $s > 1/24$ and therefore there are no branches on the real axis for $s > 1/24$.

Finally, using (5.6a) we have

$$G(s) = \frac{2s - 3}{(s + 1)(s + 2)}$$

and restricting ourselves to the range of s not already considered we have TR $G(s) < 0$ for $s > -1$ or $s < -2$, and this implies that there are two branches on the real axis everywhere else.

The root locus branches on the real axis are plotted in Fig. 5.2. But since we have two poles, no finite zeros, and two asymptotes, this is the complete root locus!

## 5.3 The General Case

The general case when $m > 2$ is much more complicated than the case when $m = 2$. However, after evaluating a few quantities, we may use the following theorem to determine immediately the exact number of loci everywhere on the real axis.

Theorem 5.2 Assume that all higher-order poles and zeros on the real axis are "simple" ("simple" poles and zeros were defined in Chapter III). Then the exact number N of loci on the real axis at a point $s_o$ is given by

$$N = \sum_{\substack{\text{zeros } z_i \text{ of} \\ \text{odd order to} \\ \text{right of } s_o}} \text{SGN}\left[(s - z_i)^{k_i} \text{ TR } G^{-1}(s)\big|_{s = z_i}\right] + \begin{pmatrix}\text{number of} \\ \text{asymptotes} \\ \text{at } +\infty\end{pmatrix}$$

$$+ \sum_{\substack{\text{poles } p_i \text{ of} \\ \text{odd order to} \\ \text{right of } s_o}} \text{SGN}\left[(s - p_i)^{k_i} \text{ TR } G(s)\big|_{s = p_i}\right]$$

$$+ 2 \sum_{\substack{\text{branch points} \\ b_i \text{ to right} \\ \text{of } s_o}} \text{SGN}\left[\frac{\partial^2\Phi}{\partial g^2}\frac{\partial\Phi}{\partial s}\Big|_{b_i}\right] \tag{5.7}$$

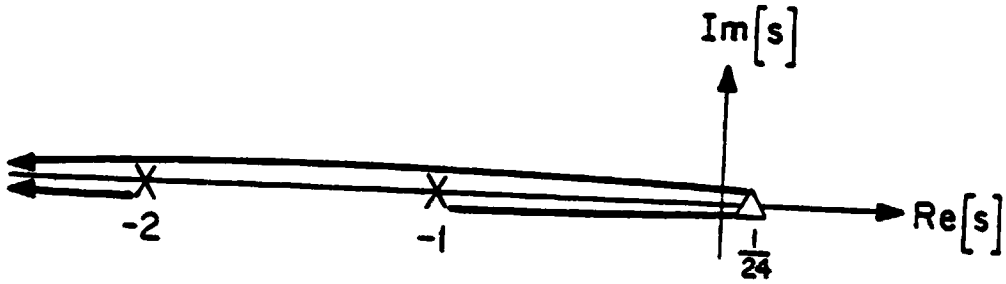


Figure 5.2

Root Locus for Example 5.2

where the $k_i$ are the orders of the poles and zeros, and where the summations are taken over zeros and poles of odd order and branch points <u>on the real axis</u> and to the right of $s_o$.

It should be noted that (5.7) is not nearly as complex as it might appear at first glance. In order to apply Theorem 5.2, we need only evaluate the <u>sign</u> of a quantity at each pole, zero, or branch point. Once this has been done, we simply add up the different contributing terms of (5.7) for each stretch of the real axis between any two of the three types of points to determine the number of loci on that stretch of the real axis.

We prove Theorem 5.2 by a "conservation of loci" argument: each locus must start somewhere, end somewhere, and be continuous in between. We start with just poles and zeros, and then consider break points, asymptotes on the real axis and branch points, adding them in as we proceed.

We claim first that if there are only first-order poles and zeros on the real axis, the number of loci N on the real axis at a point $s_o$ is given by

$$\begin{aligned} N = &\left(\begin{matrix}\text{number of poles to right of } s_o \\ \text{with a branch departing at } 180^\circ\end{matrix}\right) \\ &- \left(\begin{matrix}\text{number of zeros to right of } s_o \\ \text{with a branch arriving at } 180^\circ\end{matrix}\right) \\ &+ \left(\begin{matrix}\text{number of zeros to right of } s_o \\ \text{with a branch arriving at } 0^\circ\end{matrix}\right) \\ &- \left(\begin{matrix}\text{number of poles to right of } s_o \\ \text{with a branch departing at } 0^\circ\end{matrix}\right). \end{aligned} \tag{5.8}$$

This is easy to see, since the first two terms give the number of branches moving in the negative real direction and the last two terms give the number of loci moving in the positive real direction at $s_o$. (Recall that

the angle of arrival is the direction in which the locus is moving when it reaches a zero.)

We now extend this to higher-order poles and zeros that are simple. Recall that a simple pole or zero will have loci departing from it or arriving at it in a single Butterworth pattern. By symmetry, we see immediately that a simple pole or zero of even order can have no effect on the number of loci on the real axis, since such a pole or zero will either have loci departing or arriving at 0° and 180°, or no loci departing at either 0° or 180°. Either way, there can be no contribution to (5.8). On the other hand, a simple pole or zero of odd order must have exactly one locus departing or arriving at either 0° or 180°. The simplest way to determine the angle is to use Theorems 3.8 and 3.9, and upon substitution in (5.8) these yield the first and third terms of (5.7). Note that since we are only considering points on the real axis, all quantities will be real, and in (5.7) we may use the SGN function instead of the ARG function.

Next, we introduce break points and asymptotes on the real axis. It is easy to see that break points have no effect on the number of loci on the real axis, since breakin points act like double poles with loci departing at 0° and 180° and breakout points act like double zeros with loci arriving at 0° and 180°, and neither of these makes any contribution to (5.8). However, asymptotes on the real axis are zeros at infinity with branches arriving at 0°, so according to (5.8) we must add them in. This yields the second term in (5.7).

Finally, we must introduce branch points. Here we must use Theorem 4.3, which stated that the "side" from which a branch will approach a branch point $b_i$, turn around, and depart from it is given by

$$\mathrm{SGN}\left[\frac{\partial^2\Phi}{\partial g^2}\frac{\partial\Phi}{\partial s}\Big|_{b_i}\right] = 1 \text{ (respectively } -1) \tag{5.9}$$

depending on whether the locus is on the left side (respectively the right side) of $b_i$. If the locus is on the left side of $b_i$, then $b_i$ is acting like a combination of a zero with a branch arriving at 0° and a pole with a branch departing at 180°. In that case, according to (5.8), we should <u>add</u> two to the number of loci on the real axis if $b_i$ is to the right. On the other hand, if the loci are on the positive side of $b_i$ everything is reversed and, according to (5.8), we should <u>subtract</u> two from the number of loci. We use Theorem 4.3, and this yields the final term in (5.7). We have now considered all possibilities, and Theorem 5.2 is proved.

The following corollary is interesting, primarily because it is the closest we can come to generalizing the SISO rule for loci on the real axis to the multivariable case. It may also be used as a check when applying Theorem 5.2, and may even provide sufficient information by itself for some applications.

<u>Corollary 5.1</u> Assume that all higher-order poles and zeros on the real axis are simple, and that there are no asymptotes on the real axis at $+\infty$. Then, counting multiplicities, at least one branch (in fact, an odd number of branches) of the root locus lies on the real axis at a given point $s_o$ if there is an <u>odd</u> number of poles and zeros to the right of $s_o$.

<u>Remarks</u> (1) There is an odd number of poles and zeros to the right of $s_o$ if and only if DET $G(s_o) < 0$ (this is proved below);

(2) If there is an even number of poles and zeros to the right of $s_o$, then there is an even number of branches on the real axis at $s_o$. Unfortunately, <u>zero</u> is an even number.

Corollary 5.1 follows almost immediately from (5.8). Making the

obvious substitutions, write (5.8) as $(x_1 - x_2 + x_3 - x_4)$. The total number of poles and zeros to the right of $s_o$, counting multiplicities, is $(x_1 + x_2 + x_3 + x_4)$, and it is clear that (5.8) will be odd if and only if this quantity is odd, guaranteeing at least one branch on the real axis at $s_o$. Recalling that break points have no effect on the number of loci on the real axis, and that branch points can only change the number of loci by an even number completes the proof.

The first remark follows from the fact that DET G(s) changes sign at the poles and zeros of G(s) (counting multiplicities), and from the following argument which proves that DET G(s) is positive at infinity if there are no asymptotes there. Suppose that DET G(s) is negative at infinity. Then the product of the eigenvalues of G(s) at infinity is negative, and G(s) must have at least one negative real eigenvalue at infinity. But the characteristic equation for the root locus is

$$\Delta(g,s) = \text{DET } (gI - G(s)) = 0 \tag{5.10}$$

so if G(s) has a negative real eigenvalue at infinity there must be a branch of the root locus at infinity, contradicting the assumption that there are no asymptotes on the real axis at $+\infty$.

There is another way of showing that if DET $G(s_o)$ is negative there is at least one branch of the root locus on the real axis at $s_o$. Consider $\Delta(g,s_o)$ to be a polynomial in g of degree m with constant term $(-1)^m$ DET $G(s_o)$. If m is odd and DET $G(s_o)$ is negative, then the constant term is positive. But for large, negative values of g, $\Delta(g,s_o)$ will be negative. Since $\Delta(g,s_o)$ is continuous, it must cross the negative g-axis somewhere, and hence $\Delta(g,s_o)$ must have at least one negative root, which

implies that a branch of the root locus lies on the real axis at $s_o$. If m is even the same argument applies, with the signs of $(-1)^m$ DET $G(s_o)$ and $\Delta(-\infty,s_o)$ reversed.

Considering $\Delta(g,s_o)$ in this fashion also gives us an upper bound on the number of loci that may lie on the real axis at $s_o$. Since $\Delta(g,s_o)$ has degree m, it can have at most m negative real roots. Hence there can be at most m loci on the real axis at $s_o$.

## 5.4 The Case of Symmetric G(s)

In this section we specialize to the case when G(s) is symmetric. Since G(s) is symmetric for reciprocal networks, this case does have some practical applications. Our final result depends on matrices obtained from G(s) by several transformations, so for clarity we will proceed with its derivation and then, having derived it, state the result as a theorem at the end of this section. This result is due to Levy [27].

The characteristic equation of the root locus is

$$\Delta(g,s) = \text{DET}\,[gI - G(s)] = 0 \tag{5.11}$$

so the number of branches of the root locus at a point s on the real axis is the number of negative real eigenvalues of G(s). However, if G(s) is symmetric then <u>all</u> of its eigenvalues are real, and we need only to determine how many of them are positive and how many of them are negative.

In order to keep track of the number of negative eigenvalues of G(s), we will use the <u>signature</u> of G(s), which we now define.

<u>Definition</u> Let M be a non-singular real symmetric matrix, and define

$$m_+ = \text{the number of positive eigenvalues of } M \tag{5.12a}$$

$$m_- = \text{the number of negative eigenvalues of } M. \tag{5.12b}$$

Then the <u>signature</u> $\sigma(M)$ of M is defined as

$$\sigma(M) \triangleq m_+ - m_-. \tag{5.13}$$

<u>Remark</u> Since M is non-singular, we have

$$m_+ + m_- = m \tag{5.14}$$

where m is the size of M. Therefore we may determine $m_+$ and $m_-$ from $\sigma(M)$.

The signature of a matrix is a useful concept in the present context because it is invariant under congruency transformations. Thus if L is a non-singular real matrix and we have

$$P = LML^T \tag{5.15}$$

then $\sigma(P) = \sigma(M)$. We will use this property several times in this section.

Now write the left matrix fraction description of G(s)

$$G(s) = D^{-1}(s)N(s) \tag{5.16}$$

where D(s) and N(s) are left coprime polynomial matrices. The poles of G(s) are the zeros of DET D(s), and the zeros of G(s) are the zeros of DET N(s). Since the product of the eigenvalues $g_i(s)$ of G(s) is given by

$$\prod_{i=1}^{m} g_i(s) = \text{DET } G(s) = \frac{\text{DET } N(s)}{\text{DET } D(s)} \tag{5.17}$$

the eigenvalues $g_i(s)$ can only change sign at the real poles and zeros of G(s).

For all points on the real axis that are not poles and zeros of G(s), we have

$$D(s)G(s)D^T(s) = N(s)D^T(s) \triangleq P(s) \tag{5.18}$$

is a congruency transformation of G(s), and hence

$$\sigma(G(s)) = \sigma(N(s)D^T(s)) = \sigma(P(s)) \tag{5.19}$$

Since: (1) the number of loci on the real axis at s is the number of negative real eigenvalues of G(s); (2) the number of negative real eigenvalues of G(s) may be determined from $\sigma(G(s)) = \sigma(P(s))$; and (3) $\sigma(P(s)) = \sigma(G(s))$ can only change at a pole or zero $s_o$ of G(s), we now investigate how $\sigma(P(s))$ changes near a pole or zero $s_o$. A procedure for doing this follows.

We may write

$$P(s) = P_o + P_1(s - s_o) + \ldots + P_d(s - s_o)^d \tag{5.20}$$

where the $P_i$ are real and symmetric and where $P_o$ is singular. Hence there exists a real non-singular matrix $T_o$ such that

$$T_o P_o T_o^T = \begin{bmatrix} G_o & 0 \\ 0 & 0 \end{bmatrix} \tag{5.21}$$

where $G_o$ is real, symmetric, and non-singular. We may then define

$$Q(s) = T_o P(s) T_o^T = \begin{bmatrix} G_o & 0 \\ 0 & 0 \end{bmatrix} + \sum_{i=1}^{d} \begin{bmatrix} A_i & B_i \\ B_i^T & C_i \end{bmatrix} (s - s_o)^i \tag{5.22}$$

and Q(s) is congruent to P(s).

We now zero out $B_1$ by using another congruency transformation. Define

$$V_1 = G_o^{-1} B_1 \tag{5.23}$$

$$\check{s} = s - s_o \tag{5.24}$$

$$R(s) = \begin{bmatrix} I & 0 \\ -V_1^T\check{s} & I \end{bmatrix} Q(s) \begin{bmatrix} I & -V_1\check{s} \\ 0 & I \end{bmatrix} \tag{5.25}$$

and note that we may write

$$R(s) = \begin{bmatrix} G_o & 0 \\ 0 & 0 \end{bmatrix} + \begin{bmatrix} A_1 & 0 \\ 0 & \check{C}_1 \end{bmatrix} \check{s} + \ldots \tag{5.26}$$

where $\check{C}_1$ is real and symmetric. If $\check{C}_1$ also has full rank we may halt this procedure, since in this case (5.26) has the desired form given in (5.31) below.

If $\check{C}_1$ does not have full rank, this procedure must be repeated starting with (5.21), and with $\check{C}_1$ taking the place of $P_o$. That is, we write

$$T_1\check{C}_1T_1^T = \begin{bmatrix} G_1 & 0 \\ 0 & 0 \end{bmatrix} \tag{5.27}$$

where $T_1$ is a real non-singular matrix and where $G_1$ is real, symmetric, and non-singular. Now define the congruency transformation

$$S(s) = \begin{bmatrix} I & 0 \\ 0 & T_1^T \end{bmatrix} R(s) \begin{bmatrix} I & 0 \\ 0 & T_1 \end{bmatrix} \tag{5.28}$$

and write

$$S(s) = \begin{bmatrix} G_o & 0 \\ 0 & 0 \end{bmatrix} + \left[\begin{array}{c|cc} A_1 & 0 & \\ \hline 0 & \bar{G}_1 & \bar{0} \\ & 0 & 0 \end{array}\right] \check{s} + \sum_{i=2}^{\tilde{d}} \begin{bmatrix} A_i^{(2)} & B_i^{(2)} \\ B_i^{(2)^T} & C_i^{(2)} \end{bmatrix} \check{s}^i. \tag{5.29}$$

Next, zero out $B_2^{(2)}$ using a congruency transformation of the form

$$T(s) = \begin{bmatrix} I & 0 \\ (-\tilde{V}_2^T\tilde{s}^2 - \tilde{V}_1^T\tilde{s}) & I \end{bmatrix} S(s) \begin{bmatrix} I & (-\tilde{V}_2\tilde{s}^2 - \tilde{V}_1\tilde{s}) \\ 0 & I \end{bmatrix} \tag{5.30}$$

and if the resulting $\tilde{C}_2^{(2)}$ does not have full rank, run through the entire procedure yet another time. The procedure will terminate when we have obtained a polynomial matrix of the form

$$Z(s) = \begin{bmatrix} G_o & 0 \\ 0 & 0 \end{bmatrix} + \left[\begin{array}{c|cc} A_1 & 0 & \\ \hline 0 & \bar{G}_1 & \bar{0} \\ & 0 & 0 \end{array}\right] \tilde{s} + \left[\begin{array}{c|cc} A_2^{(2)} & 0 & \\ \hline 0 & \bar{G}_2 & \bar{0} \\ & 0 & 0 \end{array}\right] \tilde{s}^2 + \ldots$$

$$+ \left[\begin{array}{c|cc} A_k^{(k)} & 0 & \\ \hline 0 & \bar{G}_k & \bar{0} \\ & 0 & 0 \end{array}\right] \tilde{s}^k + \begin{bmatrix} A_{k+1}^{(k+1)} & 0 \\ 0 & G_{k+1} \end{bmatrix} \tilde{s}^{k+1} \tag{5.31}$$

where $A_{i+1}^{(i+1)} = \text{DIAG}\ [A_i^{(i)}, G_i]$, and the $G_i$ all have full rank.

Now we may investigate how $\sigma(P(s))$ changes near $s_o$. Since $Z(s)$ was obtained from $P(s)$ by a series of congruency transformations, we have $\sigma(Z(s)) = \sigma(P(s))$. In the vicinity of $s_o$ $Z(s)$ may be approximated by

$$Z(s) \approx \text{DIAG}\ [G_o,\ G_1\tilde{s},\ G_2\tilde{s}^2,\ \ldots\ G_{k+1}\tilde{s}^{k+1}] \text{ for } s \to s_o \tag{5.32}$$

and the eigenvalues of $Z(s)$ are the eigenvalues of $G_o$, $G_1\tilde{s}$, ... and $G_{k+1}\tilde{s}^{k+1}$.

Now consider what happens to the signs of the eigenvalues of $G_i\tilde{s}^i$ if $\tilde{s}$ changes sign from positive to negative. If i is even there will be no changes in the signs, but if i is odd all of the positive eigenvalues will become negative, and vice-versa. Then $\sigma(G_i\tilde{s}^i)$ will change sign, and so the <u>change</u> in $\sigma(G_i\tilde{s}^i)$ will be $-2\sigma(G_i)$. (Note that if $\tilde{s}$ is positive, $\sigma(G_i\tilde{s}^i) = \sigma(G_i)$.) It follows immediately that the change in $\sigma(Z(s))$ will

be

$$\Delta\sigma(Z(s)) = -2\sum_{i \text{ odd}} \sigma(G_i). \tag{5.33}$$

From (5.13) and (5.14) we may write

$$m_-(Z(s)) = \tfrac{1}{2}\Big(m - \sigma(Z(s))\Big) \tag{5.34}$$

where $m_-(Z(s))$ is the number of negative eigenvalues of $Z(s)$ and $m$ is the size of $Z(s)$. This implies that the change in the number of negative real eigenvalues will be

$$\Delta m_-(Z(s)) = -\tfrac{1}{2}\Delta\sigma(Z(s)) = \sum_{i \text{ odd}} \sigma(G_i). \tag{5.35}$$

Now let $s$ vary along the real axis from $+\infty$ to $-\infty$, and assume $G(\infty)$ is positive definite (this is equivalent to assuming that there are no asymptotes on the real axis at $+\infty$). For each pole or zero $s_i$ on the real axis, we may compute a set of matrices $G_j^{(i)}$ by using the above procedure. Then, recalling that $\sigma(Z(s)) = \sigma(P(s)) = \sigma(G(s))$ and that the number of branches on the real axis at $s$ is the number of negative real eigenvalues of $G(s)$, we have proven

<u>Theorem 5.3</u> Assume that there are no asymptotes on the real axis at $+\infty$, and that $G(s)$ is symmetric. For each pole or zero $s_i$ on the real axis compute the matrices $G_j^{(i)}$, using the procedure described above. Then the number of branches $N$ on the real axis at $s$ is given by

$$N = \sum_{\substack{\text{all poles and} \\ \text{zeros } s_i \text{ to} \\ \text{right of } s}} \sum_{j \text{ odd}} \sigma(G_j^{(i)}). \tag{5.36}$$

There is an interesting observation that may be made on the procedure

for generating the $G_i$. Consider the set of Toeplitz matrices

$$T(i) = \begin{bmatrix} P_o & 0 & & 0 \\ P_1 & \ddots & \ddots & \\ \vdots & & \ddots & 0 \\ P_i & \cdots & P_1 & P_o \end{bmatrix}, \; i = 0, 1, \ldots d. \tag{5.37}$$

Recall from Lemma 3.1 that the structure indices of $P(s)$ at $s_o$ are given by

$$k_i = \text{RANK } T(i) - \text{RANK } T(i-1), \; i = 0, 1, \ldots d. \tag{5.38}$$

However, it may also be shown that the congruency transformations used to generate the $G_i$ may be applied to the $T(i)$, yielding matrices of the form

$$\left[\begin{array}{c|c|c|c|c} \begin{matrix} G_o & 0 \\ 0 & 0 \end{matrix} & & 0 & & \cdots \\ \hline A_1 & \begin{matrix} 0 \\ G_1 \; 0 \\ 0 \; 0 \end{matrix} & G_o & \begin{matrix} 0 \\ 0 \\ 0 \end{matrix} & \\ \hline 0 & & & & \cdots \\ \hline A_2^{(2)} & 0 & A_1 & 0 & \\ \hline 0 & \begin{matrix} G_2 \; 0 \\ 0 \; 0 \end{matrix} & 0 & \begin{matrix} G_1 \; 0 \\ 0 \; 0 \end{matrix} & \cdots \\ \hline & \vdots & & \vdots & \end{array}\right]$$

so that we have

$$\text{RANK } G_i = \text{RANK } T(i) - \text{RANK } T(i-1), \; i = 0, 1, \ldots d. \tag{5.39}$$

Therefore the pole-zero structure at $s_o$ is determined by the <u>ranks</u> of the $G_i$, while the number of branches of the root locus at $s_o$ is determined by the <u>signatures</u> of the $G_i$.

C-2

# CHAPTER VI

## Asymptotic Behavior of Root Loci

### 6.1 Introduction

In this chapter we discuss the behavior of the branches of multivariable root loci that tend to infinity as the feedback gain k approaches infinity. We have already examined the behavior of the branches that approach the finite zeros of G(s) as $k \to \infty$ (i.e. the angles of arrival), and we now examine the behavior of the branches that do not approach finite zeros. These branches approach asymptotes as $k \to \infty$, and it should be evident that knowledge of these asymptotes would be a considerable aid in plotting the root locus.

An asymptote is characterized by its angle and by its order, which gives the "velocity" at which the locus tends to infinity. Asymptotes start at points called pivots, and unlike the SISO case, pivots for multivariable root loci may be complex (see Example 6.1).

We consider first the case where all asymptotes are of first order, since this case holds in general. The Newton polygon technique is used to show how the first-order asymptotes may be obtained from the eigenvalues of the first Markov parameter of G(s). We then give equations for the first-order asymptotes and pivots based on the characteristic equation, and give an example with first-order asymptotes, complex pivots, and branch points, break points, and loci on the real axis.

The Newton polygon technique on which this thesis is based seems to be somewhat inapplicable to the case of higher-order asymptotes. Also, a considerable amount of work has already been done on this subject, using

other approaches. For the sake of completeness, we conclude this chapter with a summary of the results of Shaked and Kouvaritakis [15] and Sastry and Desoer [17] on this subject, and we also note some other results.

## 6.2 First-Order Asymptotes and Pivots

In this section we examine the case in which all asymptotes are of first order. Since this is true in general, the results of this section are usually sufficient for computing all asymptotes and pivots. We show first how the asymptotes may be obtained from the first Markov parameter, and then how both the asymptotes and their pivots may be obtained from the characteristic equation.

Theorem 6.1 Let the Laurent series expansion of G(s) at infinity be

$$G(s) = \frac{1}{s}G_1 + \frac{1}{s^2}G_2 + \dots \tag{6.1}$$

Then, if and only if $G_1$ is non-singular, all asymptotes are of first order with angles

$$\theta_{asymptote} = \mathrm{ARG}\,[-\lambda_i],\ i = 1 \dots m \tag{6.2}$$

where the $\lambda_i$ are the eigenvalues of $G_1$.

Remark If the system is described by state-space matrices (A,B,C), we have $G_1 = CB$.

Theorem 6.1 is not a new result, but the following proof which is based on the Newton polygon technique gives an interesting picture of what is happening. Since we are interested in the behavior of s as $s \to \infty$, substitute $s = 1/z$ in (6.1). This gives

$$G(s) = zG_1 + z^2G_2 + \dots = z(G_1 + zG_2 + \dots) = z\tilde{G}(z) \tag{6.3}$$

where $\tilde{G}(z)$ is a matrix power series in z. Substituting (6.3) in the

characteristic equation, we have

$$\Delta(g,s) = \text{DET}\,[gI - G(s)]$$

$$= g^m - z\,\text{TR}\,\tilde{G}(z)g^{m-1} + z^2\sum\begin{pmatrix}\text{principal minors}\\ \text{of order 2 of } \tilde{G}(z)\end{pmatrix}g^{m-2}$$

$$- \ldots + z^m(-1)^m\,\text{DET}\,\tilde{G}(z) = 0. \tag{6.4}$$

Since $\tilde{G}(z)$ is a matrix power series, all of the coefficients in (6.4) are power series in z. The Newton polygon for (6.4) is drawn in Fig. 6.1, and it is clear that all of the points will lie on or above the line extending from the point (0,m) to the point (m,0). Since the coefficient of $g^m$ is one, the point (m,0) is definitely part of the polygon, and if and only if the constant term of DET $\tilde{G}(z)$ is non-zero, the point (0,m) will also be part of the polygon. In this case, the Newton polygon will be the single line drawn in Fig. 6.1.

Now note that the constant terms of DET $\tilde{G}(z)$, TR $\tilde{G}(z)$, etc. are just DET $G_1$, TR $G_1$, etc., since $\tilde{G}(0) = G_1$ and since the constant terms are obtained by setting z equal to zero. Thus the Newton polygon will be as in Fig. 6.1 if and only if DET $G_1$ is non-zero, i.e. iff <u>$G_1$ is non-singular</u>. We then have

$$g \cong cz \text{ for } (g,z)\to(0,0) \tag{6.5}$$

or equivalently,

$$s \cong -ck \text{ for } (s,k)\to(\infty,\infty) \tag{6.6}$$

where c solves

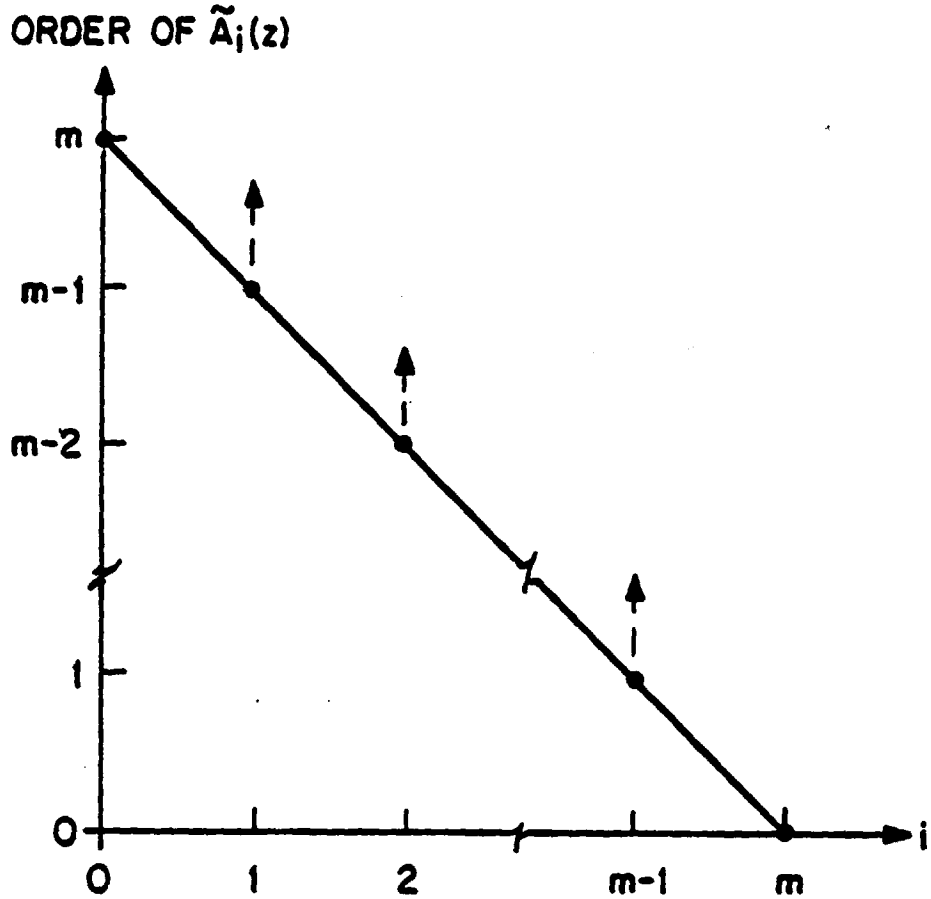


Figure 6.1

Newton Polygon for First-Order Asymptotes

$$c^m - \mathrm{TR}\, G_1 c^{m-1} + \sum \begin{pmatrix}\text{principal minors}\\ \text{of order 2 of } G_1\end{pmatrix} c^{m-2} - \ldots + (-1)^m \,\mathrm{DET}\, G_1$$

$$= \mathrm{DET}\,[cI - G_1] = 0. \tag{6.7}$$

This shows that c is an eigenvalue of $G_1$. Applying the definition of angle to (6.6) concludes the proof.

We now show how the first-order asymptotes and pivots may be obtained directly from the coefficients $A_i(s)$ of the characteristic equation $\Phi(g,s) = 0$.

<u>Theorem 6.2</u> Given the equation

$$\Phi(g,s) = A_m(s)g^m + A_{m-1}(s)g^{m-1} + \ldots + A_o(s) = 0 \tag{6.8}$$

we can write $A_i(s)$ as

$$A_i(s) = \beta_i s^{a_i} + \gamma_i s^{(a_i-1)} + (\underline{\text{lower}}\text{-order terms}),$$
$$i = 0, 1, \ldots m \tag{6.9}$$

and define

$$M \triangleq \{i\colon a_i - i \geq a_j - j,\ \ j = 0, 1, \ldots m\} \tag{6.10a}$$

$$N \triangleq \{i\colon i + 1 \in M\}. \tag{6.10b}$$

Then the first-order asymptotes are given by

$$s_i \cong p_i + c_i k, \quad i = 1 \ldots m \tag{6.11}$$

where the $c_i$ solve

$$\sum_{j \in M} (\beta_j (-1)^j c_i^j) = 0 \tag{6.12}$$

and the pivots $p_i$ are given by

$$p_i = \frac{\sum_{j\in M}\left(\gamma_j(-1)^j c_i^j\right) + \sum_{j\in N}\left(\beta_j(-1)^j c_i^j\right)}{\sum_{j\in M}\left(\beta_j(-1)^j(m-j)c_i^j\right)} . \tag{6.13}$$

<u>Remark</u> The angles of the asymptotes are given by ARG $[c_i]$.

The proof of Theorem 6.2 is straightforward. The first step is to assume that

$$s \approx p + ck, \quad (s,k)\to(\infty,\infty) \tag{6.14}$$

since this is the behavior of interest. Solving for k, we get

$$k \approx \frac{(s-p)}{c} . \tag{6.15}$$

Now substitute $g = -1/k$ in (6.8) and multiply by $k^m$. This gives

$$A_o(s)k^m - A_1(s)k^{m-1} + \ldots + (-1)^m A_m(s) = 0. \tag{6.16}$$

Substituting (6.15) in (6.16) and multiplying by $c^m$ gives

$$A_o(s)(s-p)^m - A_1(s)(s-p)^{m-1}c + \ldots + (-1)^m A_m(s)c^m \approx 0. \tag{6.17}$$

The degree of the $i^{th}$ term on the left side of (6.17) is $(a_i + m - i)$, where the exponents $a_i$ are defined in (6.9). The terms of highest degree are the $j^{th}$ terms, where $j \in M$ and where M is defined in (6.10a). Since the left side of (6.17) is asymptotically equal to zero, the sum of the coefficients of these $j^{th}$ terms must be zero. This yields (6.12). The sum of the coefficients of the terms of degree one less than the highest degree must also be zero. This gives

$$\sum_{j\in M}\left(\gamma_j(-1)^j c_i^j + \beta_j(-1)^j(m-j)(-p)c_i^j\right) + \sum_{j\in N}\left(\beta_j(-1)^j c_i^j\right) = 0 \tag{6.18}$$

and solving for p yields (6.13). This concludes the proof.

## 6.3 An Illustrative Example

In this section we give an example that illustrates the computation of several features of the multivariable root locus.

Example 6.1 Draw the root locus of

$$G(s) = \frac{1}{(s+2)^2}\begin{bmatrix} s & 2s+6 \\ -(s+2) & s+2 \end{bmatrix}$$

Poles and Zeros

We have

$$\Phi(g,s) = (s^2 + 4s + 4)g^2 - (2s+2)g + 3 = 0$$

so there is a double pole at -2 and no finite zeros. Hence there are two asymptotes.

Asymptotes

(i) By inspection, we have

$$G_1 = \begin{bmatrix} 1 & 2 \\ -1 & 1 \end{bmatrix}$$

which has full rank and eigenvalues $1 \pm \sqrt{2}\, j$. Hence, from Theorem 6.1 there are two first-order asymptotes with angles

$$\text{ARG}\,[-1 \pm \sqrt{2}\, j] = 125.3°,\ 234.7°.$$

(ii) By examining the coefficients of $\Phi(g,s)$, we have

$$M = \{0, 1, 2\},\ N = \phi.$$

Using Theorem 6.2, (6.12) becomes

$$c^2 + 2c + 3 = 0$$

which has the solutions $-1 \pm \sqrt{2}\, j$. Therefore the angles of the asymptotes are

$$\text{ARG}\,[-1 \pm \sqrt{2}\, j] = 125.3°,\ 234.7°.$$

Pivots

Again using Theorem 6.2, the pivot for the asymptote with $c = -1 + \sqrt{2}\,j$ is, from (6.13),

$$p = \frac{4(-1 + \sqrt{2}\,j)^2 + 2(-1 + \sqrt{2}\,j)}{2(2 - 1)(-1 + \sqrt{2}\,j) + 3(2 - 0)} = -2 - \frac{\sqrt{2}}{2}j .$$

Note that this number is complex. By symmetry, the other pivot is $-2 + \frac{\sqrt{2}}{2}j$.

Real Axis

Since $m = 2$, we may use Theorem 5.1. We have

$$\text{DET } G(s) = \frac{3}{(s + 2)^2} > 0 \text{ for all } s$$

$$\Delta(s) = -\frac{8s^2 + 40s + 44}{(s + 2)^4} > 0 \text{ for } -3.37 < s < -1.63$$

$$\text{TR } G(s) = \frac{2s + 2}{(s + 2)^2} < 0 \text{ for } s < -1.$$

Hence there are two loci on the real axis for $-3.37 < s < -1.63$, and no loci on the real axis elsewhere.

Branch Points

Since $m = 2$, by using Theorem 4.1, the branch points are solutions of

$$\Delta(s) = -\frac{8s^2 + 40s + 44}{(s + 2)^4} = 0$$

which has the solutions -3.37 and -1.63.

Hence there are branch points at those locations.

Break Points

Theorem 4.4 gives the break points as solutions to the simultaneous equations

$$(s^2 + 4s + 4)g^2 - (2s + 2)g + 3 = 0$$

$$(2s + 4)g^2 - 2g = 0$$

which have the solution $(g_o, s_o) = (-1, -3)$.

Since $g_o$ is real and negative, -3 is a break point. We know from Theorem 4.5 that the angle of the branch breaking in or out will be 90°.

We now have enough information to plot the entire root locus. The root locus plot is given in Fig. 6.2.

## 6.4 Higher-Order Asymptotes

We now review briefly the results of Sastry and Desoer [17] and Shaked and Kouvaritakis [15] on the subject of higher-order asymptotes. Proofs are omitted, since they do not employ the main methodology of this thesis.

In Section 3.5 we adapted the procedure used by Sastry and Desoer in [17], and obtained equations for the angles of arrival and departure which involved solving a generalized eigenvalue problem in a Toeplitz matrix. We now state Sastry and Desoer's original result, which dealt with asymptotes of root loci:

Theorem 6.3 Let the Laurent series expansion of G(s) at infinity be

$$G(s) = \frac{1}{s} G_1 + \frac{1}{s^2} G_2 + \dots \tag{6.19}$$

(i) Then the angles of the $n^{th}$-order asymptotes (if any) are

$$\theta_{\text{asymptote, } n} = \frac{1}{n} \text{ARG } [-\lambda_n] + \frac{j360°}{n}$$

$$j = 0, 1, \dots n - 1; \; n = 1, 2, \dots \tag{6.20}$$

where $\lambda_n$ solves the generalized eigenvalue problem

$$\text{DET} \begin{bmatrix} G_1 & 0 & & 0 \\ G_2 & 0 & & \\ \vdots & \vdots & & \\ G_{n-1} & G_{n-2} & \dots & 0 \\ (G_n - \lambda_n I) & G_{n-1} & \dots & G_1 \end{bmatrix} = 0 \tag{6.21}$$

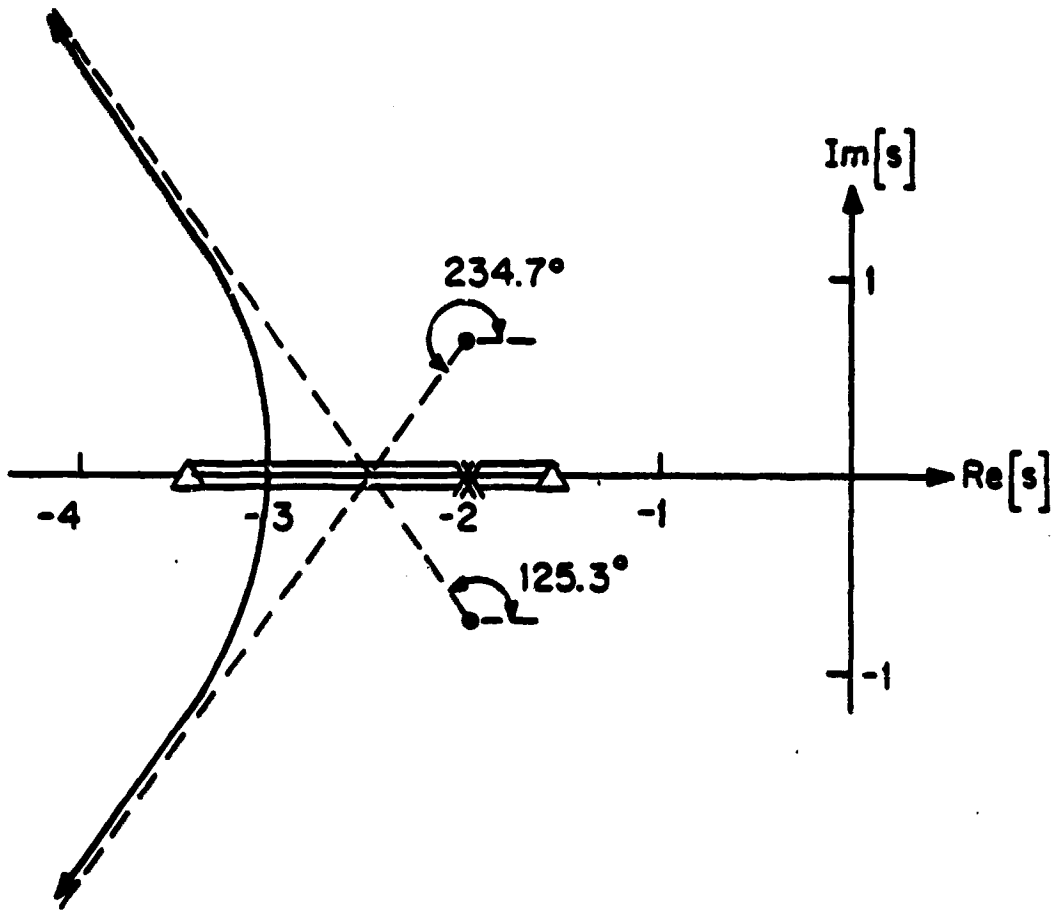


Figure 6.2

Root Locus for Example 6.1

provided this is a polynomial equation in $\lambda_n$.

(ii) If certain matrices $\tilde{G}_i$ obtained from the $G_i$ and defined below in (6.26) have simple null structure, then <u>all</u> of the asymptotes are integer-ordered, and hence are given by (6.20) and (6.21). If this assumption does not hold, then it is possible to have fractional-ordered asymptotes.

(iii) The pivots $c_n$ for the $n^{th}$-order asymptotes may be found by solving

$$\mathrm{DET}\begin{bmatrix} G_1 & 0 & & 0 \\ \vdots & \vdots & & \\ (G_n - \lambda_n I) & G_{n-1} & \cdots & 0 \\ (G_{n+1} - c_n G_n) & (G_n - \lambda_n I) & \cdots & G_1 \end{bmatrix} = 0. \tag{6.22}$$

These results are of course proved in [17], although since virtually the same procedure was used to prove Theorem 3.10, it should not be difficult to see where these results come from.

In [17], Sastry and Desoer interpret these generalized eigenvalue problems as finding the eigenvalues of restricted linear maps. They also consider some ways of simplifying these problems, based on the Toeplitz structure, to facilitate their solution. The interested reader is referred to [17].

Comparing Theorems 6.3 and 3.10, and recalling how Lemma 3.1 linked Theorem 3.10 to the Smith-MacMillan form of G(s), the question arises as to whether there is any relation between the orders of asymptotes and the Smith-MacMillan form. Verghese and Kailath [22] have pointed out that there is indeed a relation: the orders of the asymptotes <u>are</u> the orders of the Smith-MacMillan zeros of G(s) at infinity. The importance of this result is that the asymptotes may be regarded as branches arriving at <u>infinite</u> zeros, so that the angles of the asymptotes are merely the "angles

of arrival" at infinite zeros. In earlier literature on the root locus (e.g. [15]), infinite zeros were considered to be fictitious objects. But they are in fact perfectly well defined from the Smith-MacMillan form at infinity. (For a discussion of the Smith-MacMillan form at infinity, see [23], p. 449.)

The approach taken by Shaked and Kouvaritakis [15] is completely different, and while their results are more thorough, they are also more arduous computationally. In [15] Shaked and Kouvaritakis approach the problem from a state-space perspective, and interpret their results in terms of mappings between spaces defined by the ranks and nullspaces of the Markov parameters $G_i$. We summarize their main results in the following theorem:

<u>Theorem 6.4</u> Let the Laurent series expansion of $G(s)$ at infinity be

$$G(s) = \frac{1}{s} G_1 + \frac{1}{s^2} G_2 + \dots \tag{6.23}$$

and define the <u>projected Markov parameters</u> $\tilde{G}_i$, $i = 1 \dots \nu$ using the following sequence:

$$\tilde{G}_1 = G_1 \tag{6.24}$$

$$\tilde{G}_i = \begin{bmatrix} U_i & M_i \end{bmatrix} \begin{bmatrix} \Lambda_i & 0 \\ 0 & 0 \end{bmatrix} \begin{bmatrix} V_i \\ N_i \end{bmatrix} \tag{6.25}$$

$$\tilde{G}_{i+1} = N_i N_{i-1} \dots N_1 G_{i+1} M_1 M_2 \dots M_i \tag{6.26}$$

where (6.25) is the spectral decomposition of $\tilde{G}_i$, exhibiting its Jordan form; (6.26) is the projection of $G_{i+1}$ onto the nullspaces of $\tilde{G}_1 \dots \tilde{G}_i$; and we have assumed that all of the $\tilde{G}_i$ have <u>simple null structure</u>. The sequence terminates at $i = \nu$ when $\tilde{G}_\nu$ has full rank.

The angles of the $i^{th}$-order asymptotes are then given by

$$\theta_{\text{asymptote},\, i} = \frac{1}{i} \text{ARG}\, [\lambda_{i,j}] + \frac{n360^\circ}{i}, \; n = 0, 1, \dots i - 1;$$
$$j = 1, 2, \dots d_{i-1} - d_i; \; i = 1, 2, \dots \nu \tag{6.27}$$

where $\lambda_{i,j}$ is the $j^{th}$ non-zero eigenvalue of $\tilde{G}_i$ and $d_i$ is the rank deficiency of $\tilde{G}_i$ ($d_o = m$).

Shaked and Kouvaritakis also give an alternative approach that can be used when the simple null structure assumption on the $\tilde{G}_i$ does not hold. Kouvaritakis [24] discusses the use of a constant gain pre-compensator to make the $\tilde{G}_i$ have simple null structure, which reduces the orders of the asymptotes and thus improves gain margins. In [25] Kouvaritakis extends these results to the case of non-proper systems, and in [26] he applies these results to the optimal root loci associated with the linear quadratic regulator problem.

# CHAPTER VII

## Other Results

### 7.1 Introduction

In this chapter we discuss briefly several other results on multivariable root loci that have recently appeared in the literature. Although these results are rather minor, we feel that they are sufficiently interesting to be included in this thesis, since one of the objectives of this thesis is to provide a detailed survey of the properties of multivariable root loci.

We will discuss and prove three main results. First, it will be shown that the SISO root locus rule on the conservation of the sum of the closed-loop poles as the gain k is varied (see Section 2.5, rule (9)) generalizes to the multivariable case. This was first pointed out to us by Levy [27], and proved independently by Byrnes and Stevens [20]. Next, it will be shown how to compute the values of the gain k for which the root loci intersect the imaginary axis. This result is due to Shaked [28]. Finally, it will be shown how graphical bounds on the root loci may be constructed. This result is due to Owens and Field [29].

### 7.2 Results

We now show that the SISO root locus rule (Section 2.5, rule (9)) on the conservation of the sum of the closed-loop poles as the gain k is varied generalizes to the multivariable case.

Theorem 7.1 The sum of the closed-loop poles does not vary with the feedback gain k if and only if there are m infinite zeros, each of which has order not less than two.

Remark . This condition will hold if and only if all of the structure indices of G(s) at infinity are greater than or equal to two.

We prove Theorem 7.1 by writing G(s) as an irreducible right matrix fraction description

$$G(s) = N(s)D(s)^{-1}. \tag{7.1}$$

The open-loop poles are then the solutions to

$$\mathrm{DET}\ [D(s)] = 0 \tag{7.2}$$

(see [23]), and the characteristic equation becomes

$$\Delta(g,s) = \mathrm{DET}\ [gI - G(s)] = \mathrm{DET}\ [I + kG(s)]$$

$$= \frac{\mathrm{DET}\ [D(s) + kN(s)]}{\mathrm{DET}\ D(s)} = 0 \tag{7.3}$$

which may be written as

$$\mathrm{DET}\ [D(s)] + k\sum_{i=1}^{m} \mathrm{DET}\ [D_1 \ldots D_{i-1}, N_i, D_{i+1} \ldots D_m] + \ldots = 0 \tag{7.4}$$

where $D_i$ is the $i^{th}$ column of D(s), and similarly for $N_i$.

Now, DET [D(s)] is a monic polynomial of degree n, and the sum of its roots is minus the coefficient of $s^{n-1}$. If and only if the rest of the terms of (7.4) are polynomials of degree not greater than n - 2, then the sum of the closed-loop poles does not vary with k. We now investigate the circumstances under which this is true.

Let the column degrees of D(s) be $[d_1, \ldots d_m]$, where $d_i$ is the largest of the degrees of the elements of column $D_i$. If we assume that D(s) is column-reduced (see [12]), then we have

$$n = \text{DEG}\,[\text{DET}\,D(s)] = d_1 + d_2 + \ldots + d_m. \tag{7.5}$$

Now, suppose that the column degrees of N(s) are $[n_1, \ldots n_m]$. If we have

$$n_i \leq d_i - 2,\ i = 1, \ldots m \tag{7.6}$$

then the coefficients of all of the powers of k in (7.4) will be of degree not greater than $n - 2$. The condition (7.6) will be satisfied if and only if

$$\lim_{s\to\infty} sG(s) = 0. \tag{7.7}$$

Note that the assumption of D(s) being column-reduced is necessary for (7.6) and (7.7) to be equivalent. However, D(s) may always be made column-reduced by elementary column operations, and these may be included in the MFD (7.1). Both of these results are shown in [12].

Now let the Laurent series expansion of G(s) at infinity be

$$G(s) = \frac{1}{s} G_1 + \frac{1}{s^2} G_2 + \ldots \tag{7.8}$$

From Lemma 3.1 (see also [12], [23]), the number of first-order zeros at infinity is RANK $G_1$. If this is zero, $G_1$ is zero, (7.7) holds, and the result follows.

Byrnes and Stevens [20] prove this result by using a different technique. The importance of this result is that it is a straightforward generalization of the corresponding SISO root locus rule, and as such it is worth noting.

Let us now investigate the values of k for which the root loci intersect the imaginary axis. The importance of this for stability and gain margin should be quite apparent.

<u>Theorem 7.2</u> Let a closed-loop system be described by the state-space formulation (2.2), and let

$$E_i(k) \triangleq \sum \begin{pmatrix} \text{principal minors of} \\ \text{order } i \text{ of } kBKC - A \end{pmatrix}, \quad i = 1 \ldots n. \tag{7.9}$$

Then if n is even the gains k at which root loci intersect the imaginary axis are solutions of the equation

$$\text{DET} \begin{bmatrix} 1 & E_2 & E_4 & \cdot & \cdot & \cdot & E_n & 0 & \cdot & \cdot \\ 0 & 1 & E_2 & \cdot & \cdot & \cdot & E_{n-2} & E_n & \cdot & \cdot \\ \cdot & \cdot & \cdot & \cdot & \cdot & \cdot & \cdot & \cdot & \cdot & \cdot \\ 0 & \cdot & \cdot & 1 & E_2 & E_4 & \cdot & \cdot & E_{n-2} & E_n \\ 0 & \cdot & \cdot & 0 & E_1 & E_3 & \cdot & \cdot & E_{n-3} & E_{n-1} \\ 0 & \cdot & \cdot & E_1 & E_3 & \cdot & \cdot & \cdot & E_{n-1} & 0 \\ \cdot & \cdot & \cdot & \cdot & \cdot & \cdot & \cdot & \cdot & \cdot & \cdot \\ E_1 & E_3 & E_5 & \cdot & \cdot & \cdot & E_{n-1} & 0 & \cdot & \cdot \end{bmatrix} \begin{matrix} \uparrow \\ \\ \frac{n}{2} - 1 \\ \downarrow \\ \uparrow \\ \frac{n}{2} \\ \downarrow \end{matrix} = 0. \tag{7.10}$$

A similar determinantal equation applies if n is odd.

<u>Remark</u> The polynomial equation (7.10) has degree $\frac{n(n-1)}{2}$.

Theorem 7.2 plays the same role in the multivariable case that the Routh-Hurwitz criterion does in the SISO case, i.e. it can be used for finding the gains at which the system becomes unstable. In fact, (7.10) can be viewed as a multivariable generalization of a Routh-Hurwitz array.

The proof of Theorem 7.2 is simple. We may write the characteristic equation in <u>s</u> as

$$\Delta(k,s) = \text{DET}\,[sI - A + kBKC] = s^n + \sum_{i=1}^{n} E_i(k)s^{n-i} = 0. \tag{7.11}$$

Letting $s = j\omega$ and setting both the real and imaginary parts of (7.11) equal to zero gives

$$\omega^n + \sum_{i=1}^{\frac{n}{2}} (-1)^i E_{2i}(k)\omega^{n-2i} = 0 \tag{7.12a}$$

$$\sum_{i=1}^{\frac{n}{2}} (-1)^i E_{2i-1}(k)\omega^{n-2i+1} = 0 \tag{7.12b}$$

if n is even and

$$\omega^n + \sum_{i=1}^{\frac{(n-1)}{2}} (-1)^i E_{2i}(k)\omega^{n-2i} = 0 \tag{7.13a}$$

$$\sum_{i=1}^{\frac{(n+1)}{2}} (-1)^i E_{2i-1}(k)\omega^{n-2i+1} = 0 \tag{7.13b}$$

if n is odd. Letting $z = -\omega^2$ and using the resultant (see Appendix) to find values of k that will allow (7.12a,b) to have a simultaneous solution yields (7.10).

Of course, we only need to search for positive real roots of (7.10), which simplifies matters considerably. In [28] Shaked noted that all positive real roots of (7.10) correspond to one of the following: the desired critical gains; the zeros of (7.10) that are symmetric with respect to the imaginary axis (a rare occurrence); and the loci passing through the origin.

We now show how graphical bounds for the root loci may be computed. These may be useful if we desire only to have an approximate idea of where the loci are located (e.g. left half-plane versus right half-plane, for stability).

<u>Theorem 7.3</u> Again using the state-space formulation (2.2), suppose there exists some real constants a, b such that

$$E(a,b) \triangleq \begin{bmatrix} aBKC & bBKC \\ -bBKC & aBKC \end{bmatrix} \geq 0. \tag{7.14}$$

Then the root locus lies entirely in the region

$$R = \{s: \ RE[s(a - jb)] \leq \lambda(a,b)\} \tag{7.15}$$

where $\lambda(a,b)$ is the largest eigenvalue of the Hermitian matrix

$$H(a,b) \triangleq \tfrac{1}{2}(a - jb)A + \tfrac{1}{2}(a + jb)A^T. \tag{7.16}$$

<u>Remark</u> Note that $(a,b) = (1,0)$ implies that the closed-loop system is <u>stable</u> for <u>all</u> gains if all of the eigenvalues of $\tfrac{1}{2}(A + A^T)$ are negative.

The following proof of Theorem 7.3 is borrowed from [29]. The characteristic equation (7.11) may be restated as

$$(sI - A + kBKC)x(k) = 0 \tag{7.17}$$

where $x(k)$ is a non-zero n-vector with Hermitian transpose $x^H(k)$, and where $x^H(k)x(k)$ is normalized to unity. Premultiplying (7.17) by $x^H(k)$ yields

$$s(k) - x^H(k)Ax(k) = -kx^H(k)BKCx(k) \tag{7.18}$$

and multiplying (7.18) by $(a - jb)$, taking real parts, and writing

$$x(k) = u + jv \tag{7.19}$$

yields

$$RE\ [(a - jb)s(k)] - x^H(k)H(a,b)x(k) = -k[u^T\ v^T]E(a,b)\begin{bmatrix} u \\ v \end{bmatrix}. \tag{7.20}$$

Since $H(a,b)$ is Hermitian and since $E(a,b) \geq 0$, we have

$$\begin{aligned} RE\ [(a - jb)s(k)] \leq x^H(k)H(a,b)x(k) &\leq \max_x\ [x^H H(a,b)x] \\ &= \lambda(a,b) \end{aligned} \tag{7.21}$$

which proves Theorem 7.3. In [29] Owens and Field refine this result further,

giving simpler conditions for $E(a,b) \geq 0$, and discuss several applications. Plotting the bounds for several values of a and b can give a considerable amount of information on the whereabouts of the root loci.

In [30] Brockett and Byrnes discuss the asymptotic behavior of multivariable root loci from a geometric perspective. They consider the case where G(s) is non-square, and the case where the polynomial gain

$$K(k) = K_o + K_1 k + \ldots + K_d k^d \tag{7.22}$$

is applied to the closed-loop system in place of the gain kI. It so happens that if G(s) is non-degenerate, the asymptotic behavior is determined solely by the highest-order term $K_d k^d$, even if $K_d$ does not have full rank. G(s) is non-degenerate if and only if at least one closed-loop pole becomes infinite for any K(k) with d non-zero as $k \to \infty$. If G(s) is pxm and has MacMillan degree n, non-degeneracy is generic if $mp \leq n$. However, diagonal and block-diagonal transfer function matrices are degenerate.

Brockett and Byrnes also show that if $K_d$ has full rank then the closed-loop poles that remain finite approach the open-loop finite zeros as $k \to \infty$. However, both this result and the previous result depend heavily on the non-degeneracy of G(s). For proofs and more details the reader is referred to [30].

# CHAPTER VIII

## Conclusion

In this thesis the properties of multivariable root loci have been analyzed from a frequency-domain point of view. The behavior of the angles of arrival and departure has been studied in considerable detail, and several methods of computing them have been presented. The problems of locating the break-in and break-out points and of characterizing the number of loci on the real axis, previously unexamined in the multivariable case, have also been addressed. Some methods for computing angles and pivots for first-order asymptotes have been given, and results for higher-order asymptotes have been reviewed. At all times our objective has been to generalize the SISO root locus rules to the multivariable case, and as often as not such generalizations were found to exist.

In Chapter III the angles of arrival and departure were analyzed using several different approaches. First, the state-space results of Shaked and Thompson were reviewed. Next, the general case of multiple poles and zeros was analyzed using the Smith-MacMillan form of G(s), and equations for the angles derived. It was found that the angles are grouped into Butterworth patterns with orders given by the MacMillan indices of G(s) at the pole or zero in question, subject to certain conditions. Thus, in the most general case, the angles of arrival and departure are far more complicated for multivariable systems than they are for SISO systems.

We then specialized to the case of "simple" multiple poles and zeros, and found in this case that the SISO rules <u>do</u> generalize to the multivariable case. The reason for this is that <u>non</u>-simple poles and zeros have no

counterparts in the SISO case, so we can hardly expect SISO results to generalize to them. In fact, throughout this thesis, most of the failures of SISO root locus rules to generalize to the multivariable case can be traced to the presence of features not found in SISO systems (e.g. non-simple poles and zeros, branch points, multiple loci on the real axis, etc.). Finally, the results of Sastry and Desoer on asymptotes, which involve solving generalized eigenvalue problems in Toeplitz matrices, were adapted to find angles of arrival and departure.

The results of Chapter III were all conditioned on several generic assumptions. However, with the exception of the first-order case, we were not able to relate these assumptions to each other and show that they are equivalent. More work needs to be done in this area, especially for the results derived from the Smith-MacMillan form. The cases where the assumptions do not hold should also be investigated. Reviewing the non-generic behavior of asymptotes (e.g. fractional orders; see [15]) should be a useful guide in this endeavor.

In Chapter IV the effect of branch points on loci on the real axis was examined. The "turnaround" behavior of loci at a branch point was considered in some detail. It was also shown that the SISO rules for break-in and break-out points generalize directly to the multivariable case. Some methods for computing both types of points, involving the resultant, were also presented.

One feature of the multivariable root locus that definitely needs further investigation is the peculiar behavior that seems to be associated with branch points and branch cuts (see [5], p. 64). In this thesis we investigated only one small aspect of this issue. A characterization and a

physical interpretation of this behavior would be of great help for understanding and plotting the multivariable root locus, but achieving this will apparently be difficult. An interpretation of the branch points in terms of the state-space matrices (A, B, C) would also be useful. In contrast, there seems to be little additional work that needs to be done on break points, except for finding easier ways of computing them.

Multivariable root loci on the real axis were discussed in Chapter V. It was shown that, unlike in the SISO case, knowledge of poles and zero locations alone is insufficient for determining how many loci lie on the real axis at a given point. The reason for this is that in the multivariable case several loci can lie on the real axis at a given point, whereas in the SISO case only one branch can lie on the real axis at a given point. An equation for the number of loci on the real axis at any point was derived. This equation requires only the computation of a few quantities involving the poles, zeros, and branch points on the real axis. A simplification of this equation would be helpful, but there are no evident approaches to take. There remains also the problem of extending this equation to the case of non-simple higher-order poles and zeros on the real axis, without bringing in the Smith-MacMillan results which, in our opinion, would make the general equation too cumbersome to be useful.

The asymptotic behavior of root loci was the subject of Chapter VI. Two methods of computing the angles of first-order asymptotes were given, as well as a method for computing the pivots of such asymptotes. It should again be noted that pivots in the multivariable case may be complex. Previous results on higher-order asymptotes were briefly reviewed, mostly for the sake of completeness. In the context of the methodology of this

thesis, there seems to be little additional work to be done here. However, there are many unanswered questions in the subject of higher-order asymptotes, particularly in cases where generic assumptions do not hold. Even the orders of the asymptotes are uncertain in some of these cases.

In the SISO case the root locus is a handy tool for designing lead-lag compensators. It is well-known, for example, that introducing a zero to the left of a branch tends to "pull" the branch toward the zero. A study of how these SISO tendencies generalize to the multivariable case would be very helpful. Of course, this is a very complex subject, but the results may prove to be worthwhile. For example, it might be possible to introduce a branch point and "turn around" an unstable asymptote. It is hoped that the results of this thesis will be helpful in studying the effects on the root locus of the introduction of poles, zeros, and branch points in various locations.

## REFERENCES


1. Postlethwaite, I., and MacFarlane, A.G.J., A Complex Variable Approach to the Analysis of Linear Multivariable Feedback Systems, Lecture Notes in Control and Information Sciences, No. 12, Springer-Verlag, N.Y., 1979.

2. MacFarlane, A.G.J., and Postlethwaite, I., "The Generalized Nyquist Stability Criterion and Multivariable Root Loci", Int. J. Control, 1977, Vol. 25, No. 1, pp. 81-127.

3. Postlethwaite, I., "The Asymptotic Behavior, the Angles of Departure, and the Angles of Approach of the Characteristic Frequency Loci", Int. J. Control, 1977, Vol. 25, No. 5, pp. 677-695.

4. Bliss, G.A., Algebraic Functions, Dover, N.Y., 1966.

5. Thompson, P., Linear State Feedback, Quadratic Weights, and Closed-Loop Eigenstructures, Laboratory for Information and Decision Systems, M.I.T., LIDS-TH-916, June 1979.

6. Walker, R.J., Algebraic Curves, Springer-Verlag, N.Y., 1979.

7. Dorf, R.C., Modern Control Systems, Addison-Wesley, Reading, MA, 1974.

8. D'Azzo, J., and Houpis, C., Feedback Control System Analysis and Synthesis, McGraw-Hill, N.Y., 1966.

9. Shaked, U., "The Angles of Departure and Approach of the Root Loci in Linear Multivariable Systems", Int. J. Control, 1976, Vol. 23, No. 4, pp. 445-457.

10. Rosenbrock, H.H., State Space and Multivariable Theory, Thomas Nelson and Sons Ltd., London, 1970.

11. Gantmacher, F.R., Theory of Matrices I & II, Chelsea, New York, 1959.

12. Verghese, G.C., and Kailath, T., "Rational Matrix Structure", Preprint, M.I.T., 1980.

13. Van Dooren, P.M., Dewilde, P., and Vandewalle, J., "On the Determination of the Smith-MacMillan Form of a Rational Matrix from its Laurent Expansion", IEEE Trans. Circuits and Systems, Vol. CAS-26, No. 3, March 1979.

14. Evans, W.R., Am. Inst. Elect. Electron. Engrs., Vol. 67, p. 547, 1948.

15. Kouvaritakis, B., and Shaked, U., "Asymptotic Behavior of Root-Loci of Linear Multivariable Systems", Int. J. Control, Vol. 23, No. 3, pp. 297-340, 1976.

16. Owens, D.H., "Dynamic Transformations and Calculation of Multivariable Root Loci", Int. J. Control, 1978, Vol. 28, No. 3, pp. 333-343.

17. Sastry, S.S., and Desoer, C.A., "Asymptotic Unbounded Root Loci - Formulae and Computation", Preprint, M.I.T., 1980.

18. Postlethwaite, I., "Association Between Branch Points and Stationary Points on the Gain and Frequency Surfaces", Int. J. Control, 1979, Vol. 29, No. 2, pp. 255-260.

19. Levy, B., "Asymptotic Root-Locus Behavior Under Output Feedback", M.I.T., 1980.

20. Byrnes, C.I., and Stevens, P.K., "The MacMillan and Newton Polygons of a Feedback System and the Construction of Root Loci", Preprint, Harvard University, 1981.

21. Wonham, W. M., Linear Multivariable Control: A Geometric Approach, Springer-Verlag, Berlin, 1974.

22. Verghese, G., and Kailath, T., "Comments on 'On Structural Invariants and the Root-Loci of Linear Multivariable Systems'", Int. J. Control, 1979, Vol. 29, No. 6, pp. 1077-1080.

23. Kailath, T., Linear Systems, Prentice-Hall, Englewood Cliffs, N.J., 1980.

24. Kouvaritakis, B., "Gain Margins and Root Locus Asymptotic Behavior in Multivariable Design", Int. J. Control, 1978, Vol. 27, No. 5, pp. 705-751.

25. Kouvaritakis, B., "Asymptotic Multivariable Root-Locus Behavior for Non-Proper Systems", Int. J. Control, 1978, Vol. 28, No. 3, pp. 419-440.

26. Kouvaritakis, B., "Optimal Root Loci of Linear Multivariable Systems", Int. J. Control, 1978, Vol. 28, No. 1, pp. 33-62.

27. Levy, B., private communication, 1981.

28. Shaked, U., "The Intersection of the Root-Loci of Multivariable Systems with the Imaginary Axis", Int. J. Control, 1977, Vol. 25., No. 4, pp. 603-607.

29. Owens, D.H., and Field, A.D., "Graphical Bounds for the Root-Loci of Linear Multivariable Systems", Int. J. Control, 1980, Vol. 31, No. 4, pp. 709-722.

30. Brockett, R.W., and Byrnes, C.I., "Multivariable Nyquist Criteria, Root Loci, and Pole Placement: A Geometric Viewpoint", Preprint, Harvard University, 1980.

# APPENDIX

## The Resultant

The resultant is a method for determining whether two polynomial equations have a common zero. It is constructed as follows. Let

$$a(x) = a_o + a_1 x + \ldots + a_n x^n \tag{A.1}$$

$$b(x) = b_o + b_1 x + \ldots + b_m x^m \tag{A.2}$$

be two polynomials. Then a(x) and b(x) have a common non-constant factor if and only if

$$\mathrm{DET}\begin{bmatrix} a_o & a_1 & a_2 & \cdot & \cdot & \cdot & a_n & 0 & \cdot & \cdot & \cdot & 0 \\ 0 & a_o & a_1 & \cdot & \cdot & \cdot & a_{n-1} & a_n & 0 & \cdot & \cdot & 0 \\ \cdot & \cdot & \cdot & \cdot & \cdot & \cdot & \cdot & \cdot & \cdot & \cdot & \cdot & \cdot \\ 0 & \cdot & \cdot & 0 & a_o & a_1 & \cdot & \cdot & \cdot & \cdot & a_{n-1} & a_n \\ 0 & \cdot & \cdot & \cdot & \cdot & 0 & b_o & b_1 & \cdot & \cdot & b_{m-1} & b_m \\ 0 & \cdot & \cdot & \cdot & 0 & b_o & b_1 & \cdot & \cdot & \cdot & b_m & 0 \\ \cdot & \cdot & \cdot & \cdot & \cdot & \cdot & \cdot & \cdot & \cdot & \cdot & \cdot & \cdot \\ b_o & b_1 & b_2 & \cdot & \cdot & b_{m-1} & b_m & 0 & \cdot & \cdot & \cdot & 0 \end{bmatrix} \begin{matrix} \uparrow \\ m \\ \text{rows} \\ \downarrow \\ \uparrow \\ n \\ \text{rows} \\ \downarrow \end{matrix} = 0. \tag{A.3}$$

This result is proved in Walker [6] as follows. Suppose that a(x) and b(x) have a common non-constant factor (x - p). Then we may write

$$a(x) = c(x)(x - p) \tag{A.4}$$

$$b(x) = d(x)(x - p) \tag{A.5}$$

where

$$c(x) = c_o + c_1 x + \ldots + c_{n-1} x^{n-1} \tag{A.6}$$

$$d(x) = d_o + d_1 x + \ldots + d_{m-1} x^{m-1} \tag{A.7}$$

have degrees one less than those of a(x) and b(x), respectively. We may combine (A.4) and (A.5) into

$$d(x)a(x) - c(x)b(x) = 0 \tag{A.8}$$

and substituting (A.1), (A.2), (A.6), and (A.7) into (A.8) and setting the coefficients equal to zero yields

$$d_o a_o - c_o b_o = 0 \tag{A.9a}$$

$$d_o a_1 + d_1 a_o - c_o b_1 - c_1 b_o = 0 \tag{A.9b}$$

$$\vdots$$

$$d_{m-1} a_n - c_{n-1} b_m = 0 \tag{A.9c}$$

which may be written as

$$[d_o, d_1, \ldots d_{m-1}, -c_{n-1}, -c_{n-2}, \ldots -c_o]$$

$$x \begin{bmatrix} a_o & a_1 & a_2 & \cdot & \cdot & \cdot & a_n & 0 & \cdot & \cdot & 0 \\ 0 & a_o & a_1 & \cdot & \cdot & \cdot & a_{n-1} & a_n & \cdot & \cdot & 0 \\ \cdot & \cdot & \cdot & \cdot & \cdot & \cdot & \cdot & \cdot & \cdot & \cdot & \cdot \\ 0 & \cdot & 0 & a_o & a_1 & \cdot & \cdot & \cdot & \cdot & a_{n-1} & a_n \\ 0 & \cdot & \cdot & \cdot & \cdot & 0 & b_o & b_1 & \cdot & \cdot & b_m \\ 0 & \cdot & \cdot & \cdot & 0 & b_o & b_1 & b_2 & \cdot & b_m & 0 \\ \cdot & \cdot & \cdot & \cdot & \cdot & \cdot & \cdot & \cdot & \cdot & \cdot & \cdot \\ b_o & b_1 & b_2 & \cdot & \cdot & \cdot & \cdot & b_m & 0 & \cdot & 0 \end{bmatrix} = 0. \tag{A.10}$$

Equation (A.10) will have a non-zero solution if and only if (A.3) holds. This completes the proof.

An important application of the resultant is determining whether a polynomial equation has a multiple root. This issue arises in Chapter IV, since branch points and break points are multiple roots of $\Phi(g,s) = 0$. To determine whether $a(x) = 0$ has a multiple root, simply choose $b(x) = \frac{d}{dx} a(x)$. The left side of (A.3) then becomes the <u>discriminant</u> of $a(x)$. For quadratic $a(x)$,

$$a(x) = ax^2 + bx + c = 0 \tag{A.11}$$

(A.3) becomes

$$\mathrm{DET}\begin{bmatrix} c & b & a \\ b & 2a & 0 \\ 0 & b & 2a \end{bmatrix} = -a(b^2 - 4ac) = 0 \tag{A.12}$$

the familiar discriminant for the general quadratic equation. For the reduced cubic equation,

$$a(x) = x^3 + px + q = 0 \tag{A.13}$$

(A.3) becomes

$$\mathrm{DET}\begin{bmatrix} q & p & 0 & 1 & 0 \\ 0 & q & p & 0 & 1 \\ p & 0 & 3 & 0 & 0 \\ 0 & p & 0 & 3 & 0 \\ 0 & 0 & p & 0 & 3 \end{bmatrix} = 27q^2 + 4p^3 = 0 \tag{A.14}$$

which is also well-known.

To aid in the computation of branch points for three-input-three-output ($m = 3$) systems, the resultant for the general cubic equation

$$x^3 + bx^2 + cx + d = 0 \tag{A.15}$$

is

$$\Delta = 18bcd - 4b^3d + b^2c^2 - 4c^3 - 27d^2. \tag{A.16}$$