NASA

Technical Memorandum 82072

# An Introduction to Magnetospheric Physics by Means of Simple Models

David P. Stern

(NASA-TM-82072) AN INTRODUCTION TO MAGNETOSPHERIC PHYSICS BY MEANS OF SIMPLE MODELS (NASA) 53 p HC A04/MF A01 CSCL 04A

N81-24648

Unclas

G3/46 25762

JANUARY 1981

RECEIVED NASA STI FACILITY ACCESS DEPT.

National Aeronautics and Space Administration

**Goddard Space Flight Center**
Greenbelt, Maryland 20771

# An Introduction to Magnetospheric Physics by Means of Simple Models

David P. Stern
Planetary Magnetospheres Branch
Goddard Space Flight Center
Greenbelt, Maryland 20771

January, 1981

Abstract

An introductory review of the large-scale structure and behavior of the Earth's magnetosphere is presented, suitable for inclusion in courses dealing with space physics, plasmas, astrophysics or the Earth's environment, as well as for self-study. The exposition is guided by a series of 9 quantitative problems, dealing with properties of linear superpositions of a dipole and a constant field. Topics covered include open and closed models of the magnetosphere, field line motion, the role of magnetic merging ("reconnection"), magnetospheric convection and the origin of the magnetopause, polar cusps and high latitude lobes. References and directions which may guide readers to more recent developments are also given.

## Preface

The last 20 years have seen considerable progress in our understanding of the Earth's magnetosphere, the region in which the Earth's magnetic field reacts with the solar wind and the interplanetary magnetic field. Only occasionally, however, has magnetospheric physics appeared in courses on astrophysics, geophysics or plasma physics.

This article presents an elementary overview of the large-scale interactions of the magnetosphere, in a format suitable for inclusion in such a course or for self-study. To illustrate the coupling between the magnetosphere and its surrounding medium, a family of simple fields is used -- the fields formed by the superposition of a magnetic dipole and a constant magnetic field. Three points are given special attention:

(1) The subjects considered are of global scope, involving the entire magnetosphere and its coupling to the solar wind. They prepare the ground for any more detailed study of magnetospheric physics and at the same time also illustrate basic notions such as magnetic field line motion, merging and convection.

(2) Connections between some of the ideas described and more recent research are outlined, and references are given for further exploration of various avenues. The added material is mainly for readers who already have some familiarity with the subject and much of it may be skipped in an introductory study.

(3) The great virtue of the simple models used here is that many of their properties may be derived analytically. Several such calculations are included and they may be performed in class or assigned as homework (problems 1, 3 and 4 should be solved when they are encountered, since their results are used inthe text that follows them). The only prerequisites are some basic knowledge of electromagnetic theory and of guiding center motion.

Since about the year 1000, when the compass was invented, it has been known that the Earth has a magnetic field. This field appears to be produced by electric currents in the Earth's core and can be viewed to a good approximation as a dipole, very nearly aligned with the Earth's rotation axis. Since the dipole component falls off with distance at an $r^{-3}$ rate which is slower than that of other internal components, the dipole approximation of the internal field improves with increasing distance from Earth and will be used in all that follows.

The geomagnetic field can also be described by magnetic field lines ("lines of force") which, from the basic definition of magnetic polarity, rise from the Earth near the southern magnetic pole and re-enter near the northern one (Figure 1). This polarity, incidentally, has undergone many reversals during the Earth's geological history, most recently $\sim$ 700,000 years ago, and it is also opposed to the one observed in the fields of Jupiter and Saturn.

The dipole field $\underline{B}_d$ may be represented by a scalar potential $\gamma$

$$\underline{B}_d = - \nabla\gamma \qquad (1)$$

and for the geomagnetic dipole, in spherical coordinates $(r,\theta,\varphi)$

$$\gamma = - a\, B_e \cos\theta\, (a/r)^2 \qquad (2)$$

where $a$ is the Earth's radius and $B_e \sim 30{,}000$ nT (nanotesla, i.e. $B_e$ is equivalent to 0.3 gauss) is the equatorial intensity at $r=a$. Alternatively, $\underline{B}_d$ may also be described in terms of Euler potentials[1] $(\alpha,\beta)$

$$\underline{B}_d = \nabla\alpha \times \nabla\beta \qquad (3)$$

where

$$\alpha = - a\, B_e\, (a/r) \sin^2\theta \qquad (4a)$$

$$\beta = a\varphi \qquad (4b)$$

This representation tends to be difficult to derive unless the field is

axially symmetric, but it has the advantage of giving an explicit representation of magnetic field lines: since

$$\underline{B}.\nabla\alpha = \underline{B}.\nabla\beta = 0 \qquad (5a)$$

it follows that each such line is characterized by parametric equations of the form

$$\alpha(x,y,z) = \text{const.} \qquad \beta(x,y,z) = \text{const.} \qquad (5b)$$

At large distances the Earth's field becomes negligibly small in comparison with the interplanetary magnetic field (IMF) which, because of its large scale (compared to a), will be assumed to be a constant field $\underline{B}_o$. The IMF is of solar origin and is carried away from the Sun by the action of the solar wind (SW), a steady radial outflow of hot plasma from the Sun's corona. At the Earth's orbit a typical velocity for the solar wind is $v = 300$ km/s and a typical density is $n = 10\ cm^{-3}$: for convenience, a local cartesian frame will be used in which the x axis points sunward and the northward half of the dipole axis will be assumed to coincide with the positive z axis. Actually, the angle between the dipole and the sunward direction may be as much as $35^o$ out of the perpendicular, because the Earth's rotation axis is not perpendicular to the ecliptic and is also inclined to the dipole axis, but this complication will be neglected here.

A typical magnitude for the interplanetary field $\underline{B}_o$ is around 5 nT, and due to the nature of the interaction between the SW and the IMF (see further below) $B_{ox} \approx -B_{oy}$, while $B_{oz}$ tends to be smaller than either of the other components. In what follows, however, $\underline{B}_o$ will not be constrained.

As an approximation of fields which tend to $\underline{B}_d$ as $r \to 0$ and to $\underline{B}_o$ as $r \to \infty$, we shall study simple superpositions of the two fields

$$\underline{B} = \underline{B}_d + \underline{B}_o \qquad (6)$$

It turns out that such combined fields divide space quite naturally into 2 regions -- an inner region dominated by $\underline{B}_d$, which will be named

(following Gold[2]) the magnetosphere, and an outer region dominated by $\underline{B}_o$. Many important features are not reproduced by such crude models, including the collision-free bow shock created in the SW at a distance $\sim 2a$ upstream of the magnetosphere: the values of v and n cited above are indeed more appropriate to the region behind the shock, while ahead of it v tends to be larger and n smaller.

Furthermore, contributions to $\underline{B}$ from electric currents flowing in the magnetosphere are ignored, including those from the long current sheet stretching the magnetospheric "tail" on the night side (Figure 2), and many plasma processes are grossly simplified. Nevertheless (as will be seen) many basic phenomena are illustrated quite well at this level.

## The Closed Model

Consider first the possibility of a purely northward IMF

$$\underline{B}_o = B_o \hat{\underline{z}} \tag{7}$$

$\underline{B}_o$ may be represented by a scalar potential $\gamma_o$

$$\gamma_o = - B_o z \tag{8}$$

or also by axisymmetrical Euler potentials

$$\alpha = (aB_o/2)\ (r/a)^2 \sin^2\theta \tag{9}$$

$$\beta = a\varphi \tag{10}$$

The scalar potential for the combined field is obtained by superposition

$$\gamma = \gamma_o + \gamma_d \tag{11}$$

For Euler potentials, in general, superposition does not work, but if (as here) two fields share the same $\beta$, a superposition of $\alpha$ gives a correct result. Thus in the present model

$$\underline{B} = \nabla\alpha \times \nabla\beta \tag{12}$$

$$\alpha = a \sin^2\theta \, [(B_o/2)(r/a)^2 - B_e(a/r)] \tag{13a}$$

$$\beta = a\varphi \tag{13b}$$

PROBLEM 1 :

(a) Show that the surface $\alpha=0$ is a sphere of radius $r_o = a\,(2B_e/B_o)^{1/3}$ (Where else in space does $\alpha$ vanish?). By (5a), $\underline{B}$ is everywhere tangential to this sphere, hence it completely encloses the dipole (Figure 3). Show by means of (11) that $B_r=0$ on $r = r_o$.

(b) Show by means of (11) that $\underline{B}$ vanishes only at two points, located at the intersections between the sphere and the z axis. Points at which $\underline{B}=0$ are termed neutral points.

This model will be called "dipole in sphere"; the sphere naturally forms the boundary of the magnetosphere or magnetopause and, at least on the side facing the Sun, resembles the boundary actually observed. The observed distance to the magnetopause ($\sim$ 10a) is somewhat smaller than $r_o$ derived here, because the pressure of the solar wind plasma, which has been ignored, pushes the boundary further earthwards. This generally also produces a finite current flow along the boundary.

The "dipole in sphere" is the archtype of closed models of the magnetosphere which assume a completely enclosing magnetopause through which no field lines pass. It bears some resemblance to Hill's spherical vortex in ideal fluid dynamics and to a two-dimensional model of plasma filaments studied by Schindler[3]. In the magnetospheric context it was discussed at least as early as 1959[4], and a more realistic "closed" model was advanced in 1960 by F. Johnson[5], who has presented arguments in favor of a

variant of the "closed" magnetosphere as recently as 1978[6].

The "dipole in sphere" can be modified to accomodate any direction of $\underline{B}_o$. If for instance $\underline{B}_o$ shifts to the direction of the unit vector $\underline{b}$, it is only necessary to rotate the external field pattern of Figure 3 until its asymptotic direction lies along $\underline{b}$. Or in other words, one then defines a new system of spherical coordinates with the polar axis along $\underline{b}$ and then assumes that the potential $\gamma$ of (11)

$$\gamma = -a\, B_e \cos\theta\, (a/r)^2 - B_o\, r \cos\theta \qquad (14)$$

is given in the old system for $r<r_o$ and in the new one for $r>r_o$. At $r=r_o$ the field is discontinuous, indicating a current flow along the magnetopause, but as was already noted, such currents indeed occur in nature. An example of such a closed model, with $\underline{b} = \underline{\hat{x}}$, is given in Figure 4.

Closed models will be further discussed below, but at this point we shift our attention to the outer region with $r>r_o$ and in particular to the question, how can the existence of the IMF be reconciled with the flow of the SW.

## The Electric Field

Far from the origin both the magnetic field and the SW velocity have their undisturbed interplanetary values

$$\underline{B} = B_o\hat{\underline{z}} \qquad \underline{v} = -v_o\hat{\underline{x}} \qquad (15)$$

Suppose first that at any point all charged particles of the SW have the same velocity. How then can they make any headway in a direction orthogonal to $\underline{B}$, rather than be forced into tight little spirals around the z axis? The answer is that an electric field $\underline{E}$ is set up

$$\underline{E} = -\underline{v} \times \underline{B} \qquad (16)$$

so that the magnetic force $q(\underline{v}\times\underline{B})$ on any particle with charge q is completely cancelled by the electric force $q\underline{E}$, allowing the particle to proceed undisturbed along the x axis (for details about how $\underline{E}$ is set up, see for instance chapt. 4 of the text by Longmire[7]). More precisely, eq. 16, also called the "magneto-hydrodynamic (MHD) condition" must be modified to include non-electromagnetic forces (e.g. gravity) and terms representing accelerations, but all added terms are generally negligible under the conditions encountered here, save perhaps in regions very close to a neutral point (see further below). The MHD condition only gives the component of $\underline{E}$ orthogonal to $\underline{B}$; it is customary to add the requirement

$$E_{\parallel} = 0 \qquad (17)$$

since charges generally can easily slide along magnetic field lines and thus equalize any potential difference which violates (17). Thus (16) indeed gives the total electric field, and by (15)

$$\underline{E} = -\nabla\Phi \qquad (18a)$$

$$\Phi = yv_oB_o \qquad (18b)$$

If SW particle velocities cover a finite range, the two above forces in

general do not balance. The situation may then be viewed in the frame of the SW, in which the (non-relativistic) local electric field vanishes by (16): in that frame most particles have a small residual velocity and thus carry out some small-scale gyration, but apart from this they share the velocity $v_0$ of the frame. Or else, viewed from the frame of the Earth, guiding center theory (7) requires that all particles (regardless of charge) share an electric drift

$$\underline{v}_{drift} = (\underline{E}\times\underline{B})/B^2 \qquad (19)$$

which satisfies (16). From either point of view, the bulk velocity of the plasma remains the same.

This constant rectilinear velocity is modified, however, in the vicinity of $r=r_0$. Intuitively, one would expect the flow to divide up in the manner of Figure 4, where now the lines outside $r=r_0$ are regarded as streamlines rather than as magnetic field lines. To see whether this indeed happens, one proceeds as follows.

The electric potential $\Phi$ can be viewed as a function of $(x,y,z)$, or equivalently of 3 independent functions of $(x,y,z)$: let two such functions be $(\alpha,\beta)$ of (13). For the third one could take s, the distance along a field line to the point in question, measured (say) from the plane $z=0$: the exact choice is immaterial, in any case, for by (17)

$$\underline{B}.\nabla\Phi = 0 \qquad (20)$$

It then follows from (5a) that no matter what the third coordinate is, $\Phi$ does not depend on it but on $(\alpha,\beta)$ alone. This of course is consistent with $\Phi$ being constant along a field line, as implied by (17).

In order to find the electric potential near $r=r_0$ (and from it, through eq. 19, the bulk velocity) it is thus sufficient to evaluate the function $\Phi(\alpha,\beta)$ far away from the origin and then propagate it along field lines to regions closer to the dipole. At large distances the second term of (13a) may be neglected, leaving

$$\alpha = (B_0/2a)(x^2+y^2) = (B_0/2a)\, y^2/\sin^2(\beta/a) \qquad (21)$$

From (18b) then

$$\Phi(\alpha,\beta) = v_0\, (2aB_0)^{1/2}\, \alpha^{1/2} \sin(\beta/a) \qquad (22)$$

If (22) is valid at any one point on a field line, it is valid anywhere else on it, and it will therefore also give $\Phi$ near $r=r_0$, provided the full expression (13a) is used for $\alpha$. It is now straightforward to derive $\underline{E}$ and then use (19) to find the flow velocity at any point in the field. If only flow lines are required, however, a faster procedure exists, since (19) implies

$$\underline{v}.\nabla\gamma = 0 \qquad (23)$$

$$\underline{v}.\nabla\Phi = 0 \qquad (24)$$

Hence streamlines are characterized by lines along which $\gamma$ and $\Phi$ are constant.

<u>PROBLEM 2</u> : Derive the equations

(a) Of a streamline in the (x,y) plane which crosses the y axis at a distance $(5/4)r_0$ from the origin.

(b) Of a streamline in the (x,z) plane which crosses the z axis at a distance $(5/4)r_0$ from the origin. In either case the approximation $5^3 \sim 2^7$ may be used. For each line determine:
(1) Does the shape resemble one of the contours of Figure 4?
(2) Does the shape <u>match</u> one of those contours?

(c) What flow lines, if any, follow the surface of the sphere $r=r_0$? If such lines exist, what will be the flow velocity along them?

What flow velocity exists inside the closed magnetosphere? The present model offers no clue -- indeed, the internal flow is completely decoupled from the external one and a perfectly acceptable solution for $r<r_0$ would be

$$\underline{v} = 0 \qquad \underline{E} = 0 \qquad (25)$$

It is easy to visualize, however, that if any plasma fills the region $r<r_0$, and if momentum is transferred to it across the boundary, then just inside the boundary the plasma will tend to flow in the (-x) direction ("antisunward"). However, steady fluid flow must be continuous, so that if a steady-state situation is established, a return flow in the (+x) direction must exist somewhere in the interior: a possible pattern for such a flow, as viewed in the (x,y) plane, is shown in Figure 5a. This motion is often called magnetospheric convection, because it resembles, qualitatively, the convective flow of a heated fluid (Figure 5b).

Such a flow, driven by a "viscous like" momentum transfer across the boundary, was indeed suggested in the earliest theory of magnetospheric convection, proposed by Axford and Hines[6]. Their reasoning proceeded in the opposite direction from the one given earlier: they interpreted the motion of auroral arcs and related phenomena and concluded that magnetospheric disturbances were often associated with arrival of plasma from the night side, around the midnight meridian. This, they suggested, was the return flow from and antisunward plasma motion near the boundary, and they proceeded to unify both flows in a global theory of magnetospheric convection.

The concept of magnetospheric convection remains one of the fundamental ideas in all theories of the magnetosphere. However, few things in nature are simple: as noted below (and indeed, as already recognized by Axford and Hines) there also exists an alternative explanation of convection, based on the so-called open magnetosphere.

## The Dungeysphere

If the field in (7) is reversed to represent a "purely southward" IMF

$$\underline{B}_0 = -B_0\underline{z} \qquad (26)$$

a different axisymmetrical model of the magnetosphere is obtained. It is called here the "Dungeysphere", because it was first proposed by James Dungey in 1961[9] as an archtype of the "open" magnetospheric model, further described below. A cross section of the Dungeysphere is shown in Figure 6 and its properties are readily derived by an extension of the calculation performed earlier on the "dipole in sphere" model. The details are listed in Problem 3 and the derivation is left as an exercise to the reader, though final results will be cited.

PROBLEM 3 : For a "Dungeysphere" produced by the superposition of the dipole field of (1)-(2) and the constant southward field of (26)

(a) Derive the scalar potential $\gamma$.

(b) Derive the Euler potentials $(\alpha,\beta)$, given $\alpha=\alpha(r,\theta)$, $\beta=a\varphi$ .

(c) As Figure 6 suggests, the equatorial plane of the Dungeysphere contains a circular "neutral line" along which $\underline{B}=0$. Find the radius $r_0$ of this line and the value $\alpha_0$ which $\alpha$ assumes on it, and compare $r_0$ to the radius of the spherical magnetosphere produced with a constant northward field having the same intensity $B_0$.

(d) Using $\alpha_0$, find the colatitude $\theta_0$ on the surface of the Earth from which magnetic field lines lead to the neutral line. It is permissible to neglect $B_0$ in comparison with $B_e$. If $B_0$ = 5 nT and $B_e$ = 30,000, what is the value of $\theta_0$?

(e) Derive the electric potential $\Phi(\alpha,\beta)$, using the same method as in eq. (22).

(f) What is the electric field $\underline{E}$ in the Earth's ionosphere (assume $r=a$), in $(x,y,z)$ coordinates? With $B_0$ = 5 nT, $v_0$ =

300 km/s, what is the largest voltage drop between two points in the polar area bounded by $\alpha=\alpha_o$ ?

Answers:

(a) $$\gamma = a \cos\theta \, [B_o(r/a) - B_e(a/r)^2] \qquad (27)$$

(b) $$\alpha = -a \sin^2\theta \, [(B_o/2)(r/a)^2 + B_e(a/r)] \qquad (28)$$

(c) Eq.(27) has the form $\gamma = a \cos\theta \, f(r)$, and on the neutral line all derivatives of $\gamma$ must vanish. The factor $\cos\theta$ assures the vanishing of $\partial\gamma/\partial r$ anywhere in the equatorial plane, but the other derivative only vanishes if $f(r_o)=0$. This gives

$$r_o = a \, (B_e/B_o)^{1/3} \qquad (29a)$$

a distance smaller by a factor $2^{1/3}$ than the spherical radius in the preceding model. From (28)

$$\alpha_o = -(3/2) \, aB_e \, (B_o/B_e)^{1/3} \qquad (29b)$$

(d) Neglecting the external field, at $r = a$

$$\alpha_o = -aB_e \sin^2\theta_o \qquad (30)$$

Substitution of (29b) gives

$$\theta_o \approx 16.7^o \qquad (31)$$

(e) The derivation follows that of (22), except that the sign of $\alpha$ is reversed, so that $\alpha$ is replaced by $(-\alpha)$, a positive number. Also, because $\underline{B}_o$ is reversed, the sign of $\Phi$ in (18b) is reversed, giving

$$\Phi(\alpha,\beta) = -v_o \, (2aB_o)^{1/2} \, (-\alpha)^{1/2} \sin(\beta/a) \qquad (32)$$

(f) Neglecting $B_o$ in comparison with $B_e$, at r=a

$$-\alpha = aB_e \sin^2\theta$$

$$\Phi = -v_o (2B_oB_e)^{1/2} y \qquad (33)$$

The polar electric field is thus a constant field, directed from dawn to dusk. The largest voltage exists between extreme points on the dawn-dusk meridian, where $\theta=\theta_o$ and $\sin\varphi = \pm 1$. Its value in volts is found from (33) if MKS units are used, and amounts to

$$\Delta\Phi = 2v_oa (2B_oB_e)^{1/2} \sin\theta_o \simeq 6\ 10^5 \text{ volt} \qquad (34)$$

The most significant qualitative property of the Dungeysphere is that it is "open": while in the "dipole in sphere" only two types of field lines exist, purely terrestrial and purely inter planetary, the Dungeysphere admits a 3rd type, so-called open field lines,connected to Earth at one end and extending into space at the other. All open field lines connect to circular patches with $\theta<\theta_o$ (or $\theta>\pi-\theta_o$) around the magnetic poles, which will be termed the "polar caps." In these caps a constant electric field exists, directed from dawn to dusk and with a predicted voltage drop of about 6 $10^5$ volts.

Surprisingly, most features of this crude model agree with observations. Roughly circular patches of approximately constant dawn-to-dusk electric field have been observed near the magnetic poles by various spacecraft[10-14] and also by other methods (see sect. 8 of a review on the subject[15]). The boundaries of the patches roughly agree with the predictions of the model and they may be monitored by observing the locations of quiet auroral arcs ("auroral oval") which tend to parallel them a few degrees equatorward[16,17].

An electric field across the polar cap implies an electric current across the polar ionosphere, completed by field-aligned current sheets, flowing downwards into the caps' dawn boundaries and upwards from the dusk boundaries. Such sheets, carrying 1-2 million amperes, have indeed been observed[18,19,15]; they are flanked by weaker sheets of opposite polarity,

located further equatorward and apparently having a diffferent origin.

These currents may be visualized as arising from a "classical" dynamo, from a closed electrical circuit in which (whatever frame one uses) part of the current flows in a stationary medium and part in a moving medium which crosses magnetic field lines. Viewed in the frame of the Earth (see ref.15, Fig.18) this circuit would consist of the ionosphere (stationary), the solar wind (moving) and, linking the two, magnetic field lines anchored at the dawn and dusk edges of the polar caps.

The most obvious discrepancy between the model and observations is in the magnitude of $\Delta\Phi$, which falls short of the derived value by a factor of 10 or more. Perhaps the reason is that the actual magnetosphere, due to the pressure of the solar wind, is greatly elongated in the x direction, while the Dungeysphere is axisymmetric. Thus in the Dungeysphere the polar sheaf of open field lines has a circular cross section and $\Delta\Phi$ is proportional to its asymptotic width $\Delta y_\infty$ in the y direction; in the actual magnetosphere, this sheaf is elongated in the x direction to perhaps 10 times the model's value, and if its magnetic flux remains unchanged, its width in the y direction, and consequently $\Delta\Phi$, must shrink by a similar factor. The above may sound as a plausible explanation, but it is still remarkable that in spite of the great deformation of the outgoing sheaf, the size of the polar cap and the direction of $\underline{E}$ there differ so little from the prediction of the Dungeysphere. So far, however, no more detailed theory of open field lines exists.

PROBLEM 4 : If $\underline{E} = -\underline{v}\times\underline{B}$, what is the shape of the interface between the Dungeysphere and the solar wind?

Answer: By equations (23)-(24) streamlines of an ideal MHD flow are distinguished by the constancy of $\gamma$ and of $\Phi$, though here only the former is required. By (27) and (29a), $\gamma$ vanishes on the neutral line, and therefore the surface bounding all solar wind streamlines will be the surface $\gamma=0$, which is a sphere of radius $r_o$. Thus, figure 6 notwithstanding, the Dungeysphere, too, is a sphere!

PROBLEM 5 : Let an axisymmetric surface current be added along the

surface $r=r_o$ (see preceding problem) such that the added field produced by it is

for $r<r_o$ $\quad \underline{B}_1 = -B_1 \hat{\underline{z}} = \text{const.}$ (35)

for $r>r_o$ $\quad \underline{B}_1 = -\nabla\gamma_1 = \text{dipole field}$

$$\gamma_1 = (r_o B_1/2)(r_o/r)^2 \cos\theta \qquad (36)$$

(a) If the combined field $\underline{B}$ is represented by toroidal and poloidal "potentials" $\psi_1$ and $\psi_2$, through

$$\underline{B} = \nabla\chi\psi_1\underline{r} + \nabla\times\nabla\chi\psi_2\underline{r}$$

find $\psi_2$ ($\psi_1$ vanishes).
Hint:

$$\nabla\times\nabla\times\psi_2\underline{r} \equiv \nabla(\partial/\partial r)\psi_2 r - \underline{r}\,\nabla^2\psi_2$$

In source-free regions the second term vanishes, allowing $\psi_2$ to be related to the scalar potential $\gamma$.

(b) Derive $\alpha(r,\theta)$ for the combined field, for regions inside and outside $r=r_o$.

Hint: $\underline{B}$ may be expressed in two ways

$$\underline{B} = \nabla\times(\alpha\times\beta) = \nabla\times\ \alpha(a/r\sin\theta)\,\hat{\underline{\varphi}}$$

$$\underline{B} = \nabla\times(\nabla\times\psi_2\underline{r}) = \nabla\times(\nabla\psi_2\times\underline{r}) = -\nabla\times[(\partial\psi_2/\partial\theta)\,\hat{\underline{\varphi}}]$$

(c) (optional) Using a computer-controlled graphical device, draw field lines of this model in the (x,z) planes (electric potentials and other properties may also be derived). This simulates, at least near the noon meridian, the extra current needed for achieving pressure balance at the boundary, when the pressure due to the solar wind plasma is also taken into account.

Magnetic Merging and Convection

The curl of the MHD condition

$$\underline{E} = -\underline{v}\times\underline{B} \qquad (37)$$

gives

$$\partial\underline{B}/\partial t - \nabla\times(\underline{v}\times\underline{B}) = 0 \qquad (38)$$

This may be shown[20,21] (the proof is given in many plasma texts and is completely analogous to vorticity preservation in ideal fluid dynamics) to be equivalent to two conditions: (1) "flux preservation", the requirement that the magnetic flux threading a closed line of particles, each moving with the local bulk velocity, remains unchanged in time; and (2) "line preservation, that two such particles which initially share a magnetic field line, continue to do so at all times. The second condition (which is weaker than the first, and may be deduced from it) tends to be especially useful in visualizing MHD flow, and it readily leads to the notion of "moving field lines." Suppose a given field line is defined at $t=t_1$ by the particles strung out along it: then the field line defined by the same particles at any other time may be regarded as one and the same field line, having "moved with the plasma."

An application of this is provided by problem 2-c. Consider a field line distant enough from the dipole so that it may be considered to be parallel to the z axis, and let it cut the x-axis at $(x,y) = (x_o,0)$. Particles located on this line at $t=t_1$ and having a sufficiently large $|z|$ will pass through one of the branches of the z axis at some later time $t_2$, which means that for an arbitrarily small $\Delta t$, at $t_2-\Delta t$ they are sunward of the axis and at $t_2+\Delta t$ antisunward of it.

But what about particles with small $|z|$ which shared the same field line at $t=t_1$ and which are therefore destined to hit the sphere $r=r_o$ at $t=t_2$? At $t_2-\Delta t$ they are upstream of the sphere, at $t_2+\Delta t$ they are downstream of it, so that in an arbitrarily short time $2\Delta t$ they must have skirted the sphere with an arbitrarily large velocity (the side of the sphere around which the particle chooses to move is only defined if its initial y at $t=t_1$ is displaced from zero an infinitesimal amount to one side or the other). Though

this conclusion may appear surprising it is borne out by explicit calculation, since $\underline{E}$ contains $\partial\phi/\partial\alpha$ which by (22) is proportional to $\alpha^{-1/2}$, and $\alpha \to 0$ as $r \to r_o$.

As a more significant example, consider 5 solar wind particles, emitted with a radial velocity $v_o$ from the Sun's equatorial corona one day apart and numbered in the order in which they are emitted. At time t=0, just before the first particle emerges, they are all clumped together (Figure 7a) and thus certainly share the same magnetic field line. Five days later they are all moving radially in space, and presumably are still joined by the same magnetic field line, but that line is a spiral rather than a radial one, because the Sun rotates about $15^o$ between successive emissions (Figure 7b). This spiral shape (with large fluctuations) has been confirmed by observations and makes an angle of about $45^o$ with the radial at the Earth's distance, which is the reason for the earlier assertion that in the IMF $B_x \sim -B_y$.

Nevertheless, "line preservation" runs into trouble with the open magnetosphere (Figure 6). Consider two particles, numbered "1" and "2", sharing the same field line as it approaches Earth. A short time later "1" is on an open field line above the northern cap while "2" is on an open line in the opposite hemisphere, and the two no longer share the same field line. On the other hand, each now shares its line with a collection of ionospheric particles, though no such sharing existed before the particles encountered the magnetosphere, or is likely to exist after they have passed beyond its influence.

The breakdown occurs at the moment when the field line containing the particles passes the neutral point N1, and indeed theory shows that the concept of line preservation must be modified here, that it does not assure the continuation of "sharing a field line" beyond points where the line passes a point with $\underline{B}=0$. The process involved here is called "magnetic merging" or "reconnection" and in it the interplanetary field line AB flowing into N1 is cut into two parts. Simultaneously, a "closed" field line CD flowing into N1 (in a manner described further below) is also severed, and each half of the terrestrial line links up to half an interplanetary line to

form an "open" line. Later, at a neutral point N2, the process is reversed -- the two interplanetary segments are reconnected and continue their outward journey, while the terrestrial sections are also reunited and flow back earthwards.

This idea of "magnetic merging" has led to many theoretical studies[22], a few laboratory experiments and some attempts to observe it in space, but a more complete discussion is well beyond the scope of this introduction. Although Dungey[23][24] and others have regarded merging as a process in which magnetic energy is given up accelerate and heat particles (especially in solar flares), observational evidence suggests that if merging does occur at the front of the magnetosphere, it does not involve the release of very much energy. As for the nightside reconnection at N2, observations are scarce: the consensus is that if this takes place, its location is well beyond the orbit of the moon ($\sim$60a) and that it probably does not proceed in a smooth and steady fashion.

The flow of <u>closed</u> field lines into N1 and out of N2 suggests that convection is unavoidable in an open magnetosphere, unlike what is found for a closed configuration, where (25) is a valid solution. This indeed is the case, as can be seen by considering (24), which requires drifting particles to follow surfaces of constant potential $\Phi$. From among such particles let us give particular attention to an ionospheric ion which is held close to Earth by gravity and which keeps a roughly constant altitude h of (say) 200 km. By (33) the projection of a polar equipotential surface on the surface h=200 km is a line of constant y, extending between the two points at which it cuts the polar cap boundary $\theta=\theta_o$ (northern cap). Presumably, the ion follows this line (Figure 8). However, equipotential surfaces cannot end suddenly: a fringing pattern must exist at $\theta>\theta_o$, i.e. on closed magnetic field lines, in a way suggested by the broken lines in the figure.

This fringing electric field $\underline{E}$ will cause particles such as the one we have selected to continue their drift

$$\underline{v} = \underline{E}\times\underline{B}/B^2$$

beyond the boundary $\theta=\theta_o$, and because of (24), the lines which such particles follow will preserve their values of $\Phi$. Thus the ionospheric particle at position "1" in Figure 8 will tend to move along its equipotential surface to position "2", then (on an open magnetic field line) to "3", out of the polar cap to "4" and finally back to "1". However, because of line preservation, all particles which share a field line at "1" will move together to "2", a position corresponding (very nearly) to line CD in Figure 6. Then after merging, since line preservation still applies to all particles that pass on the same side of $\underline{B}=0$, half of them will stay together and will ultimately share a line with "3", while the other half will move above the opposing polar cap. Finally, at "4" both halves are united again to form a line similar to EF of Figure 6, after which they convect once more sunward.

All this is qualitative. In particular, the above argument does not predict whether the fringing pattern is pressed close to the polar cap boundary or extends far from it. In the first case, the sunward return flow in the equatorial plane is pressed close to the magnetopause and does not penetrate close to Earth, while in the second case the penetration is much more pronounced. A complicating factor not mentioned so far is the existence near Earth of an additional electric field $\underline{E}_c$, caused by the Earth's rotation and tending to impose co-rotation upon the plasma: the interested reader is referred to a more complete review[15] for details.

A useful mathematical model for the fringing patttern is obtained as follows. By (32), the polar electric field ($\theta<\theta_o$) has the form

$$\Phi(\alpha,\beta) = -\Phi_o\ (\alpha/\alpha_o)^{1/2}\ \sin(\beta/a) \qquad (39a)$$

(since $\alpha_o<0$, the negative sign may be omitted). A class of fringing fields which fit continuously with the above is then

$$\Phi(\alpha,\beta) = -\Phi_o\ (\alpha_o/\alpha)^{K}\ \sin(\beta/a) \qquad (39b)$$

PROBLEM 6 :

(a) Compare the magnitudes of the two terms in (28) at $r=r_o$, near the equatorial plane. Which is the larger one, and by

what ratio? How does this ratio change as one advances inwards from $r=r_o$?

(b) Show that if the smaller term in (28) is neglected and if (39b) is valid with K=1, a constant dawn-to-dusk electric field will exist on closed magnetic field lines in the equatorial plane.

While theory at this level does not predict the fringing field, it may be deduced from observations, either close to the ionosphere[25][26] or near the equatorial plane[27]. All such analyses seem to support (39b), at least as a rough approximation, but suggest that the value of K is not 1 but 2.

Asymmetric Models

Because the Dungeysphere is axisymmetric, $\underline{B}$ in it vanishes along an entire line. However, in more general situations, where such symmetry no longer exists, $\underline{B}$ usually vanishes only at two points[28] (or at a larger even number). For instance, if the field configuration is stretched on the night side (as observations suggest), only two neutral points remain, analogous to N1 and N2 in Figure 9: this development was anticipated in the discussion of the merging process, which thus remains unchanged. The detailed 3-dimensional geometry of magnetic field lines in the vicinity of an isolated neutral point is not always easily describable on a qualitative level[29].

A different example of an open magnetospheric model with 2 isolated neutral points, studied in problem 7, arises when the dipole field of equations (1)-(2) is superposed upon an arbitrary IMF

$$\underline{B}_o = B_{ox}\hat{\underline{x}} + B_{oy}\hat{\underline{y}} + B_{oz}\hat{\underline{z}} \qquad (40)$$

PROBLEM 7 : Derive the coordinates of the neutral points formed when the constant field $\underline{B}_o$ of (40) is superimposed upon the dipole field of equations (1)-(2).

Note: The problem may be studied in cartesian coordinates (x,y,z) and if $B_{oy} \neq 0$, appropriate intermediate variables are $G=x/y$, $U=z/y$ and $r^3$. At a certain stage a quadratic equation arises and one might be led to believe that each of its solutions represents one of the neutral points, but it isn't so.

(a) Show that one of the above solutions is non-physical, while the other gives both neutral points, when all choices in assigning algebraic signs are utilized.

(b) Solve for (x,y,z) given $B_{oy}=0$.

Unless (40) represents a purely northward field (as in eq. 7) the resulting model is always open. The "polar cap" stays roughly circular even when when $B_{oz}=0$, but its size shrinks steadily as the direction of $\underline{B}_o$ approaches that of the z axis, all of which agrees in a qualitative way with observations[17]. There even exists a slight sunward shift of the center of the polar cap in response to $B_{ox}$, which also is in qualitative accord with observations[17][30]. The structure of the electric field predicted by these models, on the other hand, is quite intricate, and its details probably do not fit observations too well.

The preceding results must all be evaluated numerically by computer[31], because $(\alpha,\beta)$, and hence $\Phi(\alpha,\beta)$, can no longer be derived analytically. Problem 8 below contains hints for deriving $\Phi$ for such models: the task is considerably lengthier than the solutions of other problems listed here, but is still well within the range of a graduate project. Program listings in FORTRAN (12 sec. on a VAX 11/780) or BASIC (5 hours on an HP 9830) are available upon request.

In the actual magnetosphere, it should be noted, boundary currents always exist and with such currents, both open and closed magnetosphere models may be constructed. If the models are open they may resemble those described above, or else they may have boundary currents such as those appearing in problem 5. If they are closed they always have boundary currents (unless $\underline{B}_o$ is strictly northwards) and resemble the configuration of Figure 4, with the external curves representing magnetic field lines and having an arbitrarily directed asymptotic direction.

<u>PROBLEM 8</u> : Given a magnetic field which is the superposition of (40) and a dipole, map the electric potential in the polar cap.

Procedure:

(a) Define a rectangular grid of 21×21 (or more) initial reference points, centered at the magnetic pole. A convenient approximation is to place the initial points not on the curved surface of the Earth but on the plane z= tangential to

it at the magnetic pole. A spacing between the points equivalent to 1-2 degrees of latitude usually assures that the entire polar cap is included and an array P(I,J) which will store (at the end of the calculation) the electric potentials of the points should be defined.

(b) Define a reference plane orthogonal to $\underline{B}_0$ of (40), at a distance $R_0 \approx 30a$ to 40a from the origin. On that plane find the point $(x_0, y_0, z_0)$ closest to the origin, and assign to it an arbitrary reference potential (e.g. zero). Use (40) to derive the electric potential at large distances and apply the result to express the potential of an arbitrary (x,y,z) on the reference plane. (Caution: there exist two reference planes, one threaded by field lines from the northern polar cap and one linked to the southern cap. Be sure the one selected is the one appropriate to the cap being studied!)

(c) Taking in turn each of the reference points of part (a), trace numerically the magnetic field line which rises from it, using a stepsize $\sim$0.5a (initial steps may be smaller, later ones larger). Allow a certain number of steps and check each time if the reference plane has been crossed. If a crossing has occured, derive the crossing point (linear interpolation is sufficiently accurate) and calculate its potential: by (17), this is also the potential P(I,J) of the point at which the tracing began. If the field line fails to reach the reference plane in the allotted number of steps or intersects Earth, diagnostic outputs such as 0 or -1 should be assigned to P(I,J).

(d) Print out the array P(I,J) in suitable units with 2-3 figure accuracy and interpolate manually to get the polar boundary and equipotential contours (or else, program the computer to perform the task). One interesting study is the variation in

the size of the polar cap as a function of the direction of $\underline{B}_0$, allowing the magnitude $B_0$ to stay constant[32].

## Polar Cusp and Tail Lobes

There exists another type of asymmetry which is of great practical interest in the actual magnetosphere. As noted in problem 4, if all SW particles have the same velocity and obey the MHD condition, then the boundary of the Dungeysphere is spherical. In actual fact, however, SW particles always have a finite range of velocities and of directions of motion, and this spread is greatly increased by their passage through the bow shock of the Earth. Thus the spherical boundary (redrawn in Figure 9) will not impose an absolute barrier to their motion: instead, as soon as merging has occured, some SW particles will begin spilling over it onto the terrestrial part of newly merged "open" lines.

Because particles flowing into a stronger magnetic field are subject to magnetic mirroring, most such particles will not penetrate very far and will quickly move out again, all the time staying on the same moving field line as other solar particles which had shared their line earlier but had not moved earthwards. A few select particles among those that penetrate, with velocities almost parallel to $\underline{B}$, may however reach as far down as the ionosphere.

By the above argument one might expect a region of solar wind plasma reaching all the way to the ionosphere and shaped, in profile, like the curved funnel cloud of a tornado. Such a region is in fact observed[33]-[35] and it is known as the polar cusp.

If the external field is purely southward, as in (26), both polar cusps are completely equivalent. More frequently, however, the IMF exhibits the spiral structure discussed earlier (in connection with the motion of magnetic field lines), so that while the SW velocity $\underline{v}$ far from Earth is radial, its components $v_{\parallel}$ and $v_{\perp}$, parallel and orthogonal to $\underline{B}$, are approximately equal.

Now to maintain a SW motion orthogonal to $\underline{B}$ (i.e., to maintain $v_{\perp}$), the

electric field of (37) is needed, and it is this field, too, that deflects the flow around the magnetosphere. On the other hand, because of (17), $v_{\parallel}$ is not affected (to lowest order) by the electric force. This suggests a certain asymmetry between the polar caps, because depending on the magnetic polarity of interplanetary field lines ("away" from the Sun or "toward" the Sun) open field lines from one of the caps will extend in the direction of the Sun while those from the other cap will point away from it. If $v_{\parallel}$ moves SW particles along their guiding field lines like beads along a wire, one would expect plasma to be shoved deeper into the "sun-facing" cusp and thus create an asymmetry between the two polar regions.

Many observed asymmetries correlate with $B_{oy}$ of (40), which is generally taken as an indicator of the magnetic polarity of the IMF[12][36]-[38]. In particular, when energetic particles are created by solar flares near active sunspot groups, they often have higher intensity (at first) at the sunfacing polar cap than in opposite polar region[39][40]. Not much is known as yet, however, about unequal penetration of plasma related to interplanetary field polarity, though some striking correlations between the intensity of cusp electrons and $B_{oy}$ have been reported[41].

Beyond the cusp, in the regions of open field lines extending to the downstream end of the magnetosphere (arc Q-N2 in Figure 9) the situation is quite different. These regions are called the "high latitude lobes" (or "tail lobes") and in the actual magnetosphere they are quite large, since the difference in x between Q and N2 is stretched to a length about 10 times larger (or more) than in the Dungeysphere model. In this region the solar wind is moving alongside the magnetosphere or (mostly) away from it, and only very few of its particles manage to buck the general trend and flow earthwards. On the other hand, terrestrial particles can easily escape along open field lines in these regions.

One would therefore expect the plasma density n in the lobe region to be remarkably low, and this is indeed observed. In the solar wind $n \sim 10$ cm$^{-3}$, in the cusp $n \sim 2$-$3$ cm$^{-3}$, in the magnetosphere 1 cm$^{-3}$ is typical (though close to Earth n becomes much larger) and in the "plasma sheet" in the middle of the tail, near z=0, $n \sim 0.3$ cm$^{-3}$. In the lobes, however, $n \sim 0.01$ cm$^{-3}$, making this

by far the most rarefied plasma in the Earth's neighborhood.

Assessment

Which model comes closest to reality? Is the magnetosphere open or closed? The preponderance of the evidence so far points towards an open magnetosphere: the polar electric field, the convective flow, the relation of the size of the polar cap to $B_{oz}$ (and one may add, the strong correlation between $B_{oz}$ and magnetospheric disturbances[42]), all these suggest that the magnetosphere is open. So do the existence of polar cusps and tail lobes, and phenomena which correlate with $B_{oy}$.

The situation is not always clear-cut. If the magnetosphere is closed and convection is driven by a viscous-like momentum transfer, the polar pattern of electric equipotentials will still resemble Figure 8, at least qualitatively. However, it will not be easy to explain why the polar caps have rather abrupt boundaries, or why their size correlates with $B_{oz}$.

Again, the existence of cusps is not conclusive evidence, because it was pointed out[43] that in a closed configuration (like that of Figure 3) the neutral points would tend to cave in to the pressure of the external plasma and this would also produce cusp-like features.

Even if an open magnetosphere is accepted problems remain. In a dipole field, and also in the Dungeysphere, the lowest magnetic intensity B on any field line is always in the equatorial plane. This property is important in the theory of trapped radiation, where the minimum of B on a field line acts as a natural midpoint, across which trapped particles bounce back and forth. For the dipole-in-sphere, however, this holds only up to a certain distance. Closed field lines which cross z=0 not too far from $r=r_o$ will have their smallest values of B near their points of closest approach to the neutral points, and at z=0 they will actually have local maxima of B.

PROBLEM 9 : Given that a field line crossing the equatorial plane of the "dipole in sphere" in the range $\lambda r_o < r < r_o$ has there a local maximum of B, what is $\lambda$ ?

Hint: Derive $B^2$. In the equatorial plane, $\partial B^2/\partial\theta=0$, showing that $B^2$ has an extremum there. At $r=\lambda r_o$ the extremum switches from minimum to maximum: what can then be said about the second derivative?

This property of a minimum turning into a local maximum is common to many analytical models proposed as approximations to the actual magnetosphere, from the Chapman-Ferraro model(44)(45) to more elaborate image dipole representations(46) and models utilizing external harmonics(47)(48). Theoretically, it has been noted(49) that the longitudinal ("second") adiabatic invariant may vary discontinuously where this happens. What seems surprising is that studies of average field intensities(50) and of pitch angle distributions of trapped particles in the Earth's magnetosphere(51) suggest that the actual magnetosphere also has this property, in contrast with the Dungeysphere which does not.

A different problem involves the electric field pattern of Figure 8. While observations have tended to confirm it, there exist indications of a different structure during prolonged spells of northward $B_{oz}$, with not 2 but 4 "convection cells" in the polar caps(52)(53). The meaning of this is not at all clear and it is hoped that the twin "Dynamics Explorer" mission, slated for launch in 1981(54), will gather enough data on this puzzling effect for appropriate magnetospheric models to be constructed.

Do there exist any alternative models to those described here? The closed model has 2 types of field lines, the Dungeysphere 3, and a model with 4 types was obtained by Podgorny et al.(55) in laboratory experiments which simulated plasma flow around the magnetosphere. These workers found that each "interplanetary" field line and each "terrestrial" one, upon merging, split not into 2 parts as in the Dungeysphere but into 3: the northern and southern sections then joined up as in a simple open model, while the two middle sections formed an independent eddy or "visor" (Figure 10), or possibly a chain of such eddies(56). A variant of this model may well come closer to existing conditions than any of the simpler models, but observations have not yet produced conclusive evidence on this point.

## Conclusion

We have attempted to present an elementary introduction to magnetospheric dynamics, including open and closed configurations, flow patterns, electric fields, field line motion, convection, merging, cusp regions and tail lobes, using some simple analytical models. The results may be compared to Figure 2 which represents a schematic view of the actual magnetosphere. Apart from the large day-night distortion the simple models have provided a fair qualitative fit to observations, though it should be realized that the physics of the plasma sheet, the substorm and aurora, the radiation belt and its "ring current" are all beyond such crude approximations and require additional study.

## Acknowledgment

I thank John McKinlay for his careful reading of this work and his constructive comments.

## Note

This document contains an appendix with solutions to problems 1, 2, 5, 6, 7 and 9. It is not planned to include such solutions in the final published version.

## REFERENCES


(1) D.P. Stern, Euler potentials, Amer. J. Phys., 38, 494-501, 1970.

(2) T. Gold, Motions in the magnetosphere of the earth, J. Geophys. Res., 64, 1219-1224, 1959.

(3) K. Schindler, On the role of irregularities in plasma entry into the magnetosphere, J. Geophys. Res., 84, 7257-7266, 1979.

(4) T. Obayashi, Entry of high energy particles into the polar ionosphere, Rep. Ionosph. Space Res. Japan, 13, 201-219, 1959.

(5) F.S. Johnson, The gross character of the geomagnetic field in the solar wind, J. Geophys. Res., 65, 3049-3051, 1960.

(6) F. S. Johnson, The driving force for magnetospheric convection, Rev. Geophys. Space Phys., 16, 161-167, 1978.

(7) C.L.Longmire, Elementary Plasma Physics, 296 pp., Interscience, New York, 1963.

(8) W.I. Axford and C.O. Hines, A unifying theory of high-latitude geophysical phenomena and geomagnetic storms, Can. J. Phys., 39, 1433-1464, 1961; reprinted with comments in C.O.Hines et al., The Upper Atmosphere in Motion, Amer. Geophys. Union, Washington, D.C., 1974.

(9) J.W. Dungey, Interplanetary magnetic field and the auroral zones, Phys. Rev. Lett., 6, 47-48, 1961.

(10) D.P. Cauffman and D.A. Gurnett, Double-probe measurement of convection electric fields with the Injun 5 satellite, J. Geophys. Res., 76, 6014-6027, 1971.

(11) D.P. Cauffman and D.A. Gurnett, Satellite measurements of high latitude convection electric fields, Space. Sci. Rev., 13, 369-410, 1972.

(12) J.P. Heppner, Electric field variations during substorms: Ogo-6 measurements, Planet. Space. Sci., 20, 1475-1498, 1972.

(13) J.P. Heppner, Empirical models of high-latitude electric fields, J. Geophys. Res., 82, 1115-1125, 1977.

(14) D.H. Fairfield, Electric and magnetic fields in the high latitude magnetosphere, Rev. Geophys. Space Phys., 15, 285-298, 1977.

(15) D.P. Stern, Large-scale electric fields in the earth's magnetosphere, Rev. Geophys. Space Phys., 15, 156-194, 1977.

(16) C.-I. Meng, R.H. Holzworth and S.-I. Akasofu, Auroral circle--delineating the poleward boundary of the quiet auroral belt, J. Geophys. Res., 82, 164-172, 1977.

(17) C.-I. Meng, Polar cap variations and the interplanetary magnetic field, p.23-46 in Dynamics of the Magnetosphere, S.-I. Akasofu, ed., D.Reidel, Dordrecht, Holland, 1980.

(18) A.J. Zmuda and J.C. Armstrong, The diurnal flow pattern of field-aligned currents, J. Geophys. Res., 79, 4611-4619, 1974.

(19) T. Iijima and T.A. Potemra, The amplitude distribution of field-aligned currents at northern high latitudes observed

by Triad, J. Geophys. Res., 81, 2165-2174, 1976.

(20) W.A. Newcomb, Motion of magnetic lines of force, Ann. Phys., N.Y., 3, 347-385, 1958.

(21) D.P. Stern, The motion of magnetic field lines, Space Sci. Rev., 6, 147-173, 1966.

(22) V.M. Vasyliunas, Theoretical models of magnetic field line merging, Rev. Geophys. Space Phys., 13, 303-336, 1975.

(23) J.W. Dungey, Conditions for the occurence of electrical discharges in astrophysical systems, Phil. Mag., Ser. 7, 44, 725-738, 1953.

(24) J.W. Dungey, Cosmic Electrodynamics, Cambridge University Press, New York, 1958.

(25) D.P. Stern, Models of the earth's electric field, NASA/GSFC X Doc. 602-74-159, May 1974.

(26) S.M. Kaye, Determination of the magnitude of the convection electric field shielding from low-altitude electric field measurements, paper 17, Chapman Conference on High Latitude Electric Fields, Yosemite, 1980 (Conference notes, Utah State University).

(27) H. Volland, A semiempirical model of large-scale magnetospheric electric fields, J. Geophys. Res., 78, 171-180, 1973.

(28) P.A. Sweet, The production of high energy particles in solar flares, Supplemento del Nuovo Cimento, Vol. VIII, Ser. X, 188-196, 1958.

(29) S. Fukao, M. Ugai and T. Tsuda, Topological study of mag-

netic field near a neutral point, Rep. Ionosph. Space Res. Japan, 29, 132-139, 1975.

(30) S. Cowley, Private communication.

(31) D.P. Stern, A study of the electric field in an open magnetospheric model, J. Geophys. Res., 78, 7292-7305, 1973. The x-axes in Figure 7 of this work should be reversed.

(32) S.-I. Akasofu and B.H.Ahn, Dependence of the amount of open magnetic flux on the direction of the interplanetary magnetic field, Planet. Space. Sci., 28, 545-547, 1980.

(33) L.A.Frank, Plasma in the earth's polar magnetosphere, J. Geophys. Res., 76, 5202-5219, 1971.

(34) W.J. Heikkila and J.D. Winningham, Penetration of magnetosheath plasma to low altitudes through the dayside magnetospheric cusps, J. Geophys. Res., 76, 883-891, 1971.

(35) G.G.Shepherd, Dayside cleft aurora and its ionospheric effects, Rev. Geophys. Space Phys., 17, 2017-2033, 1979.

(36) J.P. Heppner, Polar cap electric field distributions related to the interplanetary magnetic field direction, J. Geophys. Res., 77, 4877-4887, 1972.

(37) L. Svalgaard, Polar cap magnetic variations and their relationship with the interplanetary magnetic sector structure, J. Geophys. Res., 78, 2064-2078, 1973.

(38) J.L.Burch and R.A. Heelis, IMF changes and polar cap electric fields and currents, p.47-62, in Dynamics of the Magnetosphere, S.-I. Akasofu, ed., D.Reidel, Dordrecht, Holland, 1980.

(39) G.A. Paulikas, Tracing of high-latitude magnetic field lines by solar particles, Rev. Geophys. Space Phys., 12, 117-128, 1974.

(40) J.A. Van Allen, J.F. Fennell and N.F. Ness, Asymmetric access of energetic solar protons to the Earth's north and south polar caps, J. Geophys. Res., 76, 4262-4275, 1971.

(41) D.M. Yaeger and L.A. Frank, Low energy electron intensities at large distances over the earth's polar cap, J. Geophys. Res., 81, 3966-3976, 1976.

(42) P. Perreault and S.-I. Akasofu, A study of geomagnetic storms, Geophys. J. Roy. Astr. Soc., 54, 547-573, 1978.

(43) H. Grad and P.N. Hu, Neutral point in the geomagnetic field, Phys. Fluids, 9, 1610-1611, 1966.

(44) S. Chapman and V.C.A. Ferraro, A new theory of magnetic storms, Terr. Magn. Atmos. Elec. (later J. Geophys. Res.), 36, 77-97 and 171-186, 1931. See also Fig.1, Ref. 34.

(45) S. Chapman and J. Bartels, Geomagnetism, Oxford University Press, New York, 1940.

(46) E.W. Hones, Jr., Motions of charged particles trapped in the earth's magnetosphere, J. Geophys. Res., 68, 1209-1219, 1963.

(47) G.D. Mead, Deformation of the geomagnetic field by the solar wind, J. Geophys. Res., 69, 1181-1195, 1964.

(48) G.D. Mead and D.H. Fairfield, A quantitative magnetospheric model derived from spacecraft magnetometer data, J. Geophys. Res., 80, 523-534, 1975.

(49) T.G. Northrop and E. Teller, Stability of the adiabatic motion of charged particles in the earth's field, Phys. Rev., 117, 210-225, 1960.

(50) M. Sugiura, B.G. Ledley, T.L. Skillman and J.P. Heppner, Magnetospheric-field distortions observed by Ogo 3 and 5, J. Geophys. Res., 76, 7552-7565, 1971.

(51) H.I. West, Jr., The signatures of various regions of the outer magnetosphere in the pitch angle distributions of energetic particles, p. 150-179 in Quantitative Modeling of Magnetospheric Processes, W.P. Olson, ed., Amer. Geophys. Union, Washington, D.C., 1979.

(52) W.J. Burke, M.C. Kelley, R.C. Sagalyn, M. Smiddy and S.T. Lai, Polar cap electric field structure with northward interplanetary magnetic field, Geophys. Res. Let., 6, 21-24, 1979.

(53) J.L. Horwitz and S.-I. Akasofu, On the relationship of the polar cap current system to the north-south component of the interplanetary magnetic field, J. Geophys. Res., 84, 2567-2572, 1979.

(54) R.A. Hoffman, Dynamics Explorer Program, EOS, 69, 689-692, Oct. 28, 1980.

(55) I.M. Podgorny, E.M. Dubinin and Yu.N. Potanin, The magnetic field on the magnetospheric boundary from laboratory simulation data, Geophys. Res. Let., 5, 207-210, 1978.

(56) I.M. Podgorny, E.M. Dubinin and Yu.N. Potanin, On magnetic curl in front of the magnetosphere boundary, Geophys. Res. Let., 7, 247-250, 1980.

CAPTIONS TO FIGURES

Figure 1 -- The geomagnetic dipole.

Figure 2 -- Schematic view of the actual magnetosphere (Mizera and Fennell, Rev.Geophys.Space.Phys., 16, 147, 1978)

Figure 3 -- The "dipole in sphere" produced by superposition of a constant northward field and a dipole.

Figure 4 -- (no caption)

Figure 5a -- Convective flow in the equatorial plane of a model magnetosphere, schematically shown.

Figure 5b -- Convective flow in a heated fluid.

Figure 6 -- The "Dungeysphere" formed by superposition of a constant southward field and a dipole. The particles marked "1" and "2" illustrate the violation of line preservation caused by magnetic merging.

Figure 7a -- Five particles initially located in one region of the solar corona, illustrating how the property of line preservation can provide the shape of interplanetary field lines.

Figure 7b -- The 5 particles of Figure 7a and their shared magnetic field line, 5 days after the first among them was emitted from the Sun.

Figure 8 -- Electric equipotential lines in a map of the northern polar ionosphere, in an idealized schematic view. The numbers give successive positions of a particle (and therefore also of the footprint of a magnetic field line) participating in a convective flow.

Figure 9 -- Illustration of the polar cusp and of the high latitude lobes, using the Dungeysphere.

Figure 10 -- Podgorny's magnetospheric model, with 4 kinds of field lines.

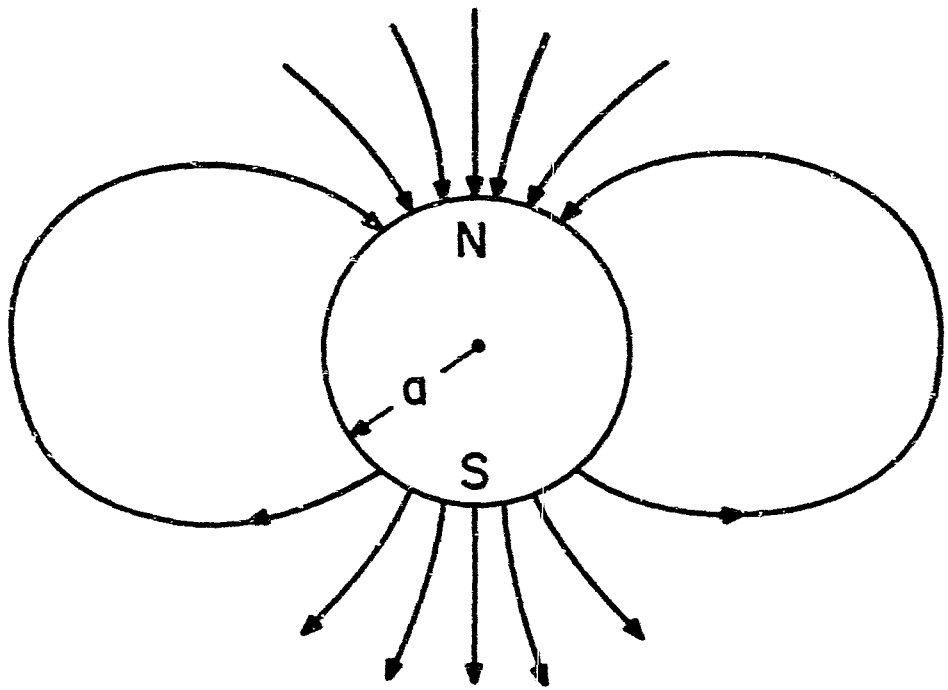


Figure 1

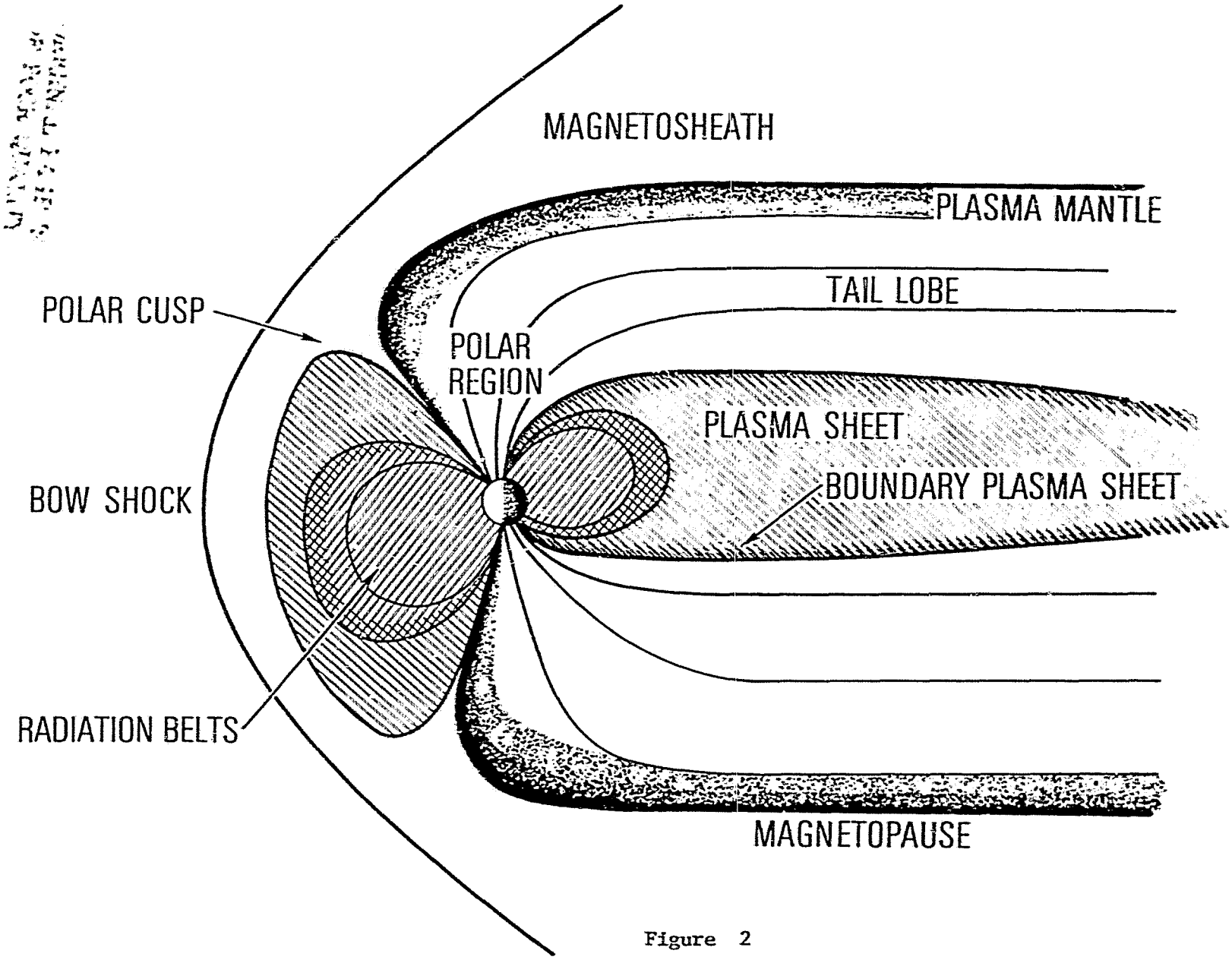
MAGNETOSHEATH
PLASMA MANTLE
TAIL LOBE
POLAR CUSP
POLAR
REGION
PLASMA SHEET
BOUNDARY PLASMA SHEET
BOW SHOCK
RADIATION BELTS
MAGNETOPAUSE

Figure 2

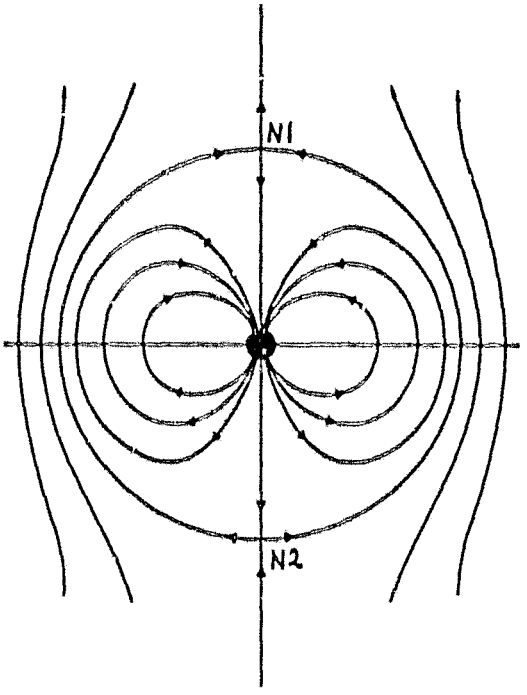


Figure 3

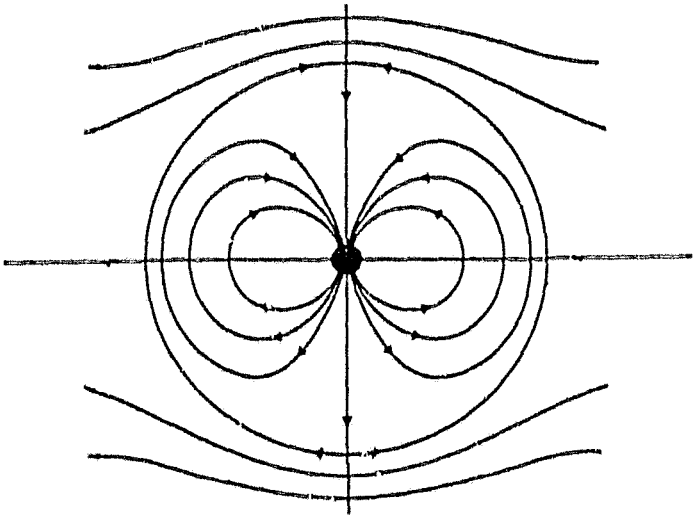

Figure 4

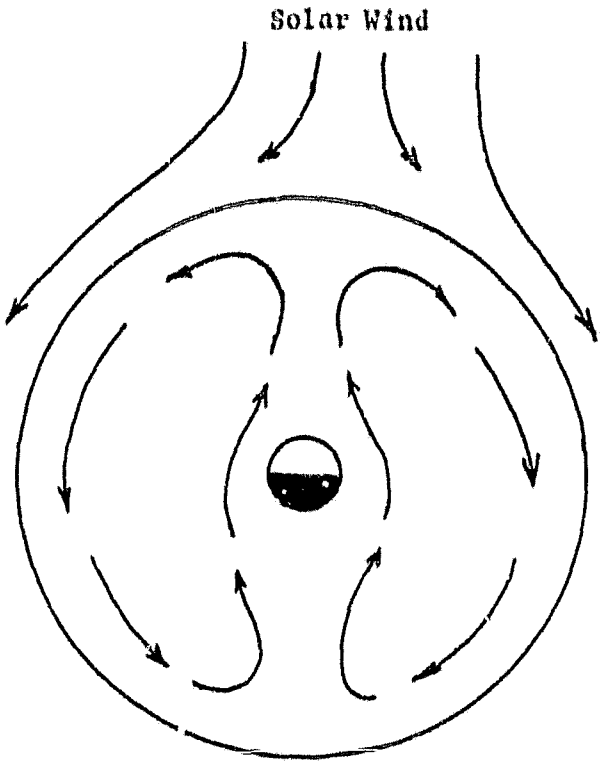


Figure 5a

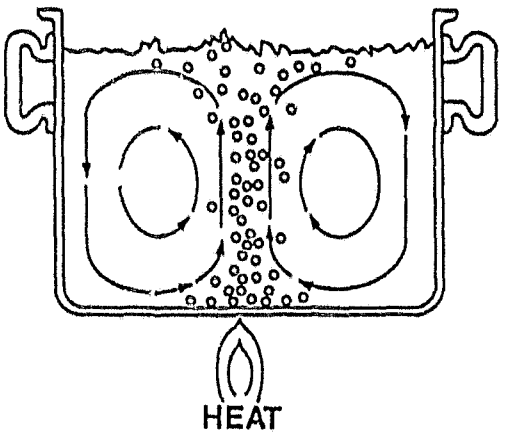


Figure 5b

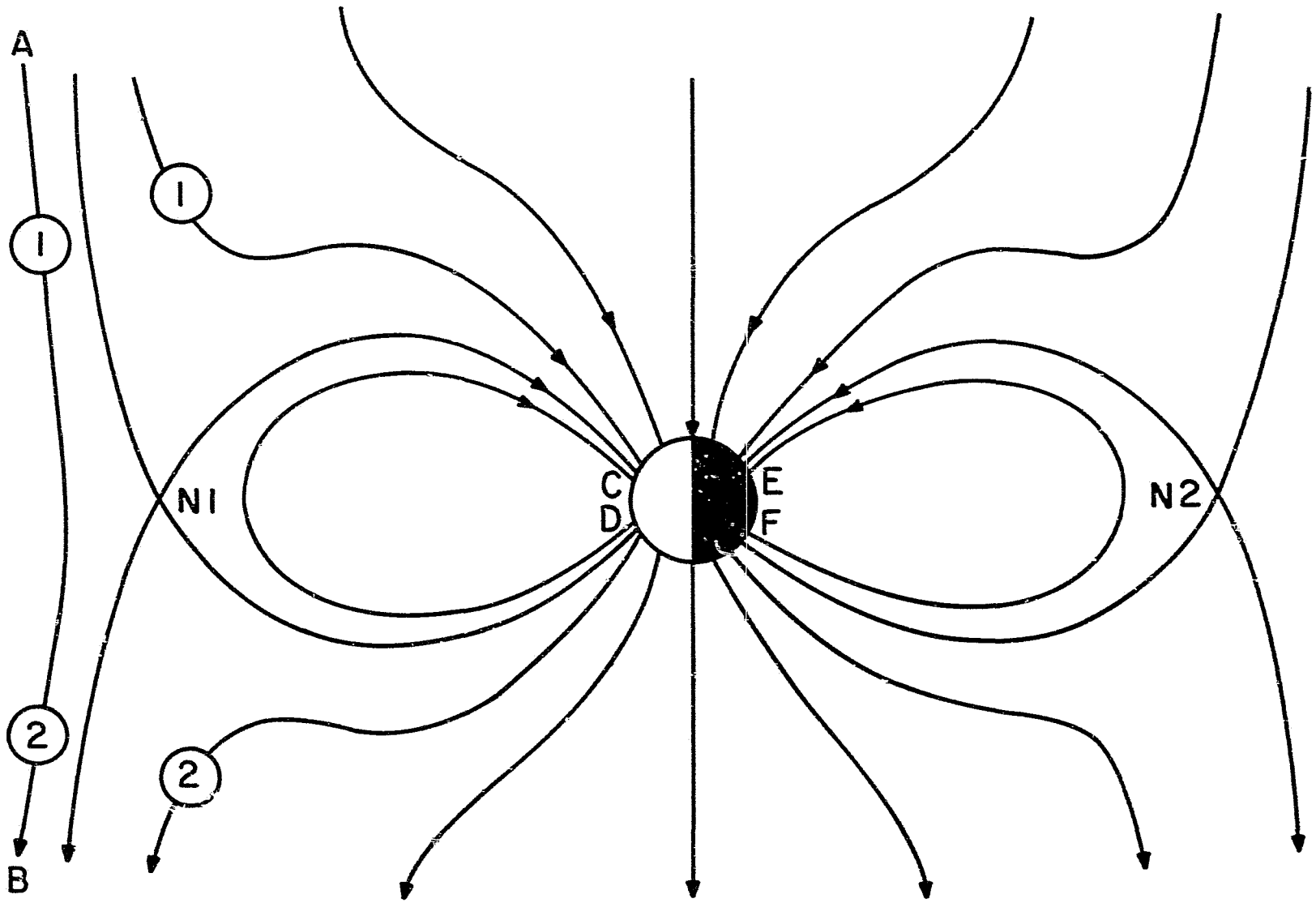


Figure 6

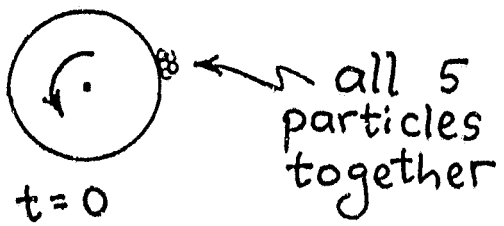


Figure 7a

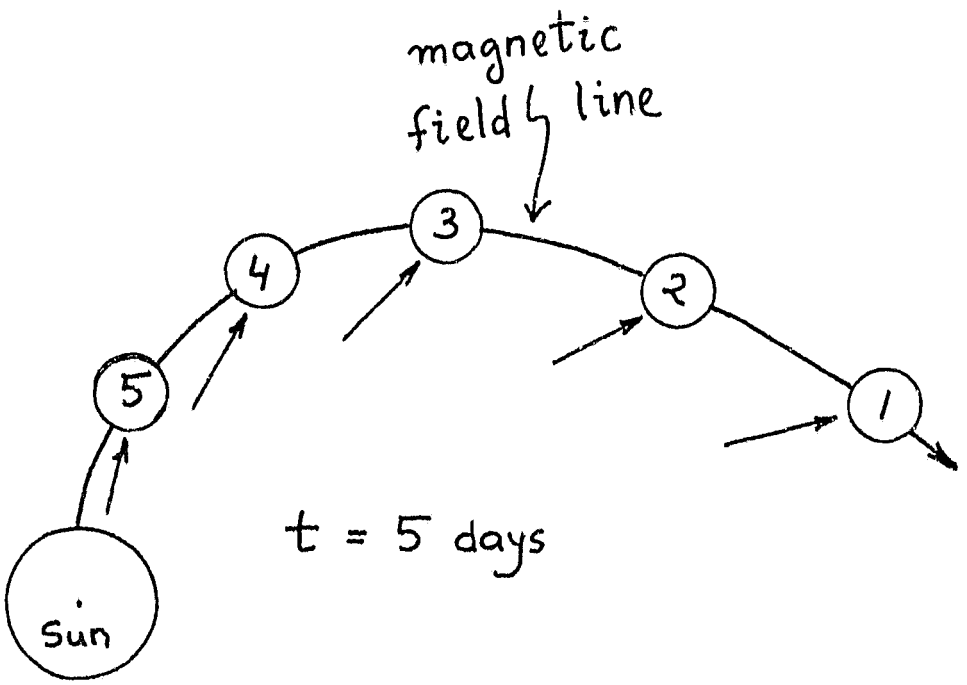


Figure 7b

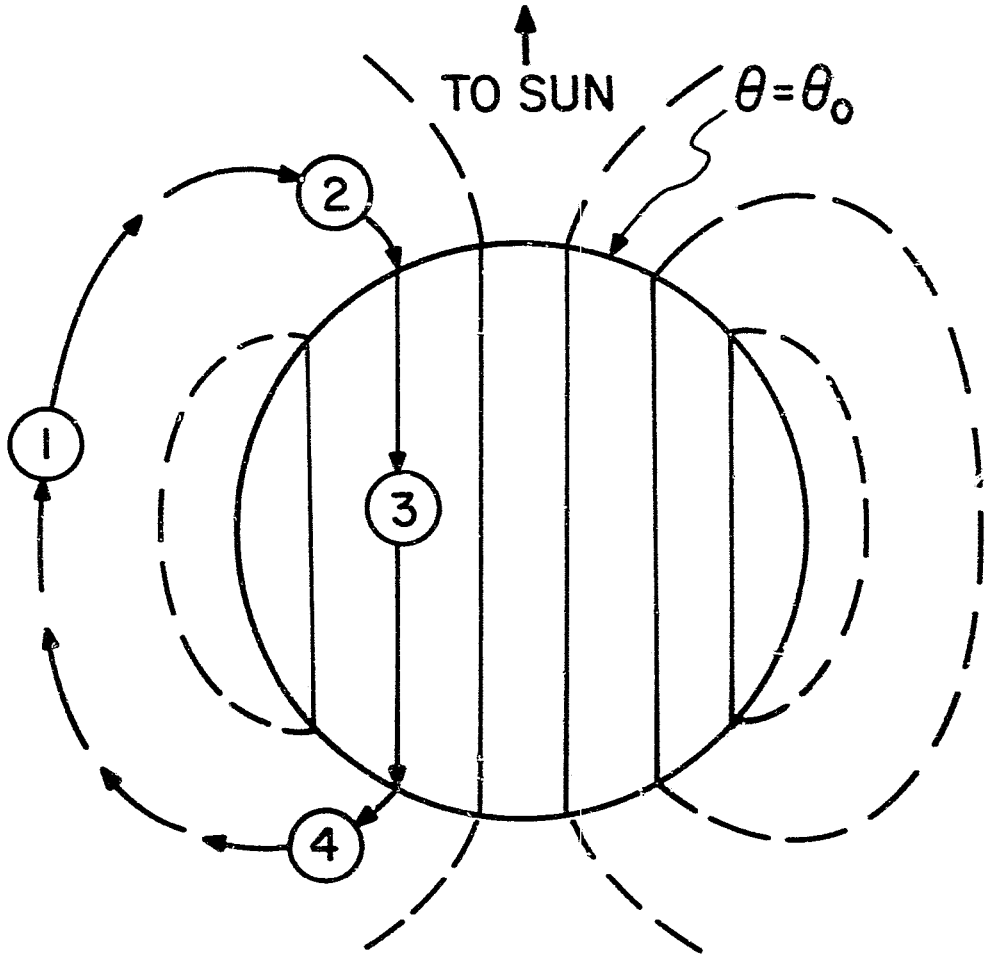


Figure 8

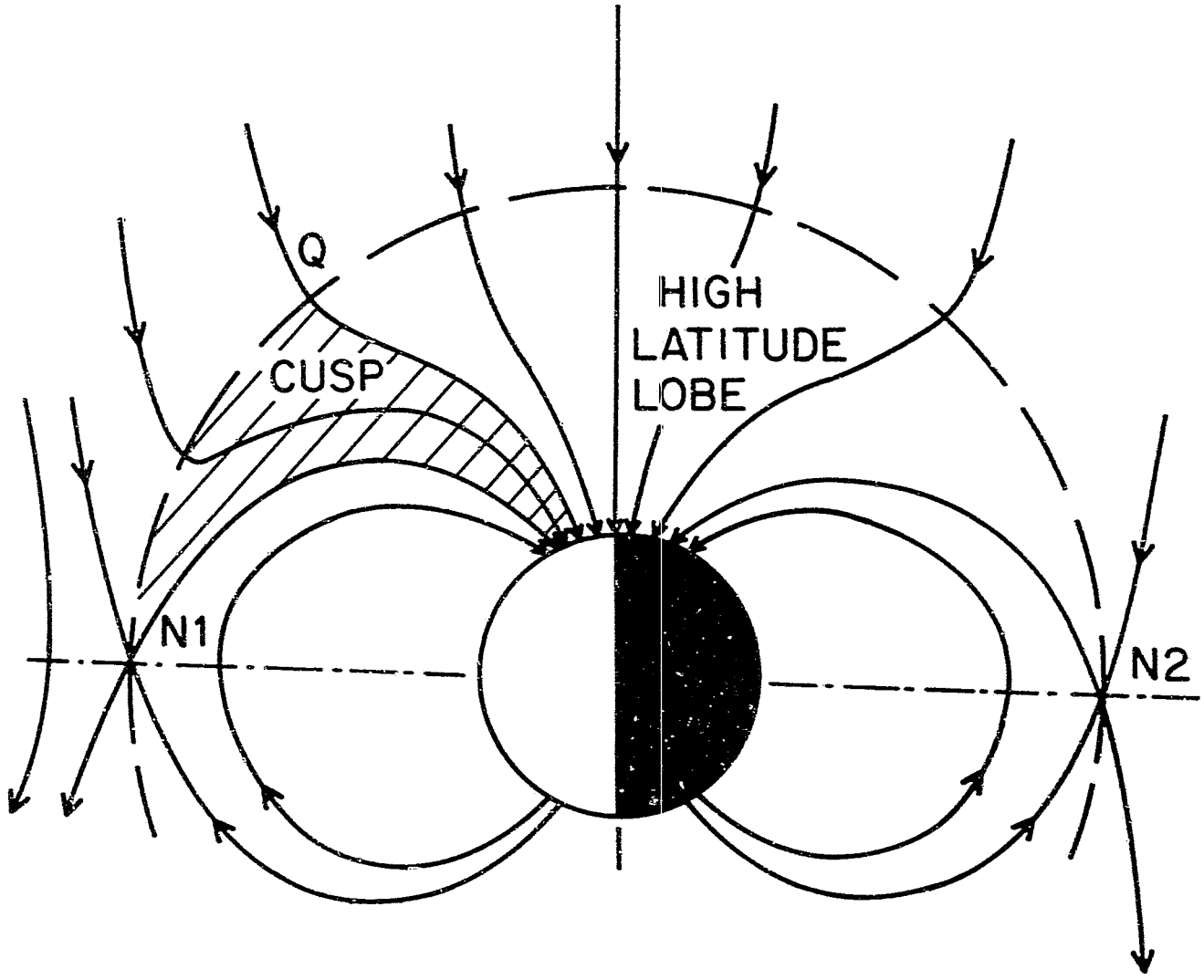


Figure 9

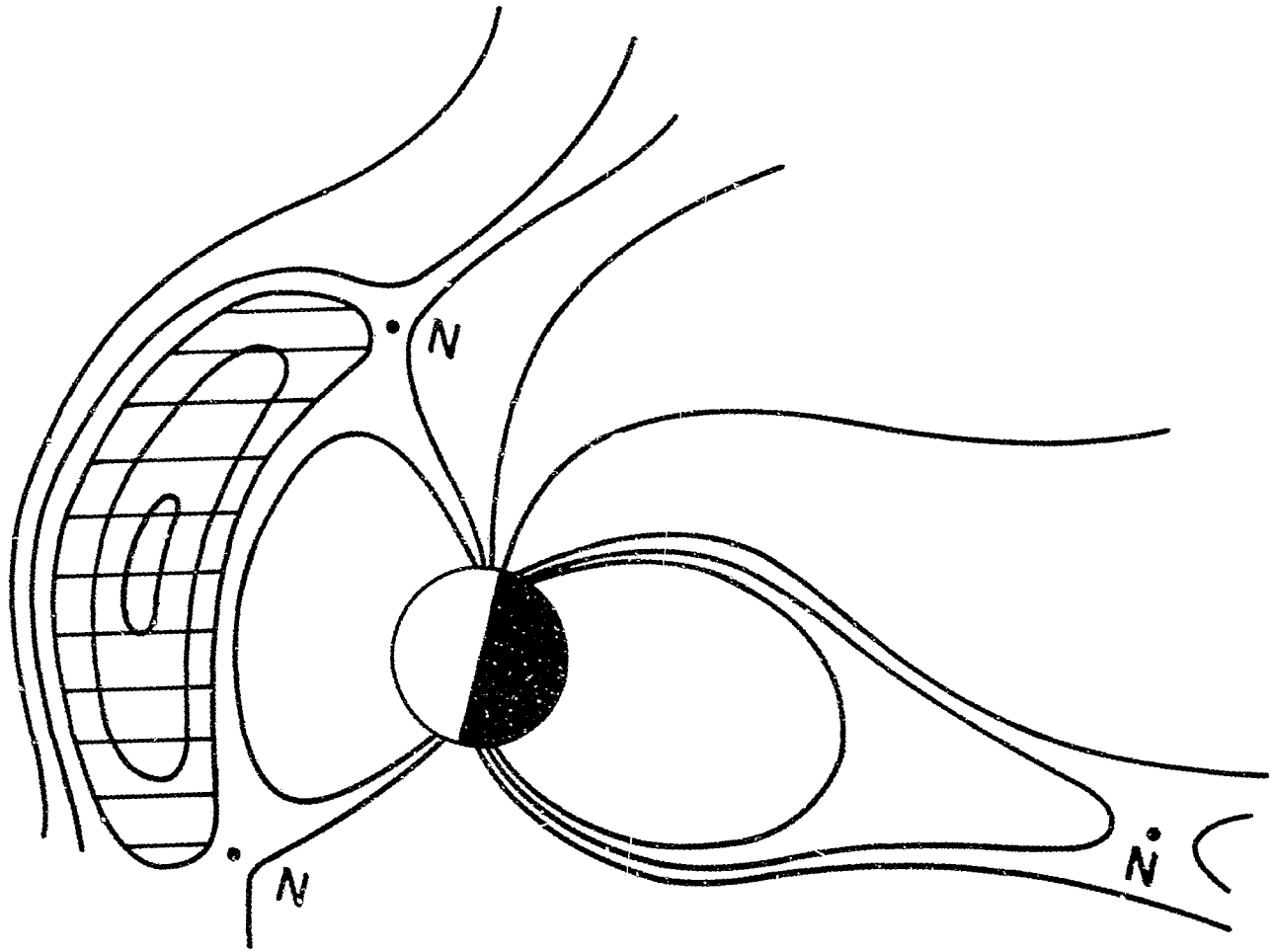


Figure 10

# APPENDIX: Solutions to Selected Problems

**Problem 1:**

(a)
$$\alpha = a \sin^2\theta \, [(B_o/2)(r/a)^2 - B_e(a/r)] = 0$$

gives $(r_o/a)^3 = 2B_e/B_o$ or $(r_o/a) = (2B_e/B_o)^{1/3}$

By (2),(8)
$$\gamma = - a \cos\theta \, [B_o(r/a) + B_e(a/r)^2]$$

$B_r$ vanishes if
$$\partial\gamma/\partial r = - \cos\theta \, [B_o - 2B_e(a/r)^3] = 0$$

This again gives the condition for $r_c$.

(b) As shown above, $B_r$ vanishes on the sphere $\alpha=0$. The other component $B_\theta$ is proportional to

$$\partial\gamma/\partial\theta = a \sin\theta \, [B_o(r/a) + B_e(a/r)^2]$$

For $r>0$ the brackets are always positive, so this term vanishes only if $\sin\theta=0$.

**Problem 2:**

(a) A streamline confined to the (x,y) plane has automatically $\gamma=0$ and therefore (24) has to be used:
$$\Phi = 0$$
and by (22)
$$\alpha \sin^2\varphi = 0$$

At the crossing point $(x,y) = (0, 1.25r_o)$, $\sin^2\varphi = 1$, and since that point is also in the equatorial plane where $\sin^2\theta=1$, by (13a)

$$\alpha = a[(B_o/2)(a/r)[ (r/a)^3 - (2B_e/B_o) ] = \alpha_o$$

Substituting $r = (5/4)r_o$ and using the approximation $(5/4)^3 \sim 2$ shows that the first term in the brackets is about twice the size of the second one. Thus

$$\alpha_o \sim aB_e \, (a/r) = aB_e \, (4/5)^{1/3} \, (a/r_o)$$

Since the flow line is completely confined to the equatorial plane $\sin\theta=1$, its equation may be written
$$[(B_o/2)(r/a)^2 - B_e(a/r)] \sin^2\varphi = \alpha_o$$

which indeed has the same form as (13a), turned around by $90^o$ so that $\sin^2\varphi$ replaces $\sin^2\theta$.

(b) A streamline confined to the (x,z) plane has automatically $\Phi=0$ and therefore (23) should be used:

$$\gamma = -a \cos\theta \, [B_o(r/a) + B_e(a/r)^2] = \gamma_o = \text{constant}.$$

At $(x,z) = (0, 1.25r_o)$, $\cos\theta=0$ and

$$\gamma_o = - a\, B_o\, (a/r)^2\, [(r/a)^3 + (B_e/B_o)] \;\sim\; -5aB_e\, (a/r)^2$$

$$\gamma_o \sim - (16a/5)\, (B_o^2 B_e/4)^{1/3}$$

The flow line's equation is thus approximately

$$\cos\theta\, [B_o(r/a) + B_e(a/r)^2] = (16/5)\, (B_o^2 B_e/4)^{1/3}$$

It does <u>not</u> match the field line equation (13a) in any way. In fact, at large distances it reduces to

$$z/a \;=\; (8/5)(r_o/a) > (5/4)(r_o/a)$$

Hence the flow line <u>decreases</u> its distance from the x axis as it approaches the origin, in contrast with the external field lines of Figure 4.

<u>Problem 5:</u>

(a) Let $\underline{B} = -\nabla\gamma$ , $\gamma = a\cos\theta\, [g_1^o(a/r)^2 + \bar{g}_1^o(r/a)]$

(all this is easily generalized for an arbitrary harmonic function). Then by

$$\gamma = - (\partial/\partial r)(\psi_2 r)$$

$\psi_2$ will have a corresponding expansion, involving the same harmonic functions. Equating coefficients

$$\psi_2 = a\cos\theta\, [g_1^o(a/r)^2 - (1/2)\bar{g}_1^o(r/a)]$$

Noting that the external field is <u>southward</u>, one obtains:

For $r<r_o$ $\quad g_1^o = -B_e \quad\quad \bar{g}_1^o = B_o - B_1$

For $r>r_o$ $\quad g_1^o = -B_e + (r_o/a)^3(B_1/2) \quad\quad \bar{g}_1^o = B_o$

(b)

$$\alpha = - \sin\theta\, (r/a)\, (\partial\psi/\partial\theta)$$

From this (again, this is easily generalized for any <u>axisymmetrical</u> $\psi_2$)

$$\alpha = a\sin^2\theta\, [g_1^o(a/r) - (1/2)\bar{g}_1^o(r/a)^2]$$

One then substitutes the expresions derived in part (a). The above provides an alternative derivation of (13a) and (28), or equivalently, of (9).

<u>Problem 6:</u>

(a) Equation (38) is

$$\alpha = - a\sin^2\theta\, [(B_o/2)(r/a)^2 + B_e(a/r)]$$

If the brackets are opened, this is resolved into 2 terms $\alpha_1+\alpha_2$, and their ratio is

$$\alpha_1/\alpha_2 = (B_o/2B_e)(r/a)^3$$

In the Dungeysphere $(r_o/a)^3 = B_e/B_o$ , so that at $r=r_o$ the ratio is 1/2 and the second term is twice the first one. As one moves inward the disparity only

increases, because $\alpha_1$ diminishes while $\alpha_2$ grows.

(b)

If one approximates $\alpha \sim - a \sin^2 r\ B_e\ (a/r)$

then at $\sin^2 0 = 1$, eq. (39b) gives

$$\Phi = - (\Phi_o/B_e)(-\alpha_o)(r/a) \sin\varphi = - (\Phi_o/B_e)(-\alpha_o)(y/a)$$

Since $(-\alpha_o)$ is positive, this gives a constant dawn-to-dusk field, in the direction of $\hat{y}$.

Problem 7:

(a) Let all distances be measured in units of a. The dipole field may be written

$$\underline{B}_d = -\nabla\gamma_d \quad \text{with} \quad \gamma_d = - B_e \cos\theta/r^3 = - B_e\ z/r^4$$

If the constant external field has components $(B_1, B_2, B_3)$, the cartesian components of the total field have all to vanish at the neutral points

$$B_x = B_1 - 3B_e xz/r^5 = 0 \qquad (1)$$

$$B_y = B_2 - 3B_e yz/r^5 = 0 \qquad (2)$$

$$B_z = B_3 - (3z^2 - r^2)B_e/r^5 = 0 \qquad (3)$$

The first two eqs. may be rewritten

$$1/r^5 = (B_1/3B_e)/xz \qquad (4a)$$

$$1/r^5 = (B_2/3B_e)/yz \qquad (4b)$$

assuming $B_2 \neq 0$ and combining

$$x/y = B_1/B_2 = G \qquad (5a)$$

or

$$x = Gy \qquad (5b)$$

This allows x to be eliminated from (3)

$$B_3 - (B_2/3yz)(2z^2 - x^2 - y^2) = B_3 - B_2[2z^2 - y^2(1+G^2)]/3yz = 0 \qquad (6)$$

Let a new variable U and a new constant H be defined:

$$U = z/y \qquad (7) \qquad\qquad H = B_3/B_2 \qquad (8)$$

$$3H - 2U + (1+G^2)/U = 0 \qquad (9)$$

$$U^2 - (3H/2)U - (1+G^2)/2 = 0 \qquad (10)$$

so

$$U = (3/4)H \pm [\ (9/4)H^2 + 2(1+G^2)\ ]^{1/2} \qquad (11)$$

Two solutions exist, of opposite signs. The negative solution however is non-physical, because it implies opposite signs for y and z and therefore, by (4b), a negative value of $r^5$. Hence only a single solution exists, with U>0. Multiplying (4b) by $r^2$

$$1/r^3 = (B_2/3B_e)(x^2+ y^2+ z^2)/yz = (B^2/3B_e)[(1+G^2)/U + U] \qquad (12)$$

which allows r to be derived. Other variables follow readily, e.g. for x

$$r^2 = x^2+ y^2+ z^2 = x^2[1 + (1+U^2)/G^2] \qquad (13)$$

Note that if (x,y,z) is a solution, (-x,-y,-z) is one too, because it leads to identical values of (G,U,r), the intermediate variables form which everything follows.

If $B_2$=0, (2) gives y=0 at the neutral points, but (4a) still holds. Substituting in (3)

$$B_3 - (B_1/3xz)(2z^2 - x^2) = 0 \qquad (14)$$

Let now

$$U' = z/x \qquad (15) \qquad\qquad H' = B_3/B_1 \qquad (16)$$

Then

$$(U')^2 - (3H'/2)U' - 1/2 = 0 \qquad (17)$$

$$U' = 3H'/4 \pm [9(H')^2/4 + 2]^{1/2} \qquad (18)$$

Again, only the positive solution is acceptable, and from it

$$1/r^3 = (B_1/3B_e)(U' + 1/U') \qquad (19)$$

Two symmetric solutions result from this, one with (x,z) and the other with (-x,-z).

<u>Problem 9</u>:

$$\gamma = - a \cos\theta \, [B_e(a/r)^2 + B_o(r/a)]$$

$$B_r = \cos\theta \, [2B_e(a/r)^3 - B_o] = \cos\theta \, F(r)$$

$$B\theta = \sin\theta \, [B_e(a/r)^3 + B_o] = \sin\theta \, G(r)$$

$$B^2 = \cos^2\theta \, F^2 + \sin^2\theta \, G^2$$

$$\partial B^2/\partial\theta = 2 \cos\theta \sin\theta \, (G^2 - F^2)$$ and vanishes if $\theta=\pi/2$, $\cos\theta=0$.

$$\partial^2 B^2/\partial\theta^2 = 2 (\cos^2 r - \sin^2\theta)(G^2 - F^2)$$

If $\theta=\pi/2$, this vanishes only when G = ±F. If G=F then

$$B_e(a/r)^3 = 2B_o$$

$$r/a = (B_e/2B_o)^{1/3} = 2^{-2/3} (r_o/a)$$

which yields the required condition. If G=-F we get (a/r)=0 and hence no solution exists for any finite r.

C Problem 8: Listing of the main program, in FORTRAN.
C

```
      COMMON X0,Y0,Z0,R.,R7,BXI,BYI,BZI,BI,A1,A2,A3,BDIP,S1
     1, X1,Y1,Z1
      DIMENSION P(50,50),F(22)
 1001 FORMAT (8F8.3)
 1002 FORMAT (8F8.0)
 1003 FORMAT ('  BX,BY,BZ OF IMF=',3F8.3,' GAMMA, DIPOLE=',F8.0,
     1 GAMMA'/)
 1004 FORMAT('  STEP IN RE, ', F8.3,'   DIST. TO REF PL=',F8.0/)
 1005 FORMAT ('  POLAR STEP=',F8.3,' DEG, SW SPEED =',F8.0,
     1 MK/S   VOLTAGE UNIT=',F7.0,' VOLT'/)
 1006 FORMAT (F8.3,21F5.0/)
 1007 FORMAT ('  CENTRAL VALUES OF (X,Y) =',2F8.3/)
      READ (5,1001) BXI,BYI,BZI !  components of imf
      READ (5,1001) SL,SP       !  SL in RE is step along field line
C                                negative into north pole. SP is polar
C                                step in degrees.
      READ (5,1001) XIO,YIO     !  Central values of plotted part
C                                of polar cap. To plot entire cap,
C                                use value zero for both.
      READ (5,1002) BDIP,VSW,R9,VOLT  !  dipole term in gamma, SW
C                                speed in km/s, unit in which volt-
C                                ages are measured (2000 v OK)
      WRITE (6,1003) BXI,BYI,BZI,BDIP
      WRITE (6,1004) SL, R9
      WRITE (6,1005) SP, VSW, VOLT
      WRITE (6,1007) XIO,YIO
      BI = SQRT(BXI*BXI + BYI*BYI + BZI*BZI) ! IMF intensity
      R9 = (-1.)*R9    !  for north mag pole dist is negative
      DO 20 J=1,22
   20 F(J) = J-1
      WRITE (6,1006) (F(J), J=1,22)   !labels tabulation
      X9 = R9 * BXI/ BI          !  (X9,Y9,Z9) are coordinates of a
      Y9 = R9 * BYI/ BI          !  point a distance R9 from the
      Z9 = R9 * BZI/ BI          !  origin with r along B
      PI = 3.1415926
      SP = SP * PI/180           !  polar step in radians
      S5 = 6.371                 !  earth radius in 1000s of km
      V0 = VSW * S5/ VOLT        !  IMF potential =
C                       V0 * (BZI * (Y-Y9) - BYI * (Z-Z9))
      DO 30 J1 = 1, 21
      DO 30 J2 = 1, 21
   30 P(J1,J2) = 0.
      DO 200 I1 = 1, 31
      DO 150 I2 = 1, 21
      X0 = XIO + SP * (I1-15) !  (X0,Y0,Z0) is initial point
      Y0 = YIO + SP * (I2-10) !  in the polar cap
      Z0 = 1.
      XI2 = X0
      XL0 = BXI * (X0-X9) + BYI * (Y0-Y9) + BZI * (Z0-Z9)
C                       XL0 is criterion for crossing the reference
C                       plane, where it changes sign.
      L2 = 1.       !   L2=1, no crossing yet, L2=2, plane crossed
      DO 100 I3 = 1, 200
      S1 = SL       !   Re-standardize step size
      XI3 = FLOAT (I3)
      IF (XI3.LT.21) S1 = SL*0.5    !  Initial steps are half size ..
      IF (XI3.LT.6)  S1 = SL*0.25   !  .. or quarter size.
         CALL ADVANCE
      IF (R7.GT.1.0) GO TO 40
 1008    format ('   (I1,I2,I3)=',3I5,'   Radial dist.=',f9.6)
      P(I1,I2) = -2.
      GO TO 150
   40    CALL REFPLANE (XL0,L2,X9,Y9,Z9)
      GO TO (100, 50) ,L2
   50 P(I1,I2) = (V0* (BZI*Y0 - BYI*Z0)) + 100.
C                Plane crossed, evaluate potential, add 100
C                to eliminate negative values.
      GO TO 150
  100 CONTINUE
  110 P(I1,I2) = -1. !  Signifies ref plane not reached in 200
C                       steps.
  150 CONTINUE
      WRITE (6,1006) XI2, (P(I1,K), K=1, 21)
      TYPE 1006, XI2, (P(I1,K), K=1, 21)
  200 CONTINUE
      STOP
      END
```

Problem 8: Listing of subroutines, in FORTRAN.

```
c
      SUBROUTINE BFIELD        !   derives unit vector (A1,A2,A3)
c                              !   along the direction of the field
c
      COMMON XO,YO,ZO,R2,R7,BXI,BYI,BZI,BI,A1,A2,A3,BDIP,S1
     1, X1,Y1,Z1
      R2 = XO*XO + YO*YO + ZO*ZO
      R7 = SQRT(R2)
      R5 = R2*R2*R7
      B1 = BXI + 3.* BDIP * ZO * XO/R5
      B2 = BYI + 3.* BDIP * ZO * YO/R5
      B3 = BZI +(3.* ZO * ZO - R2)* BDIP/R5
      BO = SQRT(B1*B1 + B2*B2 + B3*B3)
      A1 = B1/ BO
      A2 = B2/ BO
      A3 = B3/ BO
      RETURN
      END
c
      SUBROUTINE ADVANCE  !  advances a step along field line
c
      COMMON XO,YO,ZO,R2,R7,BXI,BYI,BZI,BI,A1,A2,A3,BDIP,S1
     1, X1,Y1,Z1
      CALL BFIELD
      X1=XO
      Y1=YO
      Z1=ZO              !  save old point
      XO = XO + S1*A1
      YO = YO + S1*A2
      ZO = ZO + S1*A3          ! first approx., new point.
      IF (Z1.EQ.1.) GO TO 10   ! at 1st step no old pt. exists
        CALL BFIELD
      XO = 0.5 * (XO + X1 + S1*A1)
      YO = 0.5 * (YO + Y1 + S1*A2)
      ZO = 0.5 * (ZO + Z1 + S1*A3)
C                                final approx to new point
   10 RETURN
      END
c
      SUBROUTINE REFPLANE (XLO,L2,X9,Y9,Z9)
c
      COMMON XO,YO,ZO,R2,R7,BXI,BYI,BZI,BI,A1,A2,A3,BDIP,S1
     1, X1,Y1,Z1
      XL1 = XLO                !save old value
      XLO = BXI*(XO-X9) + BYI*(YO-Y9) + BZI*(ZO-Z9)
      XM = XLO * XL1   !      negative when XLO changes sign
      IF (XM) 1,2,3
    1 S2 = S1          !      save old value
      S1 = S1* ABS( XL1/(XL1 - XLO))   !   last step to bring
c                      !        us (almost) to reference plane
      XO = X1
      YO = Y1
      ZO = Z1
        CALL ADVANCE

      XLO = 0.
      S1 = S2    !   Restore standard step
    2 L2 = 2
    3 RETURN
      END
```