https://ntrs.nasa.gov/search.jsp?R=19810017584 2018-07-24T21:32:59+00:00Z

LEVEL II

DTIC
ELECTE
MAY 20 1981
C

AD A099192

PRELIMINARY DESIGN OF A TIP-JET-DRIVEN HEAVY LIFT HELICOPTER INCORPORATING CIRCULATION CONTROL

by

R. E. Head
HUGHES HELICOPTERS, INC.

8

APPROVED FOR PUBLIC RELEASE:
DISTRIBUTION UNLIMITED

AVIATION AND SURFACE EFFECTS DEPARTMENT

DTNSRDC/ASED-81/07

March 1981

DTIC FILE COPY

DAVID W. TAYLOR NAVAL SHIP RESEARCH AND DEVELOPMENT CENTER

BETHESDA
MARYLAND
20084

815

UNCLASSIFIED

SECURITY CLASSIFICATION OF THIS PAGE (When Data Entered)

REPORT DOCUMENTATION PAGE

READ INSTRUCTIONS BEFORE COMPLETING FORM

1. REPORT NUMBER: DTNSRDC/ASED-81/07

2. GOVT ACCESSION NO.

3. RECIPIENT'S CATALOG NUMBER

4. TITLE (and Subtitle): PRELIMINARY DESIGN OF A TIP-JET-DRIVEN HEAVY LIFT HELICOPTER INCORPORATING CIRCULATION CONTROL

5. TYPE OF REPORT & PERIOD COVERED

6. PERFORMING ORG. REPORT NUMBER: HH-80-466

7. AUTHOR(s): R.E. Head, HUGHES HELICOPTERS, INC.

8. CONTRACT OR GRANT NUMBER(s): N00167-80-C-0066

9. PERFORMING ORGANIZATION NAME AND ADDRESS: Hughes Helicopters, Inc., Culver City, California 90230

10. PROGRAM ELEMENT, PROJECT, TASK AREA & WORK UNIT NUMBERS: Program Element 62241N, Task Area WF41.421.091, Work Unit 1600-079

11. CONTROLLING OFFICE NAME AND ADDRESS: Naval Air Systems Command, AIR-320D, Washington, D.C. 20361

12. REPORT DATE: March 1981

13. NUMBER OF PAGES: 45

14. MONITORING AGENCY NAME & ADDRESS (if different from Controlling Office): David Taylor Naval Ship R&D Center, Aviation and Surface Effects Department, Bethesda, Maryland 20084

15. SECURITY CLASS. (of this report): Unclassified

15a. DECLASSIFICATION/DOWNGRADING SCHEDULE

16. DISTRIBUTION STATEMENT (of this Report)

APPROVED FOR PUBLIC RELEASE: DISTRIBUTION UNLIMITED

17. DISTRIBUTION STATEMENT (of the abstract entered in Block 20, if different from Report)

18. SUPPLEMENTARY NOTES

DTIC ELECTE MAY 20 1981 S C

19. KEY WORDS (Continue on reverse side if necessary and identify by block number)

Helicopter
Heavy Lift
Tip Jet
Circulation Control

20. ABSTRACT (Continue on reverse side if necessary and identify by block number)

This report describes a preliminary design study for a Very Heavy Lift Helicopter (VHLH) that is powered by jets at the blade tips and is controlled by circulation control applied to the main rotor blades. The main thrust of the program was to integrate a tip-jet-powered helicopter design computer program developed by Hughes Helicopters, Inc. (HHI) with circulation control data generated by the David Taylor Naval Ship Research and Development Center

(Continued on reverse side)

DD FORM 1 JAN 73 1473 EDITION OF 1 NOV 65 IS OBSOLETE S/N 0102-014-6601

UNCLASSIFIED

SECURITY CLASSIFICATION OF THIS PAGE (When Data Entered)

409164

(Block 20 continued)

(DTNSRDC). This work, which was conducted under Navy contract N00167-80-C-0066, combined the computer program integration work with an air vehicle preliminary design study to size the helicopter and describe its features. The result of this study is the sizing of a four-engined helicopter with a 185-foot-diameter, two-bladed main rotor that is designed to carry the XM-1 Main Battle Tank 100 nautical miles in a ship-to-shore Marine Corps assault mission.

TABLE OF CONTENTS

	Page
LIST OF FIGURES	iv
LIST OF TABLES	v
ABSTRACT	1
ADMINISTRATIVE INFORMATION	1
INTRODUCTION	2
WARM CYCLE/CIRCULATION CONTROL INTEGRATION	10
CONCEPT DEFINITION	14
SENSITIVITY ANALYSIS	32
CONCLUSIONS AND RECOMMENDATIONS	35
REFERENCES	37
BIBLIOGRAPHY	39

Accession For
NTIS GRA&I ☑
DTIC TAB ☐
Unannounced ☐
Justification
By
Distribution/
Availability Codes
Dist | Avail and/or Special
A

LIST OF ILLUSTRATIONS

Figure		Page
1	XH-17	3
2	XHCH-1	3
3	Mi-6	3
4	Mi-12	3
5	CH-54B	3
6	CH-53E	3
7	CH-47D	3
8	XCH-62	3
9	VHLH with XM-1 Main Battle Tank	5
10	VHLH Mission	7
11	VHLH Cargo	8
12	VHLH Mission Profile: Gross Weight Versus Time	13
13	VHLH General Arrangement	15
14	Cockpit Arrangement	17
15	VHLH Propulsion System Schematic	17
16	VHLH Rotor Hub Control Schematic	19
17	VHLH Rotor Hub Planform	20
18	Gas Duct Seal	21
19	VHLH Low-Q™ Insulation Schematic	21
20	Hot Cycle Rotor Blade Section for Heavy Lift Helicopter	23
21	XV-9A Blade Tip Jet Cascade	23
22	Circulation Control Slot Concept	25

LIST OF ILLUSTRATIONS (CONT)

Figure		Page
23	Directional Control System	27
24	VHLH Fuel System Schematic	27
25	Hoist Arrangement	29
26	Cable Lift System	29
27	Jet-Drive/Shaft-Drive Helicopter Size Comparison for VHLH Mission	29

LIST OF TABLES

Tables		Page
1	VHLH Mission for a 60-Ton Payload	6
2	VHLH Payloads	7
3	Circulation Control Airflow and Engine Power	12
4	VHLH Weight Breakdown	16
5	VHLH Size Comparison	30
6	VHLH Sensitivity Analysis	33

ABSTRACT

This report describes a preliminary design study for a Very Heavy Lift Helicopter (VHLH) that is powered by jets at the blade tips and is controlled by circulation control applied to the main rotor blades. The main thrust of the program was to integrate a tip-jet-powered helicopter design computer program developed by Hughes Helicopters, Inc. (HHI) with circulation control data generated by the David Taylor Naval Ship Research and Development Center (DTNSRDC). This work, which was conducted under Navy contract N00167-80-C-0066, combined the computer program integration work with an air vehicle preliminary design study to size the helicopter and describe its features. The result of this study is the sizing of a four-engined helicopter with a 185-foot-diameter, two-bladed main rotor that is designed to carry the XM-1 Main Battle Tank 100 nautical miles in a ship-to-shore Marine Corps assault mission.

ADMINISTRATIVE INFORMATION

The work presented herein was conducted under DTNSRDC Contract N00167-80-C-0066 and Work Unit 1-1600-079-70. The applicable Naval Air Systems Command identification is Project Element 62241N and Task Area WF 41421091.

The views and conclusions contained in this document are not necessarily the policies, either expressed or implied, of the David Taylor Naval Ship Research and Development Center or the U.S. Government. The format is that of Hughes Helicopters, Inc.

INTRODUCTION

Heavy lift helicopters have been a goal of the helicopter industry almost from its beginning. In fact, only ten years after Sikorsky's VS-300 first flew, Hughes Aircraft Company (now Hughes Helicopters, Inc.) took over the development of the XH-17 heavy lift helicopter (Figure 1) and flew it in 1954. The XH-17's 130-foot-diameter main rotor is still the largest ever flown.

In the late 1950's, McDonnell Aircraft Corporation (now McDonnell-Douglas Corporation) almost flew the XHCH-1 heavy lift helicopter (Figure 2), and at about the same time the Russians developed the Mi-6 and the Mi-12 (Figures 3 and 4, respectively). Sikorsky developed the CH-54B (Figure 5) in the early 1960's and brought the CH-53E (Figure 6) into production in the 1970's. Boeing Vertol developed the CH-47D (Figure 7) and was well on the way to flying its own heavy lift helicopter, the XCH-62 (Figure 8), in the early 1970's. Of these, the Mi-6, Mi-12, CH-54B, CH-47D, and CH-53E helicopters are still in service.

All the early heavy lift helicopters had shaft-drive rotors except for the XH-17 and the XHCH-1, which had afterburning cold cycle, tip jet propulsion. The heaviest payload any of these aircraft ever lifted in hover was the 16-ton payload of the CH-53E, although the XCH-62 was designed to lift 22.5 tons.

In terms of efficiency, the XCH-62 would probably have represented the pinnacle of shaft-drive helicopter development; to build significantly larger helicopters it would be necessary to return to the pneumatically driven rotor that started with the XH-17. The reason for this shift in concept lies in the engine-to-rotor power transmission system. In a pneumatically driven helicopter, power is transmitted as heated, compressed gas through lightweight ducting. In a shaft-drive helicopter, a transmission gearbox converts the engine power that is input at high rpm/low torque and delivers it to the main rotor at low rpm/high torque. As the helicopter gets bigger the size, weight, and cost of the transmission increase at a much higher rate than the helicopter size, and soon become limiting factors (Reference 1).

Figure 1. XH-17

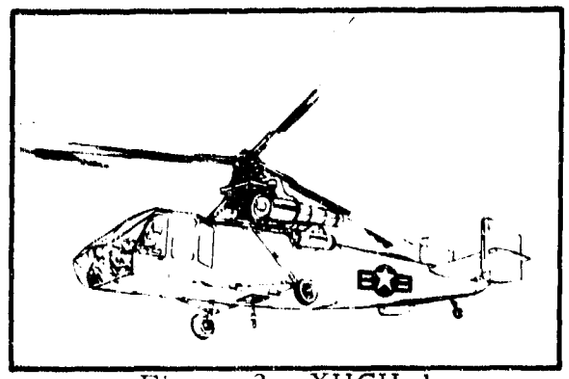

Figure 2. XHCH-1

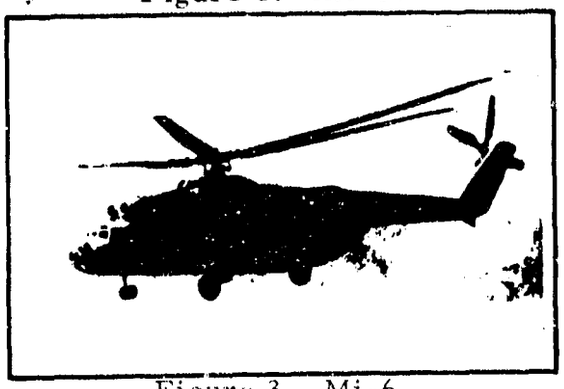

Figure 3. Mi-6

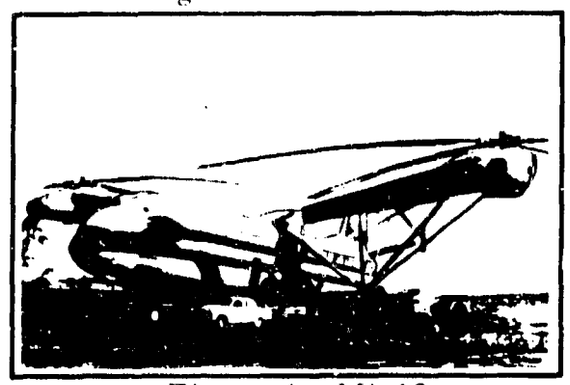

Figure 4. Mi-12

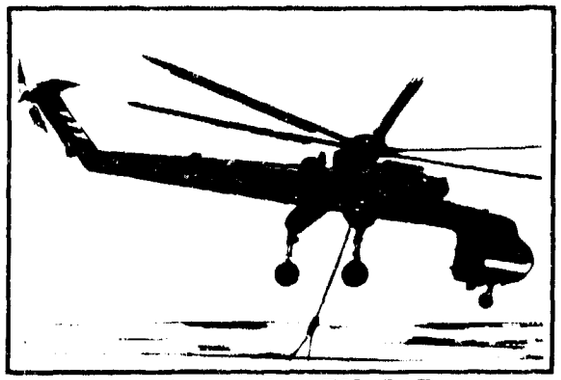

Figure 5. CH-54B

Figure 6. CH-53E

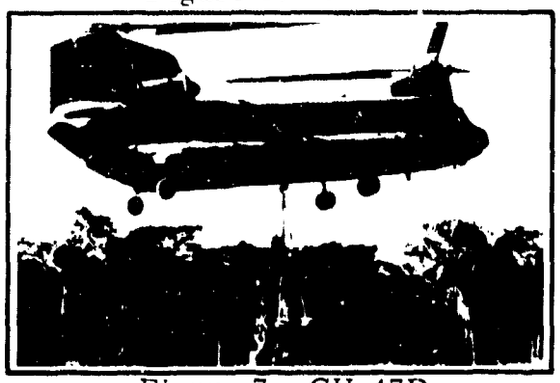

Figure 7. CH-47D

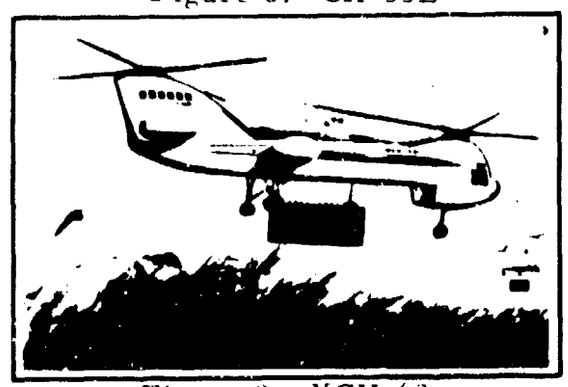

Figure 8. XCH-62

The size and weight constraints on shaft-drive helicopters must be balanced against the reduced thermodynamic efficiency of tip-jet-drive systems. Studies at HHI (Reference 2) have indicated that a crossover in overall efficiency between the two drive systems occurs at a gross weight of approximately 100,000 pounds; below this size, shaft drive is preferred in terms of size and fuel consumption, but above 100,000 pounds jet drive becomes increasingly attractive.

Tip-jet drives have not been practical in the past because of the limitations imposed by available engines and materials. For example, the afterburners at the blade tips of the XH-17 and XHCH-1 were extremely noisy and had a voracious appetite for fuel. The XV-9A Hot Cycle Helicopter flown by HHI in the mid-1960's took a step toward improved jet rotor efficiency by using jet engine exhaust gas ejected at the blade tips to drive the rotor, but this high-temperature gas posed a materials problem for containing it while protecting the rotor structure from the heat.

The development of the low-bypass-ratio turbine engine has made it possible to develop a truly efficient heavy lift helicopter using the "warm cycle." This cycle combines the gases from the core engine and the engine bypass air at a temperature of approximately 900° F, which is relatively easy to accommodate in the rotor structure and results in a tip jet exit velocity that is nearly ideal relative to the blade tip speed.

This sequence of technological development has led to the Very Heavy Lift Helicopter (VHLH) whose preliminary design is described in this report. The VHLH (Figure 9) is designed to transport the 60-ton Main Battle Tank (XM-1) 100 nautical miles from ship to shore to meet a potential Marine Corps assault mission requirement. It is powered by four low-bypass-ratio engines of the Pratt & Whitney F-100 or General Electric F-101 type, and is sized to lift its 60-ton design payload while hovering out of ground effect at sea level, at 90° F, with one engine inoperative.

The VHLH preliminary design work is based on a computerized hot/warm cycle helicopter preliminary design program that HHI developed over a ten-year period during the 1960's and 1970's, and on circulation control research work that the David Taylor Naval Ship Research and Development Center (DTNSRDC) performed during the same period. HHI combined these two concepts for this VHLH preliminary design study and integrated the external aerodynamics, weights, circulation control, and propulsion system aerothermodynamics. The HHI computer program was then used to size the vehicle, determine its performance, and analyze the sensitivity of the design to variations in selected parameters including engine characteristics, rotor disc load, and number of blades.

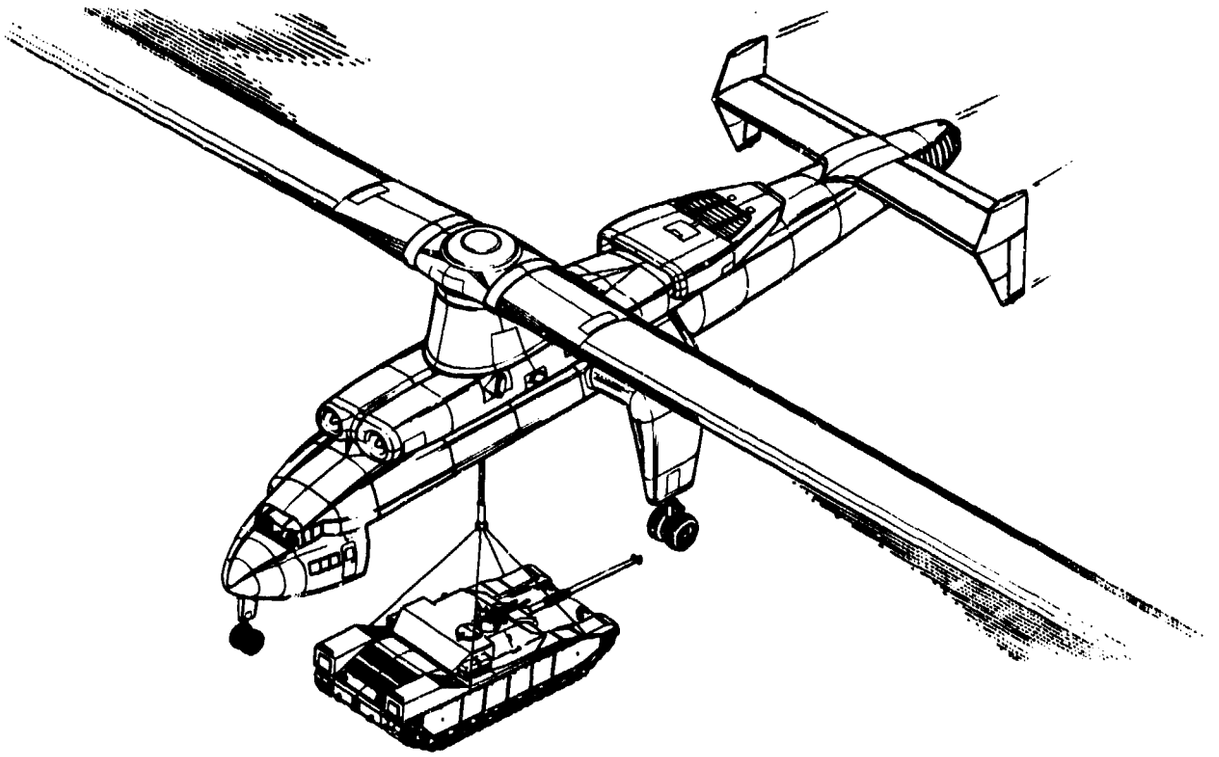

Figure 9. VHLH with XM-1 Main Battle Tank

The basic helicopter was sized to airlift the XM-1 Main Battle Tank according to the mission described in Table 1 and Figure 10. In addition to the XM-1 tank (which is the single heaviest weapon that requires aerial transportation), consideration was given to transporting the other payloads listed in Table 2. Artists' concepts of the VHLH with various cargos are shown in Figure 11. VHLH configuration and system concept layouts were developed to serve as the basis for future design work.

This report addresses the three activities that made up the VHLH study:

- Warm cycle/circulation control integration
- Concept definition
- Sensitivity analysis

A series of steps culminating in a flight evaluation program is also recommended.

Table 1. VHLH Mission for a 60-Ton Payload

Mission Segment	Operation
1	Warmup and takeoff from base (15 minutes)
2	Hover to pick up payload (20 minutes)
3	Cruise to landing zone (100 nautical miles, 60 minutes)
4	Hover to off-load payload (10 minutes)
5	Cruise to base (100 nautical miles, 60 minutes)
6	Hover to land (10 minutes)
7	Land with 30 minutes reserve fuel

Flight Conditions

Mission Segment	Altitude	Temperature
1, 2, 6, 7	Sea Level	90° F
3, 4, 5	3000 ft	91.5° F

One Engine Inoperative Conditions

Level flight at maximum gross weight, 3000 feet, 91.5° F

Hover with design payload, fuel for 15 minutes hover, sea level, 90° F

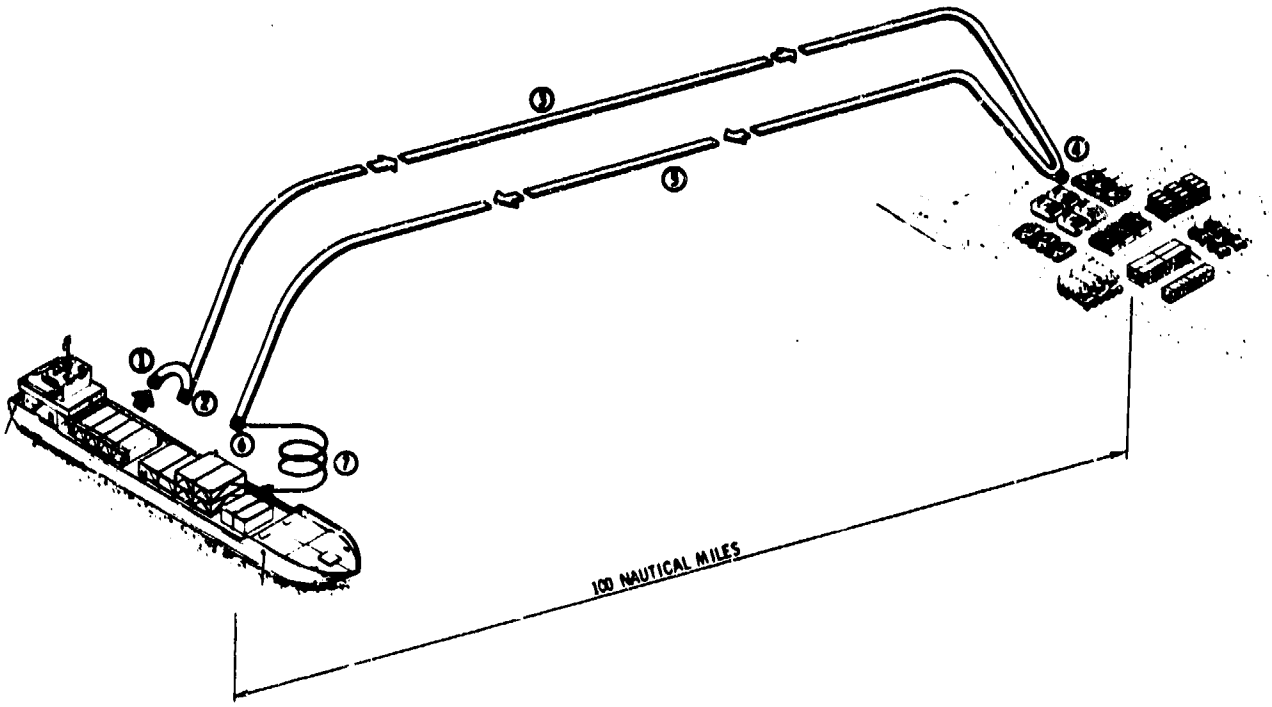

Figure 10. VHLH Mission

Table 2. VHLH Payloads

	Total Weight, tons
• One XM-1 Main Battle Tank	60
• Two M-551 Light Tanks	35
• Two XM-2 Infantry Fighting Vehicles	47
• Four M-113 Armored Personnel Carriers	50
• Two 8 by 8 by 40-foot Cargo Containers	50
• Four 8 by 8 by 20-foot Cargo Containers	48
• One Troop-Carrying Pod with 240 Marines	37

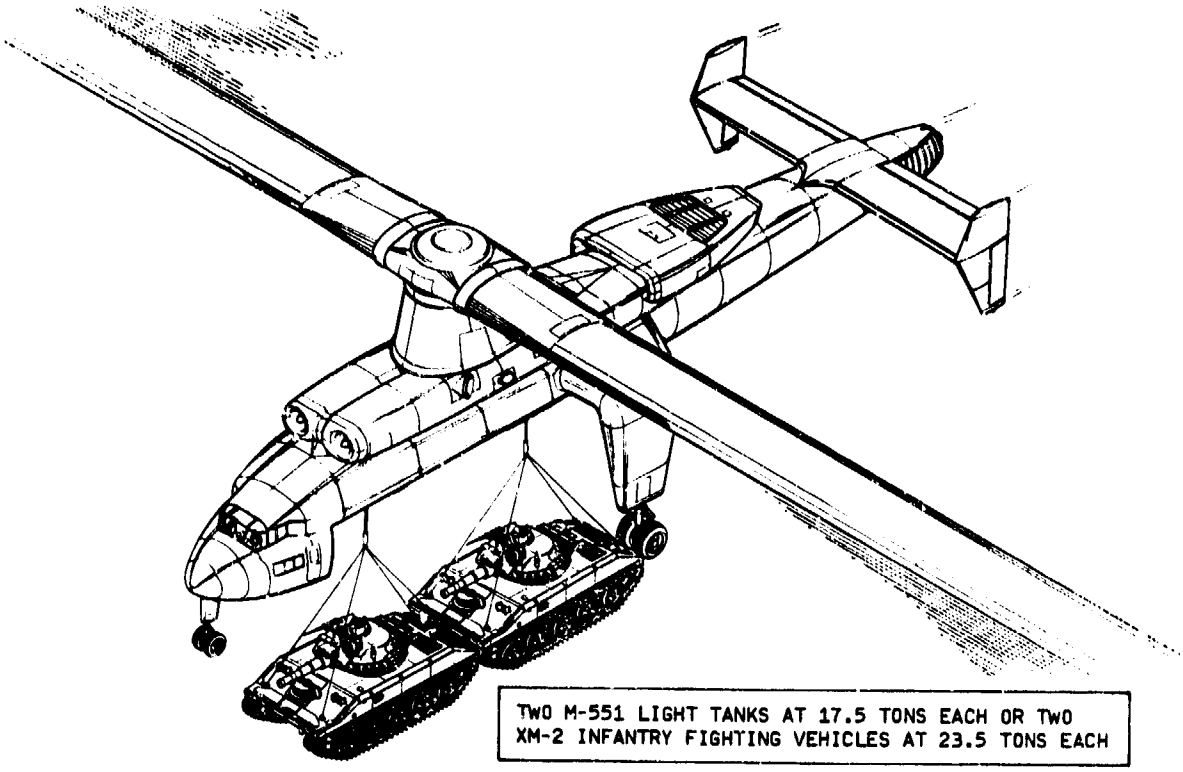

a) M-551 Light Tank or XM-2 Infantry Fighting Vehicle

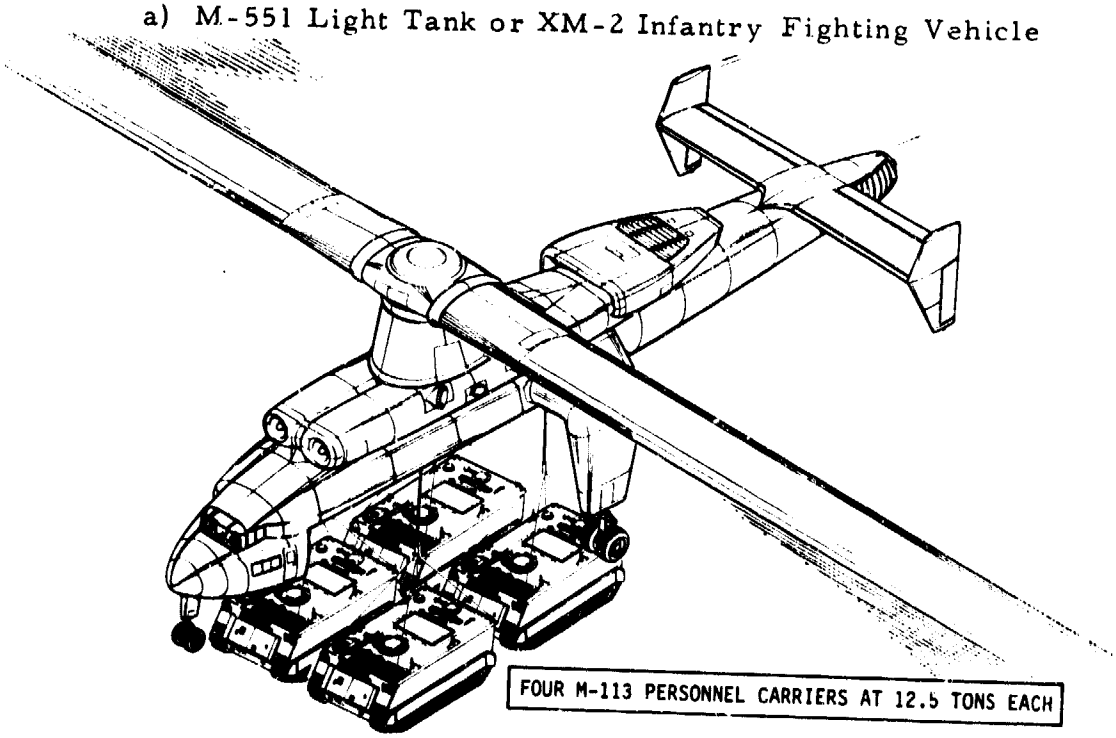

b) M-113 Personnel Carrier

Figure 11. VHLH Cargo (page 1 of 2)

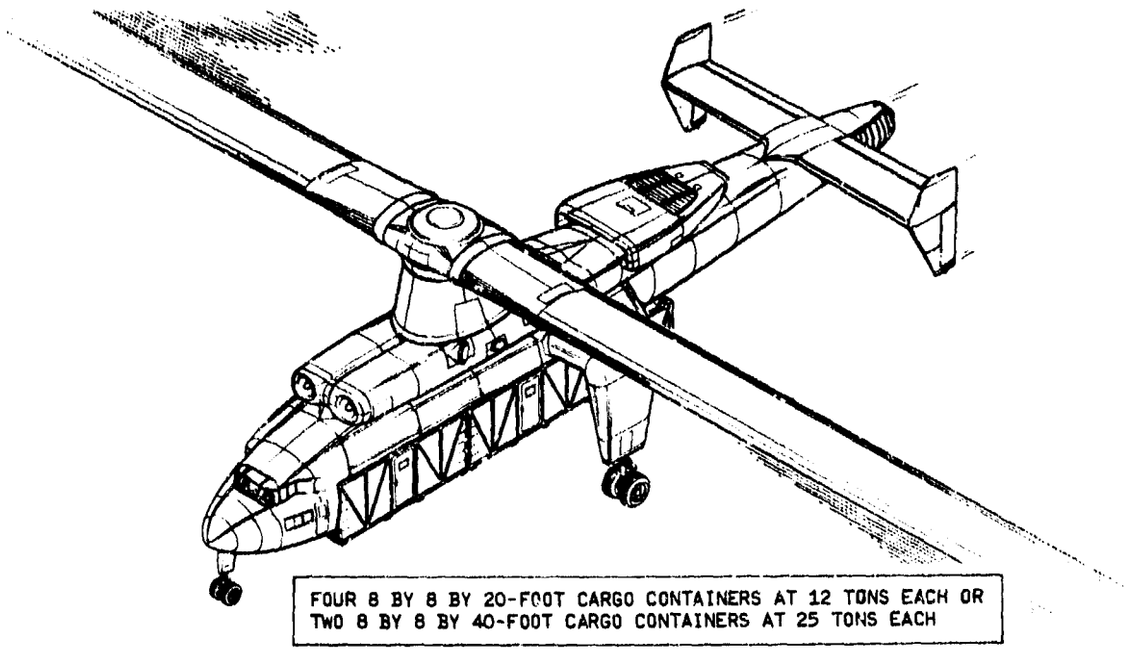

c) Cargo Containers

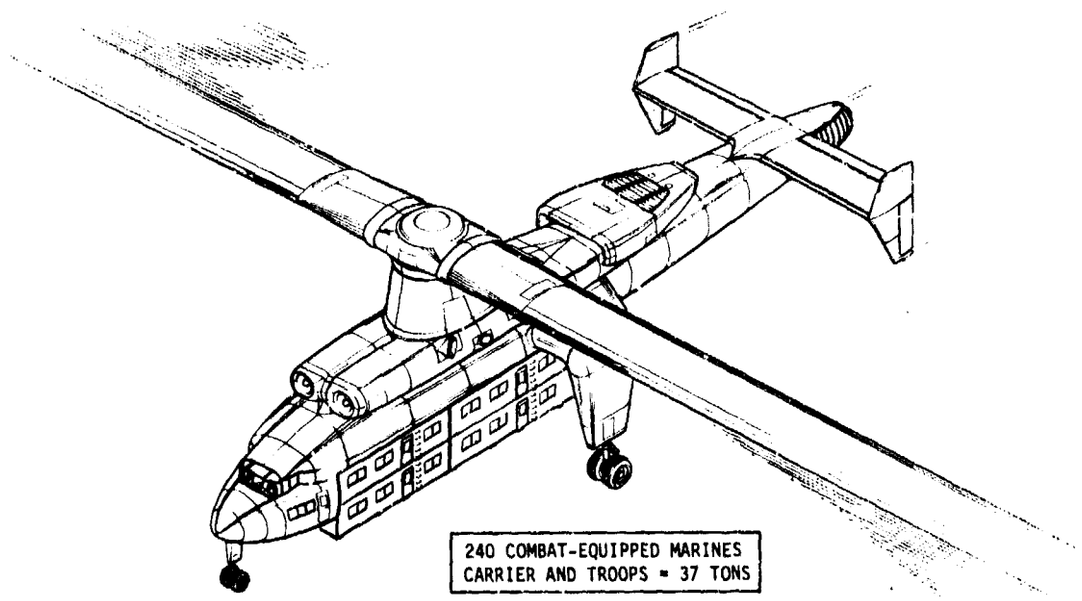

d) Troop Carrier

Figure 11. VHLH Cargo (page 2 of 2)

WARM CYCLE/CIRCULATION CONTROL INTEGRATION

The warm cycle/circulation control program was developed from an existing HHI program devised to compute the mission performance of a warm cycle, tip-jet-driven heavy lift helicopter. In the original work the rotor lift was augmented by a jet flap, and flight control was achieved by conventional collective and cyclic pitch. For the current study the program was first modified to substitute circulation control for the jet flap with blade collective pitch kept constant. Then the flight control function was modified to vary the mass flow passing through the circulation control slot, both collectively and cyclically.

Input data defining helicopter design geometry, engine performance, and mission profile remained unchanged. Data defining performance of the blade airfoil sections with circulation control were supplied by DTNSRDC.

The program was devised to compute the optimum geometry for achieving mission performance. The procedure was iterative, starting with initial estimates for main rotor diameter, collective pitch, and allocation of available engine mass flow to the circulation control slots and propulsive nozzles. During the first pass, hover performance with one engine inoperative was computed to define the gross weight. Component weights were then computed, and computing process control was passed to the design mission subroutine, which managed the computation of the specified mission profile. At each stage of the mission program, control was passed to a rotor performance subroutine for the purpose of defining main rotor trim and the level of power required. The actual main rotor performance was computed using a conventional blade element model to integrate blade motion step by step. Fuel required was computed for each stage and the required payload was found. Gross weight was minimized, and rotor design was optimized by varying key parameters systematically during successive runs. An option was available to optimize the main rotor automatically using iterative procedures.

The functions of the individual computational modules used in the program were:

> <u>JFDES:</u> Main calling program. Calls INTERP and JFPIN to read design and performance data. Calls FLAPDO, WEIGHT, and JFMISS successively to compute mission profile details.

JFPIN: Reads and records all design and performance data except that pertaining to circulation control.

WEIGHT: Computes the breakdown of aircraft weight into major components.

JFMISS: Controls the definition of the design mission. Calls HOVER and FLAPDO.

HOVER: Subsidiary to JFMISS in computing the hover stages of the design mission.

FLAPDO: Controls the computation of main rotor performance. Calls MASS, FDE, and SAPP.

MASS: Computes the internal thermodynamics of a main rotor blade over an engine power range and systematically computes a data package defining the allocation of mass flow to the circulation control slot and propulsive model, after accounting for losses.

FDE: Computes blade motion step by step for cyclical trim using the data package passed by MASS. Calls INTERP to compute blade section lift and drag coefficients.

SAPP: Systematically integrates the six component hub forces after main rotor trim is attained. Calls INTERP to compute blade section lift and drag coefficients.

Subroutines supplied by DTNSRDC:

INTERP: Accepts characteristic data that define mass flow through the circulation control slot and computes blade section lift, drag, and pitching moment coefficients using an internal data package. Calls SMACH.

SMACH: Supplements INTERP. Computes compressibility and Reynolds number corrections to lift, drag, and moment coefficients.

The circulation control airflow to minimize flapping and engine power requirements are given in Table 3. These factors are listed for the individual legs of the mission defined in Table 1 for the two final designs (the F-100 and F-101-DFE engine configurations). Figure 12 shows a plot of aircraft weight versus mission time for the F-101-DFE engine configuration.

Table 3. Circulation Control Airflow and Engine Power

Mission Segments/Requirements[a]		Four F-100 Engine Configuration				Four F-101-DFE Engine Configuration			
		Collective[c]	Cyclic[c] Lateral	Cyclic[c] Longitudinal	Power[d]	Collective[c]	Cyclic[c] Lateral	Cyclic[c] Longitudinal	Power[d]
	Design Hover, one engine inoperative	0.2032	–	–	0.900	0.1936	–	–	0.900
2	First Hover (light)[b]	0.1464	–	–	0.481	0.1480	–	–	0.375
	Second Hover (heavy)	0.1816	–	–	0.832	0.1752	–	–	0.704
3	100-knot Cruise (heavy)	0.1872	0.0896	-0.0358	0.544	0.1936	0.0922	-0.0384	0.433
4	End Hover (heavy)	0.1824	–	–	0.845	0.1752	–	–	0.717
	End Hover (light)	0.1376	–	–	0.444	0.1392	–	–	0.338
5	100-knot Cruise (light)	0.1120	0.0402	-0.0162	0.404	0.1192	0.0443	-0.0165	0.277
6	End Hover (light)	0.1160	–	–	0.375	0.1280	–	–	0.283
7	Reserve Cruise (light)	0.1056	0.0302	-0.0107	0.400	0.1112	0.0337	-0.0110	0.268

[a] See Table 1.

[b] Gross weight condition.

[c] Fraction of total mass flow.

[d] Fraction of normal rated engine power, per engine.

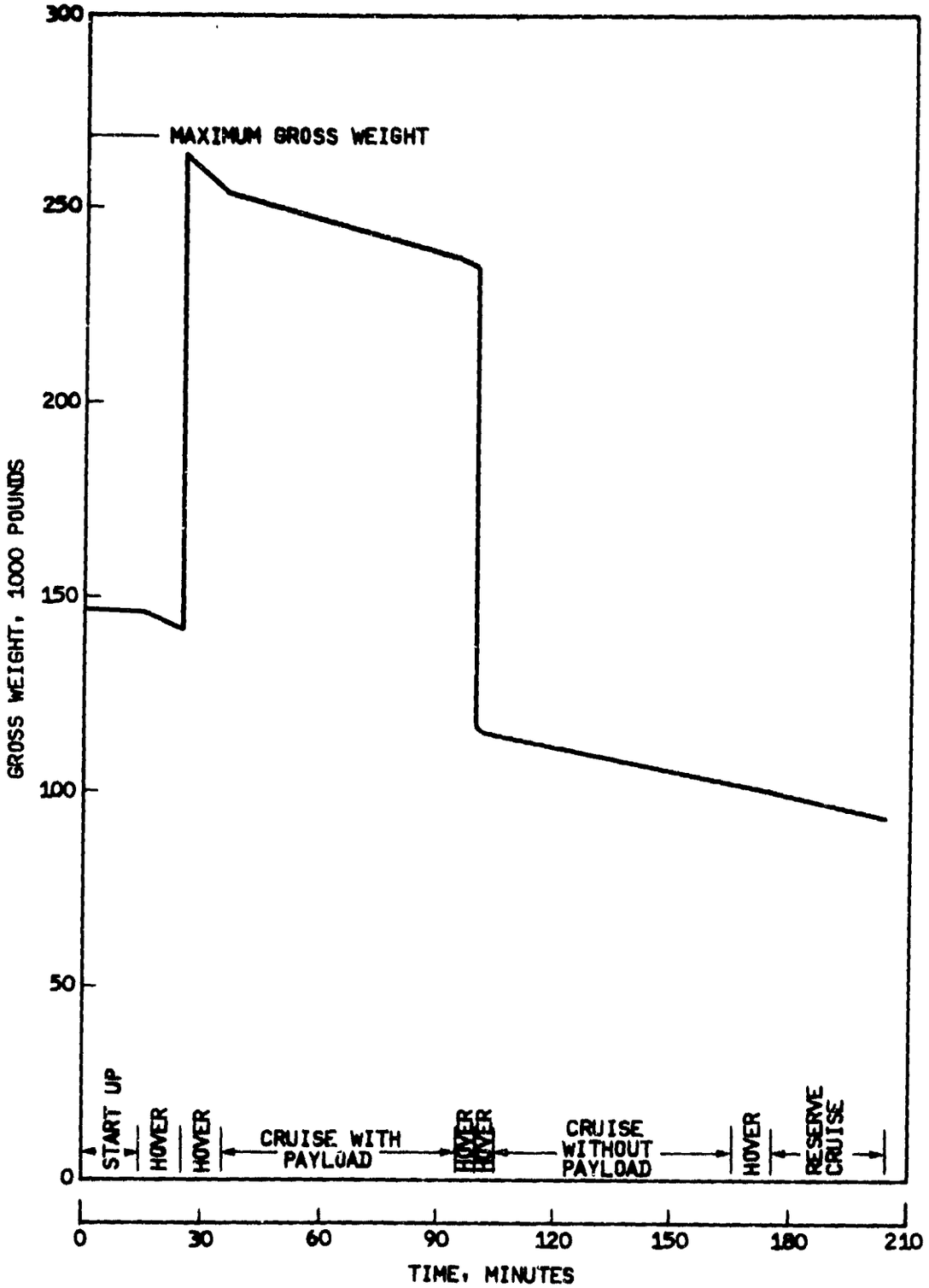

Figure 12. VHLH Mission Profile: Gross Weight Versus Time

CONCEPT DEFINITION

The configuration of the VHLH is the same as that of the CH-54B to a very large extent, as may be seen in Figure 13. Its weight breakdown is given in Table 4. The fuselage is in the form of a hardback structure with a cockpit that droops at the front. The tricycle landing gear has straddled main gear supports, which is an efficient configuration for carrying heavy loads on a sling (Figure 11a) or snugging box-shaped loads against the bottom of the fuselage (Figure 11d).

The cockpit region is a double-deck design with a ladder for passage between decks (see Figure 14). The pilot and copilot fly the helicopter from the upper deck, while the aft-facing lift pilot on the lower deck controls the helicopter during load pickup and deposition. In the region of the upper cockpit occupied by the pilot and copilot, the cockpit width and seat spacing are similar to that of the UH-60A for easy communication between the pilots and good visibility outside the cockpit. Seats for the crew chief and loadmaster are provided on the upper deck, while the lower deck has passenger seats for tank crews or others. A door in the rear bulkhead of the upper cockpit leads to a passage through the fuselage. This passage, along the centerline of the fuselage, is located between the fuel cells that line the sides of the fuselage. It leads to the area occupied by the auxiliary power unit (APU)/tail fan drive engines (two Detroit Diesel Allison 250-C20B turboshaft engines). From this passage, access is provided to the top of the fuselage for engine and rotor inspection and maintenance.

The main engines are placed fore and aft of the main rotor with their exhaust ends pointed toward the rotor, as shown schematically in Figure 15. This means that the aft engines are placed "backwards" compared with conventional installations, and receive their inlet air through a plenum. On the "back" of each engine is a rotary diverter valve that directs the exhaust/bypass air of that engine either overboard or to the rotor. The "overboard" position is chosen for starting the engine and is also used if the engine becomes inoperative (to prevent backflow through the engine). In the "rotor" position, the gas is directed into a common plenum and up to the rotor through an annular duct.

A two-bladed main rotor is chosen for the VHLH on the basis of four considerations:

- Sensitivity analysis shows the two-bladed rotor to result in a smaller, lighter weight vehicle than a three-bladed rotor does.

MAIN ROTOR	
DIAMETER, FEET	185
CHORD, INCHES	117
NUMBER OF BLADES	2
DISC LOAD, POUNDS PER SQUARE FOOT	10
DIMENSIONS, FEET	
FUSELAGE LENGTH	94
WIDTH	16
OVERALL HEIGHT	42
LANDING GEAR TREAD	25
WHEELBASE	43
HORIZONTAL TAIL SPAN	34
POWERPLANT	
F-101-DFE (GENERAL ELECTRIC)	4
250-C20B (DETROIT DIESEL ALLISON)	2

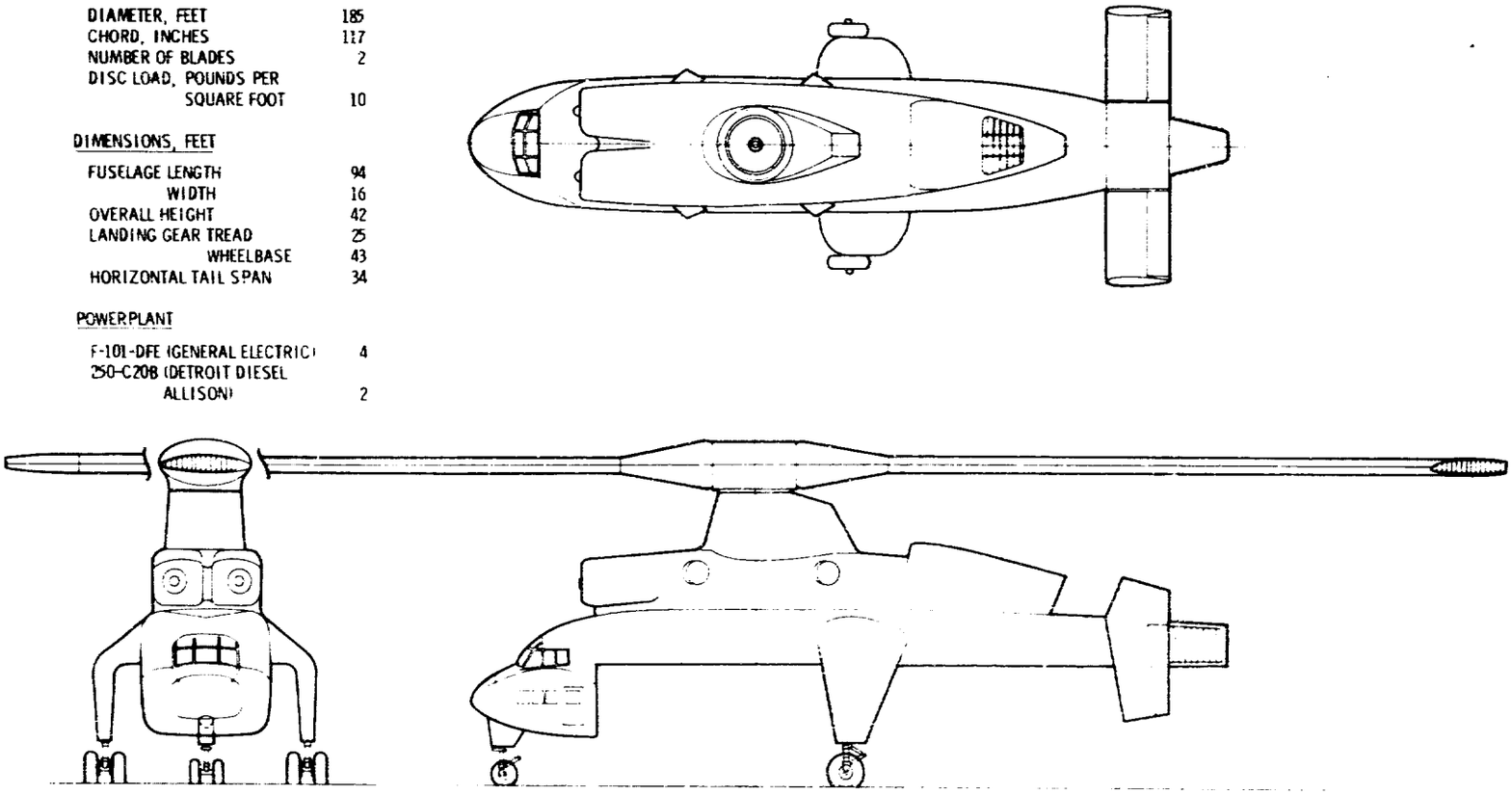

Figure 13 VHLH General Arrangement

Table 4. VHLH Weight Breakdown

Helicopter Components	Weight, pounds
Main Rotor	23,800
Fuselage	12,200
Landing Gear	17,200
Propulsion Group	20,300
Flight Controls	3,000
Fuel System	4,200
Electrical, Hydraulics, Pneumatics, Instruments, and Avionics	3,400
Yaw Control	1,000
Air Conditioning and Anti-icing	500
Furnishings and Equipment	1,600
Cargo Handling	4,100
Empty Weight	91,300

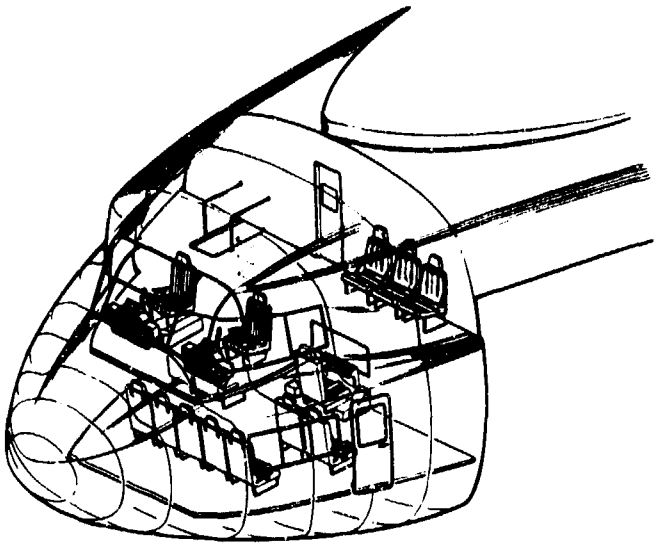

Figure 14. Cockpit Arrangement

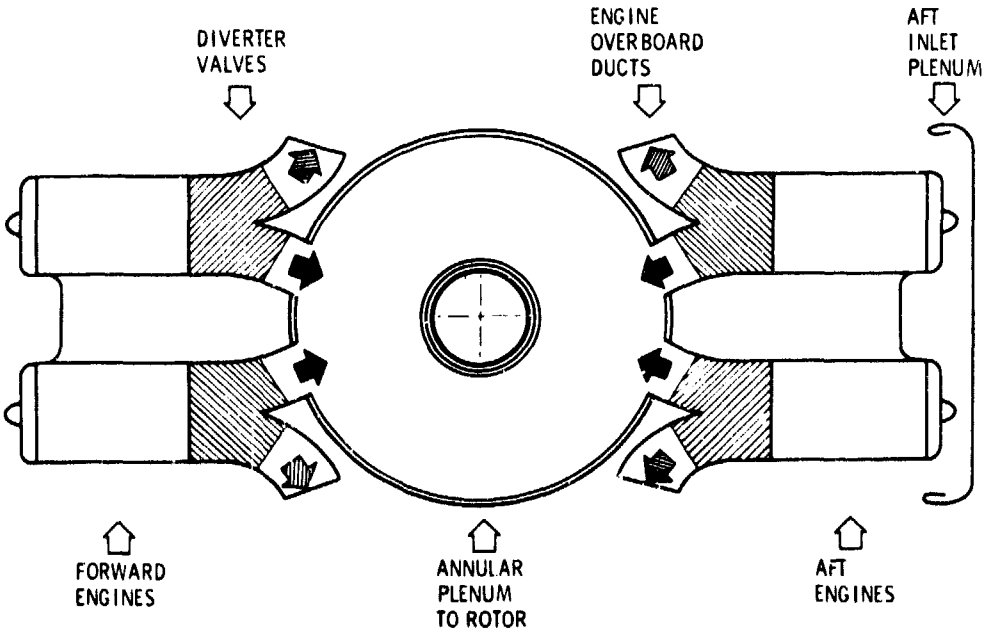

Figure 15. VHLH Propulsion System Schematic

- The hub, blades, and gas ducts are simplified.
- Blade droop is minimized.
- Stowage on the deck of a ship is simplified because the rotor need not be folded.

In hover at the design gross weight, the rotor has a coning angle of approximately 9 degrees. The cyclic portion of the circulation control (Table 3) is selected to reduce the cyclic flapping to zero in cruise.

The rotor is mounted on the top of the pylon structure, which is in turn mounted atop the fuselage between the engines and around the rotor supply gas duct as shown schematically in Figure 16. A thrust bearing of diameter large enough to surround the gas duct attaches the rotor hub to the pylon. The rotor hub, shown in Figures 16 and 17, has offset elastomeric flapping hinges — four for each blade, with two forward and two aft of the gas duct that goes into each blade. The gas duct from the hub into the blade incorporates a spherical seal whose center is on the flapping axis. A seal similar to the one developed for the XV-9A helicopter (Reference 3) is proposed for the VHLH (Figure 18).

A droop stop, which is not shown, will be required to support the blade when the rotor stops turning.

The rotor blade is mounted from the flapping hinge at a fixed collective pitch angle. In this circulation-controlled rotor, the cyclic and collective pitch control function is achieved pneumatically — there is no mechanical cyclic or collective pitch control. The rotor blade is a hollow honeycomb sandwich structure with internal ducts for propulsion and control gases. The blade is insulated with LOW-Q™ metallic insulation inside the gas ducts as shown schematically in Figure 19, and in a hot cycle helicopter blade mockup shown in Figure 20. LOW-Q™ is an HHI-patented material that in concept is a stainless steel wool insulating layer encapsulated inside a protecting stainless steel wire fabric. It is bonded to the inner surface of the blade.

A cascade at the blade tip, similar to that of the XV-9A (Figure 21), accelerates the propulsion gas from the 0.4 duct Mach number to sonic velocity while turning it to exit toward the rear of the blade. The circulation control air exits along the trailing edge of the blade through a fixed-gap slot as shown in Figure 22.

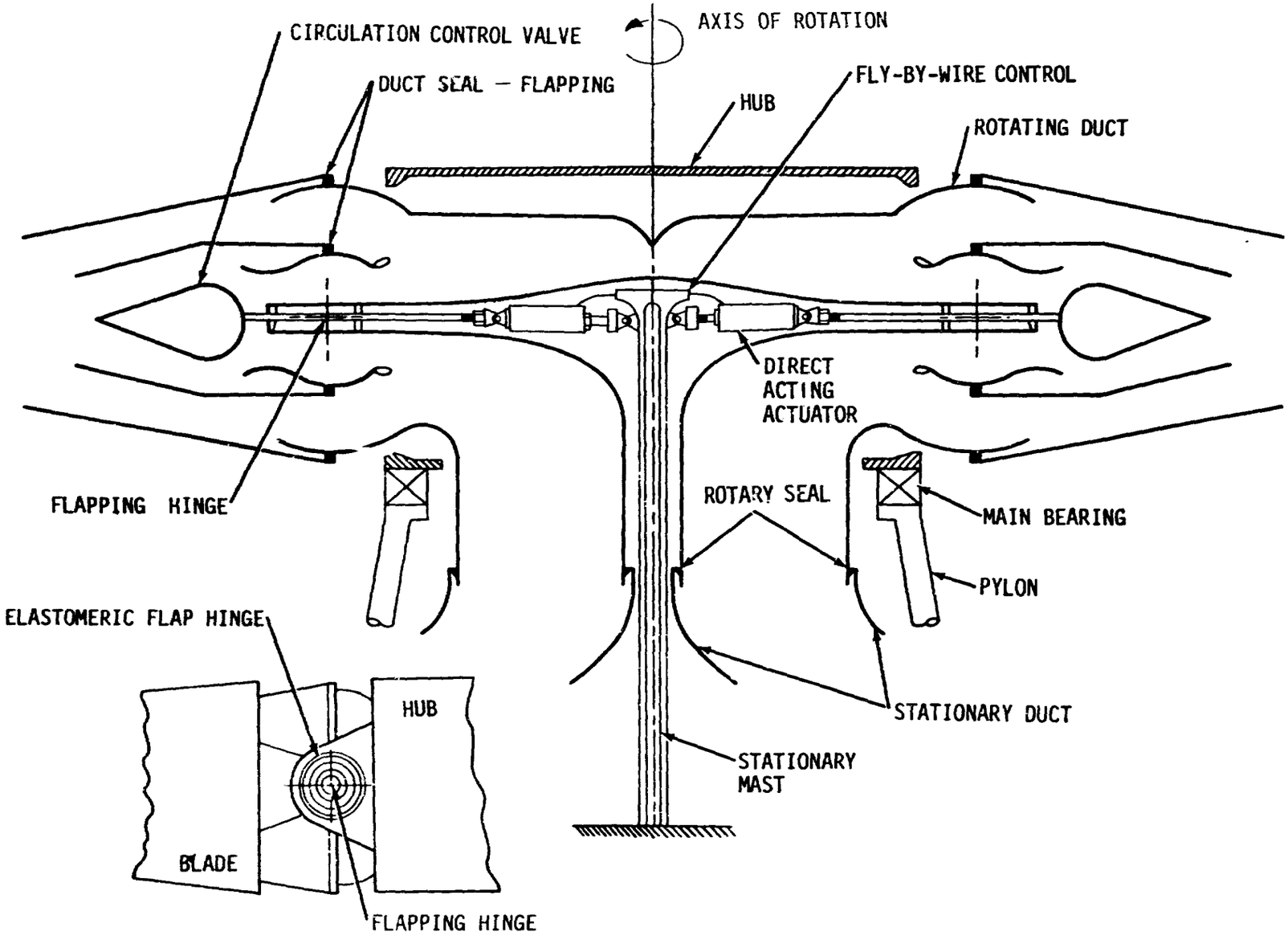

Figure 16. VHLH Rotor Hub Control Schematic

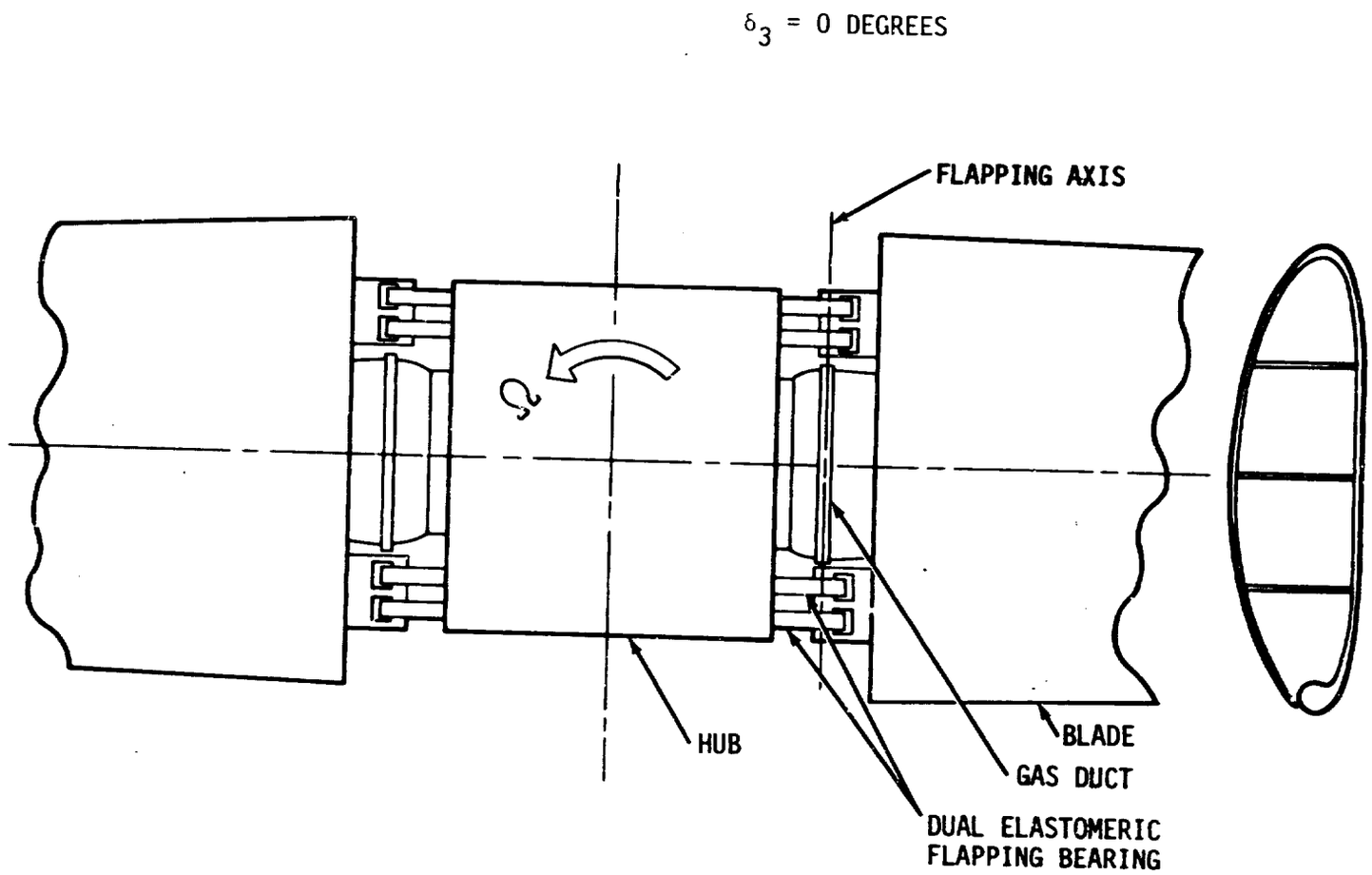

Figure 17. VHLH Rotor Hub Planform

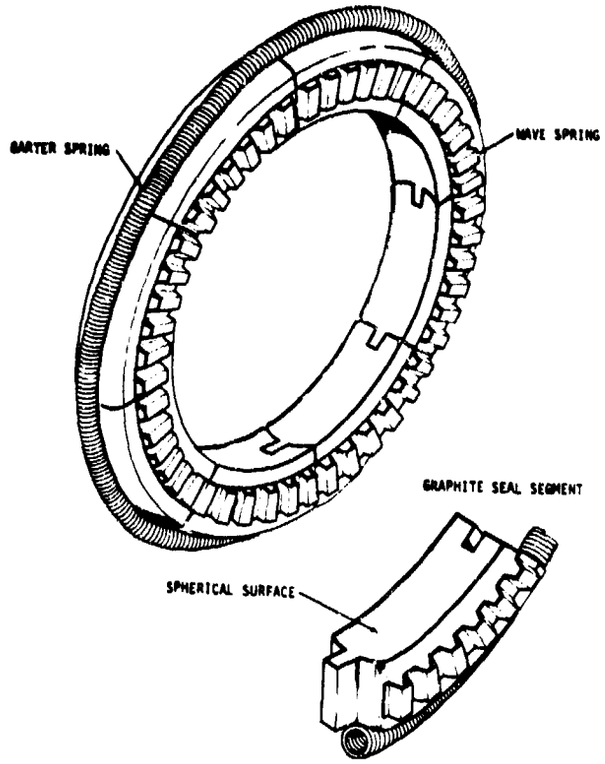

Figure 18. Gas Duct Seal

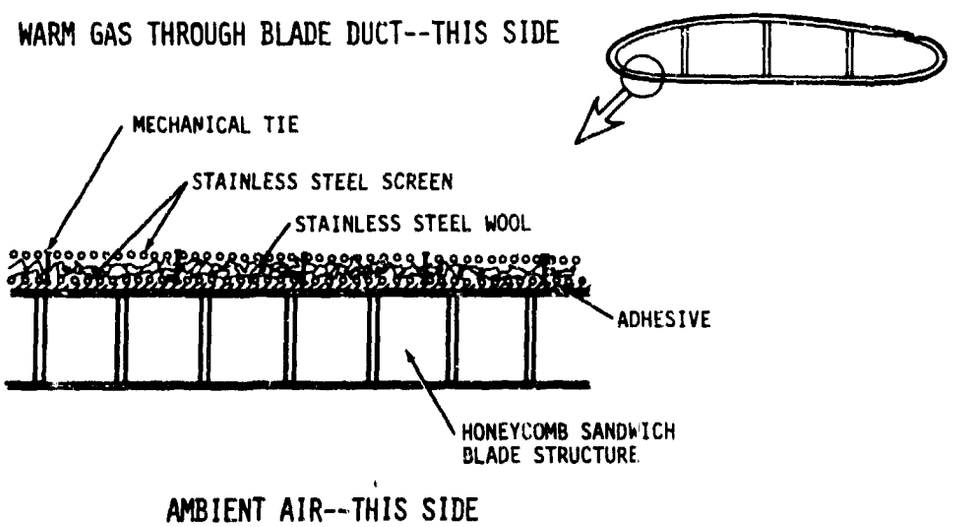

Figure 19. VHLH Low-Q™ Insulation Schematic

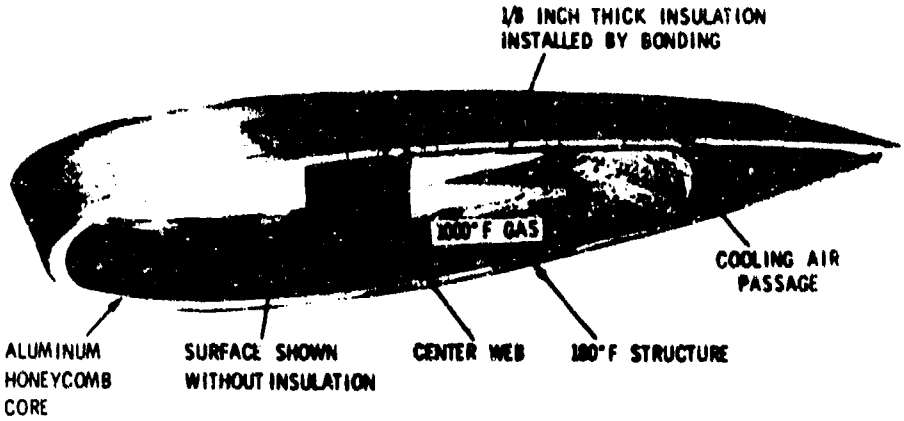

Figure 20. Hot Cycle Rotor Blade Section for Heavy Lift Helicopter

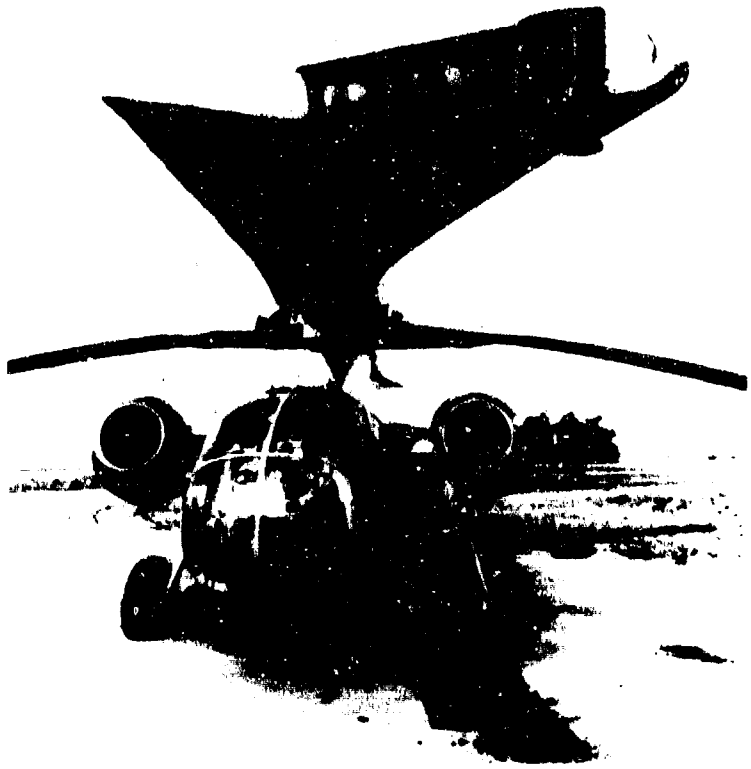

Figure 21. XV-9A Blade Tip Jet Cascade

PRECEDING PAGE BLANK-NOT FILMED

SLOT HEIGHT RATIO = 0.15 PERCENT CHORD

SLOT SPAN = 30 TO 97 PERCENT RADIUS

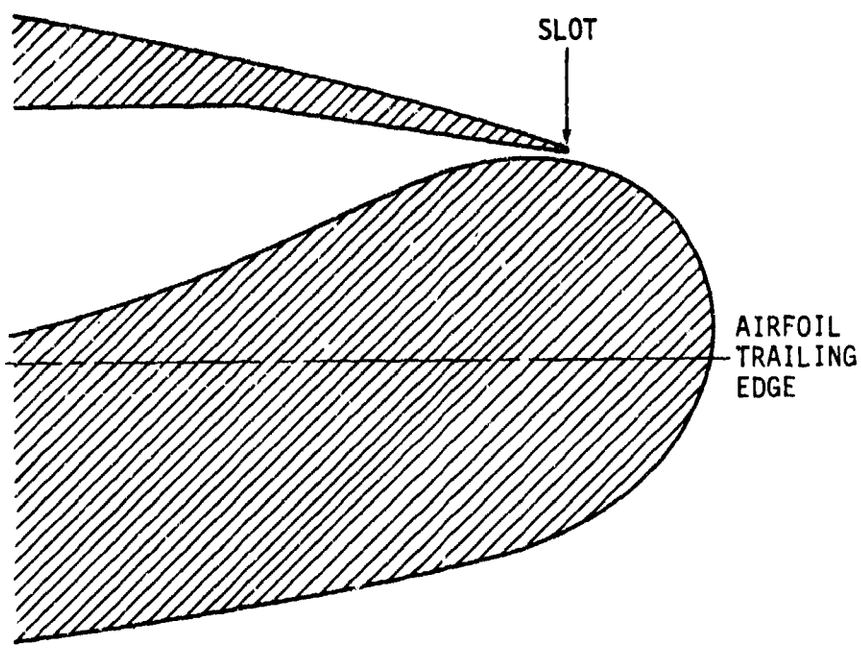

Figure 22. Circulation Control Slot Concept

Circulation control is achieved by throttling the gas admitted to the inboard end of the blade in such a way that 75 to 95 percent of the gas goes to the tip jet while 25 to 5 percent goes to the circulation control slot. A candidate circulation control mechanism is shown in Figure 16. Direct-acting dual hydraulic acutators control a valve that is nearly coincident with the flapping hinge of each blade to modulate the circulation control airflow. A fly-by-wire or fly-by-light system is envisioned for transferring cockpit control signals to the control actuators. Superimposed on the pilots' inputs will be a higher harmonic control to minimize vibrations.*

Directional control requirements for the jet rotor helicopter are minimal because conventional main rotor shaft torque counteraction is not required--only steering control is needed. This VHLH design includes directional control provided by a fan that is buried in the aft fuselage (Figure 23). Air is taken in through the top of the aft engine inlet plenum fairing and is exhausted through controllable louvers in the sides of the tail cone. Two Detroit Diesel Allison 250-C20B engines drive the controllable pitch fan; they also serve as APUs to supply electric and hydraulic power when the main engines are not operating.

The rotor of this helicopter must be guarded against a loss of circulation control gas because without it, the fixed-pitch rotor would be uncontrollable. With four main engines and the ability to fly the design payload with one engine inoperative, the risk associated with one inoperable engine is minimal. To protect against total fuel starvation, the fuel system sketched in Figure 24 is proposed. It has a small tank from which fuel is supplied to the engines, and which in turn is continuously kept full of fuel pumped from the main tanks. It is suggested that the small tank contain a 15-minute fuel supply to permit a safe landing with all other tanks empty.

Another way to ensure a supply of circulation control air would be to provide a compressor geared to the main rotor in the manner of the Kaman H2-CCR helicopter. However, this brings back the problem of transmission and compressor size, weight, and cost. Because approximately 10,000 horsepower is needed for this function, it is considered impractical.

---

*Higher harmonic control of two-bladed rotors cannot in practice reduce both vibration and retreating blade stall (References 4 and 5). In this VHLH rotor, retreating blade stall is not expected to be a problem because of the relatively low 100-knot maximum speed and the very high blade lift coefficient generated by circulation control. Higher harmonic control is therefore expected to function well because it is required to minimize only the vibrations.

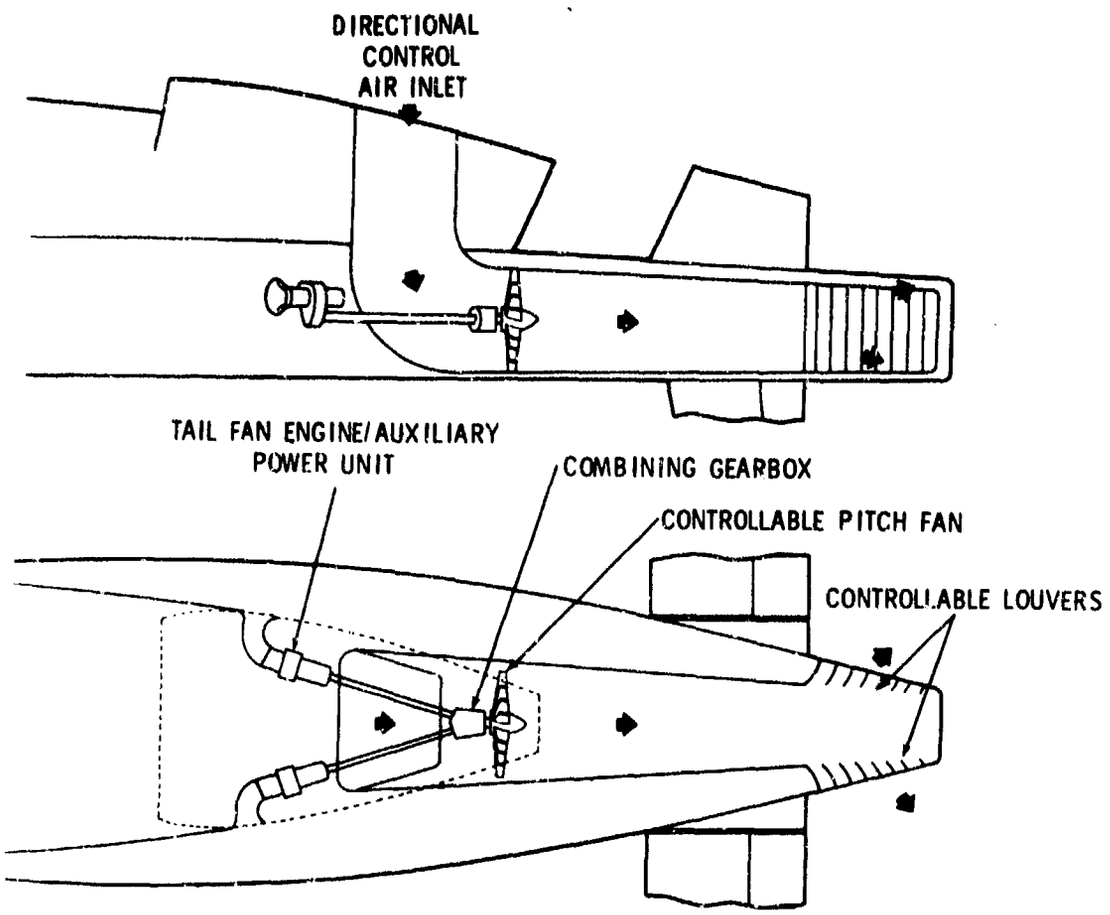

Figure 23. Directional Control System

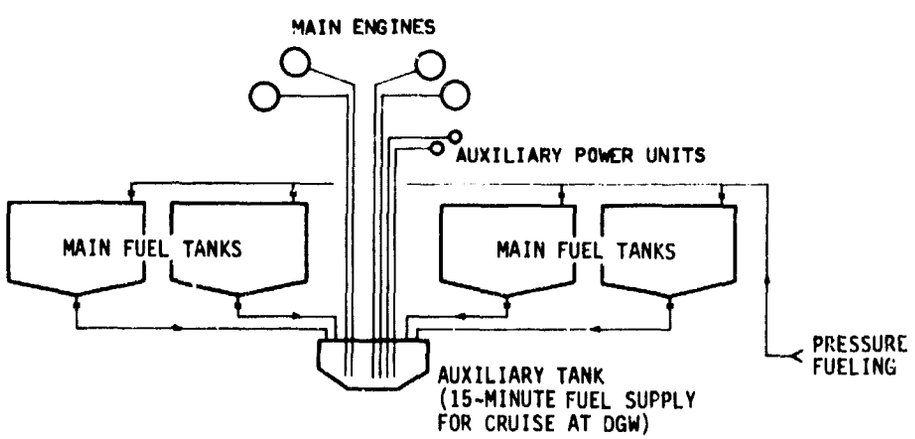

Figure 24. VHLH Fuel System Schematic

Control of this helicopter, referenced to the requirements of Reference 6 (Section 3.2.13), is very good. However, the specification appears to be inappropriate for such a large helicopter. For example, the specification requires an excursion in pitch angle of only 0.03 degree in the first second following a 1-inch cyclic stick displacement. With the 5 percent flapping hinge offset proposed for the VHLH, its pitch response characteristic is 3.6 degrees in the first second (for comparison, the YAH-64 helicopter, whose gross weight is 6 percent of that of the VHLH, achieves approximately 10 degrees in the same time).

The hoist system for the VHLH is envisioned as a two-mode system. A series of hoists, each capable of reeling in or out a 5-ton load, would be located approximately as shown in Figure 25. The hoists labeled Ⓐ would lift the cargo containers and the troop pod. The hoists labeled Ⓑ and Ⓒ would be used to carry heavy loads on fixed-length cables, with the hoists serving a reefing function — the actual load would be carried by the cable only (for example, the 60-ton Main Battle Tank) as Figure 26 indicates.

Although this warm cycle VHLH is a very large vehicle, it is still relatively small compared with a shaft-drive helicopter built to perform the same mission, assuming that a transmission could be built for such a machine, which is very doubtful considering the torque it would have to handle. It was assumed that a multiple installation of engines with the characteristics of the Detroit Diesel Allison KT-701 engine that powered the Boeing Vertol XCH-62 heavy lift helicopter would be used. The warm cycle and shaft-drive helicopters sized to transport the Main Battle Tank are compared in Table 5 and Figure 27. This comparison is based on HHI preliminary equations for the various helicopter components. These equations show some reduction in size and weight for the tandem-rotor, shaft-drive helicopter as opposed to the single-rotor, shaft-drive machine, but both are larger, heavier, and consume more fuel than the jet-drive helicopter does for the same VHLH mission.

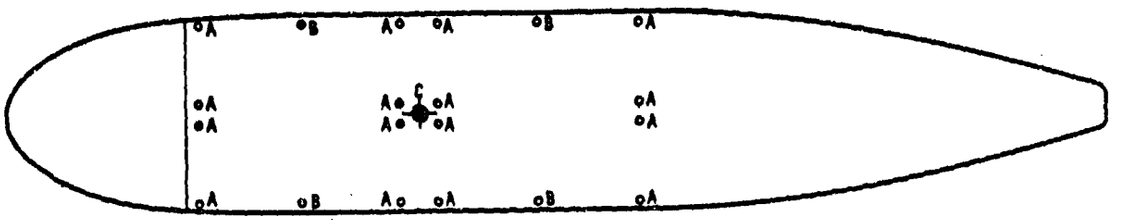

Figure 25. Hoist Arrangement

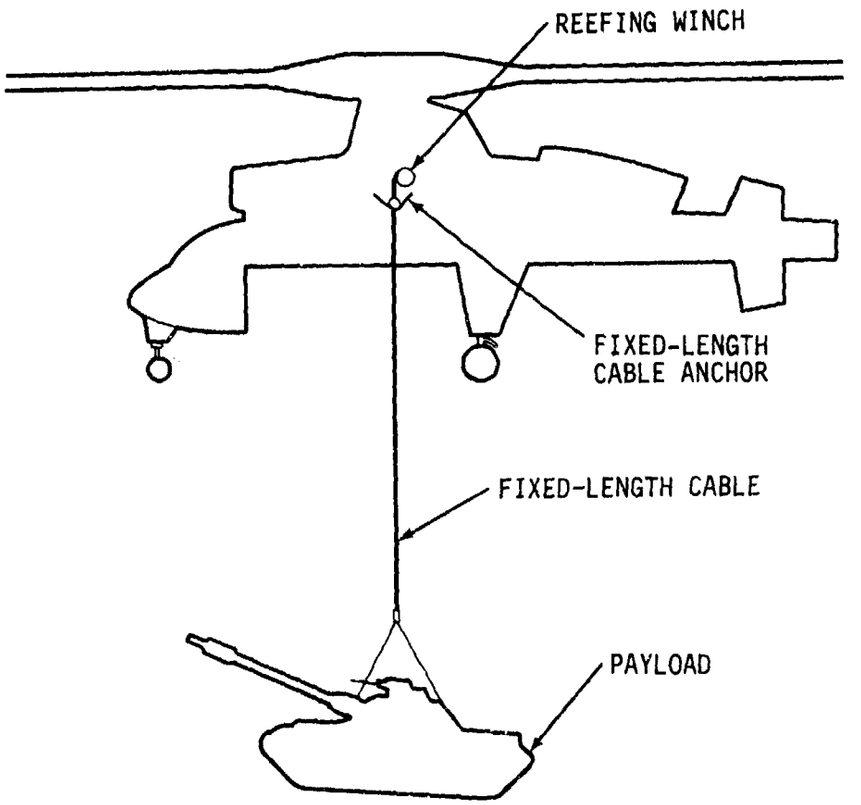

Figure 26. Cable Lift System

Table 5. VHLH Size Comparison

Characteristics	Warm Cycle	Shaft Drive	
		Single Rotor	Tandem Rotor
Diameter, feet	185	246	160[a]
Chord, feet	10	10	10
Thickness Ratio, percent	20	12	12
Number of Blades	2	6	4[a]
Length Overall (rotors turning), feet	185	279	280
Engine (four)	F-101-DFE	T-701 Type	T-701 Type
Payload, tons	60	60	60
Gross Weight, pounds	268,000	475,000	390,000
Empty Weight, pounds	91,000	246,000	189,000
Miscellaneous Weight, pounds	3,000	3,000	3,000
Fuel Weight, pounds	54,000	105,000	78,000

[a]Each rotor.

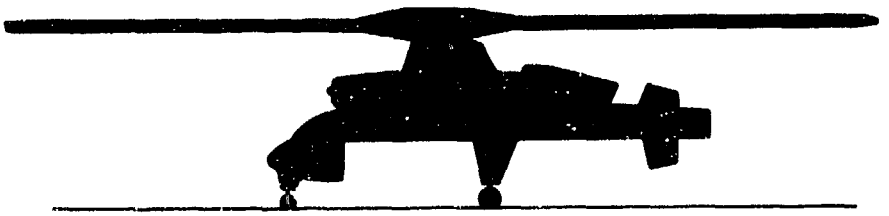

SINGLE ROTOR, JET DRIVE

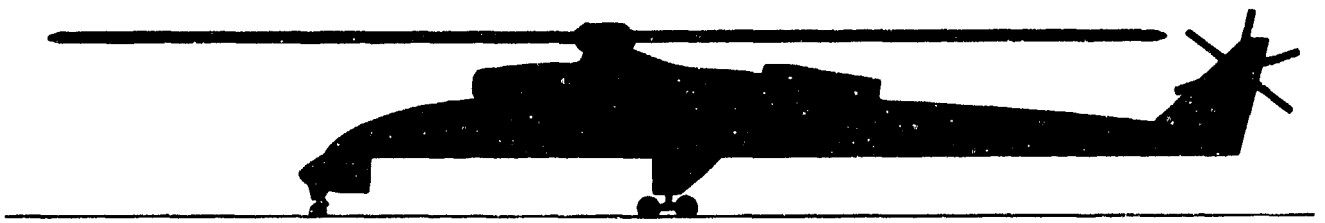

SINGLE ROTOR, SHAFT DRIVE

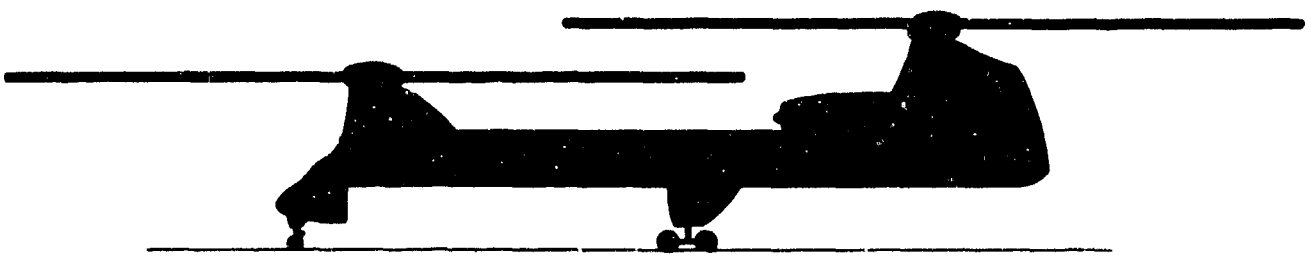

TANDEM ROTOR, SHAFT DRIVE

Figure 27. Jet-Drive/Shaft-Drive Helicopter Size Comparison for VHLH Mission

SENSITIVITY ANALYSIS

The configuration used as the basis for the work in which the warm cycle/circulation control features were integrated was:

Engines: six Pratt & Whitney F-100

Number of blades: two

Rotor tip speed: 700 feet per second

Rotor disc loading: 10 pounds per square foot

Circulation control slot height ratio: 0.15 percent chord

Collective pitch at 3/4 radius: -6 degrees

The parameters were varied for the specified mission as shown in Table 6. The rotor size, gross weight, and fuel weight were iterated to achieve the 60-ton payload but, because of the limited scope of the study, absolute convergence on the 60 tons was not reached in all cases. A close enough approach was made, however, to demonstrate the effects of the various parameter comparisons. The major points that the sensitivity analysis revealed are:

- A two-bladed rotor results in a smaller, lighter weight vehicle that uses less fuel than one with three blades (Configurations 1 and 2).

- A 700-foot-per-second tip speed is preferable to a tip speed of 750 feet per second for minimizing the size and weight of the helicopter (Configurations 5 and 7). Lower tip speeds were not investigated.

- The fixed collective pitch setting should be as close to zero degrees as is consistent with avoiding zero circulation control airflow (Configurations 2, 5, and 6). From a maneuverability standpoint, -2 degrees is considered to be the limit.

- Circulation control slot height was not a significant parameter in this study, for which the rotor disc loading was specified to be 10 pounds per square foot (Configurations 2, 3, and 4).

Table 6. VHLH Sensitivity Analysis

Comparison	Configuration	Inputs							Outputs					
		Engine	Number of Engines	Number of Blades	Rotor Radius, ft	$\theta_{3/4}$, deg	Slot Height, percent chord	Tip Speed, ft/sec	Blade Chord, in.	Payload, tons	Gross Weight (1000 lb)	Empty Weight (1000 lb)	Fuel (1000 lb)	Disc Loading, lb/ft^2
Number of Main Rotor Blades	1	F-100	6	3	105	-6	0.15	700	113	60.7	330	124	82	9.6
	2	F-100	6	2	99	-6	0.15	700	139	61.0	305	109	71	10.0
CCR Slot Height Ratio	3	F-100	6	2	99	-6	0.10	700	139	61.3	305	109	70	10.0
	2	F-100	6	2	99	-6	0.15	700	139	61.0	305	109	71	10.0
	4	F-100	6	2	99	-6	0.20	700	139	60.6	305	109	72	10.0
Collective Pitch Angle	2	F-100	6	2	99	-6	0.15	700	139	61.0	305	109	71	10.0
	5	F-100	6	2	99	-4	0.15	700	139	62.2	305	109	69	10.0
	6	F-100	6	2	99	-2	0.15	700	139	63.5	305	109	66	10.0
Rotor Tip Speed	5	F-100	6	2	99	-4	0.15	700	139	62.2	305	109	69	10.0
	7	F-100	6	2	99	-4	0.15	750	139	60.4	305	110	72	10.0
Number of Engines	6	F-100	6	2	99	-2	0.15	700	139	63.5	305	109	66	10.0
	8	F-100	5	2	95	-2	0.15	700	126	61.8	282	97	59	10.0
	9	F-100	4	2	113	-2	0.15	700	113	60.0	268	92	53	6.7
Type of Engine	9	F-100	4	2	113	-2	0.15	700	113	60.0	268	92	53	6.7
	10	F-101	4	2	93	-2	0.15	700	117	60.0	268	91	54	10.0

- Reducing the number of engines results in a lighter weight helicopter, but the rotor size increases (Configurations 6, 8, and 9).

- F-101-DFE engines used in place of F-100 engines reduce the rotor radius (Configurations 9 and 10).

Based on the results of this study, the following configuration is recommended for further study:

Engine, F-101-DFE: four*

Number of blades: two

Rotor diameter: 185 feet

Blade chord: 117 inches

Blade twist: -8 degrees

Blade thickness: 20 percent

Rotor tip speed: 700 feet per second

Rotor disc loading: 10 pounds per square foot

Circulation control slot height ratio: 0.15 percent chord

Collective pitch at 3/4 radius: -2 degrees

*The General Electric F-101-DFE engine is recommended because it yields the smallest vehicle. Whether this engine goes into production will affect future VHLH design work choices.

CONCLUSIONS AND RECOMMENDATIONS

This preliminary design study satisfies the design contract requirement by integrating HHI's tip jet rotor preliminary design computer program with DTNSRDC's circulation control data. Based on the output of this combined program and considering the findings of a limited sensitivity analysis, a VHLH configuration was defined for the Marine Corps mission of airlifting the XM-1 Main Battle Tank or a variety of other heavy cargo items over the beach from ship to shore. Such a vehicle, although much larger than any existing helicopter, is a practical application of available technology. All the required materials, engines, and design and manufacturing techniques are currently available — no new features need be invented. While this helicopter is huge by modern comparisons, it is shown to be significantly smaller than an equivalent shaft-drive helicopter would be.

Recommendations for additional work leading to an orderly development program for the VHLH include the following sequence of steps:

- Conduct an operational and benefits analysis of the VHLH relative to other heavy lift concepts such as multi-lift; aerostats; and shaft-driven helicopters, both single and multi-rotor.

- Conduct a preliminary design study of the selected VHLH configuration. The study would include work items such as:

  - Refine the warm cycle/circulation control computer program and conduct a rotor/engine preliminary design study.

  - Evaluate engine control techniques for multiple engines feeding a common plenum.

  - Design, fabricate, test, and evaluate a representative section of an insulated main rotor blade to verify the efficiency of LOW-Q™ metallic insulation in this warm cycle blade application.

  - Evaluate fly-by-wire and fly-by-light control systems incorporating higher harmonic control.

- Evaluate the circulation control system's airflow modulating valve.
- Design, fabricate, and test a pneumatically driven and controlled wind tunnel model of the main rotor system.
- Evaluate airframe and rotor manufacturing techniques.
- Evaluate cargo lift systems and operating techniques.
- Construct a full-scale mockup.

- Perform detail design of VHLH main rotor and propulsion/control systems.
- Fabricate a main rotor/propulsion/control system for a whirltower test.
- Conduct a whirltower test.
- Perform detail design of airframe and landing gear.
- Fabricate flight test aircraft.
- Conduct flight evaluation.

A joint DTNSRDC/NASA research effort to demonstrate the warm cycle/circulation control rotor on NASA's Rotor System Research Aircraft (RSRA) is suggested as an interim program for an alternate approach to the final VHLH vehicle.

REFERENCES

1. Carter, E. S., Cooper, D. E., and Knapp, L G., "Single Rotor Options for Heavy Lift and Potential of Multi Lift," Paper 791087, Aerospace Meeting of the Society of Automotive Engineers, December 1979.

2. Sullivan, R. J., and Harned, M. S., "Performance of Advanced Heavy Lift Helicopters with Hot Cycle Propulsion," presented at the 22nd Annual National Forum of the American Helicopter Society, May 1966.

3. Smith, C. R., "Design and Test of the Hot Cycle Rotor System," ASME Publication 65-AV-46, American Society of Mechanical Engineers, March 1965.

4. Yen, J. G., "Vibration Reduction with Higher Harmonic Blade Feathering for Helicopters with Two-Bladed Teetering and Four-Bladed Hingeless Rotors," Preprint 80-69, 36th Annual National Forum of the American Helicopter Society, May 1980.

5. MIL-H-8501A, "Helicopter Flying and Ground Handling Quality, General Requirements for," September 1961.

6. Ward, E. R., Powers, R. W., and Hammond, C. E., "On Methods for Application for Harmonic Control," Paper 22, Proceedings of the Fourth European Rotorcraft and Powered-Lift Aircraft Forum, Stresa, Italy, September 1978.

BIBLIOGRAPHY

Abramson, Jane, "Two-Dimensional Subsonic Wind Tunnel Evaluation of Two Related Cambered 15-Percent-Thick Circulation Control Airfoils," DTNSRDC ASED-373, David W. Taylor Naval Ship Research and Development Center, Bethesda Maryland, September 1977.

Powers, R. W., "Preliminary Design Study of a Higher Harmonic Blade Feathering Control System," NASA-CR-159327, NASA Langley Research Center, Virginia, June 1980.

Sullivan, R.J., La Forge, S.V., and Holchin, B.W., "A Performance Application Study of a Jet-Flap Helicopter Rotor," NASA-CR-112030, NASA Langley Research Center, Virginia, May 1972.

Wilkerson, J. B., "An Analytical Study of the Mechanical Stability of Two-Bladed Rigid Rotor Systems, "Report 3551, Naval Ship Research and Development Center, Washington, D. C., January 1970.

Wilkerson, J. B., Reader, K. R., and Linck, D. W., "The Application of Circulation Control Aerodynamics to a Helicopter Rotor Model," Preprint 73-704, 29th Annual National Forum of the American Helicopter Society, May 1973.

Wilkerson, J. B., "An Assessment of Circulation Control Airfoil Development," 77-0084, David W. Taylor Naval Ship Research and Development Center, Bethesda, Maryland, August 1977.

Wilkerson, J. B., Barnes, D. R., and Bill, F. A., "The Circulation Control Rotor Flight Demonstrator Program, "Preprint 79-51, 35th Annual National Forum of the American Helicopter Society, May 1979.

Wilkerson, J. B., "Design and Performance Analysis of a Prototype Circulation Control Helicopter Rotor," AL-290, David W. Taylor Naval Ship Research and Development Center, Bethesda, Maryland, March 1973.

Wilkerson, J. B., and Linck, D. W., "A Model Rotor Performance Validation for the CCR Technology Demonstrator," Preprint 75-902, 31st Annual National Forum of the American Helicopter Society, May 1975.

PRECEDING PAGE BLANK-NOT FILMED

DTNSRDC ISSUES THREE TYPES OF REPORTS

1. DTNSRDC REPORTS, A FORMAL SERIES, CONTAIN INFORMATION OF PERMANENT TECHNICAL VALUE. THEY CARRY A CONSECUTIVE NUMERICAL IDENTIFICATION REGARDLESS OF THEIR CLASSIFICATION OR THE ORIGINATING DEPARTMENT.

2. DEPARTMENTAL REPORTS, A SEMIFORMAL SERIES, CONTAIN INFORMATION OF A PRELIMINARY, TEMPORARY, OR PROPRIETARY NATURE OR OF LIMITED INTEREST OR SIGNIFICANCE. THEY CARRY A DEPARTMENTAL ALPHANUMERICAL IDENTIFICATION.

3. TECHNICAL MEMORANDA, AN INFORMAL SERIES, CONTAIN TECHNICAL DOCUMENTATION OF LIMITED USE AND INTEREST. THEY ARE PRIMARILY WORKING PAPERS INTENDED FOR INTERNAL USE. THEY CARRY AN IDENTIFYING NUMBER WHICH INDICATES THEIR TYPE AND THE NUMERICAL CODE OF THE ORIGINATING DEPARTMENT. ANY DISTRIBUTION OUTSIDE DTNSRDC MUST BE APPROVED BY THE HEAD OF THE ORIGINATING DEPARTMENT ON A CASE-BY-CASE BASIS.