N O T I C E

THIS DOCUMENT HAS BEEN REPRODUCED FROM MICROFICHE. ALTHOUGH IT IS RECOGNIZED THAT CERTAIN PORTIONS ARE ILLEGIBLE, IT IS BEING RELEASED IN THE INTEREST OF MAKING AVAILABLE AS MUCH INFORMATION AS POSSIBLE

Final Report

NASA Contract NSG-2350 - December 1978 to November 1980

To Develop Behavioral Tests of Vestibular Functioning in the Wistar Rat

(NASA-CR-164537) TO DEVELOP BEHAVIORAL TESTS OF VESTIBULAR FUNCTIONING IN THE WISTAR RAT Final Report, Dec. 1978 - Nov. 1980 (Utah Univ.) 26 p HC A03/MF A01 CSCL 06C G3/51 N81-27778 Unclas 26777

Submitted by:

Dr. Harold C. Nielson
Department of Psychology
University of Utah
Salt Lake City, Utah 84112

Phone: (801) 581-8889

NASA Technical Officer:

Dr. Joseph C. Sharp
NASA, Ames Research Center
Moffett Field, CA 94305

JUL 1981
RECEIVED
NASA STI FACILITY
ACCESS DEPT.

Table of Contents

	Page
Introduction 1	1
Introduction 2	2
The Water Maze Test	4
Experiment I	5
Experiment II	7
Experiment III	9
Experiment IV	12
General Discussion	15
The Parallel Swing	16
References	22

List of Illustrations

Figure 1.	The water maze	4
Figure 2.	Swim times following s.c. injections	6
Figure 3.	Time under water following intratympanic injections	8
Figure 4.	Errors in the water maze	10
Figure 5.	Swim times following intratympanic injections	10
Figure 6.	Underwater swim times	11
Figure 7.	The parallel swing	16
Figure 8.	Pressure changes on the parallel swing	18
Figure 9.	Pressure changes following intra-tympanic injections	19

* * *

Table 1.	Performance after visual compensation	14

Introduction

Under the terms of this contract we proposed to develop two tests of vestibular functioning in the rat. The first test we developed was the water maze. In the water maze the rat does not have the normal proprioceptive feedback from its limbs to help it maintain its orientation, and must rely primarily on the sensory input from its visual and vestibular systems. By altering lighting conditions and visual cues we were able to assess vestibular functioning without visual cues, and determine whether there was visual compensation for some vestibular dysfunction.

The second test that we proposed to develop to measure vestibular functioning was the rat's behavior on a parallel swing. In this test we attempted to assess the rat's postural adjustments while swinging on the swing and the otoliths were being stimulated. We were less successful in developing the parallel swing as a test of vestibular functioning than we were with the water maze. The major problem was our incorrect initial assumptions of what the rat's probable behavior on the parallel swing would be.

In the report that follows we present the results of the water maze first. The section on the parallel swing describes the subjects, apparatus and procedure, the problems that we have encountered with the rat as an experimental subject, and the results that we have obtained to date.

General Introduction

In primitive animals the vestibular system evolved to provide information about body orientation. Then, as higher animal forms evolved and the head became detached from the body and was connected to it by a neck, the vestibular system provided information about the orientation of the head. Information about the orientation of the head then resulted from the convergence of sensory information from neck muscles, the visual and proprioceptive systems with the vestibular system. The neck and vestibular systems appear to cooperate to provide a stable visual image while equilibrium, or maintenance of balance appears to be an integration of all these systems with the motor system (Howard & Templeton, 1968). Higher organisms use input from all of these systems to orient themselves in space (Parker, 1980), with most being able to tolerate the removal of one of these sensory modalities and still maintain adequate orientation as long as they are not stressed or required to perform complex tasks (Hawkins & Preston, 1975). The ability to maintain body orientation with one of these systems absent was seen in the early clinical studies with streptomycin, an ototoxic antibiotic (Glorig & Fowler, 1947; Northington, 1950). Patients receiving large daily doses of streptomycin initially reported problems of equilibrium and difficulty in focusing their eyes on objects, with the objects under visual focus appearing to jump. The problems with equilibrium subsided within a few weeks only to reappear when the patients were in the dark. The cause of the problem was subsequently identified as vestibular in origin.

The reasons for not observing these difficulties in the rats and mice, upon which streptomycin was first tested, is not apparent. Molitor, Graessle, Kuna, Mushett, and Silber (1946) stated that the only animal that shows the toxic effect of streptomycin, comparable to the effect seen in man, is the dog. They specifically excluded the frog, mouse, rat, and guinea pig as being susceptible to streptomycin. A number of ototoxic drugs have now been identified and many are routinely administered to research animals on a daily basis. A behavioral test of vestibular functioning, particularly the otoliths, would be useful for drug screening, as well as for behavioral evaluations of sensory integration. Such a test would be useful, particularly for the rat which is a widely used research animal that frequently receives ototoxic drugs on a daily basis.

The drugs that have been reported to be toxic to the inner ear structures including the vestibular apparatus include the aminoglycosidic antibiotics and arsenical compounds. Among those drugs that appear to be more toxic to the vestibular apparatus than to the cochlea are streptomycin (Duvall & Wersall, 1964), neomycin (Hawkins & Lurie, 1953), viomycin (Kanda & Igarashi, 1969), and sodium arsanilate (atoxyl) (Anniko & Wersall, 1977). These drugs appear to damage mainly the peripheral vestibular end organ, particularly the secretory epithelium of the crista, macula, and the types I and II sensory hair cells. Specifically, Lindquist (1973), and Hawkins and Preston (1975) have suggested that destruction of the marginal secretory cells of the crista and macula,

that are associated with melanin containing melanocytes, leads to a disruption of the osmolarity of the system and that leads to a secondary destruction of types I and II hair cells. Many species, contrary to the report of Molitor et al. (1946), are reported to be sensitive to these ototoxic drugs besides man and dog. These species include monkey, cat, guinea pigs, pigeons, and mice (Hawkins & Preston, 1975; Anniko & Wersall, 1977; Causse, Gendet, & Vallancian, 1948). Rats are not frequently used in investigations of vestibular functions and appear to be refractory to the systemic action of streptomycin (Riccio, Igarashi, & Eskin, 1967). The supposed refractoriness of rats to these drugs may be due to a highly resilient vestibular system, it may be due to an efficient excretory system that quickly excretes these drugs, or it may be due to the lack of a sensitive behavioral measure to assess vestibular dysfunction.

Typical tests to assess vestibular integrity in species other than rats, include changes in the interaction of the hand and eyes in lateral gaze shifts (Dichgans, Bizzi, Morasso, & Tagliasco, 1973), loss of post rotational nystagmus (Jongkes & Hulk, 1950), increase in incidence of ataxia (Hawkins et al., 1969), loss or delay of righting reflex (Watt, 1976), balance on a rotating rail (Igarashi, 1968), spontaneous activity levels during lateral rotation (Riccio et al., 1967), and morphological examination of the labyrinth (Anniko & Wersall, 1975). There have been a few reports of swimming being used to assess vestibular integrity. These include swimming by infant monkeys following streptomycin intoxication or exposure to manganese deficient diets (Riolpella & Hubbard, 1979), by toads following labyrinthectomies (Gray & Lissman, 1947), by rats following unilateral or bilateral labyrinthectomies (T'ang & Wu, 1936; 1937), by tadpoles following labyrinthectomies and blinding (Horn & Rayer, 1978), and by mice following streptomycin injections (Causse et al., 1948). These swimming tests appear to have only determined the organisms ability to find or remain on the surface of the water without engaging in other goal directed behavior. Since orientation of the head results from the integration of sensory input from neck muscles, and proprioceptive, visual and vestibular systems with the motor system, it would appear that restriction or elimination of sensory input from some of these sensory systems may offer a behavioral means of evaluating the integration of the systems involved in orientation. For this reason, swimming behavior holds promise as a sensitive index of the degree of vestibular disruption. With the rat swimming or floating in the water, the effectiveness of proprioceptive cues will be reduced and increase the animal's reliance upon vestibular and visual stimulation for its orientation. Visual and vestibular sensory input can be altered, vestibular input by administering ototoxic drugs, and visual input by changing locations of light sources or by eliminating light altogether; it should then be possible to evaluate the contributions of each of these sensory systems to the rat's orientation in a swimming task. In addition, small degrees of vestibular dysfunction that are not normally detected by other swimming tests may be identified.

The Water Maze Test

Vestibular dysfunction was induced in Long-Evans and Wistar rats--previously thought to be refractory to the effects of ototoxic drugs--by subcutaneous or intratympanic injections of sodium arsanilate (atoxyl). Three measures of swimming behavior were taken to assess the degree of vestibular dysfunction. These measures were: escape latencies, errors, and underwater swimming times. Subcutaneous injections of sodium arsanilate that resulted in no behavioral impairment of previously trained rats resulted in less efficient learning of the maze my naive rats. Visual compensation for vestibular impairment was detected by altering or removing the visual cues the rats used in their compensation. A strain difference in sensitivity to subcutaneous injections of sodium arsanilate was found between the Wistar and Long-Evans rats with the Wistar rats much more sensitive.

General Method

Apparatus. The configuration of the water maze used in these experiments is shown in Figure 1. It was constructed of clear glass with sides 1 m x 60 cm x .7 cm. The alleys were located at the corners of the maze at a 45° angle to the side of the maze and were 35 cm long and 12.5 cm wide. Edges were reinforced with 1.8 cm angle iron that was painted flat black. Heavy black drapes covered the bottom of the maze and the left side of the starting alley. Illumination was provided by a 4 watt light suspended 1 m above the center of the maze.

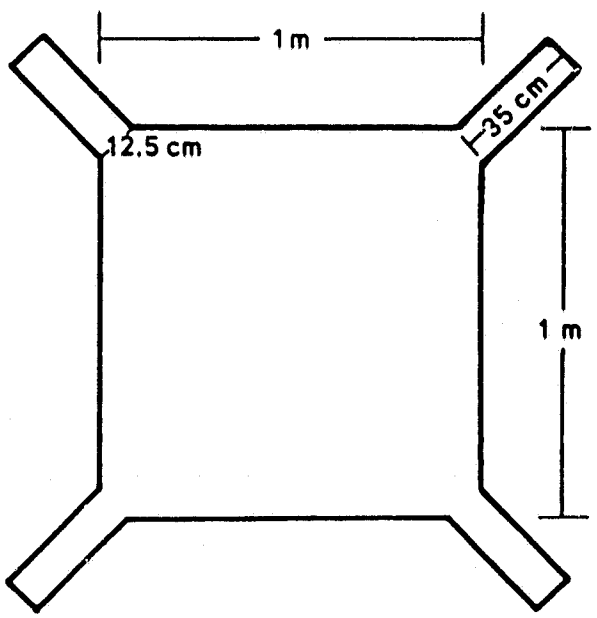

Figure 1. Configuration of the water maze. The water maze has sides that are 1 m long, 60 cm high, and .7 cm thick. It is made of clear glass. The arms at the corners of the maze are 35 cm long, 60 cm high, and .6 cm thick. The width of the arms is 12.5 cm.

Procedure. All rats were housed individually and maintained with ad lib access to food and water throughout the experiments. Five daily training trials were given for seven days for the rats to learn to swim directly from the starting alley to the escape ladder, located in the diagonally opposite alley. The positions of the starting alley and the escape ladder were kept constant throughout the course of the experiments. Water in the maze was 38 cm deep and was kept at 13° C to facilitate optimum escape conditions (Pusakulich & Nielson, 1975). Between trials the rats were placed in a square metal tub heated with a red heating lamp. Four items were recorded on each trial: the latencies to swim from the start alley to the escape ladder, total underwater swimming time, errors when the rat entered an alley other than the one with the escape ladder, and the approximate path. Percentage of underwater time for each trial was computed by dividing the amount of time underwater for the trial by the total amount of time taken to swim the maze in that trial.

Swimming times in seconds were converted to $\log_{10}$, and errors and percentage of time underwater were converted into $\log_{10}(x + 1)$ to reduce correlations between the means and variances.

Experiment I

Subcutaneous injections of sodium arsanilate (atoxyl) have been reported to be toxic to the vestibular system in species such as guinea pigs (Anniko & Wersall, 1975; 1976; 1977), however, little research has been attempted utilizing rats. The purpose of this first experiment was to determine the effects of subcutaneous injections of sodium arsanilate on the swimming behavior of two strains of rats, Wistars and Long-Evans.

Method

Subjects. Subjects were six male Long-Evans (Blue-Spruce Farms), and 12 male Wistar (six from Blue-Spruce, six from the Psychology Department colony) rats that weighed between 330 and 375 grams at the beginning of the experiment.

Procedure. After the seven daily training sessions, performances were stable. Six hours prior to the eighth session all rats received their first 40 mg/kg (20 mg/ml, saline vehicle) subcutaneous injection of sodium arsanilate (Pro Gen W, Abbott Lab.). Two additional injections of sodium arsanilate (40 mg/kg, s.c.) preceded the ninth and tenth sessions after which injections for the Wistar rats were discontinued because their escape responses were disrupted. When this occurred, only 2 daily trials were given with a five minute rest period between trials. The six Long-Evans rats continued to receive daily injections of sodium arsanilate (40 mg/kg, s.c.) for seven days until the dose was increased to 60 mg/kg (s.c.) for an additional 10 days, followed by three days of 80 mg/kg (s.c.). Sodium arsanilate injections were discontinued but testing in the water maze continued for 36 days for the 12 Wistar rats and 16 days for the six Long-Evans rats.

Results

Two-way analysis of variance with repeated measures indicated that all three measures: swim times [$F(2, 15) = 6.512$, $p < .01$], errors [$F(2, 15) = 7.267$, $p < .01$], and underwater time [$F(2, 15) = 6.672$, $p < .01$] were different for strain of animal. Additionally, effects across days were found for swim

times [F(39, 520) = 6.82, $p < .001$], errors [F(39, 520) = 5.29, $p < .001$], and underwater time [F(39, 520) = 6.83, $p < .001$]. Sodium arsanilate disrupted the swimming behavior of both Wistar and Long-Evans rats. However, not only were the individual daily doses to dysfunction different, but their total cumulative doses were greatly different (120 mg/kg for the Wistars compared to 1,400 mg/kg for the Long-Evans). In addition, the Long-Evans rats recovered from or compensated for the dysfunction while the Wistars never did completely recover. The swim times for the two groups are shown in Figure 2.

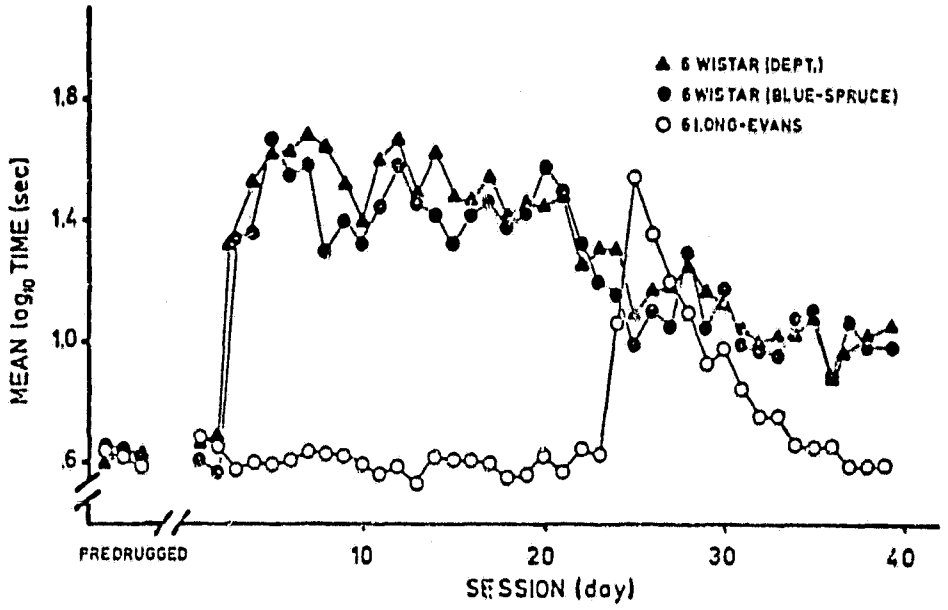

Figure 2. The mean $\log_{10}$ swimming times (sec) in the water maze. The twelve Wistar (solid circles-Blue Spruce, and solid triangles-Psychology Department) rats received daily doses of 40 mg/kg of sodium arsanilate for Days 1-3 and nothing thereafter. The six Long-Evans (open circles) rats received daily doses of 40 mg/kg sodium arsanilate for Days 1-10, 60 mg/kg for Days 11-20, 80 mg/kg for Days 21-23, and nothing thereafter.

Discussion

It seems unlikely that vendor differences can account for the effects reported here. The Wistars were obtained from two different sources, and one of those also supplied the Long-Evans rats. Other factors that might explain the difference can be suggested but the present data do not allow choices among them. One possible explanation of the strain difference is that the kidneys do not excrete the sodium arsanilate well in the Wistar stock, leading to higher drug levels or more longer retention of it. Anniko and Ljungqvist (1977) demonstrated that sodium arsanilate damages the secretory cells of the renal tabules. Another possibility may be that the vestibular tissue is more sensitive to the drug in the Wistars. Or perhaps, the albino Wistar rats are less able to visually compensate for the failing vestibular system, although this last speculation becomes strained when the abruptness of difficulty in swimming the maze, manifested by both strains, is considered.

Experiment II

In order to produce graded vestibular dysfunction and to minimize side effects produced by large systemic doses of sodium arsanilate, a procedure similar to the one developed by Riccio et al. (1967) was used. A solution of sodium arsanilate was injected directly into the middle ear cavity through the tympanic membrane. In this way, the amount of the ototoxic drug could be varied to induce immediate graded levels of vestibular dysfunction, and eliminate the side effects of long-term systemic injections.

Method

Subjects. The subjects were 18 male Long-Evans and 12 male Wistar rats, weighing between 350-400 grams at the onset of the experiment.

Procedures. After the initial seven daily training sessions in the water maze, the 30 rats were divided into six groups of five rats, each with three Long-Evans and two Wistar rats, and anesthetized with sodium pentobarbital (40 mg/kg, i.p.). The five rats in the control group received an injection of .14 ml normal saline into each middle ear cavity. The experimental rats received the same volume of injections. The rats that received the 1, 2.5, and 5 mg/kg sodium arsanilate received it in a normal saline vehicle (20 mg/ml), while those that received 10 or 20 mg/kg sodium arsanilate received it in a dose utilizing 100 mg/ml concentration of sodium arsanilate in normal saline. After each injection, the external auditory meatuses were packed with Gelfoam (Upjohn Co.). After the intratympanic injections, rats were returned to their home cages to recover from anesthesia. Testing in the water maze began the following day. Test sessions were reduced to two trials each test day with 15 minutes between trials to minimize fatigue within each session. All rats were tested on days 1, 2, 6, 9, 13, 16, 25, 35, and 45 following the intratympanic injections.

Results

No strain differences were found. Comparison of the performance measures between the Wistar and Long-Evans rats within each treatment group revealed no differences in sensitivity to sodium arsanilate through middle ear injections.

The day following the intratympanic injections, all groups except the saline group had an increase of swimming times, errors, and percentage of time underwater. Performance measures are summarized in Figure 3. Swimming times of all groups except the control, were increased within 24 hours, and all but the groups receiving the lower doses remained elevated thereafter. A two-way analysis of variance with repeated measures revealed an effect due to the dose of drug, F (5, 54) = 101.776, $p < .001$; to changes across days, F (5, 54) = 6.849, $p < .001$; and a dose across day interaction, F (40, 432) = 1.59, $p < .01$. Simple main effects due to the doses of sodium arsanilate were all reliably different at the $p < .001$ level for all nine test days, F (5, 200) = 27.556, 34.503, 30.310, 27.008, 31.513, 31.300, 37.480, 30.036. Similarly reliable effects were found for both of the other measures, errors, and percentage of swimming time underwater.

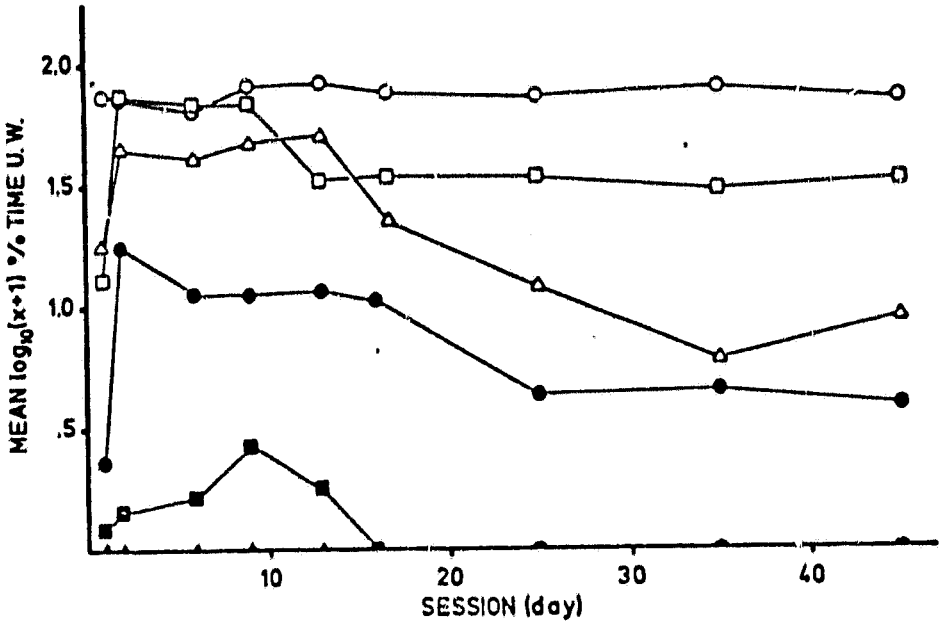

Figure 3. A comparison of the mean $\log_{10}(x + 1)$ percentage of time underwater for 30 trained rats over a 45-day test period following bilateral intratympanic injections of sodium arsanilate. Rats received saline injections (solid triangles), 1 mg/kg (solid squares), 2.5 mg/kg (solid circles), 5 mg/kg (open triangles), 10 mg/kg (open squares), or 20 mg/kg (open circles).

Graded vestibular dysfunction was induced in rats by varying the dosage and concentration of sodium arsanilate injected into the middle ear cavity. Temporary damage or damage that was quickly compensated for, was induced with 1 mg/kg intratympanic injections with recovery in 16 days. More severe damage and a longer compensatory period was produced by the 2.5 mg/kg dose and required the longer time of 25 days for recovery. Both 5 and 10 mg/kg injections produced long-lasting swimming deficits that showed only slight recovery during the 45-day test period. The greatest and apparently permanent deficits followed the 20 mg/kg injections. Severe disorientation and an inability to find and remain on the surface of the water was common in this group. The 20 mg/kg dose appeared to mimic the effects of bilateral labyrinthectomies (T'ang & Wu, 1937; Gray & Lissmann, 1947; Igarashi, Watanabe, & Maxian, 1970) and there was no recovery.

Discussion

The injection of physiological saline into the middle ear in volumes closely approximating those of the treatment groups, did not affect the escape behavior of the control group. Hence, it appears that the sodium arsanilate was responsible for inducing the swimming deficits, probably by inducing vestibular damage.

An advantage of the intratympanic injection method is that it induces

vestibular dysfunction with only one injection and at low doses. The fact that the intratympanic injections produced the same effect at the same dose, regardless of strain, strongly suggests that the strain difference found in the first experiment was not due to differential sensitivity of the vestibular apparatus of the two strains. Rather, it seems more likely that the strain differences found in the first experiment result from systemic effects resulting from differential renal clearance times of sodium arsanilate between the Wistar and Long-Evans rats, especially since kidney damage has been reported from systemically administered sodium arsanilate (Anniko & Ljungqvist, 1977).

Experiment III

Experience in the water maze may affect the degree to which vestibular dysfunction is manifested because there may be some visual compensation. This possibility was investigated.

Method

Subjects and Procedure. Eight male Wistar rats that weighed between 400 and 450 grams were divided into two groups of four. The experimental group received two subcutaneous injections of sodium arsanilate (40 mg/kg) spaced 24 hours apart. The four rats in the control group received comparable volumes of normal saline (s.c.) at the same times as the experimental group.

The day following the second injection, both groups received their first session in the water maze and testing continued for five consecutive days. Each rat received five trials each day in the water maze.

Results

The experimental group, treated with sodium arsanilate had increased swimming times, errors, and percentages of time underwater when compared to the control group. Repeated measures two-way analyses of variance revealed an effect due to drug administration for all three measures: swimming times, F (1, 6) = 22.89, $p < .01$; errors, F (1, 6) = 101.4, $p < .01$; and percentage of time underwater, F (1, 6) = 27.887, $p < .01$. Figures 4, 5, and 6 illustrate the swimming times, errors, and percentage of time underwater, respectively. Significant changes occurred across days for the swimming times, F (5, 30) = 25.52, $p < .01$; and errors, F (5, 30) = 22.333, $p < .01$; but not percentage of time underwater. Analysis of simple main effects for individual sessions between groups for swimming times showed that the differences between the control group and the injection group were found on the first three sessions, F (1, 30) = 22.613, 38.647, 12.475, $p < .01$. Errors were also different for the first three sessions, F (1, 30) = 35.59, 60.692, 21.35, $p < .01$. The percentage of time spent underwater were different between the two groups for: session one, F (1, 30) = 19.761, $p < .01$; session two, F (1, 30) = 6.279, $p < .05$; session five, F (1, 30) = 14.762, $p < .01$; and session six, F (1, 30) = 9.465, $p < .01$.

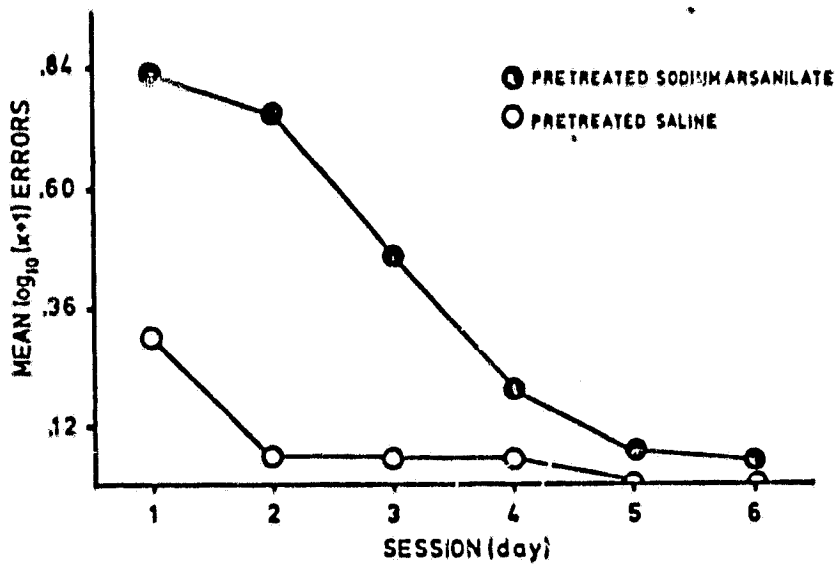

Figure 4. A comparison of the mean $\log_{10}(x + 1)$ errors, during the first six sessions of training in the water maze by four saline injected (s.c.) Wistar rats (open circles), and four Wistar rats (solid circles) pretreated with two injections of sodium arsanilate (40 mg/kg; s.c.).

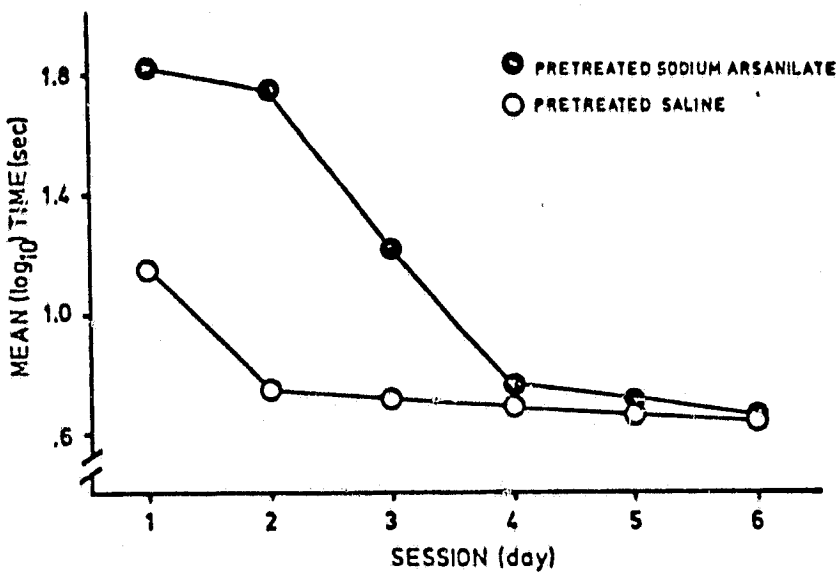

Figure 5. A comparison of mean $\log_{10}$ swim times (sec) during the first six sessions of training in the water maze by four saline injected (s.c.) Wistar rats (open circles), and four Wistar rats (solid circles) pretreated with two injections of sodium arsanilate (40 mg/kg, s.c.).

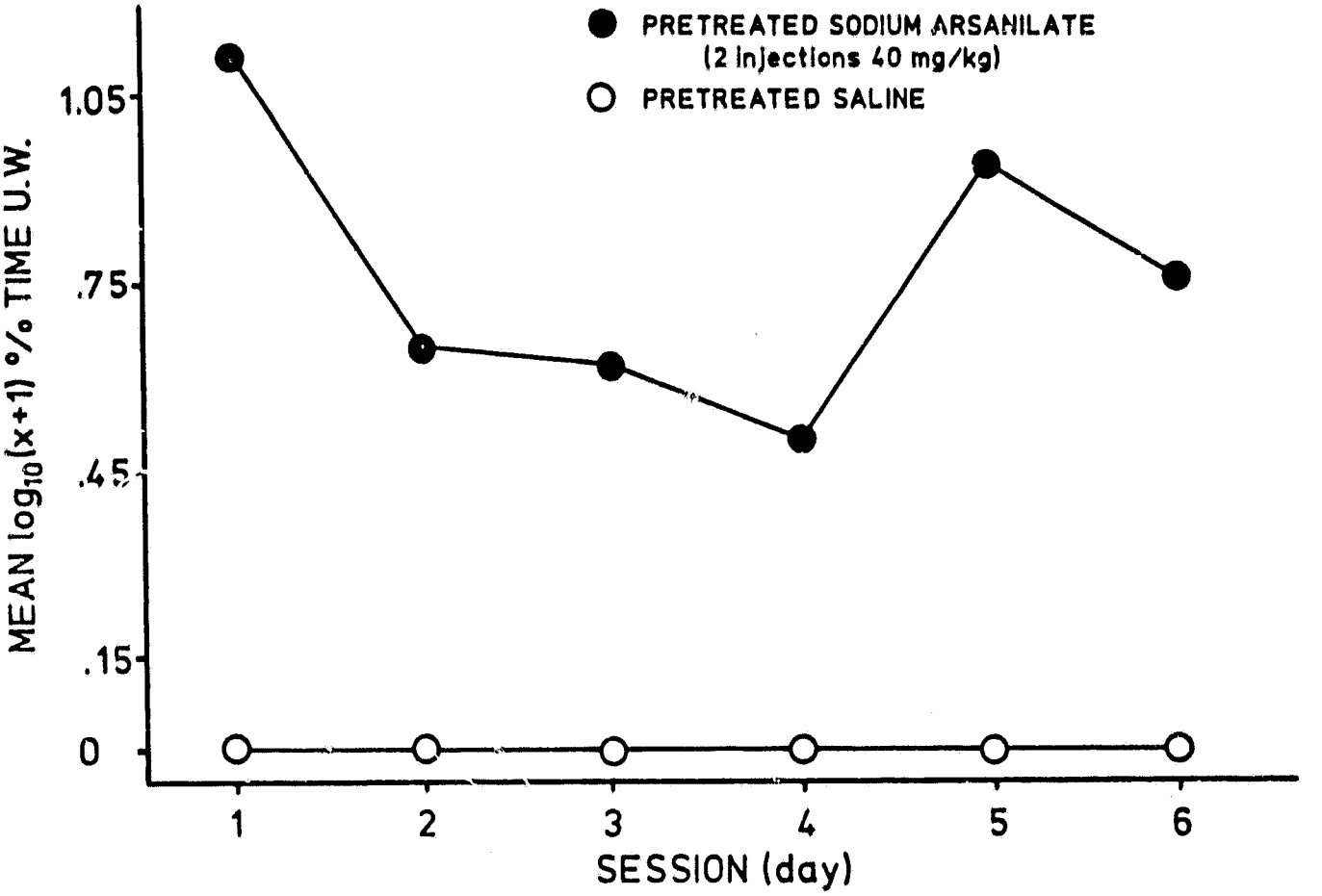

Figure 6. A comparison of the mean $\log_{10}$ (x + 1) percentage of time spent underwater, during the first six sessions of training in the water maze by four saline injected (s.c.) Wistar rats (open circles), and four Wistar rats (solid circles) pretreated with two injections of sodium arsanilate (40 mg/kg; s.c.).

Discussion

While we cannot rule out the possibility that these results reflect a generalized illness produced by the sodium arsanilate, there was no evidence that the rats were distressed. There were no drops in body weight to suggest that food had not been eaten. Furthermore, after 4 days, the latencies of the two groups were not different, what was different was the swimming styles of the two groups. Throughout all six sessions the experimental rats continued to swim parts of the maze submerged, perhaps reflecting a difference in how the two groups learned to escape from the water. Finally, the rats in the first experiment that also received two subcutaneous injections of 40 mg/kg sodium arsanilate did not have slower swimming latencies until after the third injections. For these reasons then, no disruption of eating, no changes in swimming latencies in experienced swimmers, and different swimming style with

more underwater swimming, we believe these results reflect swimming experience and vestibular functioning rather than a generalized illness.

Experiment IV

Clinical studies (Glorig & Fowler, 1947; Fregly & Graybiel, 1970) have demonstrated that persons with bilateral vestibular dysfunction are normally able to maintain their equilibrium as long as their vision is not occluded. However, once visual cues are removed, they typically are unable to maintain their balance. This was originally demonstrated with persons receiving streptomycin treatments (Glorig & Fowler, 1947; Northington, 1950) for tuberculosis. Hawkins and Preston (1975) indicated that compensation was achieved through increased reliance upon visual and proprioceptive cues, and that walking in the dark presented special difficulties even after other equilibrium problems had subsided.

Experiment II indicated that rats with smaller doses of sodium arsanilate (1 mg/kg and 2.5 mg/kg) recover swimming efficiency. This may indicate either a recovery of vestibular function or visual compensation for any vestibular impairment that remained. If visual compensation occurred, it would be likely that the rats would come to show a greater reliance upon visual cues to help maintain a dynamic equilibrium in the water. In this experiment we investigated the effects of visual stimuli by introducing visual cues that were incongruous with the cues the rats had previously encountered in the maze or by eliminating visual cues by having the rats swim in the dark.

Method

Subjects. Eight rats, five Long-Evans, and three Wistar, from Experiment II that had regained their water maze performance following injections of sodium arsanilate served as experimental subjects. Eight additional rats, five Long-Evans, and three Wistar, served as controls.

Apparatus. The water maze was again utilized in the same physical conformation as in the previous experiments. Light conditions were varied by placing the four-watt partially shielded light at two positions other than directly overhead. The light was placed one meter below the bottom of the maze with the black drapes over the top of the maze and the right side of the start alley, or the light was placed one meter from the center of a side of the maze adjacent to the start alley, and the top and right side of the start alley were draped. The rats were also tested under dim red illumination.

Procedures. The experimental group was selected from among those rats used in Experiment II that had recovered swimming performance. The criteria for selection were: (a) no errors made in the last three sessions; (b) no underwater swimming occurred in the three previous sessions; and (c) each rat had an average swimming time of less than 10 seconds for the three previous sessions. Five rats from the 1 mg/kg group and three rats from the 2.5 mg/kg group were selected for this study.

A control group composed of the same ratio of Wistar to Long-Evans rats were selected and received the same number of total trials in the water maze.

All rats were then tested under three conditions of altered lighting: (a) total darkness; (b) light source from beneath the maze; and (c) light source from the side of the maze. Order of presentation of the three conditions was randomized. Rats received two trials in each condition and only one lighting condition per day with the other two conditions being presented on successive days.

Results

The alterations of lighting affected the "recovered" rats more than the controls. The mean swimming times, errors, and percentage of time underwater are presented in Table 1 (below).

Repeated measures two-way analyses of variance indicated that the two groups differed in their swimming times, F (1, 30) = 19.909, $p < .01$; errors, F (1, 30) = 13.182, $p < .01$; and percentage of underwater time, F (1, 30) = 6.665, $p < .01$. Analysis of simple main effects indicated that the experimental group differed from the control group in the swimming times for the bottom illumination, F (1, 120) = 12.235, $p < .01$; and the dark condition, F (1, 120) = 24.837, $p < .01$. Simple main effects for errors between the two groups in the four conditions indicated differences for bottom lighting, F (1, 120) = 10.194, $p < .01$, and for the dark, F (1, 120) = 16.373, $p < .01$. All three variations of lighting showed effects for percentage of time underwater: side, F (1, 120) = 8.517, $p < .01$; bottom, F (1, 120) = 6.150, $p < .05$; and dark, F (1, 120) = 7.54, $p < .01$. There were no significant differences between the experimental and control groups in the initial overhead illumination condition, due to the selection factors for inclusion in the study.

Discussion

Vestibular dysfunction can be visually compensated for and is not observed except under altered lighting conditions. It appears that the rats that had apparently recovered vestibular functions had visually compensated for the sodium arsanilate induced vestibular dysfunction. When visual cues were altered or absent, the swimming of the maze became erratic compared to normal animals exposed to the same conditions and to their own swimming performance before lighting conditions were altered. This readily corresponds to observations on human beings, with marginal vestibular dysfunction, who have difficulty in maintaining adequate orientation in the dark (Glorig & Fowler, 1947; Brown & Hinshaw, 1949).

The most sensitive measurement of vestibular dysfunction appears to be the percentage of time spent underwater in that the control and experimental groups differed between all three lighting conditions. Both dark and bottom lighting conditions appear to be sensitive indexes of marginal vestibular dysfunction because they reliably differentiated the swimming behavior of the two groups on all three measures: swim times, errors, and percentage of underwater time.

Table 1

Mean Performance on Three Measures for Normal and Compensated Rats Under Altered Lighting Conditions

	Measures					
	Swim Time Log_{10} (sec)		Errors Log_{10} (x + 1)		% Underwater Log_{10}	
Lighting	Normal	Compensated	Normal	Compensated	Normal	Compensated
Above (Normal)	.6952	.7650	0	0	0	0
Side	.7685	.9077	.0188	.1250	0	.6789**
Bottom	.7950	1.0795**	.0564	.2975*	0	.6779*
Dark	.8141	1.2250**	.0674	.3749*	0	.6585**

*Significant (F) simple main effects at $p < .05$

**Significant (F) simple main effects at $p < .01$

General Discussion

Results from all four experiments confirm that sodium arsanilate (atoxyl) is ototoxic to rats, as it is to guinea pigs (Anniko & Wersall, 1975; 1976; 1977).

The underlying assumption of these experiments is that the sodium arsanilate injections are inducing vestibular damage even though we have not attempted to identify that damage by histological means. This assumption is supported by the work of Riccio et al. (1976) who produced histologically identified damage by intratympanic injections of streptomycin, and Anniko and Wersall (1975) who produced histologically identified damage by subcutaneous injections of sodium arsanilate. Furthermore, the contention that these behavioral deficits are due to vestibular dysfunction is supported by the fact that saline-injected rats do not show these deficits--either by subcutaneous or intratympanic injections.

Escape from the water maze was found to be a sensitive index of vestibular functioning. It was especially sensitive when vestibular damage was produced before the animal learned to escape from the water maze. The rats in Experiment III were impaired in acquiring the escape response by a dose of sodium arsanilate that had produced no discernable vestibular dysfunction in rats in Experiment I that had received two injections after learning the escape response. Furthermore, the rats that received two 40 mg/kg doses of sodium arsanilate before acquiring the escape response differed qualitatively from rats without any dysfunction in that they swam more of the maze submerged. For these reasons, testing for vestibular dysfunction before swimming experience would appear to be a sensitive measure of vestibular dysfunction, with the most sensitive index being the percentage of time spent underwater. Normal animals seldom swam under the surface of the water while rats that had marginal dysfunction had significant periods of underwater swimming throughout most of the sessions.

Altered lighting also was a sensitive test of vestibular dysfunction, with the best being light coming from the bottom of the maze or by having the rats swim in dim red light. It appears that rats increase their reliance on visual cues following damage to the vestibular system and by removing or giving contradictory visual cues, it was possible to reveal vestibular deficits that were previously concealed.

An unexpected finding was that sodium arsanilate has a differential effect upon two different strains of rats. Lindquist (1973) and Hawkins and Preston (1975) speculated that the effects of streptomycin and other ototoxic drugs were to destroy the dark secretory cells of the vestibular epithelium and that this destruction leads to a disruption of the microhomeostasis of the fluids in the inner ear and to a secondary destruction of the type I and II hair cells. Lindquist (1973) proposed that albino animals, which lack melanin in their inner ear structurs (Wolff, 1931), would be more resistant to the action of these ototoxic agents than pigmented animals. However, in Experiment I, just the opposite effect was found. The pigmented animals (Long-Evans rats) were much more resistant to the action of sodium arsanilate than albino animals (Wistar rats). The reasons for this are not clear. The lack of strain differences following intratympanic injections suggests that the differences are not due to differences in the vestibular sensitivities.

The Parallel Swing

Method

Subjects. The subjects were approximately 50 male Wistar rats ranging in age from 60 to 160 days, and weighing between 220 and 450 grams.

Apparatus. The apparatus was a parallel swing, shown in Figure 7. The rats were trained to stand on the four round pedestals, 2.54 cm in diameter, that were each mounted on the plunger of a 10 cc B-D Yale glass syringe. The top of the plungers were coated with plastic and the surfaces roughened so they were not slick. The center to center distance of the pedestals is 10 cm front to back and 6.3 cm laterally. The syringes themselves were filled with brake fluid and connected to a Micro Switch PK 8761 4 pressure transducers whose outputs were fed into an IMSAI microprocessor for analysis. The lines from which the swing was suspended were separated by 33 cm front to back and 17.8 laterally when hooked onto the swing. The lines were hooked into the ceiling with the same separations. The distance from the ceiling to the four pedestals upon which the rats stood was 2.13 m and the distance from the top of the pedestals to the bottom of the platform from which the pedestals were suspended was 15 cm. The swing itself was suspended 15 cm above a water trough (not shown) filled with ice water 15 cm deep into which the animals fell if they fell off the pedestals.

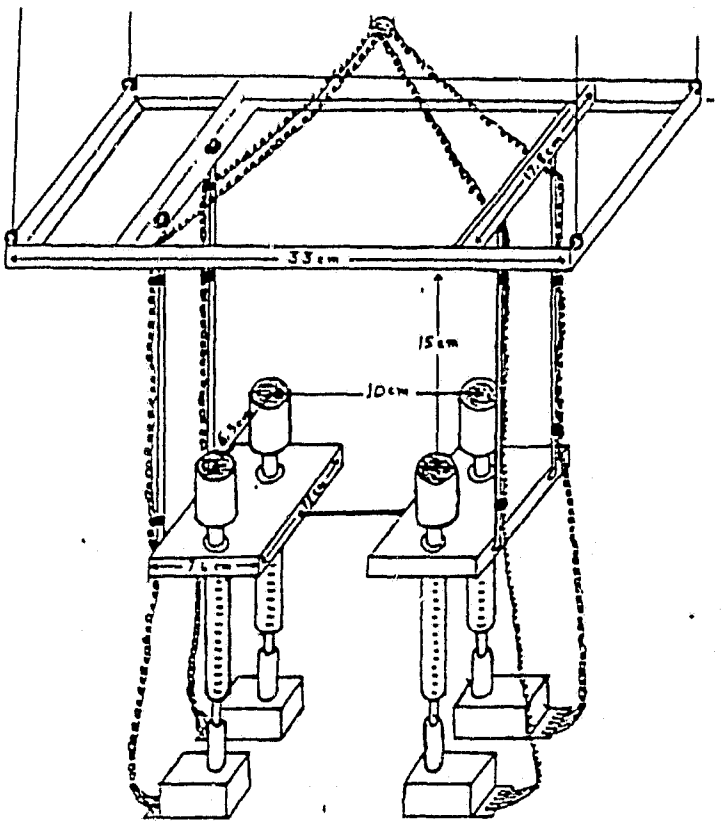

Figure 7. A drawing of the parallel swing.

Procedures. The rats were individually taken from their home cages and placed on the four pedestals of the parallel swing. They were initially held on the pedestals until they remained calm for a few seconds at which time they were removed. When they had been placed on the pedestal several times and had remained calm for a few seconds, the experimenter would then release the animal from his grasp. Within a few seconds the animal would usually begin to look around, rear on its hind legs, etc. and usually fall into the water trough. The animal was quickly removed from the water trough, dried, and placed under a heat lamp for a few minutes to warm. An animal was allowed a maximum of three falls per day into the water trough before it was dried, warmed, and returned to its home cage. After a fall into the water trough the entire process of holding the animal on the pedestal until it was calm and then releasing it was repeated. Within a few days, the rats would remain calm on the platform and avoid falling. When this was achieved, the swing was pulled back a few inches and released. The distance the swing was pulled back was gradually increased to one meter. Once an animal could remain on the swing while it was swinging, it was given a series of three standardized swings per day. A standardized swing was one in which the swing was pulled back one meter, released, and the rat remained on the swing for four consecutive, non-stop swinging cycles. When an animal could reliably do this formal data collection sessions were started and postural adjustments were recorded via the pressure transducers. A data session consisted of three swinging trials per day with each trial consisting of four consecutive non-stop swinging cycles. The rat was taken from its home cage and placed on the swing, the swing was pulled back one meter and released. At the time of release a switch was tripped by the experimenter and the changes in pressure from the pressure transducers were recorded for the four cycles. The swing was then stopped by the experimenter, the rat removed and placed in a holding cage for five minutes before another swinging trial was given. After three swinging trials were given that day, the animal was returned to its home cage.

When stable performances on the swing were recorded, the rats were anesthetized with 40 mg/kg sodium pentobarbital and were given bilateral intratympanic injections of sodium arsanilate of 2.5 mg/kg. Larger doses of sodium arsanilate were not given. Twenty-four hours later the rats were returned to the swing and their performance recorded. When changes in performances were detected, the rats were tested on the swing on successive days until its performance had returned to normal or it was apparent that the performance would not return to normal.

Results

The first finding was that rats do not distribute their body weight on all four legs while on the parallel swing. The well trained rat rides the swing with virtually all of its weight on its back legs. The amount of weight any individual rat places on its front legs varied from trial to trial, swing to swing, within swinging cycles and leg to leg. We could not find a pattern of changes of weight distribution a rat placed on its front legs while swinging. In most cases the rat kept its forelegs in contact with the front pedestals, but the amount of weight on them was not consistently related to any single variable we could identify. Consequently, we discarded foreleg weight shifts as a variable that could be reliably measured.

The second finding was that the pattern of weight distribution on the hind legs was approximately the same. Consequently, we recorded weight shifts from only the right hind leg. The shifts in weight distribution are illustrated in Figure 8 for rat 10. The bottom line of Figure 8 labeled "B" shows the change in pressure recorded from the pressure transducer of the swing with a one kg dead weight strapped to the transducer. The F and B represent the tops of the swing arc. The F is the top of the arc of the swing when it is moving forward with the rat on it, and the B is the top of the swing arc with the rat swinging backward. The maximum pressure is recorded at the bottom of the swing arc and the minimum pressures are recorded at the top of the swing arc. The top lines labeled "A" show the changes in pressure recorded from the right hind leg of the rat. The three tracings are from the three trials of a single day.

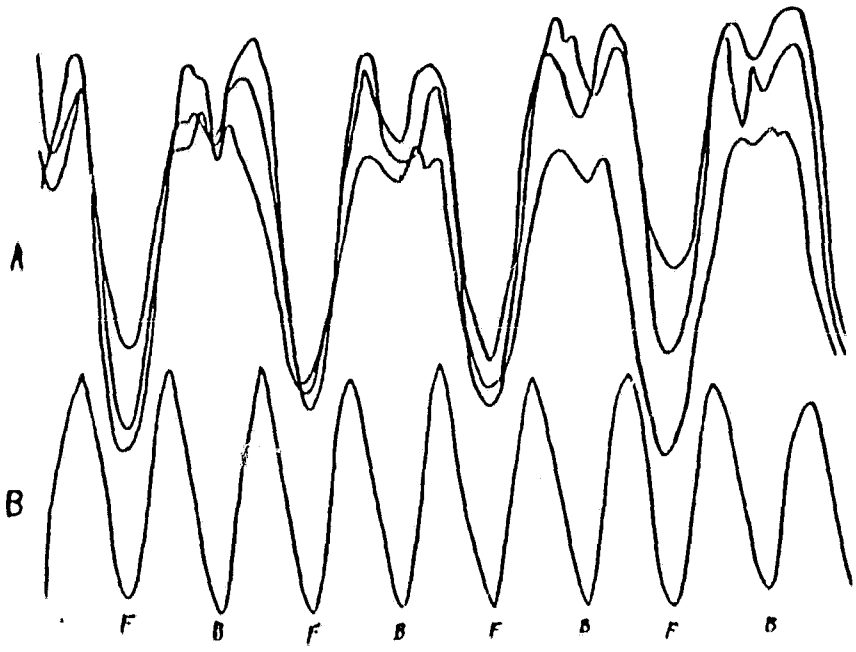

Figure 8. The changes in pressure recorded from the rat's right hind leg while swinging (lines A). Line B is the changes in pressure recorded from a one kilogram dead weight. Increases in pressure are up, decreases are down.

When the rat is swinging forward the weight it places on its hind legs acts like a dead weight. At the top of the forward swing arc, when the rat begins to swing backwards, it shifts its weight to its hind legs throughout the backward swing, shifting its weight slightly at the top of the backward swing arc and then sets down on its hind legs as it stops at the top of the backswing arc and then remains passively on the swing as it begins its swing forward.

Line A of Figure 9 shows the changes in pressure exerted by the right hind leg of rat 10 twenty-four hours after bilateral intratympanic injections of sodium arsanilate (2.5 mg/kg). Line B of this figure is the pressure exerted

by a dead weight of one kilogram. This figure illustrates the major finding from the parallel swing. Following bilateral intratympanic injections of 2.5 mg/kg of sodium arsanilate the rats' performance on the parallel swing resembled the pressure changes recorded from a dead weight more than their pre-injection pattern.

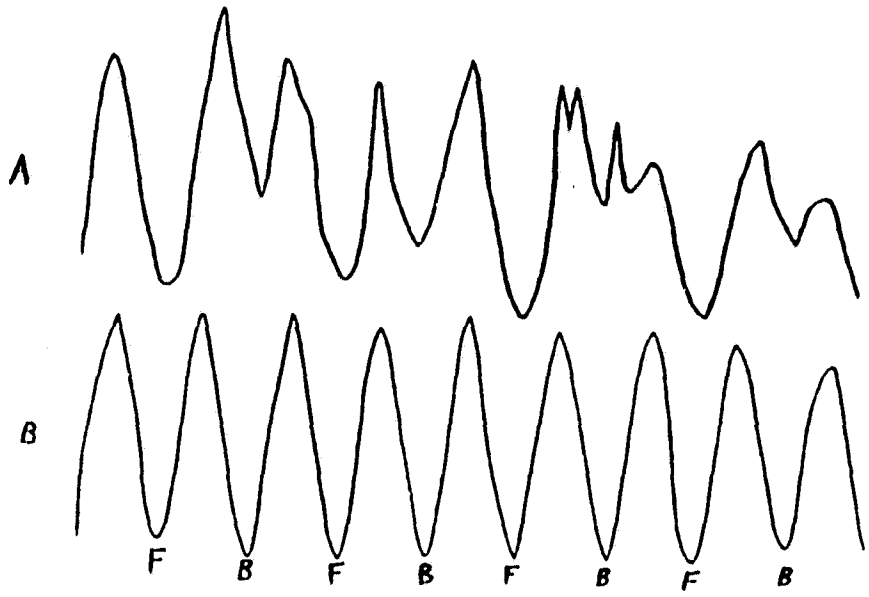

Figure 9. Increases in pressure recorded 24 hours after bilateral intratympanic injections of 2.5 mg/kg sodium arsanilate (line A). Line B is the changes in pressure recorded from a one kilogram dead weight. Increases in pressure are up, decreases are down.

There were behavioral changes following the bilateral intratympanic injections of sodium arsanilate that were readily apparant in the rats that tested on the parallel swing that were not in rats tested in the water maze. When these rats were picked up in their home cages to be weighed, they appeared to be normal and acted as normal as did the rats tested in the water maze. However, when we attempted to place these rats on the parallel swing they would struggle vigorously, and resist all efforts to do so. They were not mean and did not try to bite, but they were clearly distressed. When the experimenter covered their eyes they immediately calmed down, and would then allow their feet to be placed on the pedestals of the swing. Once in place on the swing, the animals looked straight ahead and remained nearly motionless on the swing. It was our impression that before the injections of sodium arsanilate the animals merely rested their feet on the roughened plastic cap of the pedestal. After the injections, it was our impression that the rats were trying to grip the pedestal and "hang onto it" rather than simply stand on it. Nevertheless, to successfully place these animals on the parallel swing their eyes had to be covered before they would calm down and allow themselves to be placed on the swing.

The pre-injection behavior on the parallel swing returned for 70% of the rats. The behavior during recovery was first preceded by a reduction in

struggling when being placed on the swing, then an elimination of the necessity to cover their eyes to place them on the swing. Usually the struggling was gone 48 hours after the intratympanic injections and the necessity to cover their eyes had disappeared by the third trial of the second post-injection day. As the rats progressed through the recovery sequence of reduced struggling and reduced need to cover their eyes, they also changed their pattern on the swing from that of being a "dead weight" to a pattern that was essentially normal and like that shown in Figure 8 for rat #10.

Discussion

There are three basic findings from the parallel swing. The first of these was that the rats did not systematically place weight on their forelegs. Consequently, no reliable recordings could be obtained from them. A second finding was that weight distribution on the hind legs could be recorded and followed as measures of postural adjustment while the rat was swinging on the parallel swing. A third finding was that the rats' performance on the parallel swing, following bilateral intratympanic injections of sodium arsanilate, resembled that of a "dead" weight 24 hours after the injection. In 70% of the rats, the performance of the swing had returned to the preinjection pattern by the third trial of the second post-injection day.

When this proposal was made, we had anticipated that a rat would distribute its weight on all four legs while it was swinging on the parallel swing. That it would shift its weight onto its forelegs when it was swinging forward and onto its backlegs as it swung backwards. In fact, that rat only shifted its weight as it was swinging backwards. In retrospect, the rat's failure to regularly place any weight on its forelegs while on the parallel swing might have been anticipated. When a rat walks alongside a wall and encounters a corner, it changes direction by rearing on its hind legs, rotating its upper body to face in the direction it is turning, then places its forepaws on the walking surface and proceeds to walk in that direction. The rat changes direction not by crossing its forepaws as it walks but by rearing on its hind legs and rotating its body. The rat's fighting posture also suggests that rats prepare for quick changes in direction of movement by rearing on their hind legs. Fighting rats face one another sitting on their hind legs. Similarly, on the parallel swing, where the rat is changing direction of movement frequently, its body weight is shifted to its hindlegs with only one or the other of its forepaws touching a pedestal.

The finding that rats resembled a "dead weight" 24 hours after the bilateral intratympanic injections of sodium arsanilate is difficult to interpret. One interpretation would be that the intratympanic injections induced transient vestibular dysfunction that interfered with the rat's ability to make postural adjustments. Hence, performance on the parallel swing provides a measure of vestibular functioning. A second explanation is that the rats feel that something is "wrong" when they are being placed on the swing, and once on the swing they freeze, as they might in an open field test of emotionality. If this is the case, the rat's freezing behavior could have its performance resemble that of a "dead weight" and we could be measuring the rat's emotional response rather than vestibular dysfunctioning. We have no way at the present time of separating these two interpretations, or any others. Despite this, and because of the rapid recovery, we believe that we are measuring some aspects of

the rat's integration of proprioception and vestibular senses.

This inference is based upon the comparisons that can be made from both the water maze and the parallel swing. The water maze task is one in which the rat relies heavily upon the vestibular and visual systems, and one for which there is visual compensation for vestibular dysfunction. The visual compensation develops slowly, requiring 16 days following bilateral intratympanic injections of 1 mg/kg sodium arsanilate, 45 days for partial recovery following injections of 2.5 mg/kg. On the other hand, the visual system does not appear to be significantly involved in performance on the parallel swing. The rats were distressed on the first day, but by covering their eyes, we were able to place them on the swing, and they were able to remain on it. At the end of the second post-injection day covering their eyes was not necessary, and their performance on the swing had recovered. We do not believe emotional responses would have disappeared this quickly. Furthermore, we believe that the rapid loss of the necessity to cover the eyes suggests that the ability to perform on the parallel swing is not as heavily dependent on visual-vestibular interactions as the water maze. Rather, performance on the parallel swing is more dependent upon the interaction of the proprioceptive and vestibular systems and this interaction is more resistant to mild vestibular dysfunction than visual vestibular interactions. The visual-vestibular interactions, as measured in the water maze, appear to be more sensitive to vestibular dysfunction than the proprioceptive-vestibular interactions measured on the parallel swing. Intratympanic injections of 2.5 mg/kg sodium arsanilate disrupted water maze performance more, and for a longer period of time than it did performance on the parallel swing.

References

Anniko, M., & Ljungqvist, A. The nephrotoxic effect of the ototoxic compound atoxyl. Acta Pathologica of Microbiologica Scandinavia Section A: Pathology, 1977, 85, 751-760.

Anniko, M., & Wersall, J. Damage to the stria vascularis in the guinea pig by acute atoxyl intoxication. Acta Oto-Laryngologica, 1975, 80, 167-179.

Anniko, M., & Wersall, J. Afferent and efferent nerve terminal degeneration in the guinea pig cochlea following atoxyl administration. Acta Oto-Laryngologica, 1976, 82, 325-336.

Anniko, M., & Wersall, J. Experimentally (atoxyl) induced ampullar degeneration and damage to the maculae utriculi. Acta Otolaryngologica, 1977, 83, 429-440.

Brown, H. A., & Hinshaw, H. C. The otologic effects of streptomycin therapy. Annals of Otology, Rhinology, and Laryngology, 1949, 58, 111-116.

Causse, R., Gendet, I., Vallanciian, B. Action vestibulaire de la streptomycine chez la souris. Comptes Rendus des Séances de la Societe de Biologie, 1948, 142, 747-749.

Dichgans, J., Bizzi, E., Morasso, P., & Tagliasco, V. Mechanisms underlying recovery of eye-head coordination following bilateral labyrinthectomy in monkeys. Experimental Brain Research, 1973, 18, 319-322.

Duvall, A. R., & Wersall, J. Site of action of streptomycin upon inner ear sensory cells. Acta Oto-Laryngologica, 1964, 57, 581-598.

Fregly, A. R., & Graybiel, A. Labyrinthine defects as shown by ataxia and caloric tests. Acta Oto-Laryngologica, 1970, 69, 216-222.

Glorig, A., & Fowler, E. P., Jr. Tests for labyrinth function following streptomycin therapy. Annals of Otology, Rhinology, and Laryngology, 1947, 56, 379-394.

Gray, J., & Lissman, H. W. The effects of labyrinthectomy on the coordination of limb movements in the toad. Journal of Experimental Biology, 1947, 24, 36-45.

Hawkins, J. E., Jr., Johnson, L. G., & Aran, J. M. Comparative tests of gentamicin ototoxicity. Journal of Infectious Diseases, 1969, 119, 417-426.

Hawkins, J. E., Jr., & Lurie, M. H. The ototoxicity of dihydrostreptomycin and newomycin in the cat. Annals of Otology, Rhinology, and Laryngology, 1953, 62, 1128-1148.

Hawkins, J. E., Jr., & Preston, R. E. Vestibular ototoxicity. In R. F. Naunton (Ed.), The vestibular system. New York: Academic Press, 1975.

Horn, E., & Rayer, B. Compensation of vestibular lesions in relation to development. Naturwissenschaften, 1978, 65, 441.

Howard, I. P., & Templeton, W. B. Human spatial orientation. New York: John Wiley Publishers, 1966.

Igarashi, M. Squirrel monkey rail test. Acta Oto-Laryngologica, 1968, 66, 199-212.

Igarashi, M., Watanabe, T., & Maxian, P. M. Dynamic equilibrium in squirrel monkeys after unilateral and bilateral labyrinthectomy. Acta Oto-Laryngologica, 1970, 69, 247-253.

Johansen, J. Studies on the effect of arsacetin on the labyrinth. Proceedings of the Fifth International Congress of Otolaryngology, 1953, 579-585.

Jongkes, L. B. W., & Hulk, J. The action of streptomycin on vestibular function. Acta Oto-Laryngologica, 1950, 38, 225-232.

Kanda, T., & Igarashi, M. Ultrastructural changes in vestibular sensory organs after viomycin sulfate intoxication. Acta Oto-Laryngologica, 1969, 68, 474-488.

Lindquist, N. G. Accumulation of drugs on melanin. Acta Radiologica, Stockholm Supplement, 1973, 325, 54-61.

Molitor, H., Grassle, O. E., Kuna, S., Mushett, C. W., & Silber, R. H. Some toxicological and pharmacological properties of streptomycin. Journal of Pharmacy and Experimental Therapeutics, 1946, 86, 151-173.

Northington, P. Syndrome of bilateral vestibular paralysis and its occurrence from streptomycin therapy. Archives of Otolaryngology, 1950, 52, 280-396.

Parker, D. E. The vestibular apparatus. Scientific American, 1980, 243, 118-135.

Pusakulich, R. L., & Nielson, H. C. Cue use in state dependent learning. Physiological Psychology, 1976, 4, 421-428.

Riccio, D., Igarashi, M., & Eskin, A. Modification of vestibular sensitivity in the rat. Annals of Otology, Rhinology, and Laryngology, 1967, 76, 179-188.

Riopella, A. J., & Hubbard, D. G. Vestibular dysfunction and swimming in monkeys. Federation Proceedings, 1979, 38, 1310.

T'ang, Y., & Wu, C. F. The effects of unilateral labyrinthectomy in the albino rat. Chinese Journal of Physiology, 1936, 10, 571-598.

T'ang, Y., & Wu, C. F. The effects of bilateral labyrinthectomy in albino rats. Proceedings of the Chinese Physiological Society, 1937, 10, 33-34.

Watt, D. G. D. Responses of cats to sudden falls: An otolith-originating reflex assisting landings. Journal of Neurophysiology, 1976, 39, 257-265.

Wolff, D. Melanin in the inner ear. Archives of Otolaryngology, 1931, 14, 195-211.