(NASA-CR-166129-VOL-2) A MATHEMATICAL MODEL FOR VERTICAL ATTITUDE TAKEOFF AND LANDING (VATOL) AIRCRAFT SIMULATION. VOLUME 2: MODEL EQUATIONS AND BASE AIRCRAFT DATA (Vought Corp., Dallas, Tex.) 90 p

N81-28035

Unclas
G3/05 31090

NASA CR-166129
VOLUME II
(H. Hill)

A MATHEMATICAL MODEL FOR VERTICAL ATTITUDE TAKEOFF AND LANDING (VATOL) AIRCRAFT SIMULATION

VOLUME II MODEL EQUATIONS AND BASE AIRCRAFT DATA

BY ROBERT L. FORTENBAUGH

DECEMBER 1980

PREPARED UNDER CONTRACT NAS2-10294 BY

VOUGHT CORPORATION
DALLAS, TX 75265

FOR

AMES RESEARCH CENTER
NATIONAL AERONAUTICS AND SPACE ADMINISTRATION

AUG 1981
RECEIVED
NASA STI FACILITY
ACCESS DEPT.

FOREWORD

This document is part of a three volume report prepared under NASA Ames Contract NAS2-10294, Mathematical Modeling for Vertical Attitude Take-Off and Landing (VATOL) Simulation. Volume I: Model Description and Application provides background and details of a generic mathematical model for simulation of VATOL aircraft concepts. A six-degree-of-freedom off-line (non-piloted) digital simulation program incorporating this model was developed and applied to the Vought SF-121 VATOL concept. Volume I gives results of this application which included development and demonstration of a control system for terminal VATOL operations. Volume II: Model Equations and Base Aircraft Data gives all the model equations and SF-121 aircraft data in a simulation data package format. This volume facilitated the development of a piloted VATOL simulation at NASA Ames. Volume III: Users Manual for VATOL Simulation Program provides a description of the six-degree-of-freedom off-line digital simulation program, instructions for its application, and examples of setup decks and output for several of the SF-121 application runs.

Project Monitor for NASA Ames was Mr. Gary Hill. The Principal Investigator for the Vought Corporation was Robert L. Fortenbuagh.

Table of Contents

		Page
	List of Figures	iv
	List of Tables	v
	List of Symbols	vii
1.0	Introduction	1
2.0	Total Airplane Forces and Moments	1
2.0.1	Aerodynamic Forces and Moments	2
2.0.2	Direct Thrust Forces and Moments	18
2.0.3	Inlet Ram Forces and Moments	19
2.0.4	RCS Forces and Moments	21
2.0.5	Coriolis Forces and Moments	25
2.1	Propulsion System Equations	26
2.1.1	Thrust Dynamics	26
2.1.2	Inlet Mass Flow Rates	30
2.1.3	Gyroscopic Moments	31
2.1.4	RCS-Propulsion System Interactions	31
2.2	Actuation System Equations	33
2.2.1	Actuator Inputs	33
2.2.2	Actuator Dynamics	36
2.3	Flight Control System Equations	37
2.3.1	Control System Function Switch	37
2.3.2	Roll Control System	42
2.3.3	Pitch Control System	44
2.3.4	Yaw Control System	45
2.3.5	Heave Control System	48
2.4	Aircraft Equations of Motion	49
2.5	Air Data Equations	52
3.0	SF-121 Data Base	54
3.1	Mass Properties	54
3.2	Geometry Data	54
3.3	Aerodynamic Data	55
3.3.1	Lifting Surface Data	55
3.3.2	Additional Wing Data	57

Table of Contents (Continued)

		Page
3.3.3	Additional Horizontal Tail (Canard) Data	59
3.3.4	Additional Vertical Tail Data	59
3.3.5	Fuselage Data	61
3.4	Propulsion System Data	61
3.4.1	Propulsion System Forces and Moments Data	62
3.4.2	Propulsion System Performance Data	62
3.4.3	Propulsion System Dynamics Data	64
3.5	Inlet Ram Forces and Moments Data	65
3.6	RCS Forces and Moments Data	67
3.7	Actuation System Data	69
3.7.1	Constants for Formulating Actuator Inputs	69
3.7.2	Actuator Dynamics Data	70
3.8	Control System Data	72
3.8.1	Control System Function Switch Data	72
3.8.2	Roll Control System Data	72
3.8.3	Pitch Control System Data	73
3.8.4	Yaw Control System Data	75
3.8.5	Heave Control System Data	77
4.0	References	78

List of Figures

		Page
2-1	Calculation of Individual RCS Jet Forces	22
2-2	Propulsion System Dynamics and Performance Model.	27
2-3	RCS-Propulsion System Interactions Model	28
2-4	Generic Actuator Model	34
2-5	Generic Roll Control System Model.	38
2-6	Generic Pitch Control System Model	39
2-7	Generic Yaw Control System Model	40
2-8	Generic Heave Control System Model	41

List of Tables

		Page
3-1	Lifting Surface Aerodynamic Data	56
3-2	Elevon Effectiveness as a Function of Elevon Deflection ($f_{1_{AERO}}$)	58
3-3	Rudder Effectiveness as a Function of Rudder Deflection ($f_{2_{AERO}}$)	60
3-4	Vertical Tail Effectiveness as a Function of Angle of Attack ($f_{3_{AERO}}$)	60
3-5	Idle and Minimum and Maximum Afterburner Thrust as Functions of Mach Number (f_{PS_1}, f_{PS_2}, and f_{PS_3})	62
3-6	Maximum Inlet Mass Flow Rate as a Function of Mach Number (f_{PS_7})	63
3-7	Engine Acceleration and Deceleration Limits and Time Constant as Functions of Fractional Minimum Afterburner Thrust (f_{PS_4}, f_{PS_5}, and f_{PS_6})	64
3-8	Fractional RPM as a Function of Fractional Minimum Afterburner Thrust (f_{PS_8})	65
3-9	Normalized Inlet Ram Force Ratio as a Function Inlet Velocity Ratio and Geometric Inlet Flow Angle (f_{R_1})	66
3-10	Difference Between Actual and Geometric Inlet Flow Angles as a Function of Inlet Velocity Ratio and Geometric Inlet Flow Angle (f_{R_2})	66
3-11	Actual to Theoretical Inlet Ram Force Ratio as a Function of Inlet Velocity Ratio and Geometric Inlet Flow Angle (f_{R_3})	67
3-12	Available RCS Force as a Function of Percent Bleed (f_{RCS_1} and f_{RCS_2})	68
3-13	Actuator Characteristics	71

List of Tables (Continued)

Page

3-14 Roll Input, Roll Error, and Roll Error Integral Gains as Functions of Airspeed (f_{CS_1}, f_{CS_3} and f_{CS_4}). 72

3-15 Roll Rate, Integral of Roll Rate, and Roll Attitude Selector Gains as Functions of CS_{SW}($f_{CS_{23}}$, $f_{CS_{24}}$, and $f_{CS_{25}}$) 73

3-16 Pitch Input, Pitch Input Integrator, and Pitch Error Gains and Pitch Shaping Filter Time Constant as Functions of Airspeed (f_{CS_7}, f_{CS_8}, f_{CS_9}, and $f_{CS_{26}}$). 74

3-17 Integral of Pitch Rate and Pitch Attitude Selector Gains as Functions of CS_{SW}($f_{CS_{27}}$ and $f_{CS_{28}}$) 74

3-18 Yaw Error, Yaw Error Integral, Yaw Rate Feedback, and Yaw Attitude Feedback Gains as Functions of Airspeed ($f_{CS_{15}}$, $f_{CS_{16}}$, $f_{CS_{17}}$, and $f_{CS_{18}}$) 75

3-19 Lateral Acceleration Feedback Gain as A Function of Dynamic Pressure ($f_{CS_{19}}$). 76

3-20 Integral of Yaw Rate, Yaw Attitude, Yaw Rate, and Roll Attitude to Yaw Selector Gains as Functions of CS_{SW}($f_{CS_{32}}$, $f_{CS_{33}}$, $f_{CS_{30}}$, $f_{CS_{31}}$). 76

List of Symbols

The variables defined herein are those which are passed between equation sections. Other variables are defined by equations and/or figures 2-1 to 2-8 which depict the propulsion system, actuators, and the roll, pitch, yaw, and heave control systems.

B_{AVL}	Percent bleed available for reaction control system - percent
$\overline{BLD}$	Percent bleed used by reaction control system - percent
CS_{SW}	Control system function switch
$C_{D_{WT}}$, $C_{L_{WT}}$	Wing drag and lift coefficients
C_D, C_L, C_m	Generalized drag, lift, and pitch moment coefficients
$K_{\dot{m}}$	Fraction of maximum inlet mass flow rate based on average single engine thrust
L_i, M_i, N_i	Body axis roll, pitch, and yaw moments, respectively, contributed by i where i = GYRO, TRST, RAM, AERO, RCS, COR - ft lb
L_{TOT}, M_{TOT}, N_{TOT}	Total body axis roll, pitch, and yaw moments, respectively, applied to aircraft - ft lb
M_N	Mach number
$\dot{m}(I)$	Inlet mass flow rate of Ith engine, lbm/sec
$n_{x_{CG}}$, $n_{y_{CG}}$, $n_{z_{CG}}$	cg accelerations along the X, Y, and Z body axes, respectively - g's
p, q, r	Angular rotation rates about the X, Y, and Z body axes, respectively - rad/sec
p_s, r_s	Angular rotation rates about the X and Y stability axes, respectively - rad/sec
$\bar{q}$	Dynamic pressure - lb/ft^2
$T_F(I)$	Thrust level of Ith engine normalized to maximum non-afterburning thrust

List of Symbols (Continued)

$T_o(I)$	Thrust level of Ith engine - lb
$T_{APPL}(I)$	Thrust applied to aircraft by Ith engine after correcting for reaction control system interactions - lb
T_{CMD}	Thrust commanded by heave control system and manual throttle - lb
u, v, w	Aircraft inertial velocity components along X, Y and Z body axes, respectively - ft/sec
$\dot{u}, \dot{v}, \dot{w}$	Aircraft inertial acceleration components along X, Y, and Z body axes, respectively - ft/sec^2
u_{AS}, v_{AS}, w_{AS}	Aircraft airspeed components along X, Y and Z body axes, respectively - ft/sec
V_A	Total aircraft airspeed - ft/sec
$X_{IN}(I), Y_{IN}(I), Z_{IN}(I)$	Location of Ith engine inlet relative to cg in body axes - ft
X_i, Y_i, Z_i	Body axis X, Y, and Z forces contributed by i where i = GYRO, TRST, RAM, AERO, RCS, COR - lb
$X_{TOT}, Y_{TOT}, Z_{TOT}$	Total body axis X, Y, and Z forces applied to aircraft - lb
$\dot{X}_e, \dot{Y}_e, \dot{Z}_e$	Aircraft inertial velocity components along X, Y, and Z inertial axes, respectively - ft/sec
α	Aircraft angle of attack = $\tan^{-1}(w_{AS}/u_{AS})$ - rad
$\dot{\alpha}$	Rate of change of angle of attack - rad/sec
α_S	Generalized angle of attack of a lifting surface - rad
α_{WT}	Wing angle of attack - rad
$\Delta L_i, \Delta M_i, \Delta N_i$	Body axis roll, pitch, and yaw aerodynamic moments, respectively, contributed by i where i = W, V, H, F

List of Symbols (Continued)

ΔX_i, ΔY_i, ΔZ_i	Body axis X, Y, and Z aerodynamic forces contributed by i where i = W, V, H, F
ΔX_{CP}	Generalized center of pressure shift of a lifting surface - ft
$\delta_{C_W}(I)$, $\delta_{C_{W_C}}(I)$	Actual and commanded deflections of Ith wing half control surface where I = 1 is left wing half and 2 is right wing half - rad
$\delta_{LEF_W}(I)$, $\delta_{LEF_{W_C}}(I)$	Actual and commanded deflections of Ith wing half leading edge flap where I = 1 is left wing half and 2 is right wing half - rad
$\delta_{TEF_W}(I)$, $\delta_{TEF_{W_C}}(I)$	Actual and commanded deflections of Ith wing half trailing edge flap where I = 1 is left wing half and 2 is right wing half - rad
δ_e	Elevator deflection - rad
δ_{C_H}, $\delta_{C_{H_C}}$	Actual and commanded deflections of horizontal stabilizer control surface - rad
δ_{LEF_H}, $\delta_{LEF_{H_C}}$	Actual and commanded deflections of horizontal stabilizer leading edge flap - rad
δ_{TEF_H}, $\delta_{TEF_{H_C}}$	Actual and commanded deflections of horizontal stabilizer trailing edge flap - rad
δ_r	Rudder deflection - rad
δ_{C_V}, $\delta_{C_{V_C}}$	Actual and commanded deflections of vertical stabilizer control surface - rad
δ_{LEF_V}, $\delta_{LEF_{V_C}}$	Actual and commanded deflections of vertical stabilizer leading edge flap - rad
δ_{TEF_V}, $\delta_{TEF_{C_V}}$	Actual and commanded deflections of vertical stabilizer trailing edge flap - rad
δ_{LEF}, δ_{TEF}	Generalized leading and trailing edge flap deflections - rad
$\delta_{RCS}(I)$, $\delta_{RCS_C}(I)$	Actual and commanded normalized opening of Ith reaction control system jet

List of Symbols (Continued)

δ_{PITCH}	Normalized pitch control deflection
δ_{ROLL}	Normalized roll control deflection
δ_{YAW}	Normalized yaw control deflection
δ_{HEAVE}	Normalized cockpit heave rate control deflection
δ_{THROT}	Normalized cockpit manual throttle deflection
δ_{LNGSTK}	Normalized cockpit longitudinal stick deflection
δ_{LATSTK}	Normalized cockpit lateral stick deflection
δ_{PED}	Normalized cockpit pedal deflection
$\delta_{p_{BUT}}$, $\delta_{q_{BUT}}$, $\delta_{r_{BUT}}$	Normalized cockpit deflections of trimmers for roll, pitch, and yaw control systems, respectively
θ, ϕ, ψ	Euler pitch, roll, and yaw angles, respectively - rad
$\theta_T(I)$, $\theta_{T_C}(I)$	Actual and commanded pitch thrust deflections of Ith engine nozzle - rad
ρ	Air density - slug/ft^3
$\psi_T(I)$, $\psi_{T_C}(I)$	Actual and commanded yaw thrust deflections of Ith engine nozzle - rad

Subscripts:

GYRO	Gyroscopic coupling
TRST	Direct thrust
RAM	Inlet ram
AERO	Aerodynamic
COR	Coriolis
W	Wing

List of Symbols (Continued)

V	Vertical stabilizer
H	Horizontal stabilizer
F	Fuselage
A	Average

1.0 Introduction

The basic objective of this document is to present without discussion all the equations which have been incorporated in a VATOL six-degree-of-freedom off-line digital simulation program and data for the Vought SF-121 VATOL aircraft concept which served as the baseline for the development of this program. For details and background of the various mathematical models the reader is referred to Volume I of the documentation for this contract. The equations and data are intended to facilitate the development of a piloted VATOL simulation at NASA Ames.

The equation presentation format is to first state the equations which define a particular model segment. This is followed by listings of constants required to quantify that model segment, input variables required to exercise the model segment, and output variables required by other model segments. In several instances a series of input or output variables are followed by a section number in parentheses which identifies the model segment of origination or termination of those variables.

2.0 Total Airplane Forces and Moments

1. $X_{TOT} = X_{TRST} + X_{RAM} + X_{AERO} + X_{RCS} + X_{COR}$

2. $Y_{TOT} = Y_{TRST} + Y_{RAM} + Y_{AERO} + Y_{RCS} + Y_{COR}$

3. $Z_{TOT} = Z_{TRST} + Z_{RAM} + Z_{AERO} + Z_{RCS} + Z_{COR}$

4. $L_{TOT} = L_{TRST} + L_{RAM} + L_{AERO} + L_{RCS} + L_{COR}$

5. $M_{TOT} = M_{TRST} + M_{RAM} + M_{AERO} + M_{RCS} + M_{COR}$

6. $N_{TOT} = N_{TRST} + N_{RAM} + N_{AERO} + N_{RCS} + N_{COR}$

<u>Inputs</u>: X_{TRST}, Y_{TRST}, Z_{TRST}, L_{TRST}, M_{TRST}, N_{TRST} (Section 2.0.2)

X_{RAM}, Y_{RAM}, Z_{RAM}, L_{RAM}, M_{RAM}, N_{RAM} (Section 2.0.3)

X_{AERO}, Y_{AERO}, Z_{AERO}, L_{AERO}, M_{AERO}, N_{AERO} (Section 2.0.1)

X_{RCS}, Y_{RCS}, Z_{RCS}, L_{RCS}, M_{RCS}, N_{RCS} (Section 2.0.4)

X_{COR}, Y_{COR}, Z_{COR}, L_{COR}, M_{COR}, N_{COR} (Section 2.0.5)

<u>Outputs</u>: X_{TOT}, Y_{TOT}, Z_{TOT}, L_{TOT}, M_{TOT}, N_{TOT}

2.0.1 Aerodynamic Forces and Moments

2.0.1.1 Wing Forces and Moments

Equations 1 through 13 in this section apply to the left wing (I = 1) and right wing (I = 2) by appropriate changes in constants. The equations are written in DO loop format with index (I) = 1 and 2.

1. $X_{WING}(I) = FS_{CG} - FS_W(I)$

2. $Y_{WING}(I) = BL_W(I) - BL_{CG}$

3. $Z_{WING}(I) = WL_{CG} - WL_W(I)$

4. $u_W = u_{AS} + q\ Z_{WING}(I)$

5. $w_W = w_{AS} - q\ X_{WING}(I)$

6. $V_{XZ}(I) = \sqrt{u_W^2 + w_W^2}$

7. $\Delta\alpha_{\delta_{CW}}(I) = K_{\delta_C}(I)\delta_{C_W}(I)$

8. $\alpha_W(I) = \tan^{-1}(w_W/u_W)$

9. $\alpha_W'(I) = \alpha_W(I) + i_W(I) + \Delta\alpha_{\delta_{CW}}(I)$

10. $K_{TEF_W} = f_{1_{AERO}}(\delta_{TEF_W}(I))$

11. $\delta_{TEF_W}'(I) = K_{TEF_W}\delta_{TEF_W}(I)$

The calculations indicated functionally in equations 12 through 15 are performed by the generalized aerodynamic equations of Section 2.0.1.4.

12. $C_{L_W}(I) = f_L(\delta_{LEF_W}(I), \delta_{TEF_W}'(I), \alpha_W'(I)$, aero constants)

13. $C_{D_W}(I) = f_D(\delta_{LEF_W}(I), \delta'_{TEF_W}(I), \alpha'_W(I)$, aero constants)

14. $C_{m_W}(I) = f_m(\delta_{LEF_W}(I), \delta'_{TEF_W}(I), \alpha'_W(I)$, aero constants)

15. $\Delta X_{WING}(I) = \begin{cases} f_{\Delta X}(\delta_{LEF_W}(I), \delta'_{TEF_W}(I), \alpha'_W(I), \text{aero constants}) & \alpha'_W(I) \geq 0. \\ 0 & \alpha'_W(I) < 0. \end{cases}$

16. $C_{L_{WT}} = 0.5(C_{L_W}(1) + C_{L_W}(2))$

17. $C_{D_{WT}} = 0.5(C_{D_W}(1) + C_{D_W}(2))$

18. $\alpha_{WT} = 0.5(\alpha'_W(1) + \alpha'_W(2))$

19. $V_{XZ_T} = 0.5(V_{XZ}(1) + V_{XZ}(2))$

20. $\beta_W = \tan^{-1}({}^{v}AS/V_{XZ_T})$

21. $\bar{q}_W = 0.5\rho S_W V^2_{XZ_T}$

22. $C_{n_{p_{C_L}}} = -\left[AR_W + 6(AR_W + \cos\Lambda_{\frac{1}{4}}) \left[0.5(X_{WING}(1) + X_{WING}(2))\tan\Lambda_{\frac{1}{4}}/(c_W AR_W) + (\tan\Lambda_{\frac{1}{4}})^2/12 \right] \right] / (6AR_W + 4\cos\Lambda_{\frac{1}{4}})$

23. $b/V = \begin{cases} 0 & V_{XZ} = 0 \\ 0.5b_W/V_{XZ} & V_{XZ} \neq 0 \end{cases}$

24. $L_{W_S} = \bar{q}_W b_W \left[(C_{\ell_{\beta_o}} + C_{\ell_{\beta_{C_L}}} C_{L_{WT}})\beta_W + (b/V)(C_{\ell_{r_{C_L}}} C_{L_{WT}} r_s + C_{\ell_{p_W}} p_s) \right]$

25. $N_{W_S} = \bar{q}_W b_W \left[(C_{n_{\beta_o}} + C_{n_{\beta_{C_L^2}}} C^2_{L_{WT}})\beta_W + (b/V) r_s (C_{n_{r_{C_L^2}}} C^2_{L_{WT}} + C_{n_{r_{C_D}}} C_{D_{WT}}) + (b/V) p_S C_{n_{p_{C_L}}} C_{L_{WT}} \right]$

26. $Y_{W_S} = \bar{q}_W C_{Y_{\beta_{C_L^2}}} C^2_{L_{WT}} \beta_W$

27. $X_W(1) = 0.5\ \bar{q}_W\ \left[C_{L_W}(1)\ \sin(\alpha_W(1)) - C_{D_W}(1)\ \cos(\alpha_W(1))\right]$

28. $X_W(2) = 0.5\ \bar{q}_W\ \left[C_{L_W}(2)\ \sin(\alpha_W(2)) - C_{D_W}(2)\ \cos(\alpha_W(2))\right]$

29. $Z_W(1) = 0.5\ \bar{q}_W\ \left[-C_{L_W}(1)\ \cos(\alpha_W(1)) - C_{D_W}(1)\ \sin(\alpha_W(1))\right]$

30. $Z_W(2) = 0.5\ \bar{q}_W\ \left[-C_{L_W}(2)\ \cos(\alpha_W(2)) - C_{D_W}(2)\ \sin(\alpha_W(2))\right]$

31. $\alpha' = \alpha_{WT} - 0.5\ (i_W(1) + i_W(2)) - 0.5\ (\Delta\alpha_{\delta_{CW}}(1) + \Delta\alpha_{\delta_{CW}}(2))$

32. $L_{W_B} = L_{W_S}\ \cos\alpha' - N_{W_S}\ \sin\alpha'$

33. $N_{W_B} = N_{W_S}\ \cos\alpha' + L_{W_S}\ \sin\alpha'$

34. $M_{W_B} = \bar{q}_W c_W\ \left[C_{m_{o_W}} + 0.5\ (C_{m_W}(1) + C_{m_W}(2))\right]$

35. $\Delta X_W = X_W(1) + X_W(2)$

36. $\Delta Y_W = Y_{W_S}$

37. $\Delta Z_W = Z_W(1) + Z_W(2)$

38. $\Delta L_W = L_{W_B} + Z_W(1)\ Y_{WING}(L) + Z_W(2)\ Y_{WING}(2) - 0.5\ Y_{W_S}\ (Z_{WING}(1)$

$+ Z_{WING}(2))$

39. $\Delta M_W = M_{W_B} + X_W(1)\ Z_{WING}(1) - Z_W(1)(X_{WING}(1) - \Delta X_{WING}(1)c_W)$

$+ X_W(2)\ Z_{WING}(2) - Z_W(2)(X_{WING}(2) - \Delta X_{WING}(2)c_W)$

40. $\Delta N_W = N_{W_B} - X_W(1)Y_{WING}(1) - X_W(2)Y_{WING}(2) + 0.5Y_W\ \left[X_{WING}(1)\right.$

$\left. + X_{WING}(2) - (\Delta X_{WING}(1) + \Delta X_{WING}(2))c_W\right]$

Constants: FS_{CG}, WL_{CG}, BL_{CG}, $FS_W(1)$, $FS_W(2)$, $WL_W(1)$, $WL_W(2)$, $BL_W(1)$, $BL_W(2)$, $K_{\delta_C}(1)$, $K_{\delta_C}(2)$, $i_W(1)$, $i_W(2)$, S_W, b_W, c_W, $C_{\ell_{\beta_o}}$, $C_{\ell_{\beta_{C_L}}}$, $C_{\ell_{p_W}}$, $C_{n_{\beta_o}}$, $C_{n_{\beta_{C_L^2}}}$, $C_{n_{r_{C_L^2}}}$, $C_{n_{r_{C_D}}}$, $C_{Y_{\beta_{C_L^2}}}$, $C_{m_{o_W}}$, AR_W, $\Lambda_{\frac{1}{4}}$

Inputs: u_{AS}, v_{AS}, w_{AS}, q, p_s, r_s, $\delta_{C_W}(1)$, $\delta_{C_W}(2)$, $\delta_{LEF_W}(1)$, $\delta_{LEF_W}(2)$, $\delta_{TEF_W}(1)$, $\delta_{TEF_W}(2)$, ρ

Outputs: ΔX_W, ΔY_W, ΔZ_W, ΔL_W, ΔM_W, ΔN_W (Section 2.0.1.6)

α_{WT}, $C_{D_{WT}}$, $C_{L_{WT}}$ (Section 2.0.1.2)

2.0.1.2 Horizontal Tail Forces and Moment

These equations apply to both tail forward and tail aft configurations with appropriate change of constants.

1. $X_H = FS_{CG} - FS_H$

2. $Y_H = BL_H - BL_{CG}$

3. $Z_H = WL_{CG} - WL_H$

4. $X_{WEL} = 0.5(X_{WING}(1)+X_{WING}(2)) - X_H - 0.6\ b_W \cos\left[0.5(i_W(1)+i_W(2))\right] / AR_W$

5. $Z_{WEL} = 0.5(Z_{WING}(1)+Z_{WING}(2)) - Z_H + 0.6\ b_W \sin\left[0.5(i_W(1)+i_W(2))\right] / AR_W$

6. $A_{WEL} = \tan^{-1}(Z_{WEL}/X_{WEL})$

7. $D_{WEL} = \sqrt{X_{WEL}^2+Z_{WEL}^2}\ AR_W/b_W$

8. $u_H = u_{AS} + qZ_H - rY_H$

9. $w_H = w_{AS} + pY_H - qX_H$

10. $\varepsilon = (\varepsilon/C_{L_W})C_{L_{WT}}$

11. $\delta_{TEF_A} = 0.5(\delta_{TEF_W}(1) + \delta_{TEF_W}(2))$

12. $\delta_{LEF_A} = 0.5(\delta_{LEF_W}(1) + \delta_{LEF_W}(2))$

13. $\Delta\alpha_1 = \alpha_{WT} + 0.01745$

14. $\Delta\alpha_2 = \alpha_{WT} - 0.01745$

The calculations indicated functionally in equations 15 and 16 are performed by the generalized aerodynamic equations of Section 2.0.1.4.

15. $C_{L_1} = f_L(\delta_{LEF_A}, \delta_{TEF_A}, \Delta\alpha_1, \text{aero constants})$

16. $C_{L_2} = f_L(\delta_{LEF_A}, \delta_{TEF_A}, \Delta\alpha_2, \text{aero constants})$

17. $$\Delta\alpha_H = \begin{cases} (\varepsilon/C_{L_W})(C_{L_1}-C_{L_2})\dot{\alpha}\left[FS_H - 0.5(FS_W(1)+FS_W(2))\right]/(5)(0.0349) & u_H \leq 5 \\ (\varepsilon/C_{L_W})(C_{L_1}-C_{L_2})\dot{\alpha}\left[FS_H - 0.5(FS_W(1)+FS_W(2))\right]/(.0349\ u_H) & u_H > 5 \end{cases}$$

18. $\Delta\alpha_{\delta_e} = K_{\alpha_{\delta_e}}\delta_e$

19. $\alpha_H = \tan^{-1}(w_H/u_H) - \varepsilon + \Delta\alpha_H + i_H + \Delta\alpha_{\delta_e}$

The calculations indicated functionally in equations 20 through 23 are performed by the generalized aerodynamic equations of Section 2.0.1.4.

20. $C_{L_H} = f_L(\delta_{LEF_H}, \delta_{TEF_H}, \alpha_H, \text{aero constants})$

21. $C_{m_H} = f_m(\delta_{LEF_H}, \delta_{TEF_H}, \alpha_H, \text{aero constants})$

22. $C_{D_H} = f_D(\delta_{LEF_H}, \delta_{TEF_H}, \alpha_H, \text{aero constants})$

23. $$\Delta X_{HT} = \begin{cases} f_{\Delta X}(\delta_{LEF_H}, \delta_{TEF_H}, \alpha_H, \text{aero constants}) & \alpha_H \geq 0. \\ 0 & \alpha_H < 0. \end{cases}$$

24. $A_H = \epsilon - \alpha + A_{WEL}$

25. $D_{H_S} = D_{WEL} \mid \sin(A_H) \mid$

26. $D_{H_C} = D_{WEL} \mid \cos(A_H) \mid$

27. $Z = 0.68 \sqrt{C_{D_{WT}} (D_{H_C} + 0.15)}$

28. $$(\Delta\bar{q}/\bar{q}_o) = \begin{cases} 2.42 \sqrt{C_{D_{WT}}} \left[\cos(D_{H_S} \pi/(2Z))\right]^2 / (D_{H_C} + 0.30) & D_{H_S} < Z \text{ and } |A_H| < \frac{\pi}{2} \\ 0 & D_{H_S} \geq Z \text{ or } |A_H| \geq \frac{\pi}{2} \text{ or } X_H \geq 0. \end{cases}$$

29. $\bar{q}_{EFF} = 0.5\rho S_H (1. - (\Delta\bar{q}/\bar{q}_o))(u_H^2 + w_H^2)$

30. $\alpha_{H_1} = \alpha_H - i_H - \Delta\alpha_{\delta_e}$

31. $\Delta X_H = \bar{q}_{EFF}(C_{L_H} \sin \alpha_{H_1} - C_{D_H} \cos\alpha_{H_1})$

32. $\Delta Y_H = 0$

33. $\Delta Z_H = \bar{q}_{EFF}(-C_{L_H} \cos\alpha_{H_1} - C_{D_H} \sin\alpha_{H_1})$

34. $\Delta L_H = \Delta Z_H Y_H - \Delta Y_H Z_H$

35. $\Delta M_H = \bar{q}_{EFF} c_H (C_{m_{o_H}} + C_{m_H}) + \Delta X_H Z_H - \Delta Z_H (X_H - \Delta X_{HT} c_H)$

36. $\Delta N_H = -\Delta X_H Y_H + \Delta Y_H (X_H - \Delta X_{HT} c_H)$

<u>Constants</u>: FS_{CG}, WL_{CG}, BL_{CG}, FS_H, WL_H, BL_H, b_W, AR_W, $i_W(1)$, $i_W(2)$ (ϵ/C_{L_W}), $FS_W(1)$, $FS_W(2)$, $K_{\alpha_{\delta_e}}$, S_H, i_H, c_H, $C_{m_{o_H}}$

<u>Inputs</u>: u_{AS}, w_{AS}, p, q, r, $\dot{\alpha}$, α, $\delta_{TEF_W}(1)$, $\delta_{TEF_W}(2)$, $\delta_{LEF_W}(1)$, $\delta_{LEF_W}(2)$, δ_e, $C_{L_{WT}}$, $C_{D_{WT}}$, ρ, δ_{LEF_H}, δ_{TEF_H}

Outputs: ΔX_H, ΔY_H, ΔZ_H, ΔL_H, ΔM_H, ΔN_H (Section 2.0.1.6)

2.0.1.3 Vertical Tail Forces and Moments

1. $X_V = FS_{CG} - FS_V$

2. $Y_V = BL_V - BL_{CG}$

3. $Z_V = WL_{CG} - WL_V$

4. $u_V = u_{AS} + qZ_V - rY_V$

5. $v_V = v_{AS}\ (1. - K_V) - pZ_V + rX_V$

6. $K_{EFF_r} = f_{2_{AERO}}(\delta_{C_V})$

7. $\delta_r = K_{EFF_r}\delta_{C_V}$

8. $\Delta\alpha_{\delta_r} = K_{\alpha_{\delta_r}}\delta_r$

9. $\alpha_V = \tan^{-1}(-v_V/u_V) + \Delta\alpha_{\delta_r} + i_V$

The calculations indicated functionally in equations 10 through 13 are performed by the generalized aerodynamic equations of motion of Section 2.0.1.4.

10. $C_{L_V} = f_L(\delta_{LEF_V}, \delta_{TEF_V}, \alpha_V,$ aero constants)

11. $C_{D_V} = f_D(\delta_{LEF_V}, \delta_{TEF_V}, \alpha_V,$ aero constants)

12. $C_{m_V} = f_m(\delta_{LEF_V}, \delta_{TEF_V}, \alpha_V,$ aero constants)

13. $\Delta X_{VT} = f_{\Delta X}(\delta_{LEF_V}, \delta_{TEF_V}, \alpha_V,$ aero constants)

14. $\alpha_{V_1} = \alpha_V - \Delta\alpha_{\delta_r} - i_V$

15. $V_{T_{EFF}} = f_{3_{AERO}}(\alpha)$

16. $\bar{q}_V = 0.5\ \rho S_V\ V_{T_{EFF}}(u_V^2 + v_V^2)$

17. $\Delta X_V = \bar{q}_V(C_{L_V} \sin\alpha_{V_1} - C_{D_V} \cos\alpha_{V_1})$

18. $\Delta Y_V = \bar{q}_V(C_{L_V} \cos\alpha_{V_1} + C_{D_V} \sin\alpha_{V_1})$

19. $\Delta Z_V = 0$

20. $\Delta L_V = -\Delta Y_V Z_V + \Delta Z_V Y_V$

21. $\Delta M_V = \Delta X_V Z_V - \Delta Z_V(X_V - \Delta X_{VT} c_V)$

22. $\Delta N_V = \bar{q}_V C_V(C_{n_{o_V}} + C_{m_V}) + \Delta Y_V(X_V - \Delta X_{VT} c_V) - \Delta X_V Y_V$

<u>Constants</u>: FS_{CG}, BL_{CG}, WL_{CG}, FS_V, BL_V, WL_V, K_V, $K_{\alpha_{\delta_r}}$, i_V, S_V, c_V, $C_{n_{o_V}}$

<u>Inputs</u>: u_{AS}, v_{AS}, p, q, r, δ_r, δ_{LEF_V}, δ_{TEF_V}, α

<u>Outputs</u>: ΔX_V, ΔY_V, ΔZ_V, ΔL_V, ΔM_V, ΔN_V (Section 2.1.6)

2.0.1.4 Generalized Aerodynamic Equations

These equations generate the lift, drag, and pitching moment coefficients and center of pressure shift for lifting surfaces as a function of local angle of attack and trailing and leading edge flap deflections. The equations are programmed as a subroutine. With appropriate constants and inputs the subroutine outputs represent wing, horizontal tail, or vertical tail aero contributions.

1. $$\alpha_S = \begin{cases} \alpha_S & -\pi \le \alpha_S \le \pi \\ \alpha_S + 2\pi & \alpha_S < -\pi \\ \alpha_S - 2\pi & \alpha_S > \pi \end{cases}$$

2. $$\alpha_{CALC} = \begin{cases} \pi - \alpha_S & \alpha_S \geq \pi/2 \\ -\alpha_S & -\frac{\pi}{2} < \alpha_S < 0 \\ \pi + \alpha_S & \alpha_S \leq -\frac{\pi}{2} \\ \alpha_S & 0 \leq \alpha_S < \frac{\pi}{2} \end{cases}$$

Equations 3 through 11 define calculated constants.

3. $$\tan \Lambda_{\frac{1}{2}} = \tan \Lambda_{\frac{1}{4}} - (1 - \lambda) / \left[AR(1 + \lambda)\right]$$

4. $$C_{L_{\alpha_e}} = 2\pi AR_e / \left[2. + \sqrt{(2\pi AR_e/a_o)^2 (1 + \tan^2\Lambda_{\frac{1}{2}}) + 4}\right]$$

5. $$K_{W(B)} = 0.527 \ (1 + d/b)^{1.534} + 0.473$$

6. $$C_1 = 4.47\lambda^3 - 8.125\lambda^2 + 3.712\lambda - 0.029$$

7. $$C_2 = 2.943\lambda^3 - 7.208\lambda^2 + 5.199\lambda - 0.113$$

8. $$J = 0.3 \ (1 + C_1) AR \cos_{\Lambda_{LE}} \left[(1 + C_1)(1 + C_2) - \left[\frac{(1+C_2) AR \tan\Lambda_{LE}}{7}\right]^3\right]$$

9. $$K = \begin{cases} 1.628\sqrt{J} & J \geq 0 \\ 0.22J & J < 0 \end{cases}$$

10. $$C_{N_{\alpha\alpha_o}} = (C_{L_{MAX}}/\cos\alpha_b - C_{L_{\alpha_e}} K_{W(B)} (Se/S)(\sin 2\alpha_b)/2) \ / \ \left[\sin \alpha_b |\sin \alpha_b|\right]$$

11. $$e = 0.527 + 0.1494 \ AR_e - 0.01429 \ AR_e^2$$

12. $$C_{N_{\alpha\alpha}} = \begin{cases} K \ \cos\left[\frac{\pi \tan \alpha_{CALC}}{2 \tan \alpha_b}\right]^{2.4} & \alpha_{CALC} \leq \alpha_b \\ \left[1.16 - C_{N_{\alpha\alpha_o}}\right] \left(1 - \frac{\tan \alpha_b}{\tan \alpha_{CALC}}\right) & \\ -0.674 \ C_{L_{\alpha_e}} \sin\left[\pi\left[1 - 0.6 \frac{\tan\alpha_b}{\tan\alpha_{CALC}} - 0.4\left(\frac{\tan\alpha_b}{\tan\alpha_{CALC}}\right)^2\right]\right] & \alpha_{CALC} > \alpha_b \end{cases}$$

$$13.\quad C_D' = \begin{cases} C_{D_o} & \alpha_{CALC} \le \alpha_b \\ \left[\dfrac{(\alpha_{CALC} - \frac{\pi}{2})}{(\alpha_b - \frac{\pi}{2})}\right]^2 (C_{D_o} - 1.2\,\dfrac{S_e}{S}) + 1.2\,\dfrac{S_e}{S} & \alpha_{CALC} > \alpha_b \end{cases}$$

$$14.\quad \Delta X_{CP} = \begin{cases} CP_1(\cos\alpha_{CALC} - 1.) + CP_2 \sin\alpha_{CALC} & \alpha_{CALC} \le \alpha_b \\ \left[\dfrac{(\alpha_{CALC} - \alpha_b)}{(\frac{\pi}{2} - \alpha_b)}\right]\left[(CP_3 - CP_1 \cos\alpha_b) - CP_2 \sin\alpha_b\right] & \\ \qquad + CP_1(\cos\alpha_b - 1.) + CP_2 \sin\alpha_b & \alpha_{CALC} > \alpha_b \end{cases}$$

$$15.\quad C_L' = (C_{L_{\alpha_e}} K_{W(B)} (S_e/S) \cos\alpha_{CALC} + (C_{N_{\alpha\alpha_o}} + C_{N_{\alpha\alpha}}) \sin\alpha_{CALC}) \cos\alpha_{CALC} \sin\alpha_{CALC}$$

Equations 16 through 19 incorporate trailing edge flap effects.

$$16.\quad SF_1 = (1. - \frac{\alpha_{CALC} - \alpha_b}{\Delta\alpha_{TEF}})$$

$$17.\quad \Delta C_{L_{TEF}} = \begin{cases} \left(\dfrac{\Delta C_{L_o}}{\delta_{TEF}}\right) \delta_{TEF} + \left[\left(\dfrac{\Delta C_{L_{MAX}}}{\delta_{TEF}}\right) - \left(\dfrac{\Delta C_{L_o}}{\delta_{TEF}}\right)\right] \delta_{TEF} \left(\dfrac{\alpha_{CALC}}{\alpha_b}\right) & \alpha_{CALC} \le \alpha_b \\ \left(\dfrac{\Delta C_{L_{MAX}}}{\delta_{TEF}}\right) \delta_{TEF}\, SF_1 & \alpha_b < \alpha_{CALC} < \alpha_b + \Delta\alpha_{TEF} \\ 0 & \alpha_{CALC} \ge \alpha_b + \Delta\alpha_{TEF} \end{cases}$$

$$18.\quad \Delta C_{D_{TEF}} = \begin{cases} \left(\dfrac{\Delta C_D}{\delta_{TEF}}\right) |\delta_{TEF}| & \alpha_{CALC} \le \alpha_b \\ \left(\dfrac{\Delta C_D}{\delta_{TEF}}\right) |\delta_{TEF}| SF_1 & \alpha_b < \alpha_{CALC} < \alpha_b + \Delta\alpha_{TEF} \\ 0 & \alpha_{CALC} \ge \alpha_b + \Delta\alpha_{TEF} \end{cases}$$

$$19.\quad \Delta C_{m_{TEF}} = \begin{cases} \left(\dfrac{\Delta C_m}{\delta_{TEF}}\right) \delta_{TEF} & \alpha_{CALC} \le \alpha_b \\ \left(\dfrac{\Delta C_m}{\delta_{TEF}}\right) \delta_{TEF}\ SF_1 & \alpha_b < \alpha_{CALC} < \alpha_b + \Delta\alpha_{TEF} \\ 0 & \alpha_{CALC} \ge \alpha_b + \Delta\alpha_{TEF} \end{cases}$$

Equations 20 through 24 incorporate leading edge flap effects.

$$20.\quad \alpha_{MAX} = \alpha_b + \left(\frac{\Delta\alpha_{MAX}}{\delta_{LEF}}\right) \delta_{LEF}$$

$$21.\quad SF_2 = \left(1. - \frac{\alpha_{CALC} - \alpha_{MAX}}{\Delta\alpha_{LEF}}\right)$$

$$22.\quad \Delta C_{L_{LEF}} = \begin{cases} \left(\dfrac{\Delta C_{L_o}}{\delta_{LEF}}\right) \delta_{LEF} + \left[\left(\dfrac{\Delta C_{L_{MAX}}}{\delta_{LEF}}\right) - \left(\dfrac{\Delta C_{L_o}}{\delta_{LEF}}\right)\right] \delta_{TEF} \left(\dfrac{\alpha_{CALC}}{\alpha_{MAX}}\right) & \alpha_{CALC} \le \alpha_{MAX} \\ \left(\dfrac{\Delta C_{L_{MAX}}}{\delta_{LEF}}\right) \delta_{LEF}\ SF_2 & \alpha_{MAX} < \alpha_{CALC} < \alpha_{MAX} + \Delta\alpha_{LEF} \\ 0 & \alpha_{CALC} \ge \alpha_{MAX} + \Delta\alpha_{LEF} \end{cases}$$

$$23.\quad \Delta C_{D_{LEF}} = \begin{cases} \left(\dfrac{\Delta C_D}{\delta_{LEF}}\right) |\delta_{LEF}| & \alpha_{CALC} \le \alpha_{MAX} \\ \left(\dfrac{\Delta C_D}{\delta_{LEF}}\right) |\delta_{LEF}| SF_2 & \alpha_{MAX} < \alpha_{CALC} < \alpha_{MAX} + \Delta\alpha_{LEF} \\ 0 & \alpha_{CALC} \ge \alpha_{MAX} + \Delta\alpha_{LEF} \end{cases}$$

$$24.\quad \Delta C_{m_{LEF}} = \begin{cases} \left(\frac{\Delta C_m}{\delta_{LEF}}\right) \delta_{LEF} & \alpha_{CALC} \le \alpha_{MAX} \\ \left(\frac{\Delta C_m}{\delta_{LEF}}\right) \delta_{LEF} SF_2 & \alpha_{MAX} < \alpha_{CALC} < \alpha_{MAX} + \Delta\alpha_{LEF} \\ 0 & \alpha_{CALC} \ge \alpha_{MAX} + \Delta\alpha_{LEF} \end{cases}$$

$$25.\quad C_{L_{TOT}} = \begin{cases} C_L' + \Delta C_{L_{TEF}} + \Delta C_{L_{LEF}} & 0<\alpha_S \le \frac{\pi}{2} \ \underline{\text{or}} \ -\pi \le \alpha_S \le -\frac{\pi}{2} \\ -C_L' + \Delta C_{L_{TEF}} + \Delta C_{L_{LEF}} & \alpha_S \ge \frac{\pi}{2} \ \underline{\text{or}} \ -\frac{\pi}{2} < \alpha_S \le 0 \end{cases}$$

$$26.\quad C_{D_{TOT}} = C_D' + \Delta C_{D_{TEF}} + \Delta C_{D_{LEF}}$$

$$27.\quad C_m = \Delta C_{m_{TEF}} + \Delta C_{m_{LEF}}$$

$$28.\quad \alpha_i = C_{L_{TOT}} / \left[\pi \ AR_e \ e\right]$$

$$29.\quad C_L = C_{L_{TOT}} \cos \alpha_i - C_{D_{TOT}} \sin \alpha_i$$

$$30.\quad C_D = \left| C_{D_{TOT}} \cos \alpha_i + C_{L_{TOT}} \sin \alpha_i \right|$$

Equations 14, 27, 29, and 30 represent the quantities passed back to the aerodynamic force and moment equations. In the symbology of Sections 2.0.1.1, 2.0.1.2, and 2.0.1.3, these quantities are equivalent to the following:

$\Delta X_{CP} = f_{\Delta X}(\delta_{LEF}, \delta_{TEF}, \alpha_S,$ aero constants)

$C_L = f_L(\delta_{LEF}, \delta_{TEF}, \alpha_S,$ aero constants)

$C_D = f_D(\delta_{LEF}, \delta_{TEF}, \alpha_S,$ aero constants)

$C_m = f_m(\delta_{LEF}, \delta_{TEF}, \alpha_S,$ aero constants)

<u>Constants</u>: $\Lambda_{\frac{1}{4}}$, λ, AR, AR_e, a_o, Λ_{LE}, α_b, S_2, S, CP_1, CP_2, CP_3, C_{D_o}, d/b,

$$\Delta\alpha_{TEF}, \left(\frac{\Delta C_{L_o}}{\delta_{TEF}}\right), \left(\frac{\Delta C_{L_{MAX}}}{\delta_{TEF}}\right), \left(\frac{\Delta C_D}{\delta_{TEF}}\right), \left(\frac{\Delta C_m}{\delta_{TEF}}\right), \Delta\alpha_{LEF},$$

$$\left(\frac{\Delta\alpha_{MAX}}{\delta_{LEF}}\right), \left(\frac{\Delta C_{L_o}}{\delta_{LEF}}\right), \left(\frac{\Delta C_{L_{MAX}}}{\delta_{LEF}}\right), \left(\frac{\Delta C_D}{\delta_{LEF}}\right), \left(\frac{\Delta C_m}{\delta_{LEF}}\right), C_{L_{MAX}}$$

<u>Inputs</u>: α_S, δ_{TEF}, δ_{LEF}

<u>Outputs</u>: C_L, C_D, C_m, ΔX_{CP}

2.0.1.5 Fuselage Forces and Moments

1. $\alpha_{F_Y} = \tan^{-1}(-v_{AS}/w_{AS})$

2. $\alpha_{F_T} = \tan^{-1}(\sqrt{v_{AS}^2 + w_{AS}^2}/u_{AS})$

3. $\bar{q}_{xy} = 0.5\,\rho(u_{AS}^2 + v_{AS}^2)$

4. $\bar{q}_{xz} = 0.5\,\rho(u_{AS}^2 + w_{AS}^2)$

5. $(A/q) = (A/q)_{MAX}\,\mathrm{sgn}(1., \cos\alpha_{F_T})\,|\cos\alpha_{F_T}|^{n_1}$

6. $A_F = \bar{q}\,(A/q)$

7. $$(S/q) = \begin{cases} \dfrac{\alpha_{F_Y}(18)}{\pi}\,(S/q)_{MAX}\left|\sin\dfrac{\pi}{18}\right|^{n_2} & |\alpha_{F_Y}| \le \dfrac{\pi}{18} \\ (S/q)_{MAX}\,\mathrm{sgn}(1., \sin\alpha_{F_Y})\,|\sin\alpha_{F_Y}|^{n_2} & |\alpha_{F_Y}| > \dfrac{\pi}{18} \end{cases}$$

8. $S_F = \bar{q}_{xy}\,(S/q)$

9. $$(N_F/q) = \begin{cases} \dfrac{(\alpha - \alpha_{o_F})(18)}{\pi}\,(N_{F/q})_{MAX}\left|\sin\dfrac{\pi}{18}\right|^{n_3} & |\alpha - \alpha_{o_F}| \le \dfrac{\pi}{18} \\ (N_F/q)_{MAX}\,\mathrm{sgn}(1., \sin(\alpha - \alpha_{o_F}))\,|\sin(\alpha - \alpha_{o_F})|^{n_3} & |\alpha - \alpha_{o_F}| > \dfrac{\pi}{18} \end{cases}$$

10. $N_F = \bar{q}_{xz}\,(N_F/q)$

$$
11.\quad (M/q) = \begin{cases}
(M/q)_{MAX_1} \dfrac{\alpha-\alpha_{o_F}}{\pi} \quad (18)\ \mathrm{sgn}\left[1.,\ \sin \dfrac{\pi^2}{18(\alpha_{1_F}-\alpha_{o_F})}\right] X & \\
\left|\sin \dfrac{\pi^2}{18(\alpha_{1_F}-\alpha_{o_F})}\right|^{n_4} & -\dfrac{\pi}{18} + \alpha_{o_F} < \alpha < \dfrac{\pi}{18} + \alpha_{o_F} \\
(M/q)_{MAX_1}\ \mathrm{sgn}\left[1.,\ \sin \dfrac{\pi(\alpha-\alpha_{o_F})}{\alpha_{1_F}-\alpha_{o_F}}\right] \left|\sin \dfrac{\pi(\alpha-\alpha_{o_F})}{\alpha_{1_F}-\alpha_{o_F}}\right|^{n_4} & \\
 & 2\alpha_{o_F} - \alpha_{1_F} \le \alpha \le -\dfrac{\pi}{18} + \alpha_{o_F} \\
 & \dfrac{\pi}{18} + \alpha_{o_F} \le \alpha \le \alpha_{1_F} \\
(M/q)_{MAX_2}\ \mathrm{sgn}\left[1.,\ \sin \dfrac{\pi(\alpha-\alpha_{1_F})}{\pi+\alpha_{o_F}-\alpha_{1_F}}\right] \left|\sin \dfrac{\pi(\alpha-\alpha_{1_F})}{\pi+\alpha_{o_F}-\alpha_{1_F}}\right|^{n_5} & \\
 & -\pi \le \alpha \le 2\alpha_{o_F} - \alpha_{1_F} \\
 & \alpha_{1_F} \le \alpha \le \pi
\end{cases}
$$

$$
12.\quad M = \bar{q}_{xz}(M/q)
$$

$$
13.\quad (N/q) = \begin{cases}
(N/q)_{MAX_1} \dfrac{\alpha_{F_Y}}{\pi} \quad (18)\ \mathrm{sgn}\left[1.,\ \sin \dfrac{\pi^2}{18\alpha_{2_F}}\right] X & \\
\left|\sin \dfrac{\pi^2}{18\alpha_{2_F}}\right|^{n_6} & -\dfrac{\pi}{18} < \alpha_{F_Y} < \dfrac{\pi}{18} \\
(N/q)_{MAX_1}\ \mathrm{sgn}\left[1.,\ \sin \dfrac{\pi\alpha_{F_Y}}{\alpha_{2_F}}\right] \left|\sin \dfrac{\pi\alpha_{F_Y}}{\alpha_{2_F}}\right|^{n_6} & -\alpha_{2_F} \le \alpha_{F_Y} \le -\dfrac{\pi}{18} \\
 & \dfrac{\pi}{18} \le \alpha_{F_Y} \le \alpha_{2_F} \\
(N/q)_{MAX_2}\ \mathrm{sgn}\left[1.,\ \sin \dfrac{\pi(\alpha_{F_Y} - \alpha_{2_F})}{\pi - \alpha_{2_F}}\right] X & \\
\dfrac{\left|\sin \pi(\alpha_{F_Y} - \alpha_{2_F})\right|^{n_7}}{(\pi - \alpha_{2_F})} & -\pi \le \alpha_{F_Y} \le -\alpha_{2_F} \\
 & \alpha_{2_F} \le \alpha_{F_Y} \le \pi
\end{cases}
$$

14. $N = \bar{q}_{xy}(N/q)$

15. $$\Delta FS_F = \begin{cases} 0 & |\alpha| \le A_{FS_1} \\ (|\alpha| - A_{FS_1})\Delta FS_{F_o}/(A_{FS_2} - A_{FS_1}) & |\alpha| > A_{FS_1} \\ \Delta FS_{F_o} & |\Delta FS_F| \ge |\Delta FS_{F_o}| \end{cases}$$

16. $X_F = FS_{CG} - FS_F$

17. $Y_F = BL_F - BL_{CG}$

18. $Z_F = WL_{CG} - WL_F$

19. $\Delta X_F = -A_F$

20. $\Delta Y_F = S_F$

21. $\Delta Z_F = -N_F$

22. $\Delta L_F = \Delta Z_F Y_F - \Delta Y_F Z_F$

23. $\Delta M_F = M + \Delta X_F Z_F - \Delta Z_F(X_F - \Delta FS_F)$

24. $\Delta N_F = N + K_{Y_F}\Delta Y_F(X_F - \Delta FS_F) - \Delta X_F Y_F$

<u>Constants</u>: $(A/q)_{MAX}$, $(S/q)_{MAX}$, $(N_F/q)_{MAX}$, $(M/q)_{MAX_1}$, $(M/q)_{MAX_2}$, $(N/q)_{MAX_1}$, $(N/q)_{MAX_2}$, n_1, n_2, n_3, n_4, n_5, n_6, n_7, α_{o_F}, α_{1_F}, α_{2_F}, A_{FS_1}, A_{FS_2}, ΔFS_{F_o}, K_{Y_F}, FS_{CG}, BL_{CG}, WL_{CG}, FS_F, BL_F, WL_F

<u>Inputs</u>: u_{AS}, v_{AS}, w_{AS}, α, ρ

<u>Outputs</u>: ΔX_F, ΔY_F, ΔZ_F, ΔL_F, ΔM_F, ΔN_F, (Section 2.0.1.6)

2.0.1.6 **Summation of Aerodynamic Forces and Moment**

1. $X_{AERO} = \Delta X_W + \Delta X_H + \Delta X_V + \Delta X_F$

2. $Y_{AERO} = \Delta Y_W + \Delta Y_H + \Delta Y_V + \Delta Y_F$

3. $Z_{AERO} = \Delta Z_W + \Delta Z_H + \Delta Z_V + \Delta Z_F$

4. $L_{AERO} = \Delta L_W + \Delta L_H + \Delta L_V + \Delta L_F$

5. $M_{AERO} = \Delta M_W + \Delta M_H + \Delta M_V + \Delta M_F$

6. $N_{AERO} = \Delta N_W + \Delta N_H + \Delta N_V + \Delta N_F$

<u>Inputs</u>: ΔX_W, ΔY_W, ΔZ_W, ΔL_W, ΔM_W, ΔN_W (Section 2.0.1.1)

ΔX_H, ΔY_H, ΔZ_H, ΔL_H, ΔM_H, ΔN_H (Section 2.0.1.2)

ΔX_V, ΔY_V, ΔZ_V, ΔL_V, ΔM_V, ΔN_V (Section 2.0.1.3)

ΔX_F, ΔY_F, ΔZ_F, ΔL_F, ΔM_F, ΔN_F (Section 2.0.1.5)

<u>Outputs</u>: X_{AERO}, Y_{AERO}, Z_{AERO}, L_{AERO}, M_{AERO}, N_{AERO} (Section 2.0)

2.0.2 Direct Thrust Forces and Moments

Equations 1 through 12 in this section apply to each engine by appropriate changes in constants. The equations are written in DO loop format with index (I) = 1, 2, etc to number of engines. Equations 1 to 3 require solution only once per run.

1. $X_T(I) = FS_{CG} - FS_{SW}(I)$

2. $Y_T(I) = BL_{SW}(I) - BL_{CG}$

3. $Z_T(I) = WL_{CG} - WL_{SW}(I)$

4. $\Delta FS_{SW}(I) = \ell_{NOZ} \left[\cos(\psi_T(I))\cos\sigma_y \cos(\theta_T(I)) - \sin(\theta_T(I))\sin\sigma_y\right]$

5. $\Delta BL_{SW}(I) = -\ell_{NOZ} \left[\sin(\psi_T(I))\cos(\theta_T(I))\right.$

6. $\Delta WL_{SW}(I) = -\ell_{NOZ} \left[\cos\sigma_y \sin(\theta_T(I)) + \cos(\theta_T(I)\sin\sigma_y \cos(\psi_T(I))\right.$

7. $A_{FT}(I) = \cos^{-1}\left[\cos(\theta_T(I))\cos(\psi_T(I))\right]$

8. $K_{A_{FT}} = K_{A_{FT1}} A_{FT}(I) + K_{A_{FT2}}$

9. $T_{COR}(I) = K_{A_{FT}} T_{APPL}(I)$

10. $\Delta X(I) = T_{COR}(I) \left[\cos(\theta_T(I))\cos(\psi_T(I))\cos\sigma_y - \sin(\theta_T(I))\sin\sigma_y\right]$

11. $\Delta Y(I) = T_{COR}(I) \left[\cos(\theta_T(I))\sin(\psi_T(I))\right]$

12. $\Delta Z(I) = T_{COR}(I) \left[-\cos(\theta_T(I))\cos(\psi_T(I))\sin\sigma_y - \sin(\theta_T(I))\cos\sigma_y\right.$

13. $X_{TRST} = \sum_{I=1}^{n_{eng}} \Delta X(I)$

14. $Y_{TRST} = \sum_{I=1}^{n_{eng}} \Delta Y(I)$

15. $Z_{TRST} = \sum_{I=1}^{n_{eng}} \Delta Z(I)$

16. $L_{TRST} = \sum_{I=1}^{n_{eng}} \Delta Z(I) \left[Y_T(I) + \Delta BL_{SW}(I)\right] - \Delta Y(I) \left[Z_T(I) - \Delta WL_{SW}(I)\right]$

17. $M_{TRST} = \sum_{I=1}^{n_{eng}} \Delta X(I) \left[Z_T(I) - \Delta WL_{SW}(I)\right] - \Delta Z(I) \left[X_T(I) - \Delta FS_{SW}(I)\right]$

18. $N_{TRST} = \sum_{I=1}^{n_{eng}} \Delta Y(I) \left[X_T(I) - \Delta FS_{SW}(I)\right] - \Delta X(I) \left[Y_T(I) + \Delta BL_{SW}(I)\right]$

<u>Constants</u>: FS_{CG}, BL_{CG}, WL_{CG}, $FS_{SW}(I)$, $BL_{SW}(I)$, $WL_{SW}(I)$, ℓ_{NOZ}, σ_y

$K_{A_{FT1}}$, $K_{A_{FT2}}$, n_{eng}

<u>Inputs</u>: $\psi_T(I)$, $\theta_T(I)$, $T_{APPL}(I)$

<u>Outputs</u>: X_{TRST}, Y_{TRST}, Z_{TRST}, L_{TRST}, M_{TRST}, N_{TRST} (Section 2.0)

2.0.3 Inlet Ram Forces and Moments

Equations 1 through 23 in this section apply to each engine by appropriate changes in constants. The equations are written in DO loop format with index (I) = 1, 2, etc to number of engines. Equations 1 to 3 require solution only once per run

1. $X_{IN}(I) = FS_{CG} - FS_{IN}(I)$

2. $Y_{IN}(I) = BL_{IN}(I) - BL_{CG}$

3. $Z_{IN}(I) = WL_{CG} - WL_{IN}(I)$

If airspeed (V_A) = 0, skip equations 4 through 17 and set $\Delta X_{R_o}(I)$, $\Delta Y_{R_o}(I)$, and $\Delta Z_{R_o}(I) = 0$.

4. $A_{TURN_o} = \cos^{-1}\left[(u_{AS}\cos\sigma_y - w_{AS}\sin\sigma_y)/V_A\right]$

5. $B_{TURN} = \tan^{-1}\left[v_{AS}/(w_{AS}\cos\sigma_y + u_{AS}\sin\sigma_y)\right]$

6. $V_{IN}(I) = \dot{m}(I)/\left[g\pi\rho r_{IN}^2\right]$

7. $VOV_{IN}(I) = V_A/V_{IN}(I)$

8. $L_{RAM}(I) = f_{R_1}(VOV_{IN}(I), A_{TURN_o})$

9. $\Delta A_{TURN}(I) = f_{R_2}(VOV_{IN}(I), A_{TURN_o})$

10. $\eta_R(I) = f_{R_3}(VOV_{IN}(I), A_{TURN_o})$

11. $A_{TURN}(I) = A_{TURN_o} + \Delta A_{TURN}(I)$

12. $F_{RAM}(I) = -\dot{m}(I)V_A\eta_R(I)/g$

13. $WL_{RAM} = WL_{IN}(I) + 2r_{IN}L_{RAM}(I)\sin\sigma_y$

14. $FS_{RAM} = FS_{IN}(I) - 2r_{IN}L_{RAM}(I)\cos\sigma_y$

15. $\Delta X_{R_o}(I) = F_{RAM}(I)\left[\cos(A_{TURN}(I))\cos\sigma_y + \sin(A_{TURN}(I))\cos(B_{TURN})\sin\sigma_y\right]$

16. $\Delta Y_{R_o}(I) = F_{RAM}(I)\sin(A_{TURN}(I))\sin(B_{TURN})$

17. $\Delta Z_{R_o}(I) = F_{RAM}(I)\left[-\cos(A_{TURN}(I))\sin\sigma_y + \sin(A_{TURN}(I))\cos(B_{TURN})\cos\sigma_y\right]$

18. $u_I = qZ_{IN}(I) - rY_{IN}(I)$

19. $v_I = rX_{IN}(I) - pZ_{IN}(I)$

20. $w_I = pY_{IN}(I) - qX_{IN}(I)$

21. $\Delta X_{R_I}(I) = -\dot{m}(I)u_I/g$

22. $\Delta Y_{R_I}(I) = -\dot{m}(I)v_I/g$

23. $\Delta Z_{R_I}(I) = -\dot{m}(I)w_I/g$

24. $X_{RAM} = \sum_{I=1}^{n_{eng}}\left[\Delta X_{R_o}(I) + \Delta X_{R_I}(I)\right]$

25. $Y_{RAM} = \sum_{I-1}^{n_{eng}}\left[\Delta Y_{R_o}(I) + \Delta Y_{R_I}(I)\right]$

26. $Z_{RAM} = \sum_{I=1}^{n_{eng}} \left[\Delta Z_{R_o}(I) + \Delta Z_{R_I}(I)\right]$

27. $L_{RAM} = \sum_{I=1}^{n_{eng}} \left[\Delta Z_{R_o}(I) Y_{IN}(I) - \Delta Y_{R_o}(I)\left[WL_{CG} - WL_{RAM}\right] + \Delta Z_{R_I}(I) Y_{IN}(I) - \Delta Y_{R_I}(I) Z_{IN}(I)\right]$

28. $M_{RAM} = \sum_{I=1}^{n_{eng}} \left[\Delta X_{R_o}(I)\left[WL_{CG} - WL_{RAM}\right] - \Delta Z_{R_o}(I)\left[FS_{CG} - FS_{RAM}\right] + \Delta X_{R_I}(I) Z_{IN}(I) - \Delta Z_{R_I}(I) X_{IN}(I)\right]$

29. $N_{RAM} = \sum_{I=1}^{n_{eng}} \left[\Delta Y_{R_o}(I)\left[FS_{CG} - FS_{RAM}\right] - \Delta X_{R_o}(I) Y_{IN}(I) + \Delta Y_{R_I}(I) X_{IN}(I) - \Delta X_{R_I}(I) Y_{IN}(I)\right]$

<u>Constants</u>: FS_{CG}, BL_{CG}, WL_{CG}, $FS_{IN}(I)$, $BL_{IN}(I)$, $WL_{IN}(I)$, σ_y, r_{IN}, g, n_{eng}

<u>Inputs</u>: u_{AS}, v_{AS}, w_{AS}, p, q, r, V_A, ρ, $\dot{m}(I)$

<u>Outputs</u>: X_{RAM}, Y_{RAM}, Z_{RAM}, L_{RAM}, M_{RAM}, N_{RAM} (Section 2.0)

$X_{IN}(I)$, $Z_{IN}(I)$ (Section 2.0.5)

2.0.4 Reaction Control System Forces and Moments

Equations 1 through 15 in this section apply to each RCS jet by appropriate changes in constants. The equations are written in DO loop format with index (I) = 1, 2, etc to number of jets. Equations 1 to 4 require solution only once per run. The RCS equations are depicted on figure 2-1.

1. $X_{JET}(I) = FS_{CG} - FS_{JET}(I)$

2. $Y_{JET}(I) = BL_{JET}(I) - BL_{CG}$

3. $Z_{JET}(I) = WL_{CG} - WL_{JET}(I)$

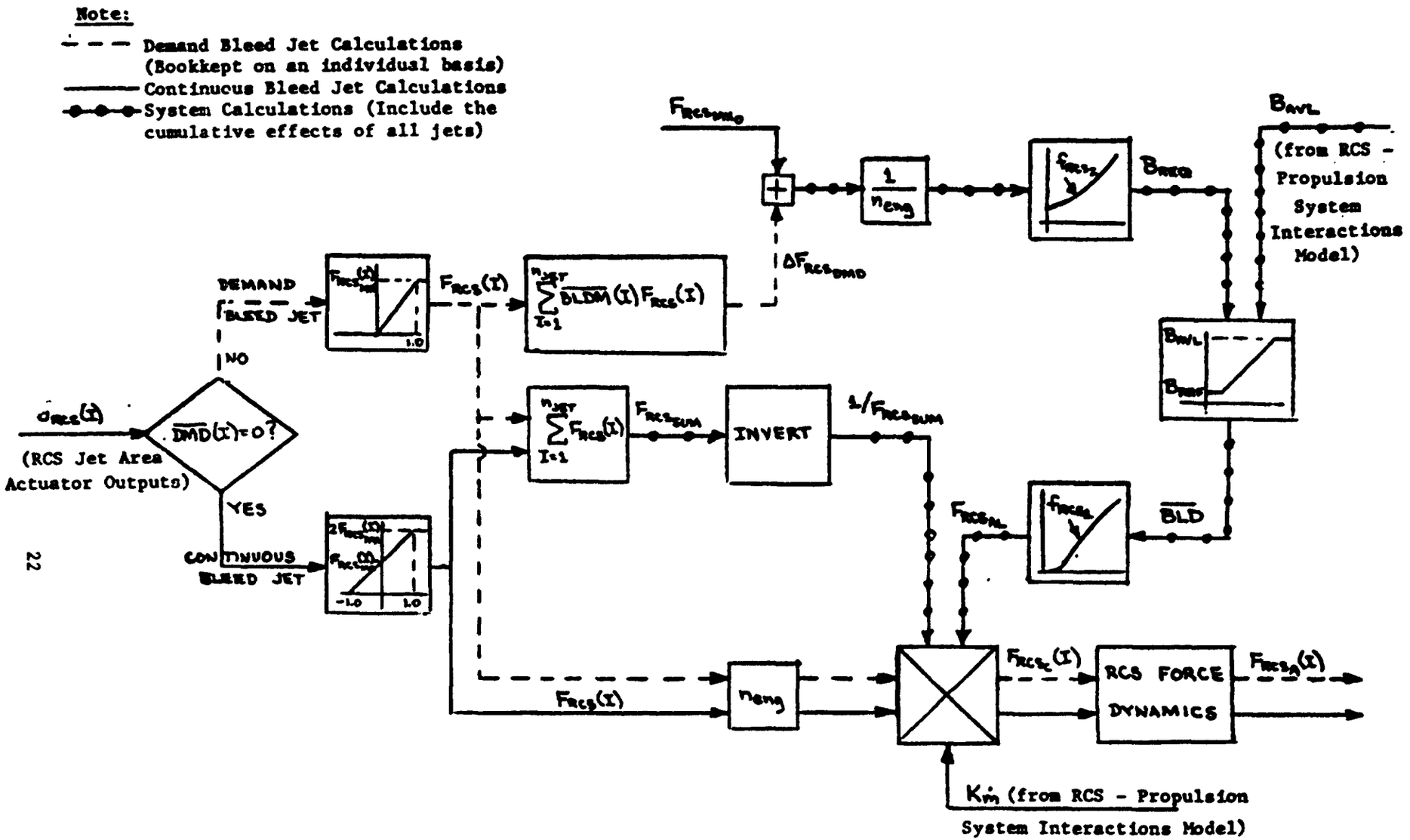

Figure 2-1. Calculation of Individual RCS Jet Forces

4. $$F_{RCS_{MX_o}} = \sum_{I=1}^{n_{JET}} \left|F_{RCS_{MX}}(I)\right| \left[1 - \overline{DMD}(I)\right]$$

5. $$F_{RCS}(I) = \begin{cases} F_{RCS_{MX}}(I)\ \delta_{RCS}(I) & \overline{DMD}(I) = 1.\ \underline{\text{and}}\ F_{RCS}(I) \geq 0. \\ F_{RCS_{MX}}(I)\left[1 + \delta_{RCS}(I)\right] & \overline{DMD}(I) = 0.\ \underline{\text{and}}\ F_{RCS}(I) \geq 0. \\ 0. & F_{RCS}(I) < 0. \end{cases}$$

6. $$F_{RCS_{SUM}} = \sum_{I=1}^{n_{JET}} F_{RCS}(I)$$

7. $$\Delta F_{RCS_{DMD}} = \sum_{I=1}^{n_{JET}} F_{RCS}(I)\ \overline{DMD}(I)\overline{BLDM}(I)$$

8. $$F_{RCS_{LU}} = (F_{RCS_{MX_o}} + \Delta F_{RCS_{DMD}})/n_{eng}$$

9. $$B_{REQ} = \begin{cases} f_{RCS_2}(F_{RCS_{LU}}) & B_{REQ} > B_{REF} \\ B_{REF} & B_{REQ} \leq B_{REF} \end{cases}$$

10. $$F_{RCS_{AL}} = \begin{cases} f_{RCS_1}(B_{AVL}) & B_{REQ} > B_{AVL} \\ F_{RCS_{LU}} & B_{REQ} \leq B_{AVL} \end{cases}$$

11. $$\overline{BLD} = \begin{cases} B_{REQ} & B_{REQ} \leq B_{AVL} \\ B_{AVL} & B_{REQ} > B_{AVL} \end{cases}$$

12. $$F_{RCS_C}(I) = \begin{cases} 0. & F_{RCS_{SUM}} = 0. \\ F_{RCS}(I) K_m \cdot n_{eng} F_{RCS_{AL}} / F_{RCS_{SUM}} & F_{RCS_{SUM}} \neq 0. \end{cases}$$

13. $$\dot{F}_{RCS_A}(I) = \begin{cases} \dot{F}_{RCS_{MAX}}(I) & \dot{F}_{RCS_A}(I) \geq \dot{F}_{RCS_{MAX}}(I) \\ \left[F_{RCS_C}(I) - F_{RCS_A}(I)\right]/\tau_{FRCS}(I) & \dot{F}_{RCS_{MIN}}(I) < \dot{F}_{RCS_A}(I) < \dot{F}_{RCS_{MAX}}(I) \\ \dot{F}_{RCS_{MIN}}(I) & \dot{F}_{RCS_A}(I) \leq \dot{F}_{RCS_{MIN}}(I) \end{cases}$$

14. $$F_{RCS_A}(I) = \begin{cases} F_{RCS_{A_{MAX}}}(I) & F_{RCS_A}(I) \geq F_{RCS_{A_{MAX}}}(I) \\ \int \dot{F}_{RCS_A}(I)dt & F_{RCS_{A_{MIN}}}(I) < F_{RCS_A}(I) < F_{RCS_{A_{MAX}}}(I) \\ F_{RCS_{A_{MIN}}}(I) & F_{RCS_A}(I) \leq F_{RCS_{A_{MIN}}}(I) \end{cases}$$

15. $$\Delta X_{RCS}(I) = F_{RCS_A}(I)\cos(\psi_{JET}(I))\cos(\theta_{JET}(I))$$

16. $$\Delta Y_{RCS}(I) = F_{RCS_A}(I)\sin(\psi_{JET}(I))\cos(\theta_{JET}(I))$$

17. $$\Delta Z_{RCS}(I) = -F_{RCS_A}(I)\sin(\theta_{JET}(I))$$

18. $$X_{RCS} = \sum_{I=1}^{n_{JET}} \Delta X_{RCS}(I)$$

19. $$Y_{RCS} = \sum_{I=1}^{n_{JET}} \Delta Y_{RCS}(I)$$

20. $$Z_{RCS} = \sum_{I=1}^{n_{JET}} \Delta Z_{RCS}(I)$$

21. $$L_{RCS} = \sum_{I=1}^{n_{JET}} \left[\Delta Z_{RCS}(I)Y_{JET}(I) - \Delta Y_{RCS}(I)Z_{JET}(I)\right]$$

22. $$M_{RCS} = \sum_{I=1}^{n_{JET}} \left[\Delta X_{RCS}(I)Z_{JET}(I) - \Delta Z_{RCS}(I)X_{JET}(I)\right]$$

23. $$N_{RCS} = \sum_{I=1}^{n_{JET}} \left[\Delta Y_{RCS}(I)X_{JET}(I) - \Delta X_{RCS}(I)Y_{JET}(I)\right]$$

Constants: FS_{CG}, BL_{CG}, WL_{CG}, $FS_{JET}(I)$, $BL_{JET}(I)$, $WL_{JET}(I)$, B_{REF},

$F_{RCS_{MX}}(I)$, $\overline{DMD}(I)$, $\overline{BLDM}(I)$, $\psi_{JET}(I)$, $\theta_{JET}(I)$, n_{eng}, n_{JET},

$\dot{F}_{RCS_{MAX}}(I)$, $F_{RCS_{MIN}}(I)$, $F_{RCS_{A_{MAX}}}(I)$, $F_{RCS_{A_{MIN}}}(I)$, $\tau_{FRCS}(I)$

Inputs: $\delta_{RCS}(I)$, B_{AVL}, $K_{\dot{m}}$

Outputs: $\overline{BLD}$ (Section 2.1)

X_{RCS}, Y_{RCS}, Z_{RCS}, L_{RCS}, M_{RCS}, N_{RCS} (Section 2.0)

2.0.5 Coriolis Forces and Moments

Equations 1 and 2 in this section apply to each engine by appropriate changes in constants. Equations 1 to 8 are written in DO loop format with index (I) = 1, 2, etc to number of engines.

1. $X_{L_{COR}} = X_{IN}(I)\cos\sigma_y - Z_{IN}(I)\sin\sigma_y$

2. $Z_{L_{COR}} = -X_{IN}(I)\sin\sigma_y - Z_{IN}(I)\cos\sigma_y$

3. $X_{COR} = \sum_{I=1}^{n_{eng}} -2\dot{m}(I)q\ell_{DUCT}\sin\sigma_y/g$

4. $Y_{COR} = \sum_{I=1}^{n_{eng}} 2\dot{m}(I)\ell_{DUCT}(r\cos\sigma_y + p\sin\sigma_y)/g$

5. $Z_{COR} = \sum_{I=1}^{n_{eng}} -2\dot{m}(I)q\ell_{DUCT}\cos\sigma_y/g$

6. $L'_{COR} = \sum_{I=1}^{n_{eng}} -2\dot{m}(I)\ell_{DUCT}\left[Y_{IN}(I)q - Z_{L_{COR}}(r\cos\sigma_y + p\sin\sigma_y)\right]/g$

7. $M_{COR} = \sum_{I=1}^{n_{eng}} \dot{m}(I)q\ell_{DUCT}(2X_{L_{COR}} - \ell_{DUCT})/g$

8. $N'_{COR} = \sum_{I=1}^{n_{eng}} \dot{m}(I)\ell_{DUCT}(2X_{L_{COR}} - \ell_{DUCT})(r\cos\sigma_y + p\sin\sigma_y)/g$

9. $L_{COR} = L'_{COR}\cos\sigma_y + N'_{COR}\sin\sigma_y$

10. $N_{COR} = -L'_{COR} \sin\sigma_y + N'_{COR} \cos\sigma_y$

<u>Constants</u>: σ_y, ℓ_{DUCT}, g

<u>Inputs</u>: $\dot{m}(I)$, $X_{IN}(I)$, $Z_{IN}(I)$, p, q, r

<u>Outputs</u>: X_{COR}, Y_{COR}, Z_{COR}, L_{COR}, M_{COR}, N_{COR} (Section 2.0)

2.1 Propulsion System Equations

Propulsion system dynamics are calculated by the equations in Section 2.1.1 which are depicted on figure 2-2. The equations of Sections 2.1.2, 2.1.3, and 2.1.4 which provide for calculation of inlet mass flow rates, gyroscopic moments, and RCS-propulsion system interactions are depicted on figures 2-1, 2-2, and 2-3.

2.1.1 <u>Thrust Dynamics</u>

1. $K_{BT} = K_{BT_1} B_{REF} + K_{BT_2}$

2. $F_{G_{IDL}} = f_{PS_1}(M_N)$

3. $F_{G_{MIN}} = f_{PS_2}(M_N)$

4. $F_{G_{MAX}} = f_{PS_3}(M_N)$

Note that equations 5 and 6 define thrust commands for a two engine configuration in which differential thrust is employed for yaw control. If another thrust arrangement and/or logic is used, equations 5 and 6 must be modified.

5. $$T_C(1) = \begin{cases} 0.5\, T_{CMD} + K_{T_Y} \delta_{YAW} & T_C(1) > F_{G_{IDL}} \\ F_{G_{IDL}} & T_C(1) \leq F_{G_{IDL}} \end{cases}$$

6. $$T_C(2) = \begin{cases} 0.5\, T_{CMD} - K_{T_Y} \delta_{YAW} & T_C(2) > F_{G_{IDL}} \\ F_{G_{IDL}} & T_C(2) \leq F_{G_{IDL}} \end{cases}$$

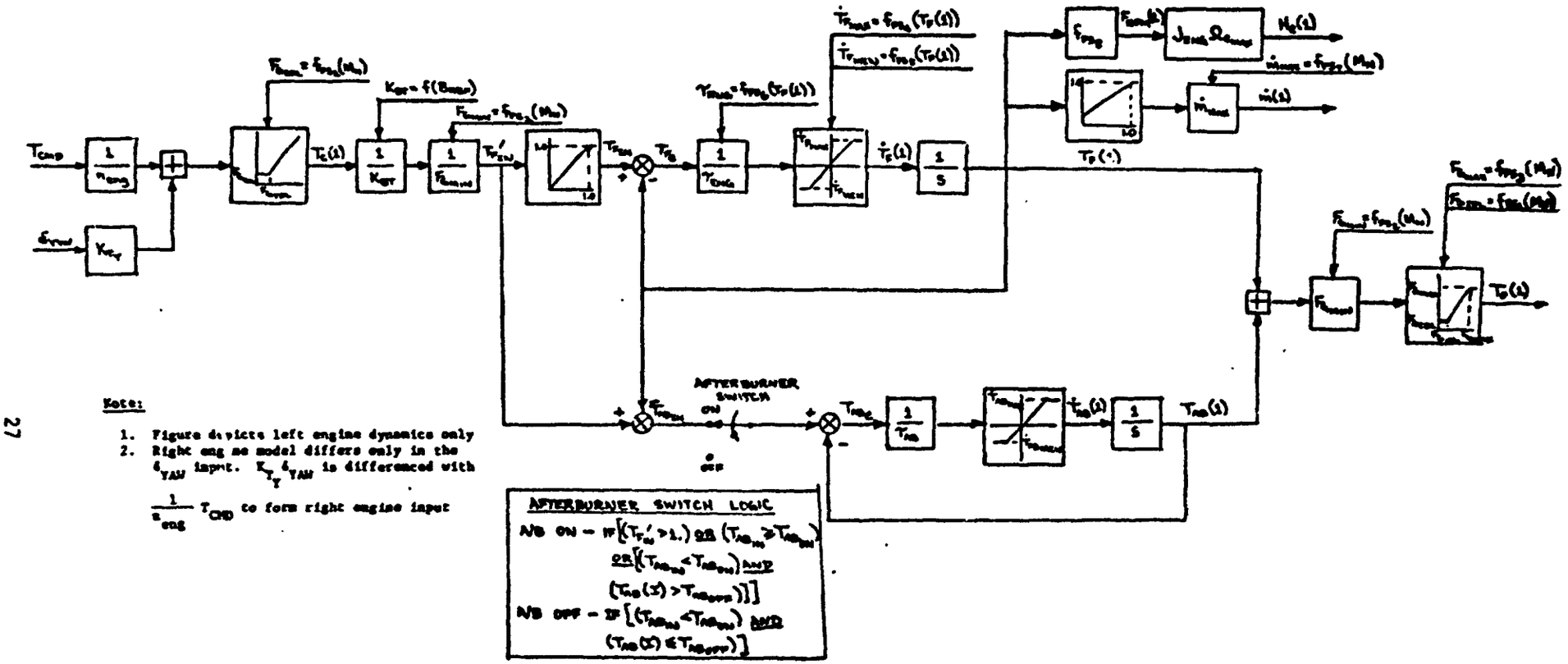

Note:

1. Figure depicts left engine dynamics only
2. Right eng ne model differs only in the δ_{YAW} input. $K_{T_Y}\delta_{YAW}$ is differenced with $\frac{1}{\tau_{eng}} T_{CMD}$ to form right engine input

Figure 2-2. Propulsion System Dynamics and Performance Model

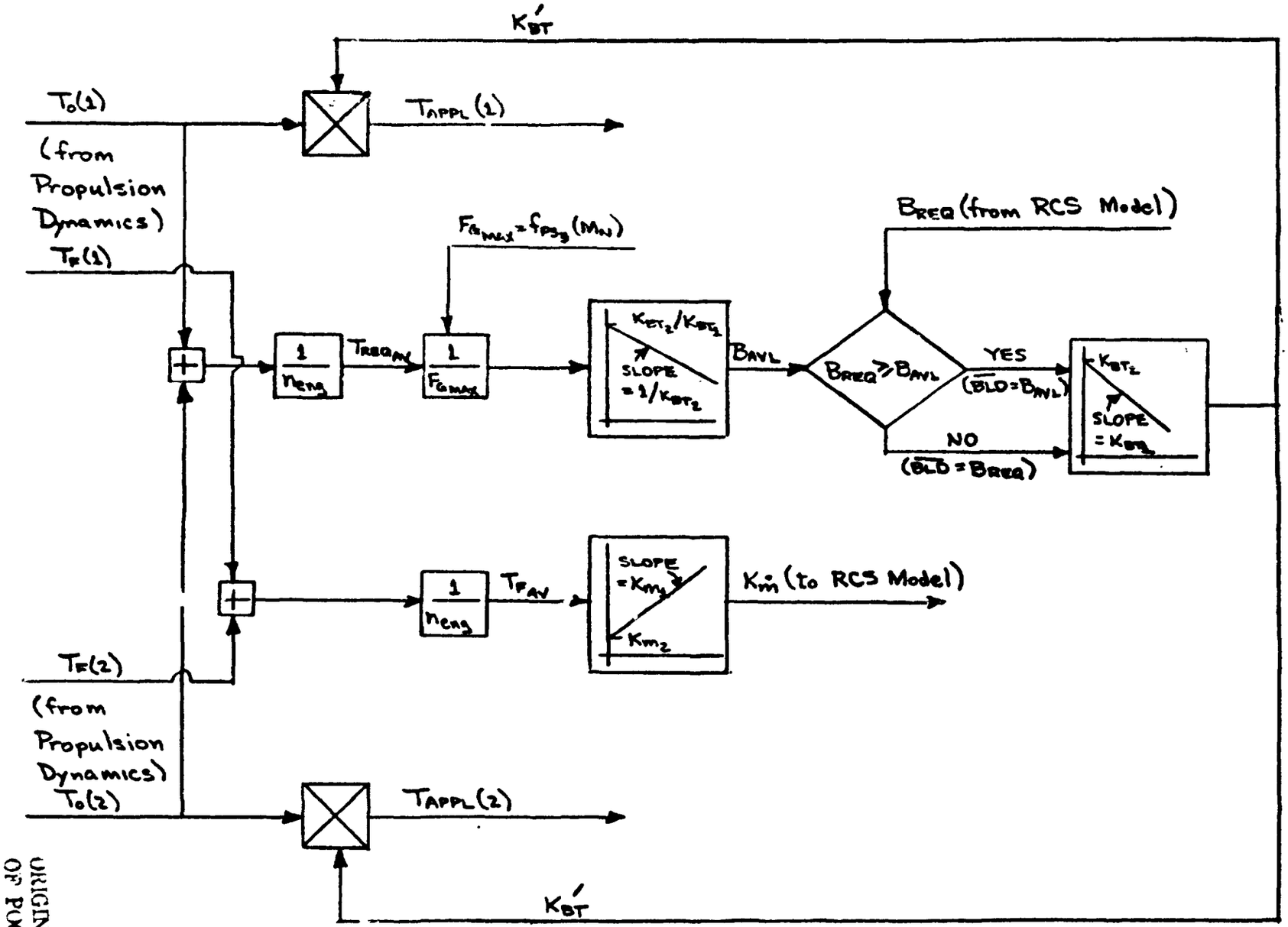

Figure 2-3. RCS-Propulsion System Interactions Model

ORIGINAL PAGE IS OF POOR QUALITY

Equations 7 through 18 apply to each engine by appropriate changes in constants. The equations are written in DO loop format with index (I) = 1, 2, etc to number of engines.

$$7.\quad T_{F_{IN}} = \begin{cases} T_C(I)/(K_{BT}F_{G_{MIN}}) & (F_{G_{IDL}}/F_{G_{MIN}} < T_{F_{IN}} < 1. \\ F_{G_{IDL}}/F_{G_{MIN}} & T_{F_{IN}} \leq (F_{G_{IDL}}/F_{G_{MIN}}) \\ 1. & T_{F_{IN}} > 1. \end{cases}$$

$$8.\quad T_{F_e} = T_{F_{IN}} - T_F(I)$$

$$9.\quad \dot{T}_{F_{MAX}}(I) = f_{PS_4}(T_F(I))$$

$$10.\quad \dot{T}_{F_{MIN}}(I) = f_{PS_5}(T_F(I))$$

$$11.\quad \tau_{ENG}(I) = f_{PS_6}(T_F(I))$$

$$12.\quad \dot{T}_F(I) = \begin{cases} \dot{T}_{F_{MAX}}(I) & \dot{T}_F(I) \geq \dot{T}_{F_{MAX}}(I) \\ T_{F_e}/\tau_{ENG}(I) & \dot{T}_{F_{MIN}}(I) < \dot{T}_F(I) < \dot{T}_{F_{MAX}}(I) \\ \dot{T}_{F_{MIN}}(I) & \dot{T}_F(I) \leq \dot{T}_{F_{MIN}}(I) \end{cases}$$

$$13.\quad T_F(I) = \int \dot{T}_F(I)dt$$

$$14.\quad T_{AB_{IN}} = \begin{cases} T_C(I)/F_{G_{MIN}} - T_F(I) & T_C(I)/F_{G_{MIN}} > 1. \ \underline{\text{or}}\ T_{AB_{IN}} \geq T_{AB_{ON}} \\ 0 & T_{AB_{IN}} < T_{AB_{ON}}\ \underline{\text{and}}\ T_{AB}(I) \leq T_{AB_{OFF}} \end{cases}$$

$$15.\quad T_{AB_e} = T_{AB_{IN}} - T_{AB}(I)$$

$$16.\quad \dot{T}_{AB}(I) = \begin{cases} \dot{T}_{AB_{MAX}} & \dot{T}_{AB}(I) \geq \dot{T}_{AB_{MAX}} \\ T_{AB_e}/\tau_{AB} & \dot{T}_{AB_{MIN}} < \dot{T}_{AB}(I) < \dot{T}_{AB_{MAX}} \\ \dot{T}_{AB_{MIN}} & \dot{T}_{AB}(I) \leq \dot{T}_{AB_{MIN}} \end{cases}$$

$$17.\quad T_{AB}(I) = \int \dot{T}_{AB}(I)dt$$

$$18.\quad T_o(I) = \begin{cases} F_{G_{MAX}} & T_o(I) \geq F_{G_{MAX}} \\ F_{G_{MIN}}\left[T_{AB}(I) + T_F(I)\right] & F_{G_{MIN}} < T_o(I) < F_{G_{MAX}} \\ F_{G_{IDL}} & T_o(I) \leq F_{G_{MIN}} \end{cases}$$

<u>Constants</u>: K_{T_Y}, $\dot{T}_{AB_{MAX}}$, $\dot{T}_{AB_{MIN}}$, τ_{AB}, $T_{AB_{ON}}$, $T_{AB_{OFF}}$, K_{BT_1}, K_{BT_2}

<u>Inputs</u>: T_{CMD}, M_N, δ_{YAW}

<u>Outputs</u>: $T_o(I)$, $T_F(I)$

2.1.2 Inlet Mass Flow Rates

Equation 2 in this section applies to each engine by appropriate changes of variables. The equation is written in DO loop format with index (I) = 1, 2, etc to number of engines.

1. $\dot{m}_{MAX} = f_{PS_7}(M_N)$
2. $\dot{m}(I) = \dot{m}_{MAX}(K_{m_1} T_F(I) + K_{m_2})$

<u>Constants</u>: K_{m_1}, K_{m_2}

<u>Inputs</u>: M_N, $T_F(I)$

<u>Outputs</u>: $\dot{m}(I)$ (Sections 2.0.3, 2.0.5)

2.1.3 Gyroscopic Moments

Equations 1 and 2 in this section apply to each engine by appropriate changes of variables. The equations are written in DO loop format with index (I) = 1, 2 etc to number of engines.

1. $F_{RPM}(I) = f_{PS_8}(T_F(I))$

2. $H_e(I) = J_{ENG} F_{RPM}(I)\ \Omega_{e_{MAX}}$

3. $L_{GYRO} = \sum_{I=1}^{n_{eng}} -H_e(I) q \sin\sigma_y$

4. $M_{GYRO} = \sum_{I=1}^{n_{eng}} H_e(I) \left(r\cos\sigma_y + p \sin \sigma_y\right)$

5. $N_{GYRO} = \sum_{I=1}^{n_{eng}} -H_e(I) q\cos\sigma_y$

Constants: $\Omega_{e_{MAX}}$, J_{ENG}, σ_y

Inputs: $T_F(I)$, p, q, r

Outputs: L_{GYRO}, M_{GYRO}, N_{GYRO}

2.1.4 RCS - Propulsion System Interactions

1. $T_{REQ_{AV}} = \frac{1}{n_{ENG}} \sum_{I=1}^{n_{ENG}} T_o(I)$

2. $B_{AVL} = \begin{cases} 0 & \text{RCS} = 0. \ \underline{\text{or}}\ B_{AVL} \leq 0. \\ \left[T_{REQ_{AV_1}}/F_{G_{MAX}} - K_{BT_2}\right]/K_{BT_1} & \text{RCS} \neq 0. \ \underline{\text{and}}\ B_{AVL} > 0. \end{cases}$

3. $K_m^{\cdot} = \begin{cases} 1. & T_{REQ_{AV}} \geq F_{G_{MIN}} \\ K_{m_1} T_{REQ_{AV}}/F_{G_{MIN}} + K_{m_2} & T_{REQ_{AV}} < F_{G_{MIN}} \end{cases}$

4. $K_{BT}' = K_{BT_1} \overline{BLD} + K_{BT_2}$

Equation 5 is the same for each engine with appropriate changes in variables. The index (I) = 1, 2, etc to number of engines.

5. $T_{APPL}(I) = T_o(I) K_{BT}'$

<u>Constants</u>: n_{eng}, K_{BT_1}, K_{BT_2}, RCS, K_{m_1}, K_{m_2}

<u>Inputs</u>: $T_o(I)$, $\overline{BLD}$

<u>Outputs</u>: B_{AVL}, K_m^* (Section 2.0.4)

$T_{APPL}(I)$ (Section 2.0.2)

2.2 Actuation System Equations

All actuators are modeled by the generic rate and position limited form depicted in figure 2-4. Actuator inputs are defined in Section 2.2.1. Not all the actuators mentioned herein are required for modeling every VATOL concept. Since it is impossible to conceive of every variable which might be combined to form each actuator input, only those inputs and actuators required to model the SF-121 VATOL aircraft are fully specified.

2.2.1 Actuator Inputs

1. Wing Control Surface Deflection

$\delta_{C_{W_C}}(I)$ = Not used in SF-121 application

$$I = \begin{cases} 1 \text{ for left wing} \\ 2 \text{ for right wing} \end{cases}$$

2. Left Wing Trailing Edge Flap Deflection

$$\delta_{e_C} = \begin{cases} \delta_{e_{MAX}} & \delta_{e_C} \geq \delta_{e_{MAX}} \\ K_{\delta_e} \; \delta_{PITCH} & \delta_{e_{MIN}} < \delta_{e_C} < \delta_{e_{MAX}} \\ \delta_{e_{MIN}} & \delta_{e_C} \leq \delta_{e_{MIN}} \end{cases}$$

$$\delta_{a_C} = \begin{cases} \delta_{a_{MAX}} & \delta_{a_C} \geq \delta_{a_{MAX}} \\ K_{\delta_a} \; \delta ROLL & \delta_{a_{MIN}} < \delta_{a_C} < \delta_{a_{MAX}} \\ \delta_{a_{MIN}} & \delta_{a_C} \leq \delta_{a_{MIN}} \end{cases}$$

$$\delta_{TEF_{W_C}}(1) = \delta_{TEF_{W_R}} + \delta_{e_C} - \delta_{a_C}$$

3. Right Wing Trailing Edge Flap Deflection

$$\delta_{TEF_{W_C}}(2) = \delta_{TEF_{W_R}} + \delta_{e_C} + \delta_{a_C}$$

4. Wing Leading Edge Flap Deflection

$$\delta_{LEF_{W_C}}(1) = \delta_{LEF_{W_C}}(2) = K_{LEF_{W1}} \alpha + K_{LEF_{W2}}$$

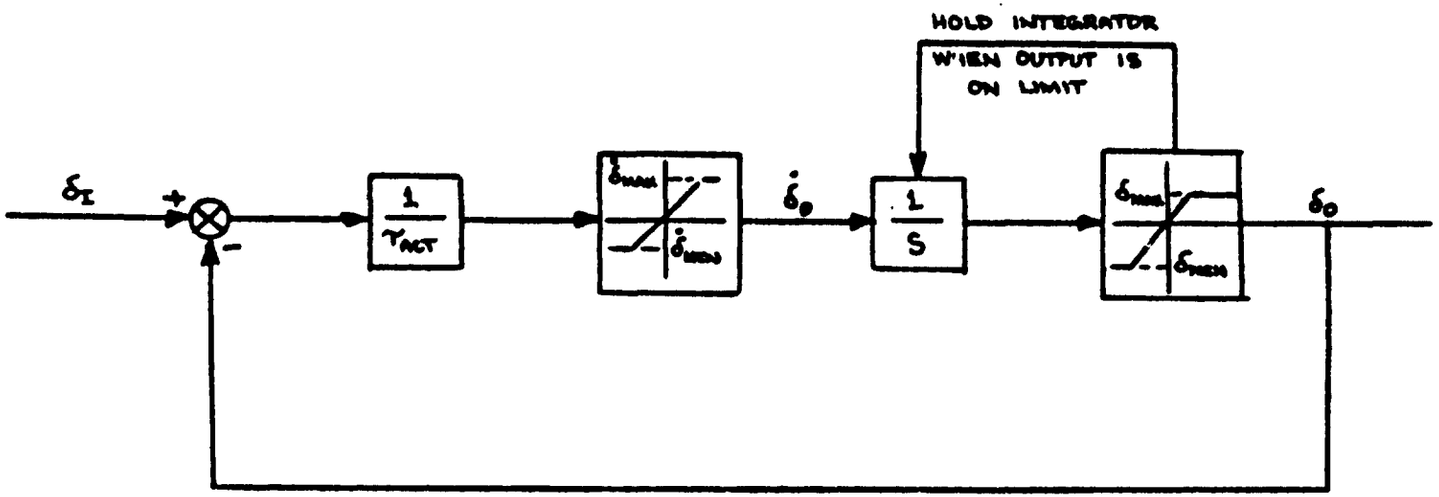

Figure 2-4. Generic Actuator Model

5. Horizontal Tail Control Surface Deflection

$\delta_{C_{H_C}}$ = Not used in SF-121 application

6. Horizontal Tail Trailing Edge Flap Deflection

$\delta_{TEF_{H_C}} = K_{TEF_{H1}} \alpha + K_{TEF_{H2}}$

7. Horizontal Tail Leading Edge Flap Deflection

$\delta_{LEF_{H_C}}$ = Not used in SF-121 application

8. Vertical Tail Control Surface Deflection

$\delta_{C_{V_C}} = K_{\delta_y} \delta_{YAW} + K_{\delta_y \delta_r} \delta_{ROLL} + \delta_{r_{a_y}}$

9. Vertical Tail Trailing Edge Flap Deflection

$\delta_{TEF_{V_C}}$ = Not used in SF-121 application

10. Vertical Tail Leading Edge Flap Deflection

$\delta_{LEF_{V_C}}$ = Not used in SF-121 application

11. RCS Normalized Jet Areas

$\delta_{RCS_C}(1) = -\delta_{ROLL}$

$\delta_{RCS_C}(2) = \delta_{ROLL}$

Only two RCS jets are used in the SF-121 application. The actuator inputs represent normalized jet areas.

12. Pitch Thrust Deflection

$\theta_{T_C}(1) = K_{\theta_T \delta_P} \delta_{PITCH} + K_{\theta_T \delta_r} \delta_{ROLL}$

$\theta_{T_C}(2) = K_{\theta_T \delta_P} \delta_{PITCH} - K_{\theta_T \delta_r} \delta_{ROLL}$

13. Yaw Thrust Deflection

$\psi_{T_C}(1) = K_{\psi_T \delta_y} \delta_{YAW} + K_{\psi_T \delta_r} \delta_{ROLL} + \psi_{T_{REF}}(1)$

$\psi_{T_C}(2) = K_{\psi_T \delta_y} \delta_{YAW} + K_{\psi_T \delta_r} \delta_{ROLL} + \psi_{T_{REF}}(2)$

Constants: $\delta_{TEF_{W_R}}$, K_{δ_p}, K_{δ_r}, $K_{LEF_{W1}}$, $K_{LEF_{W2}}$, $K_{TEF_{H1}}$, $K_{TEF_{H2}}$, K_{δ_y}

$K_{\delta_y \delta_r}$, $K_{\theta_T \delta_p}$, $K_{\theta_T \delta_r}$, $K_{\psi_T \delta_y}$, $K_{\psi_T \delta_r}$, $\psi_{T_{REF}}(I)$, $\delta_{e_{MAX}}$, $\delta_{e_{MIN}}$, $\delta_{a_{MAX}}$,

$\delta_{a_{MIN}}$, K_{δ_e}, K_{δ_a}

Inputs: δ_{PITCH}, δ_{ROLL}, δ_{YAW}, α, $\delta_{r_{a_y}}$

Outputs: $\delta_{C_{W_C}}(I)$, $\delta_{TEF_{W_C}}(1)$, $\delta_{TEF_{W_C}}(2)$, $\delta_{LEF_{W_C}}(1)$, $\delta_{LEF_{W_C}}(2)$, $\delta_{C_{H_C}}$,

$\delta_{TEF_{H_C}}$, $\delta_{LEF_{H_C}}$, $\delta_{C_{V_C}}$ $\delta_{TEF_{V_C}}$, $\delta_{LEF_{V_C}}$, $\delta_{RCS_C}(1)$, $\delta_{RCS_C}(2)$,

$\theta_{T_C}(1)$, $\theta_{T_C}(2)$, $\psi_{T_C}(1)$, $\psi_{T_C}(2)$

2.2.2 Actuator Dynamics

The actuators are all rate and position limited as indicated on figure 2-4. The general actuator equations are given below.

$$1.\quad \dot{\delta}_o(I) = \begin{cases} \dot{\delta}_{MAX} & \dot{\delta}_o(I) \geq \dot{\delta}_{MAX} \\ \dfrac{1}{\tau_{ACT}}(\delta_I(I) - \delta_o(I)) & \dot{\delta}_{MIN} < \dot{\delta}_o(I) < \dot{\delta}_{MAX} \\ \dot{\delta}_{MIN} & \dot{\delta}_o(I) \leq \dot{\delta}_{MIN} \end{cases}$$

$$2.\quad \delta_o(I) = \begin{cases} \delta_{MAX} & \delta_o(I) \geq \delta_{MAX} \\ \int \dot{\delta}_o(I)\, dt & \delta_{MIN} < \delta_o(I) < \delta_{MAX} \\ \delta_{MIN} & \delta_o(I) \leq \delta_{MIN} \end{cases}$$

I = 1, 2, etc. to number of actuators. τ_{ACT}, $\dot{\delta}_{MAX}$, $\dot{\delta}_{MIN}$, δ_{MAX}, and δ_{MIN} are defined for each SF-121 actuator in Section 3.7.

2.3 Flight Control System Equations

The flight control system defined herein (figures 2-5, 2-6, 2-7 and 2-8) is specialized to VATOL aircraft conversion, reconversion, and hover flight. The rationale for the various control options is discussed in Volume I of this report. A brief resume of these options follows:

Cockpit manipulator inputs to the system include:

- longitudinal stick deflection (δ_{LNGSTK})
- lateral stick deflection (δ_{LATSTK})
- pedal deflection (δ_{PED})
- manual throttle (δ_{THROT})
- heave rate command lever (δ_{HEAVE})

The pedals and stick deflections can be manually trimmed. By appropriate gain changes the system can provide attitude and/or rate augmentation in roll, yaw and pitch degrees of freedom and rate augmentation in heave. Body axis rates and integrals of these rates provide the rate and attitude feedbacks in roll, pitch, and yaw while inertial altitude rate ($\dot{z}_e$) provides the rate feedback in heave. Also by appropriate gain changes the stick and pedal inputs can be shaped to provide attitude command, rate command-attitude hold, or (by nulling attitude feedbacks) rate command functions. With the exception of the lateral acceleration to rudder feedback which is programmed as a function of dynamic pressure, system gains are programmed as a function of pitch angle. Control system type and lateral stick and pedal functions can be switched at a user-selected pitch angle. For example, in the baseline SF-121 control system as pitch angle increases beyond 55 degrees, the heave axis changes from no augmentation to heave augmentation, the pitch and yaw axes change from rate command-attitude hold to attitude command, and the lateral stick and pedals reverse command roles.

2.3.1 Control System Function Switch

$$1.\quad CS_{SW} = \begin{cases} 0. & V_A > V_{A_{SW}} \\ 1. & V_A \leq V_{A_{SW}} \end{cases}$$

Constants: $V_{A_{SW}}$

Inputs: V_A

Outputs: CS_{SW}

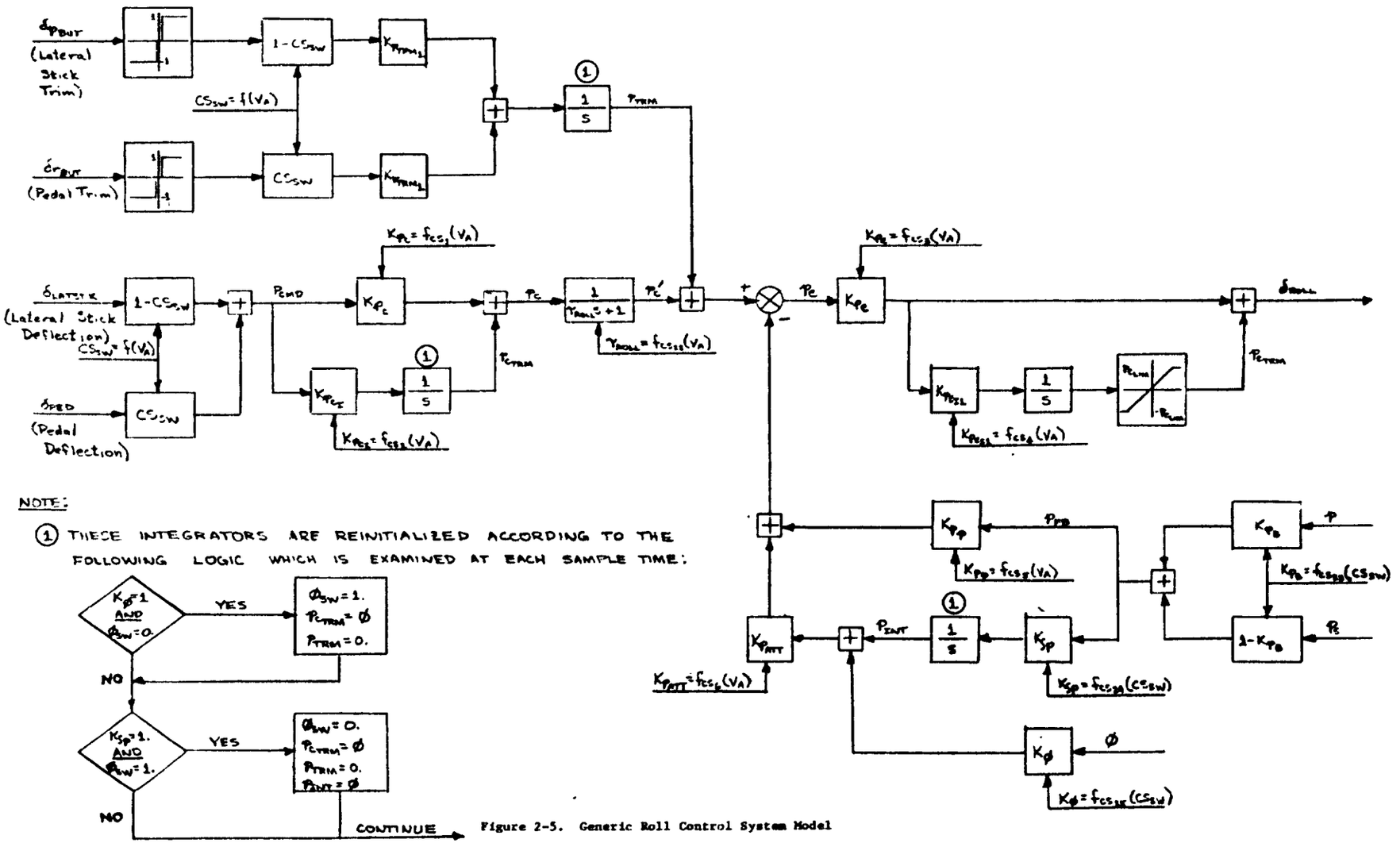

Figure 2-5. Generic Roll Control System Model

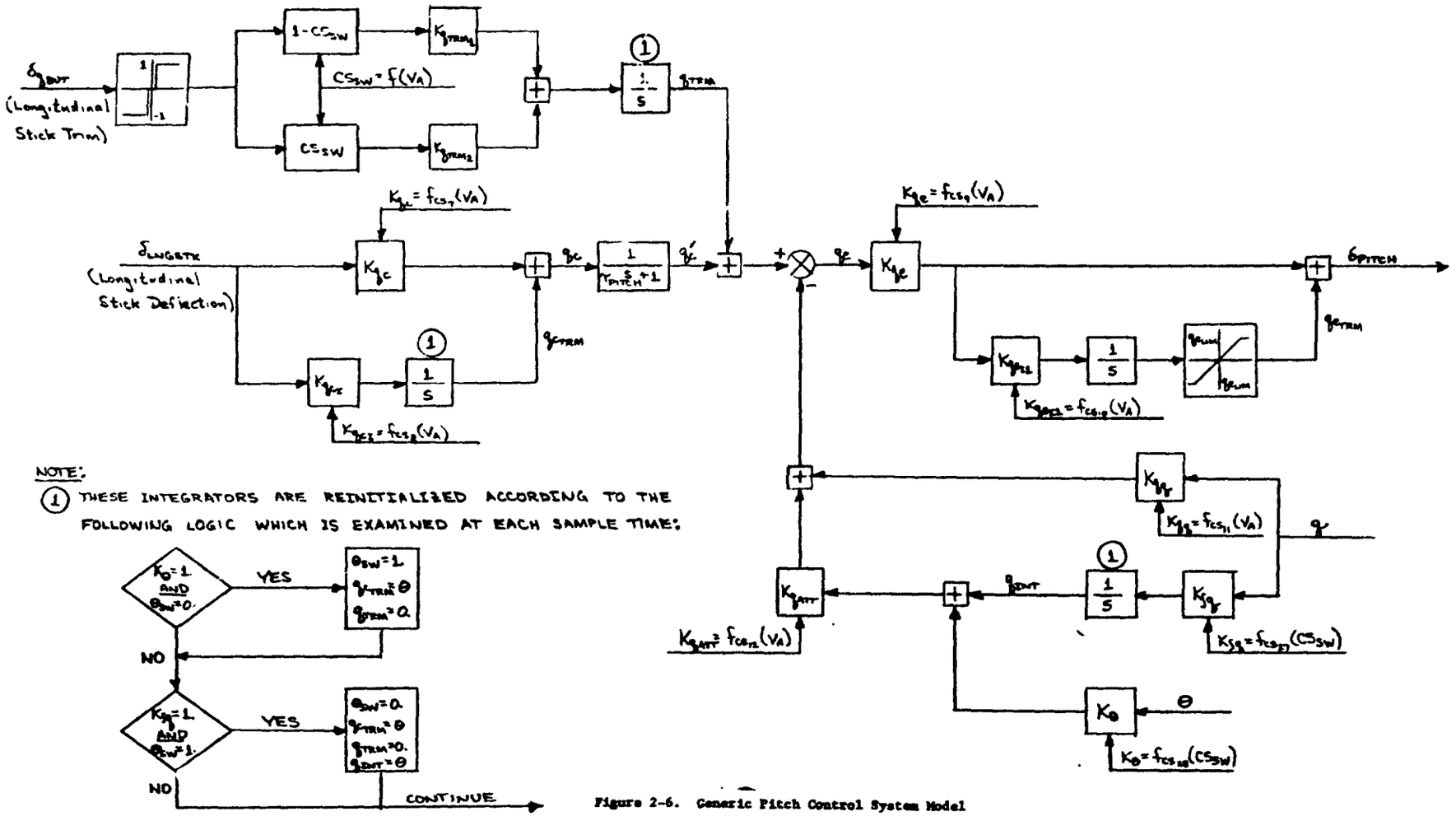

Figure 2-6. Generic Pitch Control System Model

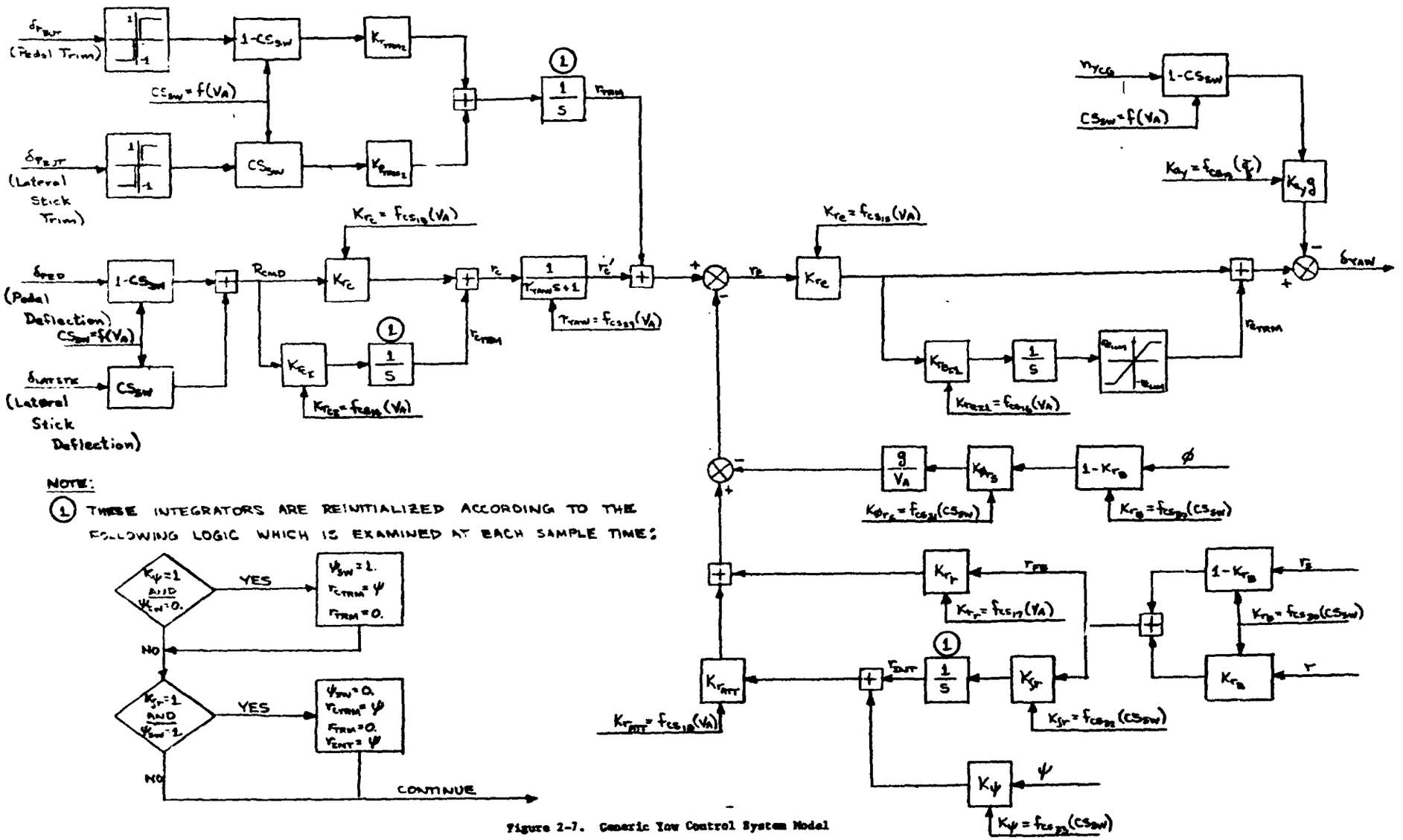

Figure 2-7. Generic Yaw Control System Model

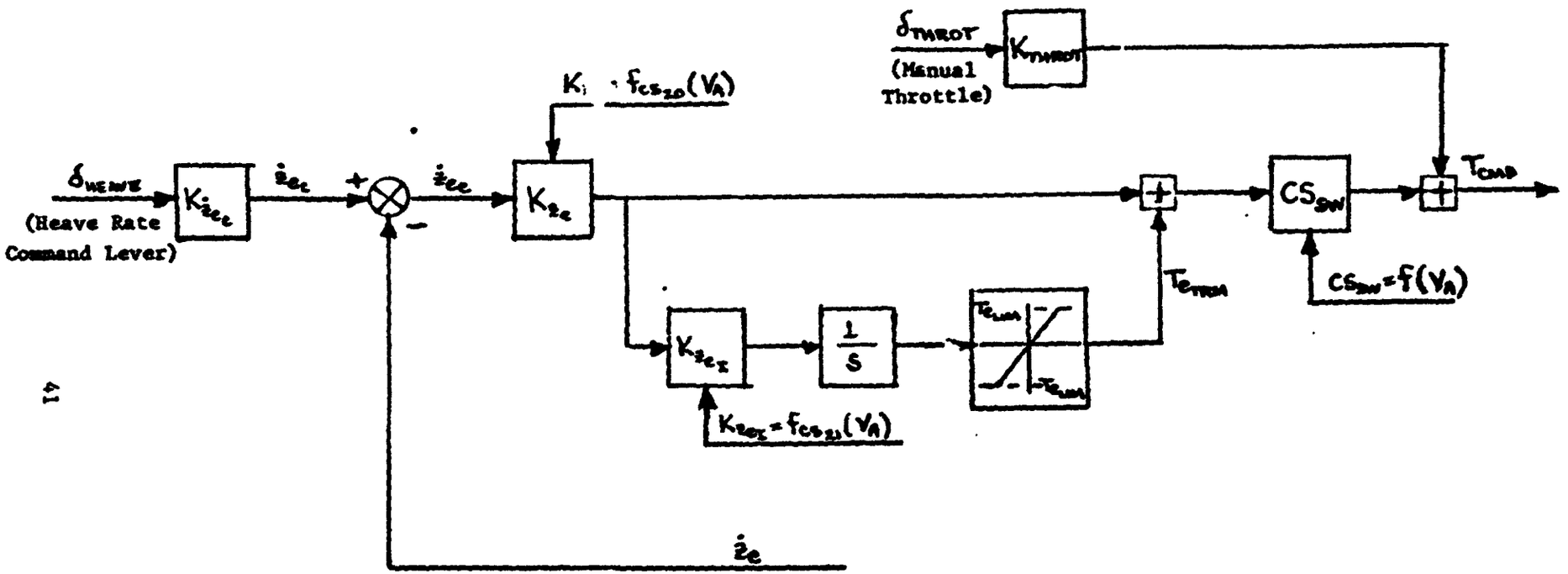

Figure 2-8. Generic Heave Control System Model

ORIGINAL PAGE IS
OF POOR QUALITY

2.3.2 Roll Control System

1. $K_{p_c} = f_{CS_1}(V_A)$

2. $K_{p_{c_I}} = f_{CS_2}(V_A)$

3. $K_{p_e} = f_{CS_3}(V_A)$

4. $K_{p_{e_{I1}}} = f_{CS_4}(V_A)$

5. $K_{p_p} = f_{CS_5}(V_A)$

6. $K_{p_{ATT}} = f_{CS_6}(V_A)$

7. $\tau_{ROLL} = f_{CS_{22}}(V_A)$

8. $K_{p_B} = f_{CS_{23}}(CS_{SW})$

9. $K_{\int p} = f_{CS_{24}}(CS_{SW})$

10. $K_\phi = f_{CS_{25}}(CS_{SW})$

11. $P_{CMD} = (1 - CS_{SW})\,\delta_{LATSTK} + CS_{SW}\,\delta_{PED}$

12. $$\dot{p}_{TRM} = \begin{cases} K_{p_{TRM_1}} \operatorname{sign}(1,\delta_{p_{BUT}})(1-CS_{SW}) + K_{r_{TRM_1}} \operatorname{sign}(1,\delta_{r_{BUT}})CS_{SW} & |\delta_{r_{BUT}}| \ \underline{\text{OR}}\ |\delta_{p_{BUT}}| \geq 0.02 \\ 0. & |\delta_{r_{BUT}}| \ \underline{\text{AND}}\ |\delta_{p_{BUT}}| < 0.02 \end{cases}$$

13. $p_{TRM} = \int \dot{p}_{TRM}\, dt$

14. $\dot{p}_{c_{TRM}} = K_{p_{c_I}} P_{CMD}$

15. $$p_{c_{TRM}} = \begin{cases} \int \dot{p}_{c_{TRM}}\, dt & (K_\phi = 1 \ \underline{\text{AND}}\ \phi_{SW} = 1)\ \underline{\text{OR}}\ (K_{\int p} = 1 \ \underline{\text{AND}}\ \phi_{SW} = 0) \\ \phi & (K_\phi = 1 \ \underline{\text{AND}}\ \phi_{SW} = 0)\ \underline{\text{OR}}\ (K_{\int p} = 1 \ \underline{\text{AND}}\ \phi_{SW} = 1) \end{cases}$$

16. $p_c = p_{c_{TRM}} + K_{p_c} P_{CMD}$

17. $\dot{p}_c' = \begin{cases} (p_c - p_c)/\tau_{ROLL} & \tau_{ROLL} \neq 0 \\ 0 & \tau_{ROLL} = 0 \end{cases}$

18. $p_c' = \begin{cases} \int \dot{p}_c \, dt & \tau_{ROLL} \neq 0 \\ p_c & \tau_{ROLL} = 0 \end{cases}$

19. $p_{FB} = K_{p_B} p + (1 - K_{p_B}) p_s$

20. $p_{INT} = \begin{cases} \int p_{FB} \, dt & (K_{\int p} = 1 \ \underline{\text{AND}} \ \phi_{SW} = 0) \\ \phi & (K_{\int p} = 1 \ \underline{\text{AND}} \ \phi_{SW} = 1) \\ 0 & K_{\int p} = 0 \end{cases}$

21. $p_e = p_c' + P_{TRM} - K_{p_p} p_{FB} - K_{p_{ATT}} (p_{INT} + K_\phi \phi)$

22. $\dot{p}_{e_{TRM}} = K_{p_e} K_{p_{e_{I1}}} p_e$

23. $p_{e_{TRM}} = \begin{cases} p_{e_{LIM}} & p_{e_{TRM}} \geq p_{e_{LIM}} \\ \int \dot{p}_{e_{TRM}} \, dt & -p_{e_{LIM}} < p_{e_{TRM}} < p_{e_{LIM}} \\ -p_{e_{LIM}} & p_{e_{TRM}} \leq -p_{e_{LIM}} \end{cases}$

24. $\delta_{ROLL} = K_{p_e} p_e + p_{e_{TRM}}$

25. Set $\phi_{SW} = 1$ only if ($K_\phi = 1$ <u>AND</u> $\phi_{SW} = 0$). This means that K_ϕ was $\neq 1$ in the previous iteration and became 1 in this iteration.
Set $\phi_{SW} = 0$ only if ($K_{\int p} = 1$ <u>AND</u> $\phi_{SW} = 1$). This means that $K_{\int p}$ was $\neq 1$ in the previous iteration and became 1 in this iteration.
Otherwise ϕ_{SW} is unchanged.

Constants: $p_{e_{LIM}}$, $K_{p_{TRM_1}}$, $K_{r_{TRM_1}}$

Inputs: V_A, CS_{SW}, δ_{LATSTK}, δ_{PED}, p, p_s, ϕ, $\delta_{p_{BUT}}$, $\delta_{r_{BUT}}$

Outputs: δ_{ROLL}

2.3.3 Pitch Control System

1. $K_q = f_{CS_7}(V_A)$
2. $K_{q_{c_I}} = f_{CS_8}(V_A)$
3. $K_{q_e} = f_{CS_9}(V_A)$
4. $K_{q_{e_{I1}}} = f_{CS_{10}}(V_A)$
5. $K_{q_q} = f_{CS_{11}}(V_A)$
6. $K_{q_{ATT}} = f_{CS_{12}}(V_A)$
7. $\tau_{PITCH} = f_{CS_{26}}(V_A)$
8. $K_{\int q} = f_{CS_{27}}(CS_{SW})$
9. $K_\Theta = f_{CS_{28}}(CS_{SW})$
10. $\dot{q}_{TRM} = \begin{cases} K_{q_{TRM_1}} \operatorname{sign}(1,\delta_{q_{BUT}})(1-CS_{SW}) + K_{q_{TRM_2}} \operatorname{sign}(1,\delta_{q_{BUT}}) CS_{SW} & |\delta_{q_{BUT}}| > 0.02 \\ 0. & |\delta_{q_{BUT}}| \leq 0.02 \end{cases}$
11. $q_{TRM} = \int \dot{q}_{TRM}\, dt$
12. $\dot{q}_{c_{TRM}} = K_{q_{c_I}} \delta_{LNGSTK}$
13. $q_{c_{TRM}} = \begin{cases} \int \dot{q}_{c_{TRM}}\, dt & (K_\Theta = 1 \text{ AND } \Theta_{SW} = 1) \text{ OR } (K_{\int q} = 1 \text{ AND } \Theta_{SW} = 0) \\ \Theta & (K_\Theta = 1 \text{ AND } C_{SW} = 0) \text{ OR } (K_{\int q} = 1 \text{ AND } \Theta_{SW} = 1) \end{cases}$
14. $q_c = q_{c_{TRM}} + K_{q_c} \delta_{LNGSTK}$
15. $\dot{q}_c' = \begin{cases} (q_c - q_c')/\tau_{PITCH} & \tau_{PITCH} \neq 0 \\ 0 & \tau_{PITCH} = 0 \end{cases}$
16. $q_c' = \begin{cases} \dot{q}_c'\, dt & \tau_{PITCH} \neq 0 \\ q_c & \tau_{PITCH} = 0 \end{cases}$

17. $$q_{INT} = \begin{cases} \int q\,dt & (K_{\int q} = 1 \ \underline{\text{AND}}\ \theta_{SW} = 0) \\ \theta & (K_{\int q} = 1 \ \underline{\text{AND}}\ \theta_{SW} = 1) \\ 0 & K_{\int q} = 0 \end{cases}$$

18. $$q_e = q_c' + q_{TRM} - K_{q_q} q - K_{q_{ATT}} (q_{INT} + K_\theta \theta)$$

19. $$\dot{q}_{e_{TRM}} = K_{q_e} K_{q_{e_{I1}}} q_e$$

20. $$q_{e_{TRM}} = \begin{cases} q_{e_{LIM}} & q_{e_{TRM}} \geq q_{e_{LIM}} \\ \int \dot{q}_{e_{TRM}}\,dt & -q_{e_{LIM}} < q_{e_{TRM}} < q_{e_{LIM}} \\ -q_{e_{LIM}} & q_{e_{TRM}} \leq -q_{e_{LIM}} \end{cases}$$

21. $$\delta_{PITCH} = K_{q_e} q_e + q_{e_{TRM}}$$

22. Set $\theta_{SW} = 1$ only if ($K_\theta = 1$ <u>AND</u> $\theta_{SW} = 0$). This means that K_θ was $\neq 1$ in the previous iteration and became $= 1$ in this iteration.

    Set $\theta_{SW} = 0$ only if ($K_{\int q} = 1$ <u>AND</u> $\theta_{SW} = 1$). This means that $K_{\int q}$ was $\neq 1$ in the previous iteration and became $= 1$ in this iteration.

    Otherwise θ_{SW} is unchanged.

<u>Constants:</u> $q_{e_{LIM}}$, $K_{q_{TRM_1}}$, $K_{q_{TRM_2}}$

<u>Inputs:</u> V_A, CS_{SW}, δ_{LNGSTK}, $\delta_{q_{BUT}}$, q, θ

<u>Outputs:</u> δ_{PITCH}

2.3.4 Yaw Control System

1. $K_{r_c} = f_{CS_{13}} (V_A)$
2. $K_{r_{c_I}} = f_{CS_{14}} (V_A)$
3. $K_{r_e} = f_{CS_{15}} (V_A)$
4. $K_{r_{e_{I1}}} = f_{CS_{16}} (V_A)$
5. $K_{r_r} = f_{CS_{17}} (V_A)$
6. $K_{r_{ATT}} = f_{CS_{18}} (V_A)$

7. $K_{a_y} = f_{CS_{19}}(\bar{q})$

8. $\tau_{YAW} = f_{CS_{29}}(V_A)$

9. $K_{r_B} = f_{CS_{30}}(CS_{SW})$

10. $K_{\phi_{r_s}} = f_{CS_{31}}(CS_{SW})$

11. $K_{\int r} = f_{CS_{32}}(CS_{SW})$

12. $K_{\Psi} = f_{CS_{33}}(CS_{SW})$

13. $R_{CMD} = (1 - CS_{SW})\,\delta_{PED} + CS_{SW}\,\delta_{LATSTK}$

14. $$\dot{r}_{TRM} = \begin{cases} K_{r_{TRM_2}}\ \mathrm{sign}(1,\delta_{r_{BUT}})(1-CS_{SW}) + K_{p_{TRM_2}}\ \mathrm{sign}(1,\delta_{p_{BUT}})CS_{SW} & |\delta_{r_{BUT}}|\ \underline{\mathrm{OR}}\ |\delta_{p_{BUT}}| \geq 0.02 \\ 0 & |\delta_{r_{BUT}}|\ \underline{\mathrm{AND}}\ |\delta_{p_{BUT}}| < 0.02 \end{cases}$$

15. $r_{TRM} = \int \dot{r}_{TRM}\,dt$

16. $\dot{r}_{c_{TRM}} = K_{r_{c_I}} R_{CMD}$

17. $$r_{c_{TRM}} = \begin{cases} \int \dot{r}_{TRM}\,dt & (K_{\Psi} = 1\ \underline{\mathrm{AND}}\ \Psi_{SW} = 1)\ \underline{\mathrm{OR}}\ (K_{\int r} = 1\ \underline{\mathrm{AND}}\ \Psi_{SW} = 0) \\ \Psi & (K_{\Psi} = 1\ \underline{\mathrm{AND}}\ \Psi_{SW} = 0)\ \underline{\mathrm{OR}}\ (K_{\int r} = 1\ \underline{\mathrm{AND}}\ \Psi_{SW} = 1) \end{cases}$$

18. $r_c = K_{r_c} R_{CMD} + r_{c_{TRM}}$

19. $$\dot{r}_c' = \begin{cases} (r_c - r_c')/\tau_{YAW} & \tau_{YAW} \neq 0 \\ 0 & \tau_{YAW} = 0 \end{cases}$$

20. $$r_c' = \begin{cases} \int \dot{r}_c'\,dt & \tau_{YAW} \neq 0 \\ r_c & \tau_{YAW} = 0 \end{cases}$$

21. $r_{FB} = (1 - K_{r_B})\,r_s + K_{r_B} r$

22. $$r_{INT} = \begin{cases} \int r_{FB}\,dt & (K_{\int r} = 1 \ \underline{\text{AND}}\ \Psi_{SW} = 0) \\ \Psi & (K_{\int r} = 1 \text{ AND } \Psi_{SW} = 1) \\ 0 & K_{\int r} = 0 \end{cases}$$

23. $$r_e = r_{TRM} + r_c' + \left(\frac{g}{V_A}\right) K_{\phi_{r_s}} (1-K_{r_B})\phi - K_{r_r} r_{FB} - K_{r_{ATT}} (r_{INT} + K_\Psi \Psi)$$

24. $$\dot{r}_{e_{TRM}} = K_{r_e} K_{r_{e_{I1}}} r_e$$

25. $$r_{e_{TRM}} = \begin{cases} r_{e_{LIM}} & r_{e_{TRM}} \geq r_{e_{LIM}} \\ \int \dot{r}_{e_{TRM}} & -r_{e_{LIM}} < r_{e_{TRM}} < r_{e_{LIM}} \\ -r_{e_{LIM}} & r_{e_{TRM}} \leq -r_{e_{LIM}} \end{cases}$$

26. $$\delta_{YAW} = r_{e_{TRM}} + K_{r_e} r_e - K_{a_y} g\, n_{y_{CG}}$$

27. $$\delta_{r_{a_y}} = 0$$

28. Set $\Psi_{SW} = 1$ only if ($K_\Psi = 1$ <u>AND</u> $\Psi_{SW} = 0$). This means that K_Ψ was $\neq 1$ in the previous iteration and became = 1 in this iteration.

Set $\Psi_{SW} = 0$ only if ($K_{\int r} = 1$ <u>AND</u> $\Psi_{SW} = 1$). This means that $K_{\int r}$ was $\neq 1$ in the previous iteration and became = 1 in this iteration.

Otherwise Ψ_{SW} is unchanged.

<u>Constants</u>: $r_{e_{LIM}}$, $K_{r_{TRM_2}}$, $K_{p_{TRM_2}}$, g

<u>Inputs</u>: V_A, CS_{SW}, δ_{PED}, δ_{LATSTK}, $\delta_{r_{BUT}}$, $\delta_{p_{BUT}}$, $n_{y_{CG}}$, ϕ, Ψ, r, r_s

<u>Outputs</u>: δ_{YAW}

2.3.5 Heave Control System

1. $\dot{z}_{e_c} = K_{\dot{z}_{e_c}} \delta_{HEAVE}$

2. $K_{z_e} = f_{CS_{20}}(V_A)$

3. $K_{z_{e_I}} = f_{CS_{21}}(V_A)$

4. $\dot{z}_{e_e} = \dot{z}_{e_c} - \dot{z}_e$

5. $\dot{T}_{e_{TRM}} = K_{z_{e_I}} K_{z_e} \dot{z}_{e_e}$

6. $$T_{e_{TRM}} = \begin{cases} T_{e_{LIM}} & T_{e_{TRM}} \geq T_{e_{LIM}} \\ \int \dot{T}_{e_{TRM}} dt & -T_{e_{LIM}} < T_{e_{TRM}} < T_{e_{LIM}} \\ -T_{e_{LIM}} & T_{e_{TRM}} \leq -T_{e_{LIM}} \end{cases}$$

7. $T_{CMD} = (K_{z_e} \dot{z}_{e_e} + T_{e_{TRM}}) CS_{SW} + K_{THROT} \delta_{THROT}$

Constants: $K_{\dot{z}_{e_c}}$, $T_{e_{LIM}}$, K_{THROT}

Inputs: δ_{HEAVE}, $\dot{z}_e$, CS_{SW}, δ_{THROT}, V_A

Outputs: T_{CMD}

2.4 Aircraft Equations of Motion

VATOL aircraft routinely fly through $|\theta| = 90$ deg which is a singular point in the standard body rate to Euler angle rate transformation where $\dot{\phi}$ and $\dot{\psi}$ are not defined. To avoid this singularity the direction cosine transformation between body and inertial axes was implemented. Since this modified form may not be available in the Ames BASIC routines, the equations of motion used in the SF-121 application are given here. Equations 26 through 35 (based on similar relations in reference (a)) correct the direction cosines for integration error to maintain the orthonormality of the transformation.

1. $L'_{TOT} = [(L_{TOT} - L_{GYRO})/I_x + \frac{I_{xz}}{I_x I_z}(N_{TOT} - N_{GYRO})]/(1 - \frac{I_{xz}^2}{I_x I_z})$

2. $N'_{TOT} = [(N_{TOT} - N_{GYRO})/I_z + \frac{I_{xz}}{I_x I_z}(L_{TOT} - L_{GYRO})]/(1 - \frac{I_{xz}^2}{I_x I_z})$

3. $\dot{p} = q[(-\frac{I_{xz}}{I_x}\frac{(I_y - I_x)}{I_z} + \frac{I_{xz}}{I_x})p - (-\frac{I_{xz}^2}{I_x I_z} + \frac{(I_z - I_y)}{I_x})r]/(1 - \frac{I_{xz}^2}{I_x I_z})$

   $+ L'_{TOT}$

4. $p = \int \dot{p}\, dt$

5. $\dot{q} = \frac{I_{xz}}{I_y}(r^2 - p^2) + \frac{(I_z - I_x)}{I_y} pr + (M_{TOT} - M_{GYRO})/I_y$

6. $q = \int \dot{q}\, dt$

7. $\dot{r} = q\,[(-\frac{I_{xz}}{I_z}\frac{(I_z - I_y)}{I_x} - \frac{I_{xz}}{I_z})r + (-\frac{I_{xz}^2}{I_x I_z} - \frac{(I_y - I_x)}{I_z})p]/(1 - \frac{I_{xz}^2}{I_x I_z})$

   $+ N'_{TOT}$

8. $r = \int \dot{r}\, dt$

9. $\dot{d}_{11} = d'_{12}\, r - d'_{13} q$

10. $d_{11} = \int \dot{d}_{11}\, dt$

11. $\dot{d}_{12} = d'_{13}\, p - d'_{11} r$

12. $d_{12} = \int \dot{d}_{12}\, dt$

13. $\dot{d}_{13} = d'_{11}\, q - d'_{12}\, p$

14. $d_{13} = \int \dot{d}_{13}\, dt$

15. $\dot{d}_{21} = d'_{22}\, r - d'_{23}\, q$

16. $d_{21} = \int \dot{d}_{21}\, dt$

17. $\dot{d}_{22} = d'_{23}\, p - d'_{21}\, r$

18. $d_{22} = \int \dot{d}_{22}\, dt$

19. $\dot{d}_{23} = d'_{21}\, q - d'_{22}\, p$

20. $d_{23} = \int \dot{d}_{23}\, dt$

21. $\dot{d}_{31} = d'_{32}\, r - d'_{33}\, q$

22. $d_{31} = \int \dot{d}_{31}\, dt$

23. $\dot{d}_{32} = d'_{33}\, p - d'_{31}\, r$

24. $d_{32} = \int \dot{d}_{32}\, dt$

25. $\dot{d}_{33} = d'_{31}\, q - d'_{32}\, p$

26. $d_{33} = \int \dot{d}_{33}\, dt$

27. $$DC_{MAG} = d_{11}d_{22}d_{33} + d_{12}d_{23}d_{31} + d_{13}d_{32}d_{21} - d_{11}d_{32}d_{23} - d_{12}d_{21}d_{33} - d_{13}d_{22}d_{31} = \begin{vmatrix} d_{11} & d_{12} & d_{13} \\ d_{21} & d_{22} & d_{23} \\ d_{31} & d_{32} & d_{33} \end{vmatrix}$$

28. $d'_{11} = 0.5\,(d_{11} + d_{22}d_{33} - d_{32}d_{23})/DC_{MAG}$

29. $d'_{21} = 0.5\,(d_{21} + d_{32}d_{13} - d_{12}d_{33})/DC_{MAG}$

30. $d'_{31} = 0.5\,(d_{31} + d_{12}d_{23} - d_{22}d_{13})/DC_{MAG}$

31. $d'_{12} = 0.5\,(d_{12} + d_{31}d_{23} - d_{21}d_{33})/DC_{MAG}$

32. $d'_{22} = 0.5\ (d_{22} + d_{11}d_{33} - d_{31}d_{13})/DC_{MAG}$

33. $d'_{32} = 0.5\ (d_{32} + d_{21}d_{13} - d_{11}d_{23})/DC_{MAG}$

34. $d'_{13} = 0.5\ (d_{13} + d_{21}d_{32} - d_{31}d_{22})/DC_{MAG}$

35. $d'_{23} = 0.5\ (d_{23} + d_{31}d_{12} - d_{11}d_{32})/DC_{MAG}$

36. $d'_{33} = 0.5\ (d_{33} + d_{11}d_{22} - d_{21}d_{12})/DC_{MAG}$

37. $\dot{u} = -qw + rv + gd'_{31} + X_{TOT}/m$

38. $u = = \int \dot{u}\ dt$

39. $\dot{v} = -ru + pw + gd'_{32} + Y_{TOT}/m$

40. $v = \int \dot{v}\ dt$

41. $\dot{w} = -pv + qu + gd'_{33} + Z_{TOT}/m$

42. $\dot{x}_e = d'_{11}u + d'_{12}v + d'_{13}\ w$

43. $x_e = \int \dot{x}_e\ dt$

44. $\dot{y}_e = d'_{21}u + d'_{22}v + d'_{23}w$

45. $y_e = \int \dot{y}_e\ dt$

46. $\dot{z}_e = d'_{31}\ u + d'_{32}\ v + d'_{33}\ w$

47. $z_e = \int \dot{z}_e\ dt$

48. $n_{x_{CG}} = \dfrac{X_{TOT}}{m}$

49. $n_{y_{CG}} = \dfrac{Y_{TOT}}{m}$

50. $n_{z_{CG}} = -\dfrac{Z_{TOT}}{m}$

51. $p_s = p \cos \alpha + r \sin \alpha$

52. $r_s = -p \sin \alpha + r \cos \alpha$

To track θ, ϕ, and ψ and provide θ for control system gain scheduling, the standard Euler angle rate - body rate relations are implemented with the modification that when $89.999943 \leq |\theta| \leq 90.000057$ deg, $\dot{\psi}$ and $\dot{\phi}$ are frozen until θ exceeds these limits:

53. $\dot{\theta} = q \cos \phi - r \sin \phi$

54. $\theta = \int \dot{\theta} dt$

If $89.999943 \leq |\theta| \leq 90.000057$ skip to equation 57.

55. $\dot{\phi} = p + \tan\theta[q \sin\phi + r \cos\phi]$

56. $\dot{\psi} = (r \cos\phi + q \sin\phi) \sec\theta$

57. $\phi = \int \dot{\phi}\, dt$

58. $\psi = \int \dot{\psi}\, dt$

Equations 55 to 58 provide an excellent approximate solution for ϕ and ψ; each time $|\theta|$ enters the 90 ± 0.000057 deg region, error is introduced proportional to the time spent there.

<u>Constants:</u> I_x, I_y, I_z, I_{xz}, g, m

<u>Inputs:</u> X_{TOT}, Y_{TOT}, Z_{TOT}, L_{TOT}, M_{TOT}, N_{TOT}, L_{GYRO}, M_{GYRO}, N_{GYRO}, α

<u>Outputs:</u> u, v, w, p, q, r, θ, $\dot{z}_e$, $n_{y_{CG}}$, p_s, r_s, $\dot{u}$, $\dot{w}$

2.5 Air Data Equations

The equations herein define the air data quantities required to calculate the various forces and moments acting on the vehicle. These relations are available in Ames BASIC routines but are included here for completeness:

1. $u_{AS} = u - u_{AIR}$

2. $v_{AS} = v - v_{AIR}$

3. $w_{AS} = w - w_{AIR}$

4. $V_A = \sqrt{u_{AS}^2 + v_{AS}^2 + w_{AS}^2}$

5. $\alpha = \tan^{-1}(w_{AS}/u_{AS})$

6. $\dot{\alpha} = \begin{cases} 0 & u_{AS}^2 + w_{AS}^2 = 0 \\ (u_{AS}\dot{w} - w_{AS}\dot{u})/(u_{AS}^2 + w_{AS}^2) & u_{AS}^2 + w_{AS}^2 \neq 0 \end{cases}$

7. $\rho = f(z_e)$

8. $V_{SS} = f(z_e)$

9. $M_N = V_A/V_{SS}$

10. $\bar{q} = \rho/2\, V_A^2$

Constants: None

Inputs: u, v, w, $\dot{u}$, $\dot{w}$, z_e

u_{AIR}, v_{AIR}, w_{AIR} are user defined airmass velocities (i.e. steady winds, turbulence)

The functional relations for ρ and V_{SS} are taken from standard atmosphere data.

Outputs: u_{AS}, v_{AS}, w_{AS}, V_A, α, $\dot{\alpha}$, ρ, M_N, $\bar{q}$

3.0 SF-121 Data Base

This section details the data used in the application of the generalized VATOL math model to the Vought SF-121 (Ref (b)) conceptual aircraft.

3.1 Mass Properties

$W = 16375$ lb.

$I_X = 7959$ slug ft^2

$I_Y = 52609$ slug ft^2

$I_Z = 58337$ slug ft^2

$I_{XZ} = -202.4$ slug ft^2

3.2 Geometry Data (all dimensions in ft unless otherwise noted)

1. Reference center of gravity

   $FS_{CG} = 33.46$; $BL_{CG} = 0.$; $WL_{CG} = 8.25$

2. Wing reference center of pressure

   $FS_W(1) = FS_W(2) = 36.67$

   $BL_W(1) = -5.83$; $BL_W(2) = 5.83$

   $WL_W(1) = WL_W(2) = 8.25$

3. Canard (Horizontal Tail) reference center of pressure

   $FS_H = 26.04$; $BL_H = 0$; $WL_H = 9.58$

4. Vertical tail reference center of pressure

   $FS_v = 44.67$; $BL_v = 0$; $WL_v = 13.08$

5. Fuselage reference center of pressure

   $FS_F = 14.50$; $BL_F = 0$; $WL_F = 8.25$

6. Engine inlet locations ($n_{eng} = 2$)

$FS_{IN}(1) = FS_{IN}(2) = 22.17$

$BL_{IN}(1) = -2.75$; $BL_{IN}(2) = 2.75$

$WL_{IN}(1) = WL_{IN}(2) = 8.33$

7. Swiveling nozzle center of rotation

$FS_{SW}(1) = FS_{SW}(2) = 45.92$

$BL_{SW}(1) = -1.85$; $BL_{SW}(2) = 1.85$

$WL_{SW}(1) = WL_{SW}(2) = 8.33$

8. RCS jet locations ($n_{JET} = 2$)

$FS_{JET}(1) = FS_{JET}(2) = 44.5$

$BL_{JET}(1) = -13.33$; $BL_{JET}(2) = 13.33$

$WL_{JET}(1) = WL_{JET}(2) = 8.33$

$\theta_{JET}(1) = \theta_{JET}(2) = -1.5708$ rad.

$\Psi_{JET}(1) = \Psi_{JET}(2) = 0$

3.3 Aerodynamic Data

3.3.1 Lifting Surface Data

Table 3-1 specifies the data required by the generalized aerodynamic equations (Section 2.0.1.4) to calculate the lift, drag, and moment of the wing, canard (horizontal tail), and vertical tail.

Table 3-1 - LIFTING SURFACE AERODYNAMIC DATA

PARAMETER \ SURFACE	WING	HORIZONTAL TAIL	VERTICAL TAIL
AR	2.30	2.25	2.00
AR_e	2.14	0.996	2.00
S - ft	350.	115.8	60.0
S_e - ft	217.2	51.1	60.0
$\Lambda_{1/4}$ - rad	0.709	0.934	0.785
Λ_{LE} - rad	0.873	1.047	0.925
λ	0.15	0.25	0.30
$C_{L_{MAX}}$	1.06	1.12	1.030
α_b - rad	0.593	0.515	0.471
a_o - 1/rad	6.045	6.045	6.045
C_{D_o}	0.00394	0.00281	0.0043
d/b	0.253	0.442	0.179
$(\Delta CL_o/\delta_{TEF})$ - 1/rad	0.974	0.1065	0
$(\Delta C_{L_{MAX}}/\delta_{TEF})$ - 1/rad	0.630	0.1065	0
$(\Delta C_D/\delta_{TEF})$ - 1/rad	0.172	0.0865	0
$(\Delta C_m/\delta_{TEF})$ - 1/rad	-0.343	0.432	0
$(\Delta\alpha_{MAX}/\delta_{LEF})$ - 1/rad	0.091	0	0
$(\Delta C_{L_o}/\delta_{LEF})$ - 1/rad	-0.0859	0	0
$(\Delta C_{L_{MAX}}/\delta_{LEF})$ - 1/rad	0.304	0	0
$(\Delta C_D/\delta_{LEF})$ - 1/rad	0.00602	0	0
$(\Delta C_m/\delta_{LEF})$ - 1/rad	-0.0191	0	0

Table 3-1 - LIFTING SURFACE AERODYNAMIC DATA (continued)

PARAMETER \ SURFACE	WING	HORIZONTAL TAIL	VERTICAL TAIL
$(\Delta\alpha_{LEF})$ - rad	0.525	0	0
$(\Delta\alpha_{TEF})$ - rad	0.873	0.525	0
CP_1	0.571	0.495	0.749
CP_2	0.175	0.727	-0.028
CP_3	0.734	0.800	0.976

3.3.2 Additional Wing Data

To convert the outputs of the generalized aerodynamic equations to wing forces and moments, the following additional wing data are required (See constant list for Section 2.0.1.1):

$K_{\delta_C}(1) = K_{\delta_C}(2) = 0$ (The SF-121 elevons are modeled as trailing edge flaps not as control surfaces which change the wing angle of attack as a function of control deflection)

$i_w(1) = i_w(2) = 0$

$b_w = 28.38$ ft

$c_w = 14.58$ ft

$C_{l_{\beta_o}} = 0$

$C_{l_{\beta_{C_L}}} = -0.235$ 1/rad

$C_{l_{r_{C_L}}} = 0.275$ 1/rad

$C_{l_{p_w}} = -0.192$ 1/rad

$C_{n_{\beta_o}} = 0$

$C_{n_{\beta_{C_L^2}}} = -0.132$ 1/rad

$C_{r_{C_L^2}} = -0.166$ 1/rad

$C_{n_{r_{C_D}}} = -0.453$ 1/rad

$C_{Y_{\beta_{C_L^2}}} = -0.577$ 1/rad

$C_{m_{o_w}} = 0.$

Wing trailing edge flap (elevon) effectiveness (K_{TEF_W}) is a function of flap deflection:

TABLE 3-2 - ELEVON EFFECTIVENESS AS A FUNCTION OF ELEVON DEFLECTION ($f_{1_{AERO}}$)

δ_{TEF_W} (rad)	K_{TEF_W} ($f_{1_{AERO}}$)
0	1.0
0.175	1.0
0.349	0.77
0.524	0.59
0.698	53
1.047	0.45
1.745	0.45

3.3.3 Additional Horizontal Tail (Canard) Data

To convert the outputs of the generalized aerodynamic equations to canard forces and moments, the following additional data are required (See constant list for Section 2.0.1.2):

$(\varepsilon/C_{L_W}) = 0.162$ rad

$i_H = 0.$

$c_H = 6.42$

$K_{\alpha_{\delta_e}} = 0.$ (The effects of the canard trailing edge flap are calculated by the generalized aerodynamic equations).

3.3.4 Additional Vertical Tail Data

To convert the outputs of the generalized aerodynamic equations to vertical tail forces and moments, the following additional data are required (See constant list for Section 2.0.1.3):

$K_V = 0$

$K_{\alpha_{\delta_r}} = 0.5$ (The rudder is modeled as a control surface which changes the tail angle of attack as a function of control deflection)

$c_V = 8.49$ ft

$C_{n_{o_V}} = 0.$

Vertical tail control surface (rudder) effectiveness (K_{EFF_r}) is a function of control surface deflection (δ_{C_V}):

TABLE 3-3 RUDDER EFFECTIVENESS AS A FUNCTION OF RUDDER DEFLECTION ($f_{2_{AERO}}$)

δ_{C_V} (rad)	K_{EFF_r} ($f_{2_{AERO}}$)
0	1.0
0.175	1.0
0.349	0.82
0.524	0.62
0.698	0.55
1.047	0.47
1.745	0.47

Vertical tail effectiveness ($V_{T_{EFF}}$) is a function of angle of attack:

TABLE 3-4 - VERTICAL TAIL EFFECTIVENESS AS A FUNCTION OF ANGLE OF ATTACK ($f_{3_{AERO}}$)

α (rad)	$V_{T_{EFF}}$ ($f_{3_{AERO}}$)
-3.142	1.00
0.349	1.00
0.524	0.70
0.698	0.25
0.873	0
2.269	0
2.443	0.25
2.618	0.70
2.793	1.00
3.142	1.00

3.3.5 Fuselage Data

The following data are required for the fuselage forces and moments equations (Section 2.0.1.5):

$(A/q)_{MAX} = 1.443\ ft^2$	$n_1 = 2.0$
$(S/q)_{MAX} = 367.8\ ft^2$	$n_2 = 1.867$
$(N_{F/q})_{MAX} = 367.8\ ft^2$	$n_3 = 1.522$
$(M/q)_{MAX_1} = 532.0\ ft^3$	$n_4 = 0.8$
$(M/q)_{MAX_2} = -110.6\ ft^3$	$n_5 = 1.0$
$(N/q)_{MAX_1} = 532.0\ ft^3$	$n_6 = 0.8$
$(N/q)_{MAX_2} = -110.6\ ft^3$	$n_7 = 1.0$
$\alpha_{o_F} = 0.0349$ rad	$\Delta FS_{F_o} = 17.8$ ft
$\alpha_{1_F} = 1.536$ rad	$A_{FS_1} = 0.262$ rad
$\alpha_{2_F} = 1.571$ rad	$A_{FS_2} = 0.803$ rad
$K_{Y_F} = 0.0$	

3.4 Propulsion System Data

The SF-121 baseline aircraft uses two ($n_{eng} = 2$) scaled MFTF-2800-2S-1 engines (Ref (b)). The performance and physical characteristics (Section 3.4.2) of these "paper" engines were developed by Vought from a Pratt and Whitney parametric cycle analysis computer program. Vought and Pratt and Whitney believe that the resulting performance is attainable for a 1995 IOC.

3.4.1 Propulsion System Forces and Moments Data

The following data are required to calculate forces and moments due to direct thrust, ram drag, and Coriolis effects once thrust, inlet mass flows, and thrust vectoring have been determined: (See constant list for Sections 2.0.2, 2.0.3, and 2.0.5)

$\ell_{NOZ} = 4.26$ ft $\qquad K_{AFT_1} = -0.13$

$\ell_{DUCT} = 27.92$ ft $\qquad K_{AFT_2} = 1.0$

$\sigma_y = 0$ $\qquad r_{IN} = 1.31$ ft

3.4.2 Propulsion System Performance Data

Gross thrust levels for idle, minimum afterburner, and maximum afterburner power settings are functions of Mach number (M_N):

TABLE 3-5 - IDLE AND MINIMUM AND MAXIMUM AFTERBURNER THRUST AS FUNCTIONS OF MACH NUMBER (f_{PS_1}, f_{PS_2}, and f_{PS_3})

M_N	$F_{G_{IDL}}$* (f_{PS_1})	$F_{G_{MIN}}$* (f_{PS_2})	$F_{G_{MAX}}$* (f_{PS_3})
0.0	629	9323	15416
0.1	753	9491	15705
0.2	1004	9772	16162
0.3	1306	10105	16705

*Single engine data in pounds

Maximum inlet mass flow rate ($\dot{m}_{MAX}$) is also a function of M_N:

TABLE 3-6 - MAXIMUM INLET MASS FLOW RATE AS A FUNCTION OF MACH NUMBER (f_{PS_7})

M_N	$\dot{m}_{MAX}$* (f_{PS_7})
0.0	138.2
0.1	140.1
0.2	143.1
0.3	146.5

*Single engine data in lbm/sec

The fraction of $\dot{m}_{MAX}$ which actually enters each engine is linearly related to the ratio of engine thrust level to minimum afterburner thrust ($F_{G_{MIN}}$) by the constants K_{m_1} and K_{m_2}: (Used in Sections 2.1.2 and 2.1.4)

$$K_{m_1} = 0.565; \; K_{m_2} = 0.435$$

Loss of gross thrust due to RCS bleeding is linearly related to percent bleed by the constants K_{BT_1} and K_{BT_2}: (Used in Section 2.1.1 and 2.1.4)

$$K_{BT_1} = -0.0276, \; K_{BT_2} = 1.0$$

3.4.3 Propulsion System Dynamics Data

Engine deceleration and acceleration limits and time constants are functions of fractional minimum afterburner thrust ($T_F(I)$):

TABLE 3-7 - ENGINE ACCELERATION AND DECELERATION LIMITS AND TIME CONSTANT AS FUNCTIONS OF FRACTIONAL MINIMUM AFTERBURNER THRUST (f_{PS_4}, f_{PS_5}, and f_{PS_6})

$T_F(I)$	$\dot{T}_{F_{MAX}}$ (f_{PS_4})	$\dot{T}_{F_{MIN}}$ (f_{PS_5})	τ_{ENG}-sec (f_{PS_6})
0	0.10	-0.100	1.0
0.133	0.40	-0.400	0.5
0.200	0.40	-0.475	0.4
0.333	0.40	-0.625	0.3
0.667	0.40	-1.000	0.2
1.0	0.40	-1.000	0.2

The afterburner is lit when $T_{AB_{IN}} \geq T_{AB_{ON}}$ or when $T_c(I)/F_{G_{MIN}} > 1$. For the SF-121, $T_{AB_{ON}} = 0.1$. The afterburner is turned off when $T_{AB}(I) \leq T_{AB_{OFF}}$. For the SF-121, $T_{AB_{OFF}} = 0.001$.

The time constant and deceleration and acceleration limits of the afterburner response are: (Used in Section 2.1.1)

$$\tau_{AB} = 0.05 \text{ sec}; \ \dot{T}_{AB_{MAX}} = 20.; \ \dot{T}_{AB_{MIN}} = -20.$$

Data required for calculating engine angular momentum include fractional rpm as a function of fractional minimum afterburner thrust ($T_F(I)$), engine moment of inertia (J_{ENC}), maximum engine rotational speed ($\Omega_{e_{MAX}}$): (Used in Section 2.1.3)

$$J_{ENC} = 3.14 \text{ slug ft}^2/\text{engine}$$

$$\Omega_{e_{MAX}} = 1063.8 \text{ rad/sec} = 10159 \text{ rpm}$$

TABLE 3-8 - FRACTIONAL RPM AS A FUNCTION OF FRACTIONAL MINIMUM AFTERBURNER THRUST (f_{PS_8})

$T_F(I)$	F_{RPM} (f_{PS_8})
0	0
0.133	0.280
0.200	0.490
0.333	0.665
0.667	0.835
1.0	1.000

The generic VATOL model thrust command includes T_{CMD} which is formulated in the control system plus an option for yaw control using differential thrust. The yaw control option is not included in the SF-121. Therefore, K_{T_Y} in Section 2.1.1 is zero for the SF-121.

3.5 Inlet Ram Forces and Moments Data

Inlet ram moment arm normalized to equivalent inlet radius (L_{RAM}), the angle between actual inlet flow angle and geometric inlet flow angle (ΔA_{TURN}), and the ratio of actual ram drag to theoretical ram drag (η_R) are all functions of inlet velocity ratio (VOV_{IN}) and geometric inlet flow angle (A_{TURN_o}):

TABLE 3-9 - NORMALIZED INLET RAM MOMENT ARM AS A FUNCTION OF INLET VELOCITY RATIO AND GEOMETRIC INLET FLOW ANGLE (f_{R_1})

VOV_{IN} \ A_{TURN_o} (rad)	0	0.349	0.785	1.222	1.571	3.142
0	0*	0.148	0.293	0.378	0.406	0.406
0.227	0	0.0811	0.187	0.286	0.340	0.340
0.298	0	0.0578	0.147	0.250	0.318	0.318
0.514	0	0.0195	0.0868	0.203	0.297	0.297
10.0	0	0.0195	0.0868	0.203	0.297	0.297

*When L_{RAM} = 0, ram drag acts at the center of the inlet plane parallel to the engine centerline.

TABLE 3-10 - DIFFERENCE BETWEEN ACTUAL AND GEOMETRIC INLET FLOW ANGLES AS A FUNCTION OF INLET VELOCITY RATIO AND GEOMETRIC INLET FLOW ANGLE (f_{R_2})

VOV_{IN} \ A_{TURN_o} (rad)	0	0.349	0.785	1.222	1.571	3.142
0	0	0.225*	0.340	0.273	0.147	0.147
0.227	0	0.225	0.340	0.273	0.147	0.147
0.298	0	0.135	0.217	0.211	0.119	0.119
0.514	0	0.0887	0.202	0.202	0.220	0.220
10.0	0	0.0887	0.202	0.202	0.220	0.220

* ΔA_{TURN} data are in radians

TABLE 3-11 - ACTUAL TO THEORETICAL INLET RAM RATIO AS A FUNCTION OF INLET VELOCITY RATIO AND GEOMETRIC INLET FLOW ANGLE (f_{R_3})

VOV_{IN} \ A_{TURN_o} (rad)	0	0.349	0.785	1.222	1.571	3.142
0	1.0	1.0	1.195	1.372	1.402	1.402
0.227	1.0	1.0	1.195	1.372	1.402	1.402
0.298	1.0	1.0	1.127	1.234	1.243	1.243
0.514	1.0	1.0	1.016	1.092	1.108	1.108
10.00	1.0	1.0	1.016	1.092	1.108	1.108

3.6 RCS Forces and Moments Data

The SF-121 aircraft has RCS control capability in roll only. The two (n_{JET} = 2) jets are located at the wing tips. Pertinent data for the jets are as follows: (See constant list for Section 2.0.4):

B_{REF} = 3.5 percent

$F_{RCS_{MX}}(1) = F_{RCS_{MX}}(2) = 1500$ lb.

$\overline{DMD}(1) = \overline{DMD}(2) = 1.$ (It is a demand bleed system).

$\overline{BLDM}(1) = \overline{BLDM}(2) = 1.$ (The system can demand more than the reference bleed level).

$\dot{F}_{RCS_{MAX}}(1) = \dot{F}_{RCS_{MAX}}(2) = 15000$ lb/sec

$\dot{F}_{RCS_{MIN}}(1) = \dot{F}_{RCS_{MIN}}(2) = -15000$ lb/sec

$F_{RCS_{A_{MAX}}}(1) = F_{RCS_{A_{MAX}}}(2) = 1500$ lb

$F_{RCS_{A_{MIN}}}(1) = F_{RCS_{A_{MIN}}}(2) = -1500$ lb

$\tau_{FRCS}(1) = \tau_{FRCS}(2) = 0.05$ sec

Available RCS force per engine is a function of percent bleed. The appropriate data are presented in Table 3-12. They are used in Section 2.0.4 as f_{RCS_1} with percent bleed (either B_{REF} or B_{AVL}) as the input and also as f_{RCS_2} with desired RCS force ($F_{RCS_{LU}}$) as the input. The data are for the MFTF-2800-25-1 engine which is quantified in reference (c).

TABLE 3-12 - AVAILABLE RCS FORCE AS A FUNCTION OF PERCENT BLEED (f_{RCS_1} and f_{RCS_2})*

B_{AVL} or B_{REF} (f_{RCS_2}) - %	RCS FORCE** (f_{RCS_1}) - lb
0	0
3.5	0.01
4.5	170.0
10.0	365.0
15.0	500.0
30.0	875.0

*When table is entered with B_{AVL} or B_{REF} the output is RCS force which is f_{RCS_1}. When table is entered with force output is percent bleed which is f_{RCS_2}.

**Per engine

The flow dynamics of the RCS efflux are represented by equations 13 and 14 of Section 2.0.4. These dynamics are cascaded with the RCS area actuators. The requis .e flow dynamics constants are:

$$\dot{F}_{RCS_{MAX}}(1) = \dot{F}_{RCS_{MAX}}(2) = 15000 \text{ lb/sec}$$

$$\dot{F}_{RCS_{MIN}}(1) = \dot{F}_{RCS_{MIN}}(2) = -15000 \text{ lb/sec}$$

$$F_{RCS_{A_{MAX}}}(1) = F_{RCS_{A_{MAX}}}(2) = 1500 \text{ lb}$$

$$F_{RCS_{A_{MIN}}}(1) = F_{RCS_{A_{MIN}}}(2) = -1500 \text{ lb}$$

$$\tau_{FRCS}(1) = \tau_{FRCS}(2) = 0.05 \text{ sec}$$

3.7 Actuation System Data

3.7.1 Constants for Formulating Actuator Inputs

The linking of the primary control variables (δ_{PITCH}, δ_{ROLL}, δ_{YAW}) to form the various actuator inputs is specified by the constants listed in Section 2.2.1. For the SF-121 these constants are:

$$\delta_{TEF_{W_R}} = 0.$$

$$\delta_{e_{MAX}} = 0.436 \text{ rad}$$

$$\delta_{e_{MIN}} = -0.436 \text{ rad}$$

$$K_{\delta_e} = -0.436$$

$$K_{\delta_y \delta_r} = 0.$$

$$K_{\theta_T \delta_p} = -0.262$$

$$K_{\theta_T \delta_r} = 0.$$

$$K_{\psi_T \delta_y} = -0.262$$

$$K_{\psi_T \delta_r} = 0.$$

$$\delta_{a_{MAX}} = 0.436 \text{ rad}$$

$$\delta_{a_{MIN}} = -0.436 \text{ rad}$$

$$K_{\delta_a} = -0.436$$

$$K_{\delta_y} = -0.436$$

$$\psi_{T_{REF}}(1) = \psi_{T_{REF}}(2) = 0.$$

The leading edge wing flaps and trailing edge canard flaps on the SF-121 are programmed as functions of angle of attack. The requisite constants for this feature are as follows:

$K_{LEF_{W1}} = 4.17$ $\qquad$ $K_{TEF_{H1}} = 5.56$

$K_{LEF_{W2}} = -0.189$ $\qquad$ $K_{TEF_{H2}} = -1.164$

3.7.2 Actuator Dynamics Data

The actuators are all rate and position limited. These limits plus time constants are specified in Table 3-13:

TABLE 3-13 - ACTUATOR CHARACTERISTICS

ACTUATOR	UPPER POSITION LIMIT[2]	LOWER POSITION LIMIT[2]	UPPER RATE LIMIT[3]	LOWER RATE LIMIT[3]	TIME CONSTANT (sec)
Right Wing Control Surface	NA[1]	NA	NA	NA	NA
Left Wing Control Surface	NA	NA	NA	NA	NA
Right Wing Trailing Edge Flap	1.047	-1.047	0.611	-0.611	0.05
Left Wing Trailing Edge Flap	1.047	-1.047	0.611	-0.611	0.05
Right Wing Leading Edge Flap	0.524	0.0	0.175	-0.175	0.10
Left Wing Leading Edge Flap	0.524	0.0	0.175	-0.175	0.10
Horizontal Tail Control Surface	NA	NA	NA	NA	NA
Horizontal Tail Trailing Edge Flap	0.436	-0.209	0.175	-0.175	0.10
Horizontal Tail Leading Edge Flap	NA	NA	NA	NA	NA
Vertical Tail Control Surface	0.436	-0.436	1.745	-1.745	0.05
Vertical Tail Trailing Edge Flap	NA	NA	NA	NA	NA
Vertical Tail Leading Edge Flap	NA	NA	NA	NA	NA
Left Wing RCS Jet Area	1.0	-1.0	10.0	-10.0	0.05
Right Wing RCS Jet Area	1.0	-1.0	10.0	-10.0	0.05
Left Engine Pitch Thrust Deflection	0.262	-0.262	0.873	-0.873	0.05
Right Engine Pitch Thrust Deflection	0.262	-0.262	0.873	-0.873	0.05
Left Engine Yaw Thrust Deflection	0.262	-0.262	0.873	-0.873	0.05
Right Engine Yaw Thrust Deflection	0.262	-0.262	0.873	-0.873	0.05

[1] NA means not applicable for SF-121

[2] all units are rad except RCS areas which are normalized

[3] all units are rad/sec except RCS areas which are 1/sec

3.8 Control System Data

3.8.1 Control System Function Switch Data

The control system function switch changes the heave, yaw, and pitch axis control system types and the roles of the pedals and lateral stock deflection as a function of airspeed. The required constant is:

$$V_{A_{SW}} = 60 \text{ kt} = 101.28 \text{ ft/sec}$$

3.8.2 Roll Control System Data

Most of the roll control system gains are specified in Section 2.3.2 as functions of airspeed (V_A). Several of these were determined to be constants for the SF-121:

$$K_{P_{c_I}} = f_{CS_{[illegible]}}(V_A) = 0.611 \text{ rad/sec}$$

$$K_{p_p} = [illegible](V_A) = 0.5 \text{ rad/rad/sec}$$

$$K_{p_{ATT}} = f_{CS_6}(V_A) = 1.0 \text{ rad/rad}$$

$$\tau_{ROL} = f_{CS_{22}}(V_A) = 0$$

The SF-121 roll control system input gain (K_{p_c}), error gain (K_{p_e}), and error integral gain ($K_{p_{e_{I1}}}$) remain functions of V_A and are specified in Table 3-14:

TABLE 3-14 ROLL INPUT, ROLL ERROR, AND ROLL ERROR INTEGRAL GAINS AS FUNCTIONS OF AIRSPEED (f_{CS_1}, f_{CS_3}, AND f_{CS_4})

V_A (kt)	V_A (ft/sec)	K_{p_c} (f_{CS_1})	K_{p_e} (f_{CS_3})	$K_{p_{e_{I1}}}$ (f_{CS_4})
0	0	0.1833	6.0	0.8
59.5	100.44	0.1833	6.0	0.8
60.0	101.28	0.1833	2.0	0.2
[illegible]	135.04	0.1833	2.0	0.2
120.0	202.56	0.3055	4.0	0.2
200.0	337.60	0.3055	2.0	0.2

Several of the roll control system gains are functions of CS_{SW}. These are specified in Table 3-15:

TABLE 3-15 ROLL RATE, INTEGRAL OF ROLL RATE, AND ROLL ATTITUDE SELECTOR GAINS AS FUNCTIONS OF CS_{SW} ($f_{CS_{23}}$, $f_{CS_{24}}$, and $F_{CS_{25}}$)

GAIN \ CS_{SW}	0	1
K_{p_B} ($f_{CS_{23}}$)	0	1
$K_{\int p}$ ($f_{CS_{24}}$)	0	1
K_{ϕ} ($f_{CS_{25}}$)	1	0

Other required data for the SF-121 roll control system are as follows:

$$p_{e_{LIM}} = 1.0; \; K_{p_{TRM_1}} = K_{r_{TRM_1}} = 0.$$

Note that K_{p_c} and $K_{p_{c_I}}$ are gains on lateral stick deflection or pedal deflection and might have to be adjusted to satisfy control sensitivity requirements. The ratio between K_{p_c} and $K_{p_{c_I}}$ should not, however, be altered.

3.8.3 Pitch Control System Data

Similar to the roll system, many pitch control system gains are specified as functions of V_A. Three of these are constant for the SF-121:

$$K_{q_{e_{I1}}} = f_{CS_{10}}(V_A) = 0.2 \text{ rad/sec/rad}$$

$$K_{q_q} = f_{CS_{11}}(V_A) = 0.5 \text{ rad/rad/sec}$$

$$K_{q_{ATT}} = f_{CS_{12}}(V_A) = 1.0 \text{ rad/rad}$$

The pitch control system input gain (K_{q_c}), input integrator gain ($K_{q_{c_I}}$), input shaping filter time constant (τ_{PITCH}), and error gain (K_{q_e}) remain functions of V_A and are specified in Table 3-16:

TABLE 3-16 PITCH INPUT, PITCH INPUT INTEGRATOR, AND PITCH ERROR GAINS AND PITCH SHAPING FILTER TIME CONSTANT AS FUNCTIONS OF AIRSPEED (f_{CS_7}, f_{CS_8}, f_{CS_9}, and $f_{CS_{26}}$)

V_A(kt)	V_A(ft/sec)	K_{q_c} (f_{CS_7})	$K_{q_{c_I}}$ (f_{CS_8})	K_{q_e} (f_{CS_9})	τ_{PITCH} ($f_{CS_{26}}$)
0	0	0.262	0	10.0	0.25
59.5	100.44	0.262	0	10.0	0.25
60.0	101.28	0.105	0.349	15.0	0.0
80.0	135.04	0.105	0.349	15.0	0.0
120.0	202.56	0.105	0.349	8.00	0.0
200.0	337.60	0.105	0.349	5.0	0.0

Two of the pitch control system gains are functions of CS_{SW}. These are specified in Table 3-17:

TABLE 3-17 INTEGRAL OF PITCH RATE AND PITCH ATTITUDE SELECTOR GAINS AS FUNCTIONS OF CS_{SW} ($f_{CS_{27}}$ and $f_{CS_{28}}$)

GAIN \ CS_{SW}	0	1
$K_{\int q}$ ($f_{CS_{27}}$)	0	1
K_θ ($f_{CS_{28}}$)	1	0

Other required data for the SF-121 pitch control system are as follows:

$$q_{e_{LIM}} = 1.0;\ K_{q_{TRM_1}} = 0;\ K_{q_{TRM_2}} = 0.349 \text{ rad/sec}$$

Similar to the roll control system, K_{q_c} and $K_{q_{c_I}}$ are subject to change due to control sensitivity considerations; the ratio of $K_{q_{c_I}}$ to K_{q_c} should not be altered.

3.8.4 Yaw Control System Data

Three of the yaw control system V_A-scheduled gains are constant for the SF-121:

$$K_{r_c} = f_{CS_{13}}(V_A) = 0.262 \text{ rad}$$

$$K_{r_{c_I}} = f_{CS_{14}}(V_A) = 0$$

$$\tau_{YAW} = 0.25 \text{ sec}$$

The yaw control system error gain (K_{r_e}), error integrator gain ($K_{r_{e_{I1}}}$), yaw rate feedback gain (K_{r_r}), and yaw attitude feedback gain ($K_{r_{ATT}}$) remain functions of V_A and are specified in Table 3-18:

TABLE 3-18 YAW ERROR, YAW ERROR INTEGRATOR, YAW RATE FEEDBACK, AND YAW ATTITUDE FEEDBACK GAINS AS FUNCTIONS OF AIRSPEED ($f_{CS_{15}}$, $f_{CS_{16}}$, $f_{CS_{17}}$, and $f_{CS_{18}}$)

V_A(kt)	V_A(ft/sec)	K_{r_e} ($f_{CS_{15}}$)	$K_{r_{e_{I1}}}$ ($f_{CS_{16}}$)	K_{r_r} ($f_{CS_{17}}$)	$K_{r_{ATT}}$ ($f_{CS_{18}}$)
0	0	13.0	0.8	0.5	1.0
59.5	100.44	13.0	0.8	0.5	1.0
60.0	101.28	0.3	0.2	1.0	0
80.0	135.04	1.1	0.2	1.0	0
120.0	202.56	1.1	0.2	1.0	0
200.0	337.60	1.1	0	1.0	0

The SF-121 requires a lateral acceleration to δ_{YAW} feedback at high speeds. The gain of this feedback (K_{a_y}) is a function of dynamic pressure ($\bar{q}$):

TABLE 3-19 LATERAL ACCELERATION FEEDBACK GAIN AS A FUNCTION OF DYNAMIC PRESSURE ($f_{CS_{19}}$)

$\bar{q}$ - lb/ft^2	K_{a_y} - rad/ft/sec^2 ($f_{CS_{19}}$)
0	0
10	.0825
20	.105
46	.08
127	.04
200	.04

Four of the yaw control system gains are functions of CS_{SW}. These are specified in Table 3-20:

TABLE 3-20 INTEGRAL OF YAW RATE, YAW ATTITUDE, YAW RATE, AND ROLL ATTITUDE TO YAW SELECTOR GAINS AS FUNCTIONS OF CS_{SW} ($f_{CS_{32}}$, $f_{CS_{33}}$, $f_{CS_{30}}$, and $f_{CS_{31}}$)

GAIN \ CS_{SW}	0	1
$K_{\int r}$ ($f_{CS_{32}}$)	0	1
K_{ψ} ($f_{CS_{33}}$)	0	0
K_{r_B} ($f_{CS_{30}}$)	0	1
$K_{\phi_{r_s}}$ ($f_{CS_{31}}$)	1	0

Other required data for the SF-121 yaw control system are as follows:

$$r_{e_{LIM}} = 1.0;\ K_{p_{TRM_2}} = 0.349 \text{ rad/sec};\ K_{r_{TRM_2}} = 0.$$

Similar to the pitch and roll systems, K_{r_c} and $K_{r_{c_I}}$ are subject to change due to control sensitivity considerations; the ratio of $K_{r_{c_I}}$ to K_{r_c} should not be altered.

3.8.5 Heave Control System Data

Two of the heave control system gains are specified as functions of V_A. Each of these gains has just two values which depend on CS_{SW}:

$$K_{z_e} = f_{CS_{20}}(V_A) = \begin{cases} 0 & CS_{SW} = 0. \\ -\ 550 \text{ lb/ft/sec} & CS_{SW} \neq 0. \end{cases}$$

$$K_{z_{e_I}} = f_{CS_{21}}(V_A) = \begin{cases} 0 & CS_{SW} = 0. \\ 0.2 \text{ lb/sec/ft/sec} & CS_{SW} \neq 0. \end{cases}$$

Other required heave control system data for the SF-121 are $K_{\dot{z}_{e_c}}$ = 20ft/sec, $T_{e_{LIM}}$ = 30000 lb, K_{THROT} = 30000 lb.

4.0 References

(a) Bihrle, Jr, William and Heyman, Arthur C., The Spin Behavior of Aircraft, GAEC Report No. 394-68-1, December 1967

(b) Driggers, Herbert H., Study of Aerodynamic Technology for V/STOL Fighter/Attack Aircraft, NASA CR-152132, May 1978

(c) Hillman, G. W., Mathematical Engine Model for VATOL Simulation, Vought DIR-2-322CO/9DIR-01, August 14, 1979