NASA Technical Memorandum 83124

NASA-TM-83124 19810020601

Guide for Users of the National Transonic Facility

LIBRARY COPY

6 1981

LANGLEY RESEARCH CENTER
LIBRARY, NASA
LANGLEY STATION
HAMPTON, VIRGINIA

Dennis E. Fuller

JULY 1981

FOR REFERENCE

NOT TO BE TAKEN FROM THIS ROOM

NASA

NF00386

NASA Technical Memorandum 83124

Guide for Users of the National Transonic Facility

Dennis E. Fuller
Langley Research Center
Hampton, Virginia

National Aeronautics
and Space Administration

Scientific and Technical
Information Branch

1981

CONTENTS

SUMMARY 1

INTRODUCTION 1

FACILITY INFORMATION 2
General Description 2
Aerodynamic Test Capabilities 4
Model Assembly and Checkout 5
Assembly room 5
Model handling 6
Model Support Hardware 7
Sting-mounted model support 7
Half-model support 8

TEST HARDWARE REQUIREMENTS 9
Design 9
Strength 9
Fatigue 10
Dynamic and static stability 10
Fracture 10
Fabrication 10
Material Selection 10
Design Analysis Report 10

DATA ACQUISITION/REDUCTION 11
Hardware 11
Steady state 11
Dynamic data 12
Software 12
Pre-test 12
On-line data processing 13
Final data processing 13

INSTRUMENTATION 13
Wiring Description 13
Pressure Measurements 14
Force Measurements 14
Environmental Requirements 15

USER COST BREAKDOWN 15
Occupancy Cost 15
Nitrogen Cost 16
Electrical Power Cost 16
Special Charges 16

OPERATIONAL CONSIDERATIONS 16
Run Time/Model-Access Time 16
Power and Equipment Delays 16

APPENDIX A - NMI 1300.1: DEVELOPMENT WORK FOR INDUSTRY IN NASA WIND TUNNELS 17

APPENDIX B - NATIONAL TRANSONIC FACILITY ESTIMATED PERFORMANCE MAPS - MACH NUMBERS 0.10 to 1.20 23

REFERENCES 36

SUMMARY

The National Transonic Facility (NTF) is a fan-driven, closed-circuit, continuous-flow, pressurized wind tunnel. The test section is 2.5 m × 2.5 m and 7.62 m long with a slotted-wall configuration. The NTF will have a Mach number range from 0.2 to 1.2, with Reynolds numbers up to 120×10^6 at Mach 1 (based on a reference length of 0.25 m). The pressure range for the facility will be from 1 to about 9 bars (1 bar = 100 kPa), and the temperature can be varied from 340 to 78 K. This report provides potential users of the NTF with the information required for preliminary planning of test programs and for preliminary layout of models and model supports which may be used in such programs.

INTRODUCTION

The National Transonic Facility (NTF) is currently under construction with full operation projected for mid 1983. This document is intended to provide potential users of the NTF with the information required for preliminary planning of test programs and for preliminary layout of models and model supports which may be used in such programs.

If it is apparent, on the basis of preliminary planning and layouts, that a proposed experiment is feasible and that it is desirable to proceed with testing, the facility head should be contacted and a planning meeting should be held to verify that the preliminary work is correct and establish an understanding of how the program should proceed.

In no event should the information in this manual be used as the sole basis for fabricating models or other test hardware.

It is NASA policy to encourage the use of the NTF for research and development testing. The procedure to be used for access to the NTF is delineated in NASA Management Instruction 1300.1 (appendix A). Questions regarding the procedure for the use of, or the cost of the use of, the NTF should be directed to

Head, National Transonic Facility
Mail Stop 267
NASA Langley Research Center
Hampton, VA 23665

Users will be provided the necessary support for the preparation, checkout, and installation of hardware (models) for testing. NASA will prepare and carry out the test and provide the user with data in the format agreed upon.

Appendix B by Blair B. Gloss and Donna Nystrom presents estimated performance maps for the NTF.

FACILITY INFORMATION

General Description

The National Transonic Facility (refs. 1 to 4) is a fan-driven, closed-circuit, continuous-flow, pressurized wind tunnel (fig. 1). The test section is 2.500 m × 2.500 m and 7.620 m long with a slotted-wall configuration. There are six slots each in the top and bottom walls and two slots per sidewall (fig. 2). The test-section design provides for fifteen 15.24-cm diameter windows each in the top and bottom walls, three 0.61-m × 0.76-m windows in each of the sidewalls and 10 lighting windows in each of the sidewalls.

In order to maintain good flow quality and aerodynamic efficiency over the wide range of test capabilities, the test-section top and bottom walls, the reentry flaps at the rear of the test-section slots, and the step height for reentering slot flow are remotely variable.

The test gas may be dry air or nitrogen. For the elevated-temperature mode of operation (test gas normally air), heat removal is by means of a water-cooled heat exchanger (cooling coil) located at the upstream end of the settling chamber. For the cryogenic mode of operation, heat removal is by means of evaporation of liquid nitrogen, which is sprayed into the circuit upstream of the fan. By utilizing liquid nitrogen as a coolant, the tunnel test-temperature range is variable from 340 to 78 K. When nitrogen is injected into the circuit, venting must occur to maintain a constant pressure. Thermal insulation is installed internal to the pressure shell to minimize energy consumption.

Flow quality was considered an important part of facility design. Four antiturbulence screens incorporated in the settling chamber and a contraction of 15:1 from the settling chamber to the nozzle throat are provided to reduce turbulence. Acoustic treatment upstream and downstream of the fan is provided to minimize fan noise effects.

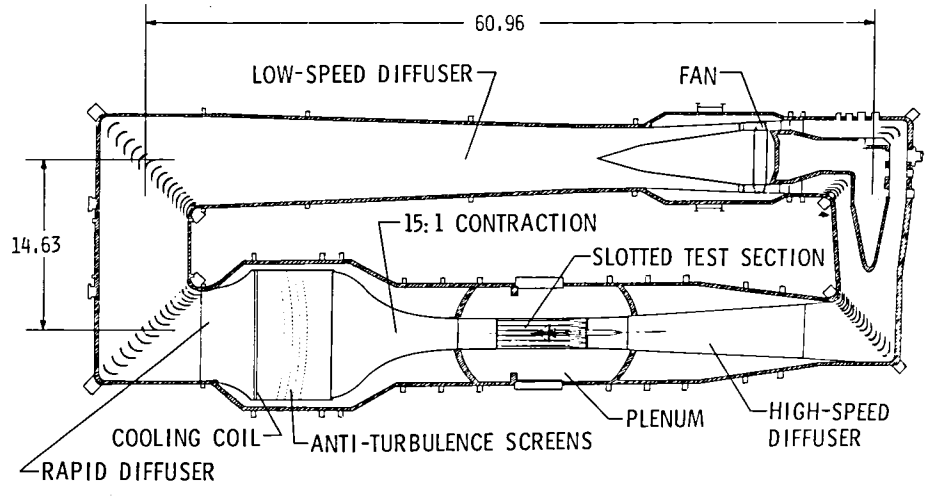

Figure 1.- National Transonic Facility circuit drawing. All dimensions are in meters.

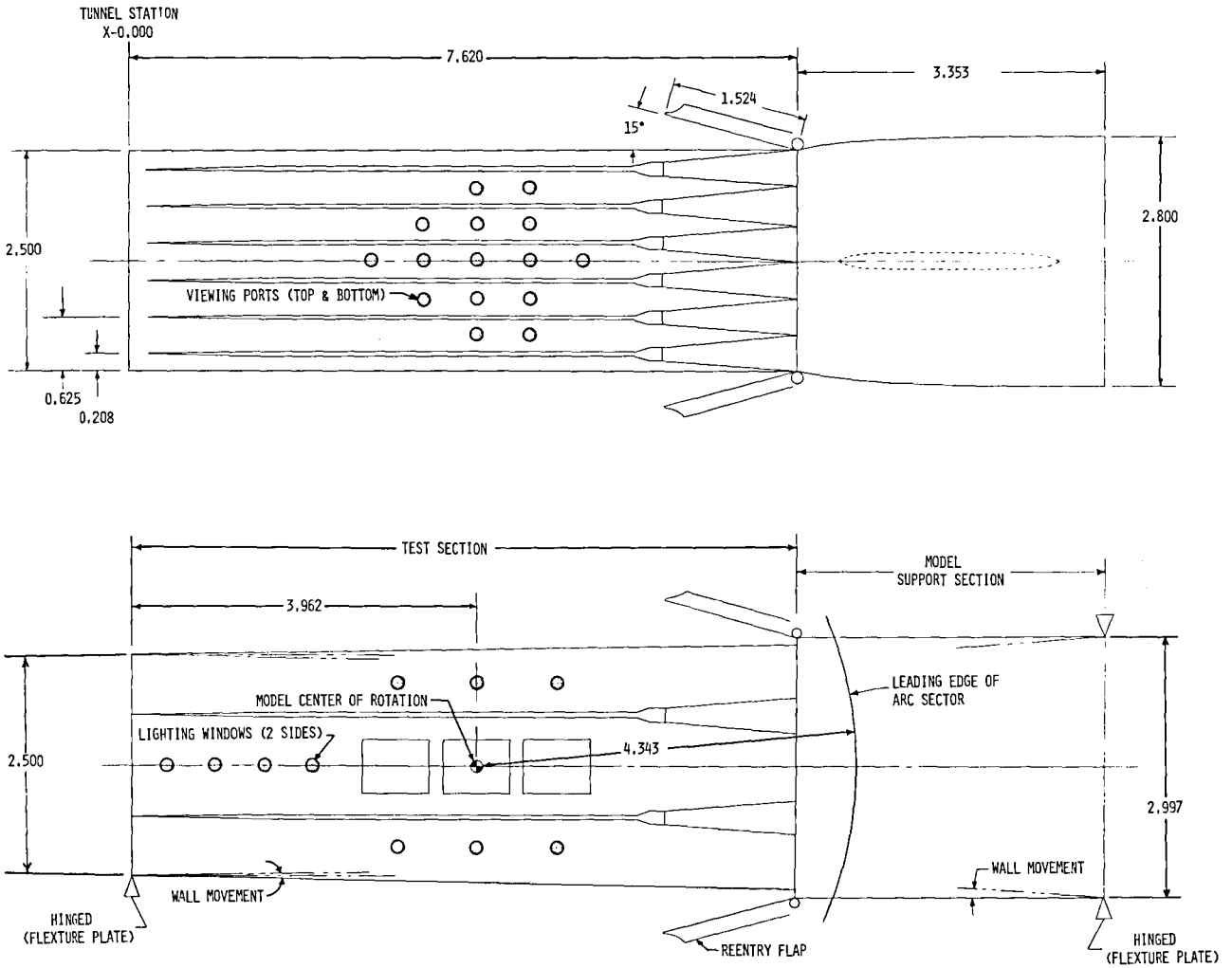

Figure 2.- Test section and model support section. All dimensions are in meters.

To facilitate model access during a test series, with a minimum loss of nitrogen (energy), and time, gate valves upstream and downstream of the test section are provided which isolate the plenum. When the plenum is isolated, it may be vented to the atmosphere and conditioned to provide a work environment. Further in order to provide rapid access to the model alone for configuration modifications during a test series, model access tubes are provided (fig. 3). The tubes are inserted from either side of the plenum and close around the model to form a thermally insulated enclosure. This enclosure can be conditioned for safe personnel entry while the plenum is cold and circuit pressure is maintained behind the gate valves.

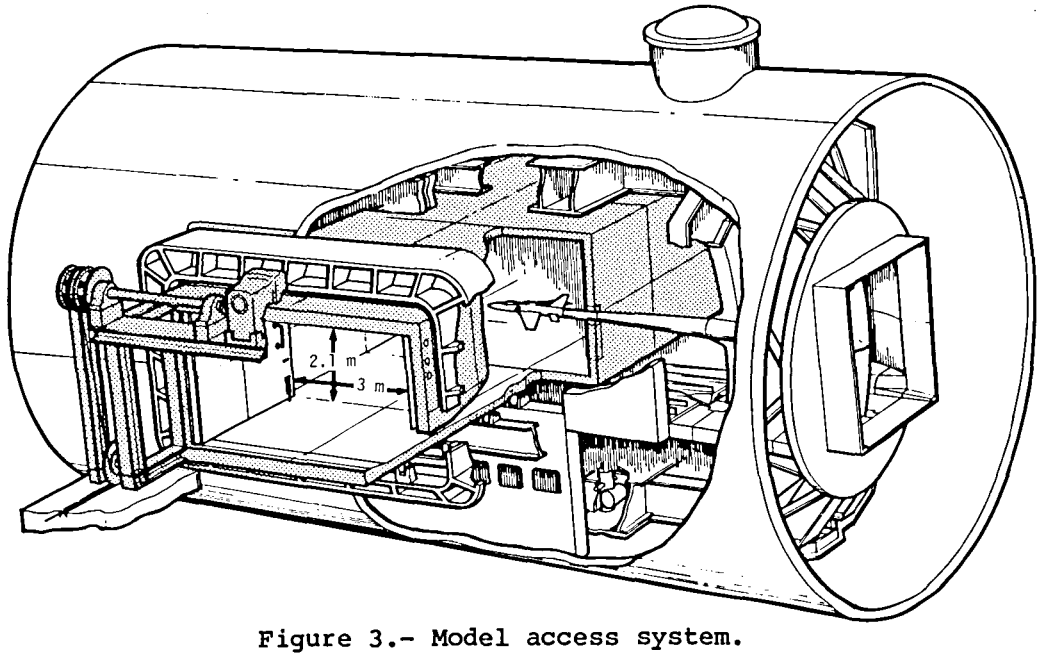

Figure 3.- Model access system.

The tunnel drive system consists of two variable-speed induction motors with a combined power output of 3.5×10^7 watts (4.9×10^7 watts overload), a two-speed gear box, and a synchronous motor with a power output of 3.1×10^7 watts (4.5×10^7 watts overload). The compressor consists of a fixed-pitch, single-stage fan with variable-inlet guide vanes. The drive system can be operated in either of two modes: (1) The synchronous mode where the fan is operated at the constant synchronous speed of 360 rpm and the inlet guide vanes are varied to achieve the desired compression ratio. (2) The variable fan speed mode where the induction motor(s) are used to drive the fan over a range of rotational speeds (up to 600 rpm) to achieve the desired compression ratio.

Aerodynamic Test Capabilities

Figure 4 shows that the National Transonic Facility will have a Mach number range from 0.2 to 1.2, with Reynolds numbers up to 120×10^6 at Mach 1 (based on a reference length of 0.25 m). The pressure range for the facility will be from 1 to about 9 bars (1 bar = 100 kPa), and the temperature can be varied from 340 to 78 K.

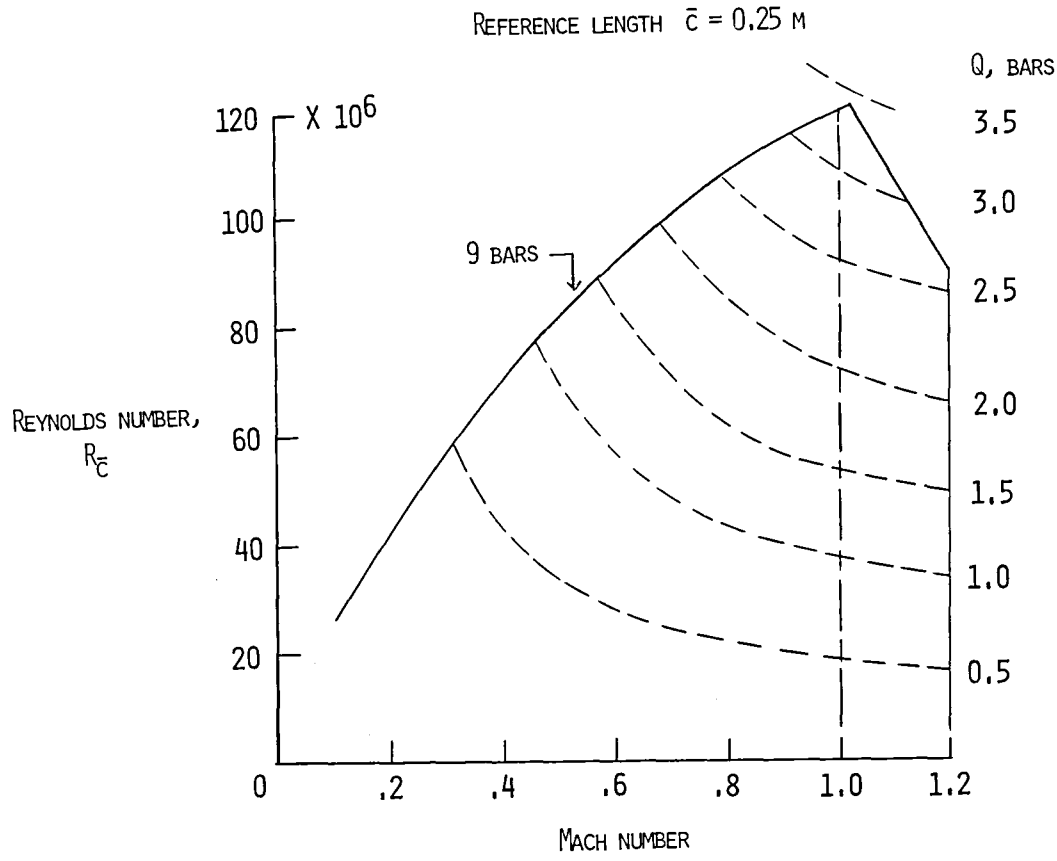

Figure 4.- Maximum Reynolds number operating envelope.

The mode of operation with the water-cooled heat exchanger is at the higher temperature (340 K). The capability of the cooling coil to absorb the heat of compression is limited to about 3.0×10^7 watts.

The top portion of the Reynolds number range is achieved with the power system in an overload condition and is time-limited. At maximum power, operation is limited to about 10 minutes.

Model Assembly and Checkout

Assembly room.- Isolated and secure assembly rooms 9.1 m long by 7.6 m wide will be provided for pre-test model buildup, instrumentation checkout, and post-test model disassembly.

The assembly room is outfitted with a backstop system for holding the model-sting arrangement during model assembly and checkout (fig. 5). Design load capacity of the backstop is 86 736 N normal force (applied 4.34 m forward of the backstop centerline) and 41 615 N axial force. The backstop is equipped with pitch, roll, and height adjustment capability. The interface (thread and taper) at the front of the backstop roll mechanism is the same as that for the

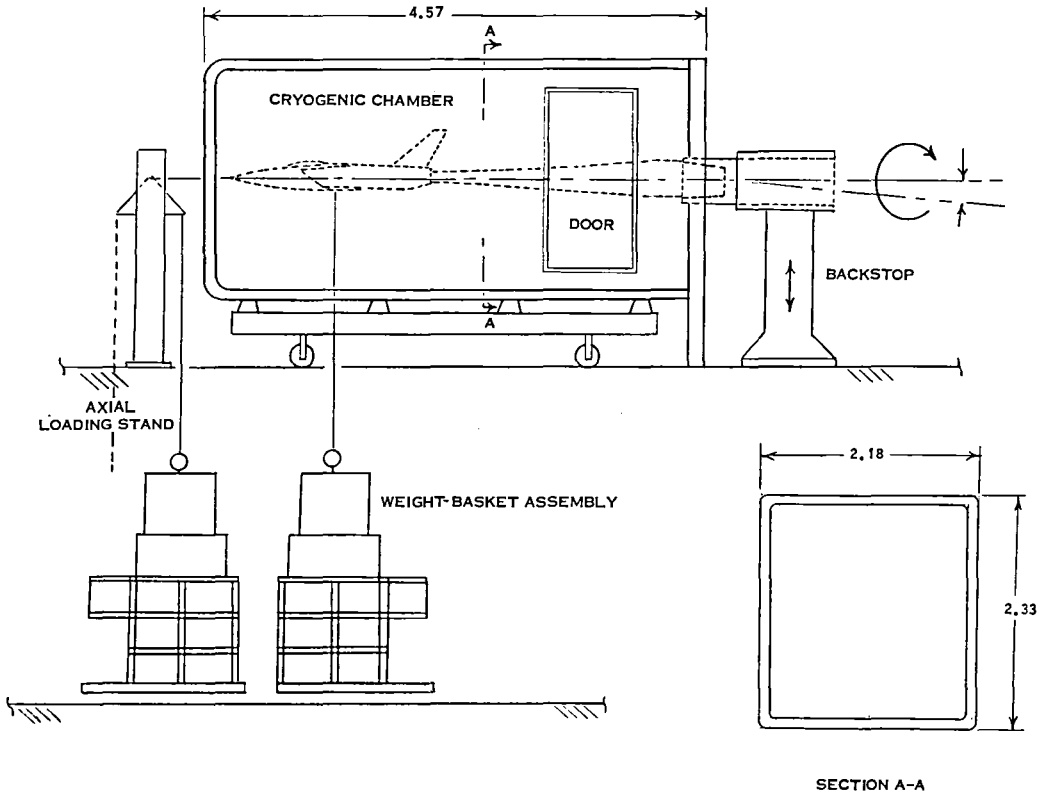

Figure 5.- Model preparation equipment. All dimensions are in meters.

test-section roll mechanism. The assembly room is equipped to permit check loads to be applied to the test configuration mounted on the backstop. This is accomplished by using weight baskets located below floor level. Loads up to 88 960 N are available. Load combinations will depend on model configuration.

A system for thermally cycling the test configuration to cold test temperatures, with check loads, will be provided. This thermal cycle capability is at atmospheric pressure.

Instrumentation from each assembly room can be connected to the NTF data acquisition system to permit data recording during buildup, checkout, and calibration activities.

Model handling.- Assembled model-sting combinations will be transported from the model assembly room to the test section by a model handling cart with air-bearing support. Center-of-gravity location requirements for the model-sting combination relative to the model handling cart are noted in figure 6. It is the responsibility of the user to furnish sting clamps to secure the model-sting combination to the handling cart so that suitable balance is retained.

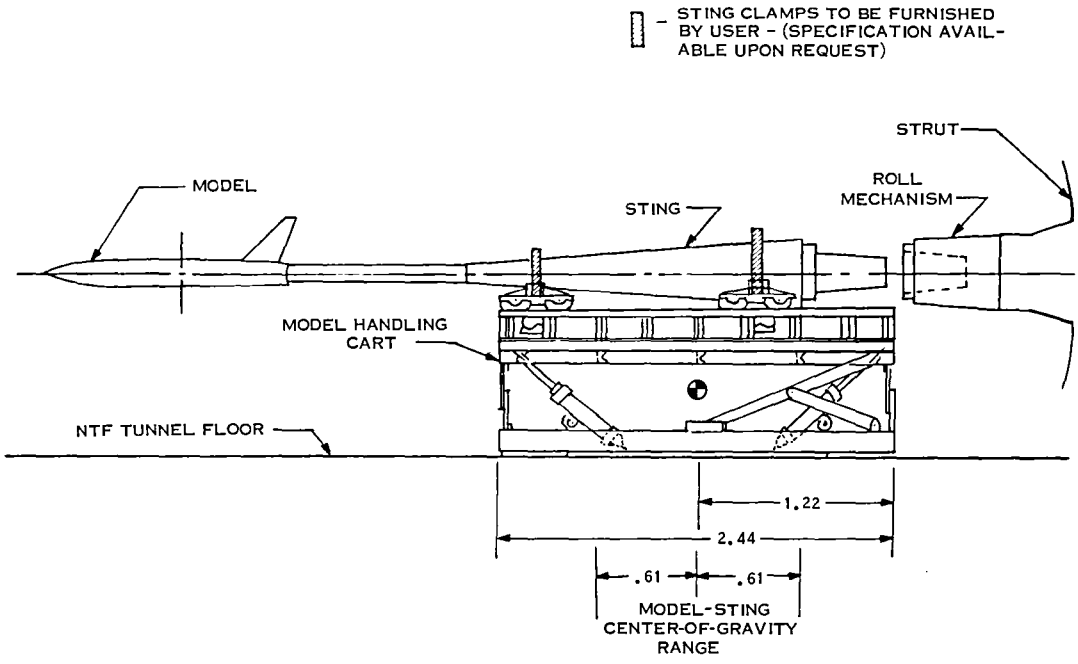

Figure 6.- Model handling cart. All dimensions are in meters.

Model Support Hardware

Sting-mounted model support.- Basic three-dimensional model support is provided by an aft-mounted sting. This sting is attached to a vertically mounted arc sector which is driven by a hydraulic cylinder to change the model pitch attitude. The arc-sector center of rotation is at tunnel station 3.962 m so that a model pitch center is maintained on the tunnel centerline throughout the angle-of-attack range.

The pitch range of the arc sector is from -11° to 19° at a rate up to 4° per second. This angle range may be offset by using bent knuckles. The arc sector can be operated in either a "pitch-pause" or "continuous" mode of operation. For angles of attack greater than 11°, the strut centerbody begins to pass below the tunnel floor level through doors opening downward.

The roll mechanism provides the interface between the arc sector and the model-sting combination. It has a roll range of -180° to 180° and rotates at 10° per second. Sideslip angles are achieved by using combined roll and pitch angles.

The design load capability of the arc-sector/roll mechanism system is as follows:

Normal force	-86 736 to 86 736 N
Axial force	-41 615 to 41 615 N
Side force	-44 480 to 44 480 N
Pitching moment	-2 938 to 2 938 N-m
Rolling moment	-1 763 to 1 763 N-m
Yawing moment	-1 875 to 1 875 N-m

(Moments about model pitch center located at test-section station 3.962)

The total resultant load from any combination of the preceding values is limited to 86 736 N.

Stub stings will be available for general use, and one is illustrated in figure 7. The stub sting provides an extension of the roll mechanism and minimizes the length of the tailored sting required for a specific model. Eventually, several stub stings will be available with varying load ranges.

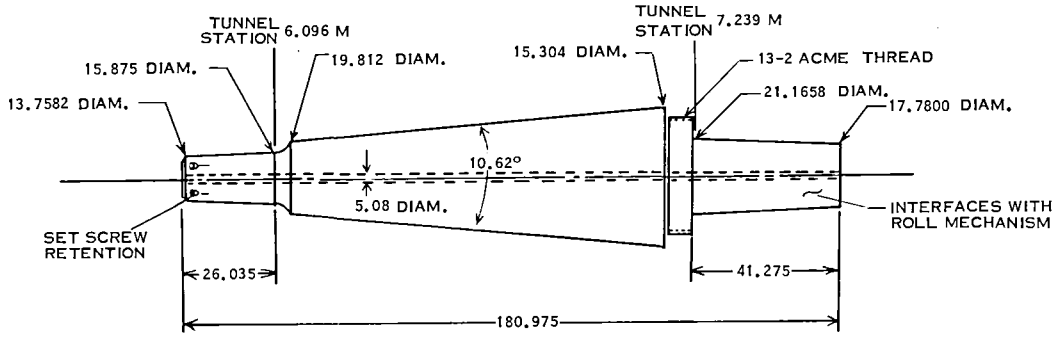

LOAD RANGE (APPLIED AT TUNNEL STATION 3.962 M)

NORMAL FORCE	-28 900	TO 28 900 N
PITCHING MOMENT	- 1 470	TO 1 470 N-M
ROLLING MOMENT	- 1 015	TO 1 015 N-M
YAWING MOMENT	- 735	TO 735 N-M
SIDE FORCE	-17 800	TO 17 800 N-M

Figure 7.- National Transonic Facility - stub sting 1. All dimensions are in centimeters unless otherwise noted.

Half-model support.- In addition to the arc-sector model support, a sidewall mount system will be provided for half models. A schematic of the system (preliminary) is shown in figure 8. The design load capability of the sidewall mount system which can accommodate a sidewall balance is as follows:

Normal force	-120 096 to 120 096 N
Axial force	-6 227 to 49 372 N
Side force	-8 896 to 8 896 N
Pitching moment	-16 950 to 16 950 N-m
Rolling moment	-75 248 to 75 248 N-m
Yawing moment	-3 729 to 30 058 N-m

(Moments about strut centerline at face of splitter plate)

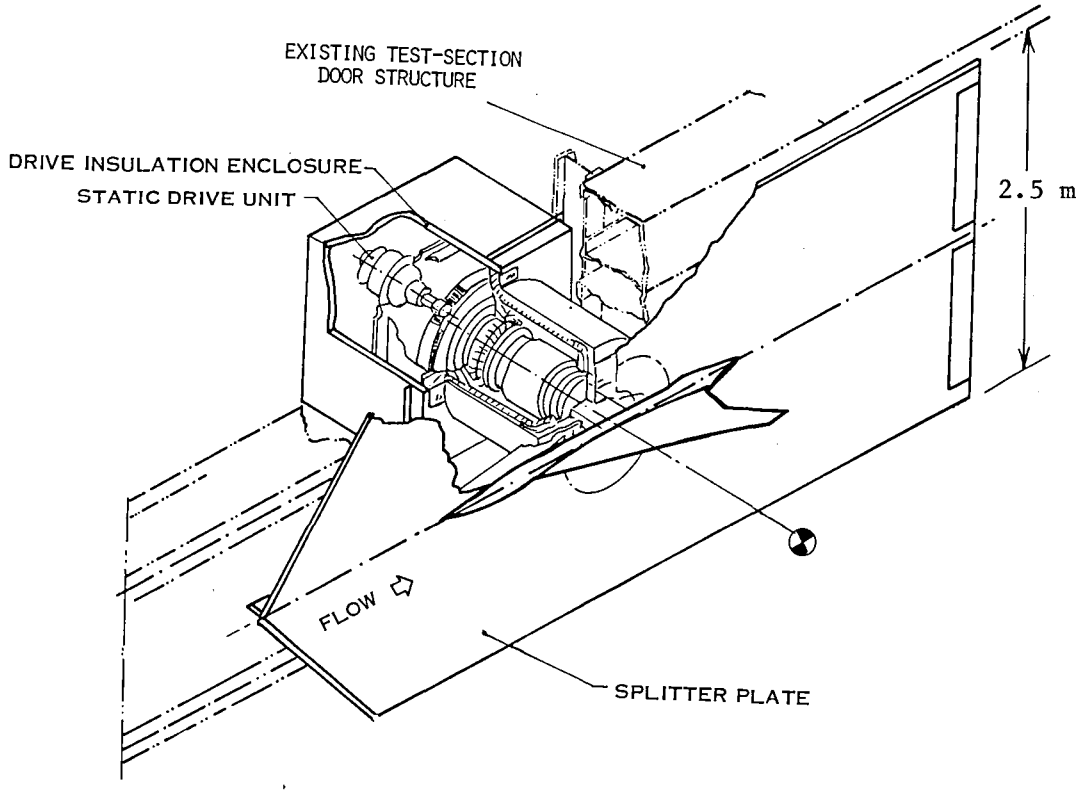

Figure 8.- Sidewall model support system.

The angle-of-attack range is ±180° at rates up to 4° per second. In addition to angle-of-attack variation, the sidewall mount will have the capability to oscillate the model over small angles. The target angular amplitude range is from -0.1° to 0.1° over a mean angle-of-attack range from -10° to 10°. The target frequency range capability is from 1 to 100 hertz. The center of rotation for angle of attack is located at test-section station 3.962 on the far sidewall at the test-section horizontal centerline.

TEST HARDWARE REQUIREMENTS

Design

In general, the models shall be designed according to the requirements of Langley Handbook LHB 8850.1, October 1976, entitled "User-Furnished Wind-Tunnel Model Criteria." However, certain criteria may be relaxed when supported by stringent quality assurance and in-depth analysis with testing as required for verification. In particular, the criteria in the sections which follow are appropriate for NTF models and/or model-sting systems.

Strength.- The strength (allowable stress tension or compression) safety factors are 3 for yield strength or 4 for ultimate strength, whichever occurs first, at the test temperature. If necessary, these may be reduced to 1.5 for

yield strength or 2 for ultimate strength. Stress calculations for meeting the relaxed criteria shall include stress-concentration effects on thermal stresses.

Fatigue.- In cases where fatigue is a design factor, analyses to assure safety over the design life shall be used per the Modified Goodman Diagram approach where the applied safety factor on mean stress may be reduced from 4 to 2 when supported by in-depth analysis.

Dynamic and static stability.- All model-sting systems shall be analyzed for divergence and flutter at the test dynamic pressure and temperature. A factor of 2 for divergence and flutter shall be required and verified by analyses and stiffness-testing unless large margins exist. Loads used in the divergence and flutter analysis shall reflect the transonic flow characteristics to the extent possible.

Fracture.- Sufficient analyses and nondestructive examination are required to assure freedom from brittle fracture. As a minimum, the material or materials selected for stings and models shall have a Charpy V-notch impact strength of at least 34 J at the test temperature. For the material or materials selected, based on peak working stress, the screening flaw size for the material shall be established using fracture mechanics methods.

Fabrication

In addition to a thorough stress analysis of the model design, a quality control plan for the model construction must be presented for review by NASA prior to model fabrication. At the time of model delivery, quality assurance reports must be provided to verify that the approved quality control plan has been followed and that the model has been fabricated as designed.

Material Selection

Material selection is left to the model designer and will depend primarily on testing requirements. In particular, selected material must be cryogenically acceptable, i.e., material that is characterized at cryogenic temperatures and meets the aforementioned Charpy impact strength requirements. Reference 5 is an excellent source for material selection and cites a number of documents that characterize cryogenic materials. Also, additional materials information is available from NASA Langley Research Center. However, filler materials for screw heads, etc., will be specified by NASA Langley.

Design Analysis Report

A detailed strength and stability analysis report for NTF test hardware (models/stings) is required 8 weeks prior to tunnel entry. Consultations prior to and during the design of models and stings are encouraged. NASA will review all models and equipment with respect to safety.

DATA ACQUISITION/REDUCTION

Hardware

Steady state.- The NTF data acquisition system is designed to acquire steady-state force and pressure data from models located on the test section and in the three model assembly rooms and to reduce a portion of the data in near real time. A schematic of the system functional arrangement is presented in figure 9.

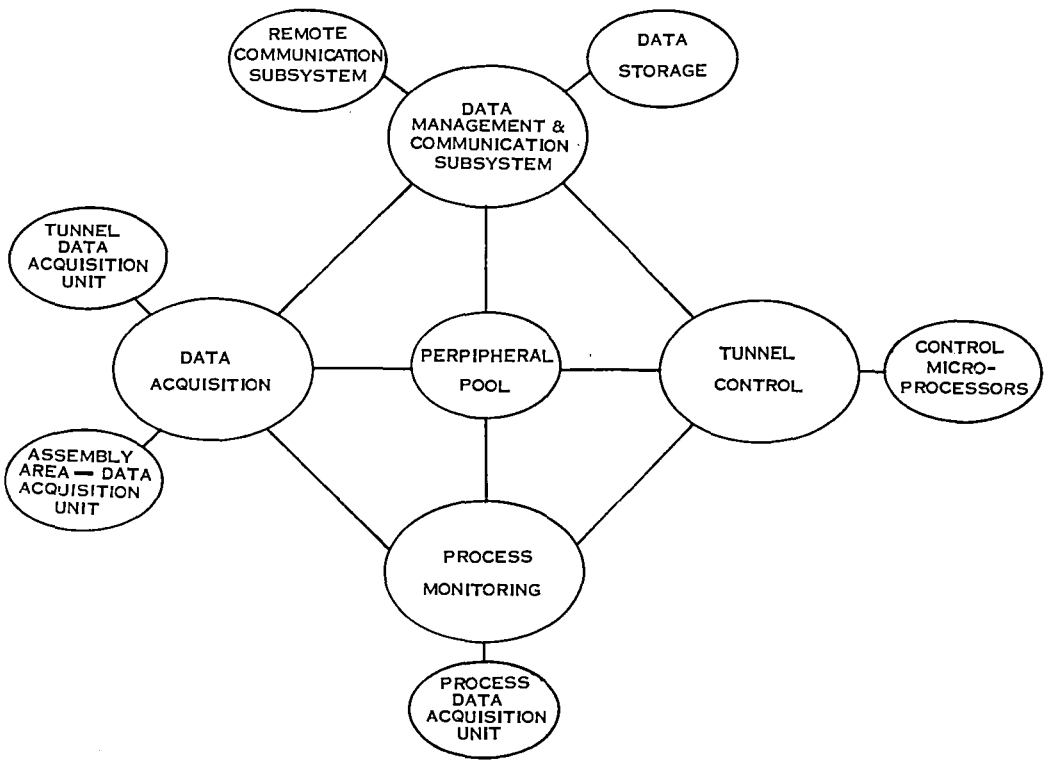

Figure 9.- NTF data system complex.

The system can provide up to 10 V dc excitation for the instrumentation channels. The system accepts analog, digital, and frequency (pulse-train) inputs. The tunnel data acquisition unit capacity is: 256 analog channels, 32 digital channels, and 1 frequency channel. The model assembly room data acquisition capability is: 64 analog channels, 16 digital channels, and 1 frequency channel. The lowest analog input range is from -4.096 to 4.096 mV and the highest range is from -8.386 to 8.386 V full scale. The digital inputs may be 5-digit Datex code, 24-bit binary, or 6-digit binary-coded decimal.

Multipressure measurements will utilize the electronically scanned pressure (ESP) measuring system. Up to 1024 model pressures may be measured with internally mounted modules. (See table I.)

TABLE I

DATA ACQUISITION CAPABILITY FOR NTF

Data characteristics	Type	Number of channels	
		Test section	Assembly room
Mean flow	Analog*	256	64
	Digital	32	16
Unsteady flow	Analog	14	14

*1024 pressure measurements.

Special recording analysis equipment may be connected to the model instrumentation through the instrumentation signal patching system.

Dynamic data.- A 14-track FM tape recorder is available to record time varying data with the capability to adapt additional time-history data acquisition equipment on request. Electronics are available for intermediate-band FM recording on tape at all standard carrier frequencies from 0.9437 kHz to 432 kHz. Two channels of direct-record electronics are available. Data recordings may be identified by a time code recorded on tape.

Software

Pre-test.- Prior to checking out a model in the model assembly area, a description of the model, its capabilities, the required instrumentation, special data acquisition and reduction, and a tentative test program should be defined. These data are used to schedule the use of various pieces of hardware as well as to provide inputs to the standard data acquisition and reduction software. Any special data acquisition or reduction requirements will be incorporated into the system for checkout, as far as is practical prior to tunnel entry.

Once a model is installed in the model assembly room, standard software is available to verify the strain-gauge balance integrity. The software will also acquire the data needed to calibrate the model instrumentation and curve-fit the data. The standard data reduction software is then used to provide the information needed to check for leaks in pressure measurement systems and to check for interference in models undergoing deadweight loading.

Special software may be transmitted to the NTF data system complex through the remote communications subsystem. Arrangements for use of this feature should be initiated at the pre-test conference. It should also be noted that the software complex can accept magnetic tapes written in ASCII (American

Standard Code for Information Interchange) or EBCDIC (Extended Binary Coded Decimal Interchange Code) and card decks punched in either 026 or 029 card-punch code.

On-line data processing.- On-line data processing programs will provide the test engineer with information needed to direct the research investigation. The data will be reduced to coefficient form for near real-time display in tabular and/or graphical format.

Final data processing.- Final data processing takes place off-line on a time-available basis. The data reduction program and the graphic display programs provide the same capabilities that the real-time programs provide. The data may be copied to magnetic tape for transmittal to remote computers.

INSTRUMENTATION

A pool of commonly used instrumentation will be maintained at the facility and will be made available to users upon request. This instrumentation will be largely strain-gage balances for use with aerodynamic models, pressure transducers, and accelerometers. In general, instrumentation unique to special user requirements will have to be supplied by the user unless it is provided through a special agreement with NASA.

NASA will review user furnished instrumentation and its use in a proposed test program prior to construction of the model. This review will cover material, design, construction techniques, and calibration methods. NASA reserves the right to approve the adequacy of instrumentation and devices furnished by the user.

Wiring Description

The model-to-tunnel wiring hookup is accommodated in the rear of the circular arc strut. Sufficient wiring is available to record data from a heavily instrumented force test (i.e., balances, accelerometers, on-board pressures, remotely driven components, fouling circuits, and thermocouples) and to support up to 1024 pressure measurements using an electronically scanned pressure (ESP) system.

The model instrumentation leads will normally be made up in the model assembly room with the Government-furnished plugs assembled to the model wiring aft of the sting. The plug-wiring bundle will be configured to feed through the 5.08-cm diameter passage in the roll mechanism.

Each assembly room will contain a receptical panel identical to the test-section interface panel at the rear of the strut. This will allow a functional check and calibration cycle for the test configuration using the data acquisition system prior to tunnel entry. After checkout, the leads will be unplugged, the model transported to the test section, and the leads connected to the tunnel wiring at the rear of the strut.

Thermocouples will be copper constantan. A 273 K reference junction is provided outside the pressure shell, and the referenced signal is routed to the control room.

Pressure Measurements

Multipressure measurements in the NTF will utilize the ESP measuring system. Two systems are available to the model and two to the model assembly rooms. Each system consists of a data acquisition and calibration unit (DACU), a calibration system, and up to 16 pressure-measuring modules of 32 ports each. Thus, the capability exists to measure up to 1024 model pressures with internally mounted pressure-measuring modules.

The nominal size of a current ESP module is 2.54 cm × 5.6 cm × 3.0 cm, not including the pressure tubing. Specific application of ESP modules to a given model will need to account for physical arrangement, thermal protection, and possible variations in geometry of advanced ESP modules.

Wiring is provided for a limited number of individual pressure transducers to be mounted in the model if desired (i.e., base and chamber pressures).

Force Measurements

Langley Research Center intends to have available, for general use, a number of six-component force balances that will have been temperature compensated and calibrated over a range of 340 to 78 K. (See fig. 10.) If user

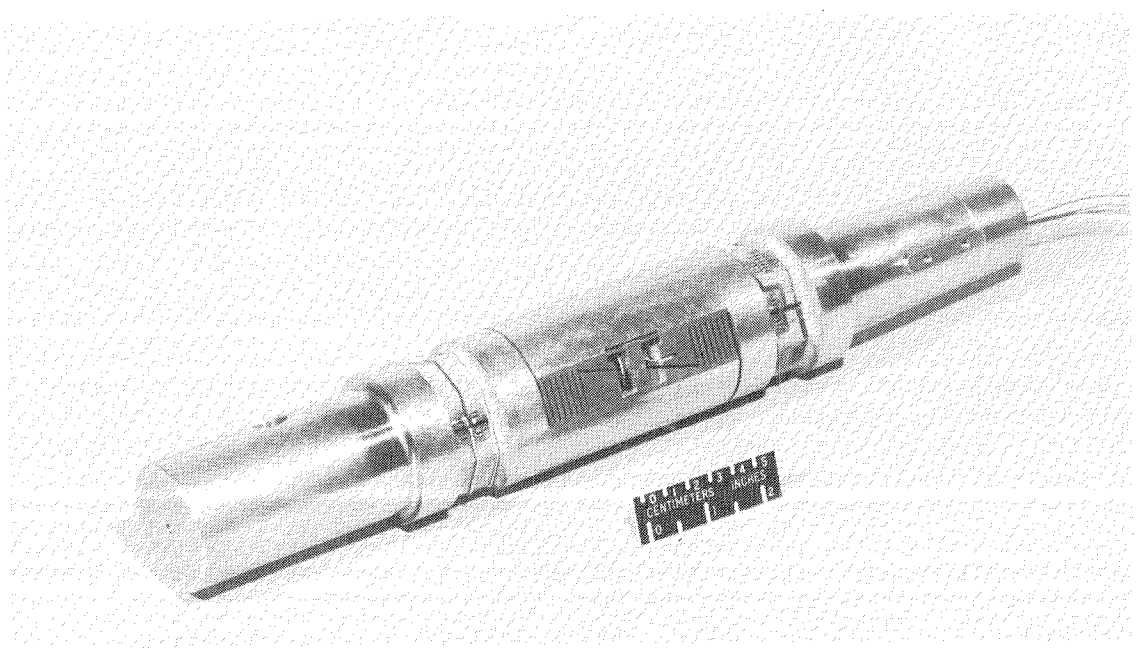

L-79-3750

Figure 10.- Six-component force balance.

balances are used in the NTF, where Langley is to reduce the force data, the balance should be forwarded at least 6 weeks in advance of the test. The balance will be checked for apparent strain values from 340 to 78 K and will be room-temperature calibrated for all first- and second-order interactions. Individual prime sensitivities will be obtained at cryogenic temperatures to determine sensitivity and first-order interaction changes. The user is responsible for the following:

1. Provisions for remotely monitoring the voltage at the balance

2. A rectangular calibration body for room-temperature calibration in addition to a stump for holding the balance during calibration

3. A calibration body capable of maintaining a cryogenic environment around the balance, either with liquid nitrogen or by some other means, while each balance load is applied individually

4. Providing a minimum of three thermocouples along the length of the balance

These requirements apply regardless of whether the balance is to be heated during the tunnel test or operated at tunnel temperature.

Environmental Requirements

Instrumentation used in the NTF must be designed to function in, or be protected from, the tunnel operating pressure and temperature. If controlling the thermal environment is desirable, remotely monitored and controlled, proportionally controlled dc heater circuits will be available from NASA. Specific thermal protection enclosures and heaters for instrumentation will be the responsibility of the user.

USER COST BREAKDOWN

User cost will be composed of a cost per shift of occupancy (occupancy cost) plus an actual cost for nitrogen and electrical power consumed during the user's test program. Detailed cost information should be obtained from the NTF manager at the Langley Research Center.

Occupancy Cost

This charge will begin when the tunnel test section is available for installation of the user's test hardware and will stop when the test hardware is removed and the tunnel test section is returned to its original condition.

Nitrogen Cost

A charge will be made for all nitrogen consumed during the approved test program. This total will encompass nitrogen used for cool-down, temperature changes, and pressure changes, as well as cooling during operation. The flow to the tunnel for all these effects will be metered, and the charge will be based on the LN_2 cost to NASA.

Electrical Power Cost

Electrical power cost will be metered for the entire program, and the user will be charged at the prevailing rate to NASA.

Special Charges

The user may be charged for certain additional services in support of the test that are obtained outside the NTF complex. Examples of these services are balance calibrations, machine-shop work, special data handling, etc.

OPERATIONAL CONSIDERATIONS

Run Time/Model-Access Time

As noted previously, the NTF is a continuous-flow tunnel except for high power conditions where run time is limited to about 10 minutes. The arc sector is designed for rates of travel up to 4° per second. For a pitch-pause mode of operation with a nominal arc-sector acceleration-deceleration cycle and about 1 second for force test instrumentation stabilization and data acquisition, a data polar will take from 1 to 2 minutes, depending on the number and arrangement of data points. Continuous-sweep operation will tend to minimize polar time while a pressure test with associated settling time will maximize polar time.

Access to the model for modifications between sets of polars will generally be via the model access tubes. The time required for model access and return to operation (excluding model service, which is a variable) is estimated to be on the order of 1.5 hours.

Power and Equipment Delays

The NTF is subject to delays in operation due to equipment breakdowns, electrical power delays, etc. Charges for occupancy time will not include test delays which are outside the control of the user.

Langley Research Center
National Aeronautics and Space Administration
Hampton, VA 23665
May 11, 1981

APPENDIX A

NASA

Management Instruction

NMI 1300.1
Date October 4, 1978

Responsible Office: RC/Space Technology Coordinating Office

Subject: DEVELOPMENT WORK FOR INDUSTRY IN NASA WIND TUNNELS

1. INCORPORATION

Policy and procedures for Development Work for Industry in NASA Wind Tunnels (14 CFR 1210) are set forth in Attachment A and are hereby incorporated in the NASA Directives System.

Administrator

ATTACHMENT
A: Development Work for Industry in NASA Wind Tunnels

DISTRIBUTION:

SDL-1

Published in the Federal Register under Title 14, Chapter V, Part 1210 (43 F.R. 45823-45825, October 4, 1978)

[7510-01]

Title 14—Aeronautics and Space

CHAPTER V—NATIONAL AERONAUTICS AND SPACE ADMINISTRATION

PART 1210—DEVELOPMENT WORK FOR INDUSTRY IN NASA WIND TUNNELS

Final Rules

AGENCY: National Aeronautics and Space Administration.

ACTION: Final rules.

SUMMARY: NASA currently does not have a prescribed policy and procedure for industry to request the use of NASA wind tunnels. These rules define the classes of NASA wind tunnels and the classes of industry work, and provide information on scheduling, occupancy time charges and test data transmitted.

DATE: October 4, 1978

ADDRESS: Director, Space Technology Coordinating Office, Code RC, Office of Aeronautics and Space Technology, National Aeronautics and Space Administration, Washington, D.C. 20546.

FOR FURTHER INFORMATION CONTACT:

Fred J. DeMeritte, telephone 202-755-8501.

SUPPLEMENTARY INFORMATION: On May 19, 1978, NASA published proposed rules (43 FR 21691-21693) to revise its rules and procedures for industry use of NASA wind tunnels. Interested parties were given until June 19, 1978, to submit comments or suggestions. No such comments or suggestions were received. However, NASA made the following changes to clarify the regulations: (1) In § 1210(c), line 6, after "wind tunnel" the words "(and the new 80- by 120-foot test section)" were added; and (2) In § 1210.3(a), line 4, "laboratory" was changed to "wind tunnel." With these two exceptions, the proposed rules are hereby adopted without change and are set forth below.

ROBERT A. FROSCH,
Administrator.

1. 14 CFR Part 1210 is revised in its entirety to read as follows:

PART 1210—DEVELOPMENT WORK FOR INDUSTRY IN NASA WIND TUNNELS

Secs.
1210.1 Introduction.
1210.2 General classes of work.
1210.3 Priorities and schedules.
1210.4 Company projects.
1210.5 Government projects.
1210.6 Test preparation and conduct.

AUTHORITY: 50 U.S.C. 511-515, 42 U.S.C. 2473(c) (5) and (6).

§ 1210.1 Introduction.

(a) *Authority.* The regulations, as they apply to the Unitary Wind Tunnel Plan facilities, are promulgated under authority of the Unitary Wind Tunnel Plan Act of 1949, Pub. L. 85-568, and codified in 50 U.S.C 511-515. This statute states that "The facilities authorized * * * shall be operated and staffed by the National Aeronautics and Space Administration but shall be available primarily to industry for testing experimental models in connection with the development of aircraft and missiles. Such tests shall be scheduled and conducted in accordance with industry's requirements, and allocation of laboratory time shall be made in accordance with the public interest, with proper emphasis upon the requirements of each military service and due consideration of civilian needs."

(b) *Unitary wind tunnel plan facilities.* The unitary wind tunnel plan facilities are the Ames Research Center 11- by 11-foot wind tunnel, 9- by 7-foot wind tunnel, and 8- by 7-foot wind tunnel; the Langley Research Center 4- by 4-foot high Mach number test section and the 4- by 4-foot low Mach number test section; and the Lewis Research Center 10- by 10-foot wind tunnel. These wind tunnels are operated by NASA for industry, NASA, the Department of Defense, and other Government agency projects.

(c) *National aeronautical facilities.* When completed, the national aeronautical facilities will be the national transonic facility at Langley Research Center and the modified 40- by 80-foot wind tunnel and the new 80- by 120-foot test section at Ames Research Center. The wind tunnels will be operated by NASA for industry, NASA, the Department of Defense, and other Government agency projects.

(d) *All other wind tunnels.* All other NASA wind tunnels will be used primarily for NASA research. However, all of these wind tunnels may be used for industry work when it is in the public interest either in joint programs with NASA or on a fee basis.

(e) *NASA policy.* All the projects to be performed in any of the NASA wind tunnels must be appropriate to the facility.

§ 1210.2 General classes of work.

Work for industry in the NASA facilities shall be divided into four project categories:

(a) *Company projects.* Includes work for industry on:

(1) Projects which are neither under contract nor supported by a letter of intent from a Government agency, and

(2) Company desired tests which are related to a project which is either under contract with or supported by a letter of intent from a Government agency, but are beyond the scope of the tests requested by the Government agency. A fee will be charged for these company projects.

(b) *Government projects.* Includes work for industry on projects which are either under contract with or supported by a letter of intent from a Government agency. The work must be requested by the Government agency. No fee will be charged for this type of work. (An exception is the national transonic facility for which a reimbursable policy is being developed.)

(c) *United States/foreign industry consortium projects.* This involves U.S. companies, which have formed a consortium or any other type of association with foreign companies, that desire tests on aerospace projects of joint or foreign interest. An application for work for such a consortium shall disclose the foreign interest in or anticipated foreign benefit from tests to be conducted and shall first be reviewed by the Director, International Affairs Division for consistency with current U.S. foreign policy and for compatibility with section 102 of the National Aeronautics and Space Act of 1958, as amended, prior to a final decision being reached on the application. A fee will be charged for these consortium projects unless, in the review procedure above, it is determined that Government agency cooperative sponsorship warrants a nonfee arrangement.

(d) *Foreign company projects.* Foreign company requests for wind tunnel use that are not related to U.S. Government or U.S. industry interests or programs will generally not be granted and will in no event be granted prior to a review, as required in paragraph (c) of this section, by the Director, International Affairs Division.

§ 1210.3 Priorities and schedules.

(a) *Priorities.* Unitary wind tunnels shall be available primarily to industry for development work. However, allocations of wind tunnel time shall be in accordance with the public interests, with proper emphasis upon the requirements of the military services and due consideration of civilian needs. Research work shall have priority in all other NASA facilities. Priority conflicts may be referred to the Associate Administrator for Aeronautics and Space Technology for review and final determination.

(b) *Schedules.* Schedules showing the allocation of testing time for Government projects and for company projects for unitary wind tunnels and other major wind tunnels will be established by the appropriate Center each month for the ensuing 3-month period and submitted to NASA Headquarters, Attn.: Code RA, by the first day of each month.

§ 1210.4 Company projects.

(a) *Initiation of company projects.* Company projects will be initiated by a letter to the Center Director followed by a conference between company and NASA representatives at the Center having responsibility for the facility proposed for the project. The company representatives will be required to explain the technical need for the project and why the NASA facility is required, as well as to define the extent of the test program, model and equipment requirements, and schedule. The Center shall maintain a file of all company requests and their disposition. The company may be required to provide a safety analysis report (SAR) to augment the wind tunnel SAR by describing potential hazards that the company test program, model and equipment may present to NASA facilities and personnel.

(b) *Scheduling of tests.* In scheduling time for company projects, the responsible NASA Center will take into account priorities as specified in § 1210.3 and all projects, including Government, company, and NASA research work relative to the national interest. Every reasonable attempt will be made to accommodate technically justifiable projects on as timely a basis as possible.

(c) *Fees for company projects.* The policy on charges for the use of NASA facilities is explained in NASA Management Instruction 9080.1A, dated November 21, 1975, titled, "Review, Approval and Imposition of User Charges." The fee imposed for a company project will cover all direct and indirect costs to NASA for the wind tunnel test.

(1) *Occupancy time charge.* (i) The occupancy time will be computed from the start of installation of the test article in the wind tunnel test section through the time on which the test article is removed from the test section and the test section restored to its original condition.

(ii) The occupancy time rate will be computed from the sum of the annual cost of the operating crew plus the estimated annual maintenance cost of the facility and will be determined in accordance with NASA Management Instruction 9080.1A.

(iii) The sum of the annual cost for the operating crew and the estimated annual maintenance cost divided by the number of operational weeks, depending on the facility, gives the weekly occupancy rate. This fee will be charged per basic week of 5 days, each day to be one-fifth week. The remaining weeks over the number of operational weeks for each year are the estimated maintenance reserve and holiday allowance; hence, no charge will be made for a holiday occurring during a test period.

(2) *Energy/fuel.* The charge for energy/fuel will be determined from the energy/fuel consumed during the tests and the actual cost to the NASA.

(3) *Data reduction.* The cost of data reduction and the data report will include labor, materials, computing machine rental, and appropriate indirect charges in accordance with NASA Management Instruction 9080.1A.

(4) *Cancellation of scheduled wind tunnel time.* Upon determination of a test schedule by the representatives of the company and of the NASA, it becomes the responsibility of the company to meet this schedule. A project may be canceled by the company without charge on 60 days' notice depending upon the readiness of succeeding projects. In the event subsequently scheduled work cannot be scheduled in lieu of the company's work, when canceled with less than 60 days' notice, the company shall be required to pay the occupancy time charge for the scheduled test period or for the period the facility test section is idle due to the cancellation, whichever results in the smaller charge. Curtailment of a project underway before the end of the scheduled test period may be made by the company. In this event, the company shall be required to pay the occupancy charge for the time used plus the unused scheduled time or for the idle time of the test section, whichever is the smaller.

(5) *High power requirements.* Unavailability of adequate power or economic considerations may, on occasion, cause delay or cancellation of high-powered test runs. The company shall cooperate with the facility staff in the scheduling of low-powered runs during periods when large blocks of power are unavailable. However, should rescheduling of test runs to accommodate power shortages be impractical, occupancy time charge credits will be made for time lost arising from such shortages. The basis for these credits, which will also be made for delays due to breakdown or malfunction of Government-furnished equipment or instrumentation, or due to other reasons beyond the control of the company, will be determined by each Center. The test period allotted for the program may be extended to offset delays in lieu of refund.

(d) *Test data transmittal.* The basic data for company projects will be transmitted to the requesting company without detailed analysis but with the necessary description of methods and techniques employed to permit proper interpretation of the data.

(e) *Proprietary rights.* In order to protect the trade secrets of companies, NASA will generate one set of final results, which will become the property of the company and be promptly transmitted to the company. If, subsequently, there is need to review the results, it will be the responsibility of the company to provide the NASA Center with copies of the resulting data on loan. Upon completion of the review, the data will be returned to the company. Should the company desire to maintain its trade secret rights in the data during the loan period, it should mark the data with a notice stating that the data shall not be used or disclosed other than for review purposes without prior written permission of the company. NASA, in turn, will protect that data covered by the notice which is protected under the law as a trade secret.

(f) *Test preparation and conduct* (see § 1210.6).

§ 1210.5 Government projects.

(a) *Initiation of Government projects.* Government projects shall be initiated through a conference of representatives from the contracted company, the sponsoring Government agency, and the staff of the NASA Center having responsibility for the facility proposed for the project. The purpose of the conference will be to establish the technical basis for the project and why the NASA facility is required as well as to define the extent of the test program, model and instrumentation requirements, and schedule. Upon concurrence of the Center Director, the sponsoring Government agency will submit a letter of request to NASA Headquarters for approval as well as clearing the request through the projects allocation and priority group (see paragraph (b) of this section). A safety analysis report (SAR) may be required to augment the wind tunnel SAR by describing the potential hazards that the project test program, model, and equipment may present to NASA facilities and personnel.

(b) *Projects allocation and priority group.* For coordinating Government projects, there is a group established jointly by the Department of Defense and the NASA. It consists of one representative each from the Air Force, Army, Navy, and NASA, competent to determine military priorities in the use of the NASA and other Government-owned facilities. The group is known as the aircraft, missile and propulsion projects allocation and priority group.

(c) *Scheduling of tests.* Government projects will be scheduled with due consideration of the priorities established by the projects allocation and priority group.

(d) *Test data transmitted.* The basic data for Government projects, without detailed analysis but with the necessary description of methods and techniques employed to permit the proper interpretation of the data, will be transmitted to the company for whom the tests were made and the sponsoring Government agency. Further disclosure by NASA of the test results will be made only with the prior concurrence of the sponsoring Government agency.

October 4, 1978

45825

§ 1210.6 Test preparation and conduct.

(a) *Programing by user.* The user will be given the greatest possible freedom within the objectives of the scheduled program to obtain the precise information it requires, to determine the sequence and number of test runs to be made, and to make modifications to the program arising from the results currently being obtained, subject to requirements of safety, energy conservation, practicability, and the total time assigned.

(b) *Instrumentation.* Each facility will provide basic instrumentation suitable for the test range of the respective facility and computing equipment for the reduction of test data. Information will be furnished for each facility on the permissible size of model, standard balances, safety margins to be used in the construction of models, model mounting details, and other pertinent factors. If the basic instrumentation furnished by the facility does not meet the test requirements, the company will provide suitable instrumentation which will generally be calibrated by the facility staff to insure accuracy of measurement. This instrumentation will be made available sufficiently in advance of the test date to accomplish the calibration. Serious delays arising from inaccuracies in user supplied instrumentation, if occurring during the scheduled test period, may result in reassignment of the position of the tests on the facility schedule. Detailed specifications and arrangements for special instrumentation will be established by mutual agreement. All model criteria required by the facility for safety consideration including the necessary drawings and stress analyses of the articles to be tested will be furnished at a time specified by the facility staff for their use in preparing for the test. The user will also be required to furnish all information necessary to prepare the data reduction software program at a date specified by the facility staff.

(c) *Test program.* All tests will be conducted under NASA supervision and by NASA personnel or by NASA support service contractor personnel unless approved otherwise by the facility manager. By agreement between the user (company representatives and the requesting agency) and the Center staff, changes in the test program may be made within the objectives of the scheduled program if time is available. When tests are not totally conducted by NASA personnel or by NASA support service contractor personnel, the NASA Field Installation Safety Officer shall verify that the company personnel are fully cognizant of facility safety problems and operations. A current SAR on the facility shall be available to the company personnel for review.

(d) *Handling test data.* The NASA staff will be responsible for obtaining all test data, its reduction to suitable coefficient form, and the accuracy of the final data, but the NASA will assume no responsibility for the interpretation of the data by others. Transmittal of the data will be made as rapidly as possible. For company projects, the data will be transmitted as directed by the company. The data for Government projects will be transmitted simultaneously to the sponsoring Government agency and the contractor, unless otherwise directed by the sponsoring agency.

(e) *Shops and office space.* During the conduct of user testing, the NASA will make available machine tools in the facility shop and desk space to the user whose projects are under tests.

(f) *Company furnished personnel.* User personnel furnished for each project will be agreed upon between the user and facility staff prior to the test.

[FR Doc. 78-27945 Filed 10-3-78; 8:45 am]

APPENDIX B

NATIONAL TRANSONIC FACILITY ESTIMATED

PERFORMANCE MAPS - MACH NUMBERS 0.10 TO 1.20

Blair B. Gloss and Donna Nystrom
NASA Langley Research Center

Figures B1 to B12 show the estimated performance map for the National Transonic Facility at Mach numbers from 0.10 to 1.20. The following symbols are used in the figures:

$\bar{c}$	reference length
M_l	local Mach number
p_t	stagnation pressure, atm (atm = 101.3 kPa)
$R_{\bar{c}}$	Reynolds number based on $\bar{c}$ = 0.25 m
T_t	stagnation temperature, K

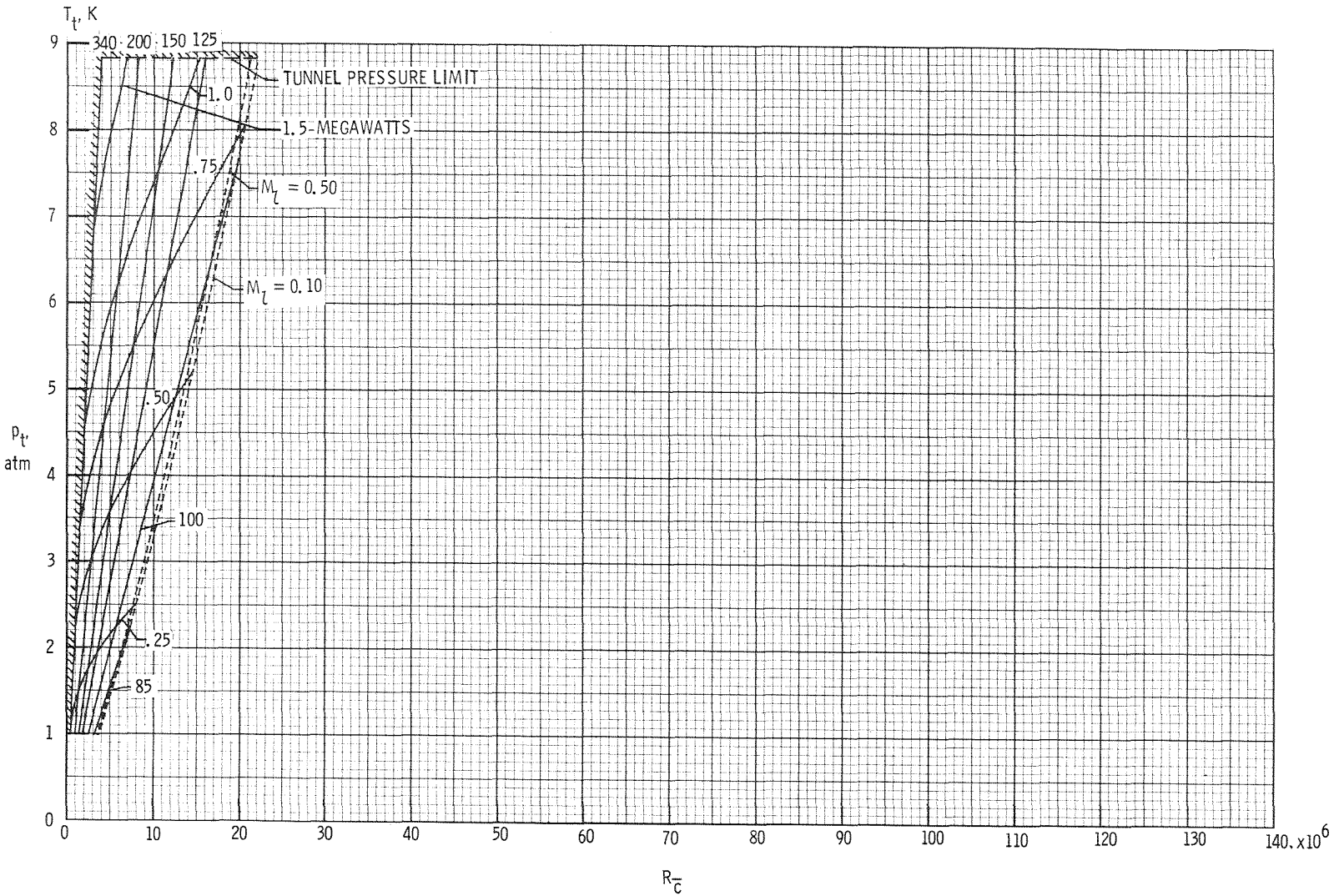

Figure B1.- Estimated NTF performance map for free-stream Mach number of 0.10.

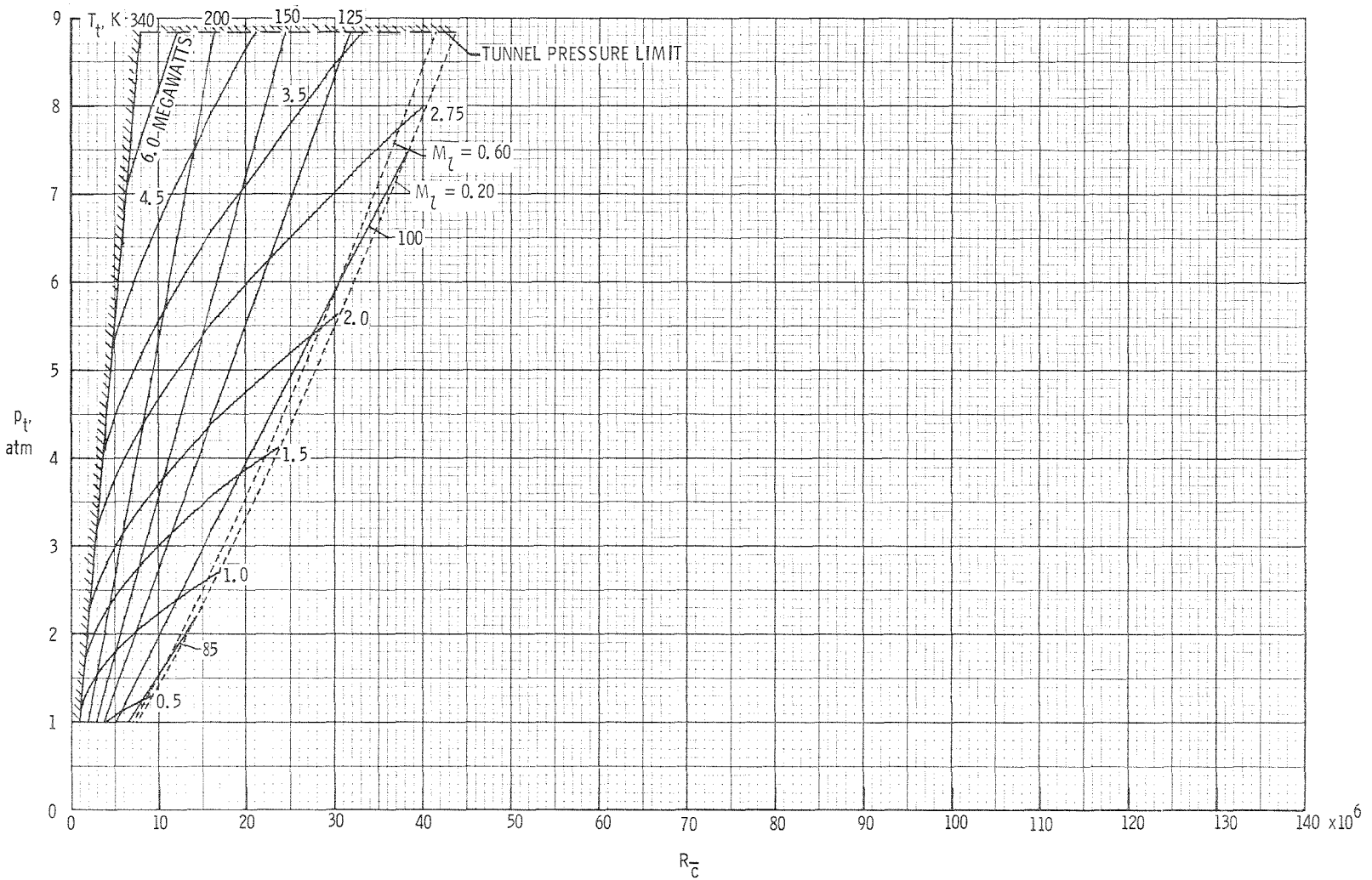

Figure B2.- Estimated NTF performance map for free-stream Mach number of 0.20.

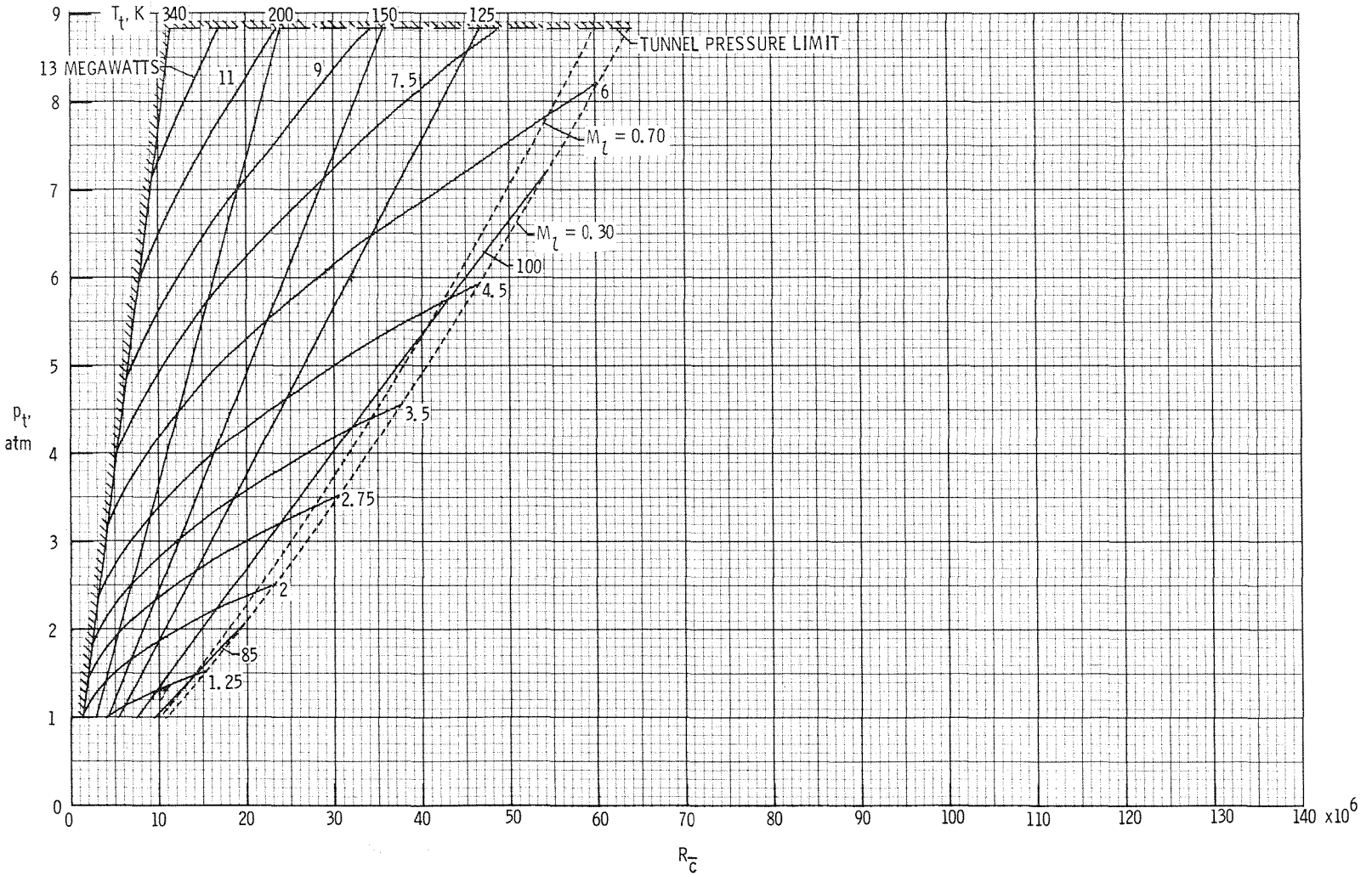

Figure B3.- Estimated NTF performance map for free-stream Mach number of 0.30.

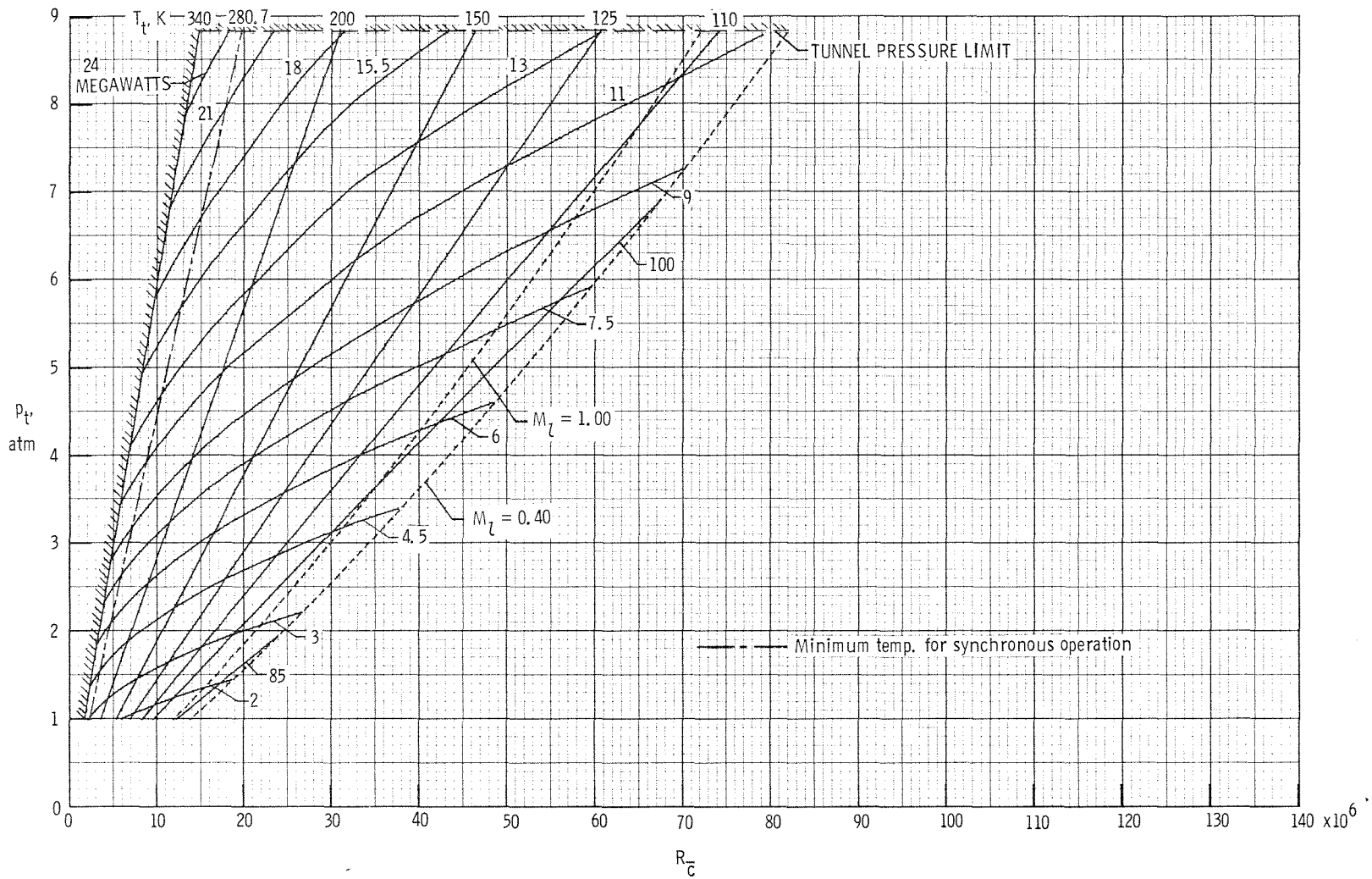

Figure B4.- Estimated NTF performance map for free-stream Mach number of 0.40.

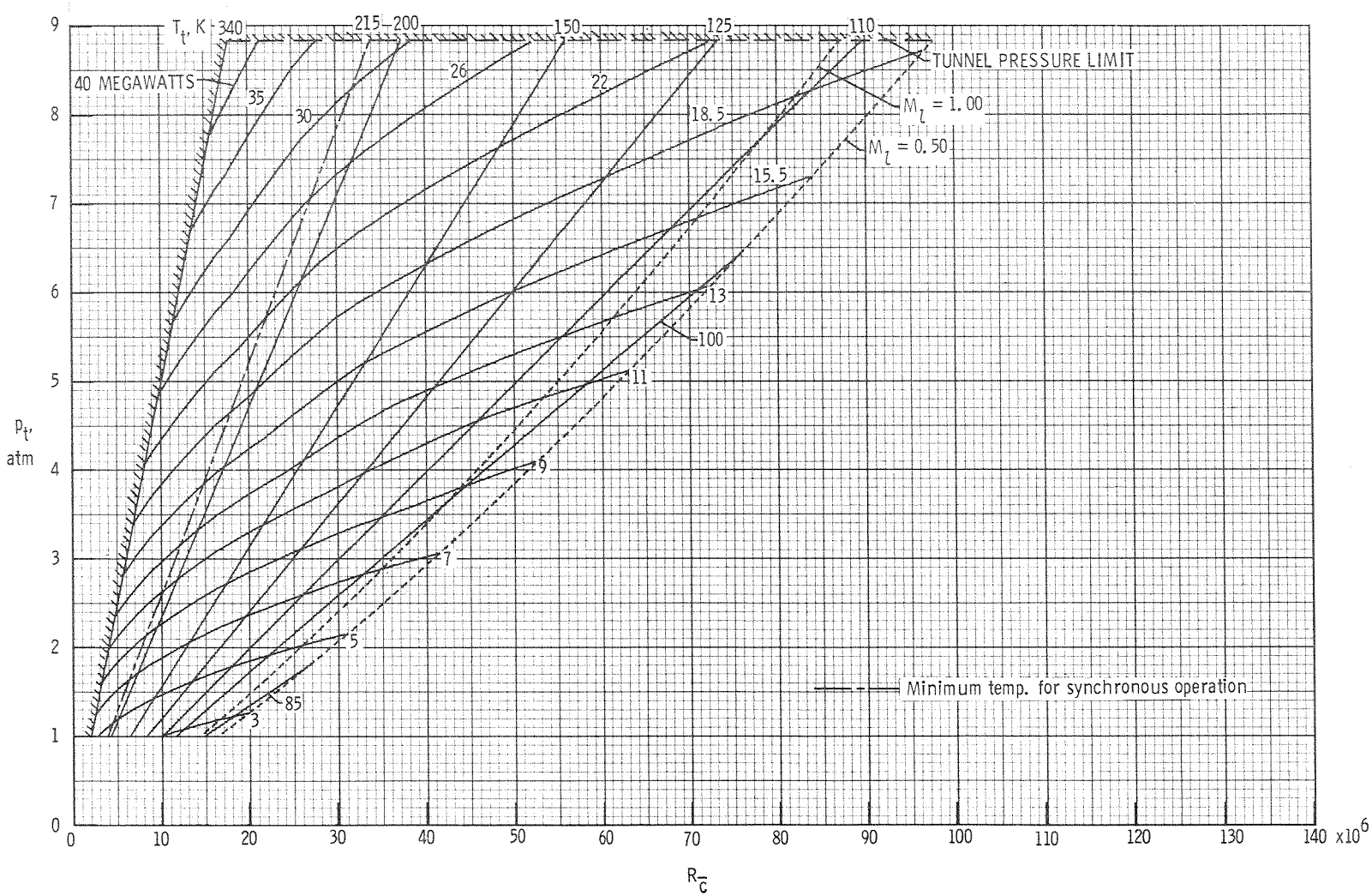

Figure B5.- Estimated NTF performance map for free-stream Mach number of 0.50.

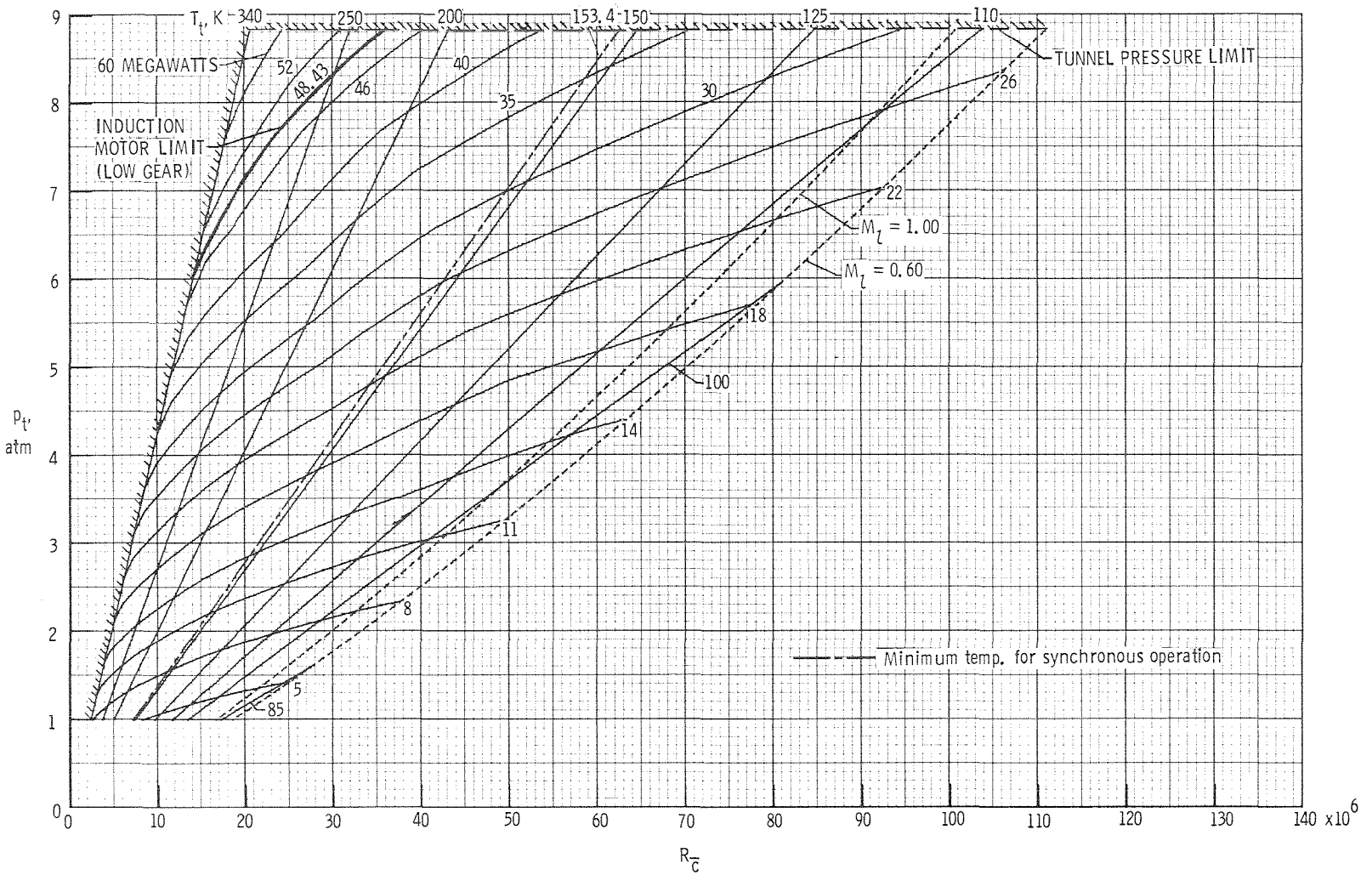

Figure B6.- Estimated NTF performance map for free-stream Mach number of 0.60.

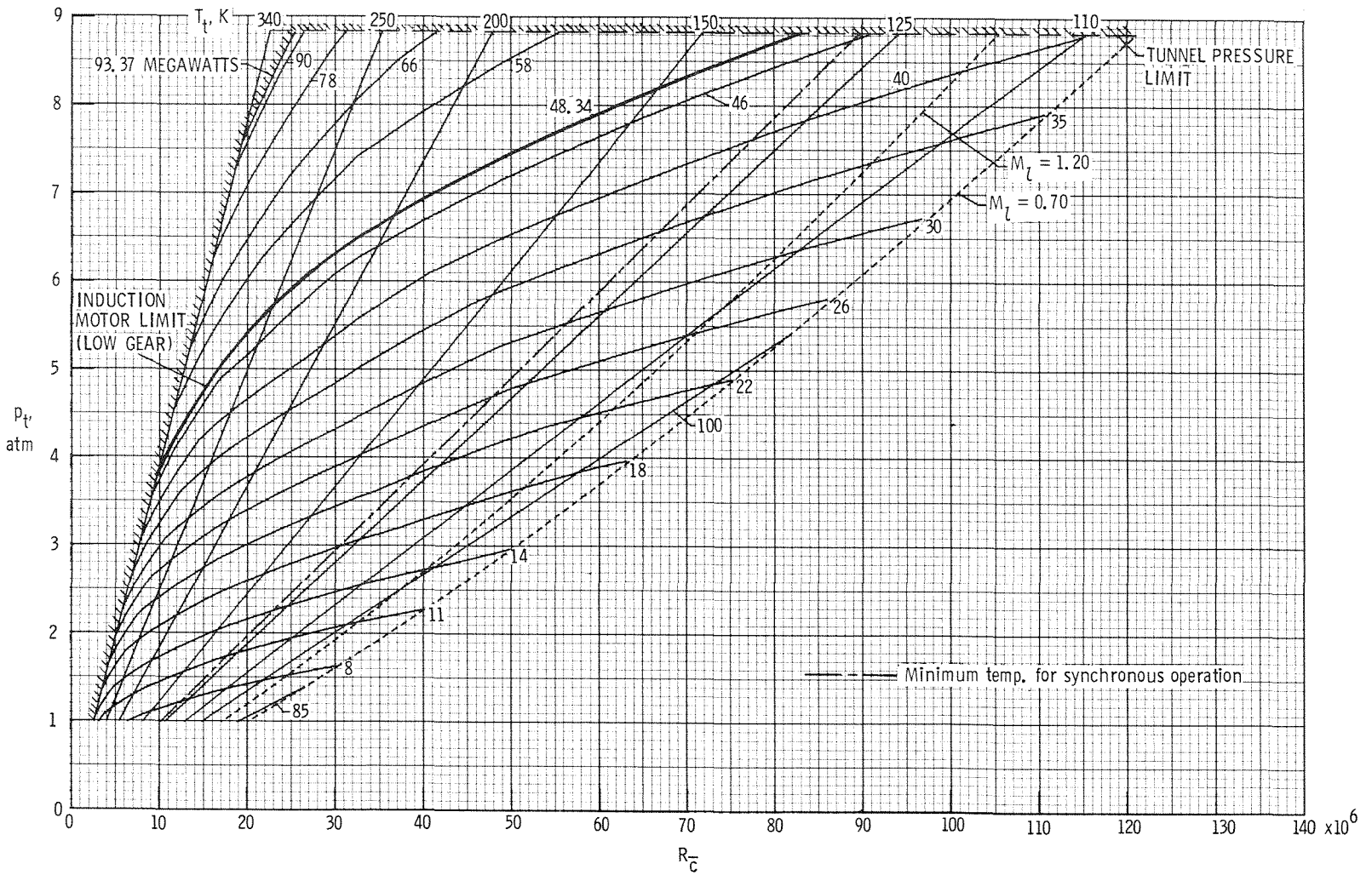

Figure B7.- Estimated NTF performance map for free-stream Mach number of 0.70.

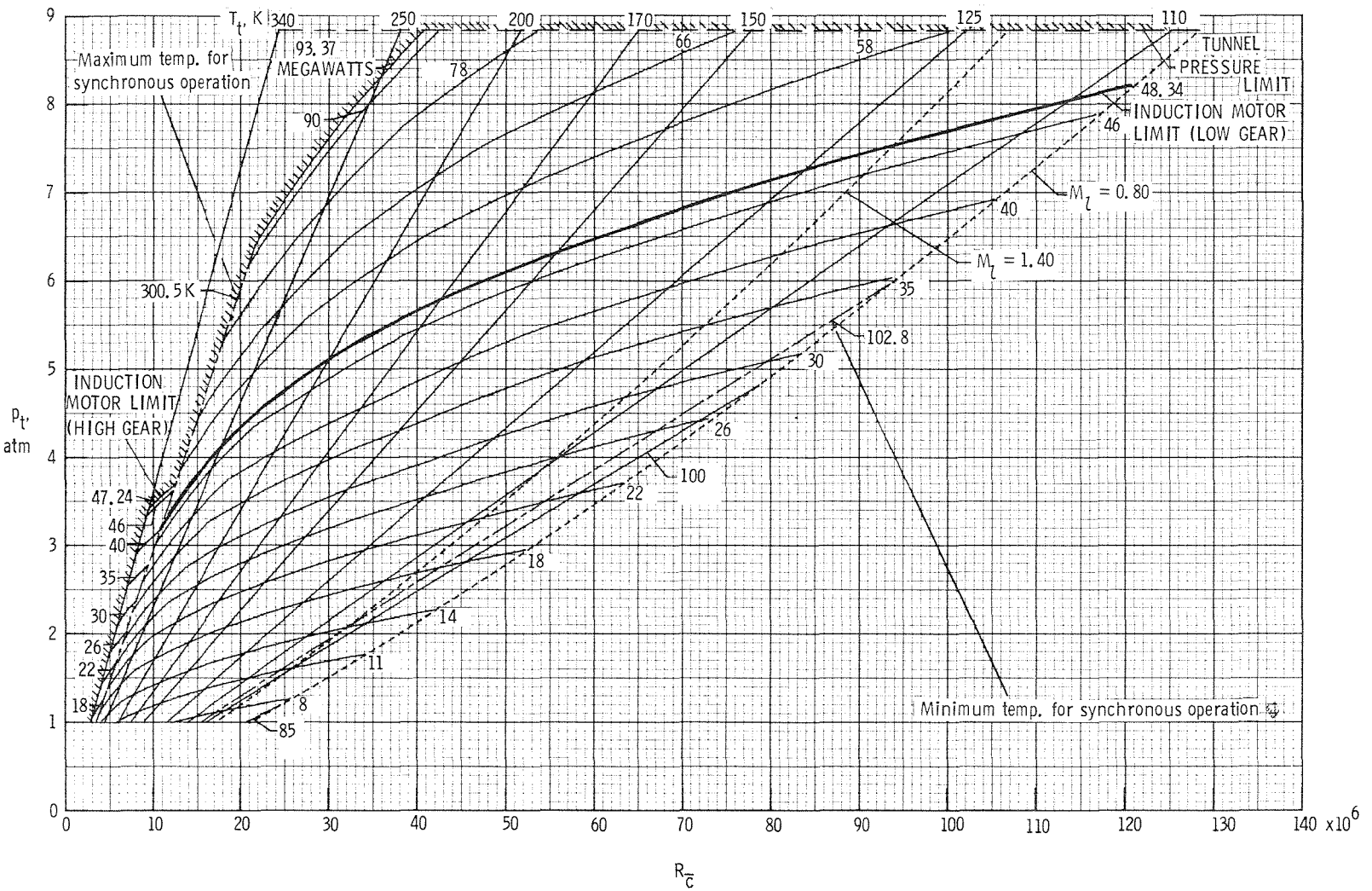

Figure B8.- Estimated NTF performance map for free-stream Mach number of 0.80.

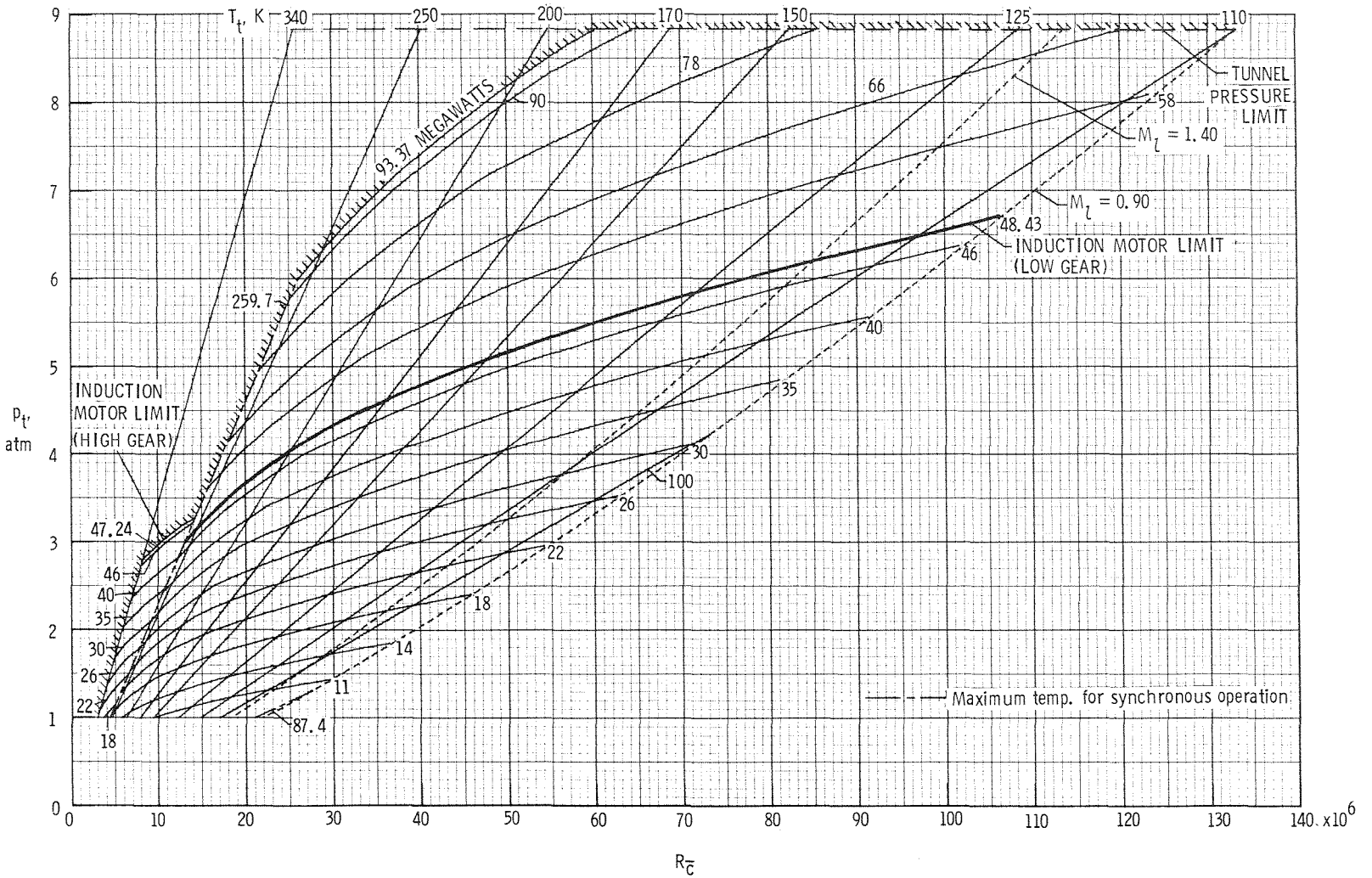

Figure B9.- Estimated NTF performance map for free-stream Mach number of 0.90.

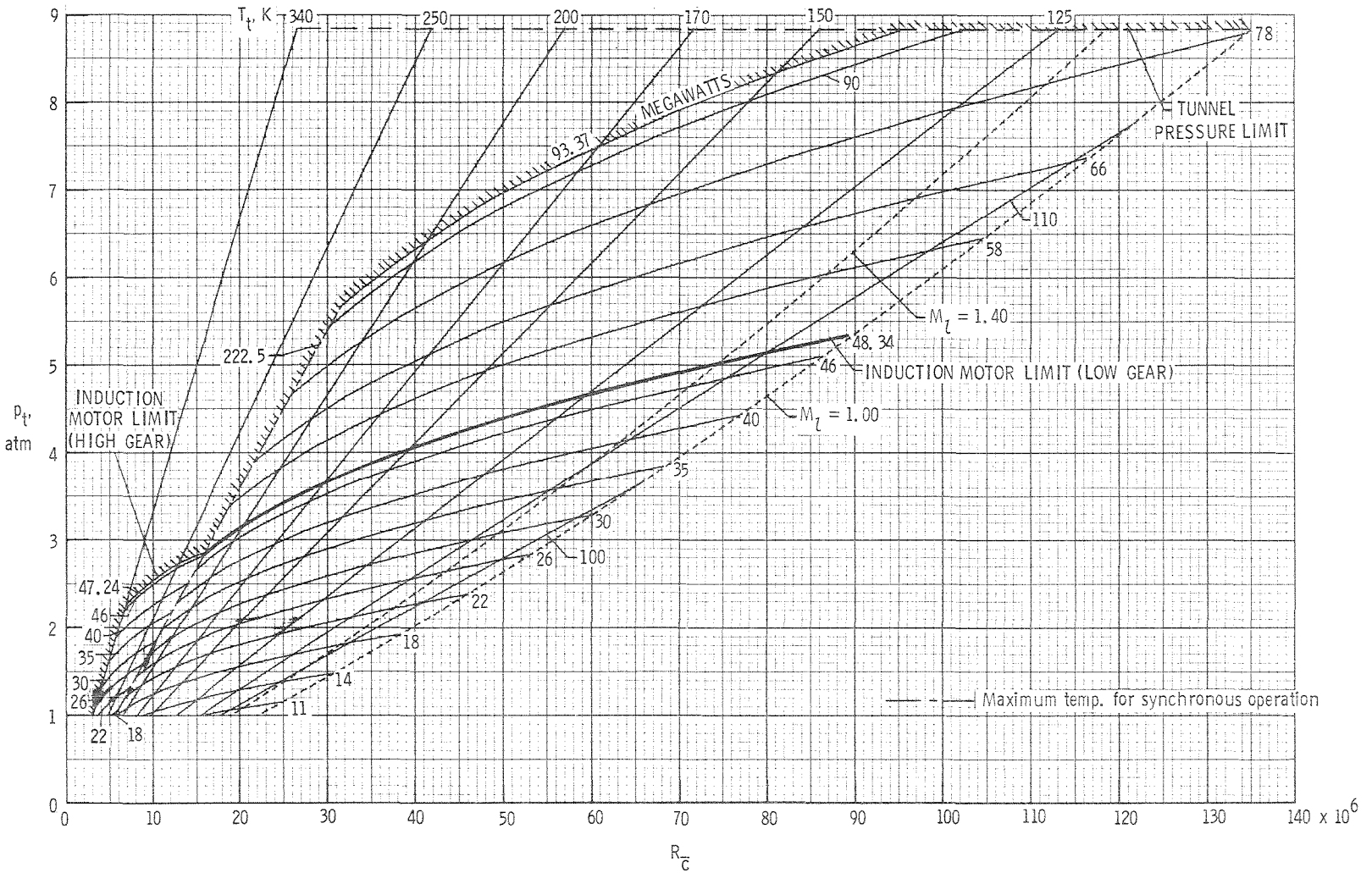

Figure B10.- Estimated NTF performance map for free-stream Mach number of 1.00.

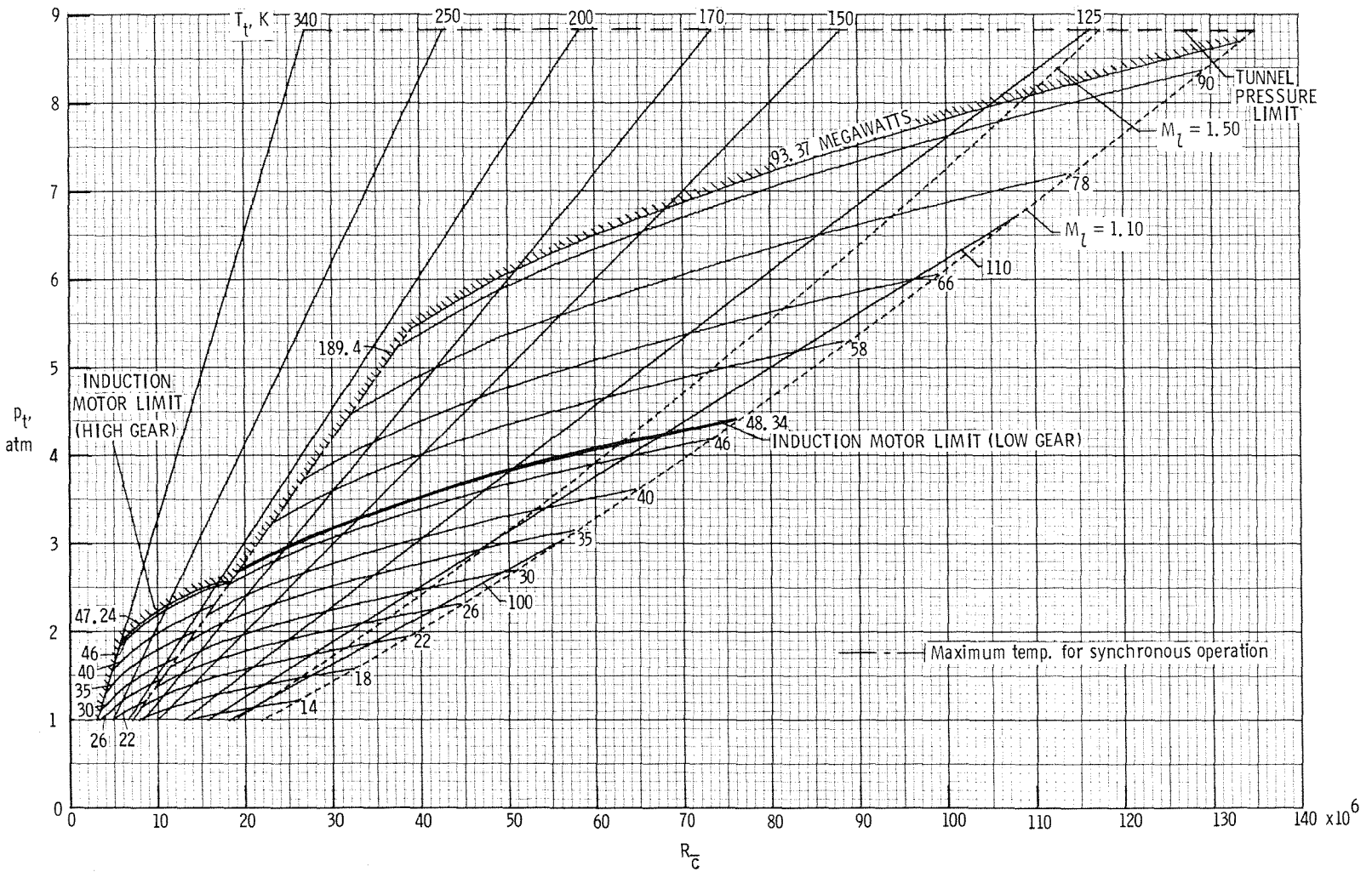

Figure B11.- Estimated NTF performance map for free-stream Mach number of 1.10.

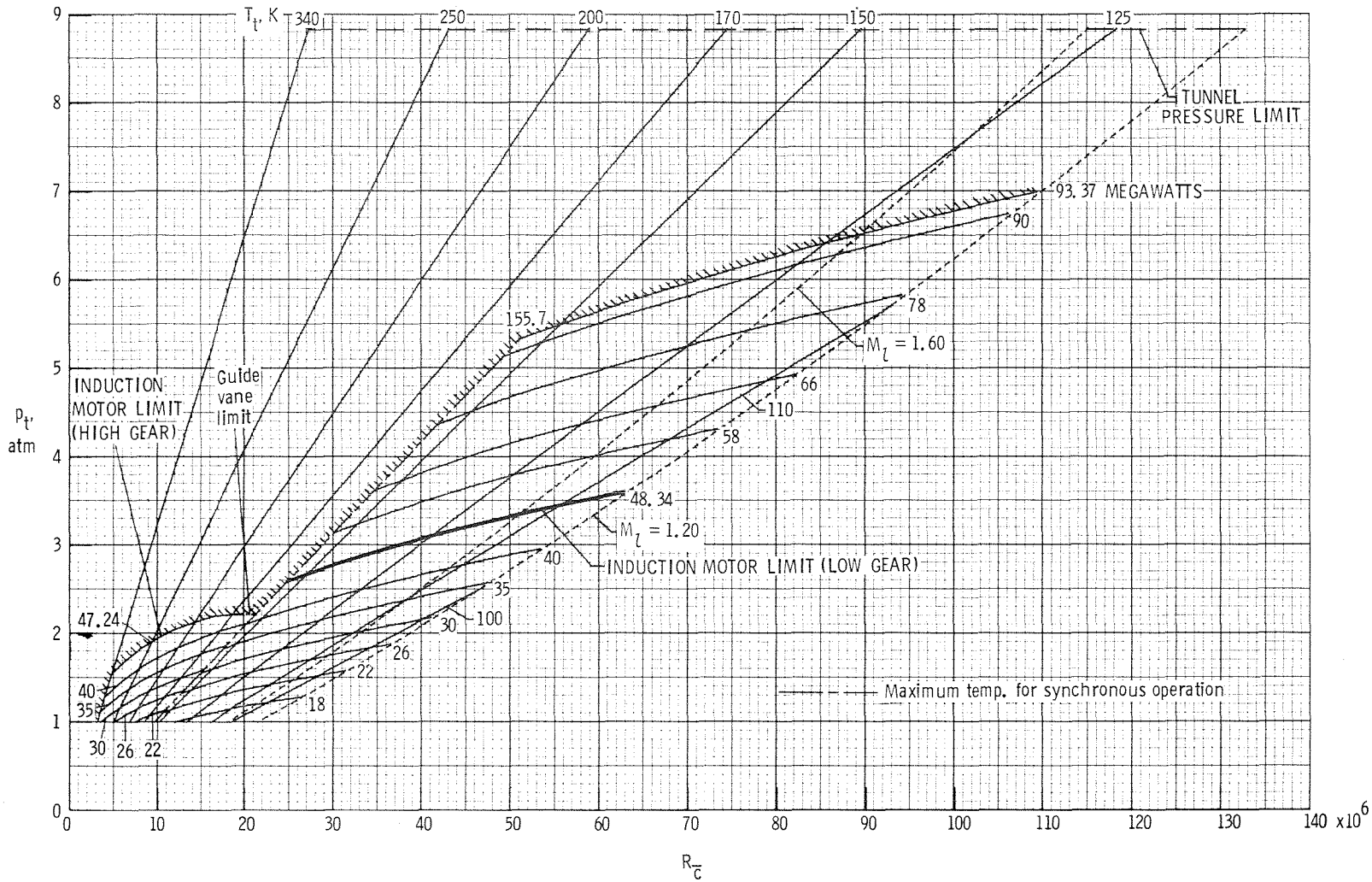

Figure B12.- Estimated NTF performance map for free-stream Mach number of 1.20.

REFERENCES

1. McKinney, Linwood W.; and Howell, Robert R.: The Characteristics of the Planned National Transonic Facility. Proceedings - AIAA 9th Aerodynamic Testing Conference, June 1976, pp. 176-184.

2. Howell, Robert R.; and McKinney, Linwood W.: The U.S. 2.5-Meter Cryogenic High Reynolds Number Tunnel. ICAS Paper No. 76-04, Oct. 1976.

3. Nicks, Oran W.; and McKinney, Linwood W.: Status and Operational Characteristics of the National Transonic Facility. AIAA Paper 78-770, Apr. 1978.

4. Howell, Robert R.: The National Transonic Facility: Status and Operational Planning. A Collection of Technical Papers - AIAA 11th Aerodynamic Testing Conference, Mar. 1980, pp. 1-9. (Available as AIAA-80-0415.)

5. Tobler, R. L.: Materials for Cryogenic Wind Tunnel Testing. NBSIR 79-1624, May 1980. (Available as NASA CR-165716.)

1. Report No.	2. Government Accession No.	3. Recipient's Catalog No.
NASA TM-83124		

4. Title and Subtitle	5. Report Date
GUIDE FOR USERS OF THE NATIONAL TRANSONIC FACILITY	July 1981
	6. Performing Organization Code 505-31-63-04
7. Author(s) Dennis E. Fuller	8. Performing Organization Report No. L-14077
	10. Work Unit No.
9. Performing Organization Name and Address NASA Langley Research Center Hampton, VA 23665	11. Contract or Grant No.
	13. Type of Report and Period Covered Technical Memorandum
12. Sponsoring Agency Name and Address National Aeronautics and Space Administration Washington, DC 20546	14. Sponsoring Agency Code

15. Supplementary Notes

Appendix B by Blair B. Gloss and Donna Nystrom

16. Abstract

The National Transonic Facility (NTF) is a fan-driven, closed-circuit, continuous-flow, pressurized wind tunnel. The test section is 2.5 m × 2.5 m and 7.62 m long with a slotted-wall configuration. The NTF will have a Mach number range from 0.2 to 1.2, with Reynolds numbers up to 120×10^6 at Mach 1 (based on a reference length of 0.25 m). The pressure range for the facility will be from 1 to about 9 bars (1 ban = 100 kPa), and the temperature can be varied from 340 to 78 K. This report provides potential users of the NTF with the information required for preliminary planning of test programs and for preliminary layout of models and model supports which may be used in such programs.

17. Key Words (Suggested by Author(s))	18. Distribution Statement
Wind tunnel Transonic Cryogenic	Unclassified - Unlimited Subject Category 09

19. Security Classif. (of this report)	20. Security Classif. (of this page)	21. No. of Pages	22. Price
Unclassified	Unclassified	39	A03

For sale by the National Technical Information Service, Springfield, Virginia 22161

NASA-Langley, 1981

End of Document