N O T I C E

THIS DOCUMENT HAS BEEN REPRODUCED FROM MICROFICHE. ALTHOUGH IT IS RECOGNIZED THAT CERTAIN PORTIONS ARE ILLEGIBLE, IT IS BEING RELEASED IN THE INTEREST OF MAKING AVAILABLE AS MUCH INFORMATION AS POSSIBLE

JPL NO. 9950-596

DRL-113 DOE/JPL-955269-80/6

DRD-SE-4 Distribution Category UC-63

(NASA-CR-163764) LOW-COST SOLAR ARRAY PROJECT TASK 1: SILICON MATERIAL. GASEOUS MELT REPLENISHMENT SYSTEM Final Report, Apr. 1979 - Oct. 1980 (Energy Materials Corp., Harvard, Mass.) 60 p HC A04/MF A01 G3/44 N81-33608 Unclas 27652

Low-Cost Solar Array Project
Task I - Silicon Material

Gaseous Melt Replenishment System

Final Report
April 1979 - October 1980

JPL Contract 955269

by

D.N. Jewett
H.E. Bates
D.M. Hill

OCT 1981
RECEIVED
NASA STI FACILITY
ACCESS DEPT.

Energy Materials Corporation
Ayer Road
Harvard, Massachusetts 01451

The JPL Low-Cost Silicon Solar Array Project is sponsored by the U.S. Department of Energy and forms part of the Solar Photovoltaic Conversion Program to initiate a major effort toward the development of low-cost solar arrays. This work was performed for the Jet Propulsion Laboratory, California Institute of Technology by agreement between NASA and DOE.

DRL-113

DRD-SE-4

DOE/JPL-955269-80/6

Distribution Category UC-63

Low-Cost Solar Array Project
Task I - Silicon Material

Gaseous Melt Replenishment System

Final Report
April 1979 - October 1980

JPL Contract 955269

by

D.N. Jewett
H.E. Bates
D.M. Hill

Energy Materials Corporation
Ayer Road
Harvard, Massachusetts 01451

The JPL Low-Cost Silicon Solar Array Project is sponsored by the U.S. Department of Energy and forms part of the Solar Photovoltaic Conversion Program to initiate a major effort toward the development of low-cost solar arrays. This work was performed for the Jet Propulsion Laboratory, California Institute of Technology by agreement between NASA and DOE.

TABLE OF CONTENTS

		Page
1.	SUMMARY	1
2.	INTRODUCTION	3
	2.1 Objective	3
	2.2 Approach	3
3.	TECHNICAL BACKGROUND	5
	3.1 Reactor Design	5
	3.1.1 Basis	5
	3.1.2 Operation	5
	3.1.3 Specific Vessel Designs	9
	3.1.4 Heater Design	12
	3.2 Support System Designs	13
	3.2.1 Materials Handling System	13
	3.2.2 Pressure Equalization System	16
	3.2.3 Vessel Support System	16
	3.2.4 Material Sampling & Waste Treatment Systems	17
	3.2.5 Power Control Box & Miscellaneous Systems	18
4.	TECHNICAL RESULTS	20
	4.1 Run Summary	20
	4.2 General Test Run Descriptions	20
	4.3 Data	23
	4.4 Discussion of Results	23
5.	ECONOMIC ANALYSIS OF GMR REACTOR USING IPEG	31
	5.1 Input Values	31
	5.1.1 QUAN	31
	5.1.2 EQUIP	31
	5.1.3 SQ. FT.	32
	5.1.4 DLAB	32
	5.1.5 MATS	32
	5.1.6 UTIL	33
	5.2 Price Per Kilogram Silicon	33
	5.3 Cost Comparison of GMR Production to the Conventional Siemens Process	34
6.	CONCLUSIONS AND RECOMMENDATIONS	37

TABLE OF CONTENTS

	Page
7. SUPPLEMENT	38
7.1 Silicon Transfer Tube	38
7.1.1 Introduction	38
7.1.2 Detailed Descriptions & Drawings	38
7.1.3 Experimental Tests	40
7.1.4 Conclusions	41
7.2 Shotting Tower	42
7.2.1 Introduction	42
7.2.2 Detailed Descriptions & Drawings	43
7.2.3 Results	45
8. REFERENCES	47
9. APPENDICES	48
9.1 Reactor Design Calculations	48
9.1.1 Deposition Surface Requirement Estimate	48
9.1.2 Power Requirement Estimates	52
9.2 Heater Design Calculations	52
9.3 Primary Heat Exchanger Design Calculations	54

LIST OF FIGURES

		Page
Figure 1a	Schematic Diagram of "Poly" Reaction Chamber	6
Figure 1b	Cross-sectional View of Furnace Chamber Showing Heaters, Insulation and Support Arrangements	7
Figure 2	Sectional Plan View (Schematic) of Initial Reactor Geometries	11
Figure 3	Experimental Apparatus	19
Figure 4	6" Diameter Reaction Vessels 1-4 Top View Schematic	21
Figure 5	6" Diameter Reaction Vessels 5-7 Top View Schematic	21
Figure 6	Silicon Transfer Tube	39
Figure 7	Schematic of Modified Shotting Tower	44
Figure 8	Shot Formed in Cold Methanol Shotting Tower	46
Figure 9	Conversion Efficiency from $SiHCl_3$ at Various H_2 Dilutions as a Function of Temperature	50
Figure 10	Total Gas Flow Rate to Yield 0.5kg/hr of Si at Various H_2 Dilutions of $SiHCl_3$ as a Function of Reaction Temperature	51

1. SUMMARY

The objective of this program was to demonstrate the operation of a novel, efficient silicon production technique. The essentials of the method comprised chemical vapor deposition of silicon, by hydrogen reduction of chlorosilanes, on the inside of a quartz reaction vessel having large internal surface area. The system was designed to allow successive deposition-melting cycles, with silicon removal being accomplished by discharging the molten silicon. The liquid product would be suitable for transfer to a crystal growth process, casting into solid form, or production of shots. A scaled-down prototype reactor demonstrated single pass conversion efficiency of 20% and deposition rates and energy consumption better than conventional Siemens reactors, via deposition rates of 365μ/hr. and electrical consumption of 35 Kwhr/kg of si produced. This reactor had an internal surface of 2750cm^2 and volume of 4580cm^3. The highest production rate achieved was 312gm/hr. in a larger reactor having 10,065cm^2 internal surface area and 16,000cm^3 volume at an energy consumption rate of 43 Kwhr/kg.

Successful, sequential operation of the reverse U-bend trap seal ("U-tube") was also demonstrated. This feature, acting as a 1400°C valve, permits successive deposition-meltout cycles in the reactor.

Problems remaining to be solved with the system

include:

1. Plugging of the reactor outlet tube by silicon halide polymers and by silicon monoxide generated during the melt-down.

2. Maximization of regenerative heat exchange between reactants and products, thus improving conversion levels.

2. INTRODUCTION

2.1 Objective

The objective of this program was to develop an improved silicon production reactor with periodic batch delivery of product to either a casting or shotting process or, through a liquid silicon transfer system, directly to a crystal growth system.

2.2 Approach

The processes and equipment are scaled such that a modest investment can make available to the Czochralski crystal grower a low cost source of silicon. In addition, the smaller scale enabled commissioning an operating system without large capital investments, guarantees of markets, etc.

The chemical reactions are those in commercial usage now. The major innovation is in reactor design which allows a higher productivity of silicon. The reactor has been conservatively sized on the basis of epitaxial deposition rates. Such a reactor, typically, can produce silicon rapidly enough to keep pace with 10cm or 12cm diameter Czochralski crystal growth operating in a semi-continuous mode.

The major factors, subsequent to the innovative reactor design, which will lower the cost of silicon production are: 1) the effective utilization of the energy

required to bring the reactants to the operational temperature and 2) the separation of the by-products for recycle, sale, or disposal.

3. TECHNICAL BACKGROUND

3.1 Reactor Design

3.1.1 Basis

The reactor is based upon 1) experiments showing silicon deposition in quartz tubes, 2) the Siemens process, and 3) data by Hunt, Sirtl, and Sawyer[1,2] Si-H-Cl equilibrium. Based on design calculations (shown in Appendix section 9.1) the reactor is expected to produce silicon at the rate of 0.5kg/hr. at 20% conversion. The system is designed keeping in view 1) the requirement of a dense silicon product, 2) high energy efficiency and 3) an extended reactor life compared to quartz tube experiments.

3.1.2 Operation

A schematic cross-section of the reactor assembly is shown in Figure 1a. A cross-sectional view of the actual reactor vessel and the heating and support system is shown in Figure 1b. Polycrystalline silicon will be deposited on the inside walls of a resistively heated, multi-walled fused silica reaction chamber by H_2 reduction of $SiHCl_3$. After sufficient silicon has been produced, the reactor will be flushed with argon and the silicon melted out of the reactor into a receptacle such as a Czochralski crystal growth crucible or any other desired container. The reactor can then be

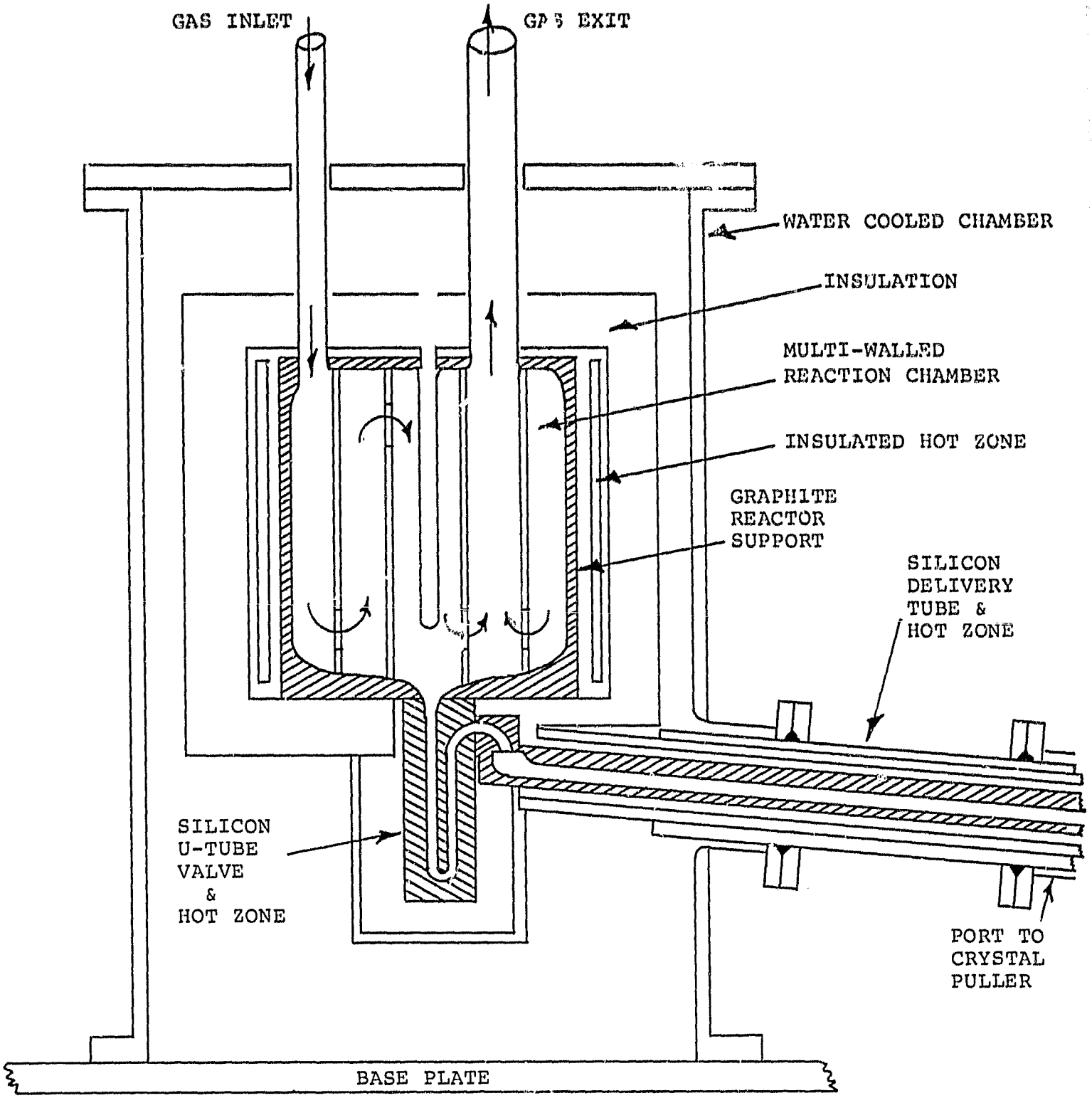

Figure 1a

Schematic Diagram of
"Poly" Reaction Chamber

(Scale ≈5:1)

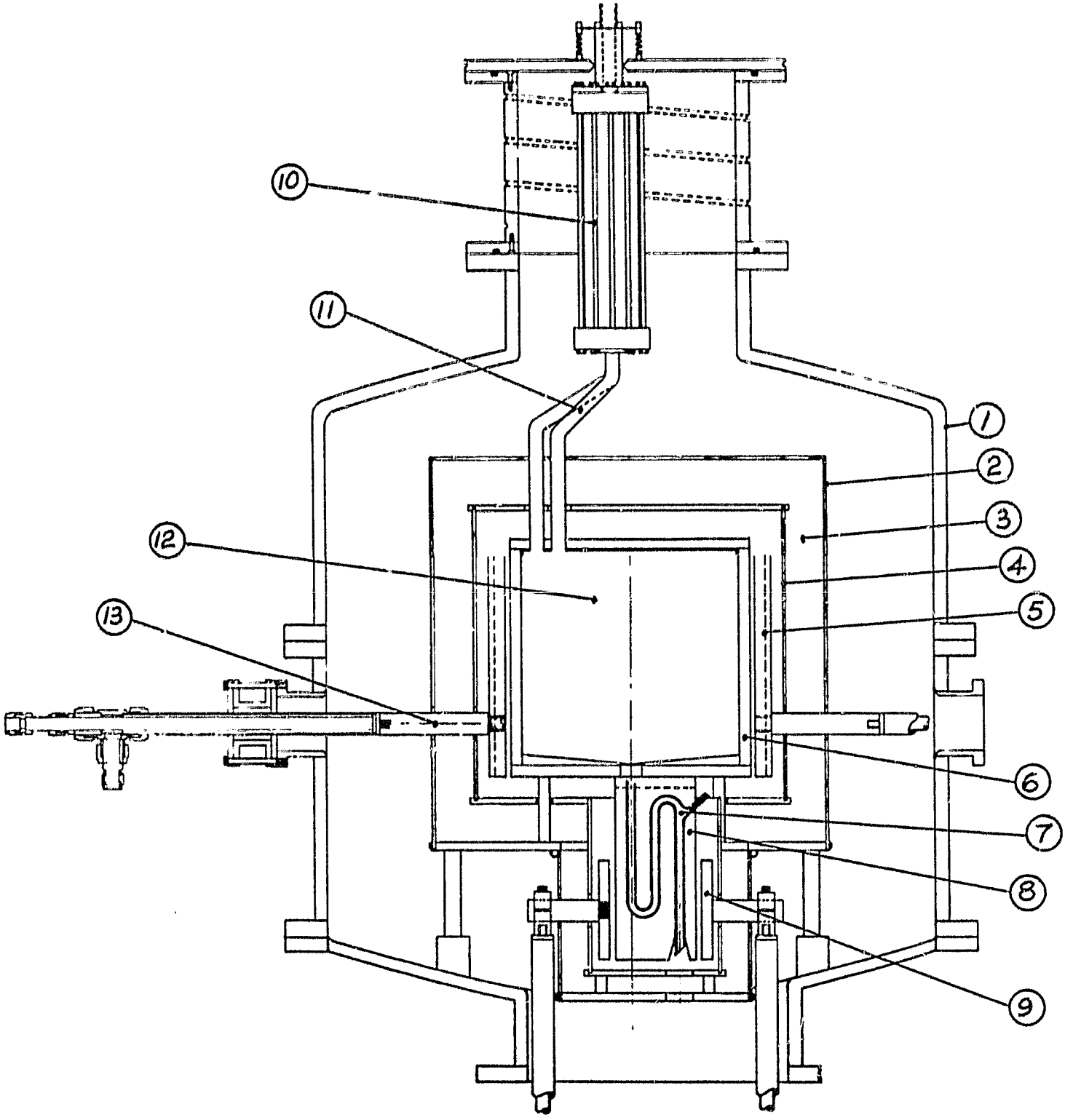

Scale: 1"≈½'

Figure 1b. Cross-sectional view of furnace chamber showing heaters, insulation and support arrangements. See next page for key to drawing.

Key to Figure 1b.

1. Furnace Chamber
2. Stainless Steel
3. Graphite Felt Insulation
4. Graphite Heat Shield
5. Grafoil[R] Heating Element & Clamping Bar
6. Reactor Vessel Support Box - Graphite
7. U-Tube Trap/Seal
8. U-Tube Support Block
9. U-Tube Heater Electrode/Clamp
10. Primary Heat Exchanger
11. Reactor Vessel Inlet/Outlet Tubes
12. Reactor Vessel-Internal Baffles Not Shown
13. Main Heater Electrode

returned to the deposition stage. The reaction chamber and the crystal growth system are separated by a heated delivery tube. The "U-tube" acts as a valve, when the temperature is adjusted above or below the melting point of silicon. A more detailed description of the planned process cycle is given below:

1) The reactor is brought up to temperature under inert gas flow.

2) A small amount of silicon is melted in the "U-tube" to form a positive gas seal. The "U-tube" temperature is dropped to about 1200^{0}C.

3) At the selected reaction temperature $SiHCl_3$ and H_2 are introduced into the chamber and their flow rates set to maximize the deposition of silicon.

4) The reaction is allowed to run for several hours until the desired amount of silicon has been deposited. This is determined by the desired cycle time and the reactor vessel size.

5) At this point the reactant flow is stopped and the gases are flushed out of the reactor with argon.

6) Keeping the "U-tube" at 1200°C, the reactor is raised to about 1450°C to melt down the silicon produced.

7) The gas pressure between the reactor and the delivery tube is equilibrated.

8) The "U-tube" and delivery tubes are raised to about 1415°C. When the silicon is melted in the "U-tube", the reactor will empty by gravity, causing liquid silicon to flow out through the delivery tube to either the Czochralski crucible or an intermediate replenishment crucible. Due to the equilibrated pressures and a vent to prevent siphoning, the "U-tube" will remain full after the reactor has been emptied.

9) The reactor is returned to reaction temperature and the "U-tube" and delivery tubes are returned to 1200°C.

10) The reactant gas flow is then re-admitted to the chamber to start the cycle again.

3.1.3 Specific Vessel Designs

Originally Planned Unit

A square quartz reaction vessel, designed and built, is a 10 inch square box of 0.135" thick quartz plates. The bottom is sloped five degrees toward the centered silicon drain tube.

The internal walls are 0.135" thick vertical plates. There are fourteen internal walls, each 10" high. Some of the internal walls have notches at the bottom for silicon drainage to the bottom center tube. The total internal surface area is 15.28 ft.^{2}; 3.6 ft.^{2} comprise heat exchange surface between the incoming

gas and the outgoing gas. The four central walls that comprise most of the heat exchange surface are shown in Figures 2a and 2b.

The silicon drainage tube ("U-tube") is made of quartz and has 10mm I.D. A 6mm I.D. "anti-siphon" vent tube is located at the top of the spill-over side of the "U-tube".

Innovative design features of this reaction chamber are large surface area per volume of reactor (26.4 ft.^{2} surface area per cubic foot) and internal heat exchange capabilities. The typical Siemens reactor has an estimated 1/2 ft.^{2} of deposition surface per cubic foot of reactor space. The drain tube allows batch production without shutting down the reactor.

Less Expensive Unit

The internal path of the square vessel is a long or "serpentine" path. A short path with parallel walls and an impaction oriented path were also considered. Because the first serpentine vessel made was expensive, an alternative six-inch cylindrical tube, 10 inches long with a single baffle down the center was made at considerably lower cost. This is representative of the

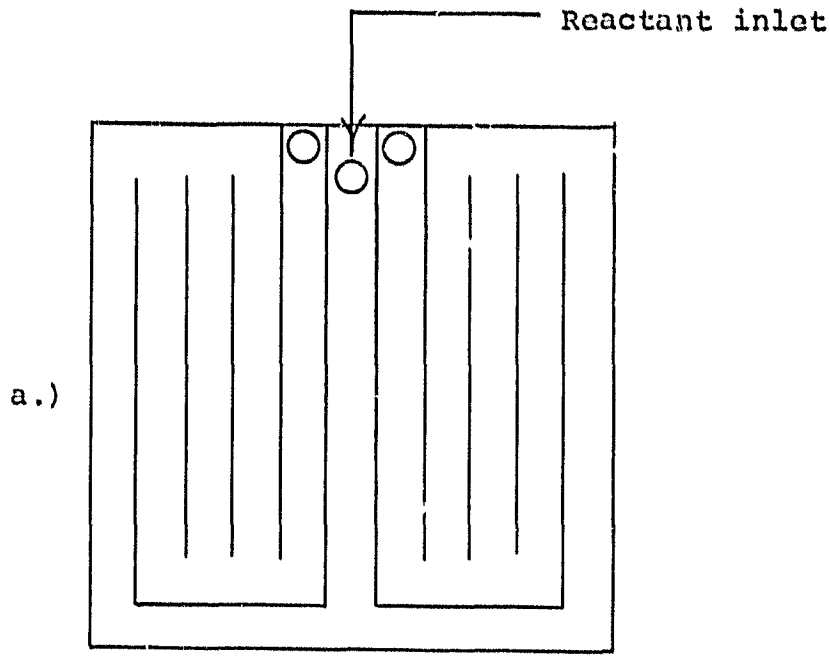

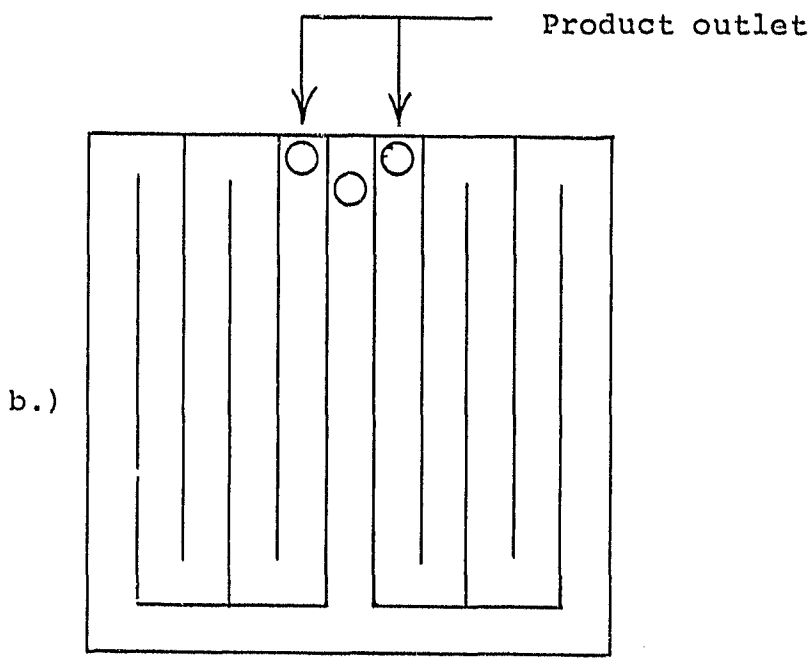

FIGURE 2 Sectional Plan View (Schematic) of Initial Reactor Geometries. a) Parallel Plate, Low Velocity, $N_{RE} \approx 200$. b) Series Plate, High Velocity, $N_{RE} \approx 700$.

parallel flow scheme. Problems occurred while securing the center baffle and therefore a similar 6" diameter tube was used with baffles perpendicular to the tube axis. These were simple to make and represent the serpentine or long flow path in addition to showing areas of impaction.

3.1.4 Heater Design

The resistance heater for the main hot zone is two 0.015 inch thick Grafoil® sheets located on opposite sides of the graphite support box which houses the quartz reaction vessel. The elements are ten inches high and twelve inches long. Design calculations are shown in Appendix section 9.2 for initial sizing of the elements. Each sheet is connected with graphite clamping bars to the opposite vertical side of the two graphite electrode plates which screw onto the main heater electrodes. See Figure 1b parts 5 and 13. The main elements produce a maximum of 19KVA from the 24KVA transformer. We estimated 13KVA would be required during deposition. See Appendix section 9.1.2.

The resistance heater for the U-tube hot zone is similarly designed and constructed for 5KVA from a 6KVA

transformer. This heater maintains the U-tube at temperatures from 1100°C to 1475° depending on the production cycle operation.

3.2 Support System Designs

Five support systems are necessary: 1) the materials handling system, 2) the vessel pressure equalization system, 3) the vessel support system, 4) the material sampling and the waste treatment systems, and 5) the power control box and miscellaneous systems.

3.2.1 Materials Handling System

The materials handling system has many functions: 1) Supplying a known pressure and volume of trichlorosilane and hydrogen to the reactor vessel, 2) heating the inlet gases by heat transfer from the hot outlet gases, 3) removing particles from the cooling the by-product gases, 4) condensing the chlorosilane by-products from the gas stream and pumping them to storage, 5) removing by-product HCl from the hydrogen gas by means of activated charcoal absorption and 6) recycling the "clean" hydrogen back to the reactor as a reactant.

A hydrogen pressure regulator, metering valve and flowmeter are used to adjust and maintain a) pressures of 1-5psig and b) flow rates from 0 - 800 SCFH hydrogen.

Small amounts of make-up hydrogen are added to replace vented hydrogen.

Liquid trichlorosilane is pumped through a metering valve and a calibrated glass tube. The valve adjusts the flow rate. The calibrated glass tube and a stop-watch are used to determine the volumetric flow rate.

We estimated that 40% of the power required to maintain the reactor temperature and heat the reactants could be recovered by exchange from the product gas mixture to the reactant gas mixture. Thus a heat exchanger for the reactor process streams was designed. See Appendix section 9.3.

The exchanger is made of graphite. The hot outlet gases are split to flow in two streams on either side of the inlet gas. The gas streams are separated by finned transfer plates. Fins 0.1 inch thick, 0.1 inch apart, and 0.45 inches high are machined into either side of the transfer plates. The exterior surfaces are plain graphite plates. The exchanger is approximately 6" x 3" x 20" overall. It is designed to raise the inlet stream temperature from 60°C to 700°C, while the outlet stream dropped from 1100°C to 350°C. The heat transfer surface

area was approximately 3 sq. ft., and the theoretical overall transfer coefficient varied with mass flow rate from approximately 3 to 7 BTU/hr. - sq. ft. - ^{o}F.

After the product gas mixture passes through the heat exchanger, it is cooled through a water jacketed tube. Then it passes through a high temperature filter, before going into chlorosilane condensers. The removable cartridge-type filter will show evidence, if any, of entrained silicon powder generated by gas phase reaction away from the walls of the reactor. The filter is a Balston Model 20/35A, Type DH, inorganic bonded glass filter 9 inches long with a 2 inch diameter.

Four shell and tube condensers with a total of 44 sq. ft. of condensing surface are cooled with methancl which is recirculated through a dry ice bath. The product gas mixture passes through the tubes where much of of chlorosilanes condense; they then drain to a tank and are pumped to a storage tank. The remaining HCl and small amounts of chlorosilanes in the product gas mixture pass through three water cooled thirty gallon tanks filled with activated charcoal. The hydrogen with dilute HCl is recycled to the hydrogen flow meter by a compressor

(Model 490, Corken Pump Co., 5:1 compression ratio, 13-36 CFM displacement) which was specifically chosen to provide oil-free, dry pumping of corrosive gases.

3.2.2 Pressure Equalization System

The pressure equalization system continually adjusts the pressure outside of the quartz reaction vessel ie. the chamber pressure, to about 2" H_2O less than the pressure inside the vessel, thus preventing the vessel from sagging or collapsing.

The pressure equalization system consists of a series of solenoid valves and regulating valves which respond to pressure sensitive switches connected to the inlet vessel line and the inlet chamber line. The pressure differential is maintained at 2" $H_2O \pm 1$" with occasional higher variations when process flow rates are adjusted. The actual pressure in the vessel varies from 1-5 psig.

3.2.3 Vessel Support System

The physical support of the vessel consists of an outer double walled, water cooled steel chamber. Inside the chamber, a stainless box is mounted (see Figures 1a and 1b). Inside of the stainless box, 2 inches of

grafelt insulation is held in place with a graphite liner box. Electrodes protrude through holes in the stainless box, insulation, and liner box. The electrodes screw into two graphite plates to which the grafoil elements are clamped. The quartz reactor is placed inside a graphite support box which is then lowered into position between the heating elements. Two graphite support blocks also surround the U-tube and are held together and to the support box with graphite nuts and threaded rod. The U-tube zone is constructed similarly to the large main zone described above and is attached below the main stainless box.

3.2.4 Material Sampling and Waste Treatment Systems

Analysis of the gas mixture streams is needed to provide deposition rate and efficiency information. A Varian Model 920 gas chromatograph is connected to gas lines at various locations to provide on-line analysis.

The waste treatment is accomplished by a liquid scrubber, ie. gas-liquid absorption of any vented chlorosilanes or hydrochloric acid gases into a 10% sodium-hydroxide solution.

The major source of HCl comes from the activated char-

coal adsorption tanks when they are desorbed. The purge gas from the chlorosilane storage drum is the major source of chlorosilanes.

3.2.5 Power Control Box and Miscellaneous Systems

The power control box houses a 24 KVA and a 6 KVA transformer which are connected to the main and U-tube electrodes by water cooled copper cables. The box also houses two power controllers and a rotary switch connected to a digital thermocouple readout display. The two SCR controllers respond to thermocouple feedback from the heating elements in the two hot zones. The controllers accordingly increase or decrease the transformer power output.

An overall view of the system is shown in Figure 3. Several other parts of the system housed in a metal shed immediately outside the main building, are not shown. These included the recycle compressor and hydrogen storage, activated carbon tanks, liquid gas scrubber, and chlorosilane storage tanks.

The entire gas handling and reactor system is under a vent fan to remove irritating and potentially explosive gases in the event of leaks.

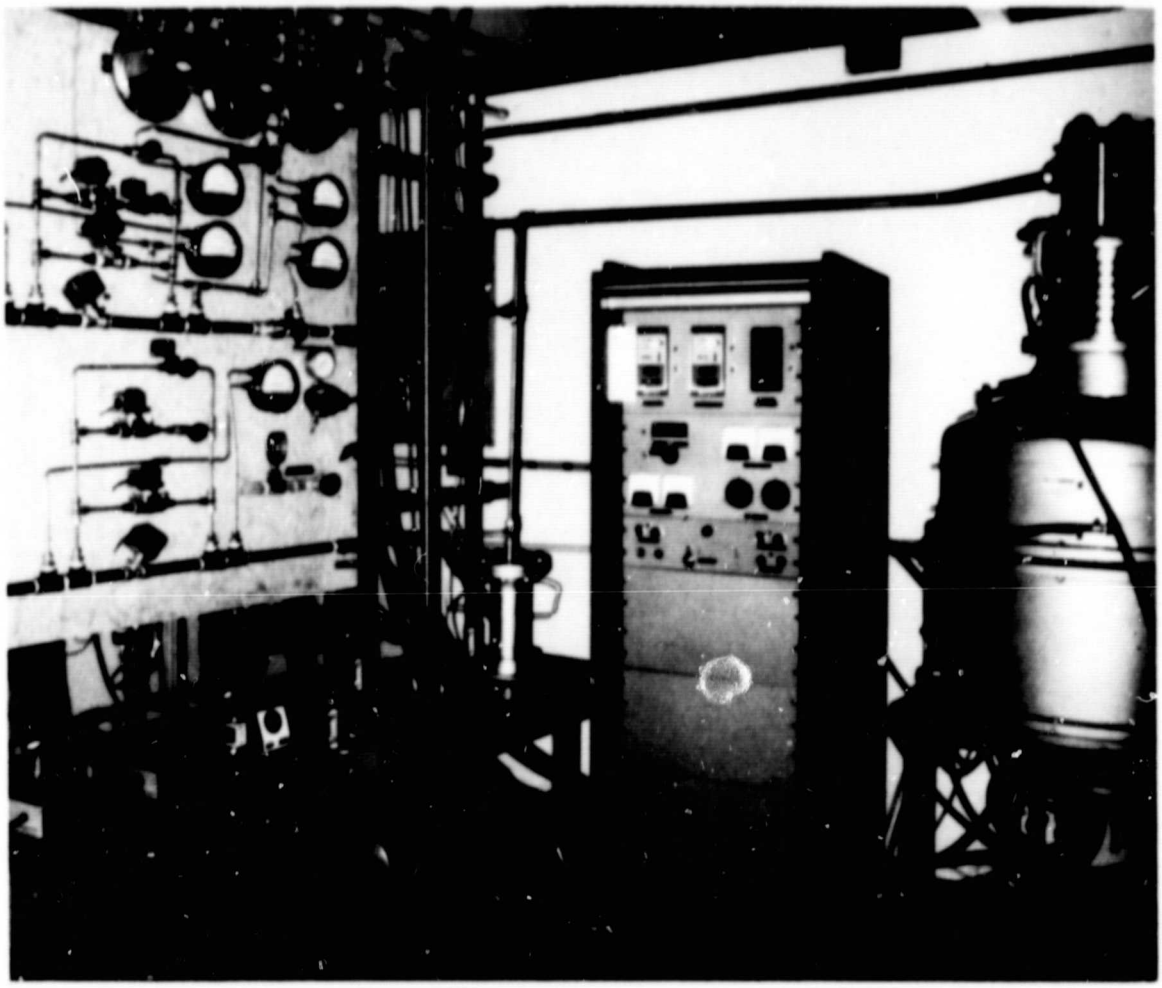

Figure 3. Experimental apparatus; furnace chamber at right, power supply and controls in center. The pressure equalization system at left conceals the chlorosilane condensers which are mounted behind the panel.

ORIGINAL PAGE IS
OF POOR QUALITY

4. TECHNICAL RESULTS

4.1 Run Summary

Eleven test runs were made during the course of this contract. The first four runs yielded no deposition results but allowed operator familiarization and testing of all support systems. When hydrogen leakage from the primary heat exchanger was eliminated, seven runs were made with deposition results.

General run descriptions and run data are given in the following sections.

4.2 General Test Run Descriptions

The first four test runs were intended to give deposition results in cylindrical vessels with a single baffle down the center as shown in Figure 4. As was mentioned earlier, the hydrogen leaks prevented deposition of substantial amounts of silicon. In runs #3 and #4 when less than 20gms of silicon were deposited, it was evident that the outlet tube was collecting a silicon/silicon-oxide material that would reduce deposition time in future reactors. Therefore, two "traps" (enlarged tube sections) were incorporated on the outlet tube of vessel #5. One trap was inside the "hot zone" and the other outside. The main vessel section also contained a new baffle arrangement, shown in Figure 5, for additional surface area

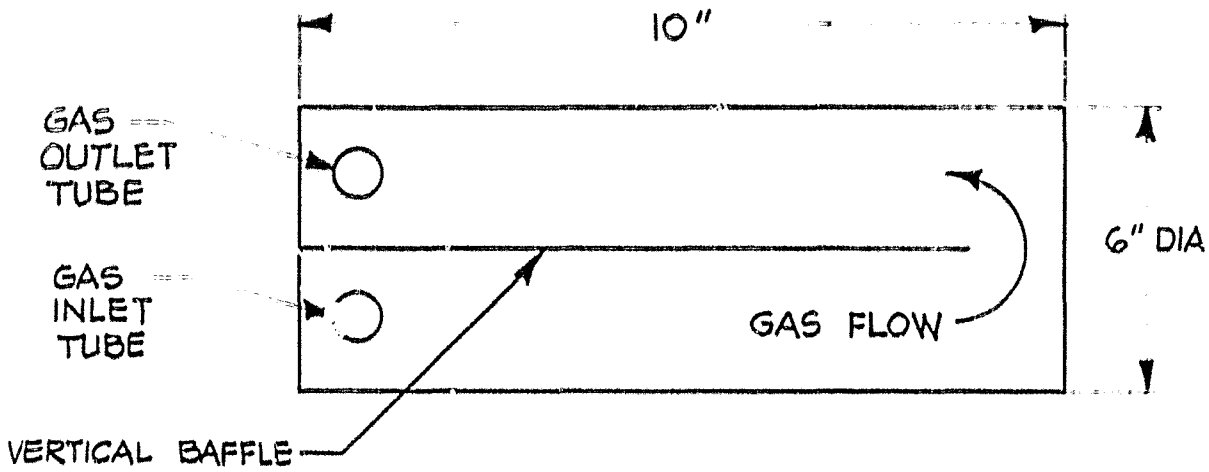

FIG 4
6" DIAMETER REACTION VESSELS 1-4
TOP VIEW SCHEMATIC

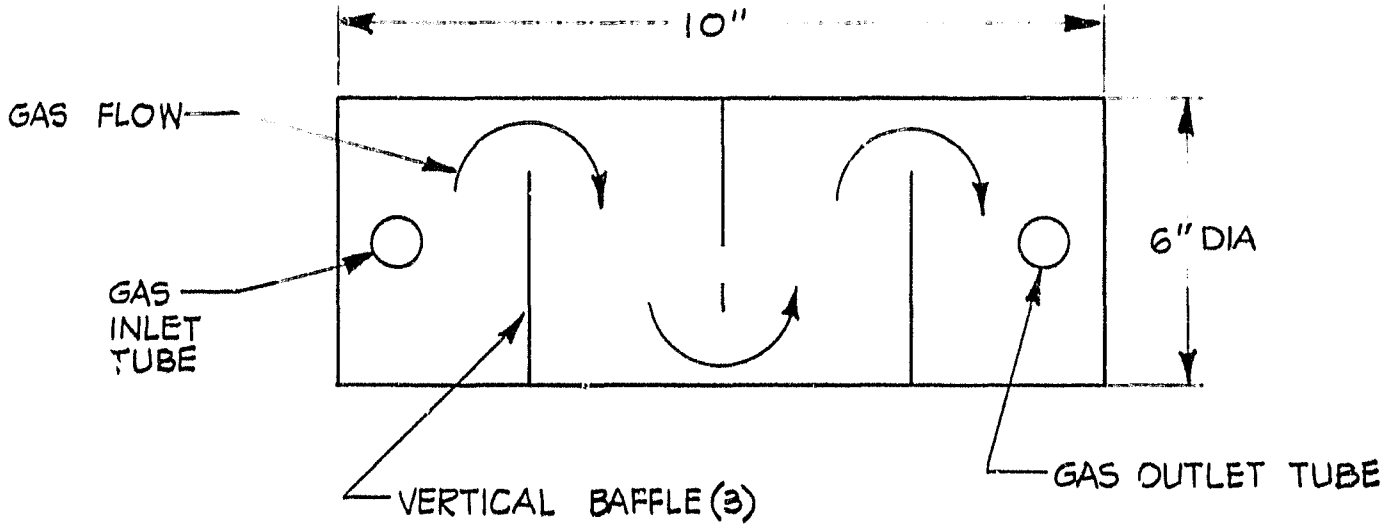

FIG 5
6" DIAMETER REACTION VESSELS 5-7
TOP VIEW SCHEMATIC

and turbulence. The "traps" of #5 showed that the silicon/oxygen material collected between the "hot zone" and the "cold zone". Reactors 6-11 incorporated various trap designs and insulation packages to minimize plugging of the outlet section.

HCl-Quartz etching at temperatures >1250°C reached in these initial runs was responsible for a portion of the materials collected in the traps therefore the wall temperatures for vessels 6-11 were kept below or equal to 1250°C during deposition. By observing the "traps" and the differential pressure it was found that material build-up occurred during the melt down cycle.

Reactor #8 incorporated 5 baffles; reactor #9 and #10 incorporated 7 baffles. The total reactor deposition surface areas are given in the following data tables. Reactor #11 was the square box reactor discussed in the section 3.1.3. During fabrication some main internal walls were inadvertently left out. This led to a reduction in the countercurrent heat exchange and the deposition surface area was reduced 30%.

The first 4 runs were terminated due to H_2 leaks. Runs 5-9 were terminated because of outlet tube plugging. Runs 10 and 11 were terminated because of drain tube freeze-up and a suspected drain tube break, respectively.

4.3 Data

Specific data for runs 5-11 is shown in the following Tables, Ia, Ib, IIa and IIb.

4.4 Discussion of Results

During the course of this contract several reactor configurations, temperatures, and chemical compositions were examined for their effect on silicon deposition from trichlorosilane. Simultaneously, the reactors were developed for batch production capabilities.

The reactor was designed to yield ½kg/hr. silicon at 18% conversion. The following factors are thought to influence the volume and surface area needed to achieve the target production rate and conversion efficiency.

1. Gas temperature
2. Wall temperature
3. Reactor geometry
4. Reaction kinetics
5. Gas phase neucleation
6. Diffusion of by-products from boundary layers
7. Rate of chemical vapor deposition
8. Concentration of reactants
9. Gas flow regime Laminar/Turbulent
10. Particle size
11. Reaction initiation
12. Reaction termination
13. Residence time

Table Ia

Reactor Test Data

Run No.	Grams Silicon Produced	Hours of Deposition	Total Gas Flow (SCFH)	Mole. % TCS	Actual Cl/H Ratio
1-4	-	-	-	-	-
5	150	5	225	1.5	
6	293	8.75	170	5.0	
7	467	8.5	255	6.25	0.11
8	1050	4.49	170, 216 270	17.5	0.303
9	1030	8.1	125, 115	19.8, 25	0.418 0.527
10	1100	9.5	100	25	0.438
11	1100	3.5	500	10	0.176

Table Ib

Run No.	Total Surface Area (in.^{2})	Deposition Surface Area (in.^{2})	Total Volume (in.^{3})	Deposition Volume* (in.^{3})	% of Surface Area Used
1-4	355	-	280	-	-
5	355	177	280	92	33
6	355	220	280	175	62
7	355	341	280	269	96
8	428	428	280	280	100
9	500	400	280	168	80
10	500	346	280	177	69
11	1560	1560	1000	1000	100

*The deposition volume is the portion of the whole reactor volume which has deposition on its wall surfaces.

Table IIa

Derived Statistics from Reactor Test Data

(See Next Page for Description of Captions)

Run No.	1 Average Production Rate (gm/hr)	2 Deposition Rate (μ/hr)	3 Average Conversion %	4 Energy Consumption kw-hr./kg
1-4	-	-	-	-
5	24	113	20	477
6	27	101	13	412
7	68	107	18	169
8	187	364	20	64, 54, 44
9	90	212	11	137, 130
10	93	223	15.3	115
11	250	134	17	49

Table IIb

Run No.	5 Total Residence Time (sec)	6 Deposition Residence Time (sec)	7 Effective Temperature (°k)	8 Intended Cl/H Atomic Ratio
1-4	-	-	-	-
5	0.56	0.19	1100	0.02
6	1.04	0.63	900	0.08
7	0.64	0.61	975	0.10
8	0.88 0.69, 0.55	0.88 0.69, 0.55	1073	0.29
9	1.27, 1.38	0.76, 0.83	1000	0.37, 0.50
10	1.52	0.95	1050	0.40
11	0.95	0.95	1200	0.157

Description of Captions Shown

in Tables IIa & IIb

1. The average production rate is the total silicon produced divided by the hours of a deposition - meltdown cycle.

2. The deposition rate is the volume of silicon deposited divided by the hours of deposition and the deposition surface area.

3. The average % conversion is the total silicon produced divided by the silicon in TCS feed to the reactor.

4. The power consumption is the total power consumed per deposition - meltdown cycle divided by the total kg produced per cycle. One cycle consists of 1 hr. meltdown at 8kw and 4 hours deposition at the average power consumption during deposition.

   Sample calculation for Run No. 5:

   $$\text{Total power/cycle} = (8\text{sw} \times 1\text{ hr.}) + (12.3\text{kw} \times 4\text{ hr.}) = \frac{57.2\text{kw hr.}}{\text{cycle}}$$

   $$\text{Total kg produced/cycle} = \frac{0.150\text{kg produced}}{5\text{ hrs. deposition}} \times \frac{4\text{ hrs. deposition}}{\text{cycle}}$$

   $$= 0.12\text{ kg/cycle}$$

   $$\text{Power consumption/kg} = \frac{57.2\text{kw hr.}}{.12\text{ kg}} = \frac{477\text{kw hr.}}{\text{kg}}$$

5. The total residence time is the total reactor volume divided by the total gas flow rate.

6. The deposition residence time is the deposition volume divided by the total gas flow rate.

7. The effective temperature is an estimate obtained by subtracting 200°K from the highest temperature measured in the reaction vessel.*

8. The intended Cl/H ratio is based on the mole % trichlorosilane in a pure recycled hydrogen stream.

*The estimate is based on comparison of actual conversion to theoretical conversion at the highest temperature recorded, and it is based on the article entitled "Gas Temperature Measurement" by Robert Moffat which indicates that temperatures for our particular case could vary several hundred degrees due to velocity, conduction and radiation errors.

Ref. Temperature, Its Measurement and Control in Science and Industry, Volume 3, Part 2: Applied Methods and Instruments. A. I. Dahl [C. H. Herzfeld, Editor-In-Chief, Reinhold]

Some of these influencing factors were known by previous experiences. Others could not be investigated without extensive research.

The effect of variation in reactant concentrations, reactor geometry, surface area, volume, and length of flow path were investigated as a part of the experimental study.

The etching of quartz by HCl at temperatures above 1250°C is well documented. Experiments 3 and 4 were run at wall temperatures approaching 1350°C and quartz etching was observed. Therefore, the reactor wall temperature was limited to 1200°C for later runs. Using data by Hunt, Sirtl and Sawyer, one can predict that at 1200°C and a Cl/H ratio of 0.03 (a large excess of hydrogen) 72% of trichlorosilane could be converted to silicon if equilibrium is reached. For this set of conditions preheating a large volume of hydrogen to 1200°C becomes a limiting principle for design as well as operation. For this, the very short residence times associated with very large flow rate could cause particles that are formed to be blown out of the reactor. At high Cl/H ratios, such as 1.0, the maximum predicted conversion efficiency of 24% could possibly be reached. The experimental runs were taken at different Cl/H ratios to test these predictions.

The experimental data generated using the small 6 in. diameter vessel can be used to predict the production rate of the larger 10" cubical reactor. Accordingly, it is reasonable to expect that a 10" cubic reactor with internal walls could easily produce 500gm/hr. at greater than 18% conversion. In fact, projecting from the results of run no. 8, even at non optimum conditions a 10" cubic reactor with 1500 in.^{2} of deposition area could produce 820gms per hour.

$$364 \frac{\mu}{hr.} \times 1500 in.^2 \times \left(\frac{2.54cm}{in.}\right)^2 \times \frac{m}{10^6 \mu} \times \frac{100cm}{m} \frac{352cc}{hr.} \times \frac{2.329gm}{cc} = 820gms/hr.$$

Unfortunately, this could not be tested within the contract period.

With further reactor development, a 10" cubic reactor could be optimized to produce 1025gm/hr. If 500gm/hr. is a desirable rate the reactor could be scaled down accordingly.

Various problems occurred, as expected, during the reactor tests. All of these problems seem solvable with additional developmental effort. The two main problems were: 1) reaching optimum reaction conditions, specifically, reaching high gas temperatures; and 2) outlet tube plugging.

Optimum conditions ie. high gas temperatures (1100°C -

1200°C) in the reactor zone, can be accomplished by using dual material feed lines into the reactor. One line being hot H_2 (1100-1200°C), the other carrying cooler (500°-700°C) TCS with a small hydrogen carrier concentration. The counter current heat exchange design inside the reaction vessel will give additional reaction energy to the initial deposition sections. These changes can increase the reaction temperature by 30-50% (to 1100°C) resulting in a corresponding increase in conversion of TCS.

Outlet tube plugging can be alleviated by switchable mechanical design for periodic removal and replacement of the traps without furnace shut down.

5. ECONOMIC ANALYSIS OF GMR REACTOR USING IPEG

5.1 Input Valve

5.1.1 QUAN

The experimental data generated using the small 6 inch diameter vessel can be used to predict the production rate of the larger 10" cubical reactor. Accordingly, it is reasonable to expect that a 10" cubic reactor with internal walls could easily produce 500gm/hr. at greater than 18% conversion. In fact, projecting from the results of run no. 8, even at non optimum conditions a 10" cubic reactor with 1500 in.^{2} of deposition area could produce 820gms per hour.

$$364 \frac{\mu}{hr.} \times 1500 in.^2 \times \left(\frac{254 cm}{in.}\right)^2 \times \frac{m}{10^6 \mu} \times \frac{100 cm}{m} = \frac{352 cc}{hr.} \times \frac{2.329 gm}{cc} = 820 gms/hr.$$

With further reactor development, a 10" cubic reactor could easily be optimized to produce 1000gm/hr.

For analysis purposes we will use QUAN = $\frac{1 \text{ kg.}}{\text{hr.}}$ x 48 wks/yr. x 125 hrs/wk = 6000 $\frac{\text{kg}}{\text{yr.}}$

[(7 days/wk x 24 hrs/day) - 12 hrs. vessel change] (4 hrs. production/5 hrs.) = 125 hrs/wk.

5.1.2 EQUIP

The reactor chamber and internal parts are valued at $15,000.

EQUIP = $15,000 (reactor) + $36,000 (material handling) = $51,000.

5.1.3 SQ. FT.

The floor space for one reactor and operator is 200 sq. ft.

5.1.4 DLAB

Direct labor includes:

1. An operator who can run 4 reactors - $7/hr./4 reactors x 48 wks/yr. (7 days/week x 24 hrs/day - 12 hrs. reactor turnaround) = $13,100/yr.

2. An assembler - 48 wks/yr. x 12 hrs/wk x $7/hr. = $4,000/yr.

3. Chemical operator II - $8/hr. 2 hr./day x 7 days/wk. x 48 wks. = $5,400.

DLAB = $13,100 + $4,000 + $5,400 = $22,500/yr.

NOTE: Fringe benefits are not included in these rates but are accounted for in IPEG coefficient C_3.

5.1.5 MATS

Assuming 30% conversion of TCS to silicon and sales of by-product HCl, TCS, and STC, the material costs are: 1kg/hr @ 6000 deposition hrs/yr.

Reactant costs: 1) TCS 6000kg Si x $\frac{1}{.3}$ x $\frac{135}{28}$ $\frac{\text{TCS}}{\text{Si}}$ x

$\frac{Lb}{.454kg} \times \frac{\$0.6}{Lb} = \$127,400.$

2) H_2 5SCFH x \$0.065/1SCFH x 6000hr/yr = \$1,900.

3) Argon 10SCFH x \$0.05/SCFH x 6000hr/yr = \$3,000.

4) Miscellaneous \$2,000

5) Quartz Reactors \$4,800

Total \$182,300

By-Product credits: 1) HCl 50mole/hr x 6000hr/yr x

$\frac{36gm}{mole} \times \frac{Lb}{454gm} \times \frac{\$0.75}{Lb} = (\$17,800)$

2) $SiCl_4$ $56\frac{mole}{hr} \times \frac{170gm}{mole} \times \frac{Lb}{454gm} \times \frac{6000hr}{yr} \times \frac{\$0.6}{Lb} = (\$75,500)$

3) $HSiCl_3$ $26\frac{mole}{hr} \times \frac{6000hr}{yr} \times \frac{135gm}{mole} \times \frac{Lb}{454gm} \times$

$\frac{\$0.6}{Lb} = (\$27,800)$

Total credits (\$121,100)

MATS = \$61,200

5.1.6 UTIL

A 45kw hr/kg integrated average energy consumption requires a cost of 45 x 6000 x \$.038 /kw hr = \$10,300/yr plus cooling water of \$500/yr therefore UTIL = \$10,800/yr.

5.2 Price Per Kilogram Silicon

From the IPEG manual (1980 dollars)

$$\text{Price} = \frac{\text{Annual Manufacturing Cost (AMC)}}{\text{QUAN}}$$

AMC = .55 EQUIP + 114.4 SQFT + 2.14 DLAB + 1.23 MATS + 1.23 UTIL

For our case AMC = 187,640

$$\text{Price} = \frac{187{,}640}{6000} = \$31.00/\text{kg} \quad \text{(1980 dollars)}$$

For comparison of how each input affects the AMC and price, see Table III.

A reactor's "life" is shortened mainly because of the reaction of molten silicon with the quartz. Recent literature cites 0.2 μ/min consumption of a quartz surface under a stirred silicon melt.[8,9] Our reactor will only be in contact with molten silicon for 1/2 hr every 5 hours production cycle. Therefore, the total thickness of quartz lost per week is 150μ. The loss for four weeks is $12\mu/\text{hr} \times \frac{1/2\text{hr}}{5\text{ hrs}} \times 24 \text{ hrs} \times 7 \text{ days} \times 4 \text{ weeks}$ = 800 μ or 0.08cm. With this in mind, a reactor could feasibly be used for 1 month which allows a price of $22.75/kg in 1980 dollars.

5.3 Cost Comparison of CMR Production to the Conventional Siemens Process

The major factor which limits this reactor compared to the Siemens reactor is the reactor lifetime as was discussed above.

Table III

n	$Input_n$	Coefficient c_n	Input $	C_nX $Input_n$ $	% of AMC
1	EQUIP	0.55	51,000	28,050	14.9
2	SQFT	114.4	200	22,880	12.2
3	DLAB	2.14	22,500	48,150	25.7
4	MATS	1.23	61,200	75,276	40.1
5	UTIL	1.23	10,800	13,284	7.1

40% of the AMC is material costs times C_4. This is heavily dependent upon the quartz reactor cost. If a $1000 reactor could be used for 1 month the AMC = .55(51,000) + 114.4(200) + 2.14(22,500) + 1.23(25,200) + 1.23(10,800) = $143,360/yr.

Price = ($143,360)/(6,300kg/yr) = $22.75/kg (1980 dollars)

The major improvement is the energy consumption of the GMR reactor. The Siemens process is estimated to use $\frac{400\text{kw hr}}{\text{kg}}$ or 400 x \$.037/kwh = \$14.8/kg produced. The GMR has shown $\frac{45\text{kw hr}}{\text{kg}}$ consumption in the prototype system which is a reduction of \$13.30/kg produced.

6. CONCLUSIONS AND RECOMMENDATIONS

Analysis of the eleven test reactor runs shows that an efficient, semi-continuous, internal chemical vapor deposition reactor can be a viable alternative to current methods of silicon production.

An adequate materials handling system coupled with an optimized version of this reactor can produce a lower cost solar grade silicon from various chlorosilane feed sources.

It is recommended that the reactor be developed further using an independent pilot facility or near an actual chlorosilane production facility, the latter providing advantages of cost effective development, safety, and material handling convenience. Since the quartz reactor vessel turned out to be a major cost device in this system, it is important to consider cost reduction through increased production scales and to test the actual production life of a quartz reactor.

7. SUPPLEMENT

The silicon production reactor tested under this contract produces silicon that is drained from the bottom of the reactor. Two methods of handling the molten silicon were considered to be more desirable than current casting or powder producing processes. The first method involves delivery of liquid silicon as described in section 7.1. The second method produces silicon shots as described in section 7.2. Both methods were tested under this contract.

7.1 Silicon Transfer Tube

7.1.1 Introduction

This apparatus allows molten silicon transport to and/or from high temperature furnaces through a slanted, heated quartz tube. The tube is surrounded by a heating element and a water cooled insulation package for dependable even tube temperatures and energy conservation. Strategically placed thermocouples assist in precise temperature control.

7.1.2 Detailed Descriptions and Drawings

The quartz silicon transfer tube shown in Figure 6 is resistively heated by a graphite rod below the tube. A graphite casing serves as a tube support and completes the heating element circuit. The graphite rod, quartz tube, and graphite tube support are wrapped in quartz tape for isolation from the

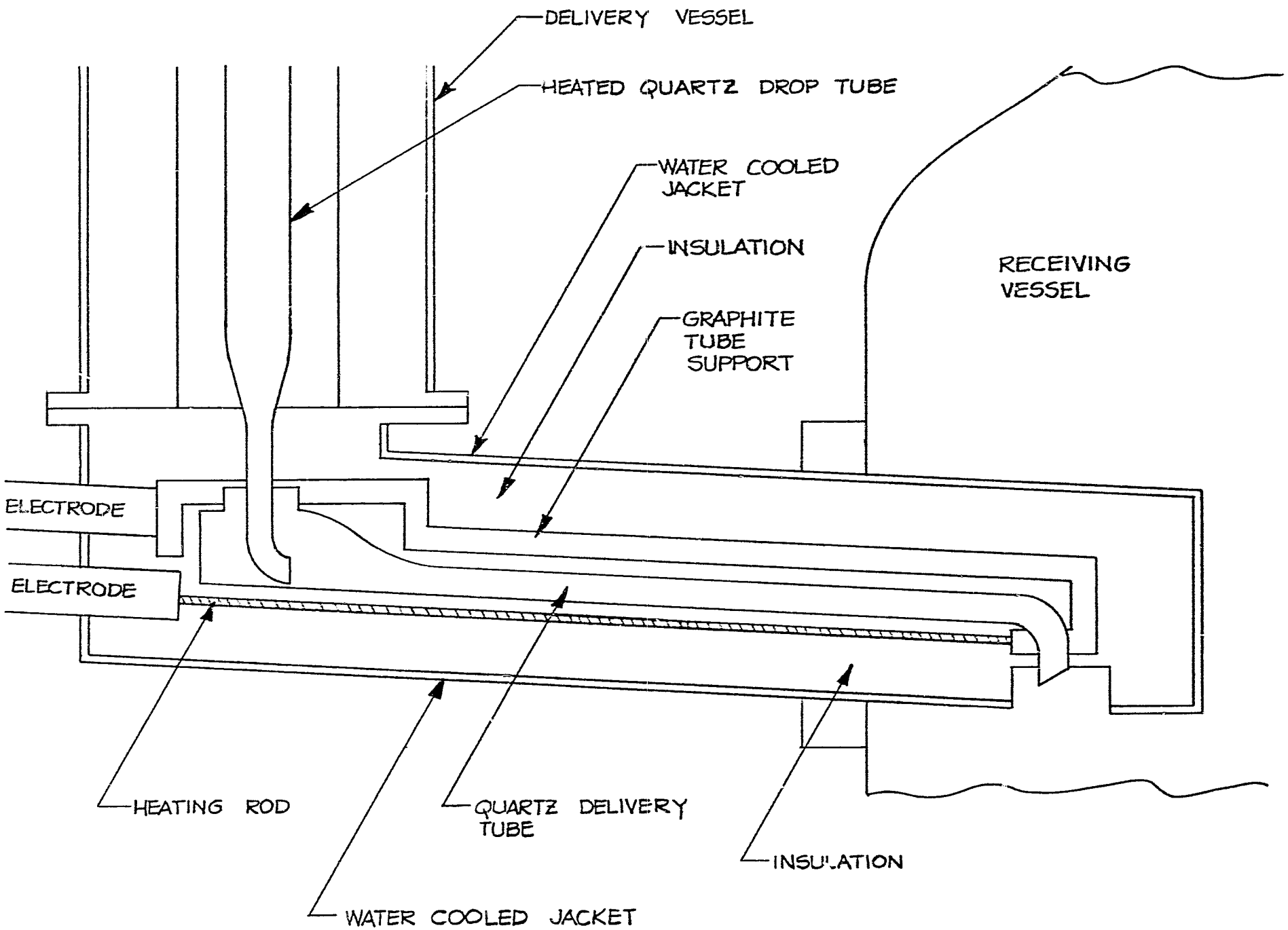

Figure 6

Silicon Transfer Tube

grafelt insulation surrrounding them. The insulation is then encased by an argon-purged, water-cooled steel jacket. The tube assembly is flanged and gasketed to the bottom of the delivery vessel and into the receiving vessel.

7.1.3 Experimental Tests

The Transfer Tube as described above was connected to the delivery vessel and receiving vessel and set up for a dry run to check power supply and control circuits. All units were operated at a low temperature (500°C).

All power supplies, control units and heating elements appeared to operate normally and the system was shut down and readied for transfer run.

The first transfer tube run was not successful due to uneven expansion between the graphite tube support and the heating element and resultant electrical shorting of the heating element. To correct this design deficiency, a flexible connection to Grafoil® was made between the main heating element and the graphite tube support, which also serves as the return current path for the heater. After the modification, the Transfer Tube was reassembled, connected to the delivery and receiving vessels and another run started.

Up to two hours the run had been normal and all

temperatures were at 1200°C. At this point the thermocouple connected to the delivery vessel stopped registering.

The system was again shut down and dismantled for examination. It was found that the thermocouple junction in the main delivery vessel had fractured and could not register output.

The Transfer Tube was then completely disassembled and examined. This unit showed no evidence of failure in any area. The modified flexible connection had served its purpose and was in good condition. The quartz isolation tape had sintered and the fibers fused to form a rigid wrapping. No evidence of the "snapping" sound was observed in any of the components of the Transfer Tube assembly. The "snapping" sound was apparently normal expansion noises in the metal components of the Transfer Tube and modified metal components in the receiving vessel.

7.1.4 Conclusions

Notwithstanding the failure of the delivery vessel thermocouple, the system worked very well and temperatures indicated that the Transfer Tube would have successfully delivered molten silicon from one point to the other. As evidenced by the sintering and fusing of the quartz tape, heating along the Transfer

Tube was uniform. While bringing the unit up to temperature a difference between the entrance end and exit end temperature was normal because of a larger graphite mass at the entrance or receiving end of the tube. Because of the cost and fragility of the graphite parts and size requirements, R.F. heating of the Transfer Tube assembly might be a worthwhile consideration. For ease of assembly and a more positive guarantee against shorting to the thermal insulation, a quartz envelope may be more desirable than quartz tape. Although the tape worked satisfactorily, its assembly is time consuming and the tape may not stand up over long periods as evidenced by the sintering and fusing.

7.2 Shotting Tower

7.2.1 Introduction

This apparatus minimizes the length of gravitational drop necessary to produce silicon (or other material in small "shot" form). Silicon shot is easily handled and are compatible with most furnaces that use silicon.

To produce shots, a long drop distance is necessary by traditional methods which employ inert gas for cooling. The limiting factor which demands a long drop distance is the rate of heat removal. This rate

is dependent upon two factors: 1) overall heat transfer coefficient for the drop-coolant interface and 2) the driving "force", i.e. temperature difference between the hot drop and cold fluid.

This apparatus increases the overall heat transfer coefficient by dropping the hot material into a cold recirculating liquid. Also the driving force, ΔT, is very high in this unit. Therefore, the heat transfer is quicker and a shorter drop distance is sufficient.

7.2.2 Detailed Descriptions and Drawings

The silicon shot drops from the shotting nozzle through a silicon/argon drop zone into cold liquid methanol is shown in Figure 7. This gas space is necessary to prevent liquid or gaseous methanol from entering the hot silicon nozzle and the upper furnace chamber. If methanol vapors are formed and if they rise above the methanol liquid level before being condensed by the cold liquid methanol, the argon flow will carry the vapor from the silicon/argon zone through the argon vent pipe. The methanol vapor can be condensed and recycled.

After the silicon shot drops through the argon/silicon zone, it will fall through the methanol/silicon

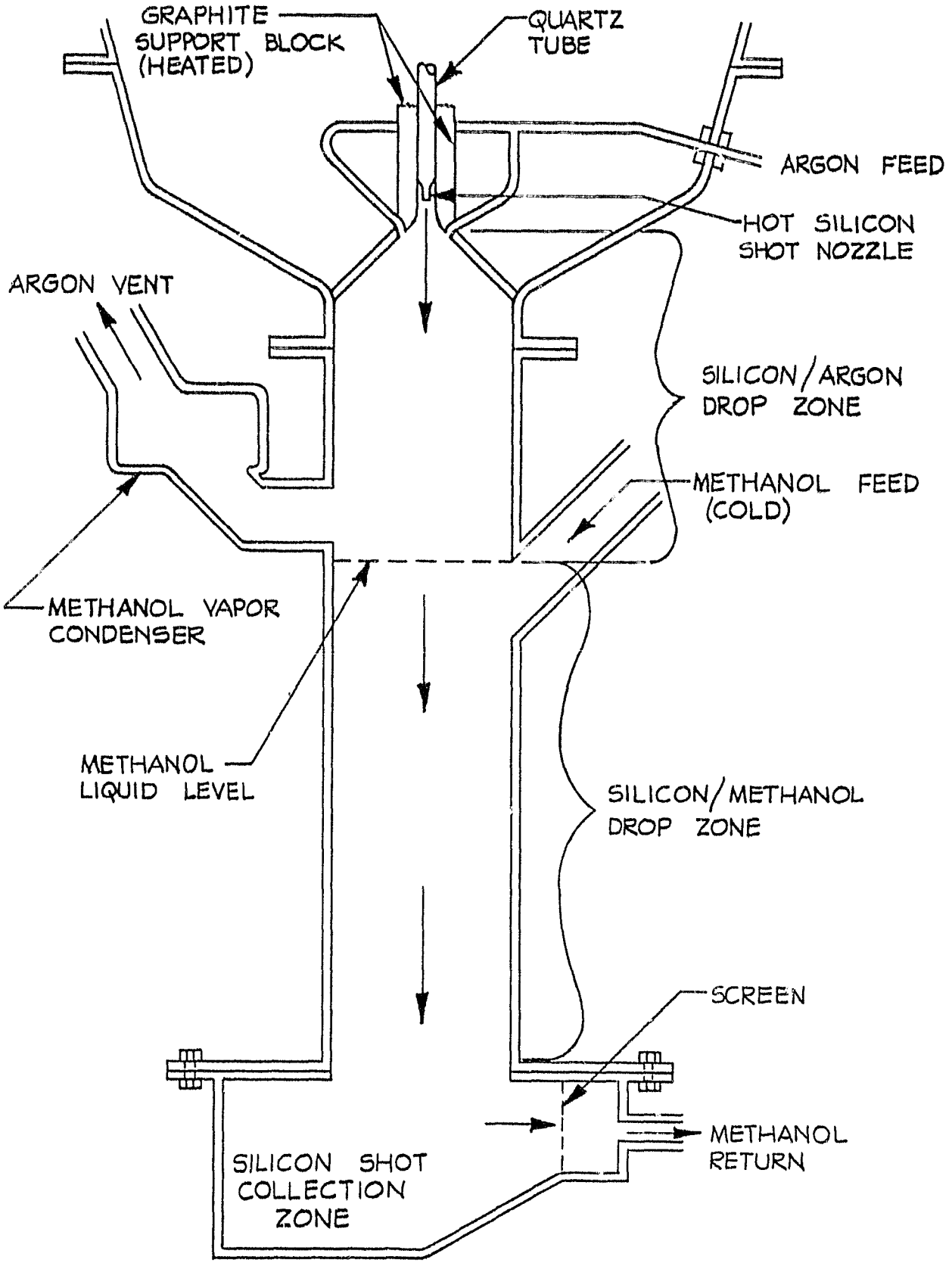

SCHEMATIC OF MODIFIED SHOTTING TOWER
FIGURE 7

zone. While dropping through this zone, the silicon shot will solidify and cool. The shots will collect below the drop zones in the collection zone shown in Figure 7. The methanol will be cooled and then recirculated.

7.2.3 Results

The test apparatus produced shots in the second experimental run, after some modification. The shots were about 2-5mm in diameter as shown in Figure 8. It was not possible to closely control the rate of flow of liquid silicon through the nozzle. This resulted in a build up of a mound of solidified Si which had run more or less as a continuous liquid stream through liquid methanol. The experiment showed that liquid cooling was a viable concept. However, methanol as a coolant is unsuitable since methanol pyrolyses on contact with molten silicon leaving carbonaceous deposits on the silicon shot. Liquids belonging to the silane family may prove to be appropriate candidates for silicon drop quenching.

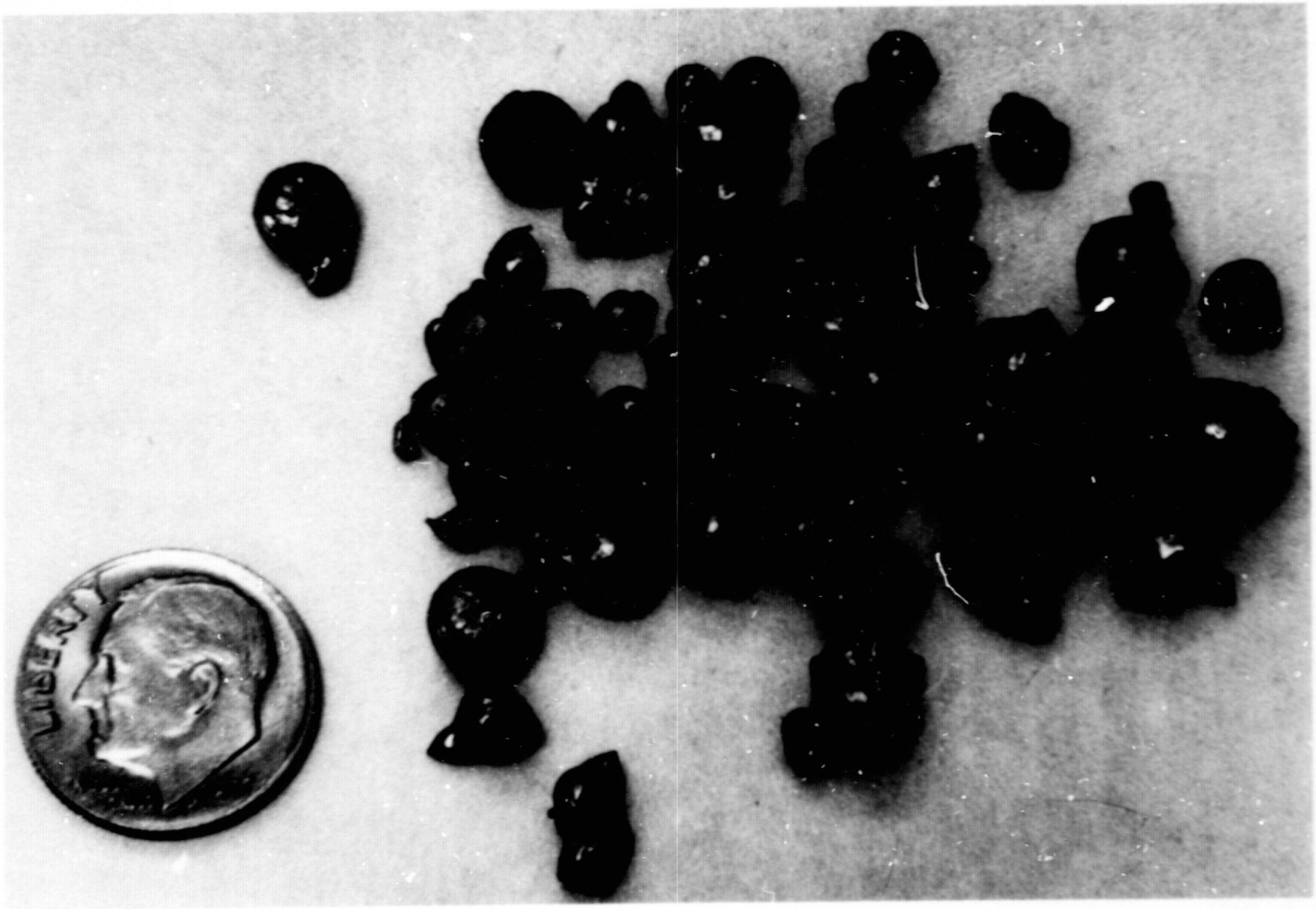

Figure 8

Shot Formed in Cold Methanol Shotting Tower

ORIGINAL PAGE IS
OF POOR QUALITY

8. REFERENCES

1. L. Hunt & E. Sirtl, J. Electrochem. Soc. 119 1741 (1972).

2. E. Sirtl, L. Hunt, and D. Sawyer, ibid 121 919 (1971).

3. G. Pauls, U.S. Patent 2,943,918, 1960.

4. L. Bertrand and C.M. Olson, U.S. Patent 3012862, 1961.

5. C. Yaws, C. Hansen and K. Li, Quarterly Technical Progress Report (XIII), ERDA/JPL-954343-78/13, Dec. 1978.

6. C. Yaws, P. Shah, D. Patel, G. Hsu, R. Lutwack, Solid State Tech. Feb. 1979, pp. 65 - 69.

7. A. Fraas and M. Ozisik, Heat Exchanger Design, Wiley, New York, 1965.

8. R. E. Chaney & C. J. Varker, Journal of Crystal Growth 33, 188 (1976)

9. B. Bathey, H. E. Bates and M. Cretella, J. Electrochem Society, 127 (3) 771 (1980)

9. APPENDICES

9.1 Reactor Design Calculations

The reactor was designed to yield a rate of Si formation of at least 0.5kg/hr., with an assumed conversion efficiency of 30%. This yield we believe to be attainable based on reported efficiencies in an open flow-through tube reactor of 28%[3] and 50% in a fluidized bed system.[4] These assumptions lead to the typical reactant and product quantities listed in Table IV.

Hunt, Sirtl, and Sawyer have provided the basis for our design calculations, recognizing that their data are equilibrium values. Using $SiHCl_3$ as the silicon source, we have plotted the potential conversion of silicon in the gas at various hydrogen dilutions (Cl/H ratio) over a range of temperatures, Figure 9. In Figure 10 we have plotted, based on a silicon formation rate of 0.5kg/hr., from $SiHCl_3$, the volumetric flow rate of reactants as a function of temperature for various Cl/H ratios. This shows the volumetric flow rate at temperatures through the reactor.

9.1.1 Deposition Surface Requirement Estimate

Assuming deposition rates of 10μ/min will be achieved. $1000\text{gm/hr} \times \frac{1}{2.33\text{gm/cc}} \times \frac{\text{hr}}{600\mu} \times \frac{\mu}{10^{-4}\text{cm}} = 7{,}153\text{sq cm}$ of deposition surface is needed.

Table IV

Reactant and Product Quantities: 0.5 Kg/hr. Deposition Rate, 30% Yield

Species	Moles	Weights kg	Volume (STP), ft^3	Volume (1300^0K), ft^3
Reactants:				
$SiHCl_3$	59	7.99	47	222
H_2	395	0.80	312	1489
			Total	1710
Products:				
$SiHCl_3$	13	1.76	10	38
$SiCl_4$	28	4.78	22	83
HCl	25	0.91	20	75
H_2	404	0.81	319	1202
Si (s)	17.8	0.5	-	-
			Total	1400

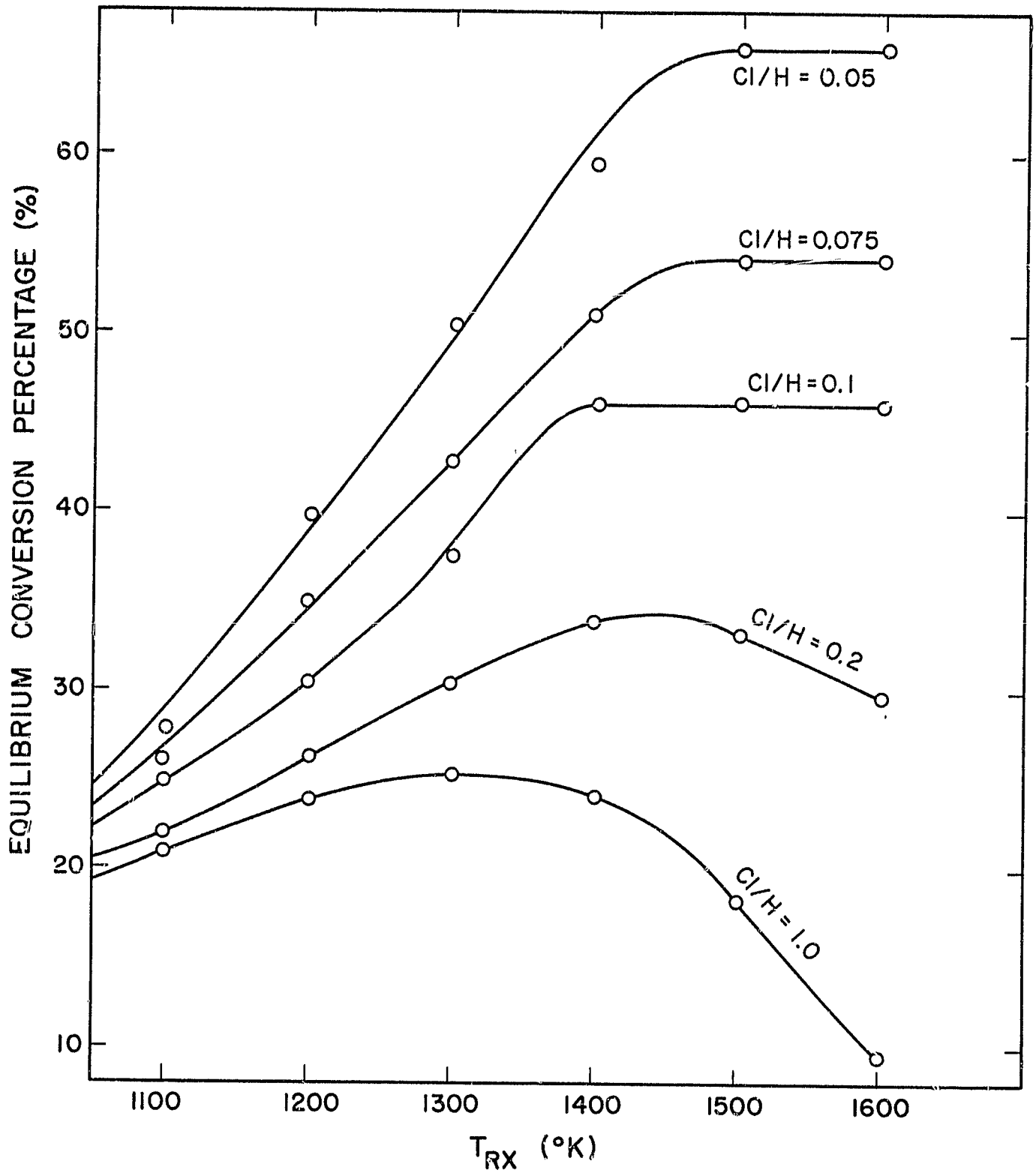

Figure 9 - Conversion Efficiency From $SiHCL_3$ at Various H_2 Dilutions as a Function of Temperature

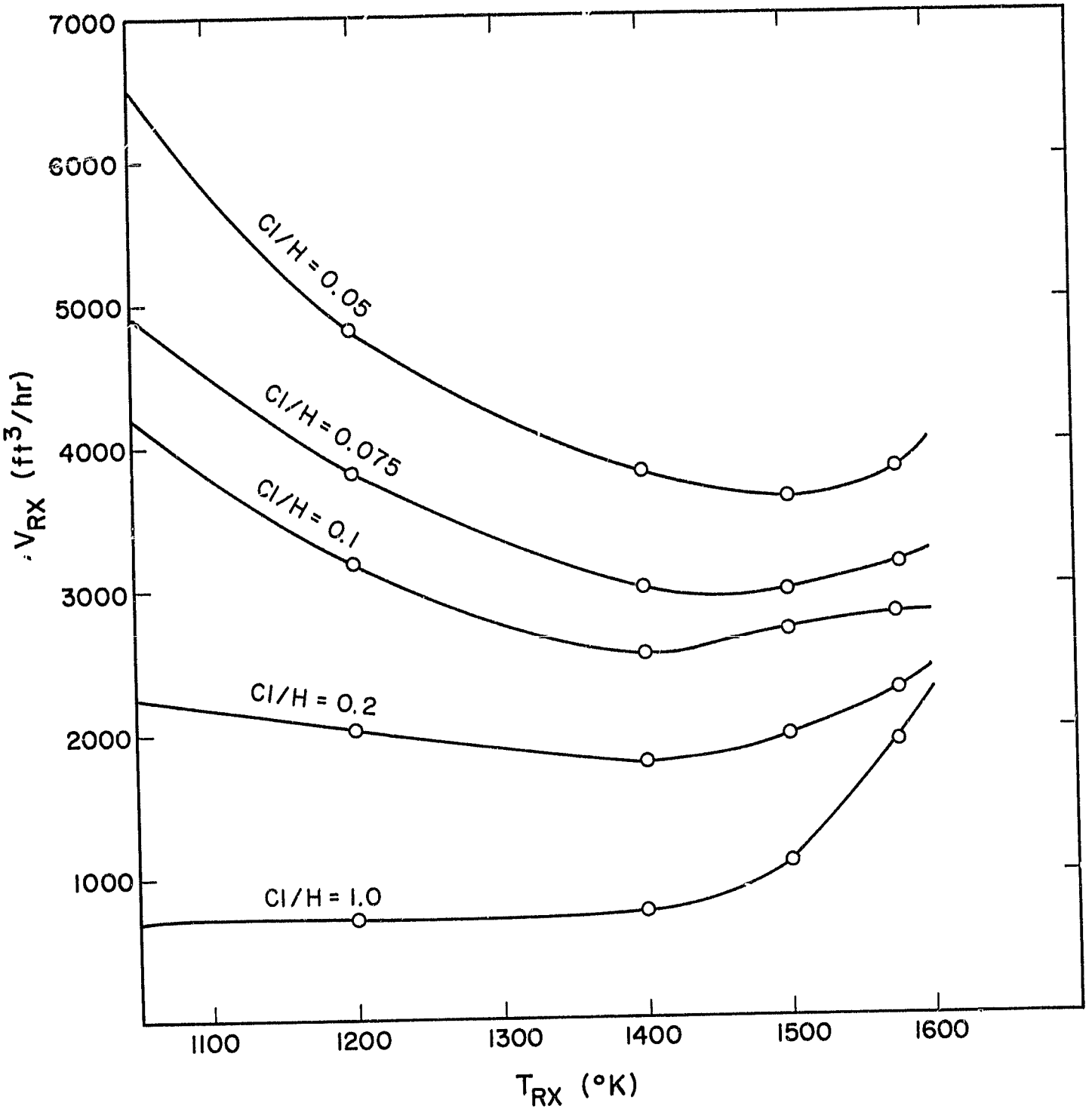

Figure 10 - Total Gas Flow Rate to Yield 0.5Kg/hr of Si at Various H_2 Dilutions of $SiHCL_3$ as a Function of Reaction Temperature

9.1.2 Power Requirement Estimates

The estimate is based on the chemical stoichiometry shown in Table IV. Table V shows the power requirements for the base case. By tripling the gas enthalpy requirements of the base case and assuming 40% of the gas enthalpy can be used to preheat, an approximate maximum of 17kw is needed.

9.2 Heater Design Calculations

From section 9.1.2 an approximate maximum 17kw power must be delivered by the main heater. 220V 100A service to our building is transformed by a 24KVA transformer to about 22 volts and 1000 amps. The theoretical length and cross section of the Grafoil® heating elements are derived as follows: (knowing an estimated resistivity for Grafoil® to be 7×10^{-4} ohm -cm and that two sheets, each .015" thick, on opposite sides of the reactor vessel, are desired.)

From $V = IR$ and $R = \rho\left(\frac{L}{DW}\right)$ the ratio of the length to the depth of each sheet is $\frac{L}{D} = \frac{V}{I}\frac{W}{\rho} = \left(\frac{22 \text{ volts}}{1000 \text{amps}}\right)\left(\frac{2 \times .015 \times 2.54}{7 \times 10^{-4} \text{ohm-cm}}\right) = 2.4$

where V = voltage (volts)

I = current (amps)

R = resistance (ohms)

ρ = resistivity (ohm -cm)

L = length of element

D = depth of element

W = thickness of element

Table V

Process Heat Requirements: 0.5 kg/hr, 30% yield

	Power Input, KW
Inlet gas enthalpy (R.T. to 1300°K):	
H_2 (312 CFH,STP)	3.2
$SiHCl_3$ (47 CFH,STP)	1.6
	4.8
Reaction heat (Stoichiometry of Table I):	(-0.2)
*Reactor furnace heat loss @ 1300°K (estimated):	6.0
Silicon meltdown heat (estimated):	2.5
Approximate total power required	13.1

*From experience when using graphite insulation of $1\frac{1}{2}$ inch thick at 1000°C the power dissipated equals .45kw/ft^2.

The element clamping bars are 12" apart which determines the length; therefore, the theoretical depth is $\frac{12 \text{ in.}}{2.4} = 5$ inches.

9.3 Primary Heat Exchanger Design Calculations

Assuming pure hydrogen streams, three basic equations were used in an iterative procedure to estimate the surface area required to recover heat from the by-product gases.

1) Q recovered = U A ΔT_{Lm} where U is the overall heat transfer coefficient estimated to be 7 $\frac{\text{BTU}}{\text{sq. ft./hr}^{\circ}\text{F}}$

2) $\Delta T_{Lm} = \frac{GTD-LTD}{Ln\left(\frac{GTD}{LTD}\right)}$ where GTD is the greater temperature difference between gases at one end of the exchanger and LTD is the lesser temperature difference between gases at the other end.

3) Q recovered = Q stream loss = $W_{H2}\ Cp_{H2}\ \Delta T_{H2}$

Example Trial Calculations

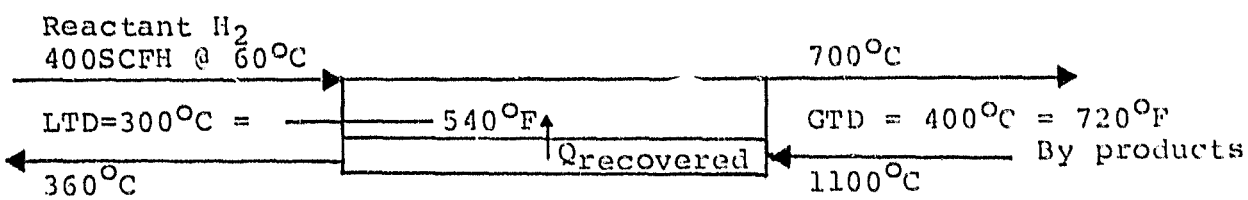

$$Q_{stream\ loss} = 400\text{SCFH} \times \frac{\text{mole}}{.79\text{SCF}} \times \frac{2\text{gm}H_2}{\text{mole}} \times \frac{7.1\text{cal}}{\text{gm}\ ^{\circ}\text{C}} \times 640^{\circ}\text{C} \times \frac{\text{BTU}}{252\text{cal}}$$

$$= 18{,}000\ \frac{\text{BTU}}{\text{hr}} \times \frac{\text{kw hr}}{3{,}414\text{BTU}} = 5\text{kw}$$

$$Q_{stream\ loss} = Q_{recovered} = 1800\ \frac{\text{BTU}}{\text{hr.}} = \frac{7\ \text{BTU}}{\text{hr sq. ft}^{\circ}\text{F}}\ (A)\ \Delta T_{LM}$$

$$\Delta T_{LM} = \frac{720-540}{\text{Ln}\left(\frac{720}{540}\right)} = \frac{180}{\text{Ln } 1.3} = 625^{\circ}F$$

$$A = (18000 BTU/hr)/(7 \frac{BTU}{sq.\ ft^{\circ}F} \times 625^{\circ}F)$$

A = 4.11 sq. ft transfer surface