N O T I C E

THIS DOCUMENT HAS BEEN REPRODUCED FROM MICROFICHE. ALTHOUGH IT IS RECOGNIZED THAT CERTAIN PORTIONS ARE ILLEGIBLE, IT IS BEING RELEASED IN THE INTEREST OF MAKING AVAILABLE AS MUCH INFORMATION AS POSSIBLE

JPL-5030-470

DOE/ET 13032-2
Distribution Category UC-90c

(NASA-CR-164949) ASSESSMENT OF ADVANCED COAL GASIFICATION PROCESSES (Jet Propulsion Lab.) 200 p HC A09/MF A01 CSCL 07D

N82-11146

Unclas
G3/25 08285

# Assessment of Advanced Coal Gasification Processes

John McCarthy
Joseph Ferrall
Thomas Charng
John Houseman

June 1981

Prepared for

**U.S. Department of Energy**
Morgantown Energy Technology Center

Through an agreement with

**National Aeronautics and Space Administration**

by

**Jet Propulsion Laboratory**
California Institute of Technology
Pasadena, California
(JPL Publication 81-45)

5030-470

DOE/ET 13032-2
Distribution Category UC-90c

# Assessment of Advanced Coal Gasification Processes

John McCarthy
Joseph Ferrall
Thomas Charng
John Houseman

June 1981

Prepared for

**U.S. Department of Energy**
Morgantown Energy Technology Center

Through an agreement with

**National Aeronautics and Space Administration**

by

**Jet Propulsion Laboratory**
California Institute of Technology
Pasadena, California
(JPL Publication 81-45)

Prepared by the Jet Propulsion Laboratory, California Institute of Technology, for the U.S. Department of Energy through an agreement with the National Aeronautics and Space Administration (Interagency Agreement No. DE-AI21-77ET 13032).

This report was prepared as an account of work sponsored by the United States Government. Neither the United States nor the United States Department of Energy, nor any of their employees, nor any of their contractors, subcontractors, or their employees, makes any warranty, express or implied, or assumes any legal liability or responsibility for the accuracy, completeness or usefulness of any information, apparatus, product or process disclosed, or represents that its use would not infringe privately owned rights.

Reference herein to any specific commercial product, process, or service by trade name, trademark, manufacturer, or otherwise, does not necessarily constitute or imply its endorsement, recommendation, or favoring by the United States Government or any agency thereof. The views and opinions of authors expressed herein do not necessarily state or reflect those of the United States Government or any agency thereof.

ACKNOWLEDGMENT

The authors are grateful to the following individuals and the organizations they represent for providing the necessary data and information necessary to make this assessment:

Richard E. Gannon, AVCO Everett Research Laboratory Inc.
Anthony J. Simpkin, Bell Aerospace Textron
Daniel R. Kahn, Rockwell International
Charles A. Euker, Exxon Corp.

We are also grateful to Henry H. Hsu, who helped in the earlier stages of the assessment.

## ABBREVIATIONS AND TERMS USED

| | |
|---|---|
| AGA | American Gas Association |
| Bench Scale Unit | A small scale laboratory unit for testing process concepts and operating parameters as a first step in the evaluation of a process. |
| BFW | Boiler feed water |
| Bi-Gas Process | A two-staged, slagging, entrained flow coal gasification process being developed by Bituminous Coal Research, Inc. in a 100 TPD pilot plant in Homer City, Penn. |
| BTX | Benzene, toluene, xylene |
| CCG | Catalytic Coal Gasification |
| CS/R | Cities Service/Rockwell |
| DAF | Dry ash-free |
| Demonstration Plant | A fully integrated process plant containing all units required to convert coal to SNG in a near commercial unit sized facility. |
| Dense Phase Feeding | The transport of pulverized coal by pressurized gas vehicle where solids predominate. |
| DOE | Department of Energy |
| EPRI | Electric Power Research Institute |
| ERDA | Energy Research and Development Administration |
| Eyring R. I. Gasifier | A single-stage, slagging, entrained flow, 100 lb/hr coal gasifier operated by the Eyring Research Institute of Provo, Utah. |
| FBC | Fluid Bed Gasifier |
| FGD | Flue Gas Desulfurization |
| GPM | Gallons per minute |
| GRI | Gas Research Institute |
| HHV | Higher (or gross) heating value |
| High BTU Gas | Gas with a higher heating value over 900 Btu/SCF |
| HMF | High mass flux |

## ABBREVIATIONS AND TERMS USED (Cont.)

| | |
|---|---|
| HTG | High Throughput Gasifier |
| Integrated Process Development Unit (IPDU) | Several integrated systems used to study the effects of process variables on performance, sized between a bench-scale unit and a pilot plant. |
| Low Btu Gas | Gas with a higher heating value less than 350 Btu/SCF |
| LPP | Large Pilot Plant |
| Maceral | A solid, naturally occurring organic material of plant origin found in coal. |
| MAF | Moisture, ash-free |
| Medium Btu Gas | Gas with a higher heating value frm 350-900 Btu/SCF |
| MF | Moisture free |
| M-Gasoline | A high octane gasoline product produced from methanol by the M-Gasoline process. |
| MHD | Magnetohydrodynamics |
| MMSCFD | Million standard cubic feet per day |
| msec | Milliseconds |
| MW | Megawatt |
| PDU | Process Development Unit; a system used to study the effects of process variables on performance, sized between a bench-scale unit and a pilot plant. |
| Pilot Plant | A process plant containing many of the processes of a commercial unit but on a smaller scale for the purpose of studying the technical and economic feasibility of the process. |
| Saarberg/Otto Process | A single-stage, slagging, entrained flow coal gasifier being developed by Dr. C. Otto and Co. G. m.b.H. in a 264 TPD demonstration plant in West Germany. |
| SCFM | Standard cubic feet per minute |
| SNG | Substitute or synthetic natural gas conforming to pipeline gas standards. |
| SRT | Short residence time |
| Synthesis Gas (Syngas) | A gas mixture consisting mostly of CO and $H_2$. |

## ABBREVIATIONS AND TERMS USED (Cont.)

| | |
|---|---|
| ST/SD | Standard tons (2000 lbs.) per stream day |
| T/D (TPD) | Tons per day |
| Thermal Efficiency | Equal to 100% times the HHV of the product SNG divided by the sum of the equivalent HHV of the feed coal plus imported electricity. |
| TPH | Tons per hour |
| Vitrain | A series of macerals that form the humic fraction of coal seams and are produced by the gelification and gradual metamorphosis of cell wall substances. |

## ABSTRACT

This report represents a technical assessment of the following advanced coal gasification processes:

- o AVCO High Throughput Gasification (HTG) Process
- o Bell Single - Stage High Mass Flux (HMF) Process
- o Cities Service/Rockwell (CS/R) Hydrogasification Process
- o Exxon Catalytic Coal Gasification (CCG) Process

Each process is evaluated for its potential to produce SNG from a bituminous coal. In addition to identifying the new technology these processes represent, key similarities/differences, strengths/weaknesses, and potential improvements to each process are identified. The AVCO HTG and the Bell HMF gasifiers share similarities with respect to: short residence time (SRT), high throughput rate, slagging and syngas as the initial raw product gas. The CS/R Hydrogasifier is also SRT but is non-slagging and produces a raw gas high in methane content. The Exxon CCG gasifier is a long residence time, catalytic, fluidbed reactor producing all of the raw product methane in the gasifier. The report makes the following assessments:

1) while each process has significant potential as coal gasifiers, the CS/R and Exxon processes are better suited for SNG production;

2) the Exxon process is the closest to a commercial level for near-term SNG production; and

3) the SRT processes require significant development including scale-up and turndown demonstration, char processing and/or utilization demonstration, and reactor control and safety features development.

TABLE OF CONTENTS


Page

ABBREVIATIONS AND TERMS USED . . . . . iv

ABSTRACT . . . . . vii

I. OVERVIEW AND ASSESSMENTS

1.0 INTRODUCTION . . . . . I-1

1.1 Origin. . . . . I-1
1.2 Purpose of Assessment . . . . . I-1
1.3 Processes Assessed. . . . . I-2
1.4 Economic Incentives . . . . . I-5

2.0 STATEMENT OF WORK. . . . . I-6

3.0 SUMMARY. . . . . I-7

3.1 General . . . . . I-7
3.2 Comparison of Overall Process Schemes . . . . . I-8
3.3 Comparison of Process Gasifiers . . . . . I-11
3.4 Key Similarities and Differences. . . . . I-13
3.5 Assessments . . . . . I-13

3.5.1 General Assessments. . . . . I-14
3.5.2 Specific Assessments . . . . . I-16

4.0 FLASH PYROLYSIS - A GENERAL COMMENTARY . . . . . I-20

5.0 REFERENCES . . . . . I-22

II. ASSESSMENT OF AVCO HTG PROCESS

1.0 SUMMARY. . . . . II-1

2.0 CURRENT STATUS OF DEVELOPMENT. . . . . II-2

3.0 PROCESS DESCRIPTION (including BLOCK FLOW DIAGRAM and MATERIAL BALANCE) . . . . . II-4

4.0 STRENGTHS AND WEAKNESSES . . . . . II-8

5.0 POTENTIAL IMPROVEMENTS . . . . . II-11

6.0 COMPONENTS REQUIRING DEVELOPMENT . . . . . II-13

7.0 DEVELOPMENT STATUS DETAILS . . . . . II-14

8.0 FUNDAMENTALS OF SRT GASIFICATION AS APPLIED TO THE AVCO HTG GASIFIER. . . . . II-26

9.0 REFERENCES . . . . . II-30




PRECEDING PAGE BLANK NOT FILMED

TABLE OF CONTENTS

Page

III. ASSESSMENT OF BELL HMF GASIFICATION PROCESS

1.0 SUMMARY. . . . . .III-1

2.0 CURRENT STATUS OF DEVELOPMENT. . . . . .III-2

3.0 PROCESS DESCRIPTION (including Block Flow Diagram and Material Balance). . . . . .III-3

4.0 STRENGTHS AND WEAKNESSES . . . . . .III-10

5.0 POTENTIAL IMPROVEMENTS . . . . . .III-13

6.0 COMPONENTS REQUIRING DEVELOPMENT . . . . . .III-28

7.0 DEVELOPMENT STATUS DETAILS . . . . . .III-29

8.0 FUNDAMENTALS OF SRT GASIFICATION AS APPLIED TO THE BELL HMF GASIFIER . . . . . .III-35

9.0 REFERENCES . . . . . .III-39

IV. ASSESSMENT OF CS/R HYDROGASIFICATION PROCESS

1.0 SUMMARY. . . . . .IV-1

2.0 CURRENT STATUS OF DEVELOPMENT. . . . . .IV-2

3.0 PROCESS DESCRIPTION (including Block Flow Diagram and Material Balance). . . . . .IV-5

4.0 STRENGTHS AND WEAKNESSES . . . . . .IV-11

5.0 POTENTIAL IMPROVEMENTS . . . . . .IV-13

6.0 COMPONENTS REQUIRING DEVELOPMENT . . . . . .IV-20

7.0 REFERENCES . . . . . .IV-24

V. ASSESSMENT OF EXXON CCG PROCESS

1.0 SUMMARY. . . . . .V-1

2.0 CURRENT STATUS OF DEVELOPMENT. . . . . .V-1

3.0 PROCESS DESCRIPTION (including Block Flow Diagram and Material Balance). . . . . .V-3

4.0 STRENGTHS AND WEAKNESSES . . . . . .V-9

## TABLE OF CONTENTS


Page

5.0 POTENTIAL IMPROVEMENTS . . . . . .V-13

6.0 DEVELOPMENT STATUS DETAILS . . . . . .V-16

7.0 REFERENCES . . . . . .V-24


## LIST OF FIGURES


I-1 Advanced Coal Gasification Processes - Conceptual Commercial Plant Overall Key Block Comparison . . . . . .I-23

I-2 Coal Gasification Reactors - Schematic Comparison. . . . . .I-24

II-1 AVCO HTG Coal-To-SNG Process - AVCO HTG Process Block Flow Diagram. . . . . II-31

II-2 AVCO Entrained Bed Gasifier Used in Low BTU Gas Program. . . . . .II-32

II-3 AVCO Explosion Chamber for Single-Pulse Coal PyroLysis Experiments. . . . . .II-33

II-4 Pyrolysis/Char-Combustor Heat Load Relationships . . . . . .II-34

III-1 Bell Single-Stage HMF Coal-to-SNG Block Flow Diagram . . . . . .III-41

III-2 % Carbon Conversion vs. Oxygen/Coal Ratio for Bituminous Coal (Bell and Eyring R. I. data) . . . . . .III-42

III-3 Molten-Slag Bath Concept for Bell's Single-Stage HMF Gasifier. . .III-43

III-4 Molten-Slag Bath with Secondary Injection for Bell's HMF Gasifier.III-44

III-5 Air-Blown Bell HMF Gasifier Test Facility Schematic. . . . . .III-45

III-6 Oxygen-Blown Bell HMF Gasifier Test Facility Schematic . . . . . .III-46

III-7 Typical Reactor Configuration Used in Bell HMF Oxygen-Blown Testing. . . . . .III-47

III-8 Upgraded Bell HMF Test Facility Schematic for Oxygen-Blown Reactor Program. . . . . .III-48

III-9 Schematic of Reaction Fundamentals of Bell's Single-Stage and Secondary Injection HMF Gasifier . . . . . .III-49

IV-1 CS/R Hydrogasification Block Flow Diagram. . . . . .IV-25

V-1 Process Block Flow Diagram - Exxon Catalytic Coal Gasification Process. . . . . .V-25

V-2 Proposed Revised Schedule for SNG Program. . . . . .V-27

## LIST OF FIGURES (cont'd)


Page

V-3 Exxon CCG PDU Flow Diagram . . . . . .V-28

V-4 Exxon CCG PDU Gas Separation System. . . . . .V-29

V-5 Exxon CCG Cryogenic Distillation of Methane. . . . . .V-30


## LIST OF TABLES


I-1 Comparative Features of Gasifier Processes . . . . . .I-25

I-2 Summary of Major Process Units . . . . . .I-26

I-3 Summary of Gasifiers' Comparison . . . . . .I-27

I-4 Key Similarities and Differences . . . . . .I-28

II-1 Material Balance for AVCO HTG Coal-to-SNG Process. . . . . .II-35

III-1 Material Balance for Bell Single-Stage HMF Coal-to-SNG Process. . . . . .III-50

III-2 Effect of Potential Improvements of the Bell HMF Gasifier to be Investigated by Bell . . . . . .III-51

III-3 Base Case (Bell Single-Stage HMF) Gas Cost Sensitivity to Critical Assumptions . . . . . .III-52

III-4 Bell HMF Gasifier Data . . . . . .III-53

IV-1 CS/R Hydrogasification Process Material Flow Balance . . . . . .IV-26

# SECTION I
# OVERVIEW & ASSESSMENTS

# SECTION I
# OVERVIEW AND ASSESSMENTS

## 1.0 INTRODUCTION

### 1.1 Origin

This report was written at the Jet Propulsion Laboratory under an Interagency Agreement with NASA and the Department of Energy. The project had its origin at DOE Headquarters, Office of Coal Conversion and was transferred to the Morgantown Energy Technology Center for implementation.

### 1.2 Purpose of Assessment

The production of SNG from coal is an attractive way of utilizing coal in an environmentally acceptable way to produce a product which is totally interchangeable in today's energy market. However, today there are no large coal gasification plants producing SNG in the United States as the relative abundance and low price of natural gas has made the economic feasibility for SNG plants unattractive. As the price of natural gas is being deregulated, and as our gas reserves become depleted and gas becomes more expensive to recover, the production of SNG from coal will become more attractive. Since the coal gasification technology that is commercially available today has considerable potential for improvement, research and development of new gasification processes is underway to make coal gasification more efficient, more economical, and more environmentally acceptable than the older processes.

The purpose of this study is to provide a technical assessment of four of these new gasification processes. As the research and development work on these processes is proceeding, continual evaluation of these emerging technologies and their potential for commercialization is required. This study should be useful in planning and preparing the development programs in coal gasification.

Two premises inherent in this work are pointed out here to assist in the proper application of the findings:

(a) The assessment of the processes does not constitute a comparison of the processes

An effort was made to limit comparisons between processes except where useful to the overall assessment and where comparisons could easily be made. Each process was assessed separately and is reported individually in Sections II, III, IV and V. Section I, although containing several comparison tables, is meant to serve more as a summary or overview of the processes in a grouping rather than as a comparison between processes.

(b) The assessment is a technical assessment

Emphasis was placed on identifying new technology and its inherent advantages and disadvantages. Although the most comprehensive barometer of a process's potential is the required product selling price in dollars per MMBtu, these numbers are not reported here since economics have not been developed on equal bases between processes and hence publishing product prices would invite unfair comparisons (however, economics were used to evaluate potential improvements to each process on an incremental basis). The assessment should be viewed as a technical assessment of four different processes at their current stage of development.

## 1.3 Processes Assessed

Four processes were chosen by DOE for technical assessment by JPL and a brief description of these processes is given below:

### 1.3.1 AVCO HTG (High Throughput Gasifier) Process:

A two-stage entrained flow, short residence time, slagging gasifier employing a rapid pyrolysis stage and a char combustor stage. Coal, oxygen, and steam are reacted to produce a syngas containing some methane. The process is being developed by AVCO Everett Research Laboratories, Inc. of Everett, Massachussetts.

### 1.3.2 Bell Single-Stage HMF (High Mass Flux) Process:

A single-stage, entrained flow, short residence time, slagging gasifier. Coal, oxygen, and steam are reacted to produce a syngas with very

little methane. The process is being developed by the Bell Aerospace Textron Company of Buffalo, New York.

### 1.3.3 CS/R (Cities Service/Rockwell) Hydrogasification Process:

A single-stage, entrained flow, short residence time gasifier. Coal and hydrogen are reacted to produce a raw product gas high in methane. The process is being developed presently by the Rockwell International Corporation of Canoga Park, California and Cities Service Corporation.

### 1.3.4 Exxon CCG (Catalytic Coal Gasification) Process:

A single-stage, fluidized bed, catalytic gasifier. Coal impregnated with catalyst and steam in the presence of syngas are reacted to produce methane and $CO_2$. The process is being developed by the Exxon Corporation of Baytown, Texas.

### 1.3.5 Stage of Development

An arbitrary classification of three stages of development can be made which clarifies why the four processes are termed "advanced" or "emerging":

| Stage of Development | Years to Commercialization | Coal Gasification Processes |
|---|---|---|
| Commercial | 0 | Lurgi (dry bed)<br>Koppers-Totzek |
| Transition | Less than 5 | Lurgi (slagging)<br>Shell-Koppers<br>Texaco |
| Advanced or Emerging | More than 5 | AVCO HTG<br>Bell HMF<br>CS/R Hydrogasification<br>Exxon CCG |

The term advanced is used to highlight one or more of the potential advantageous features of the new technology areas that each process has compared to the commercial or transition processes as follows:

- Higher carbon conversion to methane during gasification
- Higher overall thermal efficiency
- Shorter gasifier residence time
- Negligible tars or undesirable liquids produced in gasifier
- Improved coal feeding and injection systems
- Effective catalytic gasification
- Simpler overall processing scheme to produce SNG

As the assessment progressed, it became obvious that each process fulfilled some of the above features but none fulfilled all of them. For example, the AVCO HTG and Bell Single-Stage HMF processes produce a syngas with little methane yet they do give higher overall thermal efficiencies, shorter residence times, yield negligible tars, and include improved coal feeding systems. In the case of the Bell Single-Stage HMF process, the methane yield from the gasifier and the overall thermal efficiency compared to the other advanced processes are lower. By making such a comparison, the Bell process could be discounted as a coal gasification process (assuming capital costs for each are similar). Again, the assessment loses much of its value if comparisons are seen as the main thrust of this study rather than the technical assessment aspect. In assessing each individual process, rather than comparing the four processes, the individual merits of the emerging technology with respect to commercial or transition coal gasifiers can be highlighted. It was recognized that the advanced processes might have merits that could be synergistically combined or that could be utilized in the commercial or transition processes as cost-effective improvements.

### 1.3.6 SNG versus Syngas

Although the assessment was initiated by targeting on gasification processes to produce SNG, it was recognized during the course of the study that a distinction should be made between good methane producers and good syngas producers. However, the further development of good syngas generators should not be overlooked since it is expected that the syngas generators will have a wider application in coal conversion than the SNG generators. In this regard, the AVCO HTG and Bell Single-Stage HMF reactors are classified as good syngas

generators and the CS/R Hydrogasification and Exxon CCG as good methane generators.

## 1.4 Economic Incentives

As mentioned above, this is a technical assessment and economic comparisons between the four processes are not made. However, it is worthwhile discussing the incentives for further developing these processes. These incentives are expressed as thermal efficiency and relative capital costs to the Lurgi (non-slagging) process as given below:

| | Coal to SNG (1) | |
|---|---|---|
| | % Thermal Efficiency | Relative Capital Cost |
| Lurgi (dry bed) | 55 | 1.0 |
| AVCO HTG | 68 | 0.75 |
| CS/R Hydrogasification (No BTX yield) | 58 | 0.89 |

| | Coal to Med BTU Gas (2) | |
|---|---|---|
| | % Thermal Efficiency | Relative Capital Cost |
| Lurgi (dry bed) | 52% | 1.0 |
| Bell Single-Stage HMF | 76% | 0.69 |

The above numbers were taken from comparisons made in the literature; they do not represent a detailed engineering design and should be considered preliminary. They are used here only to show the potentially significant efficiency and capital cost improvements of the Bell, AVCO and CS/R processes over the Lurgi process (no such comparison for the Exxon CCG was available in the literature).

## 2.0 STATEMENT OF WORK

The objectives of this assessment are to review four advanced coal gasification processes (AVCO, Bell, Rockwell and Exxon) for the production of SNG and to:

- o Characterize and evaluate these new technologies
- o Identify key similarities/differences, strengths/ weaknesses, and potential improvements for each process.
- o Recommend activities for further development.

This assessment is based on the following main elements included in the original scope of work:

- o Identify and characterize new technology items in each gasification process.
- o Evaluate new technologies in the framework of a conceptual system block flow diagram with material and heat balances projected to a commercial level producing SNG at a rate of 250 billion Btu/day.
- o Identify areas of potential improvements relative to the gasifier and the conceptual overall process
- o Identify key similarities and differences and essential strengths and weaknesses of each process.
- o Recommend activities for continued development.

Included in this scope were visits, meetings and discussions with each developer to view facilities and to determine the current status of development. Investigating the status of development resulted in varying degrees of information on test results and the data upon which the developers' overall process concepts were based. In some cases a material balance and/or a complete process concept was not available. Much of the effort was involved in establishing these in conjunction with the developers before the analysis could proceed.

## 3.0 SUMMARY

### 3.1 General

Four advanced coal gasification processes were reviewed in this assessment. These included processes based on the AVCO HTG, the Bell Single-Stage HMF Gasifier, the CS/R Hydrogasification and the Exxon CCG. The AVCO HTG and the Bell HMF gasifiers share similarities with respect to: short residence time (SRT), high throughput rate, slagging, and syngas as the initial raw product gas. The CS/R Hydrogasifier is also short residence time but is non-slagging, and produces raw gas high in methane content. The Exxon CCG gasifier is a long residence time catalytic fluid bed reactor producing all of the final product methane in the gasifier. The Exxon CCG process is the only one of the four which does not require a separate shift converter or methanator.

While both the CS/R Hydrogasification and the Exxon CCG processes are considered to be methane producers, they are quite different in gasifier design and subsequent processing steps. The CS/R process employs an SRT gasifier in a hydrogen-rich environment to produce methane, while the Exxon CCG process gasifies catalyst-impregnated coal in a fluid bed reactor with steam in a syngas environment to produce methane. Due to these differences in the gasification mechanism, the CS/R process needs a hydrogen plant and an oxygen plant to support the hydrogasification reaction, while the Exxon CCG process does not. Exxon CCG needs a catalyst recovery plant to enhance the economics of the process.

The above features are highlighted in Table I-1 and compared to the Lurgi and Texaco gasifiers. The Exxon process utilizes $K_2CO_3$ catalyst effectively to give the highest carbon conversion to $CH_4$ and subsequently the least complex gas processing scheme. However, the solids processing is probably the most complex of all processes, including the Lurgi and Texaco processes, since catalyst impregnation and recovery are required. The CS/R process has a relatively high carbon conversion to $CH_4$. However, its overall thermal efficiency while higher than the Lurgi process, is perhaps the lowest of the advanced gasification processes which is reflected by the high complexity of its gas/liquids processing scheme. The CS/R also produces BTX liquids, a clean and

valuable by-product (if the HHV of BTX is included, the thermal efficiency increases to 61%). The AVCO and Bell processes as pointed out above are very similar yet the overall thermal efficiency for AVCO is significantly higher than any of the processes.

The AVCO and Bell processes are in an early pilot stage of gasifier testing. The CS/R process is in a pilot and PDU stage and the Exxon is in a PDU stage. The Exxon CCG is the most advanced in development among the four processes.

More summary detail relative to the individual processes can be found in the Summary Section of the respective process.

The remainder of this Summary contains the following sub-sections:

- o A general comparison of the four process schemes.
- o A listing of key similarities and differences of the four processes.

The next sub-section is titled Assessments. This is comprised of recommendations and conclusions reached as a result of this investigation.

## 3.2 Comparison of Overall Process Schemes

The following briefly describes the process scheme of each of the following advanced coal gasification processes:

- o AVCO High Throughput Gasification (HTG) Process
- o Bell Single-Stage High Mass Flux (HMF) Process
- o CS/R (Cities Service/Rockwell) Hydrogasification Process
- o Exxon Catalytic Coal Gasification (CCG) Process

The above processes are also depicted on Figure I-1, for comparing the differences of the four processes with respect to the major components in each process plant. Table I-2 summarizes the major units of each process.

### 3.2.1 AVCO HTG Process

Feed coal is pulverized to 70% through 200 mesh and dried to about 2 wt.% moisture. The coal and steam are injected into the pyrolyzer which operates at 550 psig. Hot gases from the combustor entrain the feed coal and gasify about 48% of its carbon, to produce $H_2$, CO, $CO_2$ and $CH_4$. The raw product gas and the char exit the pyrolyzer into a cyclone where the char is separated. The char is then recycled to the upstream combustor where the char is totally combusted with oxygen. The resultant hot gases then proceed to the pyrolyzer supplying the required heat for coal pyrolysis. The coal minerals form a molten slag in the combustor and continuously flow down onto the inner wall surface as a protective refractory. The excess slag is trapped out at the bottom of the combustor, water quenched and disposed off-site.

The gas from the cyclone downstream of the pyrolyzer is routed to a heat recovery system where the sensible heat of the gas is recovered to produce H.P. (1500 psig) steam. Then the gas is water scrubbed to remove the remaining solid fines.

The solid-free gas flows through the CO-shift, the acid gas removal, and the bulk methanation system. Approximately 8 volume percent of the treated gas is withdrawn downstream of the acid gas removal unit and consumed as the plant fuel. The remaining gas is routed to the bulk methanation system for producing pipeline quality SNG.

### 3.2.2 Bell Single-Stage HMF Process

Coal, oxygen and steam are fed to the single-stage slagging reactor, operating at 2530°F and 500 psia where 90% of the coal carbon is gasified. The reactor effluent is quenched to 1900°F with water. The shattered slag is then separated from the raw product gas and sent to disposal. The raw product gas, containing unconverted char, proceeds to the heat recovery system which cools the gas stream from 1900°F to 600°F by generating steam. The gas proceeds to a cyclone for char separation, and then to simultaneous cooling and water scrubbing for final removal of the solid fines. The scrubbed gas stream (saturated with water) is routed to the shift system at 345°F, where the reaction is controlled to produce an effluent stream with a $H_2$ to CO ratio

of 3. The gas stream then proceeds to a selective acid gas removal unit where the $H_2S$ rich stream is routed to the sulfur recovery unit, and the $CO_2$ stream to disposal. The cleaned syngas then proceeds to the bulk methanation unit for SNG production. The produced SNG is then compressed and dehydrated to pipeline specification for sales.

### 3.2.3 CS/R Hydrogasification Process

The CS/R hydrogasification process includes a coal hydrogasification SRT reactor followed by a char oxygasifier reactor to produce $H_2$. It uses a hot gas and solids heat recovery step to partially preheat the recycle $H_2$. It also can produce BTX by-product along with the raw product gas. Due to the high carbon conversion to $CH_4$ in the hydrogasifier (45% per pass) only trim methanation is required with no shift conversion in the product gas stream. An $O_2$ plant is required mainly for the char/coal oxygasifier for $H_2$ production but also for preheating of the recycle $H_2$ by partial combustion. No catalyst is employed.

### 3.2.4 Exxon CCG Process

The coal is crushed, dried, impregnated with potassium catalyst, dried again, and then fed to the fluidized bed gasifier. The gasifier also receives steam and recycle syngas ($H_2$ and CO) which is preheated to 1550°F. The gasifier operates at 1275°F and 500 psig. The CCG gasifier involves the reactions of coal gasification, shift and methanation. The resultant heat of reaction is essentially thermo-neutral. The net heat requirement for the gasifier is provided by preheating the recycle syngas stream. Approximately 51% of the coal carbon is converted to $CH_4$ in the gasifier.

The raw product gas from the gasifier proceeds through cooling (by generating H.P. steam) from 1257°F to 540°F, water scrubbing for fine solids removal from 540°F to 373°F and then low level heat recovery from 373°F to 313°F. The gas is cooled to 120°F prior to entering the selective acid gas removal unit where the $H_2S$ rich stream is fed to the sulfur recovery unit, and the $CO_2$ stream is sent to disposal. The treated process gas stream is then routed to the cryogenic separation unit where methane is separated from the

syngas stream (CO and $H_2$). The latter is recycled to the gasifier, and the methane fraction is heat exchanged and compressed to the SNG pipeline pressure for sales.

Approximately 90 percent of catalyst is recovered from the char/ash in the Catalyst Recovery Unit by a $Ca(OH)_2$ digestion process. The recovered catalyst is recycled and added to catalyst makeup to be reused in impregnation.

### 3.3 Comparison of Process Gasifiers

The following are brief descriptions of the advanced coal gasifiers:

(The schematic drawing of each of the gasifiers is depicted on Figure I-2 which shows the essential elements of the gasifier such that an overall general comparison can be made. Table I-3 summarizes the comparison of the gasifiers.)

#### 3.3.1 AVCO HTG Gasifier

The AVCO gasifier consists of two parts. The first part is a char combustor, and the second a coal pyrolyzer. The flow directions for the combustor and the pyrolyzer are down and horizontal flows, respectively. Both reactors are close coupled and operated in an entrained flow regime. The combustor operates at 600 psig and 2400 to 2900°F, and the pyrolyzer at 550 psig and 1600°F measured at the exit. The gas residence time in the pyrolyzer is in a range of 20 to 40 milliseconds.

The raw gases $H_2$, CO, $CO_2$ and $CH_4$ are produced by pyrolysis followed by a steam-volatiles stabilization. The remaining char is separated from the raw gas and recycled to the combustor where the char is burned with oxygen. The resultant hot gas from the combustor supplies the heat requirement for the downstream pyrolysis.

The coal minerals in the form of molten slag are trapped out at the bottom of the combustor by quenching in a water bath attached thereto. The shattered slag is then disposed of off-site.

### 3.3.2 Bell Single-Stage HMF Gasifier

Coal is fed to the central injector nozzle and is impinged by a co-axial stream of oxygen followed by a steam injection immediately downstream. The exothermic reaction of coal and oxygen produces enough heat to gasify the coal at 2530°F and 500 psia. At these conditions, the coal minerals form a molten slag.

The product gas consists mostly of CO and $H_2$ (56% and 31%, respectively) and lesser amounts of $H_2O$, $CO_2$, $H_2S$, $N_2$ and $CH_4$ in that order. The overall reaction can be expressed as follows:

$$\text{Coal} + \text{Steam} + \text{Oxygen} \longrightarrow \text{Raw Syngas} + \text{Slag} + \text{Char}$$

The effluents are quenched with water to 1900°F. The slag is solidified, and separated for disposal. The char is separated in a cyclone following the heat recovery from the raw syngas.

### 3.3.3 CS/R Hydrogasification Gasifier

Recycle plus makeup $H_2$ is heated to reaction temperature by reacting with $O_2$ in a preburner prior to mixing with the feed coal in the Hydrogasifier which operates at 1000 psi. The exit gas temperature of the raw product gas is 1746°F. Before quenching, this stream containing char solids exchanges heat with the recycle $H_2$ stream. The char is separated after quenching and fed to a char oxygasifier with some additional coal to produce the required makeup $H_2$ for the main hydrogasifier reaction.

The net overall reaction can be expressed by:

$$\text{Coal} + H_2 \xrightarrow{\text{heat}} CH_4 + \text{BTX} + \text{Char}$$

### 3.3.4 Exxon CCG Gasifier

The Exxon Catalytic Coal Gasifier is a fluidized bed reactor, integrating gasification, shift reaction and methanation in the single reactor. The steam gasification reaction is highly endothermic, the steam-gas shift mildly exothermic, and the methanation highly exothermic. The composite of

these three reactions is essentially thermo-neutral, and results in a significant net production of $CH_4$ and $CO_2$. The net overall reaction can be expressed by:

$$\text{Coal} + H_2O\ (\text{steam}) \xrightarrow[\text{catalyst}]{K^+} CH_4 + CO_2$$

The gasifier receives catalyst-impregnated feed coal, preheated by a slip stream of the recycle syngas. Catalyst is impregnated on the coal to catalyze the heterogeneous steam gasification and gas phase methanation reaction plus eliminate any agglomeration problems in the gasifier using caking coals. The coal bed is fluidized by the syngas-steam mixture, also preheated to compensate for the heat losses of the gasifier vessel. The gasifier is operated at 500 psig and 1275°F.

All gas phase reactions in the gasifier essentially reach equilibrium. Once the recycle syngas stream is established, there is no significant net production of CO and $H_2$. The net carbon conversion is approximately 90%, producing $CH_4$, and $CO_2$. The unconverted char and ash are disposed off-site following recovery of the catalyst.

### 3.4 Key Similarities and Differences

Table I-4 summarizes the key similarities and differences of the advanced coal gasification processes, including

- AVCO HTG
- Bell Single-Stage HMF
- CS/R Hydrogasification
- Exxon CCG

The comparisons involve the gasifier characteristics as well as the key process units included in the overall gasification plants.

### 3.5 Assessments

As a result of this study, considering the characteristics of each gasification process, the process strengths, weaknesses, advantages and

disadvantages, potential improvements and development needs, the following nine assessments are submitted. These include recommendations for further development.

### 3.5.1 General Assessments

1. The four gasification processes in this assessment were applied to the production of SNG. The question may be asked whether this is the best application for each gasifier. The Exxon and Rockwell Gasifiers were designed to produce a high methane product gas. AVCO and Bell gasifiers are better suited to producing a lower Btu product gas or some form of synthesis gas for further conversion to other products such as methanol, gas turbine fuel, Fischer-Tropsch liquids, hydrogen, etc.

It is recommended that this distinction be made so that the most suitable application of these gasifiers to the required end product be considered.

2. Considering the stages of development, relative efficiencies and basic principles (excluding economics), if one of these gasifiers had to be selected today for the production of SNG it would be Exxon's. The CS/R Hydrogasifier shows high potential but is at an earlier stage of development and requires selection, demonstration and design of several companion processes and unit operations for an integrated SNG process. The AVCO and Bell gasifiers require much more development and are in a very early stage with respect to an SNG application.

3. The success of the SRT gasifiers will depend greatly upon how well they can be scaled up and controlled. The compact size of the reactors may require multiple units or modules to reach the commercial scale. Multiple units will require feed splitting and other measurement and control devices to operate with high precision. These devices have yet to be developed or demonstrated. In the case of Rockwell, it is proposed to split the total coal feed to as many as 36 modules. This must be demonstrated and proven to be reliable. In the case of AVCO's slagging wall concept, the successful control

of slag flow, tapping and containment will be influenced by scale of operation. This also must be demonstrated.

The turn down capability of all of the SRT gasifiers will be strongly influenced by scale. The smaller the individual module or the greater the number of modules, the greater the turn down capability of the total gasification section. The slag layer and its limitations may be critical to the turn down capability and therefore scale of the gasifier module. In another respec', as the CS/R Hydrogasifier is turned down, the residence time increases and the product composition changes (e.g., reduced benzene yield).

4. In many of the gasifier processes, char is a common intermediate product. Due to the emphasis to develop the primary coal gasification process, there is scant information developed concurrently on the chars. It is recommended that, to the extent feasible, the resulting chars be defined and characterized including analyses, chemical and physical properties, handling characteristics, reactivities and suitability to further processing and use. This would eliminate a great deal of doubt and uncertainty in closing material balances in many gasification processes. In the case of Rockwell's process, the char is a major intermediate for the production of hydrogen and considerable more data are needed beyond composition.

5. As the data base increases for each process, the modeling effort should continue to be updated to fit the data. Accurate kinetic models should be developed as they could be utilized as follows:

- To optimize the reactor design
- To predict yields of untested coals.
- To perform trade-off process design studies.
- For use in scale-up design studies.
- For use as an operational and control guide in pilot plants.

6. It is recommended that, as part of DOE funded gasification development projects, each developer compile and publish a summarized reference book which should include:

- o Sources of information, including basic physical and chemical data.
- o Extent of testing.
- o Process flow diagram of test facilities including equipment sizes, control schemes, etc.
- o Selected test results including heat and material balances, conditions, lengths of runs, feed and product analyses and characterization.
- o Data correlations.

It is suggested that such a reference book be updated and published at least once per year.

### 3.5.2 Specific Assessments

7. AVCO HTG Process

a) Continue development of pyrolysis data base:

Much of the pyrolysis data has been extracted from small-scale batch equipment. Verification of data using larger scale, continuous flow reactors needs to be done.

b) Components integration:

The combustor stage has yet to be operated using coal char as a fuel. The current flow scheme for planned coal pyrolysis experimentation includes the burning of No. 2 fuel oil to produce the hot gases for the pyrolysis stage. It is recommended that the combustor be run using char. It is also recommended that the char combustor and pyrolysis stages be run simultaneously as early as possible. It makes little sense to continue fine tuning 1/2 of the system for optimum pyrolysis yields without addressing operability and characteristics of the other 1/2 of the system. Testing in the near future should include integration of the combustor and pyrolyzer so that development of special control schemes, which undoubtedly will be necessary, can proceed. Also, any unexpected effects of using char for the generation of hot gases versus using No. 2

oil on pyrolysis yields, fines removal, slag layer coating, handling of hot recycle char, etc., would be detected.

c) Combining MHD with coal gasification:
The combination of coal plus char combustor, an MHD channel and the rapid-pyrolysis stage could be employed to produce syngas and power. Further analysis to determine the technical and economic feasibility of such a system should be carried out.

8. Bell HMF Process

a) Continue development of data base for single-stage gasifier:

(1) Single-stage carbon conversion: the projected carbon conversion at the given oxygen to coal ratio for bituminous coal should be demonstrated;

(2) Recovery of ungasified carbon: the form of the ungasified carbon should be identified; in addition, recovery of the carbon as char should be demonstrated;

(3) Demonstrate the slag/char separation: the assumption that the slag captured in the slag pot will be essentially char free and that little carryover of the slag with the syngas should be demonstrated;

(4) Char composition: at this time, no data on the char composition is available;

(5) Reactivity of recycle char: once the upgraded (refer to Section III - Development Status Details, Figure III-8) facility is working, char from cyclone separation should be tested for its reactivity and carbon conversion in the gasifier by itself and as a mix with fresh coal;

(6) Char use as a boiler fuel: once the upgraded facility is working, a program to collect sufficient char for testing in a boiler should be developed.

(7) Testing with other chars: it is recommended that chars produced from other coal conversion plants be tested as a potential application for syngas generation.

(8) Validation of material balances: at this time, Bell has been unable to make a complete material balance. Material balances have been assumed by differences. Procedures should be developed in order to make an entire material balance.

b) Develop secondary injection data base: (Refer to Section III - Potential Improvements)
Operational problems with secondary-injection of coal are anticipated including agglomeration of coal particles. It is recommended that an operational, secondary-injection configuration be developed by Bell regardless of initial failures or difficulties to determine the degree of enhanced methane yield possible in a high temperature, short residence time reactor. Also, analysis procedures for detection of trace quantities of tar and soot formed by secondary-injection should be developed and utilized in this testing.

c) Investigate hydropyrolysis with secondary- injection:
Once the secondary-injection configuration is successfully tested, a stream of hot hydrogen should be added to the secondary-injection section at various rates to determine the hydrogasification to $CH_4$. This is suggested to determine what the methane yield in a hydrogasifier would be at temperatures ( 2400°F) where equilibrium suggests negligible methane yields. The Bell test facility lends itself to testing various gasifier configurations rather easily. The gasifier is

made of several removable parts; hence, fabrication and testing of different configurations can be done easily and rapidly.

d) Investigation of molten-slag bath concept:
It is suggested that an investigation of the molten-slag bath concept as applied to the Bell HMF process be made. The potential offered by this concept is a higher single pass carbon conversion which could eliminate anticipated char utilization problems. Also, a concept using the molten-slag bath with a second-stage pyrolysis section is recommended for further investigation (see Section III-Potential Improvements).

e) Catalyst application testing:
In a high temperature reactor, catalyst use is thought of as being marginally beneficial, since the reaction rates are so fast anyhow. However, some benefits could be attained including operation at lower temperatures for the same conversion, higher methane yields, reduced slagging accumulation problems, lower sulfur compounds in the syngas, and higher carbon conversions. It is recommended that performance testing be done with promising catalyst materials (see Section III - Potential Improvements).

9. <u>CS/R Hydrogasification Process</u>

a) It is recommended that the $H_2$ to coal ratio in the hydrogasifier be reduced to an optimum minimum. This will reduce the size of the process units which are gas flow limited downstream of the gasifier and in the $H_2$ recycle loop. It may also reduce the $H_2$ production to the extent that the $H_2$/coal ratio is reflected in $H_2$ losses. It should also reduce the overall utility requirements.

b) Since the production of the coproduct benzene appears to have a beneficial economic effect, it is recommended that benzene be increased to an optimum maximum.

c) The overall efficiency and feasibility of the CS/R Hydrogasification process to produce SNG will depend heavily on the process selected or developed for converting char to hydrogen. This secondary gasification process is regarded to be as important as the primary hydrogasification process and an assessment of the hydrogasification alone is incomplete for the production of SNG.

## 4.0 FLASH PYROLYSIS - A GENERAL COMMENTARY

Flash pyrolysis may be defined as rapid heating of pulverized coal such that devolatilization occurs in the range of milliseconds to a second. It is also termed short residence time, or SRT, gasification here to highlight the fact that all of the reactants experience the gasification conditions from milliseconds to several seconds.

For the advanced gasification processes assessed, the AVCO HTG, Bell Single-Stage HMF and the CS/R Hydrogasification are also termed flash pyrolysis reactors with the CS/R process more accurately termed flash hydropyrolysis. In addition to the development work being done on these processes, much research work is being done on flash pyrolysis and hydropyrolysis by others in order to better understand the complex chemistry and kinetics involved (see Sections II and III for a more detailed discussion of flash pyrolysis hypotheses for the AVCO and Bell processes). It is appropriate, also, that the basic research continue in parallel with the process development of the three SRT processes so that insights gained relative to the kinetics and chemistry can ultimately effect a more optimized process and a speedier development to commercialization. For example, while a pilot unit is operating to demonstrate long term runs and stability, basic research could be doing parametric studies to determine optimum yield conditions.

These three SRT processes all have similar aspects which make them attractive candidates for coal gasification as follows:

1. <u>Small Reactor Size</u>

The small reactor size is best typified by comparing calculated throughput in terms of pound per hour of coal per internal $ft^3$ reactor volume

for the SRT gasifiers and other gasifiers as follows:

| | lb coal/hr/ft$^3$ |
|---|---|
| SRT-AVCO | 14,000 |
| SRT-Bell | 2,800 |
| SRT-Rockwell | 50-2,000 |
| 2nd Gen. Modern Koppers-Totzek (3) | 34 |
| 2nd Gen Texaco Montebello (3) | 300 |
| Lurgi (dry bed) (2) | 30 |

Hence the installed cost of SRT reactors will be significantly cheaper than more developed gasifiers due to the following:

a) Less metal and refractory required,
b) Smaller reactors can be factory assembled and tested, and
c) Spare reactors or duplication costs are minimized.

2. Handling of Caking Coals Without Problems

The coal is injected at relatively low temperatures and well dispersed in the reactor before temperatures are reached which could cause softening and agglomeration. The coal injectors, which are developed from rocket combustor technology for the CS/R Hydrogasification and Bell HMF Processes, efficiently mix the caking coal with reactant gas in such a way to avoid agglomeration.

3. Selectivity of Devolatilization Products

The SRT gasifiers combine high temperature and short residence time features that can affect selectivity to valuable products, such as BTX. The high temperatures ensure rapid and almost instantaneous devolatilization. Heavy tars and oils, which are undesirable devolatilization by-products, are essentially hydrocracked to extinction very quickly. By limiting the residence time, however, the BTX fraction formed from the pyrolysis or hydropyrolysis reaction may be recovered by quenching before it is reacted further to form other less valuable products. A calculation of equilibrium composition indicates that the BTX fraction, which is a valuable by-product of the CS/R Rockwell Hydrogasification process, would not exist. This same feature of

non-equilibrium selectivity could also be utilized for higher methane yields. Methane formed in flash pyrolysis and hydropyrolysis, especialy for the Bell Single-Stage HMF and AVCO HTG processes, would tend to decompose at the high temperatures. By optimizing the temperature and residence time combination, methane decomposition could be minimized.

While the SRT gasifiers offer the above noteworthy features, other aspects need to be addressed and resolved before the SRT can be commercialized. For example, where oxygen is used, sophisticated, quick-response control systems will have to be developed to prevent temperature excursions, equipment damage, and potential explosions. Also the scale-up of the SRT gasifier system could prove more difficult than for larger gasifiers. For example, scale-up of the Bell and CS/R gasifiers is expected to be done by clustering of many injector modules into the same gasifier vessel. This is similar to the clustering of propellant-oxidant injectors in rocket combustors. While the scale-up of the gasifier itself is not expected to be difficult, the feed splitting and flow control of coal solids in many different lines, plus the additional gasifier control problems associated with having a multitude of feed lines, could prove to be significant in delaying the development of the processes.

## 5.0 REFERENCES


(1) Patel, N. K., Roszkowski, R. T. and White, G. A., "A Screening Evaluation of Rapid Devolatilization Processes," performed by the Ralph M. Parsons Company for GRI, August 1978.

(2) Morel, W. C., "An Economic Comparison of the Bell HMF Gasifier with the Texaco and Lurgi Gasifiers," Report No. 79-1, Morgantown Process Evaluation Office, November 1978.

(3) Bissett, L. A., "An Engineering Assessment of Entrainment Gasification," published by the U. S. Department of Energy, MERC/RI-78/2, April 1978.

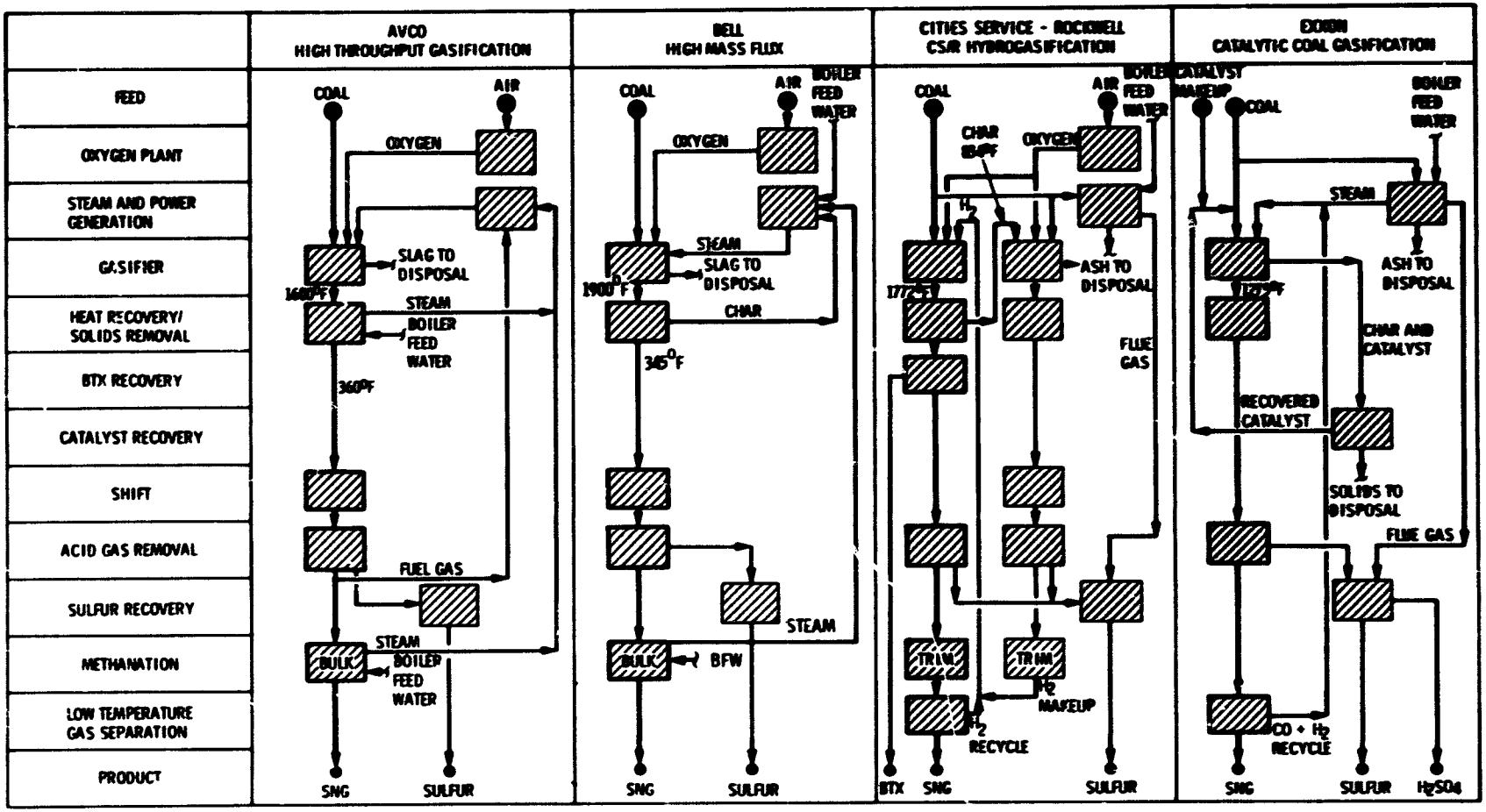


FIGURE I-1. Advanced Coal Gasification Processes - Conceptual Commercial Plant Overall Key Block Comparison.

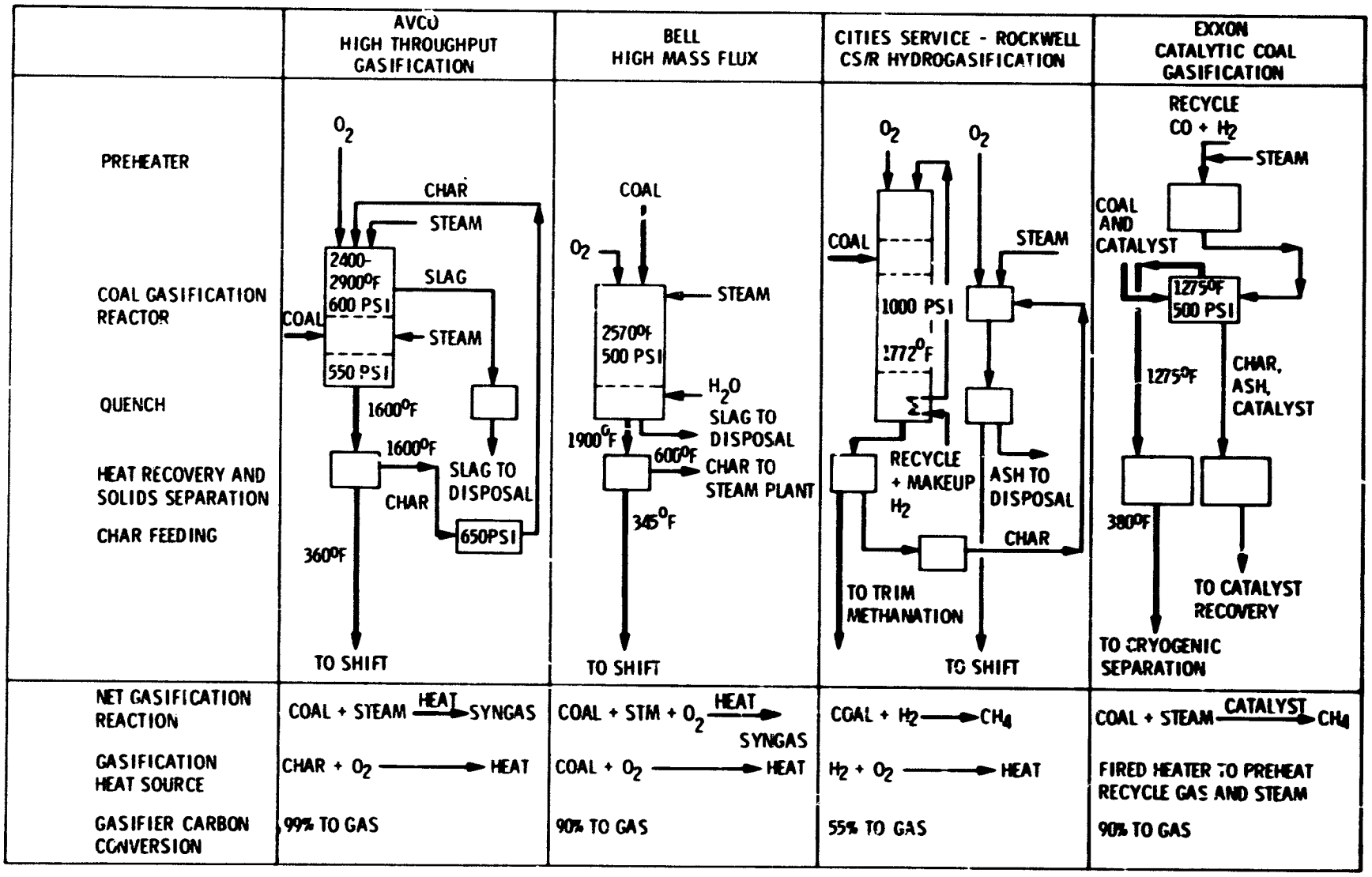


FIGURE I-2. Coal Gasification Reactors - Schematic Comparison.

| | % C TO $CH_4$ IN GASIFIER | OVERALL THERMAL EFFICIENCY | GASIFIER RESIDENCE TIME | LIQUIDS & TARS | COAL FEED SYSTEM | CATALYST | RELATIVE COMPLEXITY TOTAL PROCESS | |
|---|---|---|---|---|---|---|---|---|
| | | | | | | | SOLIDS | GAS/LIQ |
| LURGI (DRY BED) | 15 | 55 | MINUTES | TARS + | L.H. + DILUTT. PH. | NONE | MED | HIGH |
| TEXACO | 0.5 | N/A | SECONDS | NONE | WATER SLURRY | NONE | LOW | MED |
| AVCO HTG | 11 | 68 | 0.03 SEC (PYR.) | NONE | L.H.+ DENSE PH. | NONE | HIGH | MED |
| BELL HMF | 0.02 | 59 | 0.5 SEC | NONE | L.H.+ DENSE PH. | NONE | HIGH | MED |
| ROCKWELL CS/R | 45 | 58 | 1-3 SEC | BTX ($C_6H_6$) | L.H.+ DENSE PH. | NONE | HIGH | HIGH |
| EXXON CCG | 51 | 61 | 10 - 12 HR | NONE | L.H.+ DENSE PH. | $K_2CO_3$ | HIGH | LOW |

TABLE I-1. Comparative Features of Gasifier Processes.

TABLE I-2. Summary of Major Process Units

| | AVCO HTG | BELL HMF | CS/R Hydrogasification Hydrogas. | CS/R Hydrogasification Oxygas. | EXXON CCG |
|---|---|---|---|---|---|
| o Oxygen Plant | X | X | X | | - |
| o Steam/Power Generation | X | X | X | | X (steam only; power imported) |
| o Catalyst Impregnation | - | - | - | - | X |
| o Gasifier | X | X | X | X | X |
| o Heat Recovery/ Solid Separation | X | X | X | X | X |
| o BTX Recovery | - | - | X | - | - |
| o Catalyst Recovery | - | - | - | - | X |
| o Shift | X | X | - | X | - |
| o Acid Gas Removal | X | X | X | X | X |
| o Sulfur Recovery | X | X | - | X | X |
| o Methanation | X (Bulk) | X (Bulk) | X (Trim) | X (Trim) | |
| o Cryogenic Gas Separation | - | - | X | - | X |

TABLE I-3. Summary of Gasifiers' Comparison

| | AVCO HTG | BELL SINGLE-STAGE HMF | CS/R Hydrogas. | EXXON CCG |
|---|---|---|---|---|
| Type | SRT(1) | SRT | SRT | Fluid Bed |
| Coal Feed | | | | Catalyst Impregnated |
| Reaction Heat Source | Char + $O_2$ | Coal + $O_2$ | $H_2$ + $O_2$ | (2) |
| Reaction Conditions °F/PSI | 1600-2900/600 | 2570/500 | 1771/1[illegible]00 | 1275/500 |
| Gasifier Waste | Slag | Slag | Ash | Char/Ash |
| Gasifier Char Utilization | Recycled to Combustor | To Steam Generation | To Oxygasifier | - |
| Quench to Control Reaction | Yes | Yes | Yes | No |
| Net Gasification | Coal + Steam | Coal + Steam | Coal + $H_2$ | Coal + Steam |
| Net Product | Syngas | Syngas | $CH_4$ | $CH_4$ |
| Carbon Conversion to gas, % | 48 (Pyrolysis) 99 (Pyrolysis + Combustor | 90 | 55 | 90 |

| KEY SIMILARITIES AND DIFFERENCES | AVCO HTG | BELL, SINGLE-STAGE HMF | CS/R HYDRO-GASIFICATION | EXXON CCG |
|---|---|---|---|---|
| GASIFIER – | | | | |
| CATALYST | NO | NO | NO | YES |
| FLUID BED | NO | NO | NO | YES |
| SRT | YES | YES | YES | NO |
| ROCKET-ENGINE TYPE | NO | YES | YES | NO |
| SYNGAS PRODUCER | YES | YES | NO | NO |
| $CH_4$ PRODUCER | NO | NO | YES | YES |
| SLAGGING | YES | YES | NO | NO |
| COAL & STEAM, NET REACTANTS | YES | YES | NO (COAL + $H_2$) | YES |
| C + $O_2$, HEAT SOURCE | YES | YES | NO ($O_2$ + $H_2$) | NO |
| QUENCH TO CONTROL REACTION | YES | YES | YES | NO |
| CARBON CONVERSION, % | 48 | 90 | 55 | 90 |
| CHAR USAGE | RECYCLED | STEAM GENERATION | $H_2$ GENERATION | DISPOSED |
| OPERATING, PSIG | 550 | 500 | 1000 | 500 |
| °F | 2000 (AVG) | 2570 | 1772 | 1275 |
| OXYGEN PLANT | YES | YES | YES | NO |
| STEAM/POWER GENERATION | YES | YES | YES | YES (STEAM ONLY) |
| BTX RECOVERY | NO | NO | YES | NO |
| CATALYST RECOVERY | NO | NO | NO | YES |
| SHIFT | YES | YES | YES (OXYGEN) | NO |
| METHANATION | YES | YES | YES (TRIM, | NO |
| CRYOGENIC GAS SEPARATION | NO | NO | YES | YES |

TABLE I-4. Key Similarities and Differences.

# SECTION II
# AVCO HTG PROCESS

## SECTION II

## ASSESSMENT OF AVCO HTG PROCESS

### 1.0 SUMMARY

The AVCO HTG process as presented in this section is the result of a conceptual application of laboratory scale coal pyrolysis data to a commercial size plant to produce pipeline SNG. The conceptual process design of the coal to SNG plant was extracted from a study performed by the R.M. Parsons Co., for the Gas Research Institute. Other data on the AVCO HTG process in this section are the results of meetings and discussions with AVCO and literature surveying. Details of the conceptual reactor design and configuration were discussed but are not reported here since they are considered proprietary at this time.

The AVCO HTG reactor is a two-stage entrained flow gasifier employing a rapid pyrolysis stage and a char combustor stage. Pulverized coal and steam are fed to the pyrolysis stage, and char, oxygen and steam to the combustor stage.

The HTG reactor should be considered in an early stage of development especially in regards to coupling the pyrolysis and combustor stages as this has never been done.

The AVCO HTG has the following noteworthy features:

<u>ADVANTAGES</u>

- Extremely high pyrolysis-stage throughput rates (14,000 lb/hr of coal per $ft^3$ reactor)
- High overall coal to SNG thermal efficiency (68%)
- Protective slagging wall in the combustor stage
- Can handle caking coals

## DISADVANTAGES

- Low coal-to-methane conversion (11%)
- High steam requirement (1.62 lbs steam per lb MAF coal)
- Moderately high oxygen requirement (0.64 lbs $O_2$ per lb MAF coal)

A comparison of the AVCO and the Bi-Gas two-stage coal gasifiers showed AVCO to be significantly lower in methane yield while higher in steam and oxygen consumption. Hence, a potential improvement in the AVCO process is suggested by adopting higher pressures and slightly longer gas residence times, approaching that in the Bi-Gas process. These measures should allow the same degree of conversion at lower oxygen and steam consumption.

## 2.0 CURRENT STATUS OF DEVELOPMENT

Work on the AVCO HTG Gasifier began in 1974 for ERDA in the Low Btu Gas Program. Initial testing for coal gasification was done in an entrained flow gasifier with coal feed rates of up to 120 lbs/hr. Pittsburgh Seam Coal was devolatilized by injecting it into a hot stream of combustion gases formed from the burning of No. 2 fuel oil with oxygen enriched air. Over 30 data points collected indicated thermal devolatilization in the range of 35 to 68% of the original DAF coal carbon into low Btu gas was possible with a typical residence time of 50 msecs. However, it was recognized that without adequate mixing with a background gas (e.g., steam and $CO_2$) during devolatilization, considerable soot was formed from the unstable volatiles.

From 1975 thru 1979, AVCO continued investigating devolatilization yields in a Single-Pulse Gasifier apparatus under the sponsorship of AGA and GRI. The experimental apparatus was used to simulate the HTG conditions by flowing a pulse of coal into a preignited stream of $H_2$ and $O_2$. The important observations from these experiments are:

1. Carbon conversion increases as the temperature of the preignited mixture increases;

2. increasing the turbulence during pyrolysis has a dramatic effect on the carbon conversion with a more pronounced effect at lower temperatures;

3. carbon conversion at a given temperature seems to be independent of whether pyrolysis is in the presence of $N_2$ or $CO_2$.

In pyrolysis PDU work sponsored by AVCO, a reactor which had been originally developed for research in coal combustion for an MHD program, was used as a horizontal flow, entrained bed HTG. Hot gases are produced by the combustion of No. 2 fuel oil with oxygen enriched air; coal is injected into the hot gases at a rate of 1 TPH. The reactor is operated at 4 atm and has a run duration limit of about 1 hour. Typical gas residence time is about 2 msec. Early tests results have shown volatile yields comparable to that obtained with the Single-Pulse Gasifier.

As of yet, the HTG has not operated with the combustion gases being supplied by the combustion of char. Hence, actual operation of the AVCO HTG, which is a two-stage process, has not been demonstrated. However, operation of the combustor with coal and oxygen has been demonstrated in previous (MHD) programs. Operation with char and oxygen is assumed to be very similar.

MHD technology which AVCO has applied to the conceptual design of the HTG includes:

- slag utilization to form a protective slag layer on the reactor internal wall from MHD channel slagging work.
- char combustor from previous MHD coal combustor work.

Details of a conceptual design of the two-stage HTG reactor made by AVCO are not presented in this report as they are considered proprietary at this time.

Further details of the development status are at the end of this section.

## 3.0 PROCESS DESCRIPTION

The following describes the overall conceptual process plant of the AVCO High Throughput Gasifier Process producing SNG from coal by sections in accordance with the Process Block Flow Diagram, Fig. II-1 and the Material Balance, Table II-1. This preliminary process design is extracted from an evaluation study performed by the R.M. Parsons Company under GRI Contract No. 5010-322-0048.

### 3.1 Coal Preparation and Feeding

The coal used for the material balance is a Pittsburgh Seam No. 8 coal with the following properties:

| Proximate Analysis, as-received, | Wt. % |
|---|---|
| Moisture | 6.0 |
| Volatile Matter | 31.9 |
| Fixed Carbon | 51.5 |
| Ash | 10.6 |
| | 100.0 |

| Ultimate Analysis (dry) | Wt. % |
|---|---|
| C | 71.50 |
| H | 5.02 |
| N | 1.23 |
| O | 6.53 |
| S | 4.42 |
| Ash | 11.30 |
| | 100.00 |

| | |
|---|---|
| Heating Value of Dry Coal | |
| Btu/lb (HHV) | 13,190 |
| Heating Value of Coal As-Received | |
| Btu/lb (HHV) | 12,400 |

Raw coal received from stockpile is crushed to 70 percent minus 200 mesh and dried to 2 weight percent moisture in the coal preparation section.

The prepared coal is fed to a lockhopper system. A portion of the raw product gas from the Heat Recovery section is used in the lockhopper recycle system for pressurizing the lockhoppers and feeding the coal to the pyrolyzer.

## 3.2 Gasification

### 3.2.1 Stage I - Char Combustor

The recycled char, oxygen, and steam are injected into the combustor through nozzles located near the top of the vertical down flow combustor. The char-oxygen mixture is fed through the center port of the injector, while the steam passes through the outer annulus.

Oxygen and steam are regulated to the combustor for total combustion of the residue carbon. The combustor effluent gas having a temperature of 2400°F and pressure of 600 psia flows directly into the pyrolyzer as the only heat source for coal gasification in the pyrolyzer.

The coal minerals form a molten slag on the combustor inner wall surface which is continuously replenished. The slag coating serves as the protective refractory for the combustor. Excess slag is trapped out at the bottom of the combustor and quenched in a water bath attached at the bottom of the combustor. The shattered slag separated from the quench water is delivered to battery limits for disposal.

### 3.2.2 Stage II - Coal Pyrolyzer

Pulverized coal and steam are injected radially into the horizontal flow entrained bed pyrolyzer which contains high temperature gas from the close-coupled char combustor. Thermal devolatilization of coal and homogeneous gas phase reaction are accomplished by effective mixing of the feed coal, the hot gas, and the injected steam. At 550 psia and a reactor outlet temperature of about 1600°F, 48 weight percent of the coal carbon is gasified.

### 3.3 Char Separation

The pyrolyzer effluent gas is routed to a dry cyclone separation system where the char together with coal-ash is separated from the gas. The cyclone off gas is routed to a heat recovery system. The solids, containing char and ash, are recycled to the combuster via a char feeding system.

### 3.4 Char Feeding

The char feeding system consists of lockhoppers similar to the coal feed hoppers. The hot char is pressurized to about 650 psia in the hoppers and fed to the combustor in a dense phase flow condition. The carrier gas is the same gas used in the coal feed lockhoppers.

### 3.5 Heat Recovery

The gas from the cyclone proceeds to a heat recovery system. The sensible heat of the gas is recovered in heat exchangers to generate 1500 psig steam and to preheat boiler feed water. The cooled gas is then scrubbed with the process condensate from downstream of the shift converter to remove the solid fines which are not removed by the cyclones. These fines are dried and then recycled to the char combustor.

### 3.6 Shift

The solid free gas is delivered to the shift converter after being reheated to about 600°F by back exchanging with the shift converter effluent gas.

### 3.7 Acid Gas Removal

The shifted gas is cooled to approximately 140°F, condensate separated, and the gas fed to the Acid Gas Removal section. Sulfur-containing gases and $CO_2$ are selectively removed from the gas in a physical solvent absorption system such as the Selexol process.

Approximately eight percent of the desulfurized syngas is taken for plant fuel and for supplementing the fuel required for superheating steam. The balance of the syngas is reheated to 700°F and passed over cobalt moly catalyst

and zinc oxide to remove the trace sulfur compounds in the gas. The syngas is then routed to the catalytic methanation section.

### 3.8 Methanation

A high temperature methanation system such as the RM Process® (1) is employed here to recover maximum quantity of heat released in the methanation system for production of 1500 psig steam. Thirty percent of the gas from the zinc oxide reactor is fed to the first of the five bulk methanation reactors. A small quantity of steam is added to moderate the temperature rise across the catalyst bed in the first reactor. The remaining seventy percent of the fresh feed is fed to the second methanator. The effluent gas streams from the first and the second reactors are combined and fed to the remaining three methanators connected in series. Through this bulk methanation system, the process gas temperature is progressively lowered by heat recovery in the exchangers placed between the reactors. After the final methanation, the gas is cooled to condense the steam.

### 3.9 Drying and Compression

The gas stream from the bulk methanation system is then compressed to the desired product pressure and passed through the trim methanator for production of specification SNG. The dehydration of the product SNG is effected by a glycol dehydration unit.

### 3.10 Sour Water Stripping

The sour condensate collected downstream of the shift converter is routed to a sour water stripper. The stripped condensate supplemented with condensate recovered in the methanation system is routed to the plant water system for treating and reuse.

### 3.11 Sulfur Recovery

The sulfur-containing gases from the Acid Gas Removal section and from the Sour Water Stripping section are delivered to the Sulfur Recovery section. The latter includes a Claus sulfur plant and a tail gas treating plant for producing elemental sulfur as a by-product.

### 3.12 Water Treating, Steam Superheating, and Power Generation

This unit consists of water treating for BFW preparation, steam superheating, and power generation as required for the entire plant.

### 3.13 Oxygen Plant

The oxygen plant consists of commercially available air separation units delivering oxygen at 600 psia to the char combustor.

## 4.0 STRENGTHS AND WEAKNESSES

### 4.1 Strengths

- Effective utilization of oxygen. An advantage of the AVCO HTG two-stage concept is that valuable oxygen is used to combust and burn out the more difficult to react char in the STAGE I combustor. The high temperature combustion gas is then used to supply the heat required for the thermal pyrolysis of coal in the STAGE II pyrolyzer. The steam injected to the STAGE II pyrolyzer is used for homogeneous gas phase stabilization reactions; no steam-coal/char heterogeneous reaction is claimed to occur in the pyrolyzer.

- High throughput rate; short residence time. AVCO estimates that the pyrolysis reactor can be operated at a coal feed rate of 14,000 lbs/hr per $ft^3$ of reactor volume at the prescribed process conditions. This corresponds to a residence time of 40 milliseconds.

- Slagging wall combustor. Since the temperature in the char combustor can be in excess of 3000°F, the coal ash is converted into molten slag. A continuously replenishable steady state slag coating which is formed on the wall structure serves as a protective refractory material.

- High carbon utilization. The coupled combustor-pyrolyzer gasifier is potentially capable of operating at nearly 100% carbon utilization. Coal ash is the only solid effluent stream produced in the plant.

- o High thermal efficiency. 68.4% of the thermal energy input in the coal feed is converted to the SNG product (cold gas efficiency).

- o Clean process. Ammonia and tar/oil liquid hydrocarbons may be produced only in a negligible quantity. No extensive liquid effluent treatment is required in the process.

- o No utility coal requirement. Sufficient high pressure steam (1500 psig) can be generated with the process heat recovered in the heat exchangers and by utilization of a high temperature methanation unit. No coal-fired steam boiler is required to supplement the plant steam requirement.

- o Self-sufficient plant fuel requirement. A small slip stream of desulfurized product syngas (prior to methanation) is used to supply the plant fuel gas requirement. No additional flue gas desulfurization is required.

- o Dense phase feeding. Both the process coal and the residual char are fed as dry solids in dense phase mode; hence, less volume of carrier gas and smaller transfer lines are expected.

- o Flexible application. The gasifier produces $H_2$, CO, $CO_2$ and a lesser quantity of $CH_4$. With selected downstream processing, the gasifier can be used for generating low Btu gas, medium Btu gas, synthesis gas, or high Btu gas. Also, caking coals are acceptable feeds to the HTG.

## 4.2 Weaknesses

- o Low coal-to-methane conversion. Experiments indicated a typical pyrolyzer effluent gas contains about 6.5 volume percent of methane on a dry basis, representing a carbon conversion to $CH_4$ of only about 10-15%. In the conceptual process shown in Figure II-1, only about 30% of the total SNG is produced in the HTG reactor.

- **Weak data base.** The conceptual process design is based on the information extracted from laboratory experimental data. Most of the research work was performed on a batch process explosion chamber reactor. No data from a continuous steady-state run are yet available at this time. Further development work is mandatory to substantiate the preliminary data used for the conceptual design.

- **High material consumption.** A comparison on the feeds per MM Btu of product SNG is tabulated below. The BCR Bi-Gas process is very similar functionally to the AVCO HTG; the major difference is that the AVCO HTG has much higher reactor throughput.

| | AVCO HTG | BCR BI-GAS[2] |
|---|---|---|
| Lbs $O_2$ | 62.98 | 43.04 |
| Lbs process steam | 159.18 | 82.64 |
| Lbs DAF coal | | |
| Process | 98.35 | 85.88 |
| Utility | - | 13.02 |
| Total | 320.51 | 224.58 |
| (lbs. per MM Btu SNG) | | |

- **Critical components need further development work:** The following areas need significantly more development work:

  - hot char recyle including char recovery, repressurizing, and dense phase flow to the combustor

  - heat recovery from the high temperature syngas and entrained solids to generate high pressure steam

  - control scheme to keep close control on the flow of two solids streams, coal and hot char, which if either were interrupted, would shut the gasifier down.

## 5.0 POTENTIAL IMPROVEMENTS

The following items are being suggested as potential solutions to problem areas that appear to exist as the process is now proposed by the developer. These also take into account the stage of development of the overall process and the conceptual status of many of the companion operations to and around the proposed gasification step. They are the result of reviewing items mentioned in other sections such as weaknesses, alternates, disadvantages and status of development. It is not suggested that these are the final solutions. They are potentials only, viewed from the perspective of this assessment, and will require more detailed investigation and evaluation prior to testing. It is for this reason that they are called potential improvements.

### 5.1 Oxygen/Steam Utilization

The two-stage HTG concept proposed by AVCO is to use the valuable oxygen to combust and burn the less reactive char in the combustor stage and to use steam + $CO_2$ to stabilize and react with the more reactive volatiles evolved from coal in the pyrolyzer stage. This is contrasted with a single-stage gasifier, e.g., the Texaco gasifier, where the valuable oxygen is consumed by heterogeneously reacting with the char and by reaction with the volatiles.

However, a comparison of the steam and oxygen consumption of the AVCO two-stage gasifier to that of the Bi-Gas two-stage gasifier[2] shows 46% higher oxygen and 93% higher steam usage per MMBtu of SNG final product. Also, the coal carbon converted to $CH_4$ in the AVCO two-stage gasifier is much lower: 11% versus 24% for Bi-Gas.

It is suggested that AVCO investigate in their PDU the following:

(a) higher pressures, approaching 1000 psia

(b) higher pyrolysis residence times, in the order of several seconds

(c) lower pyrolyzer outlet temperatures

The purpose of suggesting the above is to maximize the $CH_4$ yields in the gasifier by allowing the gas phase and heterogeneous reactions to produce more methane. The objective would be to reduce the oxygen and steam consumption to that of the Bi-Gas system while simultaneously increasing the $CH_4$ yield. It is realized that the yields of the Bi-Gas reactor as given in the Braun report (reference 2) are probably optimistic. For example, the carbon conversion to $CH_4$ in that report is calculated to be 24%. However, previous experimental data by Bituminous Coal Research, Inc., on a Pittsburgh Seam coal showed conversions from 12 to 20%;[3] with N. Dakota Lignite, conversions from 11 to 17% were achieved[4]. Conditions of the testing were similar to AVCO except the pressure was about 1000 psia and the residence times ranged from 2 to 16 sec. Hence, although a yield of coal carbon to methane of 24% seems optimistic, higher conversion than AVCO has realized are entirely possible by pressure and residence time adjustments.

## 5.2 Synthesis Gas Production

The AVCO HTG pyrolyzer produces a significant, but relatively small amount of methane: only 11 percent of the coal carbon is converted to $CH_4$. When producing SNG, or a fuel gas to be used for combustion, the methane yield should be maximized. However, where a syngas is to be used for hydrogen production, Fischer-Tropsch synthesis, methanol synthesis, etc., the production of methane should be minimized so that costly separation of the $CH_4$, e.g., by cryogenic separation, can be eliminated. It is suggested that AVCO investigate in their PDU the conditions required to give essentially no methane. Higher pyrolyzer temperatures and lower steam usage are methods which should reduce the methane yield.

## 5.3 Combined Gas and Power Production

To capitalize on AVCO's knowledge of coal pyrolysis and MHD power generation, it is suggested that they further investigate the integration of the combustor, channel, and pyrolyzer. This arrangement has the advantage of producing gas as well as power which could be used for plant requirements. The added complexity is seed injection and separation as required in an MHD power cycle.

## 6.0 COMPONENTS REQUIRING DEVELOPMENT

### 6.1 Dense Phase Feed System

In the proposed HTG gasification process, two dense phase feed systems are required; one for coal feeding and one for char feeding. At the present stage of development, the actual feed system has not yet been selected by the developer. Pressurized lockhopper systems must be used. The developer is considering to use raw product gas as the lock gas. A gas recovery and recycle system would be necessary to minimize the valuable gas venting to atmosphere.

AVCO has experience with dense phase coal transport and feeding up to 2 hours duration. A continuous feeding system for a longer time scale has yet to be demonstrated.

The coal/char is injected at a point of high Reynolds number and near sonic velocity in the main stream in a manner that encourages fast turbulent mixing of the solids and main stream. The injection of a coal stream into a main stream of near sonic velocity, yet maintaining optimum turbulent mixing, may present difficult fluid mechanic problems.

### 6.2 Char Combustor

The design of a char combustor to operate in series with the pyrolyzer would also be designed on the concept of high temperature rapid gasification. The slagging wall combustor concept is based on related work performed by AVCO in their coal-fired MHD program. However, the properties of the char are undoubtedly different from the properties of the coal. Mechanical features, combustion stoichiometry, effects of ash composition and concentration, and gas molten-slag separation require special attention in the development of the char combustor.

### 6.3 Reactor Turn Down

The reactor turn down capability of the proposed HTG system has not yet been studied. The turn down ratio is an important parameter to the application of slagging reactor wall structure technology and to the process engineering of the process.

Establishing and maintaining a continuous steady flowing layer of molten slag on the reactor wall is controlled by the shear and body forces on the slag and the slag viscosity, which is dependent on temperature. Limits of these controlling factors and the effect of changing the gas solids stream flow pattern may require further study.

From a process engineering point of view, a piece of equipment which has limited turn down ratio can be the bottle-neck of the entire process. Costly plant shut down could be caused by not allowing for an adequate reactor turn down ratio in the process design.

### 6.4 Control and Safety Systems

At the present stage of development, the control/instrumentation and safety systems for a two-stage HTG reactor have not been developed on any scale. The following items represent some major points which require special attention:

- a reliable, high-sensitivity flow control system for solids.
- a safety control system which can prevent the possibility of an oxygen explosion caused by upset conditions such as loss of char feed, loss of coal feed, loss of steam, etc.
- a suitable instrumentation system which can adequately control this very short residence time gasifier.

## 7.0 DEVELOPMENT STATUS DETAILS

AVCO's experience in MHD development entailed new studies of coal and gas behavior at high temperature and related technologies. Basic and applied research on coal utilization led to a conceptual two-stage gasifier system: Stage I is a char combustor and Stage II is a coal pyrolyzer. The proposed two-stage gasifier has not yet been fully tested in the laboratory. Details of the conceptual design are considered proprietary at this time. Most of the pyrolysis data gathered are from single-pulse gasifier experiments. The

technological information and development status of the related components which have been tested or are under testing are given as follows:

(1) Pyrolysis Work

- o Entrained Flow Gasifier Experimentation
- o Single-Pulse Gasifier (batch) Experimentation
- o Pyrolysis PDU (high velocity) Experimentation

(2) Slag Utilization

(3) MHD Coal Combustor Work

(4) Analytical Modeling Work

(5) Future HTG Gasifier PDU Development

## 7.1 Pyrolysis Work

### 7.1.1 Entrained Flow Gasifier Experimentation

- o Funding Agency: ERDA - Low Btu Gas Program
- o Project Period: 1974-1975
- o Project Objectives:

  Exploration of the rate and extent of coal devolatilization using the MHD combustor overhead gas as the heat source.

- o Test Facility:

The entrained bed gasifier experiment set-up is shown in Fig. II-2. The system consisted of a vertical down-flow gasifier with top mounted oil burner and auxiliary equipment with coal feed rates of up to 120 lb/hr.

o Test Conditions:

Coal (70%-200 mesh) was fed through three radially-aligned injectors at a rate of 50 to 120 lbs/hr. The coal particles were heated up rapidly and devolatilized as they got entrained in the hot gases produced by combustion of No. 2 fuel oil with oxygen-enriched air.

The volatiles and char were intermixed and reacted with the hot gases as the stream flows downwards. All the reactions were quenched by cold water jets at the bottom of the gasifier. Char particles were collected in the char collector for char analysis. Gas samples sucked through the sampling probe were analyzed by on-line IR detector or by gas chromatography.

The gasifier was operated at atmospheric pressure. Gas temperature (without coal) was measured in a range of 2780° to 3590°F. Coal-gas mixture residence time was set in a range of 7 to 70 milliseconds.

o Test Results:

Over 30 data points indicated thermal devolatilization in the range of 35 to 68% of the original DAF coal carbon into low Btu gas with a typical residence time in the order of 50 msecs.

It was also acknowledged that inadequate mixing of volatiles and background gas during devolatilization caused significant soot formation.

### 7.1.2 Single-Pulse Gasifier Experimentation

- Funding Agencies: AGA/GRI

- Project Period: 1975-1979

- Project Objectives:

  Investigation on volatile yields of pulverized coal under extreme conditions of initial coal-gas mixing, temperature and heating rate.

- Test Facility:

  The experimental apparatus is shown in Fig. II-3. The batch process explosion chamber is made of an aluminum cylinder (25 cm ID x 24 cm) with steel end plates. Piezoelectric pressure transducers, one on each end flange, were used to measure the very rapid pressure change.

  A coal holder with perforated bottom plate was mounted in the chamber bottom flange. A pressurized gas reservoir was isolated from the explosion chamber by a quick acting ball valve.

- Test Conditions:

  Before each run, coal was placed in the coal holder and the chamber was evacuated. Depending on the experiment, $O_2$, $O_2 + CO_2$, or $O_2 + N_2$ was then loaded in the chamber to about 1 atmosphere. Coal was blown into turbulent suspension by $H_2$ gas from the reservoir.

  Rapid gas phase combustion by spark ignition of stoichiometric hydrogen-oxygen mixture resulted in a superheated steam environment.

  The combustion was followed by heating of the coal particles by the newly formed steam, devolatilization, and the reaction of volatiles with the background gas.

At the end of each run, the product was cooled by heat transfer to the walls of the chamber.

Evaluation of the experiment was based on examination of the gas and char which remained at the end of the run.

o Test Results:

The stabilized gas composition varies with experiment. Typical gas yields on a dry basis consists of $H_2$, 45.1%, CO, 29.0%, $CO_2$, 19.4%, $CH_4$, 6.5%. The experimental results were summarized in four groups and are given as follows.

(a) Steam as background gas

Parameter investigated:
coal mass loading

| Post Explosion* | |
|---|---|
| T, °F | P, Atm |
| 5800 | N/A |

EXPERIMENTAL RESULTS:

| Mass Loading lb. DAF Coal/ lb. Steam Generated | Number of Data Points | Gas Yield % Carbon Convers. |
|---|---|---|
| 0.3 | 1 | 80 |
| 0.6 | 2 | 70,85 |
| 0.8 | 3 | 60,61,65 |
| 1.2 | 1 | 50 |
| 1.6 | 1 | 42 |
| 2.0 | 1 | 38 |
| 2.1 | 1 | 35 |
| 2.5 | 1 | 32 |
| 5.5 | 1 | 18 |
| 9.2 | 1 | 10 |

As is evident from the above data, the % carbon conversion decreased as the coal/steam ratio increased.

(b) CO, $CO_2$, and steam as background gas (initial gas $CH_{1.84}O_{2.12}$):

Parameter investigated:

different temperature at a constant mass loading of 0.33 DAF coal/total gas.

Experimental Results:

| *Post Explosion T, °F | P, atm | Number of Data Points | Gas Yield % Carbon Convers. | % Carbon[δ] Conversion |
|---|---|---|---|---|
| 4330 | 13.8 | 6 | 20, 21, 25, 30 | 41, 47 |
| 4800 | 15.3 | 4 | 35, 46 | 69, 76 |
| 5350 | 17.3 | 4 | 55, 60 | 64, 74 |

From the above data, two important observations can be made:

(1) As the temperature of the steam produced in the explosion chamber goes up, the carbon conversion increases

(2) Increasing the turbulence has a dramatic effect on the carbon conversion with a more pronounced effect at lower temperatures

(c) $CO_2$ and steam as background gas:

Parameter investigated:

different temperatures achieved by varying the $CO_2$ concentration at a constant mass loading of 0.8 lbs. DAF coal/lb. steam.

*Post Exp. Temp = Calculated adiabatic temperature for $H_2$ and oxygen reactants only before coal is injected.

δ Increased turbulent mixing.

**Experimental Results:**

| $CO_2/O_2$ | T, °F | Number of Data Points | Gas Yield % Carbon Conversion |
|---|---|---|---|
| 0 | 5700 | 2 | 62, 66 |
| 0.5 | 5200 | 2 | 57, 65 |
| 1.0 | 4700 | 2 | 49, 49 |
| 1.5 | 4250 | 2 | 49, 51 |
| 2.2 | 3850 | 2 | 45, 49 |
| 3.0 | 3500 | 2 | 40, 41 |
| 3.5 | 3150 | 2 | 40, 41 |

As shown by the above data, decreasing the temperature by the addition of $CO_2$ as a diluent decreases the % carbon conversion.

(d) $N_2$ and steam as background gas:

Parameter investigated:

different temperature levels achieved by varying the $N_2$ concentration.

**Experimental Results:**

| Mass lb. DAF con. / Lb. steam | $N_2/O_2$ | T, °F P, atm* | Number of Data Points | Gas Yield % Carbon Convers. |
|---|---|---|---|---|
| 0.8 | 0 | 5600 | 5 | 62,66,75 76, 80 |
| | 1 | 5300 | 2 | 60, 70 |
| | 2 | 4750 | 2 | 49, 50 |
| | 3 | 4300 | 2 | 46, 46 |
| | 3.5 | 4100 | 2 | 51, 53 |
| | 4 | 3900 | 2 | 46, 46 |
| | 5 | 3450 | 2 | 51, 51 |
| | 6 | 3100 | 4 | 45, 46 46, 47 |
| | 7 | 2850 | 4 | 44, 45 46, 50 |
| | 8 | 2600 | 2 | 44, 45 |
| | 9 | 2400 | 3 | 45, 45, 45 |

*Pressure in a range of 10 to 20 atms.

As shown by the above data, decreasing the temperature decreases the % carbon conversion similar to what was observed when $CO_2$ was used as the diluent. The interesting observation here is that the $CO_2$ didn't appear to help carbon conversion since the results at total mass loading of 0.8 are similar for $CO_2$ and $N_2$. Hence, heterogeneous reaction of $CO_2$ and char were apparently negligible.

### 7.1.3 Pyrolysis PDU Experimentation

- Funding Agency: AVCO internal funds
- Project Period: Continuing
- Project Objectives:

  Demonstrate thermal pyrolysis of coal in a high velocity entrained bed reactor producing comparable volatile yields with the yields obtained in the batch reactor experiments (Single-Pulse Gasifier).

- Test Facility:

  The reactor, developed originally for research in coal combustion for open cycle MHD, has been operated as a horizontal flow, entrained bed pyrolysis PDU. The reactor has internal dimensions of 15 cm diameter and 180 cm long. Coal feed rate is about 1 TPH.

- Test Conditions:

  Hot gas was produced by combustion of No. 2 fuel oil with oxygen enriched air. Coal was injected into the hot gas at a rate of 1 ton per hour. The reactor was operated at 4 atmospheres. Total run time is limited to about 1 hour which is set by the coal feed hopper capacity. Typical gas residence time is about 2 msec.

o Test Results:

Early test results have shown volatile yields were comparable with the results obtained for the Single-Pulse Gasifier experiments. Results were reported as a composite of test data points.

| Mass Loading (lbs DAF Coal/ lb gas) | Reaction Conditions | | | Gas Yield |
|---|---|---|---|---|
| | T, °F | P, ATM | $N_2/O_2$ | %Carbon Convers. |
| 0.4 | 4300 | 4 | N/A | 65 |
| 0.8 | 4300 | 4 | N/A | 50 |

Recent efforts were directed to the areas which would more nearly represent the elements of the proposed two stage gasification concept.

More experiments were performed in the direction of lowering the reaction temperature. The nitrogen concentration is reduced by replacing $N_2$ with water/steam.

Preliminary findings revealed that the stabilization of pyrolysis products such as CO, $H_2$, and $CH_4$ is sensitive to the composition of the background gas stream and to the placement of the coal injectors. The experiment results are still in the process of analysis; data have not been released yet.

## 7.2 Slag Utilization

o Funding Agency: EPRI

o Project Period: 1975 - 1977

- Project Objectives:

  Investigation on the requirements for development of a continuous, stable layer of slag for structural protection in MHD systems.

- Test Facility:

  The test duct was about 80 cm long, with a fixed height of 6 cm, and adjustable width, entrance and exit geometry to control Mach number distribution. The test structure exposed to the two-phase product flow normally included two or three different ceramic filled test wall structures, bare copper, and nickel-plated copper. Stainless steel 304 was used as end blocks in the supersonic configuration. In some cases, the convergent section between the combustor and MHD channel was made of cold copper (non-slagging) with about 10 cm contraction length; in others controlled contour slagging contraction was used.

- Test Conditions:

  The experiments employed coal slag resulting from injection of either pulverized coal, fly ash, or fly ash plus other minerals, into a fuel oil fired combustor.

  Typical test conditions were summarized as follows:

| | | |
|---|---|---|
| Combustor: | AVCO MK VI | EPRI |
| Primary Feed: | O -N -CH | O -N -CH |
| Mach Number: | 0.6 - 0.7 | 1.1 - 1.6 |
| Residence Time(msec): | 15 | 9 |
| Initial Pressure (psia): | 30 - 35 | 55 - 63 |
| Initial Temperature: | 2800 - 2900 | 2500 - 2600 |
| Replenishment feed: | Penn Rilton Seacoal (Pittsburgh Seam) | Fly ash |

- Test Results:

  Experiments under both subsonic and supersonic conditions indicated that a steady state continuous flow of a slag layer coating on the metal wall structure was achieved in a typical time of 30 minutes. The slag surface temperature was found to be about 2500° to 3000°F and the metal wall temperature as low as 300°F.

  The effects of combustion stoichiometry, ash composition, flow field, and wall structure on the slag coating transport process were studied.

  The technology has been demonstrated by hundreds of hours of long duration runs at AVCO's laboratory.

## 7.3 MHD Coal Combustor Work

- Funding Agency: DOE
- Project Period: 1976 - Present
- Project Objectives:

  Phase 1 - Investigated the burn out and combustion air preheating facility.

  Phase 2 - Designed and built a coal combustor for an MHD system.

  Phase 3 - Test the combustor. MHD channels will be coupled to the combustor.

- Test Facility:

  A coal-fired combustor was designed for a 20 MW MHD system. The combustor is designed to operate with a slagging wall.

- Test Conditions:

  The combustor is operated at about 4800°F and 5 atm with a coal feed rate of 2 tons per hour.

- Test Results:

  Several of 90 minute runs have demonstrated the viability of the slag protected reactor walls and good combustion performance. The reactor design approach is verified.

## 7.4 Analytical Modeling Work

- Pyrolysis and Combustion

| | |
|---|---|
| Input: | Fuel; oxidant; flow description |
| Model: | Mixing and flow dynamics |
| | Heat, mass, momentum exchange |
| | Pyrolysis kinetics |
| | Heterogeneous reaction |
| | Thermochemistry |
| Capability: | Performance prediction |
| | Optimization calculations |
| | Equipment sizing calculations |

- Slag Flow

| | |
|---|---|
| Input: | Gas Flow; wall structure |
| Model: | Heat, mass, momentum transport |
| | Viscosity dependence |
| | Stability |
| Capability: | Slag layer thickness, temperature, flow calculations |
| | Transient flow calculations |
| | Optimum wall structure calculations |
| | Optimum slag tapping calculations |

## 7.5 Future HTG Gasifier PDU Development

Development of the High Throughput Gasification (HTG) PDU is visualized by AVCO in terms of the following milestones:

- Pyrolysis stage coupled with a liquid fueled combustor with oxygen and steam as input. Primary emphasis will be placed on exploring coal injection and particle size for maximum pyrolysis yield. The tests will be done under conditions appropriate to char recycle condition. Fly ash will be added to provide a slag source.

- Char combustor development will be done based on the technology evolved from the coal combustor for open cycle MHD program.

- Development of high temperature cyclones to separate char from the pyrolysis product gas. AVCO expects to capitalize on the experience obtained during the operation of the BCR Bi-Gas plant.

- Development of an integrated system consisting of char combustor, coal pyrolyzer, cyclone separation, and char recycle.

# 8.0 FUNDAMENTALS OF SRT GASIFICATION AS APPLIED TO THE AVCO HTG GASIFIER

The AVCO HTG Process consists of two stages: the pyrolysis stage and the char combustor stage. Although each stage is dependent on the other, the following discussion will treat the stages separately.

## 8.1 Pyrolysis Stage

AVCO has given considerable effort to the basic understanding of rapid pyrolysis in an entrained-flow coal gasifier. By combining data extracted from the literature and from their own pyrolysis experiments, AVCO has postulated a mechanism for rapid coal pyrolysis[5,6].

Pulverized coal (70% minus 200 mesh) is injected into hot combustion gases from the char combustor. The hot gases, which are at temperatures around 3000°F and consist mostly of CO, $CO_2$ $H_2$ and $H_2O$, are injected into the

pyrolyzer stage at high velocities to effect good mixing with the coal (note that the pressure drop of the combustion gases from the combustor to the pyrolyzer effluent is 50 psi). By the combination of high temperature combustion gases, small coal particles and intense mixing, heating rates of up to 200,000°F/sec are attained. This means that the coal particles are heated to pyrolysis reaction temperatures of around 2000°F in about 10 msec.

As the coal is being heated up, pyrolysis reactions occur with CO, $CO_2$ and $H_2O$ being the primary compounds driven off at temperatures up to about 800°F[7]. Subsequent heating produces heavier hydrocarbon gases such as $CH_4$, $C_2$-$C_5$ gases, and aromatics such as benzene and polycyclic compounds. AVCO has postulated the rapid devolatilization reactions by suggesting two competing first-order reactions. Each describes the coal decomposition (approximated by $CH_x$, where $0 < X < 1$) to residual chars $R_1$ and $R_2$ and volatiles, $V_1$ and $V_2$. The reactions then are written as follows:

$$\text{coal} \xrightarrow{K_1} (1-\alpha_1)\ R_1 + {}_1 V_1$$

$$\text{coal} \xrightarrow{K_2} (1-\alpha_2)\ R_2 + {}_2 V_2$$

where $K_1$ = Arrhenius rate constant for reaction 1

$K_2$ = Arrhenius rate constant for reaction 2

$\alpha_{1 \text{ or } 2} = X/X_n$

$X$ = Atomic (H/C) of coal

$X_n$ = Atomic (H/C) of volatiles $V_n$, n=1,2.

From curve fitting of data in the literature, the first reaction was found to dominate at temperatures to about 1800°F and the second reaction at higher temperatures. Calculated activation energies $E_n$ for the Arrhenius rate equation ($k_n = k_o \exp[-E_n/RT]$) were 17.6 and 60.0 kcal/mole respectively. For calculational purposes, the volatiles evolved by the first reaction are assumed to be ethylene type aromatic hydrocarbons while those evolved by the second reaction are assumed to be benzene type aromatic hydrocarbons. However, the conditions of the HTG gasifier in the material balance given in Table II-1

are such that the first reaction predominates due to the relatively low temperatures. Nevertheless, the volatiles yield as a percentage of DAF coal is about 60 wt.%. With this quantity of volatiles evolved, which is about 1-1/2 times the ASTM VM of the coal, the gas-phase cracking of unstable volatiles to $H_2$ and CO will occur. This degasification of volatiles to soot can occur basically in two regions: within the pores of the coal where the volatiles are still escaping or in the dispersed gas after the volatiles are free of the coal surface. It has been determined that about 80-90% of the sooting takes place in the gas phase and hence would be swept away from the coal particle before having a chance to adhere to the coal. Since soot is very fine and difficult to recover, sooting is extremely undesirable. By providing sufficient reactive gas species in the hot combustion gases (CO, $CO_2$ and $H_2O$), the unstable but reactive volatiles are reacted in the gas phase thereby suppressing soot formation. This is termed the "stabilizing" effect of the background gases. Gas composition is assumed to be close to equilibrium with methane yields apparently slightly above equilibrium (an equilibrium calculation of the pyrolyzer effluent gas from Table II-1 showed slightly lower methane than is reported).

The total residence time in the pyrolysis stage is less than 100 msec; therefore, slow heterogeneous reactions between the newly formed char and gas are assumed to be negligible.

8.2 Char Combustor Stage

In this stage, the heterogeneous reaction of char (from coal pyrolysis) with oxygen is essentially the only reaction that converts the char to gas. Some steam is added to the combustor stage as a means of temperature control. Any residual volatiles from the pyrolysis stage will devolatilize and combust with the oxygen also.

Gases formed at these high temperatures ( 3000°F) are assumed to be in equilibrium.

Although this stage is titled the "char combustor stage", it does not combust all of the carbon in the char to $CO_2$, nor is it necessary to do so.

As indicated in stream 6 of the material balance in Table II-1, considerable CO and $H_2$ are produced here. Hence, the "char combustor" is more like a partial oxidizer producing a syngas containing CO, $H_2$, $CO_2$ and no methane.

Figure II-4 is presented here to facilitate a qualitative discussion on the heat load required by the pyrolysis stage and the heat supplied by the combustor stage. Curves presented are the author's concept of the relationship between the two stages in order to point out certain indigenous features of this relationship.

Curve (1) represents the percent of coal that is available to the char combustor as recycle char versus the percent MAF coal devolatilized in the pyrolysis stage. The relationship takes into account that the less devolatilization in the pyrolysis stage, the higher the char availability to the combustor stage. It also recognizes an absolute maximum amount of devolatilization in pyrolysis shown by the asymptote to the dotted line. It should be pointed out that if all of the char HHV is to be utilized in the char combustor, then all of the carbon in the gas phase is converted to $CO_2$. Curve (2) represents the percent of the coal feed HHV required for pyrolysis as a function of the percent MAF coal devolatilized. This curve shows the obvious relationship that the heat load to pyrolysis increases as the volatiles yield increases. The curve also suggests that the heat load for the initial stages of devolatilization is a small quantity of the feed coal HHV, but as the percent devolatilization increases, a sharp increase in the heat requirement occurs. The shaded section labeled "Area A" represents the difference in heat available to the char combustor and the heat required by the coal pyrolyzer. As long as this difference is positive, then some syngas, i.e., CO + $H_2$, is generated in the char combustor along with $CO_2$. As the volatiles yield increases, this difference decreases until it reaches a balance point labeled "char balance point" where only $CO_2$ is generated in the char combustor. Beyond this point, the char combustor will have to be augmented by a supplemental coal feed to supply the difference in heat load required by pyrolysis from that available from the char combustor, shown graphically in Area B.

The reason for submitting this graph is to point out that maximizing of pyrolysis yields in the pyrolysis stage beyond the "char balance point" is not beneficial; also, the generation of CO and $H_2$ in the char combustor is inevitable.

## 9.0 REFERENCES


1. Patel, N. K., Roszkowski, R. T. and White, G. A., "A Screening Evaluation of Rapid Devolatilization Processes," performed by the Ralph M. Parsons Company under GRI Contract No. 5010-322-0048, August 1978.

2. "Factored Estimates for Eastern Coal Commercial Concepts," Interim Report prepared by C. F. Braun and Company under Contract No. EX-76-C-01-2240 for DOE/GRI, September 1978.

3. Glenn, R. A., Donath, E. E. and Grace, R. J., "Gasification of Coal Under Conditions Simulating Stage 2 of the BCR Super-Pressure Gasifier," in "Fuel Gasification," Washington, D.C., Amer. Chem. Soc., pp. 81-103 (1967).

4. Grace, R. J., Glenn, R. A. and Zahradnik, R. L., "Gasification of Lignite by BCR Two-Stage Super-Pressure Process," Ind. Eng. Chem. Process Des. Develop., Vol. 11, No. 1, pp. 95-102.

5. Ubhayakar, S. K., Sticker, D. B. and Gannon, R. E., "Modelling of Entrained-Bed Pulverized Coal Gasifiers," Fuel, 56, pp. 281-291 (1977).

6. Ubhayakar, S. K., Stickler, D. B., VonRosenberg, C. W. and Gannon, R. E., "Rapid Devolatilization of Pulverized Coal in Hot Combustion Gases," Sixteenth Symposium (International) on Combustion, M.I.T., Cambridge, Mass., August 16-20 (1976).

7. Suuberg, E. M., Peters, W. A. and Howard, H. B., "Product Composition and Kinetics of Lignite Pyrolysis," 173rd National Meeting, Amer. Chem. Soc. Div., Fuel Chem., New Orleans, Louisiana, March 20-25 (1977).

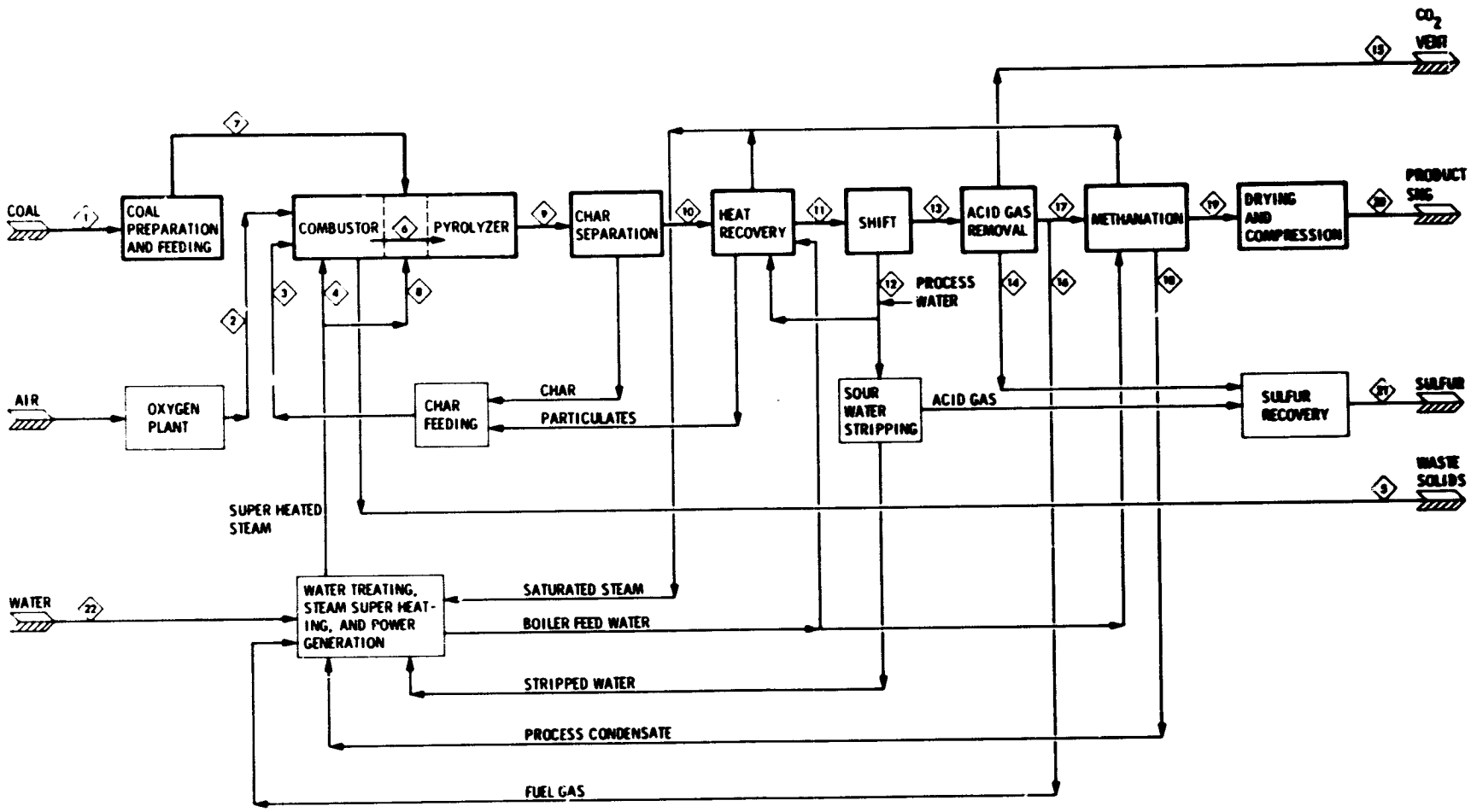


| FEED | |
|---|---|
| COAL | 14,740 ST/SD |
| OXYGEN | 7,991 ST/SD |
| WATER | GPM |

| PRODUCT | |
|---|---|
| SNG | 261.65 MMSCFD |
| SULFUR | 612 ST/SD |

FIGURE II-1. AVCO HTG Coal-to-SNG Process - AVCO HTG Process Block Flow Diagram.

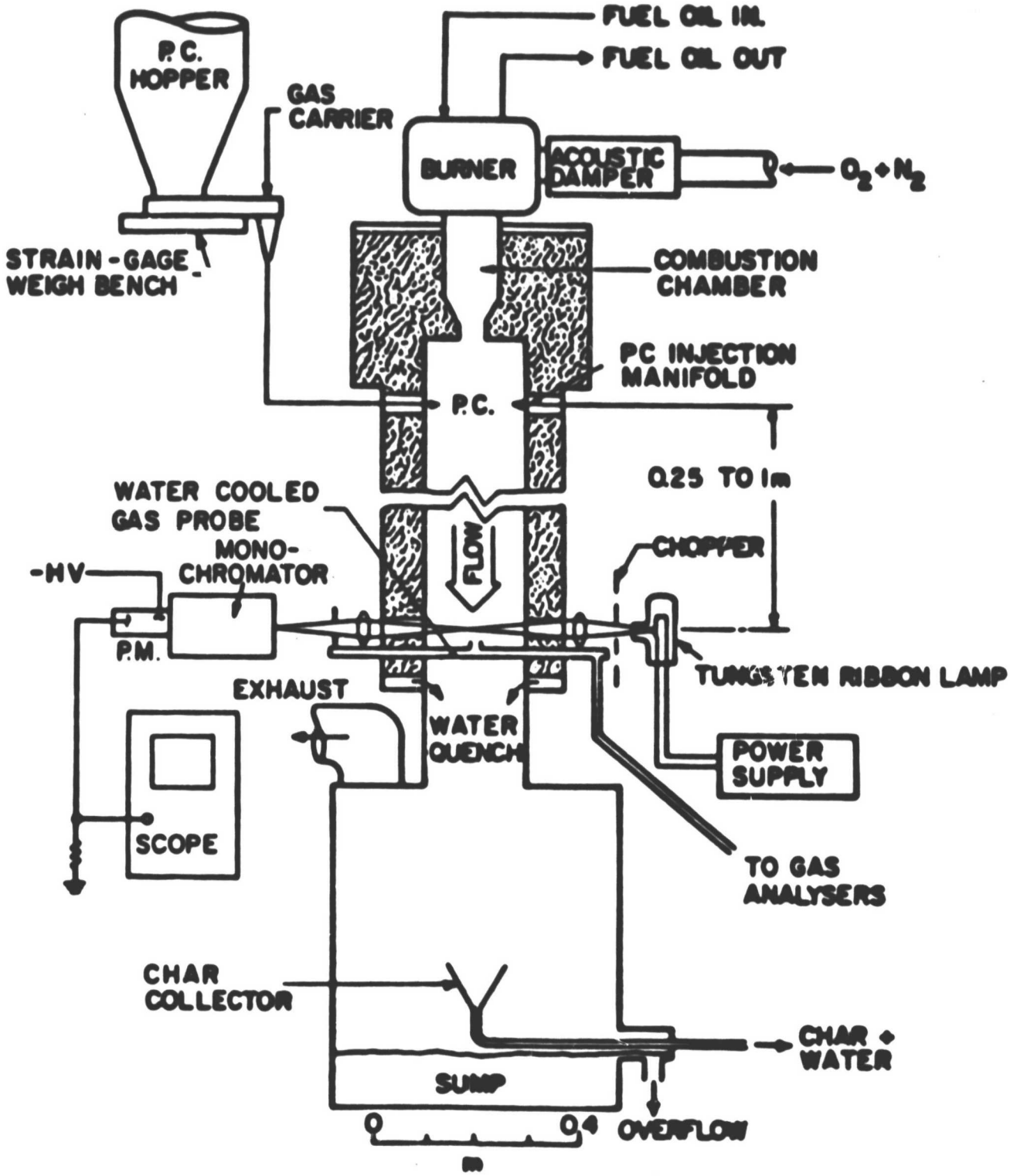


FIGURE II-2. AVCO Entrained Bed Gasifier Used in Low Btu Gas Program.

## EXPLOSION CHAMBER

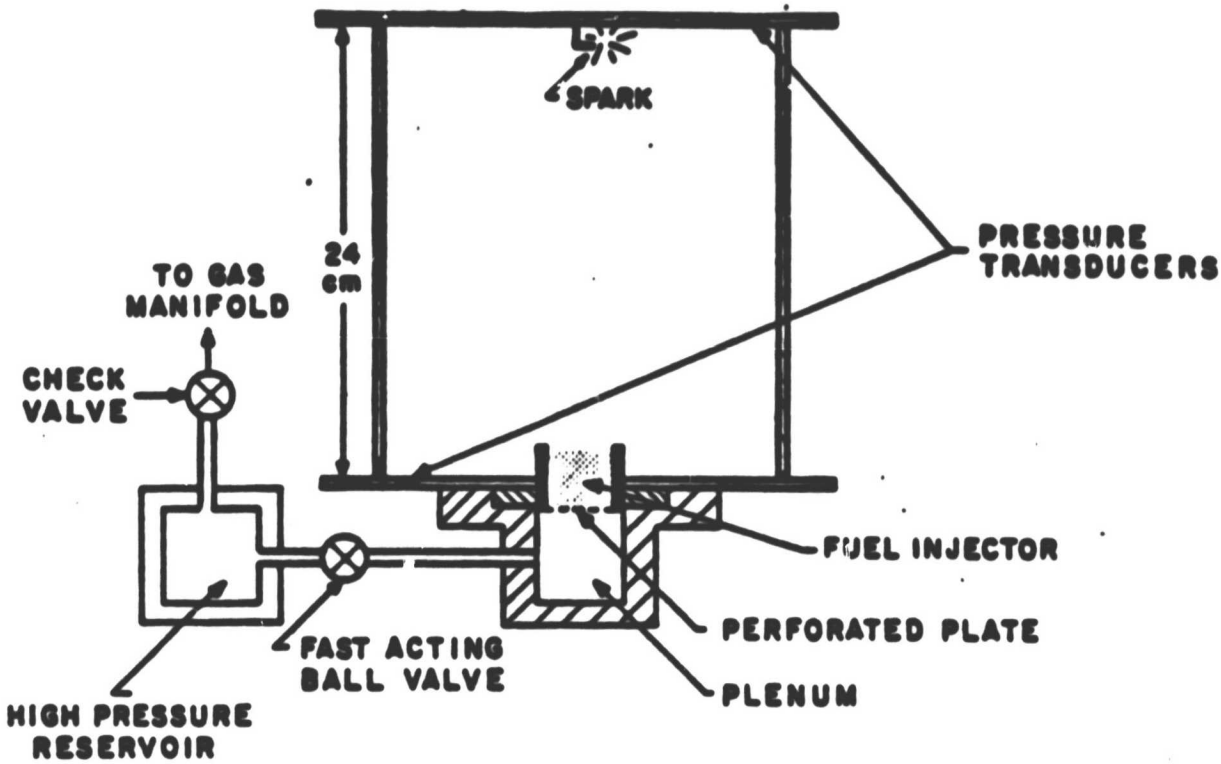


- 12 LITRE VOLUME
- PULVERIZED COAL
- $O_2$, $H_2$, CO GASES, P ~ 1 ATM
- IMPULSIVE BLOWING COAL DISPERSION
- SPARK IGNITION

FIGURE II-3. AVCO Explosion Chamber for Single-Pulse Coal Pyrolysis Experiments.

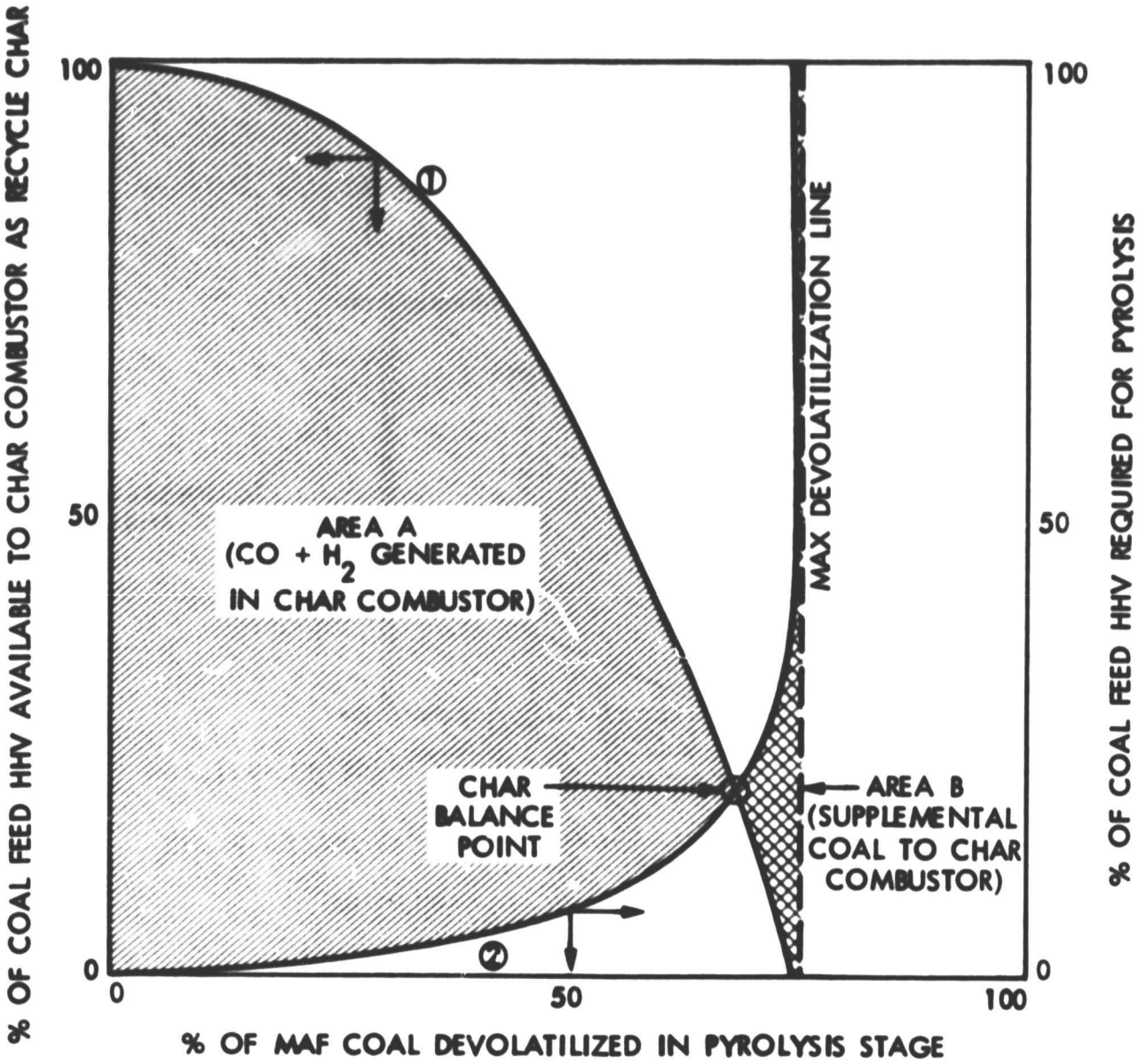


CURVE 1 : HEAT AVAILABILITY TO COMBUSTOR VS % DEVOLATILIZATION IN PYROLYSIS STAGE.

CURVE 2 : HEAT REQUIRED FOR PYROLYSIS VS % DEVOLATILIZATION IN PYROLYSIS STAGE.

FIGURE II-4. Pyrolysis/Char-Combustor Heat Load Relationships.

| STREAM NUMBER | 2 | 3 | 4 | 5 | 6 | 7 | 8 | 9 | 11 | 13 | 16 | 17 | 20 |
|---|---|---|---|---|---|---|---|---|---|---|---|---|---|
| STREAM NAME | OXYGEN TO COMBUSTOR | CHAR TO COMBUSTOR | STEAM TO COMBUSTOR | SLAG FROM COMBUSTOR | COMBUS-TION GAS TO PYROLYZER | FRESH COAL TO PYROLYZER | STEAM TO PYROLYZER | PYROLYZER EFFLUENT | SYNGAS TO SHIFT | SHIFTED GAS TO AGR | FUEL GAS TO STEAM SUPERHEATER | METHANA-TION FEED GAS | PRODUCT SNG |
| COMPONENTS, lb-mol/hr | | | | | | | | | | | | | |
| CO | | | | | 24,658 | | | 37,380 | 37,380 | 9,128 | 730 | 8,394 | 3 |
| $CO_2$ | | | | | 10,716 | | | 23,322 | 23,322 | 51,600 | 1,064 | 12,246 | 551 |
| $H_2$ | | | | | 5,093 | | | 50,302 | 50,302 | 78,554 | 6,281 | 72,244 | 290 |
| $CH_4$ | | | | | | | | 7,628 | 7,628 | 7,628 | 610 | 7,004 | 27,084 |
| $C_2H_6$ | | | | | | | | | | | | | |
| $C_6H_6$(BTX) | | | | | | | | | | | | | |
| $H_2S$ | | | | | | | | 1,551 | 1,551 | 1,577 | | | |
| COS | | | | | | | | 40 | 40 | 14 | | | |
| $SO_2$ | | | | | | | | | | | | | |
| $NH_3$ | | | | | | | | | | | | | |
| $N_2$ | 357 | | | | 357 | | | 863 | 863 | 863 | 69 | 794 | 794 |
| $O_2$ | 20,498 | | | | | | | | | | | | |
| SUBTOTAL - DRY GAS | 20,855 | | | | 40,824 | | | 121,086 | 121,086 | 149,364 | 8,754 | 100,682 | 28,724 |
| $H_2O$ | | | 15,188 | 2,516 | 10,095 | 1,400 | 76,826 | 55,059 | 55,059 | 1,065 | 28 | 319 | 4 |
| TOTAL GAS lb-mol/hr | 20,855 | | 15,188 | | 50,919 | 1,400 | 76,826 | 176,145 | 176,145 | 150,429 | 8,782 | 101,001 | 28,728 |
| Mlbs/hr | 666 | | 274 | 45 | 1,364 | 25 | 1,384 | 3,369 | 3,369 | 2,906 | 92 | 1,060 | 482 |
| SOLIDS Mlbs/hr | | | | | | | | | | | | | |
| MAF (COAL, CHAR, SULFUR) | | 429 | | 5 | | 1,024 | | 429 | | | | | |
| ASH (MINERAL MATTERS) | | 131 | | 131 | | 131 | | 131 | | | | | |
| TOTAL SOLIDS Mlbs/hr | | 560 | | 136 | | 1,155 | | 560 | | | | | |
| TOTAL GAS & SOLIDS Mlbs/hr | 666 | 560 | 274 | 181 | 1,364 | 1,180 | 1,384 | 3,929 | 3,369 | 2,906 | 92 | 1,060 | 482 |
| MMSCFD - GAS | | | | | | | | | | 1,370.11 | 79.99 | 919.92 | 261.65 |
| MOLE WEIGHT - GAS | | | | | | | | | | 19.31 | 10.50 | 10.50 | 16.77 |
| TEMPERATURE, °F | | 1,600 | 980 | | 2,800 | | 980 | 1,600 | 360 | 140 | 100 | 100 | 105 |
| PRESSURE, psia | 600 | 600 | 600 | | 600 | 600 | 600 | 550 | 490 | 470 | 450 | 450 | 1000 |

TABLE II-1. Material Balance for AVCO HTG Coal-to-SNG Process.

# SECTION III
# BELL HMF PROCESS

## SECTION III

## ASSESSMENT OF BELL HMF GASIFICATION PROCESS

### 1.0 SUMMARY

The assessment of the Bell HMF Gasification Process for making SNG was based on meetings and discussions with the developer as well as available literature. Since gasifier tests as of this writing have only been performed in a Single-Stage Gasifier, projected yields supplied by Bell for the Single-Stage were used to complete a material balance for a 250 MMSCFD SNG plant from coal. Other concepts of the Bell HMF reactor, including char recycle, secondary injection, and secondary-injection with char recycle, were assessed as potential improvements to the Single-Stage process when making SNG. However, discussion of these alternates is limited as the projected yields are considered proprietary by Bell.

The Bell HMF (high mass flux) gasifier is an entrained flow, slagging gasifier which reacts pulverized coal, oxygen and steam to produce a synthesis gas. The assessment that follows pertains to the Single-Stage concept where coal, steam and oxygen are reacted in the same zone of the gasifier. The Single-Stage gasifier has the following noteworthy features:

<u>ADVANTAGES</u>

- o high throughput rates (5000 lb/hr/ft$^3$)
- o low steam consumption
- o wide application (products and feeds)

<u>WEAKNESSES</u>

- o low $CH_4$ gasifier yields
- o high oxygen consumption

The data base for the Single-Stage gasifier is presently being developed at Bell's test facility feeding bituminous coal at 1/2 TPH for short duration runs, up to 1 hour in length.

In order to increase the methane yield and decrease the oxygen consumption, a program to investigate secondary-injection of coal is underway. This concept, and the recycling of char, could significantly improve the potential of applying the Bell HMF Gasifier to make SNG. Other potential improvements, such as a molten-slag bath and catalyst applications, need further investigation.

Components requiring development include control and safety systems, solids feeding, slag pot, high temperature gas/solids heat recovery, char fines separation, and scale-up aspects to a commercial size design.

## 2.0 CURRENT STATUS OF DEVELOPMENT

The Bell HMF Gasifier program was initiated in 1976 under contract to ERDA to determine the feasibility of using a rocket-type reactor to economically produce a low Btu gas from air/coal combinations and to evaluate the reactor operating characteristics. From 1976 to 1978, Bell tested their HMF air-blown gasifier with up to 1/2-TPH coal feed rates and one hour test duration. Much of the early testing involved developing a reactor configuration to minimize slag accumulation effects. An impinging sheet injector was identified as the best injector configuration of 4 tested. Coals tested included North Dakota Lignite, Montana Rosebud Sub-bituminous and a Pittsburgh Seam Coal. The most promising results were with the lignite and somewhat less promising results with the sub-bituminous coal. Limited testing with the Pittsburgh coal indicated its conversion to be substantially less than the others. In addition to the reactor injector and coal type variables, the following variables were identified with respect to their effects on carbon conversion:

- Coal and air injection velocities
- Air to dry coal feed ratios
- Residence times
- Mass flux rates

In 1978 and 1979, Bell continued development of their HMF gasifier under company funds and a contract with the New York State Energy and Research Development Authority. Development was aimed at producing a medium Btu gas as

an intermediate product for SNG production. Several short-duration (less than 10 min) oxygen-blown tests were performed with steam injection added to enhance the yields. Pittsburgh seam coal was tested and results indicated difficulty in achieving high carbon conversions. Variables identified with respect to carbon conversion were:

- Oxygen and steam injection velocities
- Residence time
- Oxygen/coal feed ratios

In late 1979, Bell was awarded a one year contract to continue the development of the HMF Gasifier to produce SNG feedstock. Included in this contract are:

- Upgrading of the 1/2-TPH facility to permit more detailed analyses of gas and solid products.
- Testing with bituminous coal and evaluation of the performance characteristics
- Testing and evaluation of a secondary coal injection system

Testing in the upgraded facility is expected to begin in mid-1980.

Further details of the development status are at the end of this section.

## 3.0 PROCESS DESCRIPTION

This is a description of the overall conceptual process for a SNG plant utilizing the Bell Single-Stage HMF coal gasifier. The overall process of coal to SNG is graphically represented in Figure III-1, and a material balance is given in Table III-1.

Bell's single-stage HMF gasifier has been chosen for evaluation since test data are available only with the single-stage configuration at this time. However, there is another two-stage configuration being developed for SNG production, under contract with DOE and GRI; it consists of the single-stage into which secondary coal is injected to produce a methane enhanced gas.

The following sections and the accompanying material balance are preliminary and conceptual in nature; they have been submitted by Bell Aerospace Textron as a "single-stage gasifier subsystem" as follows:

- o Bell Single-Stge HMF Gasifier
- o Heat Recovery
- o Char Separation
- o Gas Scrubbing
- o Shift Conversion

(The other sections represent typical, additional units required to convert coal to SNG. The selection of these sections does not represent the optimum choice; the selections were made in order to assess the Bell HMF Single-Stage Gasifier as it applies to SNG from coal.)

## 3.1 Coal Preparation and Feeding

The coal used for the material balance is a Western Kentucky Bituminous Coal with the following properties:

| Proximate Analysis, as received | Wt. % |
|---|---|
| Moisture | 6.0 |
| Volatile Matter | 37.0 |
| Fixed Carbon | 48.1 |
| Ash | 8.9 |

| Ultimate Analysis (dry), | Wt. % |
|---|---|
| C | 70.5 |
| H | 5.1 |
| O | 9.3 |
| N | 1.4 |
| S | 4.2 |
| Ash | 9.5 |
| | 100.0 |

| Heating value of dry coal, | |
|---|---|
| Btu/lb (HHV) | 12,866 |

The raw coal feed (stream No. 1) is crushed to 70% minus 200 mesh and dried to 2 wt. percent moisture in the coal preparation section.

Crushed and dried coal is fed into lockhoppers which are sequentially pressurized with $CO_2$ pressurizing gas from the Acid Gas Removal sectic to over 600 psia.

The coal and a portion of the $CO_2$ pressurizing gas are pressurized into a transfer line where the flow conditions are "dense phase".

3.2 Gasification

The gasification section consists of 2 identical and parallel gasifier trains; each train can process a maximum of 8200 TPD of coal. Each gasifier consists of several identical coal and oxygen feed elements arranged symmetrically in the reactor head. Process steam is injected into each reactor element to produce operating conditions of nominally 500 psia and about 2500°F. The reactor syngases ( 11 ) consists mostly of CO and $H_2$ and lesser amounts of $H_2o$, $CO_2$, $H_2S$, $N_2$ and $CH_4$, respectively. The resulting overall reaction is as follows:

$$\text{Coal} + O_2 + H_2O\ (\text{steam}) \longrightarrow \text{Reactor Syngas} + \text{Slag} + \text{ungasified carbon}$$

The reactor syngas plus solids exit the gasifier into a wider diameter slag-pot where water is sprayed to quench the reactants to 1900°F and to freeze the slag. Most of the solidified slag drops to the bottom of the slag pot; the remaining slag and ungasified carbon is entrained with the raw, hot syngas ( 13 ).

3.3 Heat Recovery

The raw hot syngas with entrained solids is routed to the Heat Recovery section where high pressure (600 psi) steam is generated and superheated by cooling of the syngas and solids from 1900°F to 600°F by indirect heat exchange.

### 3.4 Char Separation

The raw, cooled syngas ( 14 ) with entrained solids is routed to the Char Separation section where most of the solids are recovered by cyclone separation; the recovered char is routed to steam boilers in the Steam Generation Section.

### 3.5 Gas Scrubbing

The syngas from the cyclone ( 16 ) is routed to a Venturi scrubber system which simultaneously removes the particulates from the gas, humidifies and cools the syngas to its water dewpoint of 345°F. The particulates are removed as a slurry which subsequently routed to the Solids Disposal section.

### 3.6 Shift

Process steam (600 psia, 530°F) is added to the dust free syngas in the Shift section, where the $H_2$ to CO molar ratio is adjusted to 3 via the water-gas shift reaction as follows:

$$CO + H_2O \xrightarrow[\text{Catalyst}]{\text{Sour Shift}} CO_2 + H_2$$

The shifted syngas is cooled to 100°F; the water that condenses from the syngas is separated in a knock-out drum and contains $H_2S$ and trace amounts of $NH_3$. This sour water is then routed to the Sour Water Stripper.

### 3.7 Acid Gas Removal

The Shifted syngas ( 21 ) is routed to the Acid Gas Removal section which consists of an $H_2S$ absorber, an $H_2S$ stripper, a $CO_2$ absorber and a $CO_2$ stripper. The overhead stream from the $H_2S$ stripper is routed to the Sulfur Recovery section. The $CO_2$ from the $CO_2$ stripper is split into two streams: part of the gas is recycled back to the Coal Feed section where it is used as "pressurizing gas," the rest of the $CO_2$ is vented to the atmosphere.

### 3.8 Methanation, Compression and Drying

The clean syngas ( 24 ) is routed to the methanation section where it is converted to a final product gas interchangeable with natural gas. The methanation reaction is as follows:

$$3H_2 + CO \xrightarrow[\text{Catalyst}]{\text{Ni}} CH_4 + H_2O$$

The above reaction is highly exothermic, and control of the reaction temperature is exercised by a combination of heat recovery and hot product gas recycle. The hot recycle allows the recovery of essentially all of the methanation heat of reaction as high level useful energy.

After methanation, the gas is cooled, compressed, and dehydrated in a triethylene glycol drier. The product gas then leaves the plant.

The following sections are considered supporting or utility units.

### 3.9 Oxygen Plant

The Oxygen Plant consists of commercially available air-separation plants where liquid oxygen is produced and pumped to its final pressure (600 psia +). The pressurized liquid oxygen is then vaporized by heating to 77°F and routed to the gasifier. The oxygen purity is 99.6 volume percent.

### 3.10 Sour Water Stripper

The sour water from the Shift section ( ⟨20⟩ ) is stripped to produce a reusable process condensate using low pressure steam. The stripper overhead (⟨29⟩ ) is routed to the Sulfur Recovery section.

### 3.11 Sulfur Recovery

The Sulfur Recovery section includes a Claus unit and a tail gas treating unit. The Claus unit converts over 90% of the sulfur in the form of $H_2S$ to elemental sulfur via the following overall reaction:

$$H_2S + 1/2\ O_2 \xrightarrow[\text{Catalyst}]{\text{Alumina}} S + H_2O$$

The conversion takes place in a reaction furnace and catalytic reactors; since the reaction is exothermic, steam is generated in heat exchangers which also condenses the sulfur vapors formed. The tail gas from the Claus unit is passed to a Beavon-Stretford tail gas plant. Here, all unconverted sulfur compounds are catalytically converted to $H_2S$; the gas is subsequently

scrubbed with a solution and oxidized to elemental sulfur. The purified tail gas is odorless and contains typically less than one PPMV of $H_2S$ and less than 50 PPMV of total sulfur compounds.

### 3.12 Solids Disposal

The Solids Disposal section handles all the waste solids of the plant including the boiler ash from the steam boilers, the Dry Slag ( 12 ) from the Gasification section, and the Particulates Slurry ( 18 ) from the Scrubbing section. The Solids to disposal is a 70 wt.% solids slurry sent back to the mine-site.

### 3.13 Water Treatment, Steam and Power Generation

This section includes all water, steam, and power generation as required for the entire plant.

Steam is generated by burning the unconverted carbon from cyclone separation ( 15 ). It is assumed that this char is essentially sulfur free; hence, flue-gas desulfurization is not required.

### 3.14 General

The Bell HMF, single-stage coal-to-SNG gasification process is preliminary and conceptual as presented. The basic yields from the Bell HMF Gasifier are yet to be demonstrated, especially as regards the following:

(a) 90% carbon conversion to gas at the assumed oxygen/coal feed ratio;
(b) the physical form and size of the 10% ungasified carbon;
(c) the composition of the char used for boiler fuel.

The overall process described did <u>not</u> include a detailed engineering design; the purpose of the material balance is to identify strengths and weaknesses of the process. Also, a preliminary cost estimate was generated in order to further identify strengths and weaknesses of the process and hence be able to make cost-effective recommendations to improve the process.

The overall process is shown as a self-sufficient operation with coal, air and raw water as the only feed requirements. It has been assumed that no supplemental coal is required for steam and power generation; i.e., the steam and power are generated from efficient process heat utilization and from the burning of the unconverted char in steam boilers with subsequent power generation. It has also been assumed that the unconverted char is essentially sulfur-free; hence, flue gas desulfurization is not required on the boiler flue gas. However, particulate removal of the flue gas will be necessary.

Because of the preliminary nature of the process design, it is suggested that any comparative conclusions with other processes be made with caution regarding overall process efficiency (i.e., coal HHV to SNG HHV).

An overall material balance of the plant is as follows:

| IN | (lb/hr) |
|---|---|
| Coal (6% moisture) | 1,452,700 |
| Air to $O_2$ Plant | 4,202,752 |
| Air to Boilers | 1,346,718 |
| Air to Sulfur Plant | 124,880 |
| Raw Water | 4,520,440 |
| | 11,629,490 |

| OUT | |
|---|---|
| $CO_2$ Vent | 1,672,644 |
| SNG | 484,503 |
| Sulfur | 57,355 |
| Clean Stack Gases | 1,859,116 |
| Solids to Disposal | 185,161 |
| Water Losses | 4,200,000 |
| $N_2$ from $O_2$ Plant | 3,170,711 |
| | 11,629,490 |

## 4.0 STRENGTHS AND WEAKNESSES

The following strengths and weaknesses refer to the single-stage gasifier as presented in the Process Description:

### 4.1 Strengths

o <u>High Throughput Rates</u>

The Bell HMF process charges 5,000 lb/hr of reactants (coal, steam and oxygen) per $ft^3$ of internal volume in the gasifier reaction section. This is over 70 times the rate for a Lurgi gasifier operating at similar pressures.

o <u>Small Reactor Size</u>

The small reactor size when scaled to a commercial plant size represents the following advantages:

a) Use of best corrosion resistance materials in critical areas as an economical alternative in design.

b) Use of water cooling of reactor with failsafe features in the event of overheating as an economical alternative in design.

c) Small inventory of reactants allows for rapid quenching and shutdown of reactor in case of overheating.

d) Ability to move quickly from pilot plant to demonstration plant scale with minimal hardware cost.

e) Ability to build and test a commercial size reactor at the factory prior to shipping to the field.

f) Minimal cost for gasifier duplication if separate trains required.

o <u>Low Steam Consumption</u>

The Bell HMF reactor has a low steam to dry coal ratio; it is about 10% of the Lurgi gasifier.

- Pressure Independent

  The syngas yield is essentially pressure independent (provided that the superficial gas residence times are the same).

- High, Single-Pass Carbon Conversion

  85% carbon conversion was measured during initial oxygen blown tests using Pittsburgh seam coal. It was also observed during testing that with design modifications, 90% conversion is feasible at lower oxygen to coal rates.

- Wide Application

  The $CO + H_2$ represents 87 volume percent of the reactor syngas make; hence, the Bell HMF gasifier can be used to generate syngas from coal to produce a variety of end products, such as SNG, hydrogen, methanol, M-gasoline, ammonia, medium-Btu fuel gas, low Btu fuel gas (air-blown), power from combined cycle plants, power from fuel cell applications, etc.

- Sulfur Free Char

  If the ungasified char is sulfur-free, then the use of it as a boiler fuel without flue gas desulfurization represents a significant cost savings.

- No Supplemental Coal Requirements

  The carbon in the ungasified char represents about 10% of the carbon in the coal. By burning this char in a steam boiler and utilizing the process generated steam, the entire plant is self-sufficient; therefore supplemental coal firing in a steam boiler is not required.

- Negligible Tars or Liquids Produced

  The gasifier produces essentially zero hydrocarbon liquids or tars.

- Dense-Phase Feed Transfer Lines

  The transfer lines from the coal lockhoppers to the gasifier are dense phase thereby minimizing the size of the transfer lines and the volume

of gas carried with the coal feed. Use of dry dense-phase feed as opposed to a slurry feed minimizes the sensible heat and therefore the oxygen needed to reach reactor operating temperature.

- Operability With a Wide Range of Coals

  Coals that were successfully tested include Montana Rosebud, N. Dakota Lignite and Pittsburgh seam; hence, caking coals present no apparent operational problems.

4.2 Weaknesses

- Low $CH_4$ Yield

  In the single-stage configuration, the methane yield from the reactor is only 0.1% of the syngas make. (However, a secondary coal injection concept has been proposed to enhance the methane concept.)

- High Temperatures

  The gasifier operates at about 2400-2500°F which requires refractory design and possibly expensive metals. Als , the high temperatures produce a liquid slag that can resolidify and accumulate in the gasifier and other downstream equipment causing a reduction in throughput, fouling, etc.

- Solids in Gas Heat Recovery

  Heat recovery of the gasifier effluent involves difficult solids and gas heat exchanger design.

- High Oxygen Consumption

  The oxygen to dry coal weight ratio is 0.71.

- Difficult Coal Feed Control

  The commercial scaled design includes multiple coal and oxygen injector elements; this means solids distribution to each element must be controlled carefully.

o Lockhopper System

The cumbersome lockhopper system is required to pressure the coal into the dense-phase transfer line.

c Data Base

Several key areas require further development and demonstration:

- 90% carbon conversion in a single pass gasifier using a bituminous coal at the $O_2$ to carbon ratio projected from observed trends.

- The form and composition of the ungasified carbon

- The sulfur distribution to $H_2S$, COS and char

- Heat recovery of solids and gas streams including possible soot in gas

- Scalability to full scale reactors (commercial size) including multiple feed injection elements

- HMF control and safety systems, including difficult solids flow control to multiple feed injectors

## 5.0 POTENTIAL IMPROVEMENTS

In this section, the potential improvement items are being suggested as potential solutions to problem ares that appear to exist as the process is now proposed. These also take into account the stage of development of the overall process and the conceptual status of many of the companion operations to and around the proposed gasification step. They are the result of reviewing items mentioned in other sections such as weaknesses, alternates, disadvantges and status of development. It is not suggested that these are the final solutions

but they are potentials only viewed from the perspective of this assessment and will require more detailed investigation and evaluation prior to testing. It is for this reason that they are called potential improvements.

To assess the potential improvement items, it was decided to develop SNG gas costs since this is the most comprehensive way of accounting for the overall effect. Cost information from the literature was used to calculate SNG gas costs from the capital and operating costs of a 250 MMSCFD SNG plant; SNG gas costs for each potential improvement item are then compared to that for the Bell Single-Stage Coal-to-SNG process as described in previous sections.

The following potential improvements were assessed as to their potential cost effectiveness compared to Bell's Single-Stage configuration described in the previous sections:

Case 1: Single-Stage (as described in Process Description and herein referred to as the Base Case)

Case 2: Single-Stage + Char Recycle

Case 3: Secondary Injection

Case 4: Secondary Injection + Char Recycle

Case 5: Use of Molten-Slag Bath with Single-Stage

Case 6: Separation of Stages with Molten-Slag Bath

Case 7: Catalyst Application

Case 8: Use of Lower Grade Coals

Cases 2, 3 and 4 are reactor configurations that have been suggested by Bell as alternatives to the Single-Stage Base Case configuration. However, only

Case 1, the Single-Stage Base Case, has been tested in the 1/2-TPH facility; Cases 2, 3 and 4 are to be tested in an upgraded facility still being constructed as of May, 1980. Hence, yields from Cases 2, 3 and 4 are entirely hypothetical. JPL elected to use the Single-Stage configuration as the Base Case in the assessment since this is the only alternate with any test data. (Although some test data for the Single-Stage Base Case configuration exists, the Base Case yields also represent hypothetical extrapolations of data; the effects of these extrapolations will be presented later in this section.) Theoretical yields for Cases 2, 3 and 4 were supplied by Bell at the request of JPL in order to assess the effect they have on SNG gas cost compared to the Base Case gas cost.

Cases 5, 6, 7 and 8 are modifications proposed by JPL as potential improvements. In suggesting these modifications, it is realized that yields would have to be hypothesized where possible as was done by Bell for Cases 2, 3 and 4. It was also recognized that much of the Base Case yields represent hypothetical extrapolation of data; if in subsequent testing the projected yields for the Base Case and Cases 2, 3 and 4 are not realized, Cases 5,6, 7 and 8 as suggested by JPL represent modifications which could improve the yields. However, as was stated earlier, these improvements would require more detailed investigation and evaluation prior to testing as they would involve considerable revamping to Bell's 1/2-TPH facility.

## 5.1 Assessment of Reactor Configurations to be Tested in Bell's 1/2-TPH Facility

### 5.1.1 Case 2: Single-Stage + Char Recycle

This alternate has the same configuration as the Base Case except that the ungasified carbon, recovered as char in the Char Separation section (cyclones), is recycled back to the main coal feed system. It is then fed with the coal into the gasifier. Bell has assumed that the char will attain a high, single-pass carbon conversion rate as is assumed for the parent coal. In this way the char is eventually recycled to extinction.

The effect of recycling the char compared to the Base Case is listed in Table III-2. The percent carbon conversion in the gasifier is nearly 100 percent but as shown by the Relative Gas Costs of 1.01 compared to the Base Case, there is apparently no significant advantage to recycling the carbon to the gasifier. In fact, there is a slight penalty mainly due to the increase in capital costs from the addition of a Flue Gas Desulfurization (FGD) Unit in Case 2. In the Base Case, it had been assumed that the ungasified carbon could be recovered in the Char Separation section (cyclones) as a sulfur-free char and used as a boiler fuel for the plant utility needs. Other predicted results could be identified for their effects; however, the predicted yields for the Recycle Case are considered by Bell to be proprietary at this time thereby precluding any detailed explanation of the effects. Nevertheless, a general analysis of the chemistry involved in recycling char can be made.

In the Base Case, the overall gasification reaction of coal to syngas can be described as follows:

$$\underset{\text{coal}}{CH_{0.86}O_{0.10}} + \underset{\text{oxygen}}{0.39\ O_2} + \underset{\text{steam}}{0.16\ H_2O} \longrightarrow \underbrace{0.87CO + 0.03\ CO_2 + 0.48H_2}_{\text{syngas}} + 0.11\ H_2O$$

$$+\ \underset{\text{Ungasified Carbon}}{0.10C}$$

At the gasifier temperature of over 2500°F, there is very little methane in the product as any produced is essentially reformed to CO and $H_2$. It can be seen that most of the hydrogen produced comes from the coal (.43 out of .48) with little steam decomposition (0.05 out of 0.16). In Case 2, where the ungasified carbon is recycled to the reactor for further reaction, it is obvious that essentially all of the hydrogen would be produced by the steam carbon reaction as follows:

$$C + H_2O \longrightarrow H_2 + CO$$

However, this reaction is endothermic which would reduce the overall gasification reaction temperature. Hence, an exothermic reaction is needed to balance the endothermic reaction above such that the reactants are kept around 2500°F. By introducing additional oxygen to react the char to form CO (assuming little $CO_2$ exists at this temperature), the overall reaction can be adjusted by the relative oxygen to steam ratio to maintain the gasifier at 2500°F. This oxygen-to-steam ratio is calculated to be 1.7 to 2.0 depending on the temperature of the reactant char, steam and oxygen. This oxygen to steam ratio of 1.7 to 2.0 to gasify the recycle char by itself compares with an oxygen-to-steam ratio of 2.4 (0.39/.16) for the Base Case. An overall reaction to gasify the additional char can now be written with the minimum stoichiometric amount of oxygen and steam required to react all of the recycle carbon as follows:

$$\underbrace{C}_{\text{Recycle Char}} + 0.39\ O_2 + 0.22\ H_2O \longrightarrow CO + 0.22\ H_2$$

Since $CO_2$ will be formed to some extent in the above reaction of the char, then the oxygen demand a priori will be higher than the 0.39 moles $O_2$ per mole of carbon for the recycle char. Hence it can be concluded that the moles of oxygen per mole of carbon for the recycle char will be higher than that for the parent coal since the oxygen to carbon for the Base Case is 0.39 also.

The stoichiometry above is discussed to estimate a lower limit on the oxygen demand to the gasifier in order to achieve essentially 100% carbon conversion. This minimum oxygen demand can be calculated to be around 0.40 moles of oxygen per mole of carbon or about 0.75 pounds of oxygen per pound of dry coal.

In order for the overall carbon conversion to be nearly 100 percent, the percent recycle carbon gasified must approach 80-90 percent in order to keep the recycle quantity to an acceptable level. However, the mechanism by which the char is gasified, i.e., by heterogeneous reactions of the char with the

available gaseous compounds, could severely limit the conversion of the recycle char in a short residence time reactor. Of the various heterogeneous reactions possible, the following are considered to be the most probable:

(1) $C\ (char) + 1/2O_2 \longrightarrow CO$

(2) $C\ (char) + H_2O \longrightarrow CO + H_2$

(3) $C\ (char) + CO_2 \longrightarrow 2CO$

(4) $C\ (char) + 2H_2 \longrightarrow CH_4$

Reaction rate constants for reactions (1), (2) and (3) have been reported in the literature[1] to be 1900 $(sec)^{-1}$ $(atm\ O_2)^{-1}$, 3.3 $(sec^{-1})$ $(atm\ H_2O)^{-1}$, and 1.9 $(sec^{-1})$ $(atm\ CO_2)^{-1}$ respectively at 3100°F. Another source[2] has reported the initial reaction rates for reactions (1), (2), (3) and (4) to be 100 $sec^{-1}$, 0.0001 $sec^{-1}$, 0.001 $sec^{-1}$, and 0.00005 $sec^{-1}$ respectively at 1 atm and 2000°F. Hence it is advantageous when recycling char to design the reactor so that reaction (1) is favored. Since the oxygen is in great demand in the reducing atmosphere of the gasifier, the recycle char will compete for the oxygen with the other reactive compounds. Since the reaction rates of the coal volatiles are even faster than the oxygen-char rates, reaction (1) could be enhanced if the oxygen and char were fed in a separate injector from the coal injectors within the same gasifier. In this way, the activation energy of the char-oxygen reaction would be supplied by radiation in the gasifier to react all of the char to CO. Then, the CO formed would react with the steam and pyrolyzed volatiles from neighboring injector elements.

### 5.1.2 Case 3: Secondary Injection

This alternate has the same configuration as the Base Case except a secondary stream of fresh coal is injected into the gasifier where it reacts with the hot gases produced from gasification of primary coal. The effect is to produce a methane enhanced syngas.

Details of this configuration are considered by Bell to be proprietary at this time.

As mentioned above, this is a hypothetical case since it has yet to be tested. However, if the yields given by Bell to JPL can be realized, this case has significant advantages over the Single-Stage Base Case as shown on Table III-2 by the Relative Gas Cost of 0.92 to the Base Case. The saving is mainly due to a substantial reduction in the oxygen requirement, a smaller Methanation section, and a smaller Acid Gas Removal section.

In addition to proving that the methane yields are substantially enhanced, Bell will have to demonstrate the reactor's operability with secondary injection. Considerable operational difficulties were experienced by the Eyring Research Institute in experiments with a secondary injection of coal into their high mass flux, entrained gasifier such that they abandoned the secondary injection approach. Specifically, Eyring's problem centered on coal agglomeration and coal particles sticking to the walls of their pyrolysis section.

When considering the methane enhancement of the syngas from the Base Case, an analysis of the mechanism for methane production is beneficial. Methane may be viewed as forming in the pyrolysis section of a gasifier by the following reactions:

1) Coal + heat $\longrightarrow$ char + gas (including $H_2$, $CH_4$, CO, $CO_2$ and $C_2$ - $C_4$) + liquids ($C_5$+)

2) $2C\ (char) + 2H_2O \longrightarrow CH_4 + CO_2$

3) $C\ (char) + 2H_2 \longrightarrow CH_4$

4) $CO + 3H_2 \longrightarrow CH_4 + CO$

From stream 11 of Table III-1 for the Base Case, which is essentially the hot gases that secondary coal could be injected into, the hydrogen partial pressure is calculated to be 150 psi. This is very low for any significant hydrogenation reactions as are indicated by reactions 3 and 4. Since the partial pressure of $H_2O$ is low also (10 psi), reaction 2 is limited

to a low conversion to methane also. Hence, the main contributor for methane enhancement is from reaction 1. Methane enhancement from secondary injection is a result of the pyrolytic reactions of the secondary coal. The coal devolatilizes to char, gas, and liquids. As the temperature is increased, the liquids yield will decrease and the gas yield increase as shown in a plot of tar and gas yield vs. temperature for devolatilization of Pittsburgh HvAb coal in the literature[3]. It should be noted that for short residence time reactors, chemical equilibrium has not been reached which explains the existence of liquids in the above mentioned plot at temperatures as high as 2100°F; i.e., a calculation of equilibrium composition at 2100°F would show no hydrocarbon liquids. Such is the case for methane also, as a higher methane yield is possible in a short residence time reactor than an equilibrium calculation would predict. However, by calculating the methane yields for devolatilization of a Pittsburgh seam coal from data presented by Mentser[3], there appears to be a maximum methane yield around 1800°F. The methane yield calculated is about 3 pounds $CH_4$ per 100 pounds of a vitrain element cut from the Pittsburgh coal (Vitrain was selected since it represents the most abundant maceral, about 80-90 volume percent of the petrographic components of Pittsburgh coal). For this Pittsburgh coal, the percent carbon in the feed coal that is pyrolyzed to $CH_4$ is estimated to be less than 5 percent at the optimum temperature of 1800°F.

### 5.1.3 Case 4: Secondary Injection + Char Recycle

This alternate is a combination of Cases 2 and 3; the ungasified carbon from the gasifier, including char from primary and secondary coal, is captured in cyclones and recycled back to the primary coal feed system. The assumed carbon conversion of this recycle char is high as is assumed for primary coal carbon conversion. In this way, any ungasified carbon is eventually recycled to extinction.

Details of this configuration are considered by Bell to be proprietary at this time.

As previously mentioned, this is a hypothetical case since it has yet to be tested. However, if the hypothesized yields can be realized, this case also has significant advantages over the Single-Stage Base Case as shown on



C-2

Table III-2 by the Relative Gas Cost of 0.91 to the Base Case. As is true for Case 3, the savings is mainly due to a substantial reduction in the oxygen requirement, a smaller Methanation Section, and a smaller Acid Gas Removal Section. In addition, the coal usage for Case 4 is significantly lower than the Base Case as indicated by the value of the Relative Operating Cost of 0.93. This case, since it is a combination of Cases 2 and 3, represents the furthest extrapolation from actual test data. The discussion on conversion of recycle char in Case 2 and the discussion on methane enhancement by secondary coal injection in Case 3 applies to this case also.

5.2 Comments on Bell's Critical Assumptions Made in Case 1

Although the Single-Stage gasifier for this case has been operated in the 1/2 TPH test facility, much of the data base remains to be demonstrated. Of particular importance are the following assumptions.

5.2.1 Assumption that 90% carbon conversion is attained at the given oxygen ratio of 0.71 for a bituminous coal:

From the performance data for the Single-Stage HMF gasifier reported by Bell, the gasification of Pittsburgh Seam coal to a high carbon conversion could be a difficult task at the oxygen to coal ratios suggested by Bell. This is evident by comparing the "Bell Data" point with the "Bell Projection" point on Figure III-2. Also shown in Figure III-2 is data for the Eyring coal gasifier[4] which is very similar to the Bell Single-Stage gasifier using coal, steam and oxygen. The plotted Eyring data also suggests that the 90% carbon conversion at 0.71 steam to carbon ratio could be difficult to obtain from Pittsburgh Seam Coal (conversion of W. Kentucky and Pittsburgh Seam Coal is expected to be very similar); i.e., 90% carbon conversion could require a significant increase in the oxygen/coal ratio.

To illustrate the importance of oxygen consumption on the overall production cost of SNG from coal, a rough estimate of the gas cost was made using the "Bell Projection" point on Figure III-2 and the "Bell Data" point for the Single-Stage configuration. Increasing the $O_2$/coal ratio from 0.71 to 0.85 has the effect of increasing the product gas cost by about 16 percent as shown in Table III-3. Hence, it is obvious that if the Bell process is to be

economically feasible, the oxygen consumption will have to be reduced. Bell has recognized this and by optimizing the following variables, they expect to substantially decrease the oxygen consumption:

- Oxygen injection velocity
- Steam injection velocity
- Residence time
- Coal injector refinements.

5.2.2 Assumption that the ungasified carbon can be recovered and used in steam boilers.

If the ungasified carbon is in the form of soot (soot is defined here as being the product of the gas-phase cracking of an unstable mixture to form carbon and other products), then it is not likely that cyclones will recover the soot. However, if the ungasified carbon is in the form of a char (char is defined here as being that part of the coal which is not gasified), then cyclone recovery is a practical way to recover the heating value of the ungasified carbon.

To illustrate the effect that this has on the overall production cost of SNG from coal, a comparison was made of the gas cost for the Single-Stage (Base Case) and what the cost would be if the ungasified carbon was not recovered. In this case, additional coal is required to generate plant steam and power and the additional cost of a flue gas desulfurization unit is added. The overall calculated effect is that the gas cost is increased 6 percent over the Base Case as shown in Table III-3.

5.2.3 Assumption that the unrecovered char is essentially sulfur free:

If the recovered char is sulfur free, then flue gas desulfurization would not be required in the Base Case where the recovered char is used to generate process and utility steam.

To illustrate the effect this assumption has on the overall production cost of SNG from coal, a comparison was made of the gas cost for the Single-Stage (Base Case) and what the cost would be if the boiler flue gas

required desulfurization. The overall effect calculated is that the gas cost increases 2 percent over the Base Case, as shown in Table III-3.

## 5.3 Preliminary Assessment of Potential Improvements Suggested by JPL

### 5.3.1 Case 5: Use of Molten-Slag Bath with Single-Stage

If the single stage gasifier were operated with a molten-slag bath, potential carbon conversion could be further increased at the same oxygen consumption (Refer to Figure III-3). The Saarberg/Otto (5) synthesis gas process is a process similar to the slag bath concept for producing medium or low Btu gas from coal, char, or liquid hydrocarbons. A 264 TPD demonstration plant is in operation now in Saarbergwerke AG, West Germany. A 99 percent carbon conversion has been reported at 0.82 pound oxygen per pound coal and 0.72 pound steam per pound coal. Certain constituents in the ash, such as iron oxide, are believed to act as an oxygen transfer medium via the following reactions:

$$Fe_2O_3 + C \longrightarrow 2\ FeO + CO$$
$$2\ FeO + 1/2\ O_2 \longrightarrow Fe_2O_3$$

If a molten-slag bath is maintained in the slag pot, ungasified char particles would be thrust onto the surface of the slag. Hence, it is postulated that carbon conversion will tend to increase via the mechanism suggested above and by the fact that the char particles will remain at the high, slagging temperature for a longer period of time.

If the single-pass carbon conversion were increased to essentially 100 percent, the net effect would be similar to that for Case 2, where the ungasified carbon is recycled to extinction. The gas cost, relative to the Base Case, is 1.01. Although this case calculates to be more expensive than the Base Case, this suggestion is made with the Critical Assumptions indigenous to the Base Case kept in mind. Since demonstration of all the critical assumptions seems improbable, suggestions which add to the probability of success are considered here to be a potential improvement. For example, if the Base Case used the present conversion data from the test facility, the relative gas cost

would be 1.16 as shown in Table III-3. Hence, the relative gas cost for this case would then be 0.87 (= 1.01/1.16).

### 5.3.2 Case 6: Separation of Stages with Molten-Slag Bath

The effect of methane enhanced yields on the process is significant as evidenced by the relative gas cost for the Secondary-Injection Case in Table III-3 of 0.92. This is mainly due to the reduction in the oxygen requirement as previously discussed. To realize the enhanced methane yield and the subsequent lower oxygen requirement, a two-stage process is suggested using the Molten-Slag Bath concept for the first stage and an efficient mixing, reverse flow injector for the second stage. A schematic of the gasifier configuration is shown on Figure III-4. Inherent beneficial features to this configuration are as follows:

(a) The two-stage process yields higher methane with a subsequent lower oxygen demand: methane formation from flash pyrolysis can be enhanced if the temperature is lowered to around 1700-1900°F.

(b) The high single-pass carbon conversion for the first stage minimizes the char recycling since essentially 100 percent of the carbon in the coal and in the recycle char from the second stage is converted in the Molten-Slag Bath, first stage.

(c) The molten-slag is kept separate from the secondary coal to prevent agglomeration. The agglomeration problem is what caused Eyring Research Institute to abandon the secondary injection concept. By keeping the molten-slag in the first stage, the problem of agglomeration of secondary coal is minimized.

(d) The hot gases from the first stage are injected into the second stage utilizing an efficient reverse flow injector to better mix with the secondary coal. Bell has observed better yields with the reverse flow injector; however, it was abandoned due to slag accumulation problems.

(e) Interruption of char flow doesn't shut the system down. In other two stage gasifiers (e.g., AVCO and the Bi-Gas processes), an interruption in char flow would of necessity shut the gasifier down. In this case, as is true for Cases 3 and 4, the interruption of char flow wouldn't necessitate a system shutdown as coal would continue to flow to the first stage.

It is expected that the methane enhancement will not be as high as Bell has assumed for the Secondary Injection plus Char Recycle Case; however, the methane will be increased thereby giving it all the advantages of Case 4 except to a lesser degree. Hence, the relative gas cost to the Base Case is expected to be between 0.91 to 1.0.

### 5.3.3 Case 7: Catalyst Application

By applying a catalyst to the secondary coal, the formation of methane could be enhanced by promoting the following heterogeneous reactions:

$$C + 2H_2O \longrightarrow CO_2 + CH_4$$
$$C + 2H_2 \longrightarrow CH_4$$

In addition to possible enhanced methane yields in the secondary-injection section, the catalyst will also increase the reactivity of the recycle char as it is recycled to the first stage.

At the present time, no data were found in the literature for catalytic high mass flux entrained gasifiers. However, early entrained gasifier development in a single-stage gasifier at Morgantown [6] showed that when lime was added to the coal, the following effects were noticed:

(a) Slagging accumulation problems were significantly reduced apparently due to a lowering of the slag viscosity by the lime;

(b) The $H_2S$ and COS contents were reduced by 71 percent and 89 percent, respectively, in the syngas;

(c) Carbon conversion may have been increased.

These observations with a single-stage gasifier further suggest that potential improvements by the addition of another material to the coal could have advantages in addition to the catalytic effects of producing more methane (in a two-stage or secondary injection reactor) and yielding higher carbon conversions. Any improvements gained, however, will have to be offset by the additional costs of the catalyst, the catalyst application technique, and the catalyst recovery technique. It is suggested that this potential improvement be further investigated to better define the overall effects of catalyst application in the Bell HMR Gasifier.

5.3.4 Case 8: Use of Lower Grade Coals

Air-blown test with N. Dakota Lignite and Montana sub-bituminous coals indicated higher carbon conversion in the single-stage, 1/2-TPH facility. A comparison of W. Kentucky bituminous coal, Montana sub-bituminous coal and N. Dakota Lignite is shown below:

| Ultimate Analysis (dry wt.%) | W. Kentucky Bituminous | Montana Sub-bituminous | N. Dakota Lignite |
|---|---|---|---|
| C | 70.5 | 68.0 | 64.34 |
| H | 5.1 | 4.4 | 4.27 |
| N | 1.4 | 1.0 | 0.87 |
| S | 4.2 | 1.0 | 1.53 |
| O | 9.3 | 14.3 | 18.76 |
| Ash | 9.5 | 11.3 | 10.23 |
| | 100.0 | 100.0 | 100.0 |

The most notable differences in the elemental analyses are the sulfur and oxygen contents between the bituminous and the lower grade sub-bituminous and lignite coals. Since the sulfur is lower, sulfur removal facilities will obviously be lower. The oxygen difference has the direct effect of lowering the oxygen consumption for the Single-Stage Base Case when using a lower grade coal. This is supported by early data[6] using an entrained

flow coal gasifier at Morgantown to gasify a sub-bituminous and bituminous coal. The following results were observed:

(a) For 90 percent carbon conversion, the sub-bituminous coal required about 70 percent of the oxygen that the bituminous coal required;

(b) If the total oxygen available to the reaction were considered (total oxygen=oxygen in gas feed + oxygen in coal feed), then the total oxygen to carbon ratio for 90 percent carbon conversion was identical.

If the relationship expressed in b) above holds true for the Bell HMF Gasifier at 90 percent carbon conversion, then the oxygen to dry coal ratios can be predicted as below:

| | W. Ky. Coal (Base Case) | Montana Sub-Bit. | N. Dakota Lignite |
|---|---|---|---|
| Oxygen in coal per carbon (lb/lb) | 0.13 | 0.21 | 0.29 |
| Oxygen in gas per carbon (lb/lb) | 1.01 | 0.93 | 0.85 |
| Total Oxygen per Carbon (lb/lb) | 1.14 | 1.14 | 1.14 |
| Oxygen Plant Requirement: | | | |
| (Tons $O_2$/Ton Dry Coal) | 0.71 | 0.63 | 0.55 |

In addition to requiring less oxygen from the expensive oxygen plant, the high conversion of the lower rank coals is expected to be easier due to higher reactivities compared to older rank coals. If a N. Dakota lignite is used in place of the W. Kentucky coal in the Base Case Single-Stage gasifier, the relative gas cost is found to be about 0.70 compared to the Base Case with W. Kentucky coal. The main factors contributing to the reduction are as follows:

(a) Substantially less raw material costs: W. Kentucky coal price used was $25/Ton, whereas, N. Dakota Lignite was priced at $5/Ton.

(b) Substantially smaller oxygen plant.

(c) Substantially smaller sulfur plant.

## 6.0 COMPONENTS REQUIRING DEVELOPMENT

The following components are recommended for further development:

1. Control and Safety Systems:

The high throughput rates of the Bell HMF gasifier at high temperatures require the gasifier to be closely controlled. If the reactant coal were to cease flowing and the oxygen continued to flow into the hot reactor, the gasifier and equipment downstream of the gasifier could be exposed to extreme temperatures and pressures in a short period of time. Instrumentation to sense temperature excursions quickly and quick-reacting control systems need to be developed.

In addition, safety systems for automatic shutdowns need to be further developed (Bell has a shutdown system now that reacts to pressure instability).

2. Solids Feed System:

The dense phase feed and lockhopper system need to be integrated. Also the feeding of hot char as a recycle needs to be developed.

3. Slag Pot:

The recovery of the slag in the slag pot will have to be further developed including the depressuring and quenching of the slag. The 1/2-TPH coal test facility in place now is a pot which is quenched with an over abundant quantity of water and at atmospheric pressure.

4. High Temperature Heat Exchangers to Cool Syngas and Char:

The syngas and char from the gasifier will require cooling from either 1900°F to 600°F (Single-Stage) or 1000°F to 600°F (Secondary Injection). The char and possible soot and entrained slag could tend to foul the exchanger surface. Also, the corrosive gases and solids mixture at high temperature will require special metallurgy.

5. Char Fines (or soot) Separation from Syngas:

Scrubbing to remove small char and soot particles will need to be tested to insure efficient removal.

6. Scale-Up Aspects to Commercial Size Design:

The maximum size of the injection element needs to be investigated including the method of clustering several elements into a scaled-up gasifier. Also, the method of solid feed splitting and feed control systems in the scaled design need to be developed.

## 7.0 DEVELOPMENT STATUS

In order to ascertain the current status of the Bell process, the following areas of development are discussed.

(1) Air-Blown Gasifier Development: 1976-1978
(2) Oxygen-Blown Gasifier Development: 1978 to August, 1979
(3) Planned Oxygen-Blown Gasifier Development
(4) Data Base From Test Runs

### 7.1 Air-Blown Gasifier Development:1976-1978.

Work was initiated in 1976 by Bell for E.R.D.A. (now D.O.E.) under contract no. EX-76-C-01-2204 for $1,205,079; D.O.E. continued sponsoring the work through 1978. The scope of Bell's work was to investigate the feasibility of using an entrained flow gasifier, operating at very high mass throughput per unit of reactor volume to economically convert coal into gas. The following pertains to work under this program.

#### 7.1.1 Reactor Test Facility (See Figure III-5)

a) Size:
- 1/2 TPH coal feed
- up to 1 hour run duration

b) Performance Testing:
- o 66 tests @ 1/2 TPH coal flow rate
  - 13 runs @ 1/2 to 1 hour duration
  - 15 atmospheres pressure, air blown, no steam
- o slagging accumulation effects and improved design (impinging sheet injector) identified

- o 3 coals tested - North Dakota Lignite
  - Montana Rosebud Subbituminous
  - Pittsburgh Seam Bituminous
- o stable continued operation observed on tests as evidenced by no reactor upsets
- o 80-90% observed carbon conversion for lignite and subbituminous coal using impinging sheet design; limited testing showed bituminous coal carbon conversion to be approximately 65%
- o pressurized dry coal feed system operated successfully
- o gasifier material balances made based on coal and air flows in and gas compositions out; ungasified organics and ash were not measured but assumed by difference; only gases recorded in balances were $CH_4$, $H_2$, $O_2$, $N_2$, CO and $CO_2$; $H_2O$ was assumed to be converted to $H_2S$.

7.1.2 <u>The following reactor variables were identified and assessed as follows:</u>

(a) <u>Coal Type</u>: Reactor performance as measured by percent carbon conversion as similar in tests for Montana Rosebud and North Dakota Lignite (about 90%); limited data for Pittsburgh Seam Coal indicated substantially lower carbon conversion than obtained with the above two coals (about 65%).

(b) <u>Injector Configuration</u>: Several injector types were tested including a "swirl air injector," a "reverse flow air injector," a "modified reverse flow injector," and an "impinging sheet injector." The main effect of the different injectors was the degree of slag accumulation experienced during a test period in the reactor head.

In this regard, the magnitude of the performance change following slag accumulation was about 12% reduction in carbon conversion and 15% reduction in HHV. (Performance testing with N. Dakota lignite using the impinging sheet injector

indicated minimal slag accumulation and no performance decay over a one hour test period.).

(c) Coal and Air Injection Velocities: Comparison of test runs where the coal injection velocity was reduced by nominally 50% indicated essentially no difference in carbon conversion using the reverse flow injector configuration. Comparison of 2 runs where the air injector was reduced indicated an increase in performance level using the reverse flow injector configuration.

(d) Air to Dry Coal Ratio (lb/lb): Using the impinging sheet injector and N. Dakota lignite, as the ratio is increased from 3.0 to 3.6, the percent carbon gasified increased from 78 to 92% and the HHV of the product gas stayed essentially constant at 100 Btu/SCF (dry).

(e) Residence Time: Air blown test measurements have shown that all of the oxygen has reacted in less than 0.145 sec superficial residence time; at this point, up to 80% of lignite carbon is converted to gas. Doubling the residence time to less than 0.100 sec converts another 10% of the carbon. It is believed that the life-time of active-sites in the ungasified char may be up to 0.200 sec.

(f) Steam/Dry Coal Ratio (lb/lb): The effect of steam addition upon carbon conversion was not assessed; however, it is believed that steam injection would increase the carbon conversion by reacting with the ungasified char at the active sites mentioned above.

(g) Total Mass Flux (lb/hr per $ft^3$ Reactor Volume: A decrease in mass flux from 20,000 to 10,000 showed an increase of around 10% carbon conversion.

(h) Temperature: Reactor temperature varies proportionately to the air/dry coal ratio. The temperature was set in order that the slag formed will flow freely from the gasifier without accumulating.

(i) Pressure: The effect of pressure has not been evaluated using the gasifier test facility.

7.1.3 Theoretical Analyses

- Thermodynamics analyses based on equilibrium calculations were performed.

7.1.4 Process and Economic Analyses

- Process and Economic Analyses were performed by Gilbert Associates under a Bell funded contract on an air-blown HMF gasifier application to a combined cycle power plant.

7.2 Oxygen-Blown Gasifier Development: 1978 to present

Bell continued development of the gasifier using oxygen plus steam rather than air to gasify the coal. The work was performed using company funds. A contract was awarded to Bell by the New York State Energy and Research Development Authority (NYSERDA) for $400,000 in 1979 to conduct dense phase flow and wall-slagging investigations in support of gasifier development. Alfred University has assisted Bell in the area of slag characteristics and chemistry evaluation during this time frame.

A schematic of the oxygen-blown test facility is shown on Figure III-6; a typical gasifier configuration is shown on Figure III-7. Development during this period is as follows:

- Several $O_2$-blown, short duration (less than 10 min.) gasifier tests completed.
- Different basic injector configurations evaluated (see Figure III-7)
- Operation and control of facility and reactor satisfactory
- Data analysis procedures developed

- o Reactor variables identified and assessed as to their influence on carbon conversion. Variables identified are as follows:
  - Oxygen Injection Velocity
  - Steam Injection Velocity
  - Residence Time
  - Oxygen/Coal Operating Ratios
- o Process and economic analysis:
  - (1) Performed by Gilbert Associates under a Bell-funded contract to estimate the cost of a plant to produce 50 billion Btu per day of medium Btu gas (298 Btu/dry SCF) and 18 MW of electricity from North Dakota Lignite.

  - (2) Performed by DOE's Morgantown Process Evaluation Office as a separate process evaluation. The report was entitled "An Economic Comparison of the Bell HMF Gasifier with the Texaco and Lurgi Gasifiers - 50 Billion Btu/day Industrial Fuel Plant." Coal feed was North Dakota Lignite.

7.3 Planned Oxygen-Blown Gasifier Development

In October 1979, DOE and GRI awarded to Bell a one year contract for $1,500,000 (Contract No. DEc-AC01-79ET-14674). The long range objective of the DOE/GRI program is to develop the HMF gasifier to produce SNG feedstock which:

- o Minimizes oxygen and steam consumption
- o Maximizes methane content
- o Minimizes tar and other liquid by-products
- o Eliminates or minimizes char recycle
- o Is scalable to large capacity (100-TPH coal feed)

Specific tasks to be completed in this one year contract are as follows:

1. Investigate the process and determine its performance using an upgraded 1/2-TPH facility (see Figure III-8);

2. Test with bituminous coal, oxygen and steam at 15 atm pressure;

3. Evaluate the primary performance characteristics, and

4. Evaluate the performance of a secondary coal injection system.

The long range program plan is to test at increased pressures, high throughputs and for extended periods of operation. Provisions for this future growth are being made in test system modifications being made under the current DOE/GRI contract. Continuous operation is planned for the 1981-82 time frame.

7.4 Data Base From Test Runs

In Table III-4, selected data from the Bell gasifier testing is listed. Included in the table are selected runs from the air blown gasifier work and yields expected in the oxygen plus steam gasifier.

The most notable result shown in the Air-Blown Test Data is that at the high mass flux rates used (10,000 lb/hr per $ft^3$), 90% carbon conversion for lignite was obtained whereas for Montana Rosebud, only 80% carbon conversion. Both runs used about the same air to dry coal ratios, 3.5 and 3.6, respectively.

During the company sponsored oxygen blown test program, Bell conducted parametric sensitivity testing. It was observed that for each 0.1 change in the oxygen to coal ratio, the carbon conversion efficiency increased approximately 10%. Other variables, including oxygen and steam injection velocities, reactor residence time and coal injector variables were evaluated for their performance sensitivity.

Using Pittsburgh seam coal and operating at an oxygen to coal ratio of 0.85:1, Bell obtained a carbon conversion efficiency of 90%. Applying the performance sensitivity factors and allowing for the lower carbon content, a carbon conversion of 90% at an oxygen to coal ratio of 0.71:1 for Western Kentucky coal is projected by Bell, as indicated in Table III-4.

## 8.0 FUNDAMENTALS OF SRT GASIFICATION AS APPLIED TO THE BELL HMF GASIFIER

The Bell HMF Gasifier has basically two configurations which could be utilized according to the end product desired:

1. The Single-Stage HMF Gasifier configuration where coal, oxygen and steam are fed into the gasifier to react basically to CO and $H_2$. This configuration can apply to any process where syngas can be used as a fuel or as an intermediate product.

2. The Two-Stage HMF Gasifier configuration where a secondary coal stream is injected into the gasifier to mix and interact with the syngas formed in the first stage to form CO, $H_2$, and some $CH_4$. This configuration is applicable where an intermediate Btu fuel gas is desired or where SNG is the final product after a methanation step.

The following is a discussion of the fundamental mechanisms of coal gasification as applied to both configurations:

### 8.1 Single-Stage Gasifier

A schematic of Bell's Single-Stage, entrained flow gasifier is shown in Figure III-9. The gasifier is divided into 3 zones which describe the basic reaction mechanisms of the gasifier as follows:

#### 8.1.1 Zone 1A: Pyrolysis Zone

In this zone, the volatiles from the coal are pyrolyzed by the hot gases surrounding it after injection into the reactor. This region is extremely turbulent with the combustion gases recirculating from zone 1B plus radiation effects supplying the heat for the endothermic pyrolysis reactions. A general reaction can be written as follows:

$$\text{Coal} + \text{heat} \longrightarrow \text{char} + \text{volatiles}$$

where volatiles include CO, $H_2$, $CO_2$, $H_2O$, $CH_4$, $H_2S$, $N_2$, $C_2$-$C_5$ hydrocarbons and $C_6^+$ hydrocarbons containing mostly aromatics, tars and unstable heavy hydrocarbons.

A kinetic equation expressing the rate of pyrolysis as proportional to the amount of volatile content remaining in the char is written as follows:

$$\frac{dV}{dt} = K\,(V_{init.} - V)$$

where $K = K_o \exp(-E/RT)$, $sec^{-1}$ (Arrhenius' equation)

$V_{init.}$ = the initial volatiles in the coal, lb/100 lb coal

and $V$ = volatiles evolved, lb/100 lb coal.

This reaction rate is extremely fast and describes the rate controlling step of devolatilization for pulverized coal particles. If the particles were larger, then the rate of heat transfer to the coal or the mass transfer of the volatiles from the coal would be the limiting step to devolatilization. This is one basic difference between entrained, flash pyrolysis gasifiers and moving, fixed bed, or fluidized bed reactors. The entrained gasifiers can be designed such that heating rates of 2,000°F/sec to 700,000°F/sec are attained by using fine particles to minimize heat and mass transfer resistances.

Pyrolysis of caking coals presents no problem to the Bell HMF gasifier since the particles are well dispersed. Also, since the heating rates are so high, the compounds which "plasticize" coal are quickly pyrolyzed from the coal particle before agglomeration can occur.

### 8.1.2 Zone IB: Volatiles Combustion

This zone is probably indistinguishable from Zone IA as there is backmixing of hot combustion gases which help pyrolyze the coal. If pyrolysis products are available to the oxygen in Zone IA, then volatiles combustion occurs in Zone IA as well as Zone IB since the reaction rate of oxygen with volatiles such as CO and $H_2$ is fast enough to be considered instantaneous.

The volatiles combustion reactions can be written as follows:

$$H_2 + 1/2\ O_2 \longrightarrow H_2O$$

$$CO + 1/2\ O_2 \longrightarrow CO_2$$

$$\text{other volatiles} + O_2 \longrightarrow CO_2 + CO + H_2 + H_2O.$$

The additional volatiles, including $CH_4$, $C_2$-$C_5$, and $C_{6+}$ hydrocarbons will partially be oxidized to $CO_2$, CO, and $H_2$, depending on the availability of the oxygen and the temperature level. Since tests in the 1/2-TPH facility have shown little or no evidence of tars or heavy liquids in the gasifier product, it is probable that the tars are completely destroyed in this zone.

The temperatures reached in this zone are around 3000°F and are directly proportional to the oxygen to coal ratio.

### 8.1.3 Zone IC: Char Gasification

The pyrolysis reactions in Zone IA leave a char intermediate product entering Zone IB. The char does recirculate with hot, pyrolysis products from Zone IB back to Zone IA. This is evidenced by the accumulation of a thin, slag rim which accumulates around the oxygen inlet annulus as shown in Figure III-9. The unreacted, but now highly reactive char enters Zone IC where steam is injected to further gasify the char. Air-blown testing by Bell showed that essentially all of the oxygen was consumed in 0.045 msec; hence, since all of the oxygen has been reacted before Zone IC, the heterogeneous reaction of char with oxygen is not likely. The primary reactions in this zone are as follows:

$$C(\text{Char}) + H_2O \longrightarrow CO + H_2$$

$$C(\text{Char}) + CO_2 \longrightarrow 2CO$$

$$C(\text{Char}) + H_2 \longrightarrow CH_4$$

The overall reaction rate of the char can be described as follows:

$$\frac{dC_s}{dt} = -C_s \left(k_{H_2O}\, C_{H_2O} + k_{CO_2}\, C_{CO_2} + k_{H_2}\, C_{H_2}\right)$$

where $C_s$ = concentration of carbon in char (moles/volume)

$k_{H_2O}, k_{CO_2}, k_{H_2}$ = Arrhenius rate constants for char $H_2O$, char-$CO_2$, and char-$H_2$ reactions (vol/moles/sec)

$C_{H_2O}, C_{CO_2}, C_{H_2}$ = concentration of gaseous species (moles/volume)

The initial reaction rates of the three heterogeneous reactions above have been shown to be about the same at partial pressures of 35 atm[2]; however, at 1 atm partial pressure, the fastest reaction is suggested to be the char-$CO_2$ reaction, then the char-$H_2O$ reaction and finally the char-$H_2$ reaction. An analysis of the stoichiometric quantities of the gases entering Zone IC indicates that $H_2$ has probably the lowest partial pressure of the reacting gaseous species. Hence, the most dominant heterogeneous reactions in Zone IC are the char-$CO_2$ and char-$H_2O$ reactions.

As the heterogeneous reactions are occurring, the gas phase reactions are simultaneously reacting to approach equilibrium composition. For the high temperatures (2500-2600°F) of the Bell Single-Stage Reactor, there is hardly any $CH_4$ existing and CO and $H_2$ make up close to 90 vol % of the gaseous species. The equilibrium gas composition of the Single-Stage Raw Syngas is given as follows:

| | Vol.% |
|---|---|
| CO | 55.9 |
| $H_2$ | 31.0 |
| $H_2O$ | 7.0 |
| $CO_2$ | 4.0 |
| $H_2S$ | 1.4 |
| $N_2$ | 0.7 |
| $CH_4$ | 0.01 |

All the heavy volatiles have disappeared through gas phase reactions occurring in Zones IA, IB, and IC. In the cracking reactions which do occur, pyrolytic soot may be formed which could represent a penalty to the process as soot is so fine it is hard to recover.

## 8.2 Two-Stage Gasifier

Bell's Two-Stage, entrained flow gasifier includes all the elements of the Single-Stage gasifier with a secondary-injection Zone IIA and secondary char gasification Zone IIB added as shown in Figure III-9. The coal is injected in Zone IIA in order to devolatilize the coal quickly as occurs in Zone IA of the Single-Stage. However, heat for pyrolysis is supplied by the 2500°F gases from Zone IC rather than combustion gases recirculating from Zone IB. The devolatilized char formed from the secondary coal is very reactive at this point as it enters Zone IIB. The main reactions available are the char-$H_2O$, char-$CO_2$, and the char-$H_2$ reactions as described above. However, in this section the reaction that will prevail initially is the char-$H_2$ reaction since the $H_2$ partial pressure is the highest. Hence, methane yields are enhanced from pyrolysis and the char-$H_2$ reactions. Since the temperatures are still high, the gas-phase equilibrium would show little methane in the gasifier product if equilibrium were attained. Hence, rapid quenching by water sprays is done immediately following Zone IIB to "freeze" the methane before it decomposes.

## 9.0 REFERENCES


1. Coates, R. L., "Kinetic Data for a High Temperature Entrained Flow Gasifier," ACS, Division of Fuel Chemistry, preprints, 22 (1), 84-92 (March 1977).

2. Wen, C. Y. and Dutta, S., "Rates of Coal Pyrolysis and Gasification Reactions," Coal Conversion Technology, Wen, C. Y. and Lee, E. S. (Editors), Addison-Wesley Publishing Co., Inc. (1979).

3. Mentser, M., et al., "Devolatilization of Coal by Rapid Heating," Coal Gasification, Adv. in Chem. Serv., 131, p. 1-8, Amer. Chem. Soc., Washington, D.C. (1974).

4. McIntosh, M. J. and Coates, R. L., "Experimental and Process Design Study of a High Rate Entrained Coal Gasification Process," Final Report, performed by the Eyring Research Institute for DOE under Contract No. EX-76-01-1548, 1979.

5. Manthos, G. J., et al., "Evaluation of a High-Pressure Saarberg/Otto Gasifier." performed by Pervin and Gerty, Inc. for ERDA under Contract No. EX-76-C-01-2024, January 1977.

6. Bissett, L.A., "An Engineering Assessment of Entrainment Gasification," published by the U. S. Department of Energy, MERC/RI-78/2 (April 1978).

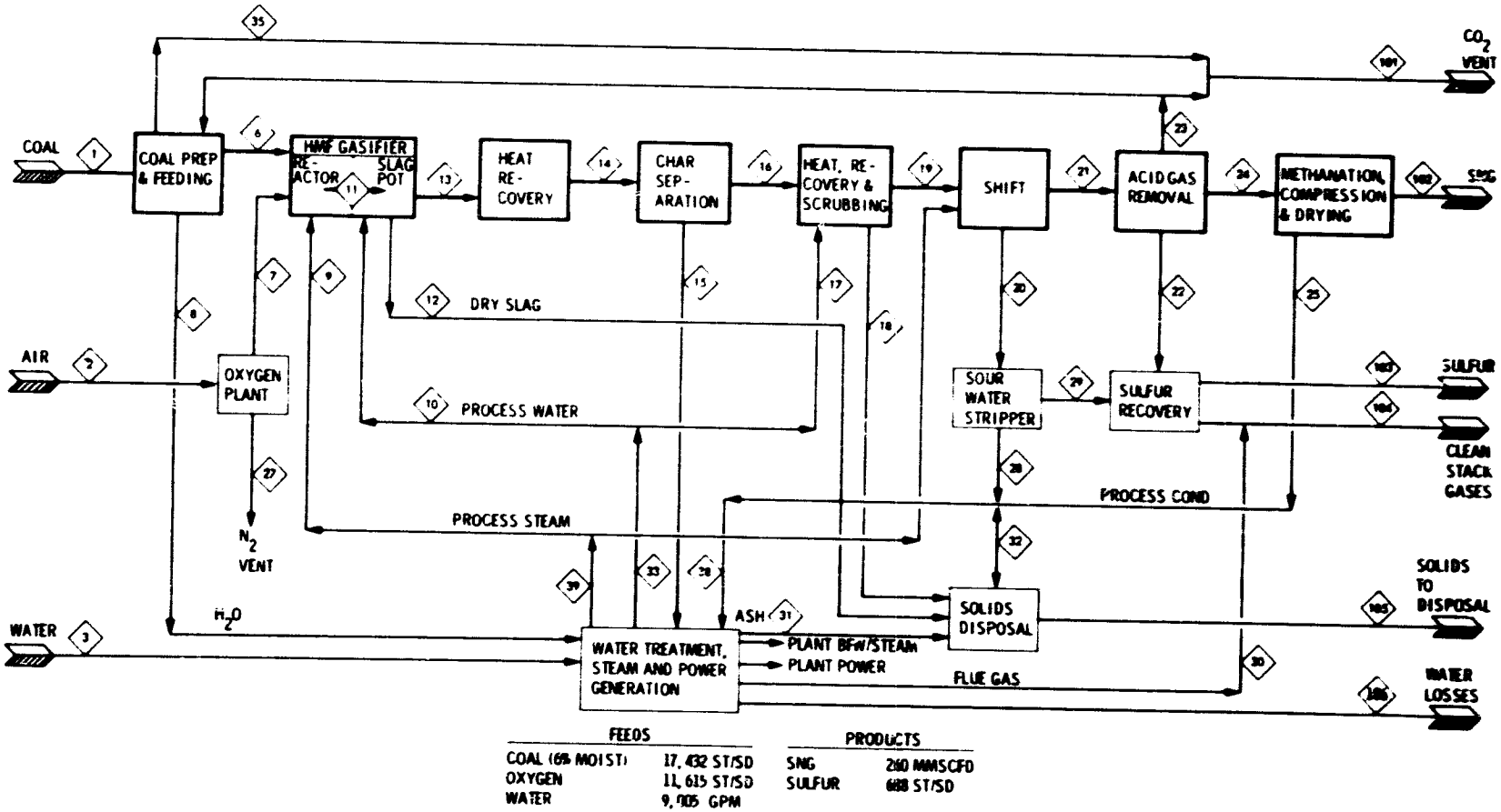


Fig. III-1: Bell Single Stage HMF Coal-to-SNG Block Flow Diagram

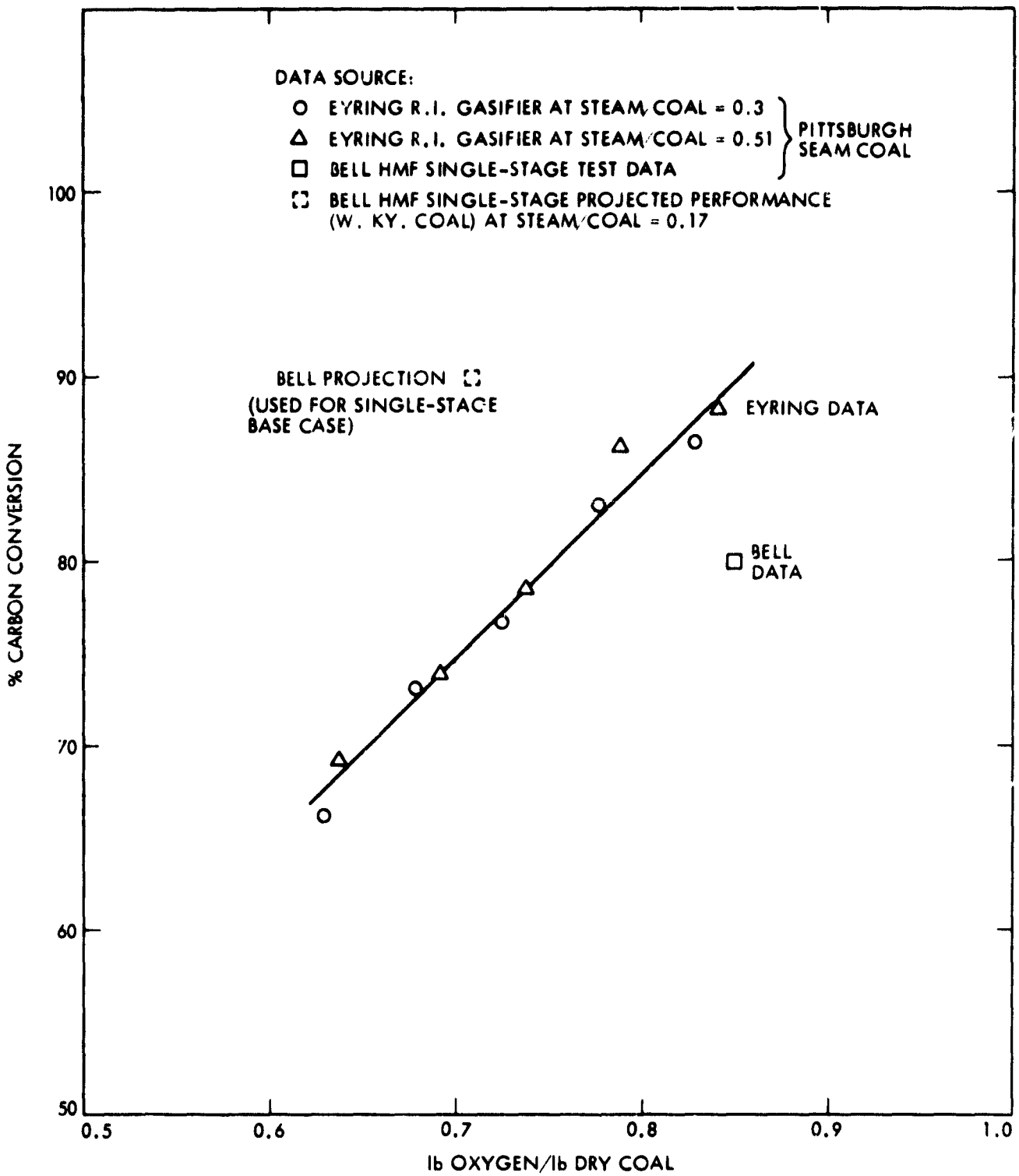


Fig. III-2: % Carbon Conversion vs. Oxygen/Coal Ratio for Bituminous Coal

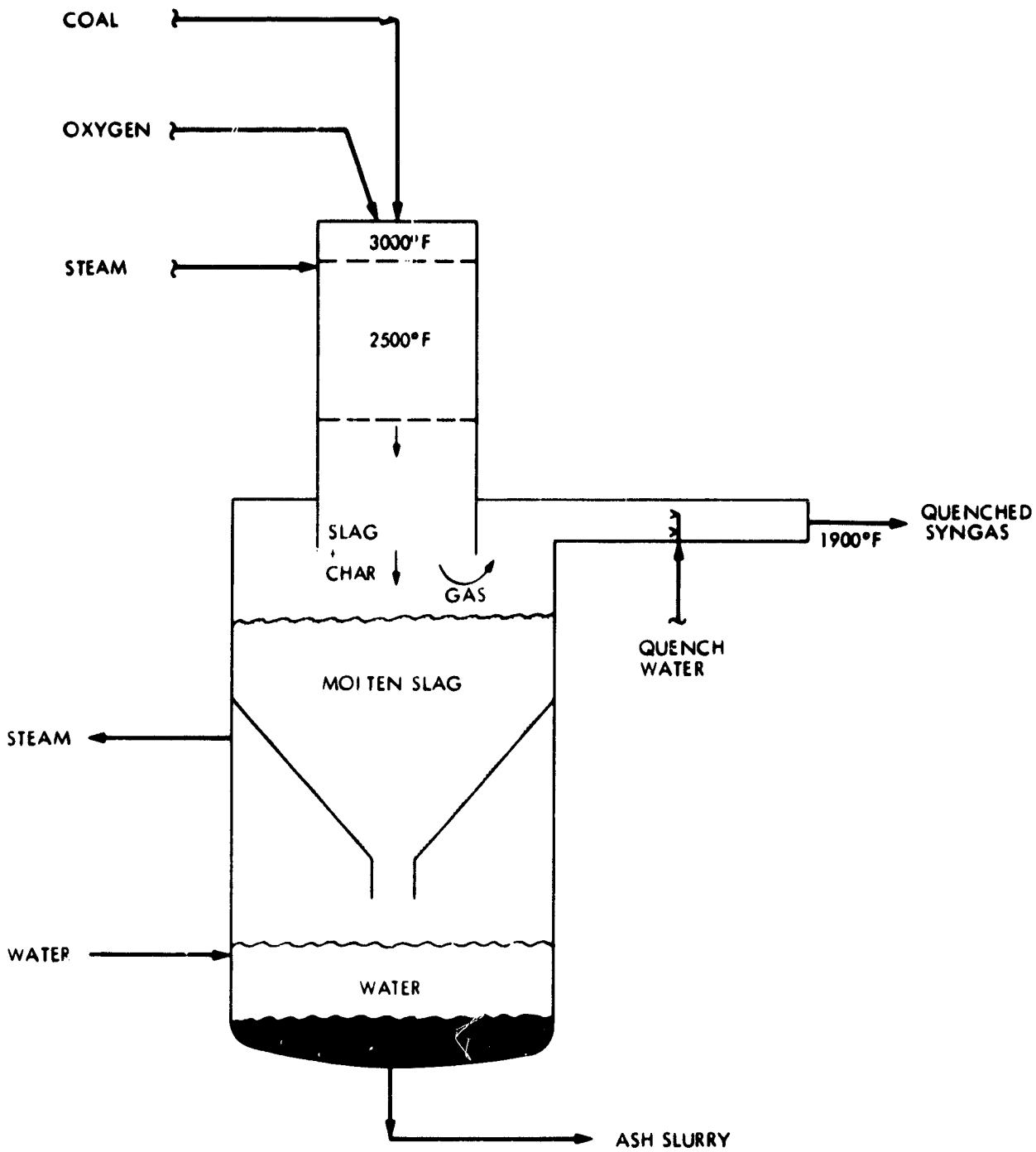


BENEFICIAL FEATURES

- UNGASIFIED CHAR FROM REACTION ZONE IMPINGES ON SURFACE OF SLAG POOL WHICH COULD ACT AS AN OXYGEN TRANSFER AGENT
- UNGASIFIED CHAR REACTION ZONE IS AT HIGH TEMPERATURE FOR A LONGER TIME

Fig. III-3: Molten-Slag Bath Concept for Bell's Single-Stage HMF Gasifier

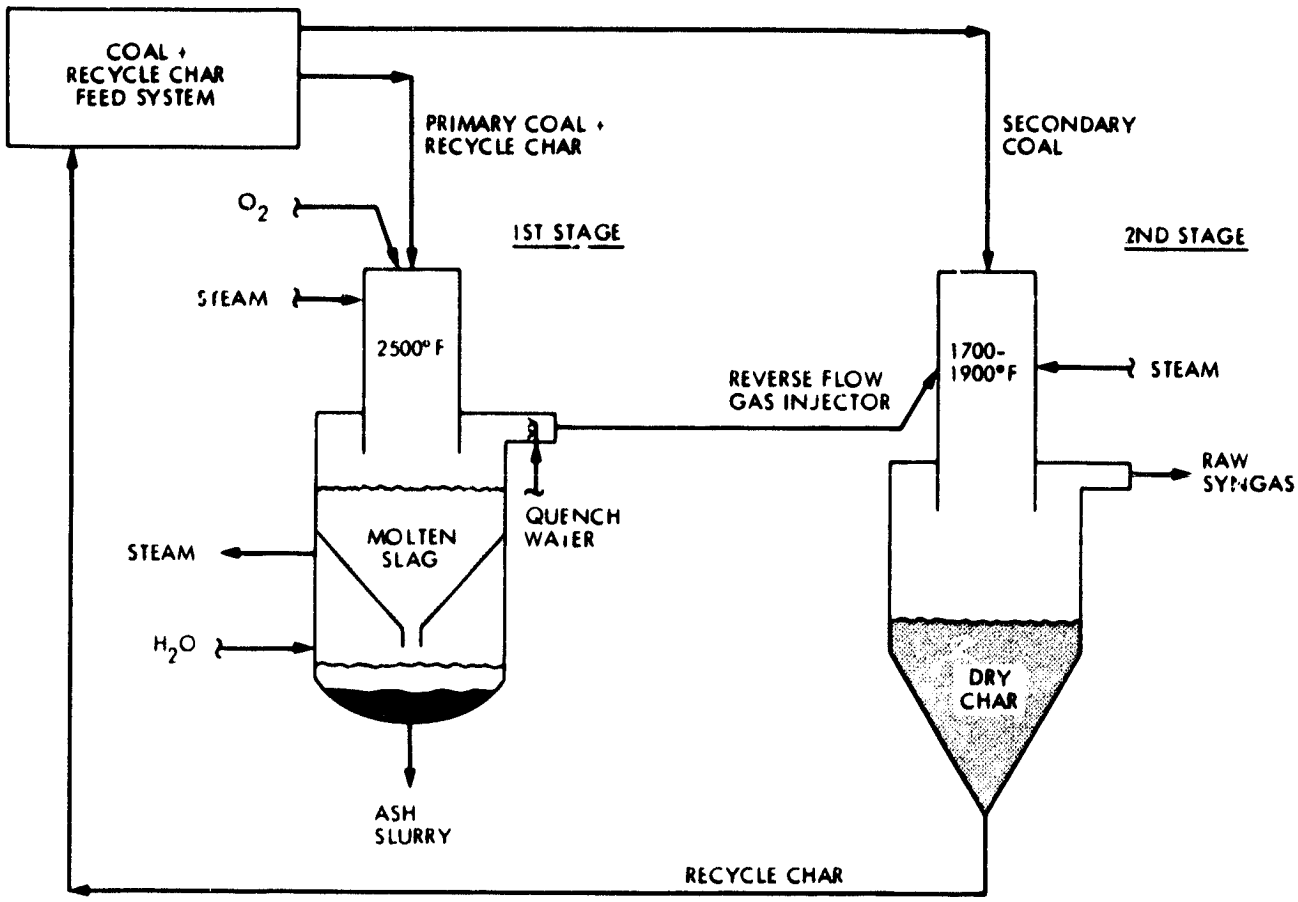


BENEFICIAL FEATURES

- TWO-STAGE PROCESS WITH HIGHER METHANE YIELD AND LOWER $O_2$ CONSUMPTION
- HIGH SINGLE-PASS CARBON CONVERSION MINIMIZES CHAR RECYCLING
- MOLTEN SLAG KEPT SEPARATE FROM SECONDARY COAL TO PREVENT AGGLOMERATION
- HOT GASES FROM 1ST STAGE INJECTED INTO 2ND STAGE UTILIZING EFFICIENT REVERSE FLOW INJECTOR TO MIX THOROUGHLY WITH SECONDARY COAL
- INTERRUPTION OF CHAR FLOW DOESN'T SHUT SYSTEM DOWN

Fig. III-4: Molten-Slag Bath with Secondary Injection for Bell's HMF Gasifier

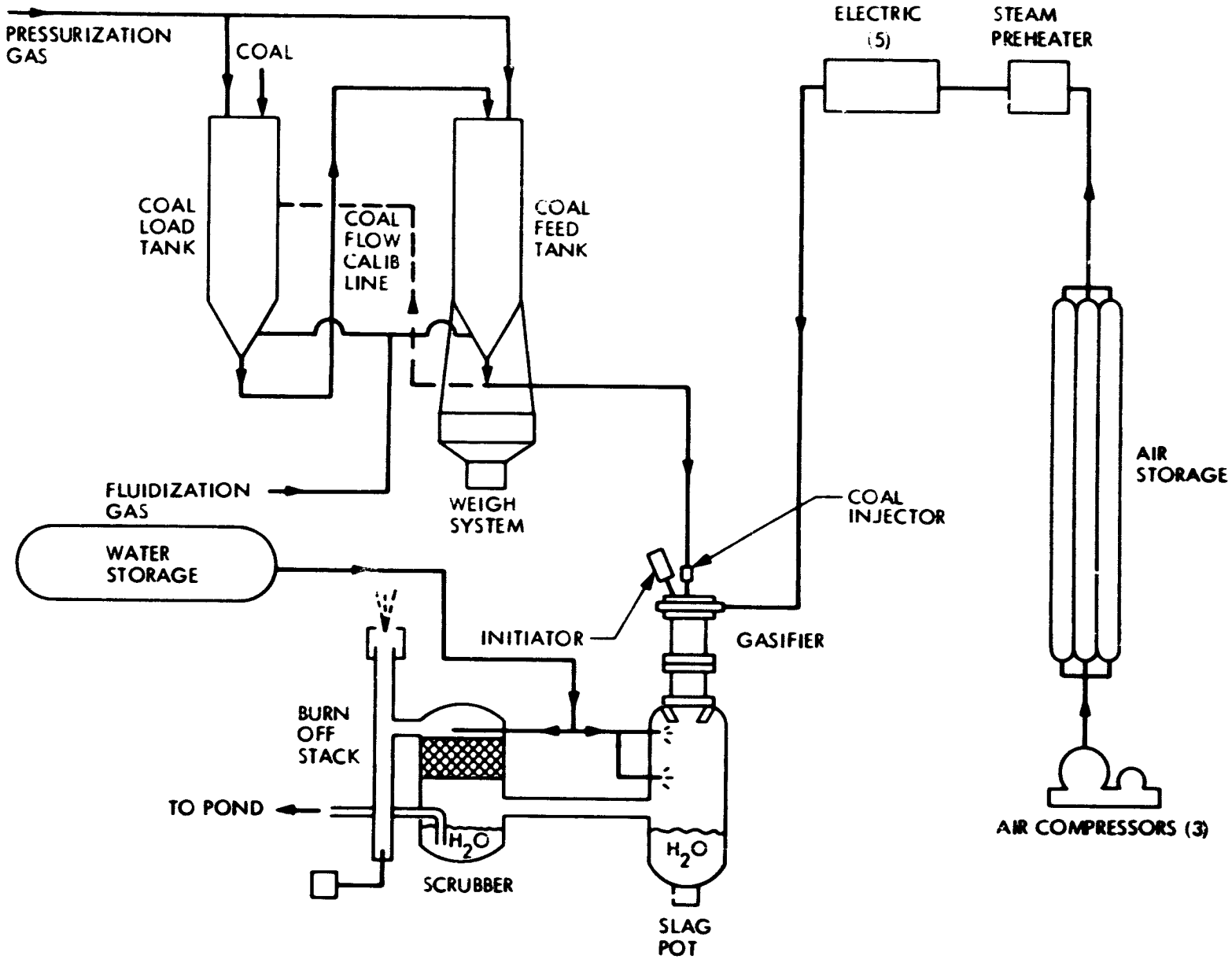


Fig. III-5: Air-Blown Bell HMF Gasifier Test Facility Schematic

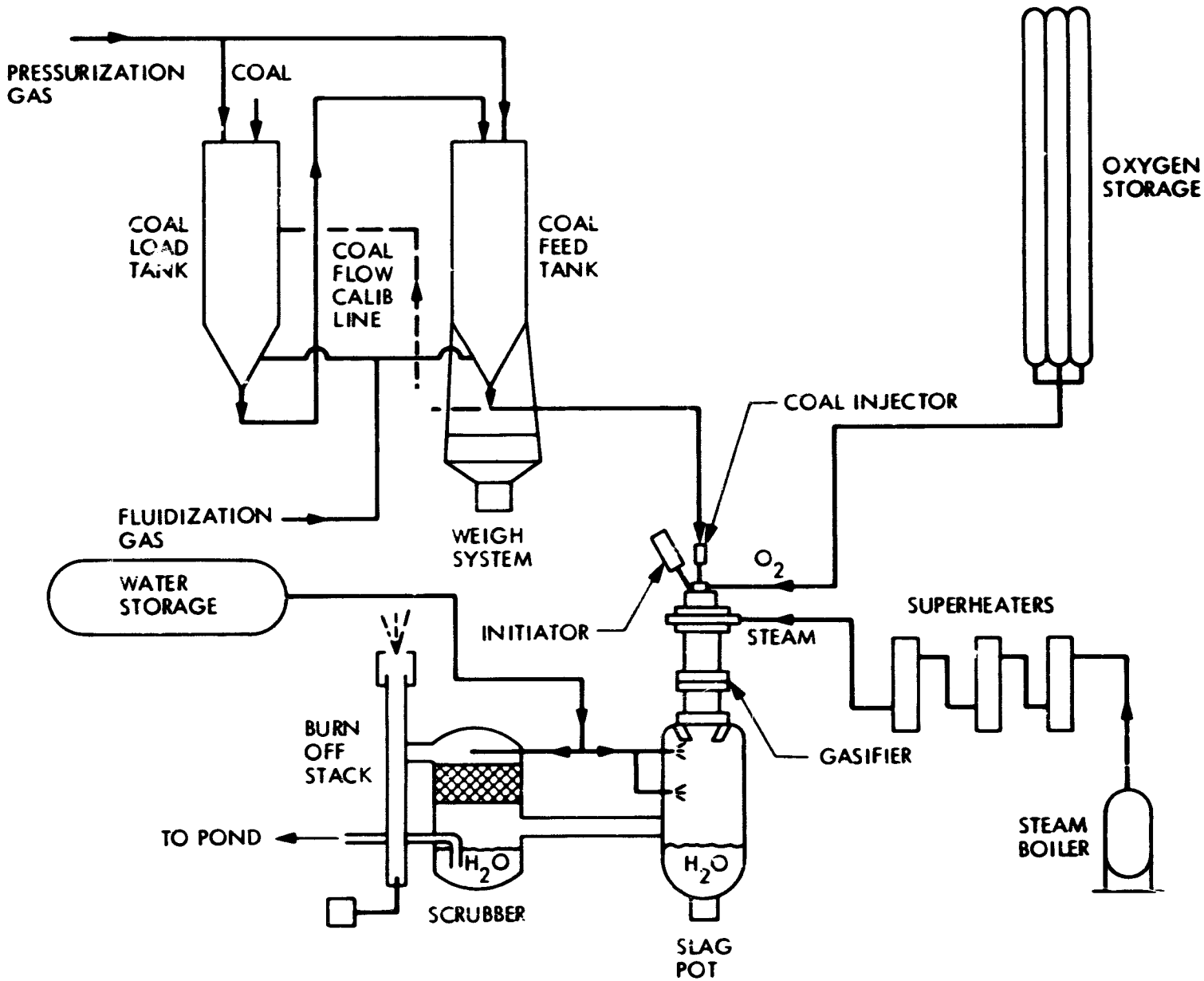


Fig. III-6: Oxygen-Blown Bell HMF Gasifier Test Facility Schematic

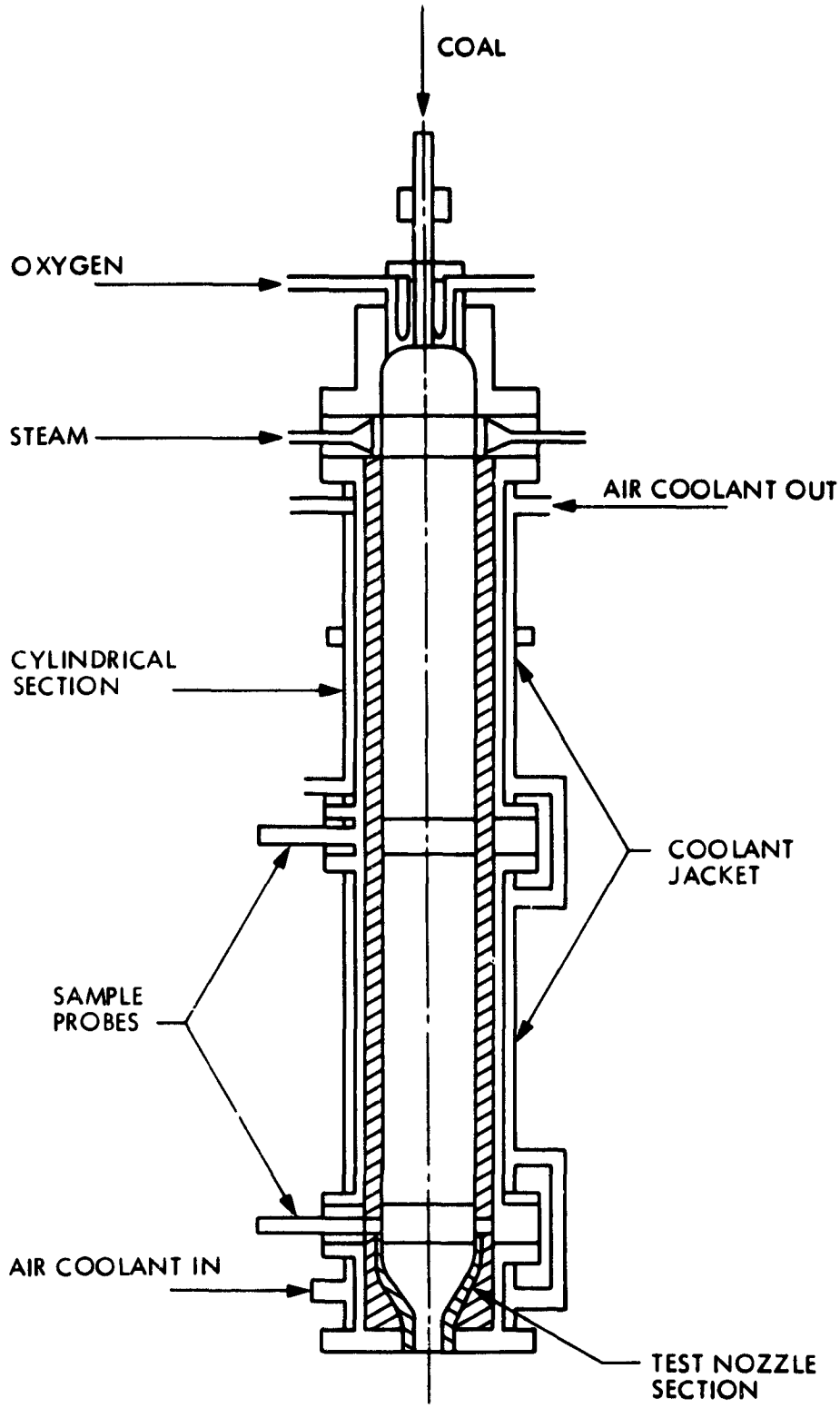


Fig. III-7: Typical Reactor Configuration Used in Bell HMF Oxygen-Blown Testing

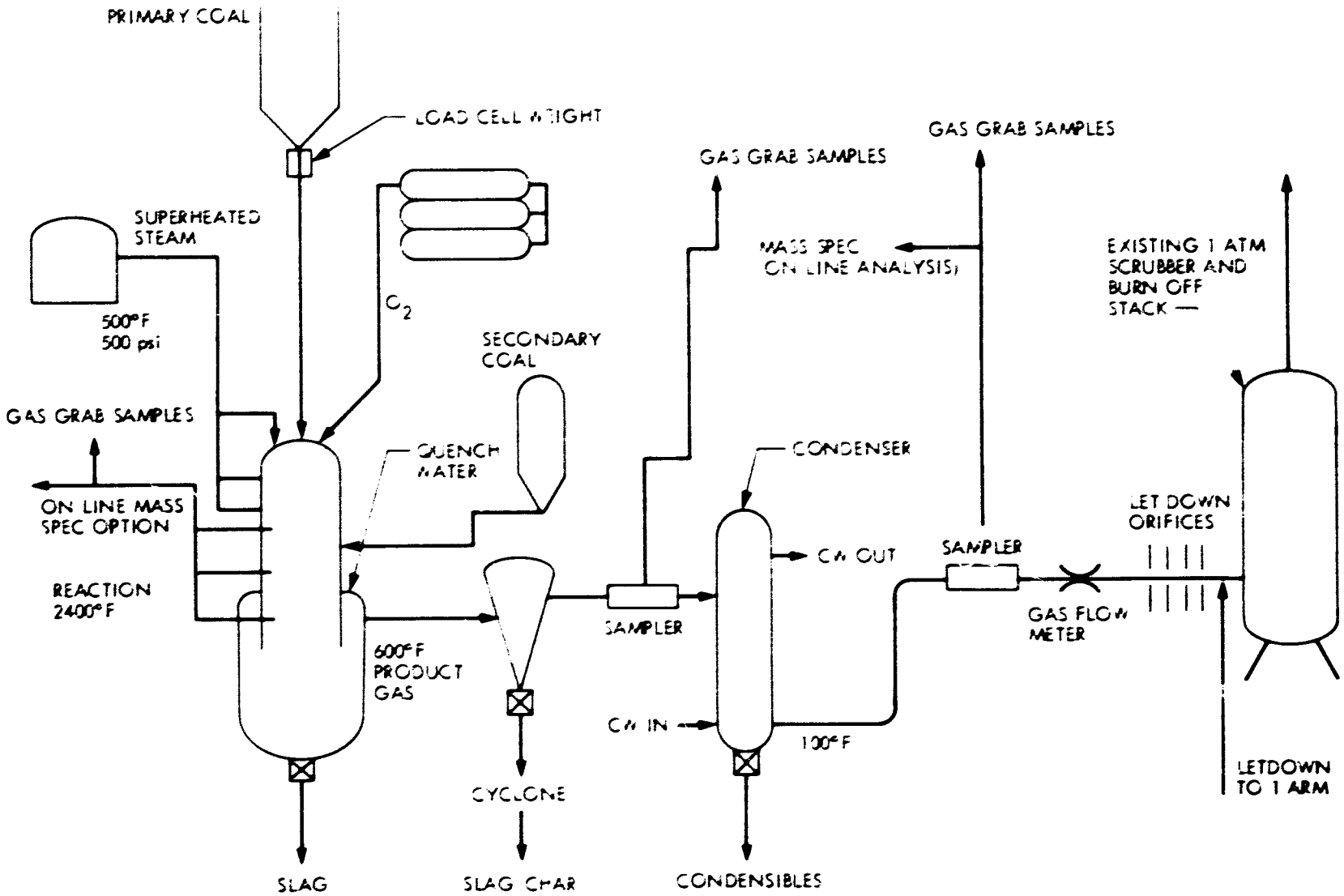


Fig. III-8: Upgraded Bell HMF Test Facility Schematic for Oxygen-Blown Reactor Program

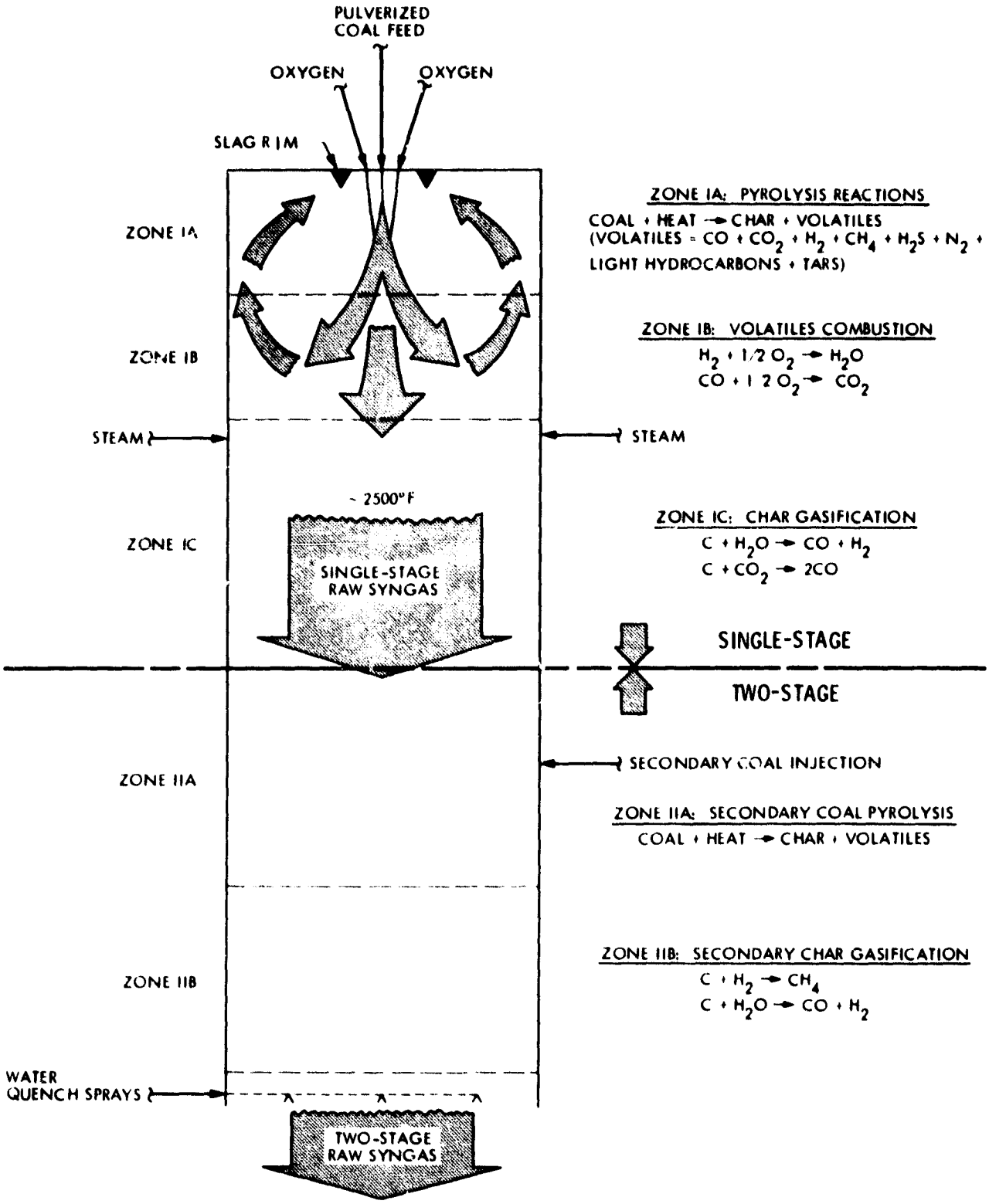


Figure III-9. Schematic of Reaction Fundamentals of Bell's Single-Stage and Secondary Injection HMF Gasifier.

## Table III-1: Material Balance for Bell Single-Stage HMF Coal-to-SNG Process

| STREAM NO | 1 | 6 | 7 | 9 | 11 | 13 | 14 | 15 | 16 | 19 | 21 | 24 | 102 | 103 | 105 |
|---|---|---|---|---|---|---|---|---|---|---|---|---|---|---|---|
| STREAM NAME | COAL FROM MINE | DENSE PHASE COAL FEED | $O_2$ TO GASIF | PROCESS STEAM TO GASIF | REACTOR SYNGAS | RAW HOT SYNGAS | RAW COOLED SYNGAS | CHAR TO BOILERS | SYNGAS FROM CYCLONE | DUST-FREE SYNGAS | SHIFTED SYNGAS | CLEAN SYNGAS | SNG TO PIPELINE | SULFUR | SOLIDS TO DISPOSAL |
| COMPONENTS lb-mol/hr | | | | | | | | | | | | | | | |
| CO | - | - | | - | 70,047 | 70,047 | 70,047 | - | 70,047 | 70,047 | 27,167 | 27,167 | - | - | - |
| $CO_2$ | - | 2,948 | - | - | 5,032 | 5,032 | 5,032 | - | 5,032 | 5,032 | 47,912 | 570 | 570 | - | - |
| $H_2$ | - | - | - | - | 38,631 | 38,631 | 38,631 | - | 38,631 | 38,631 | 81,511 | 81,511 | 10 | - | - |
| $CH_4$ | - | - | - | - | 15 | 15 | 15 | - | 15 | 15 | 15 | 15 | 27,182 | - | - |
| $C_2H_6$ | - | - | - | - | - | - | - | - | - | - | - | - | - | - | - |
| $C_6H_6$ (OR BTX) | - | - | - | - | - | - | - | - | | - | - | - | - | - | - |
| $H_2S$ | - | - | - | - | 1,789 | 1,789 | 1,789 | - | 1,789 | 1,789 | 1,787 | - | - | - | - |
| COS | - | - | - | - | - | - | - | - | - | - | - | - | - | - | - |
| $SO_2$ | - | | - | - | - | - | | - | - | - | - | - | - | - | - |
| $NH_3$ | - | - | - | - | TR | TR | R | - | TR | TR | - | - | - | - | - |
| $N_2$ | - | - | 147 | - | 830 | 830 | 830 | - | 830 | 830 | 830 | 830 | 830 | - | - |
| $O_2$ | - | - | 30,120 | - | - | - | - | - | - | - | - | - | - | - | - |
| SUBTOTAL-DRY | - | 2,948 | 30,267 | - | 116,344 | 116,344 | 116,344 | - | 116,344 | 116,344 | 159,222 | 110,093 | 28,592 | - | - |
| $H_2O$ | 4,838 | 1,523 | - | 13,217 | 8,702 | 28,208 | 28,208 | - | 28,208 | 41,936 | 324 | 5 | 5 | - | 3,083 |
| TOTAL GAS + LIQUIDS, lb-mol/hr | 4,838 | 4,471 | 30,267 | 13,217 | 125,046 | 144,552 | 144,552 | - | 144,552 | 158,280 | 159,546 | 110,098 | 28,597 | - | 3,083 |
| lbs/hr | 87,162 | 157,180 | 967,958 | 238,124 | 2,502,586 | 2,854,006 | 2,854,006 | - | 2,854,006 | 3,101,330 | 3,124,106 | 973,944 | 484,503 | - | 55,543 |
| SOLIDS, lbs/hr | | | | | | | | | | | | | | | |
| MAF (COAL, CHAR, SULFUR) | 1,235,920 | 1,235,920 | - | - | 96,596 | 96,596 | 96,596 | 96,596 | | - | - | - | - | 57,355 | - |
| ASH (MINERAL MATTER) | 129,618 | 129,618 | - | - | 129,618 | 12,972 | 12,972 | 12,429 | 543 | - | - | - | - | - | 129,618 |
| TOTAL SOLIDS, lbs/hr | 1,365,538 | 1,365,538 | - | - | 226,214 | 109,568 | 109,568 | 109,025 | 543 | - | - | - | - | 57,355 | 129,618 |
| TOTAL (GAS, LIQ + SOL) lbs/hr | 1,452,700 | 1,522,718 | 967,958 | 238,124 | 2,728,800 | 2,963,574 | 2,963,574 | 109,025 | 2,854,549 | 3,101,330 | 3,124,106 | 973,944 | 484,503 | 57,355 | 185,161 |
| MMSCFD - GAS | - | - | 275.67 | 120.38 | 1,138.92 | 1,316.58 | 1,316.58 | - | 1,316.58 | 1,441.61 | 1,453.14 | 1,002.77 | 260.46 | - | - |
| MOLE WEIGHT - GAS | - | - | 31.98 | 18.02 | 20.01 | 19.74 | 19.74 | - | 19.74 | 19.59 | 19.58 | 8.85 | 16.94 | - | - |
| TEMPERATURE, °F | 77 | 77 | 77 | 530 | 2530 | 1900 | 600 | 600 | 600 | 345 | 100 | 100 | 100 | 280 | - |
| PRESSURE, psia | 14.7 | 600 | 600 | 600 | 500 | 498 | 494 | 488 | 488 | 470 | 450 | 430 | 1000 | 147 | - |

TABLE III-2: Effect of Potential Improvements of the Bell HMF Gasifier to be Investigated by Bell.

| Case No. | 1 | 2 | 3 | 4 |
|---|---|---|---|---|
| Description | Single Stage (Base Case) | Single-Stage + Char Recycle | Secondary Injection | Secondary Injection + Char Recycle |
| % Carbon Conversion | 90% | 90% | Information is proprietary at this time | |
| % Carbon Utilization | 100% | 100% | same as above | |
| $O_2$ to Dry Coal Weight Ratio | 0.71 | Proprietary | same as above | |
| Flue Gas Desulfurization Required | NO | YES | same as above | |
| Relative Gas Cost | 1.0 | 1.01 | 0.92 | 0.91 |
| Relative Capital Cost | 1.0 | 1.03 | 0.87 | 0.89 |
| Relative Operating Cost | 1.0 | 1.0 | 0.95 | 0.93 |

TABLE III-3: Base Case Gas Cost Sensitivity to Critical Assumptions

| Alternate Description | CRITICAL ASSUMPTIONS | | | Relative Gas Cost |
|---|---|---|---|---|
| | % Carbon Converstion @ $O_2$/Coal Ratio | Ungasified Carbon is Recovered as Char for Boiler Fuel | Char is Sulfur Free | |
| o Base Case | 90% @ 0.71 | YES | YES | 1.0 |
| o Base Case with present conversion data | 80% @ 0.85 | YES | YES | 1.16 |
| o Base Case with char discarded | 90% @ 0.71 | NO | YES | 1.06 |
| o Base Case with sulfur in char | 90% @ 0.71 | YES | NO (requiring FGD Unit) | 1.02 |

## Table III-4: Bell-HMF Gasifier Data

| | SELECTED TEST DATA | | | PROJECTED YIELDS BASED ON OBSERVED TRENDS |
|---|---|---|---|---|
| | AIR BLOWN DATA | | $O_2$ BLOWN | |
| COAL: | N. DAKOTA LIGNITE | MONTANA ROSEBUD | PITTSBURGH SEAM | W. KENT. |
| INJECTOR CONFIGURATION: | IMPING SHEET | IMPING SHEET | | IMPING SHEET |
| RUN No.: | 3106 | 3110 | | - |
| REACTOR PRESSURE (psia): | 218 | 186 | NOTE (1) | 500 |
| REACTOR TEMPERATURE (°F): | ~2400 | ~2600 | DATA IS PROPRIETARY AT THIS TIME | 2500 |
| RUN DURATION (min): | 30 | 60 | | - |
| AIR/DRY COAL AVG (lb/lb): | 3.5 | 3.6 | | NONE |
| OXYGEN/DRY COAL (lb/lb): | - | - | | 0.71 |
| STEAM/DRY COAL (lb/lb): | - | - | | 0.20 |
| AVG REACTOR MASS FLUX (lb/hr/ft$^3$): | 10,400 | 10,300 | | ≈5,000 |
| SUPERFICIAL GAS RES. TIME (ms): | 80 | 80 | | 350 |
| AVG GASIFIER EFFLUENT GAS COMPOSITION (VOLUME PERCENT) NOTE (2) | | | | |
| $CH_4$ | 0.1 | 0.2 | | 0.01 |
| $H_2$ | 8.1 | 6.8 | | 30.90 |
| $N_2$ | 61.4 | 64.0 | | 0.66 |
| CO | 22.0 | 20.0 | | 56.02 |
| $CO_2$ | 8.6 | 8.9 | | 4.02 NOTE (3) |
| $H_2O$ | NOT ANALYZED | NOT ANALYZED | | 6.96 |
| $H_2S$ | NOT ANALYZED | NOT ANALYZED | | 1.43 |
| COS | NOT ANALYZED | NOT ANALYZED | | - |
| $NH_3$ | TR | TR | | - |
| AVG CARBON CONVERSION: (% OF CARBON IN COAL IN GAS PHASE) | 90 | 80 | | 90 |
| AVG COLD GAS EFFICIENCY: $100\% \times \left(\frac{\text{HHV OF CO, } H_2 + CH_4 \text{ IN EFFL GAS}}{\text{HHV OF COAL FEED}}\right)$ | 55 | 45 | | 78 |
| AVG GAS HHV (BTU/DRY SCF): | 98 | 88 | | 301 |
| UNGASIFIED CARBON, ASH AND SLAG | | | | |
| % UNGASIFIED CARBON TO CHAR: | 10% | 20% | | 10% |
| % ASH IN COAL RECOVERED IN SLAG TANK: | NOT ANALYZED | NOT ANALYZED | | 90% |
| % ASH IN COAL RECOVERED IN CHAR: | NOT ANALYZED | NOT ANALYZED | | 10% |
| CHAR ANALYSES (WT %) | | | | |
| ASH: | NOT ANALYZED | NOT ANALYZED | | 11% |
| CARBON: | | | | 89% |

NOTES:

(1) Data not available on Pittsburgh seam tests

(2) Gas compositions averaged from several samples during test with $CH_4$, $H_2$, $N_2$, CO, and $CO_2$ only gases analyzed

(3) Includes 2.31% $CO_2$ as pressurizing gas in coal feed

# SECTION IV
# CS/R HYDROGASIFICATION PROCESS

## SECTION IV

## ASSESSMENT OF CS/R HYDROGASIFICATION PROCESS

### 1.0 SUMMARY

The assessed process is a corceptual complex by Rockwell which integrates the Rockwell SRT Hydrogasifier with other more conventional units to produce an SNG product at a rate of 250 billion Btu/day and a co-product of benzene at 448 T/D.

Meetings and discussions with the developer were conducted to gather data on the status of development, test results, conceptual block flow diagram and material balances. From these several process strengths/weaknesses, potential improvements, required component development, critical questions and recommendations for further activity were derived.

The Rockwell material balance is keyed to a ratio of 0.2 lbs $H_2$/lb M.F. coal fed to the hydrogasifier, a carbon conversion of 5.3% to benzene, 45% to methane and 45% unconverted char. Although the balance around the hydrogasifier is based upon considerable tests results, the overall plant material balance is strongly influenced by factored estimates for other units without the benefit of a detailed design. This is especially true in areas such as utility plants and oxygasification which are wholly or partially fed by coal. As a result the overall cold gas thermal efficiency of 58% should be viewed as an early estimate, and this may increase significantly when the complex is optimized.

Critical areas in question as the overall process is now conceived are the $H_2$/Coal feed ratio, final process selected for $H_2$ production, the degree of co-product benzene production as it affects the final economics, addressing scale-up designs for commercial level, realistic expectations of operating factors and turn down.

The $H_2$ production process is yet to be selected ranging from candidates such as Texaco's partial oxidation process to an SRT dry fed char oxygasifier yet to be developed.

The strengths of the CS/R process as proposed appear to be high carbon conversion to $CH_4$ in the gasifier, accepting broad range of feeds, the option of a valuable co-product with no tars and high throughput. A large $H_2$ recycle system and oxygen plant might be considered as the principal weaknesses.

Some potential improvements suggested as a result of this assessment are: optimized benzene coproduct option; a more economical $H_2$ separation process; use of catalyst, and reduced $H_2$/Coal ratio.

Several components or elements which we envision to be important and required for the final commercial development are dense phase lockhopper feed systems, control/safety systems, hot solids flow measurement and control, hot solids-in-gas heat exchange, dry hot char separation and feeding and integrating gasifier units.

Following are further descriptions of the subjects summarized above.

## 2.0 CURRENT STATUS OF DEVELOPMENT

### 2.1 Program Background Chronology

Rockwell originally made a proposal to the Office of Coal Research (OCR) in 1974 which resulted in a coal liquefaction contract starting in 1975. In 1976 the dense phase coal feed system was demonstrated and a 1/4-TPH and a 1-TPH liquefaction reactor testing was started. In 1977 the coal gasification program was started along with a 1-TPH coal liquefaction PDU. In 1978 long duration gasification tests were started and a 4-TPH gasification program initiated. In 1979 the 4-TPH gasification program was redirected by DOE replacing the 4-TPH hydrogasifier reactor development facility with a 3/4-TPH integrated process development unit (IPDU).

### 2.2 Hydroliquefaction Program

This program was conducted under Contract No. EX-76-C-01-2044 (DOE) for $4,250,000. The period of performance was originally 49 months extending from August 1975 to September 1979 but was extended through February 1980. A three-year follow-on program is currently planned. The objectives are:

- Demonstrate Dense Phase Feeding
- Demonstrate Injector Mixing
- 1-TPH Engineering Scale Tests
- Construct/Operate a 1-TPH PDU to establish quantity and quality of liquid yields.

2.5 High Btu Hydrogasification Programs

The first contract, EX-77-C-01-2518 (DOE), for $1,500,000 from February 1977 to August 1978 (17 months) had the objectives of:

- Bench scale testing at Cities Service R & D Company
- 1/4-TPH engineering scale tests
- Preliminary process analysis

The second on-going contract, EX-78-C-01-3125 (DOE) for $22,000,000 from September 1978 to June 1982 (42 months) has for an overall objective the further development of the Rockwell single-stage short-residence-time hydrogasifier to demonstration plant status. Special objectives are to:

- Design, construct, and operate a 3/4-TPH coal feed rate integrated process development unit; demonstrate same in a 30-day test (continuous operation).

- Develop process data and operating experience to support design, economic evaluation, and optimization of a viable commercial process.

- Prepare a preliminary design of a practical commercial plant.

The program scope of work involves an integrated combination of design, construction, and operation to demonstrate the feasibility of the Rockwell hydrogasifier reactor for commercial application.

Testing is currently being performed at 3/4-TPH in a short- duration engineering-scale facility to improve and refine the process data base by generating essential information outside the scope of the previous contract.

Process conditions are being directed towards optimum benzene production as a co-product with SNG.

It was initially planned that a 4-TPH unit be developed and used to make extended runs for various durations up to 30 days. However, in August 1979, DOE decided to redirect the program, replacing the 4-TPH hydrogasifier reactor development facility with a 3/4-TPH integrated process development unit (IPDU). Lengthy tests will be performed to demonstrate system operability, component durability and product quality, while shorter runs will be conducted to evaluate process factors. It will no longer be possible to investigate injection element scaling, as was originally planned, by studying single-element and clustered multiple-element injectors.

Tests will be made with strongly caking bituminous coal as well as with subbituminous coal; char from each will be characterized. Problems with the process, materials and operation shall be defined and resolved to the extent necessary to warrant low-risk go-ahead with a demonstration plant venture following completion of this project. A preliminary design of a commercial-scale plant of such quality and detail as to be directly useful to an Architect/Engineer firm in the final design of an actual commercial unit is the ultimate output of the project.

## 2.4 Data Base

The data base resulting from the above work covers three facilities and a broad parametric range. The three facilities and resulting data points were:

| | |
|---|---|
| - Cities Service Bench Scale | - 58 data points |
| - Rockwell 1/4-TPH Hydrogasification | - 49 data points |
| - Rockwell 1-TPH Hydroliquefaction | -110 data points |

The parametric ranges were:

| | |
|---|---|
| - Bituminous, subbituminous coal and peat | |
| - Residence times | 30-5000 msec |
| - Pressures | 500-1500 psi |

| | |
|---|---|
| - Temperatures | 1400-2000 F |
| - $H_2$/Coal ratios | 0.25-1.0 |
| - Coal throughput | 1000-3000 lb/hr |

Rockwell has judged the data from the different facilities to be consistent at the full range of coal throughput (References 1 & 2).

## 2.5 Commercial Hydrogasification Reactor Operating Conditions

The range of hydrogasifier operating conditions which are applicable in the design of a commercial SNG plant using either bituminous or subbituminous coals, or peat, include:

| | |
|---|---|
| - Residence Times | 1000-3000 msec |
| - Pressures | 500-1500 psia |
| - Temperatures | 1700-1900 F |
| - $H_2$/Coal Ratios | 0.20-0.45 |
| - Commercial Reactor Throughput | 140-220 ton/hr. |

# 3.0 PROCESS DESCRIPTION

The following describes the developer's Preliminary Commercial Concept Design of the Cities Service/Rockwell (CS/R) Coal Hydrogasification Process to produce SNG from coal at a rate of 250 billion Btu/day (HHV) and benzene, a principal liquid co- product. (Refer to Process Block Flow Diagram, Fig. IV-1).

## 3.1 Summary

The key features of this process are: an entrained flow short-residence-time (SRT) coal hydrogasifier reacting coal with hot hydrogen to a raw gas high in methane content and to char; an entrained flow, char/coal/oxygen/steam gasifier for the production of hydrogen make-up; and a cryogenic hydrogen-methane separation system yielding an SNG product and recycle $H_2$.

Because of the high initial carbon conversion to methane in the hydrogasifier only a trim methanation subsequent step is required.

By controlling the temperature and the residence time of the reactants in the coal hydrogasifier, benzene is also produced as a valuable coproduct.

Both the coal and char gasifiers are fed using a dense-phase dry solids system using $H_2$ or other reacting gas as the transport medium.

The balance of the process units in the plant are conventional consisting of: coal preparation, oxygen plant, gas quench, benzene recovery, shift conversion, acid gas removal, trim methanation, sour water stripping, ammonia recovery, sulfur recovery, solids/liquids effluent recovery, steam/power/water treatment and off sites.

Feed materials consist of coal, raw water and air. Products are High-Btu Gas (SNG) and Benzene. By-products are sulfur and ammonia. Effluents are $CO_2$, clean flue gas, and solids sludge (mainly ash) and water losses.

## 3.2 Coal Preparation/Feeding

The raw coal is prepared conventionally by crushing to 70% minus 200 mesh and dried to about 2% moisture.

The prepared coal is fed to the gasifiers in dense phase using $H_2$ or other transport gas through a pressurized, two-stage, cycling lock hopper. The coal to the steam power boilers is fed by standard dilute phase pneumatic means.

The coal analysis in the proposed Rockwell process using Pittsburgh Seam No. 8 is as follows:

| | Wt.% Dry |
|---|---|
| C | 71.50 |
| H | 5.02 |
| N | 1.23 |
| S | 4.42 |
| Ash | 11.30 |
| O (by difference) | 6.53 |

### 3.3 Oxygen Plant

The oxygen plant is comprised of commercially available air separation units from which liquid $O_2$ is pumped to the reactor at a pressure of approximately 1000 psig. The $O_2$ is vaporized by heating to either 200F for the hydrograsifier or 300F for the char oxygasifier.

### 3.4 Coal Hydrogasification

This unit consists of three reactor trains, or modules, each employing an entrained flow reactor utilizing a rocket-engine-type injector scheme. Rocket engine injector design techniques are used to achieve rapid and thorough mixing of the pulverized coal and hot $H_2$. Each module is comprised of a preburner, injector, reactor and heat recuperator, all of which are integrated within a pressurized shell.

The preburner's function is to raise the recycle + make up gas (about 92 vol. % $H_2$) to the required temperature from 1500F by reacting with $O_2$. The gas then passes to the injector.

In the injector, coal (2% moisture, 70% - 200 mesh)in dense phase is fed using hydrogen as transport gas (approx. 0.003 lb. mols per lb. of coal). The coal rapidly mixes with the heated $H_2$ gas from the preburner at the reactor inlet to achieve a theoretical mixed temperature of 1400F. The hydropyrolysis reactions are carried out in the reactor section. The product gases are subsequently cooled in the recuperator section directly beneath.

In the reactor the coal is both pyrolyzed and reacted with the hydrogen gas. The products are dependent upon the residence time, initial temperature, pressure and reactant composition and can vary from a totally gaseous product to one in which significant amounts of high purity benzene are co-produced. In the case described the variables are set to produce a "moderate" level of benzene (nominally 5.8% carbon conversion to benzene) as well as about 26% $CH_4$ in the raw gas. The $H_2$ recycle rate is set at 0.20 lbs $H_2$/lb MF coal leaving an excess of $H_2$ carried with the raw product gas. Most of the excess $H_2$ is recovered in the cryogenic separation unit and recycled.

The overall reaction can be broadly expressed as follows:

$$\text{Coal} + H_2 = CH_4 + C_6H_6 + C_2H_6 + CO + CO_2 + H_2 + NH_3 + H_2O + \text{Char}$$

The reactor conditions based upon Rockwell 1/2-TPH bituminous coal test No. 313-23 are:

| | |
|---|---|
| $H_2$ preburner inlet temp | 1500F |
| Coal/$O_2$ inlet temp | 200F |
| $O_2$ inlet temp | 200F |
| Reactor outlet temp | 1772F |
| Recuperator exit temp | 834F |
| Reactor pressure | 1000 psig |
| Residence time | 2470 msec |

The overall carbon conversion based on regression analysis of all Rockwell 1/4-TPH hydrogasifier bituminous coal tests and feeding Eastern Bituminous Pittsburgh Seam No. 8 coal is taken as 55.0%. The carbon distribution is as follows:

5.8% to $C_6H_6$, 45.4% to $CH_4$, 3.25% to CO, 0.42% to $CO_2$, 0.14% to $C_2H_6$, and 45.0% residual in char.

The char stream is then separated from the raw product gas via several stages of cyclones and is subsequently fed to the char/coal oxygasifier unit.

3.5 Gas Treatment and $H_2$ Recovery

The raw product gas which has been separated from the char and quenched is then processed through the following steps:

- o Benzene Solvent Absorption
- o Diglycol Amine Acid Gas Removal
- o Trim Methanation
- o Gas Drying
- o Cryogenic Methane/$H_2$ Separation

The SNG product gas exiting the cryogenic unit is compressed to 1000 psig and 120F and has a composition of approx. 94.5% $CH_4$ and 4.8% $H_2$, with the balance consisting of $N_2$, AR, ethane, CO and only traces (0.3 ppm) of $H_2S$.

### 3.6 Hydrogen (Make-up) Production

Hydrogen is produced by reacting the char from the hydrogasifier with steam and oxygen to produce a raw syngas mixture of $H_2$, CO, $CO_2$, $H_2S$, some methane and ammonia. The char is supplemented with coal to produce the required $H_2$ quantity to balance the plant.

The char coal gasifier is a pressurized, entrained flow, short-residence-time oxygasification reactor. The same dense phase solid transport feeding techniques used in the hydrogasifier will be employed in the oxygasifier to maximize reactor thermal efficiency. Several candidate configurations for this application include those under development by Texaco, Shell-Koppers and Mountain Fuel Resources.

The overall reaction is broadly expressed as:

$$\text{Char} + \text{Coal} + O_2 + H_2O = CO + H_2 + CO_2 + H_2S + CH_4 + NH_3 + N_2 + H_2O \text{ (excess)}$$

Reactor conditions are targeted at:

| | |
|---|---|
| Reactor pressure | = 950 psig |
| Reactor exit temp | = 2460F |
| Char inlet temp | = 834F |
| Steam inlet temp | = 1000F |
| $O_2$ inlet temp | = 300F |
| Coal inlet temp | = 200F |

Performance data were determined from kinetic and equilibrium calculations at the stated exit reactor conditions.

The raw syngas is further processed by conventional steps as follows:

- o Gas Quench & Solids Removal
- o Shift Conversion
- o Acid Gas Removal
- o Trim Methanation

The resulting make up gas consists of about 87.8% $H_2$, 4.6% $CH_4$ and 7.6% $H_2O$.

3.7 Other Operations

The other operations consist of conventional effluent treatment and byproduct recovery steps such as solids (ash) recovery, sour water stripping, ammonia recovery, sulfur recovery and bio- oxidation.

The utilities plant includes water treatment, steam and power generation and other facilities. Since this complex is conceived to be self-supporting from a utilities standpoint, the only major imports are raw water and coal.

3.8 General

The overall process described above is conceptual at this point. The material balance is based upon Rockwell experimental data around the hydrogasifier to a large extent and around the oxygasifier. In addition, the product gas treatment from the acid gas removal through cryogenic methane separation is based upon a screening type evaluation study performed by Air Products and Chemicals, Inc., and reported in May 1979.(3)

The balance of the plant units do not have the benefit of an engineering design from which a detailed closed material balance could be generated. As a result much of the treatment units and the utility sections have been factored into this preliminary balance. Because of this it is suggested that comparative conclusions not be drawn for such items as overall plant thermal efficiency et.al., since power generation and heat recovery play significant roles in such factors. However, the process thermal efficiency may be viewed with much greater confidence since this can be derived from the principal process stream material balance which is based on broad experimental background.

## 4.0 STRENGTHS AND WEAKNESSES

The items listed and briefly described below are considered to be strong points and weak points characteristic of the CS/R Hydrogasification Process relative to current commercial or near commercial processes for producing high Btu SNG.

### 4.1 Strengths

- o <u>High Carbon to Methane Conversion</u>

  A relatively high single pass carbon conversion (45%) to methane in the gasifier reduces the downstream conversion requirements using only trim methanation.

- o <u>Versatile Fuel Application</u>

  This type of gasifier has been found to be applicable to all types of coal and other solid fuels such as peat and lignite.

- o <u>No Catalyst Required</u>

  No catalyst addition or recovery systems required.

- o <u>Dense Phase Feed</u>

  Dry fed dense phase coal using reactant transport gas reduces heat requirement relatively to a slurry feed.

- o <u>High Btu Gas with Liquid Option</u>

  The end product may be adjusted from all gas to benzene coproduction providing an attractive potential flexibility.

- o <u>High Throughput Rates (Short-Residence-Time) and Small Reactor Size</u>

  Relative to reactor volume this type of reactor allows around 2000 $lb/hr/ft^3$ of coal feed. This is reflected in the short residence time (seconds or less) and the small reactor size.

  The small reactor size results in many advantages which might be unavailable or impractical for larger conventional reactors.

The highest quality of materials of construction may be used since they are not such an economic factor.

Use of modular reactor elements allows ease of transition from pilot to commercial scale including testing at full element or cluster size.

Most of the key reactor components can be shop fabricated and tested under high quality assurance levels. Maintenance and replacement of elements is simplified and downtime theoretically reduced.

Small reactant inventory allows rapid shutdown or quench.

- o <u>No Tars in Raw Product Gas</u>
  The absence of liquid hydrocarbons and tars allows almost complete vapor phase product recovery processing steps. The benzene is recovered by liquid absorption and purification.

4.2 Weaknesses

- o <u>Large $H_2$ & Recycle System</u>
  An excess of $H_2$ is needed to satisfy the $CH_4$ synthesis and coal heat up to reaction temperature. This $H_2$ is carried through the raw SNG processing steps, cryogenic separation and recycle.

- o <u>$O_2$ Plant Required</u>
  The production of $H_2$ for make up requires a large $O_2$ plant.

- o <u>Lockhopper System</u>
  Coal and char fed by dense phase which is an advantage still requires a high pressure ( 1000 psi) lockhopper system.

- o <u>Key Steps Require Development</u>
  Several areas require further development to validate the overall process concept as follows:

- Char oxygasifier
- Heat recovery of solids + gas streams
- Scale up from modular to full scale reactors
- Feed splitting to modular elements
- SRT control/safety systems

## 5.0 POTENTIAL IMPROVEMENTS

The following items are suggested as potential solutions to problem areas that appear to exist as the processes are now proposed by the developers. These also take into account the stage of development of the overall process and the conceptual status of many of the companion operations to and around the proposed gasification step. These suggestions are the result of reviewing items mentioned in other sections such as weaknesses, alternates, disadvantages and status of development. It is suggested that these are potentials only viewed from the perspective of this assessment and will require more detailed investigation and evaluation prior to testing. It is for this reason they are called potential improvements.

Some potential improvements which appeared worthy of investigation are as follows:

1. Increase BTX (Benzene) production to a maximum.

2. Reduce the $H_2$/coal (or carbon) ratio to a practical minimum.

3. Apply catalysts to the gasification step(s).

4. Apply a $H_2$ separation process (such as Monsanto hollow fiber process) to recover $H_2$ for recycle to reduce processes downstream of gasification and acid gas removal.

5. Process all the coal through the hydrogasifier producing a larger quantity of char. Use char only for $H_2$ production and any

balance for utility steam/power generation. A larger portion of the total coal volatiles would be captured in the raw product gas and less lost to $CO_2$ in the steam boilers and to some extent in the char gasifier.

6. Burn a stream of desulfurized raw product gas or a stream of raw syngas from the char gasifier for steam/power generation to reduce need for flue gas desulfurization.

7. Produce hydrogen by reforming a portion of the product methane rather than oxygasification of char and coal.

5.1 Increase BTX (Benzene) Production to a Maximum

The base case considers benzene production at a moderate level of 5.34% based on carbon converted in the hydrogasifier. Under conditions to produce a maximum of this coproduct the yield can double.

On the basis of value placed on purified recovered benzene by Rockwell, this increase would further credit operating costs by another $62.2 million annually. This would reduce the gas cost by $0.76 per million Btu.

5.2 Reduction of the $H_2$ to Coal or Carbon Ratio to a Minimum

The CS/R coal gasification process as proposed by the developers for this assessment has fixed the $H_2$/coal ratio in the hydrogasifier feed at 0.2041 lbs $H_2$/lb MF coal. Experimental runs were made at ratios from 0.25 to 1.0. The stoichiometric quantity of $H_2$ converted (gasifier + methanation) is 0.0904 lbs of $H_2$/lb MF coal with 0.128 lbs $H_2$ exiting with the raw product gas to be recovered and recycled. The optimum (minimum) level of $H_2$ to coal has not been established but is being approached gradually by ongoing testing.

For purposes of assessing the magnitude of cost reduction due to a decrease in the $H_2$/coal ratio, it is assumed that the same conversion could be achieved at a $H_2$/coal ratio midway from the stoichiometric requirement and the level proposed. This would be 0.147 lbs $H_2$/coal and the following reductions could be expected:

(a) Reduced gas flow through quench

(b) Reduced gas flow through benzene recovery

(c) Reduced gas flow through acid gas removal

(d) Reduced gas flow through methanation

(e) Reduced gas flow through drying and cryogenics

(f) Reduced recovered hydrogen flow

(g) Reduced total recycle flow.

Rough estimates of the percentage capital cost reduction and the cost effect on gas cost for the above are as follows:

| | % Reduction | Total Capital Cost Reduction ($\$10^6$) |
|---|---|---|
| (a) | 17. | 9.7 |
| (b) | 17. | 2.3 |
| (c) | 17. | 3.1 |
| (d) | 25 | 11.3 |
| (e) | 25 | |
| (f) | 25 | 17.8 |
| (g) | 12 | |
| | | 44.2 |

Effect on Gas Cost = $\$0.10/10^6$ Btu reduction

5.3 Apply Catalyst to the Gasification Steps

Work in areas other than SRT (short residence time) coal gasifiers using low cost catalyst additives to enhance the conversion and reactivity of coal suggests that there may be potential to apply catalysts to the Rockwell CS/R Hydrogasification Process as well. Although experimental data are lacking for SRT applications certain advantages drawn from other processes appear to merit investigation.

Some advantages envisioned are:

- o Possible reduction of $H_2/C$ ratio with proportionate cost reductions to all operations related to $H_2/C$ level.

- o Lower gasification temperatures favoring higher $CH_4$ yields at a given $H_2/C$ ratio in the hydrogasifier.

- o Reduced downstream process steps after gasification depending on the reduction of recycle and excess components in the raw product gases.

Some of the added steps which would have to be more than compensated by the benefits would be:

- o Catalyst cost and consumption
- o Catalyst addition operations
- o Catalyst recovery
- o Spent catalyst disposal

ORIGINAL PAGE IS
OF POOR QUALITY

Since a measure of this potential is not available for an SRT gasifier at this time, a quantitative estimate of the benefits has not been attempted and this discussion is limited to qualitative items above. However, it is judged that if catalyst addition proves to be justified the overall reductions should be at least equal to that of minimizing the $H_2/C$ ratio described above.

5.4 Apply an Improved $H_2$ Separation Process

A significant portion of the energy consumed in the Rockwell CS/R Hydrogasification Process is related to the separation, recovery and recycling of a large stream of $H_2$ from the raw product gas. The proposed process employs a cryogenic separation and recovery system.

The potential exists for cost reductions if a lower energy consuming and simpler operation could be devised and applied to this process. One candidate process might be the Monsanto Prism® hollow fiber $H_2$ separation process.

It appears that the pressure levels, $H_2$ partial pressure and other conditions of the raw product gas after acid gas removal present an ideal application for trial of the Monsanto process. The process has been applied successfully by the developer on a commercial scale for almost three years to processes under similar conditions.

The most obvious advantages appear to be:

- o Elimination or significant reduction of the cryogenic operation.
- o Reduced gas flow volume downstream of acid gas removal with corresponding reductions to methanation and gas drying units.

Rough calculations applying Monsanto published data and estimated recoveries of $H_2$ indicate that by applying this process, after acid gas removal, to the raw product gas the $H_2$ can be separated for recycle, the cryogenic section can be eliminated, the gas volume through methanation and gas drying is reduced to about half and the residual pressure remaining in the product gas approximately compensates for the recompression required for the recycle $H_2$. A more rigorous analysis is required before recommending testing for this application.

An estimate of the cost effect shows about equal total capital required. Any gain would be achieved by reduced operating costs mainly in energy savings around the cryogenic unit and gas compression. This would be reflected in coal consumption for steam/power generation. No estimate was attempted since the Rockwell conceptual process did not include a utility/power breakdown by process unit.

5.5 Process Total Coal Through Hydrogasifier

Rather than three separate coal feeds to the hydrogasifier, the oxygasifier and the steam/power generator, it was thought that there may be an advantage in processing all of the coal first through the hydrogasifier and using the resulting char to feed the oxygasifier and steam/power generator.

Some potential advantages envisioned were:

- The capture of a larger proportion of volatiles which are lost to $CO_2$ as the process is now proposed where about 33% of the total coal to the plant goes to the oxygasifier and steam/power generator.

- Recovering a higher level of BTX (benzene) in proportion to the SNG product since all of the coal volatiles will exit the hydrogasifier for recovery.

- Little or no sulfur in the boiler flue gas. Using char fuel the sulfur would be reduced to 25% of coal fuel. Using a stream of desulfurized raw product gas the sulfur would have already been removed as $H_2S$ in the acid gas removal unit.

It becomes obvious that hydrogasifying sufficient coal under the same conditions and conversion parameters to produce enough char for both $H_2$ production and boiler feed would lead to an excess of SNG. Possibly the way a balanced plant would be achieved would be to hydrogasify that quantity of coal to produce char for all $H_2$ required and using a slipstream of raw product gas after desulfurization as boiler fuel to balance the plant.

In addition, since a greater rate of coal is seen by the hydrogasifier for a given amount of SNG the $H_2$ quantity must be about the same as the quantity used in the process assessed in this study.

Using a thermodynamic equilibrium calculation program for the hydrogasifier developed in Lewis Research Center by McBride and Gordon[4], the calculations showed a net increase of about 13.0% total coal consumption reflecting an increased gas cost of about $0.23 per million Btu. The increase in benzene production was only 8% with an off- setting effect on gas cost of only $0.06/million Btu.

5.6 Burn Raw Product Gas for Power/Steam Generation

This alternate is aimed at eliminating the need for the costly flue gas desulfurization step required if the feed coal at 4.42% sulfur were burned as in the base case.

In order to achieve this a stream of raw product gas would be tapped after acid gas removal. To replace this gas quantity additional coal would be processed through the hydrogasifier.

This alternate is actually similar in part to Alternate No. 5 where the total coal feed is processed through the hydrogasifier including that required to supplement the char to the oxygasifier. Taken alone and still feeding coal to the oxygasifer about half of the effects might be realized. Since Alternate No. 5 proved to be a cost increase this alternate would also be more costly and was abandoned.

5.7 Two schemes were considered to produce hydrogen by reforming part of the product methane rather than oxygasification of char and coal. One scheme used the char/coal as fuel to the methane reformer. A second scheme used additional methane as fuel to the reformer.

The second scheme was rejected on the basis of signficantly higher capital costs. The hydrogasification stream and the hydrogen plant stream called for about twice the capital costs. Also, although the operating costs were not evaluated, there would be an excess of char which would add to operating costs and resulting overall product gas cost.

The first scheme was estimated to be about equal in capital cost to the base case. It was also rejected on the basis of probable higher operating costs since the hydrogasification plant was about double the size of the base case requiring a proportionate increase in coal feed. In addition, it required the use of a char/coal fired reformer which has not been developed.

## 6.0 COMPONENTS REQUIRING DEVELOPMENT

In order to assess the CS/R Hydrogasification Process from the perspective of a fully developed commercial scale operation several new operations auxiliary to the principal gasification steps must also be considered. These may not be apparent during the pilot scale development but when expanded to the required commercial scale the need for development becomes more obvious.

Some of these auxiliary operations which are critical to the successful performance of the conceptual design as proposed include:

(1) A full scale dense phase coal or char feed system.

(2) A fail-safe control system for hydrogen preheating and feeding to hydrogasification.

(3) A char separation, handling and dense phase feed system for oxygasification with steam.

(4) A hot char feeder control system under high pressure into an oxygen atmosphere reactor.

### 6.1 Dense Phase Coal Feed System (Commercial Scale)

A rough calculation indicates that pulverized coal at a relatively low bulk density requires a significant number of large high pressure vessels and a sizable recompression and letdown conservation system for transport gas to accommodate the proposed dense phase feed system.

Assuming an hourly cycling of the hopper feed vessels feeding into a 1000 psi reactor, limiting vessel sizes to 12 feet diameter, using recycle $H_2$ gas for transport medium and allowing some excess pressure residual in the evacuated feed vessels, approximately 25 vessels would be required designed for over 1200 psi in a high hydrogen partial pressure vapor phase.

Although the transpo gas is used in the reactor and figures in the overall material balance, about twice this quantity will remain behind when the

feed vessel has exhausted its coal. This gas must be removed, purged, recompressed and transferred to another vessel filled with coal to repeat the cycle.

The total bulk volume of coal amounts to about 25,000 cubic feet per hour. The void fraction containing the high pressure gas amounts to more than half of this volume. Translated to standard cubic feet per minute of circulating $H_2$ gas this is about 20,000 SCFM.

The possible impacts, response intervals, mechanical failures and hazards of such a system must be thoroughly investigated to insure that the reliability and safety will be in accordance with the 90% operating factor set for the commercial facility.

## 6.2 A Reliable Safe Gasifier Feed and $H_2$ Preheating System

An SRT high mass throughput gasifier system introduces requirements for advanced techniques of control safety and reliability when applied to a commercial scale not yet available from existing technology. To a partial extent rocket feed and control technology is certainly appropriate where applicable. In a coal hydrogasifier however the products discharge to a very large delicately balanced closed system with enormous inertia.

Precedents already exist in coal oxygasifiers being constructed on a large scale with failures in operation due to unrecognized inadequacies in unproven feed mechanism designs. These gasifiers were not short residence time high mass throughput which tends to compound the potential control problems. The transfer of components from conventional systems to new applications should be viewed with caution since their incompatibility may easily escape discovery.

While SRT reactors offer many real potential advantages they also introduce other potential problems. The most readily recognized seem to center on the area of control, reliability, response time. Some of these problems surface when viewed on a commercial scale by anticipating possible upset conditions and the requirements for safe and orderly recovery. Some of these relative to the gasifier are:

Upstream Upsets

- Loss of Coal Feed - unreacted $H_2$ to system, temperature drop
- Loss of $H_2$ Feed - unreacted $O_2$ to system
- Coal Feed Splitting to Modules

Downstream Upsets

- Char Plugging - Immediate over pressure and shutdown
- Loss of Quench - Over temperature and shutdown
- Pressure Buildup
- Relief System Failure

Reactor Upsets

- $O_2/H_2$ Balance - $O_2$ to system or temperature drop
- Module Balancing
- Average Conditions vs. Individual Stream Sensing
- Sound Attenuation and Mechanical Sonic Effects

Looking at this limited list of upsets the most obvious of the requirements seems to center around the problem of the very short time which will exist to sense, measure and effectively react before a failure or unwanted condition prevails. The following are some of the requirements which must be satisfied after first determining what and how fast an upset condition may occur:

- Anticipatory Sensing
- Direct Measurement Sensing
- Response Rate
- Recovery Rate
- Isolation
- Relief
- Safe Orderly Shutdown
- Provide Surge Capacity

The time intervals and inventories within and around the gasifiers are so small that the sensing and control function will probably not allow supervisory confirmation or response. This means that almost total control loop functions must be integrated within an instrumentation system with very high reliability and possibly high redundancy.

6.3 Hot Char Handling Separation & Dense Phase Feed to Gasifier

One of the possible alternates to the proposed process is the dense phase feeding of hot dry char to the oxygasifier for the production of the required hydrogen. Such a system does not exist and has not been tested in combination with the hydrogasifier.

The integration of such a system will require the development of the following components to operate continuously with the rest of the process:

- An efficient hot char separation and intermediate surge capacity.

- Dense phase feed system possibly with the introduction of supplemental transport gas if the raw product gas carried with the char is not sufficient or at high enough pressure. This will require an isolation method to operate the dense phase char feeding in a cycling lockhopper system similar to the coal feed to the hydrogasifier.

- A method of combining and balancing of a supplemental coal feed with the char if this is required as the proposed process indicates. If the coal and the char oxygasifiers are separate trains the product gases must be compatible as to the overall process so either train may be shutdown without shutting down the whole process, or a large over-capacity from each train may be required to carry the load temporarily.

- Possibly develop the oxygasifier to operate on either coal or char or a combination of coal plus char. This will require a variable steam-oxygen feed for optimum oxygasification and may introduce other feed, balancing and control problems.

## 6.4 Dense Phase Hot Char, Steam, Oxygen Feed Control System

The dense phase feeding of hot char poses the same design problems as noted for the dense phase coal feed system on a commercial scale but the following present additional problems which must be confronted:

- A safe system of control in all modes, i.e., start-up, shutdown, emergency and normal transient operations. This is particularly important when a large proportion of the reactant is high pressure oxygen.

- The possiblity of catastrophic explosion with high concentration of $O_2$ available to the oxygasifier due to several upset causes (loss of steam, loss of char feed, etc.).

- A reliable solids flow measurement and control system with high sensitivity, response and recovery.

- An injector mechanism functioning similar to the hydrogasifier injector but which will accommodate both $O_2$ and steam safely and reliably coupled with its control system.

## 7.0 REFERENCES


(1) "Development of a Single-Stage, Entrained-Flow, Short-Residence Time Hydrogasifier," Final Report, Contract No. EX-77-C-01-2518, Rockwell International, July 1979, Report No. FE-2518-24.

(2) "An Analysis of Coal Hydrogasification Processes," Final Report, Contract No. EF-77-A-01-2565, Bechtel Corporation, August 1978, Report No. FE-2565-14.

(3) "Cryogenic Methane Separation/Catalytic Hydrogasification Process Analysis," Air Products and Chemicals, Inc., Contract ET-78-C-01-3044, Interim Report, 15 May 1979.

(4) McBride, B. J. and Gordon, S., "Fortran IV Program for Calculation of Thermodynamic Data," NASA Lewis Research Center, August 1967.

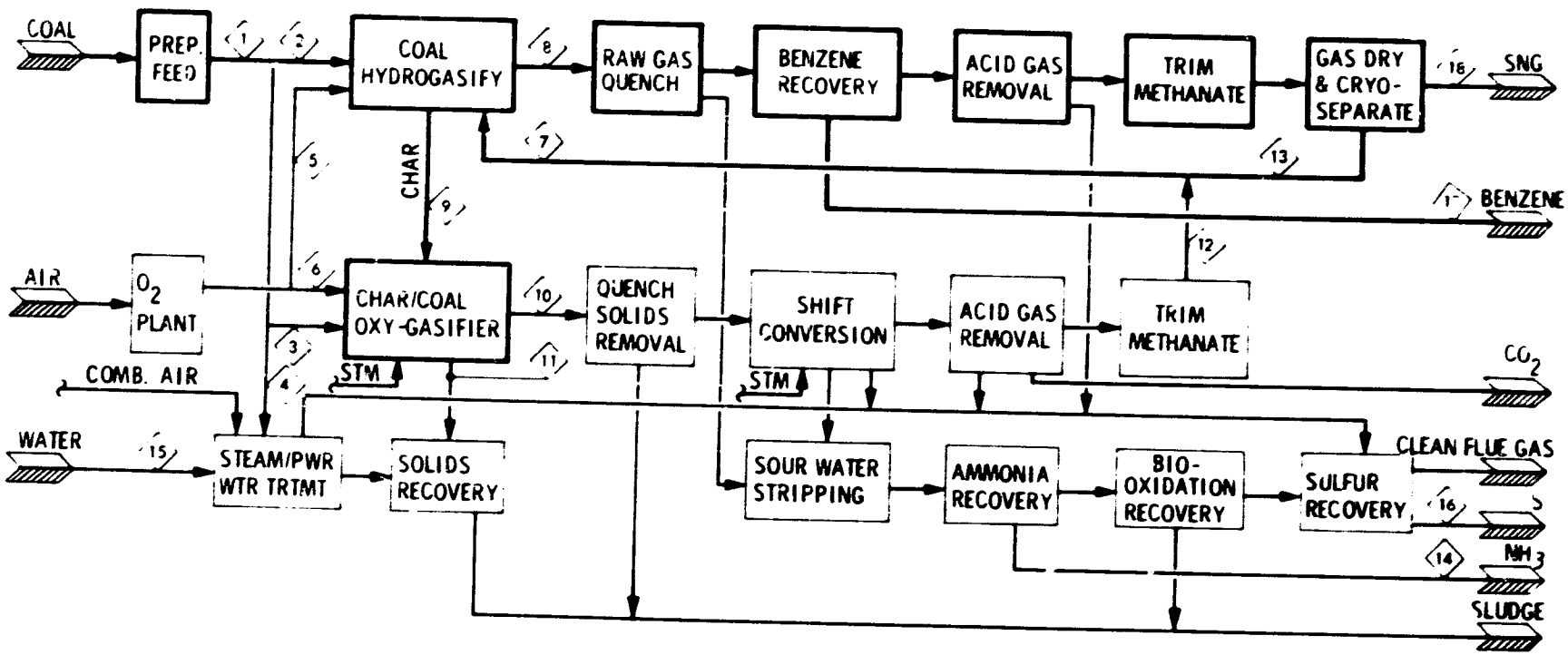


| FEED | | |
|---|---|---|
| COAL (2% MOIST) | 16,528 | T/D |
| $O_2$ (100%) | 6,034 | T/D |
| RAW WATER | 67,596 | T/D |

| PRODUCT | | |
|---|---|---|
| SNG | $\approx 250 \times 10^9$ | Btu/D |
| BENZENE | 448 | T/D |
| $NH_3$ | 123 | T/D |
| S | 738 | LT/D |

FIGURE IV-1. CS/R Hydrogasification Block Flow Diagram.

TABLE IV-1. CS/R Hydrogasification Process Material Flow Balance

| STREAM - NO ◇ / NAME / COMPONENT | 1 | 2 | 3 | 4 | 5 | 6 | 7 | 8 | 9 | 10 | 11 | 12 | 13 | 14 | 15 | 16 | 17 | 18 |
|---|---|---|---|---|---|---|---|---|---|---|---|---|---|---|---|---|---|---|
| | TOTAL COAL (2% MOIST) | HYDRO GAS COAL | OXY GAS COAL | UTILITY COAL | HYDRO GAS $O_2$ | OXY GAS $O_2$ | RECYCLE HYDRO GAS | RAW GAS | CHAR | RAW SYNGAS | ASH | HYDRO GAS MAKE-UP | RECOVERED HYDRO GAS | $NH_3$ | RAW WATER | SULFUR | BENZENE | SNG PRODUCT |
| LB MOL/HR | | | | | | | | | | | | | | | | | | |
| $CH_4$ | | | | | | | 4,743 | 28,971 | | 15 | | 1,389 | 3,354 | | | | | 26,855 |
| $C_2H_6$ | | | | | | | | 38 | | | | | | | | | | 38 |
| $C_6H_6$ | | | | | | | | 478 | | | | | | | | | 478 | |
| $H_2$ | | | | | | | 93,497 | 57,436 | | 19,211 | | 42,929 | 50,567 | | | | | 656 |
| CO | | | | | | | | 1,738 | | 29,745 | | | | | | | | |
| $CO_2$ | | | | | | | | 225 | | 6,302 | | | | | | | | |
| $H_2S$ | | | | | | | | 1,127 | | 688 | | | | | | | | |
| $NH_3$ | | | | | | | | 631 | | 1 | | | | 602 | | | | |
| $N_2$ | | | | | | | 202 | 202 | | 128 | | 128 | 73 | | | | | 128 |
| AR | | | | | 7 | 71 | 88 | 95 | | 72 | | 71 | 17 | | | | | 79 |
| $O_2$ | | | | | 1,459 | 14,253 | | | | | | | | | | | | |
| $H_2O$ | 1,528 | 1,020 | 240 | 268 | | | 1,381 | 6,627 | | 12,513 | | 1,381 | | | | | | |
| TOTAL LB MOL/HR | | | | | 1,466 | 14,324 | 99,911 | 97,568 | | 68,656 | | 45,889 | 54,012 | 602 | | | 478 | 27,755 |
| | | | | | | | | | | | | | | | | | | |
| TOTAL LB/HR | 27,535 | 18,388 | 4,327 | 4,820 | 46,980 | 458,947 | 299,001 | 855,791 | | 1,404,301 | | 140,326 | 158,675 | 10,252 | 5,633,000 | | 37,313 | 439,943 |
| | | | | | | | | | | | | | | | | | | |
| SOLIDS, LB/HR | | | | | | | | | | | | | | | | | | |
| COAL (MF) | 1,349,799 | 901,383 | 212,116 | 236,300 | | | | | | | | | | | | | | |
| CHAR | | | | | | | | | 405,622 | | | | | | | | | |
| ASH | | | | | | | | | | | 126,220 | | | | | | | |
| SULFUR | | | | | | | | | | | | | | | | 68,920 | | |
| | | | | | | | | | | | | | | | | | | |
| TOTAL OVERALL, LB/HR | 1,377,334 | 919,771 | 216,443 | 241,120 | 46,980 | 458,947 | 299,001 | 855,791 | | 1,404,301 | | 140,326 | 158,675 | 10,252 | 5,633,000 | 68,920 | 37,313 | 439,943 |
| | | | | | | | | | | | | | | | | | | |
| TEMP, °F | | 200 | 200 | | 200 | 300 | 70-1500 | 834 | 834 | 2,480 | 2,480 | | 96 | | | | | 106 |
| PRESS, PSIA | | >1,000 | >965 | | >1,000 | >965 | >1,000 | <1,000 | <1,000 | <965 | <965 | >400 | 388 | | | | | 1,000 |

# SECTION V
# EXXON CCG PROCESS

## SECTION V

## ASSESSMENT OF THE EXXON CCG PROCESS

### 1.0 SUMMARY

The Exxon catalytic coal gasification process consists essentially of a single step gasifier which generates methane. The reactions in the gasifier involve coal gasification, steam-shift, and methanation. Therefore, there is no need for additional steps outside the gasifier for shift and methanation to produce SNG.

The coal feed is impregnated with $K_2CO_3$ catalyst prior to entering the gasifier. Approximately 90 percent of the carbon in the coal is converted to methane and carbon-dioxide in the gasifier; 10 percent of the carbon is converted to char and remains with the ash and catalyst. About 90 percent of the catalyst is recovered for reuse in the process. The residue ash/char/catalyst mixture is then disposed of.

From the gasifier raw gas SNG is separated from CO and $H_2$ which are then recycled to the gasifier. In the gasifier, recycled CO and $H_2$ are methanated while more CO and $H_2$ are produced from coal gasification. When the process operates at a steady state, the rate of $CO/H_2$ recycling equals the rate of $CO/H_2$ production resulting in a net production of $CH_4$ and $CO_2$ in the gasifier.

### 2.0 CURRENT STATUS OF DEVELOPMENT

Exxon Research and Engineering Company is engaged in research and development on a catalytic coal gasification (CCG) process for the production of substitute natural gas (SNG) from coal. An outline of the stages of development is shown below:

#### 2.1 Previous Research Work

Sponsor: Exxon

Period: Pre-1979

Objectives: General CCG concept and catalyst recovery using bench-scale units.

## 2.2 Predevelopment Program

Sponsor: DOE, $2.4 MM, Contract No. E(49-18)-2369

Period: July 1, 1976 through December 31, 1977.

Objective:

- o Operation of 6" x 30' fluidized bed gasifier (FBG) with Illinois coal.
  - Operate with mixed $K_2CO_3$/ $Na_2CO_3$ catalyst
  - Operate with recycled catalyst
- o Bench-scale studies on gasification kinetics and catalyst recovery.
  - Broaden data base to other coals
  - Test reactivity of recovered catalyst
  - Study critical factors in catalyst recovery
  - Operate the small fluidized bed Continuous Gasification Unit (CGU) and fixed-bed units to obtain additional kinetic data.
- o Conceptual design of a commercial CCG plant.
  - Continue engineering screening studies
  - Prepare an updated commercial plant study design.

During the Predevelopment Program several technical questions were resolved, and the technology has now moved into the Process Development Program.

## 2.3 Process Development Program

Sponsor: DOE/GRI, $16.8 MM

Exxon, $3 MM

Period: July 1, 1978 through June 30, 1981

Objectives:

- o Operation of 1-T/D Process Development Unit (PDU).

- start up of gasification, gas separation, and catalyst recovery systems

- Operate PDU as a total plant integrating every process system in the unit

o Bench research and pilot plant support.

o Engineering research and development.
  - Study economics and guide research
  - Define key features of the process for supporting engineering design and operations of a Large Pilot Plant (LPP).

Exxon disclosed in March, 1980, that the PDU construction was almost completed. Individual units had been tested for preparation of an integral PDU operation. During the test, it was found that when the gasifier was operated at 500 psi level, the bulk density of the fluidized bed was about 1/3 of the density which would be expected at the 100 psi pressure level.

After considerable development efforts, Exxon was able to adjust the expected density in the fluidized bed (e.g., by varying methods of catalyst impregnation and drying, etc.) and operate the gasifier at about 300 psig.

In May 1980 Exxon announced plans to construct a 100 TPD LPP in Holland with operation expected to begin by mid-1985.

Further details and discussion of the development program are contained at the end of this section.

## 3.0 Process Description

The following describes the process flow of the overall conceptual process plant of the Exxon Catalytic Coal Gasification Process by section as indicated in the block flow diagram, Figure V-1. The heat and material balance are taken from Exxon's Commercial Plant Study Design[1].

### 3.1 Coal Preparation and Catalyst Addition

The feed coal is crushed to minus 8 mesh size in the coal handling and storage section.

The feed coal as received by the plant is an Illinois No. 6 bituminous coal, washed, or cleaned, in a beneficiation plant at the mine. The ultimate analysis is as follows:

| | Wt.% (dry) |
|---|---|
| C | 69.67 |
| H | 5.05 |
| O | 9.45 |
| N | 1.84 |
| S | 4.19 |
| Cl | 0.08 |
| Ash | 9.72 |
| | 100.00 |

| | |
|---|---|
| HHV (Btu/lb dry coal) | 12,730 |
| Moisture, Wt. % (as received) | 16.5% |

The feed coal from the storage is dried from 16.5 wt.% to 4 wt.% moisture in the entrained dryer using flue gas generated in a coal-fired burner as the drying medium. The dryer overhead stream, which contains hot vapor entrained with the dried coal is separated in the cyclone separator. The separated hot gas is recycled to the coal-fired burner except that a slip stream is vented to the flue gas desulfurization unit through an electrostatic precipitator for removal of solid fines. The dried coal separated from the cyclone is transferred via a screw conveyer to a zig-zag blender where the catalyst solution is added and mixed with the coal. The $K_2CO_3$ catalyst-soaked coal is then transferred to another entrained dryer where coal-fired burner flue gas is again employed as the drying medium to dry the catalyst impregnated coal. The overhead stream which contains the dried coal impregnated with catalyst and hot gas is routed to a cyclone separator. The separated hot gas from the cyclone is recycled to the coal-fired burner except that a slip stream is

vented to the flue gas desulfurization unit after its solid fines are removed by an electrostatic precipitator. The separated coal from the cyclone is then transferred to a storage bin facility ready for feeding the gasifier.

### 3.2 Gasifier System

The catalyst-impregnated coal is transferred by gravity to the lockhopper feeding system which consists of the low pressure hopper, the lockhopper and the high pressure feeder. The recycle syngas containing carbon monoxide and hydrogen is employed as the pressure medium for the lockhopper system. After the coal is transferred from the low pressure hopper to the high pressure feeder, it is pneumatically carried into the gasifier in dense-phase flow by the preheated recycle syngas. The preheater is provided for superheating the steam-containing recycle syngas in the radiant section and for preheating a slip stream of the dry recycle syngas in the convection section. The latter is used as the carrier gas for coal feeding.

In the gasifier the catalyst-impregnated coal is fluidized by the superheated stream of the steam-containing recycle syngas. The steam reacts with the fluidized catalyzed coal char, in presence of the recycled syngas containing carbon monoxide and hydrogen. Methane and carbon dioxide as well as hydrogen sulfide and ammonia are produced.

The main reactions taking place in the gasifier are the highly endothermic steam gasification reaction, the mildly exothermic steam-gas shift reaction, and the highly exothermic methanation reaction. The steam-gas shift and methanation reactions are essentially at equilibrium over the catalyzed char in the gasifier. The composite of the three reactions results in no significant net production of carbon monoxide and hydrogen. The resulting overall reaction can be represented as follows:

$$\text{Coal} + H_2O = CH_4 + CO_2 + H_2S + NH_3$$

The above reaction is essentially thermo-neutral. Therefore, only a small amount of heat input to the gasifier is required, primarily to preheat the feed coal and to provide for heat losses. This heat requirement is supplied by the

preheater via the coal feeding syngas stream and by the superheated steam-containing recycle syngas stream. The reaction temperature and pressure in the gasifier are maintained at 1275° and 500 psia, respectively.

The char and ash are withdrawn from the gasifier bottom to the char quench drum and then to the char slurry drum for catalyst recovery.

### 3.3 Heat Recovery and Gas Scrubbing

The product gas from the gasifier is first routed through two cyclone separators connected in series and integrated with the gasifier, and then through a series of heat exchangers for recovery of high temperature heat by generating and superheating high pressure (600 psia) steam required for the gasifier. After recovery of the high level heat, the process gas stream is still well above its water dew point. The bulk of solid fines contained in the process gas stream is then separated in the tertiary cyclone. The gas then proceeds to the process gas saturator and to the Venturi scrubber where the final clean up of solid fines is effected. The clean process gas is then routed through a series of heat exchangers for further heat recovery by preheating boiler feed water and generating low pressure (65 psig) steam. At some point of heat recovery when the process gas is cooled to about 330°F, it is passed through a fixed-bed reactor to catalytically hydrolyze carbonyl sulfide (COS) to $H_2S$. The remaining heat in the process gas stream is then rejected by the coolers. At the end of heat recovery, the process gas enters the ammonia scrubber at 120°F, wherein ammonia is removed from the gas.

### 3.4 Acid Gas Removal and Sulfur Recovery

The overhead gas stream from the ammonia scrubber is routed to the Selexol acid gas removal unit which primarily consists of the $H_2S$ absorber, the $H_2S$ stripper, the $CO_2$ absorber and the $CO_2$ stripper. The effluent stream from the $H_2S$ stripper is routed to the sulfur recovery unit and the overhead stream from the $CO_2$ stripper is vented to the atmosphere. Low pressure steam is employed for reboiling the $H_2S$ stripper. Air is used for stripping off $CO_2$ from the Selexol solution in the $CO_2$ stripper.

The sulfur recovery unit consists of the Claus plant and the tail gas treating plant. Sellable elemental sulfur is recovered in this unit as a byproduct.

### 3.5 SNG Separation

The treated process gas from the acid gas removal unit is then passed through the Molecular Sieve unit for drying and trace $CO_2$ removal. This preparation is required for feeding the downstream cryogenic SNG separation unit.

The process gas stream, now containing only methane, hydrogen and carbon monoxide is heat exchanged with various cold product streams from the cryogenic fractionation system, and is chilled down to a cryogenic temperature. A flash separation is provided at a cryogenic temperature to vaporize the major portion of $CO_2$ and $H_2$ from the liquid $CH_4$. The liquid from this flash separation is then fed to the cryogenic fractionation column operating at approximately 40 psi, where the final separation of methane from the remaining syngas is performed. The overhead gas stream containing primarily the syngas is heat exchanged with the feed stream and then routed to combine with the flashed syngas stream at the feed. The total combined syngas stream is then recycled through the preheater to the gasifier and the lockhopper system. The bottom product from the cryogenic fractionation column is also heat exchanged with the feed stream, vaporized and then compressed to the gas pipeline pressure for sales.

### 3.6 Sour Water Stripping and Ammonia Recovery

This section primarily consists of the sour slurry stripper, the $H_2S/NH_3$ stripper and the ammonia recovery system.

The sour slurry stream containing approximately 10% of solid fines is routed from the Venturi scrubbing system to the sour slurry stripper. The overhead vapor stream from the sour slurry stripper is fed to the sulfur recovery unit and the bottoms is routed to the filter belt press. The filter cake is transferred to disposal and the filtrate routed to the catalyst recovery system.

The sour condensate streams from various K.O. drums in the heat recovery and gas scrubbing section and the $NH_3$ scrubber bottoms are routed to the sour water stripper. The $H_2S$ rich stream is separated by distillation from the $NH_3$ stream and fed to the sulfur recovery. Ammonia is recovered as 20 weight percent aqueous solution as a byproduct. The stripped water is routed to waste water treating.

### 3.7 Catalyst Recovery

This section consists of the $Ca(OH)_2$ digester and fourteen water-leaching stages. All the catalyst containing streams throughout the plant are first routed to the $Ca(OH)_2$ digester and then to the water-leaching stages for recovery of the catalyst. These streams include:

- The char from the bottom of the gasifier, after being slurried in the char drum,
- The solid fines from the tertiary cyclone separator, after being slurried in the fines slurry drum, and
- The filtrate of the sour slurry stripper bottoms.

Lime (CaO) and the makeup catalyst as 30 wt.% KOH are added to the $Ca(OH)_2$ digester for recovery of catalyst tied up with the coal minerals. Fresh catalyst makeup is necessary since a portion of the catalyst is not recoverable from the coal minerals.

The CaO is hydrolyzed in the digester to form $Ca(OH)_2$. The ratio of calcium in the lime feed, to potassium in the feed char and fines solid is 0.7 lb Ca/lb K. The char and fines slurries are soaked in the digester for two hours by agitation at 70 psia and 300°. Under these conditions, approximately 90% of the potassium in the feed solids is solubilized. The remaining potassium leaves with solids in water-insoluble compounds.

About 98.5% of the potassium salts solubilized in the $Ca(OH)_2$ digestion are recovered in the downstream water-leaching stages. Overall, this section

recovers 87% of the total potassium catalyst which entered the gasifier with the feed coal. The remaining 13% is supplied by the makeup KOH.

All the recovered plus the fresh makeup catalyst, containing 37 wt.% $K_2CO_3$ equivalent, are then recycled to the catalyst addition section for impregnation of the feed coal.

### 3.8 The Plant Arrangement

The conceptual commercial process plant with a capacity of 250 MMSCFD product SNG is envisaged to consist of the following trains:

- Four trains of Coal Drying and Catalyst Addition (three trains normally in operation, one train spare);
- One train of Coal Storage Bins;
- Four trains of Reactors, except two trains of pressurization gas handling and one common spare train of feed hopper system and the lockhopper recycle gas compressor;
- Four trains of Acid Gas Removal and Sulfur Recovery;
- Two trains of SNG Separation system;
- Two trains of Sour Water Stripping and Ammonia Recovery;
- Two trains of Catalyst Recovery System.

## 4.0 STRENGTHS AND WEAKNESSES

The following are the strengths and the weaknesses of the Exxon Catalytic Coal Gasification Process.

### 4.1 Strengths

- <u>Simple Process Sequence</u>

  The gasification step combines the reactions of coal gasification, steam shift and methanation in one single gasifier vessel. The net

products of the gasifier are methane and carbon dioxide. It therefore eliminates the requirement of having additional downstream processing steps of shift reaction and methanation for producing SNG.

- <u>High Carbon Conversion</u>

  The carbon conversion in the gasifier is estimated to be in the 90-percent range, and the primary products are methane and carbon dioxide.

- <u>Heat Integration/No Oxygen Plant</u>

  As the reaction in the gasifier is a combination of coal gasification, steam shift and methanation, the composite heat balances of these reactions are essentially neutral. The net chemistry of these reactions can be represented as follows:

  $$\text{Coal} + H_2O = CH_4 + CO_2 \qquad \Delta H \approx o$$

  As indicated above, this reaction is almost thermally neutral and in fact only a small amount of heat is required in the gasifier to preheat the feed coal and to provide for heat losses. Due to this specific feature, an oxygen plant is not required, and potential slagging problems associated with oxygen use are eliminated.

- <u>No Caking Problem</u>

  No pretreatment is required for caking coals. The action of the catalyst to the pore structure of coal minimizes the caking problem associated with metaplast formation in the beginning of the coal-gas reactions.

- <u>Easy to Control</u>

  The gasification reaction in the gasifier reaches equilibrium. The residence time is not critical to the product compositions; therefore, the process is easy to control.

- Simple Gasifier

  The gasifier is a fluidized bed. No complicated special internals are required. Even temperature distribution in the gasifier is expected due to the fluidization mixing effects of the bed.

- No Slagging/No Tar

  As the gasifier reaction temperature is 1275°F, the slagging problem is eliminated. Due to the gasification temperature, exotic materials are not required for the gasifier construction.

- Energy Efficient for $CH_4$ Recovery

  The cryogenic system for separation of $CH_4$ from syngas uses pressure reduction to achieve auto-refrigeration required in the system. Additional heat exchange between the product streams and the feed stream to chill the feed stream to cryogenic temperature is provided. External mechanical refrigeration is not required for normal operation of the system.

- Recovered Catalyst Activity Maintained

  The experiments have indicated that the recovered catalyst maintains its catalytic effect over long recycle operation, as there were no indications of activity reduction.

- Data Base

  - During the Predevelopment Program, the fluid bed gasifier has demonstrated the following characteristics:

    a. Good quality data
    b. High on-stream factor
    c. Recycle catalyst as active as fresh catalyst
    d. Fluid-bed operation stable and easy to control
    e. High carbon and steam conversions with a simulated syngas recycle.

- A computerized mathematical model was developed for simulation of the gasifier operation. The simulated results agreed well with the observed data obtained from the 100 psig gasifier operation tests.

- During the Process Development Program, the Process Demonstration Unit (PDU) gasifier sustained 165 hours of stable operation with Illinois No. 6 coal feed in August, 1979 with the following conditions:

  a. 90 percent carbon conversion.
  b. Gasification at 1250°F and 500 psig.
  c. The bed fluidized with steam and $N_2$ gas.
  d. Fines returned to bed by cyclone.
  e. The run terminated by failure of liquid nitrogen pump.

The PDU work is currently in progress. The major effort of this work is to demonstrate a continuous stable operation for a period of time of the PDU (1 T/D capacity) which consists of all the process systems to be provided in a commercial plant. Also, an investigation will be made of the effect of trace components build-up in each system of the overall process operation.

4.2 Weaknesses (Areas Needing Development)

o <u>Catalyst Recovery</u>

The catalyst recovery system currently being contemplated will recover approximately 90 percent of the catalyst originally impregnated with the coal. The long residence time needed in the water-leaching catalyst recovery process indicates high investment on equipment. The catalyst tends to tie-up with aluminum compounds in coal forming water-insoluble salts. Therefore, if the feed coal contains a large amount of aluminum compounds, high rates of catalyst makeup will result.

o <u>Gasifier</u>

As the reactions in the gasifier are to reach equilibrium, a high residence time is required resulting in a big reactor vessel. Exxon is investigating ways for improvement in this area.

- **Digestion**

  $Ca(OH)_2$ digestion is required to recover the water-insoluble portion of the catalyst. However, the digestion step produces a lot of solid fines which contribute difficulties in solid/liquid separations in the downstream water-leaching process.

- **High Steam Requirement**

  The gasification needs a steam rate of 1.585 pounds of steam per pound of dry coal. In order to supplement the requirement, the off-site reboiler needs approximately 16 percent of the total plant coal feed as fuel for generating the required process steam.

- **10% Char Loss**

  The gasifier converts approximately 90 percent of carbon in the feed coal to gases. The remaining unconverted char is transferred with ashes to the catalyst recovery system and eventually disposed off-plot.

## 5.0 POTENTIAL IMPROVEMENTS

The following potential improvements for the Exxon CCG process are suggested from the perspective of this assessment and will require more detailed evaluation prior to testing. Some potentials which appear worthy of investigation are:

1. Improved Flue Gas Desulfurization
2. Improved Low Level Heat Recovery
3. Improved Cryogenic SNG Recovery
4. Improved Catalyst Recovery

### 5.1 Improved Flue Gas Desulfurization

Exxon's original process design showed two coal dryers: one for crushed feed coal, the other for catalyst impregnated coal. Both dryers use the hot flue gases generated from the coal-feed burners as the drying media. Since the flue gases are from the coal burners, they contain sulfur compounds; therefore, the flue gases from both dryers are routed to a desulfurization unit for making $H_2SO_4$ as a by-product.

A potential improvement might be to replace the coal generated flue gases by the flue gas from the recycle gas preheater. The preheater is fueled by the clean product SNG; therefore, its flue gas is environmentally clean. If this clean flue gas is used as the drying medium in each dryer, then the flue gas from the dryer can be vented to the atmosphere without being desulfurized, and the flue gas desulfurization unit can be eliminated.

As to the flue gas from the coal-burning offsite boiler, it might be routed to the tail-gas treating unit of the Claus sulfur recovery plant. A section of the treating unit could incorporate a hydrolyzer and an absorber for such treatment.

A preliminary cost estimate indicates that the additional equipment would cost about 30% more than that saved, but the coal feed saved by deletion of the coal burners would pay out in about four years. In addition, the separate $H_2SO_4$ storage, handling and shipping facilities could be deleted by elimination of the flue gas desulfurization unit.

5.2 Improved Low Level Heat Recovery

Exxon's original process design showed that the low level heat below 313°F in the process gas stream is rejected to both air and water coolers. The process gas is cooled to 120°F prior to entering an ammonia scrubbing column.

The proposed improvement is to utilize the low level heat currently rejected to air for generating refrigeration[2, 3]. This is made possible by providing an ammonia-absorption refrigeration unit. This unit would have a single stage absorber and the process gas stream would be used for providing desorption heat from 313°F to 288°F.

The refrigeration load would be used primarily in the acid gas removal unit (Selexol Process), and the dry-bed unit. The latter is provided for dehydrating the process gas stream prior to entering the cryogenic SNG separation unit.

As a part of the low level heat is recovered for generating refrigeration load, part of the heat rejected is reduced, resulting in savings on cooling surfaces as well.

A preliminary cost estimate indicates that the net capital cost for equipment added versus deleted is zero. However, there would be a utility savings by reduced power requirements of packaged refrigeration units and on air coolers.

5.3 Improved Cryogenic SNG Recovery

Exxon's original design was improved by an Air Products scheme. The improvements include elimination of the cascade refrigeration unit, and replacing a fractionation column with a stripping column. These improvements were made possible by pressure letdown of the methane containing gas. The effect of auto-refrigeration plus heat exchange was sufficient to condense the bulk of the methane. Flash separation and stripping at a lower pressure than the original design effect the separation of SNG (methane) from CO and $H_2$ gas.

Further improvements over the Air Product's scheme are suggested by JPL. These improvements include replacing the letdown valve upstream of the feed drum (to the stripper) with a turbo-expander. The latter will not only extract horsepower for driving the recycle and gas compressor, but also cool the process gas stream further. This will result in savings in operating horsepower. The second improvement suggested by JPL is to use a multi-stage LNG pump to deliver the pressure required for SNG product; namely, pump the LNG up to the 1000 psi level and vaporize the remaining liquid downstream at the battery limit. This will save SNG compressors and horsepower as well.

A preliminary cost estimate indicates that the equipment cost savings would be about $2,000,000 and utility power savings would be about $4,000,000 per year.

5.4 Improved Catalyst Recovery

The catalyst is known to associate with minerals in the coal to form water-insoluble compounds. The improvement concept is to remove some of the

ash and minerals of the coal upstream of catalyst impregnation by beneficiation. Should this beneficiation prove feasible, the catalyst tie-up with the coal mineral would be reduced with the potential of increased recovery of the catalyst.

## 6.0 DEVELOPMENT STATUS DETAILS

### 6.1 Key Results From Previous Research Work

Previous Exxon sponsored research on catalytic coal gasification was performed in bench-scale units which have the capability of operating at pressures up to 1000 psig as well as in a small pilot-scale Fluid Bed Gasifier (FBG) unit with a coal feed capacity of up to 25 lbs/hr and a maximum operating pressure of 100 psig. This pressure limitation is present because the FBG was originally built for thermal gasification work. During 1975, the FBG Pilot Plant was operated with $K_2CO_3$ catalyzed Illinois coal for continuous periods of up to two weeks. Good quality data were obtained for yield periods covering a wide range of operating conditions. For many yield periods, the FBG operated with synthetic gas makeup (simulated recycle) such that inlet and outlet synthesis gas rates were in approximate balance.

Close approaches to gas methanation equilibrium were demonstrated with $K_2CO_3$ catalyst in both bench-scale units and the FBG pilot plant. Bench-scale rate data were obtained for Illinois coal with both $K_2CO_3$ and $Na_2CO_3/K_2CO_3$ catalysts. These data were combined with analytical descriptions of fluid bed contacting to develop a first-pass computer model of a fluid bed catalytic gasification reactor.

In the area of catalyst recovery, the effectiveness of a water wash for recovering about two-thirds of the catalyst was demonstrated. The forms of this recovered catalyst were identified and work was initiated on the recovery of water- insoluble catalyst. Also during this phase, engineering screening studies were carried out for commercial plants to establish preferred configurations for process flow and equipment sequencing, and to determine investment and operating costs.

## 6.2 Key Results from Predevelopment Program

### 6.2.1 Fluid Bed Gasifier (FBG) Operation

The continuous operation of the 6" x 31' fluid bed gasifier (FBG) was to simulate all commercial gasifier parameters except pressure, the effect of recycle gas rate, and the resulting effect on reaction kinetics. These parameters which were representative of expected commercial conditions include type of coal, coal size distribution, catalyst loading, reaction temperature, steam conversion, carbon conversion, fluidizing velocity, residue composition, bed density, and fluidization properties of the gasified solids. Results from the FBG operations are summarized below:

(a) The unit was used to develop fifty material balanced periods. Of these, eighteen were selected to represent a variety of process variables for detailed workup. Unit operations were of high quality. The service factor during the last six months of operation averaged more than 80% of real time, with a one-month maximum of 96%.

(b) FBG Operations confirmed the ineffectiveness of mixed sodium and potassium catalyst.

(c) Operations using recycled water soluble catalyst reached a recovery level of 94% of water soluble potassium (64% of total potassium). After approximately ten cycles of operation with recovered catalyst, no loss of activity nor any significant buildup of other constituents was observed. Pilot scale calcium digestion experiments demonstrated recovery of more than 90% of the total potassium from FBG residue. Recycle of catalyst at this recovery level will be a part of the development phase.

### 6.2.2 Bench-Scale Studies

The bench-scale research activities generated several significant results as follows:

(a) A computer model of the rate controlling reaction kinetics was developed. It describes gasification rate as a function of temperature, catalyst loading, and gas composition. Pressure is important only because it influences gas composition.

(b) Early testing of mixed sodium-potassium catalyst indicated that this system would be ineffective for reducing catalyst cost.

(c) The effort was redirected toward increasing the recovery level of the water-insoluble potassium. The most promising approach is the reaction of ash/char residue with calcium hydroxide to produce soluble potassium salts and insoluble calcium aluminum silicates. This reaction is carried out in an aqueous digestion system at relatively mild conditions. It results in an increase in catalyst recovery from about 70% with no calcium hydroxide to about 90% with ratios of calcium to potassium of the order of 0.7 moles/mole.

(d) Exposure of char to air was found to oxidize sulfides to sulfates and to inhibit the effectiveness of the water wash. Calcium digestion in the presence of CO was observed to convert some of the potassium sulfate to potassium formate.

(e) Potassium sulfide was found to be catalytically active but less effective than the hydroxide and carbonate forms when the gasifying medium is pure steam. The carbonate and hydroxide forms are equal in effectiveness.

(f) Wyoming subbituminous coal was found to be kinetically equivalent to Illinois bituminous coal in the presence of potassium catalyst.

### 6.2.3 Engineering Screening Studies

The engineering screening studies led to the following major conclusions:

(a) The preferred form of makeup catalyst for catalytic gasification is potassium hydroxide (KOH) manufactured by electrolysis of potassium chloride (KCl). Reserves of KCl in North America are very large relative to the amounts needed. Because KOH for catalytic gasification would be produced in relatively large quantities and low purities over a long term, the cost could be significantly below the current market price.

(b) With KOH at the current market price, calcium hydroxide digestion to recover water insoluble catalyst from spent gasifier solids is justified in addition to water washing to recover water soluble catalyst.

(c) The addition of a secondary gasification step to raise carbon conversion to 95% from the base level of 90% provides only a marginal economical incentive.

(d) The selective Selexol scrubbing process for acid gas removal is somewhat lower in cost than scrubbing with non-selective hot potassium carbonate or selective refrigerated methanol.

### 6.2.4 Commercial Plant Study Design

The engineering research and development efforts culminated with the preparation of a new Catalytic Coal Gasification Commercial Plant Study Design. The process bases for the Study Design were set based on the results of the laboratory and engineering studies carried out during the Predevelopment Program. The key findings of the Study Design are:

(a) The estimated total investment for a pioneer commercial plant feeding Illinois No. 6 coal and producing 257 billion Btu per stream day of substitute natural gas (SNG) is $1,530 million. This is for a January, 1978 cost level at an Eastern Illinois location. A "process development allowance" and a "project contingency" are included in this estimate, consistent with standard Exxon practices.

(b) The estimated cost of SNG produced from this pioneer gasification plant is $6.20 per million Btu ($/MMBtu). This gas cost is an initial selling price based on 100% equity financing, a 15% DCF return, and escalation rates of 6% per year for SNG revenues and 5% per year for net operating costs. On an alternative financing basis of 70% debt/30% equity with 9% interest on debt, the comparable initial gas cost is $4.70 per MMBtu.

(c) Several factors could reduce the SNG cost below the Study Design range of $4.70-6.20/MMBtu. These include larger plant capacities, surface-mined coals, increased government financial incentives, and future savings based on the learning experience gained from the pioneer plant and from further research and development.

The Study Design economics are believed to be a realistic prediction of the costs (in 1978 dollars) for a pioneer commercial plant. Caution must be used when comparing these economics with published estimates for other coal gasification processes. Such estimates can vary widely depending on the process, offsites, and economic bases, the investment estimate approach, and the maturity of the technology. It is expected that a consistent comparison with state-of-the-art gasification technology will show a significant incentive for further development of the Catalytic Coal Gasification Process.

The details on the Predevelopment Program of the CCG process have been documented in the Final Project Report on Predevelopment Program for Exxon Catalytic Coal Gasification Process dated December, 1978 prepared by Exxon Research and Engineering Company, Baytown, Texas[1].

## 6.3 Process Development Program

This program is currently in progress. Work plans and the current status are summarized in the following sections.

### 6.3.1 Overall Milestone Schedule

The overall project milestone schedule for the SNG Program is included as Figure V-2. It shows the following four major tasks from 1978 through 1981.

a. PDU Startup
b. Integrated PDU Operation
c. Bench Research and Pilot Plant Support
d. Engineering Research and Development

### 6.3.2 Status of Process Development Unit (PDU)

As of October, 1979, the PDU status is reported as follows:

(a) Sustained 165 hours of stable operation with Illinois No. 6 coal feed and steam in unit from August 10 to 17, 1979.

- 80 to 90% carbon conversion
- 1250°F and 500 psig
- Fluidized with steam and nitrogen
- Fines returned to bed by cyclone
- Run terminated by loss of liquid $N_2$ pump.

(b) Manually removed char as a water slurry.
- Activated automatic system.

(c) $H_2$ and CO supply systems ready for use in next run on a once-through basis.

(d) Gas cleanup and recycle system nearly ready.
- MEA and molecular sieve systems complete and in startup operation.

- Cryogenic fractionator in final assembly.

(e) Catalyst recovery construction underway.

### 6.3.3. CCG Development Issues

The following summarizes various CCG issues to be resolved in different stages of the development.

| Issues | Bench | PDU | LPP |
|---|---|---|---|
| o Fluid Bed Gasification | | | |
| - Lockhopper Feed System | X | X | X |
| - Gasification Reaction Rate | X | X | - |
| - Fluid Solid Contacting | - | X | X |
| - Properties of Steady-state Char | X | X | - |
| - Fines Generation | - | X | X |
| o Gas Recycle Loop | | | |
| - Preheat Furnace | X | X | - |
| - Cryogenic Separation | X | - | - |
| - Trace Components Build-up | - | X | - |
| o Catalyst Addition and Recycle Loop | | | |
| - Trace Components Build-up | X | X | - |
| - Fines Generation | X | X | - |
| - Solid-Liquid Separation | X | X | X |
| - Solid Disposal | X | X | X |
| - Water Wash vs. $Ca(OH)_2$ Digestion | X | X | - |

### 6.3.4 Research Studies Planned for 1979

The following items are the research efforts planned for 1979.

(a) Catalyst Loop Research

- Costs of concentrating dilute catalyst solutions by evaporation.
- Evaluation of alternative solid-liquid separation methods.
- Evaluation of tradeoffs between number of stages, concentrations, and recovery.
- Catalyst addition process configuration studies.

(b) Gasification-Recycle Gas Loop Research

- Identification of preferred gasifier operating conditions.
- Identification of technical uncertainties and data needs associated with trace impurities.
- Evaluation of improved gas separation schemes.

### 6.3.5 Engineering Technology Studies

The following lists the engineering study efforts planned for the CCG process.

(a) Catalytic Gasifier Solids Balance Model

- Modify proprietary computer model for use with CCG.
- Validate model with available PDU data.

(b) Wet Scrubber Operability and Performance.

- Evaluate interfacial properties of CCG solid-liquid streams.
- Carry out lab studies on wet scrubber performance.

(c) Slurry Rheology and Solid-Liquid Separations for Catalyst Recovery.

- Identify and evaluate solid-liquid separation alternatives.
- Measure viscosity of char-catalyst slurries.

(d) Vapor-Liquid Equilibria in Sour Water/Catalyst Systems.

- Review data needs to establish deficiencies
- Undertake experimental program as needed to improve data base.

(e) Physical and Thermodynamic Properties of Catalyst Recovery Solutions.

- Establish likely data needs.
- Collect and evaluate available data.

(f) Dynamic Simulation of CCG Reactor System.

- Develop dynamic process control
- Determine response to changes in major variables.

(g) Environmental Control: Water and Solid Effluents.

- Characterize and evaluate waste water streams from PDU.
- Identify treatment alternatives.

(h) Environmental Control: Atmospheric Emissions.

- Identify and quantify emissions through PDU testing.
- Identify control alternatives.

(i) Preheat Furnace Tube Selection.

- Evaluate carbonization behavior of selected tube materials.
- Screen and select projected commercial furnace tube materials.

(j) Evaluation of Construction Materials for Catalytic Gasification.

- Test and evaluate materials for CCG in PDU.

### 6.3.6. PDU Flow Diagram

Included as Figures V-3 through V-5 are the PDU flow diagram, PDU gas separation section, and cryogenic methane separation scheme in the PDU, respectively.

## 7.0 REFERENCES

(1) Kalina, T. and Nahas, N. C., "Exxon Catalytic Coal Gasification Process - Predevelopment Program," Final Project Report, prepared by Exxon Research and Engineering Company for the U. S. DOE under Contract No. E(49-18)-2369, December 1978.

(2) Carpenter, D. J. and Thomas, D. A., "Low-Grade Refinery Heat Recovery Merits Attention," Oil and Gas Journal, January 28, 1980.

(3) Holdorff, G., "Revisions Up Absorption Refrigeration Efficiency," Hydrocarbon Processing, July 1979.

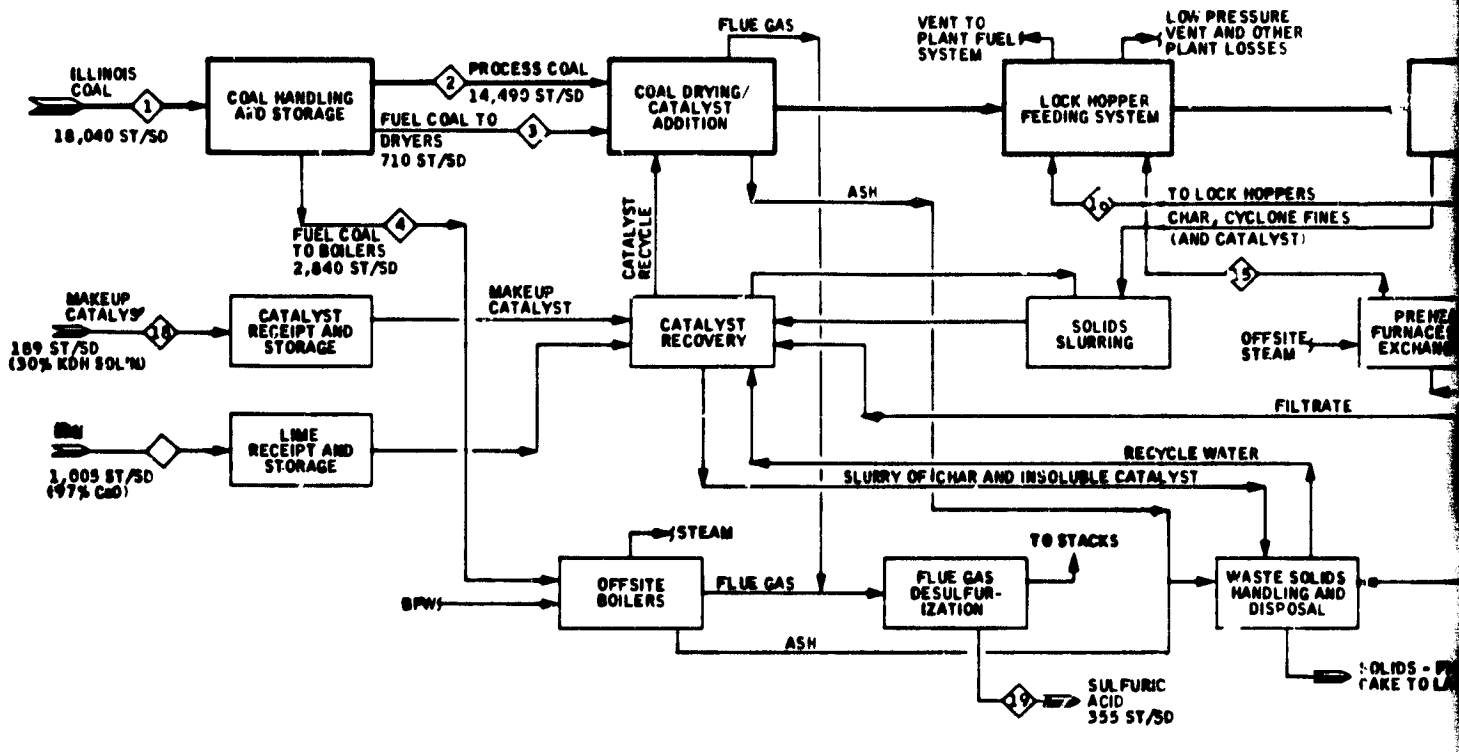


| STREAM No. | 1 | 2 | 3 | 4 | 5 | 6 | 7 | 8 | 9 | 10 |
|---|---|---|---|---|---|---|---|---|---|---|
| STREAM NAME | COAL FEED TO PLANT | COAL FEED TO PROCESS PLANT | FUEL COAL TO DRYERS | FUEL COAL TO BOILERS | GASIFIER PRODUCT GAS | CHAR QUENCH EFFLUENT | PROCESS GAS TO ACID GAS REMOVAL | TREATED GAS TO SNG SEPARATION | $CH_4$ FOR FUEL AND REFRIG MAKEUP | SNG PRODUCT |
| COMPONENTS, lb-mol/hr | | | | | | | | | | |
| CO | - | - | - | - | 9,655 | 858 | 10,510 | 10 502 | 2 | 28 |
| $CO_2$ | - | - | - | - | 22,765 | 4 | 21,633 | 44 | - | - |
| $H_2$ | - | - | - | - | 34,597 | 3,082 | 37,671 | 37.665 | - | - |
| $CH_4$ | - | - | - | - | 35,196 | 470 | 35,657 | 35 300 | 1,611 | 27,942 |
| $C_2H_6$ | - | - | - | - | 5 | - | 5 | 3 | - | 3 |
| $H_2S$ | - | - | - | - | 947 | - | 878 | . | - | - |
| COS | - | - | - | - | 14 | - | 2 | . | - | - |
| $NH_3$ | - | - | - | - | 1,180 | - | - | . | - | - |
| $N_2$ | - | - | - | - | 3,292 | 293 | 3,585 | 3,585 | - | - |
| SUBTOTAL - DRYGAS | - | - | - | - | 107,651 | 4,707 | 109,941 | 87,199 | 1,613 | 27,973 |
| $H_2O$ | - | - | - | - | 51,380 | 1,045 | 416 | 12 | - | - |
| TOTAL GAS, lb-mol/hr | - | - | - | - | 159,031 | 5,752 | 110,357 | 87,211 | 1,613 | 27,973 |
| Mlbs/hr | - | - | - | - | 2,978 | 65 | 2,033 | 1,039 | 26 | 449 |
| SOLIDS, M lbs/hr | | | | | | | | | | |
| MAF (COAL, CHAR, etc) | - | - | - | - | - | - | - | | - | - |
| ASH (MINERAL MATTERS) | - | - | - | - | - | - | - | | - | - |
| TOTAL SOLIDS, Mlbs/hr | 1,503 | 1,207 | 59 | 237 | - | - | - | | - | - |
| TOTAL (GAS & SOLIDS), Mlbs/hr | 1,503 | 1,207 | 59 | 237 | 2,978 | 65 | 2,003 | 1,039 | 26 | 449 |
| MMSCFD - GAS | - | - | - | - | 1,448.45 | 52.39 | 1,005.13 | 793.41 | 14.69 | 251 |
| MOLE WEIGHT - GAS | - | - | - | - | 18.73 | 11.30 | 18.42 | 11.93 | 16.06 | 16 |
| TEMPERATURE, °F | | | | | 1,275 | 600 | 120 | 2 | 105 | 120 |
| PRESSURE, psia | | | | | 500 | 500 | 450 | 440 | 45 | 1,015 |

FOLDOUT FRAME

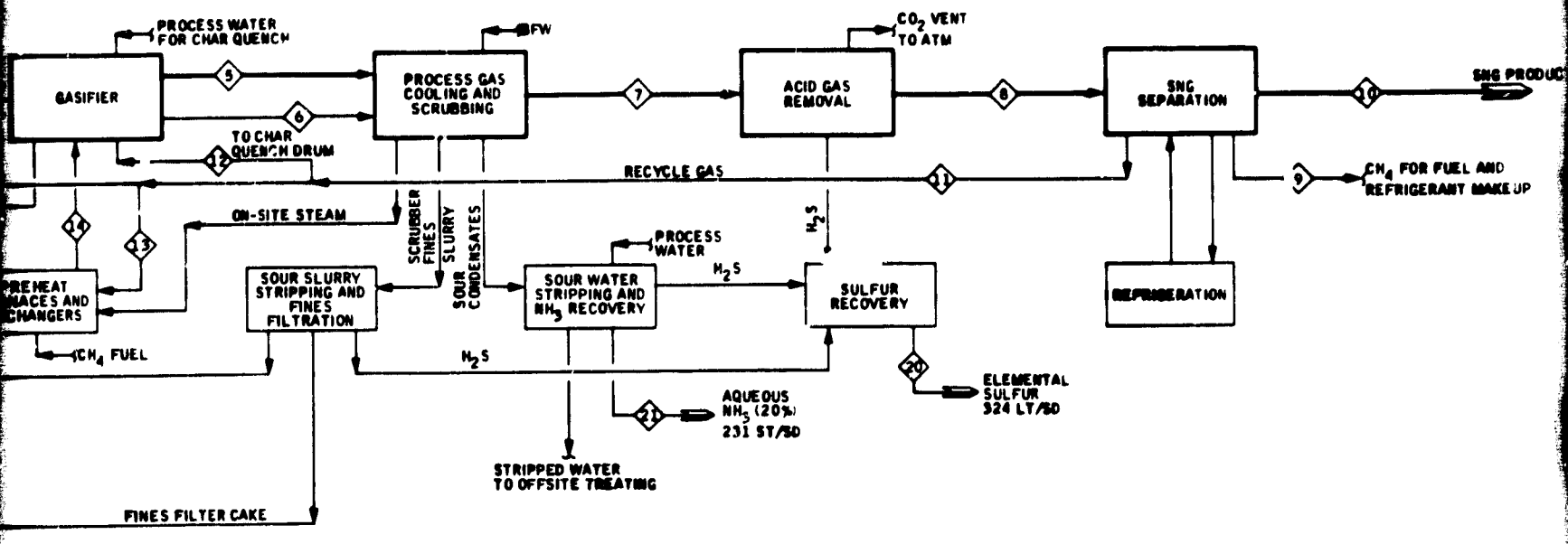


DS - FILTER
S TO LAND FILL

SEE NOTE (1)

| 10 | 11 | 12 | 13 | 14 | 15 | 16 | 17 | 18 | 19 | 20 | 21 |
|---|---|---|---|---|---|---|---|---|---|---|---|
| SNG PRODUCT | TOTAL RECYCLE GAS | RECYCLE GAS TO CHAR QUENCH DRUM | RECYCLE GAS TO PREHEATER | STEAM AND RECYCLE GAS TO GASIFIER | RECYCLE GAS TO FEED COAL | RECYCLE GAS TO LOCK HOPPERS | LIME FEED TO PLANT | CATALYST MAKEUP | SULFURIC ACID BYPRODUCT | RECOVERED ELEMENTAL SULFUR | AQUEOUS AMMONIA |
| 28 | 10,472 | 858 | 9,205 | 6,308 | 1,300 | 409 | - | - | - | - | - |
| - | 44 | 4 | 37 | 1,629 | 5 | 3 | - | - | - | - | - |
| - | 37,665 | 3,082 | 33,094 | 30,017 | 4,674 | 1,489 | - | - | - | - | - |
| 7,942 | 5,747 | 470 | 5,050 | 4,337 | 713 | 227 | - | - | - | - | - |
| 3 | - | - | - | - | - | - | - | - | - | - | - |
| - | - | - | - | - | - | - | - | - | - | - | - |
| - | - | - | - | - | - | - | - | - | - | - | - |
| - | - | - | - | - | - | - | - | - | - | - | - |
| - | 3,885 | 293 | 3,150 | 2,705 | 445 | 142 | - | - | - | - | - |
| 7,973 | 57,513 | 4,707 | 50,536 | 44,996 | 7,137 | 2,270 | - | - | - | - | - |
| - | 12 | 1 | 11 | 86,008 | 2 | - | - | - | - | - | - |
| 7,973 | 57,525 | 4,708 | 50,547 | 131,004 | 7,139 | 2,270 | - | - | - | - | - |
| 449 | 564 | 64 | 496 | 2,004 | 70 | 22 | - | - | - | - | - |
| - | - | - | - | - | - | - | - | - | - | - | - |
| - | - | - | - | - | - | - | - | - | - | - | - |
| - | - | - | - | - | - | - | 84 | 16 | - | - | - |
| 449 | 564 | 64 | 496 | 2,004 | 70 | 22 | 84 | 16 | 30 | 30 | 19 |
| 254.78 | 523.94 | 42.88 | 460.38 | 1,193.18 | 65.02 | 20.68 | - | - | - | - | - |
| 16.06 | 9.81 | 13.63 | 9.81 | 15.30 | 9.80 | 9.78 | - | - | - | - | - |
| 120 | 175 | 175 | 175 | 1,543 | 800 | 175 | | | | | |
| 1,015 | 600 | 520 | 600 | 520 | 555 | 555 | | | | | |

FOLDOUT FRAME 2

| LTR | ZONE | DESCRIPTION | | | | | |
|---|---|---|---|---|---|---|---|
| A | | INITIAL RELEASE | | SEE TITLE BLOCK | | | |
| | | | | | | | |
| | | | | | | | |
| | | | | | | | |

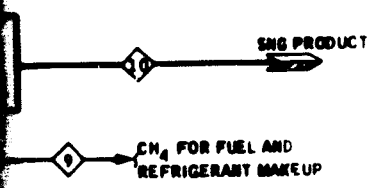


NOTE:
(1) 1,597 mol/hr REACTED BY WATER-GAS SHIFT REACTION IN THE PREHEAT FURNACES.

| |
|---|
| 21 |
| QUE GJS MMONIA |
| |
| |
| |
| |
| |
| |
| |
| |
| |
| |
| |
| |
| 19 |
| |
| |

FOLDOUT FRAME 3

**JET PROPULSION LABORATORY**
CALIFORNIA INSTITUTE OF TECHNOLOGY
PASADENA, CALIFORNIA
RELEASED THROUGH SECT. 345

PROCESS BLOCK FLOW DIAGRAM
EXXON CATALYTIC COAL
GASIFICATION PROCESS

| SIZE | CODE IDENT NO | | REV |
|---|---|---|---|
| J | 23835 | FIGURE V-1 | |
| SCALE | | SHEET OF | |

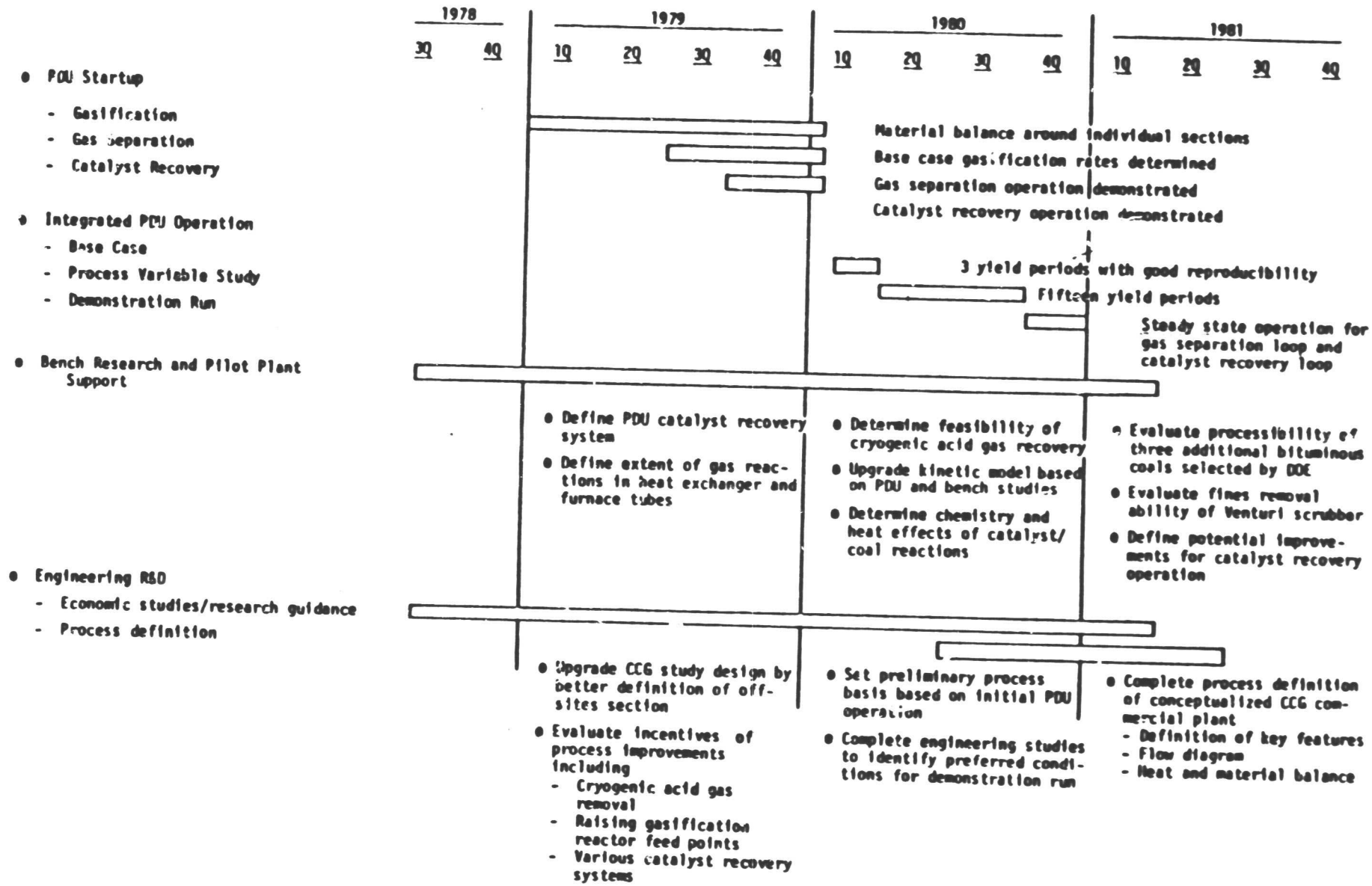


FIGURE V-2. Proposed Revised Schedule for SNG Program



PRECEDING PAGE BLANK NOT FILMED

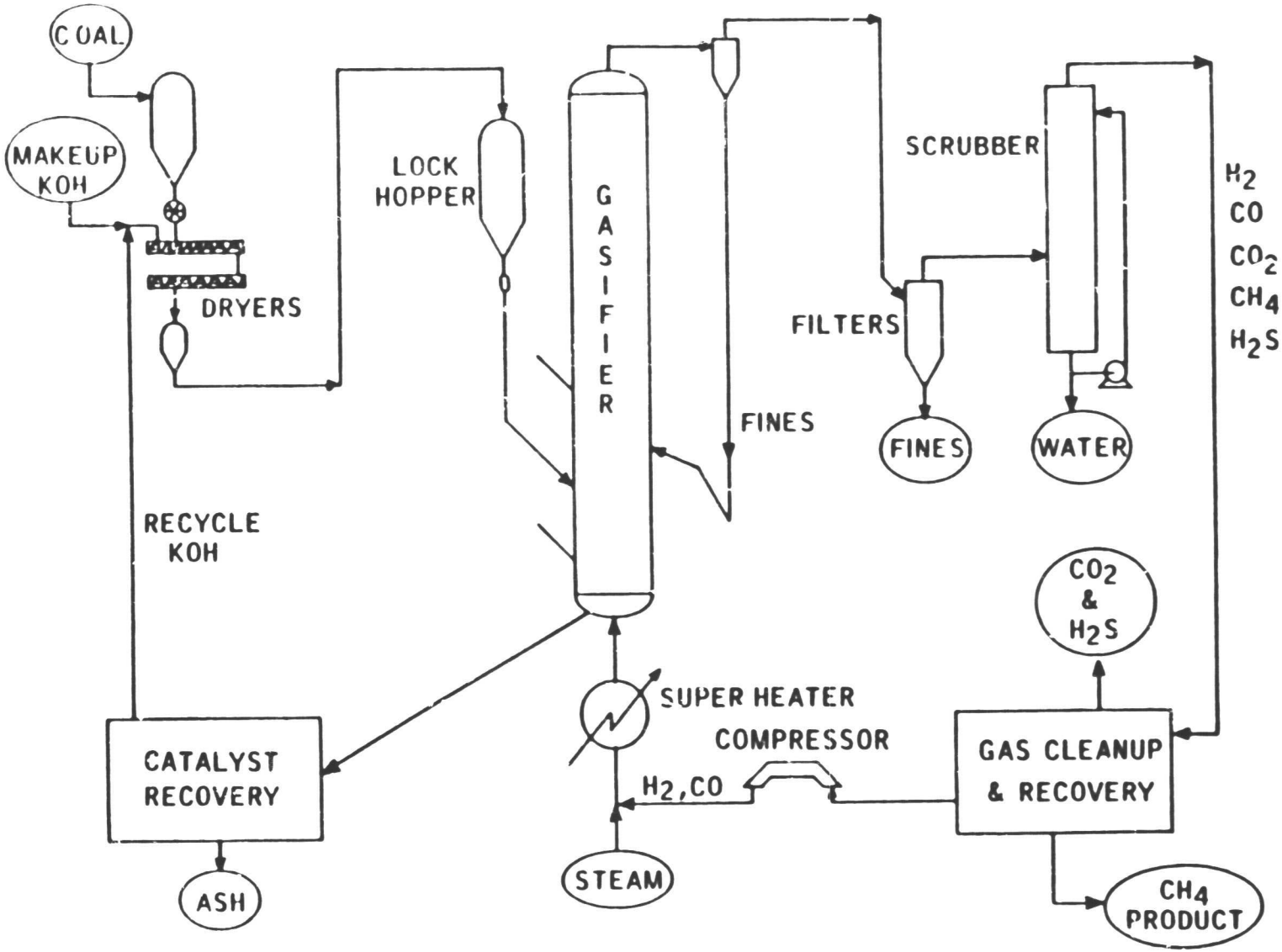


FIGURE V-3. Exxon CCG PDU Flow Diagram.

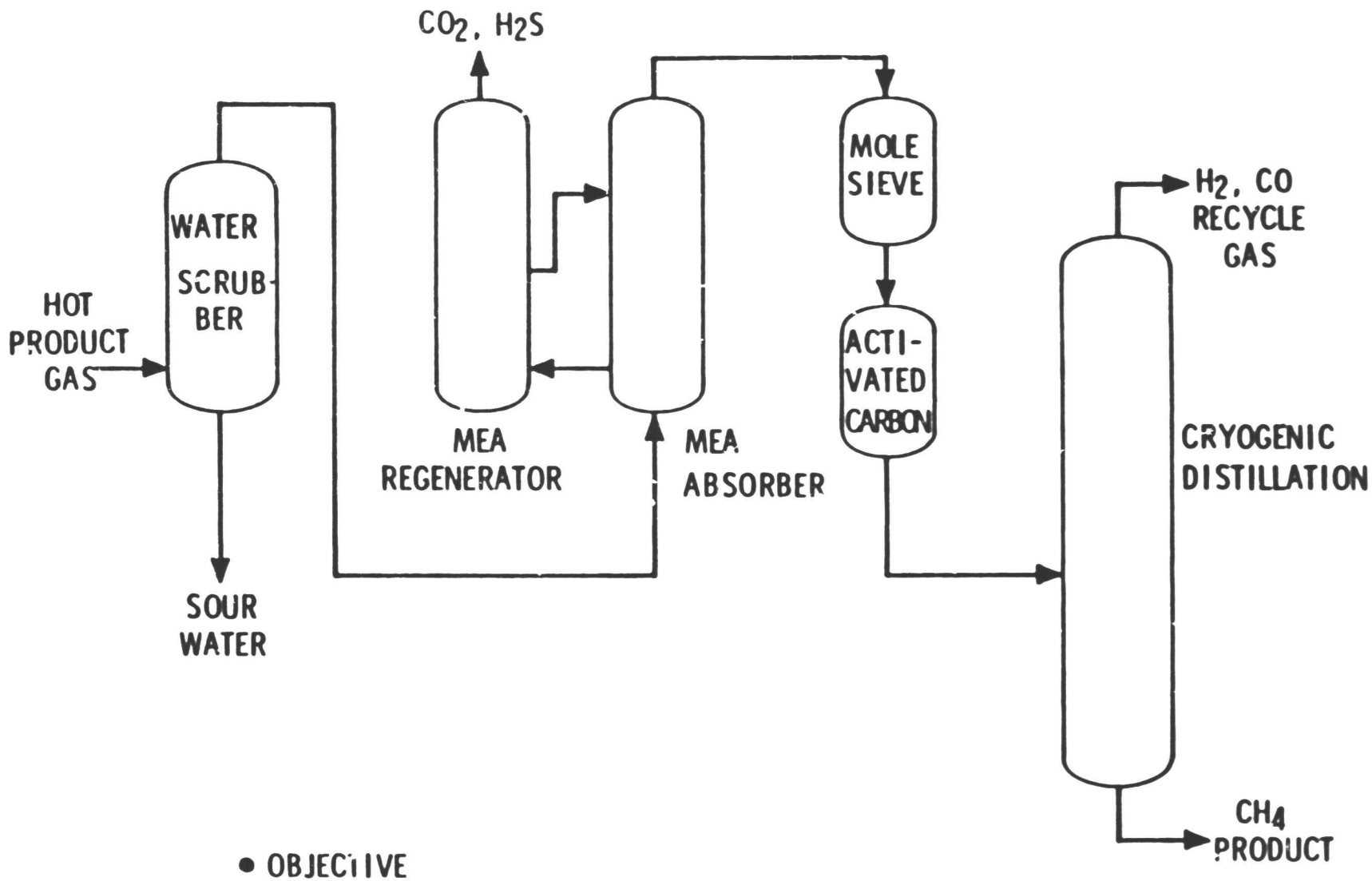


- OBJECTIVE
  - DEMONSTRATE OPERABILITY
  - MEASURE BUILDUP OF TRACE COMPONENTS

FIGURE V-4. Exxon CCG Gas Separation System

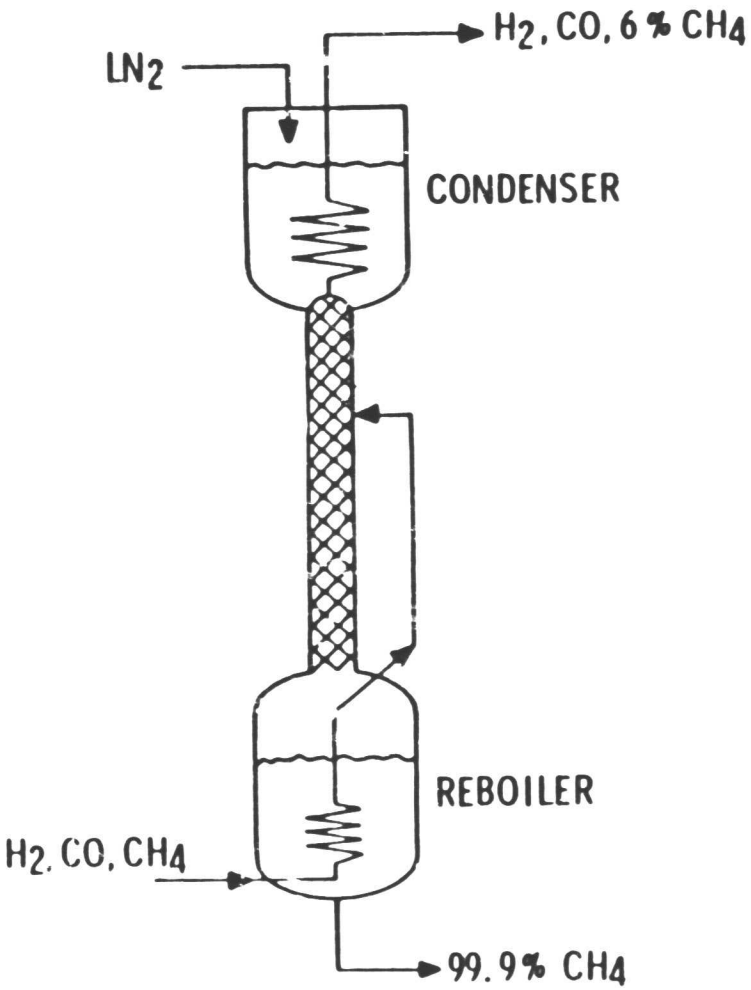


- SMALL UNIT TESTS SUCCESSFUL
  - SIMULATED FEED GAS
  - PRODUCT SPECIFICATIONS MET
  - DEMONSTRATED HEAT INTEGRATION
  - SMOOTH OPERATION
- BASIS FOR SETTING PROCESS DEVELOPMENT UNIT DESIGN

FIGURE V-5. Exxon CCG Cryogenic Distillation of Methane