N O T I C E

THIS DOCUMENT HAS BEEN REPRODUCED FROM MICROFICHE. ALTHOUGH IT IS RECOGNIZED THAT CERTAIN PORTIONS ARE ILLEGIBLE, IT IS BEING RELEASED IN THE INTEREST OF MAKING AVAILABLE AS MUCH INFORMATION AS POSSIBLE

NASA CONTRACTOR REPORT 137805

(NASA-CR-137805) INTEGRATION OF A CODE FOR AEROELASTIC DESIGN OF CONVENTIONAL AND COMPOSITE WINGS INTO ACSYNT, AN AIRCRAFT SYNTHESIS PROGRAM Final Report, 1972 - 1974 (Nielsen Engineering and Research, Inc.) HC A07/MF A01 N82-16069 Unclas G3/05 07353

INTEGRATION OF A CODE FOR AEROELASTIC DESIGN OF CONVENTIONAL AND COMPOSITE WINGS INTO ACSYNT, AN AIRCRAFT SYNTHESIS PROGRAM

Joseph Mullen, Jr.

Contract NAS2-8558
May 1976

JAN 1982
RECEIVED
NASA STI FACILITY
ACCESS DEPT.

NASA

NASA CONTRACTOR REPORT 137805

INTEGRATION OF A CODE FOR AEROELASTIC DESIGN OF CONVENTIONAL AND COMPOSITE WINGS INTO ACSYNT, AN AIRCRAFT SYNTHESIS PROGRAM

Joseph Mullen, Jr.
Nielsen Engineering & Research, Inc.
510 Clyde Avenue
Mountain View, California 94043

Prepared for
Ames Research Center
under Contract NAS2-8558

National Aeronautics and
Space Administration

Ames Research Center
Moffett Field, California 94035

PRECEDING PAGE BLANK NOT FILMED

TABLE OF CONTENTS

Section	Page No.
SUMMARY	1
INTRODUCTION	1
SYMBOLS	2
PROGRAM METHODOLOGY	4
F-5A/B CORRELATIONS	5
Summary of F-5 Geometry and Flight Conditions	6
Equivalent Core Properties	8
Surface Fit of F-5A/B Thickness Distribution	9
Calculation of External Loads	11
Comparison of Assumed Loads with F-5A/B	15
Deflections	17
Summary of F-5 Analysis of Surface Fit Material Distribution	17
Redesign of F-5 Thickness Distribution	18
GENERAL WEIGHT CORRELATION	19
Aircraft Used in Weight Regression	20
Regression Analysis	21
Regression Results for Isotropic Wing Design	22
Regression Results for Composite Material Wing Design	23
INTEGRATION OF WADES PROGRAM INTO ACSYNT	24
Operation in ACSYNT Overlay Structure	24
Geometry Interface with ACSYNT	26
Loads Interface	26
Optional Material Properties	28
Special Version of CONMIN	29
Conversion of F-5A/B with ACSYNT	29

TABLE OF CONTENTS (CONCLUDED)

Section	Page No.
WADES PROGRAM DOCUMENTATION	30
Description of Parameters	31
Wing geometry	31
Thickness and depth functions	32
Material property definition	34
Loads	35
Behavioral constraints	38
Geometric constraints	38
Options and integer control variables	40
Description of Sample Input	40
Description of Output	41
Program and Subprogram Descriptions	43
Use of Modified Strip Loading Routines	55
Description of Modified Strip Loading Routines	56
Use of Supersonic Piston Theory Loads	58
Implementation on the Computer	58
CONCLUSIONS AND RECOMMENDATIONS	59
TABLES I THROUGH X	63
FIGURES 1 THROUGH 26	73
APPENDIX A - CALCULATION OF F-5 EQUIVALENT CORE PROPERTIES	110
APPENDIX B - CALCULATION OF F-5 MARGINS OF SAFETY AND SURFACE FIT OF UPPER WING SKIN-THICKNESS DISTRIBUTION	117
APPENDIX C - STIFFNESS FORMULATION OF SUBSONIC STEADY-STATE WING LOADING	127
REFERENCES	137

INTEGRATION OF A CODE FOR AEROELASTIC DESIGN OF CONVENTIONAL AND COMPOSITE WINGS INTO ACSYNT, AN AIRCRAFT SYNTHESIS PROGRAM

By Joseph Mullen, Jr.
Nielsen Engineering & Research, Inc.

SUMMARY

The integration, correlation, and documentation of the program for Wing Aeroelastic Design (WADES) of conventional and composite wing structures for use with the aircraft synthesis program ACSYNT is described. A comparison of program estimates of wing weight, material distribution, structural loads and elastic deformations with actual Northrop F-5A/B data is presented. Correlation coefficients obtained using data from a number of existing aircraft are computed for use in vehicle synthesis to estimate wing weights.

The modifications necessary to adapt the WADES code for use in the ACSYNT program are described. Basic program flow and overlay structure is outlined. An example of the convergence of the procedure in estimating wing weights during the synthesis of a vehicle to satisfy F-5 mission requirements is given. A description of inputs required for use of the WADES program is included. Possible extensions and modifications of the structural model and analysis methods are identified where improvements in overall weight prediction and correlation with existing aircraft may be obtained.

INTRODUCTION

From 1972 to 1974, under the sponsorship of the National Research Council, structural optimization techniques were developed for the design of simplified conventional and multilayered composite wings for strength, stiffness, frequency, and flutter requirements. A computer program for wing aeroelastic design (WADES) was generated as the result of that investigation. The desirability of incorporating this capability into aircraft synthesis was identified so that the full impact of advanced concepts could be studied. Under Contract No. NAS2-8558* to NASA/Ames Research Center, Nielsen Engineering & Research, Inc. (NEAR) was funded

*Technical Monitor: Dr. G. N. Vanderplaats.

to incorporate the WADES program into ARC's ACSYNT program for vehicle synthesis. This is a final report summarizing that work.

The primary purpose of this report is to present the results of the correlations and of the integration of the WADES program as a module in the ACSYNT program. A user's guide for the operation of the program is also included. Detailed comparisons of estimated weights, material distributions, and general assumptions with those of the F-5A/B wing are contained in this report. Correlation of the program-estimated weights with a broader group of U. S. fighter aircraft wing weights is also summarized. The program integration into ACSYNT was completed, and the results of a sample vehicle study are shown.

SYMBOLS

[A]	matrix containing the aerodynamic influence coefficients
[B]	matrix containing the unsteady aerodynamic influence coefficients as derived for piston theory
b/2	semispan
$c(\xi,\eta)$	polynomial function describing the shape of the wing camber surface
$d(\xi,\eta)$	polynomial function describing the wing semi-depth distribution
E_x, E_y	arthotropic moduli of elasticity in x- and y-directions, respectively
F_{lg}	force on the landing gear on ground impact
g	acceleration due to gravity
$\{g\}$	vector of design constraints
GLR	gross lift required
G_{xy}, G_{xz}, G_{yz}	orthotropic shear moduli of elasticity in respective coordinate plane
h	altitude
$[K_R]$	reduced stiffness matrix
M_o	free-stream Mach number

[MX]	consistent mass matrix
M_x, M_y	bending and torsional moments about structural axis
M'_x, M'_y	bending and torsional moments along airplane x,y reference axes
N_z	load factor
p_a	distributed aerodynamic pressure loading
P_{lift}	fraction of lift on wings at landing as fraction of total weight of vehicle
p_o	free-stream static pressure
$p_{s,c,f}$	distributed inertial loadings due to skin, core, and fuel
PVA	fraction of volume of structural planform available for fuel
$\{Q\}_{a,w,cm}$	work equivalent load vectors due to aerodynamic, distributed loadings, and concentrated mass loadings
SGW	stress gross weight
S_{wg}	wing planform area
$t(\xi,\eta)$	polynomial function describing the thickness of the skin over the wing planform
t/c	wing depth to chord ratio
t_{eff}	"effective" skin thickness including distributed thickness of spar caps
t_{skin}	skin thickness of wing cover sheets only
$\{u\}$	displacement vector
V_z	shear load normal to wing surface
$w(\xi,\eta)$	function describing the transverse deformed shape of the wing
W	total weight
W_{body}	total weight, all components located in the body
W_{cm}	weight of concentrated mass
W_{fuel}	weight of fuel located in wings

WGTO	vehicle gross weight at takeoff
W_{lg}	weight of main landing gear
W_{wing}	weight of wing
x,y,z	spatial coordinates of wing
x/c	local streamwise fraction of chord
x_{cm}, y_{cm}	coordinates of concentrated masses
x_{cg}	location of total weight as a percent of mean aerodynamic chord
α	function describing the internal structural rotations about the y-axis
α_o	root angle of attack of wing
β	function describing the internal structural rotations about the x-axis
Λ	angle of sweep of wing quarter chord
ξ, η	nondimensionalized coordinates of the wing; $\xi = y/R$ and $\eta = y/SPAN$
θ_{LE}, θ_{TE}	leading-edge and trailing-edge sweep angles for wing
σ_x, σ_y	in-plane stress components in x- and y-directions
$\tau_{xy}, \tau_{xz}, \tau_{yz}$	shear stress components in respective coordinate plane
ω	dynamic frequency

PROGRAM METHODOLOGY

The program used in the following study is the computer code for Wing Aeroelastic Design (WADES) developed under the sponsorship of the National Research Council. The program was developed for the preliminary design of conventional and multilayered composite aircraft wings to satisfy strength, stiffness, dynamic and flutter requirements. It models the structure of the wing as an equivalent orthotropic plate. The skin material distribution airfoil depth, and internal structure (core) are approximated by polynomial functions that are continuous over the planform of the structure. The various static, dynamic and flutter analysis are performed using a Ritz type analysis with assumed polynomial modes. The program contains subsonic and

supersonic aerodynamic and inertial static loads. Supersonic piston theory unsteady aerodynamics are used for flutter calculations.

The design algorithms used in the WADES program are based on the mathematical programming technique known as the Method of Feasible Directions. The program employs either a direct search algorithm for the combined strength and dynamically constrained wing design, or a more efficient iterative procedure which uses a sequence of nonlinear approximate designs to converge on the least-weight design for strength constraints only. In each of these search techniques the parametric nature of the constraints on strength and minimum gage is converted to explicit form by evaluation only at discrete points on the structural planform. The program searches for the minimum weight material distribution by searching for the optimum combination of the coefficients of the functions describing the material distribution and their orientation for fibrous composites.

F-5A/B CORRELATIONS

The detailed comparison of skin-thickness distribution, estimated loads and structural response used in the WADES design process with those of the F-5A/B fighter aircraft was first undertaken. This vehicle was chosen to coincide with the ongoing Computer Aided Design Report and Evaluation Study (CADRES) currently being conducted by the Advanced Vehicle Concepts Branch at NASA/Ames Research Center. It is the intent of this section to validate the assumptions concerning the externally applied loads and forces and to compare the material distributions and weights obtained in the following analysis and design with those of an actual aircraft. In this manner a detailed breakdown can be obtained of the factors contributing to discrepancies in the estimation of primary structural weight. From this information both nonoptimum weight coefficients and areas of analysis or design improvements are identified.

In response to a request for structural design information to Northrop Corporation, Aircraft Division, a number of pertinent reports were obtained from Stanley R. Murnane, Manager, F-5A/B Structural Analysis. These reports contained information on the F-5 mass and moment of inertia distributions, flutter tests, wing section properties, shear flow and bending stress distributions, weight and loads data, and tip deflection data. The reports containing this information are listed in references 1 through 9.

The F-5A/B correlations are developed generally along the following lines: first, comparisons of results from a simplified model with the

analysis of the actual configuration and its resulting response; and second, correlations of the results from a redesign using the same geometric model and externally applied loads. In the first part, the F-5 structural planform and substructure properties were approximated, and three critical flight conditions were selected. The upper skin-thickness distribution was then surface fit with the approximate polynomial function to be used in the WADES program to analyze the wing. A separate lower skin design was not considered. The program assumes equal upper and lower skin thicknesses that are computed using an average of the tensile and compressive allowable stresses. Actual and approximate wing parameters were compared. In the second part, this same configuration was redesigned to satisfy the load requirements of the first part. The same comparisons with the wing parameters of the F-5 were made again. The details and comparisons of this procedure follow.

Summary of F-5 Geometry and Flight Conditions

Selection of the geometric model and the choice of the critical flight conditions for analysis and design of the F-5A/B structure are sensitive factors if accurate correlations are to be obtained. Because of the current restriction of the WADES program to trapezoidal wing and structural planforms, the design tends to be very sensitive to the placement of the structure itself. Similarly, the selection of the critical loading condition directly affects the resulting weight estimate. The choice of these loading conditions is often a function of many of the parameters in the mission requirements. The particular geometric and flight loading conditions used in this comparison to represent the F-5A/B are described here.

The particular choice of the structural model of the F-5 depends upon the positioning of the internal and external configuration of the wing. Figure 1 is a cutaway pictorial representation of both the structural and non-structural components that make up the F-5 wing. It can be seen that the choice of the structural planform is affected by the positioning of both the leading-edge and trailing-edge flaps and the volume of the wing that is occupied by the landing gear and aileron operating mechanism.

Figure 2 is the structural idealization used by Northrop in the generation of their internal loads (ref. 2). Superimposed on that figure

also is the structural planform used by the WADES program to model the F-5. Because it was desired to include the wing carry-through structure in the analysis, the structural planform was restricted to between the 15-45-percent chord lines. The nominal extension of the wing tip beyond Wing Station (WS) 142.6 was derived from the baseline choice of the F-5 semispan to be 151.5 inches with the inclusion of the Sidewinder (AIM-9B) missile on the wing tip. This choice of the structural planform was considered to best model the load paths of the major bending loads into the fuselage.

The major discrepancies of this model are the neglect of additional structural material aft of the 44-percent chord line and the misrepresentation of the wing-fuselage junction. The first restriction in modeling of the structure represents a 27-percent reduction in equivalent structural planform area if only that additional structure outboard of WS 101 is counted and a 44-percent area reduction if the additional material outboard of WS 26 is included. The second restriction at the wing-fuselage junction has a twofold effect. It distributes the aerodynamic pressure loading over an increase in exposed wing area (27 percent in the case of the F-5), and it reacts the resulting shear load at the airplane centerline rather than at the wing-body intersection.

A summary of the F-5A/B wing geometry used in this study is given in Table I. The theoretical root chord and semispan were obtained from the baseline configuration in reference 10. It is also noted that the F-5 stores no fuel in the wing.

The flight conditions used in the correlations with the F-5 were chosen to satisfy the critical symmetric maximum wing bending and landing loads encountered. Because of internal program restrictions only three simultaneous loading conditions derivable from static equilibrium may currently be used in a single design sequence. A summary of the three critical flight conditions used is found in Table II.

These loading conditions were derived from a combination of information in references 1, 7, and 10. The first two loading conditions reflect the identification of the symmetric pull-up and dynamic landing conditions in the Group Weight Statement (ref. 10) as being critical. The Wing Stress Analysis (ref. 1) identified the first condition as being critical for wing stations inboard of WS 114. The second condition was critical in sizing of components in the region of the main landing gear trunion. The

third condition, a symmetric pull-up at sea level, was also identified in reference 1 as critical inboard of WS 64 as a result of flight testing. The particular arrangement of external stores on the wing for these flight conditions was primarily obtained from information in the F-5A/B Wing Design Loads (ref. 7).

Reference 1 identified points outboard of WS 85 as being critical for several different dynamic store ejection conditions. These were not included in this analysis because of WADES' inability to reproduce the dynamic loading profile. The use of a negative landing gear weight in the second condition was implemented in order to obtain a statically equivalent impact load on the landing gear strut. The use of a non-zero value for the concentrated loads is indicative of the positioning of the appropriate external store at that wing location.

Equivalent Core Properties

The WADES program does not include a resizing algorithm for the core (substructure) properties. The program allows for the input of equivalent distributed properties. These equivalent material constants may be obtained directly from such materials as aluminum honeycomb or by the calculation of a distributed modulus for s spar-rib type of construction.

Since the F-5A/B used a spar-rib type of internal construction, an equivalent density and set of orthotropic moduli were derived to give the model the approximate stiffness and weight properties of the actual aircraft. To facilitate the development of some average-distributed properties the following assumptions were made:

- The equivalent material constants to be computed for a trapezoidal plate in bending with semi-depth, $d(\xi,\eta)$, are E_x, E_y, G_{xy}, G_{xz}, G_{yz}, and ρ core.
- The relations between actual and distributed core cross sections for each of the component moduli are

Equivalent Distributed Cross Section	Actual F-5
$(E_xI_y)_c$	$(EI_y)_{ribs} + (EI_x)_{spars}\sin^4\theta_s$
$(E_yI_x)_c$	$(EI_x)_{spars}\cos^4\theta_s$

Equivalent Distributed Cross Section	Actual F-5
$(G_{xz}A_y)_c$	$(GA_x)_{\text{rib webs}}$
$(G_{yz}A_y)_c$	$(GA_y)_{\text{spar webs}}\cos^2\theta_s$

with $G_{xyc} = 0$, and where θ_s = sweep angle at $x/c = 0.35$.

- The average F-5 cross-sectional properties between WS 64 and WS 89 are used to compute equivalent properties in the y-direction.
- The average cross-sectional properties at $x/c \approx 0.4$ are used to compute equivalent properties in the x-direction.
- In the calculation of equivalent bending moduli, both the flange and web material in the spars and ribs are used.
- In the calculation of equivalent transverse shear moduli, only the web material of spars and ribs are used.
- The equivalent weight density is obtained by averaging the estimated weight of the spars and ribs over the net volume of the WADES structural planform.

The calculation of the distributed material constants for the core of the F-5 used representative dimensions obtained from reference 1. A summary of the estimated equivalent core properties is found in Table III. The details of the calculations and the values used are found in Appendix A.

Surface Fit of F-5A/B Thickness Distribution

To best evaluate the ability of the WADES program to predict both the required material distribution and its corresponding weight in comparison with the actual F-5 data, a function was fitted to the actual upper wing skin-thickness distribution. A special-purpose program was written to compute the least-squares fit of a ten-term polynomial function used to describe the distributed skin thickness. The actual skin-thickness values were obtained for representative locations on the structural planform from the summary table of the critical wing loadings in reference 1. The details of the calculation of the least-squares fit are found in Appendix B.

The resulting functional fit of the actual F-5 skin-thickness distribution is shown in figure 3. Only the basic skin thickness, without the additional material due to the presence of spar and rib caps, has been included in this fit. The contours represent the shape of the resulting surface fit. A detailed comparison of the actual and calculated values at the input locations is in Appendix B. With this functional fit, a complete analysis of the F-5 was performed without resizing.

For the previously described structural planform geometry and core properties, the calculated value of only the structural weight was 507 lbs for both wings. This compares to an actual structural weight for the F-5A/B of 838 lbs, excluding flap and aileron weights. The calculated weight breaks down into 286 lbs for skin material and 221 lbs for core (substructure) weight. This computed weight results in a 1.65 non-optimum weight factor based on the ratio of actual structural weight to computed structural weight. If the flaps and other attachments are included, the ratio of the total wing weight to that computed becomes 2.05.

Since this computed weight was quite low as compared with the actual F-5 wing weight, it was further decided to estimate the effect on the computed weights and responses of including the additional material in the spar caps and skin-spar attachments. To do this an "effective" skin thickness, t_{eff}, was formulated, and a surface fit of this material distribution was made. The effective skin thickness was defined to be that thickness which would contain the same average cross-sectional area as the original skin/spar-cap combination. The equation used to compute t_{eff} is

$$t_{eff} = t_{skin} + \frac{\Delta t_{caps} \cdot w_{av}}{b} \tag{1}$$

where t_{skin} is the local panel skin thickness, Δt_{caps} is the nominal thickness of the extra material in the spar caps and spar attachments, w_{av} is the average width of the spar caps, and b is the local width of a panel over which the spar cap is to be distributed. A nominal value of $w_{av} = 1.0$ inches was used in the following analyses.

The resulting functional fit of the F-5 effective skin thickness distribution is shown in figure 4. The contours represent constant values of thickness for the resulting ten-term polynomial surface fit. An analysis of the F-5 using this functional fit was then made.

For the same geometry and core properties used in the previous fit, a structural weight of 552 lbs was computed for the fit of t_{eff}. This split into a structural skin weight of 331 lbs and core weight of 221 lbs. This is a ratio of actual structural weight to that computed of 1.52 or a ratio of 1.89 when compared with the total wing weight (1,041 lbs).

To obtain a more detailed breakdown of the discrepancies in the weight distribution, the spanwise distributions of cross-sectional material area and moment of inertia were examined. This was accomplished by chordwise integration of material distribution within the structural planform at various stations along the span to obtain the structural material area and the moment of inertia. To compare directly with the corresponding values from the actual F-5, the areas and inertias were resolved into a component perpendicular to the $x/c = 0.35$ reference line.

Figure 5 is a plot of the computed and actual structural material cross-sectional areas versus span. The areas for the actual F-5 were obtained from the tabulated inputs in reference 2. In general, the computed values from the functional fits for both t and t_{eff} are below the actual values. The major source of error contributing to this discrepancy is the poor correlation of the actual structural planform and that in the WADES model. This is most noticeable at the tip as shown in figure 2. An exception is at the root, where the trapezoidal model includes more material than necessary. The fourth curve showing the WADES redesigned material distribution will be discussed later. Figure 6 is a plot of the computed and actual structural moments of inertia versus span. The WADES program most noticeably overpredicts the inertia at the root where there is additional structural planform, and underpredicts it outboard where some planform is excluded.

Calculation of External Loads

Computation of the externally applied forces and pressures was broken into three phases: the reduction of the given aircraft configuration into a set of statically equivalent loads, the estimation of the distribution of aerodynamic forces and pressures, and the summation of these external loads into equivalent shear and moment distributions on the wing in a form appropriate for comparison.

The WADES program accepts as input a breakdown of the aircraft configuration into the body weight and a set of attached discrete masses, and the density of the internal material distribution. From this summation the program generates the balancing set of aerodynamic pressures required for static equilibrium. This static balance of forces and pressures is graphically shown in figure 7. The aerodynamic pressure distribution, p_a, and the mass distributions corresponding to the weight of the skin, p_s, core, p_c, and fuel, p_f, are calculated internally. The presence of a landing gear load, F_{lg}, is input as a negative concentrated mass. (Note that stable dynamic eigensolutions cannot be calculated for this flight condition.) The center of gravity is assumed to be located at the aerodynamic center and the balancing tail load is neglected. Only symmetric loading conditions are considered.

The WADES program uses three methods to estimate the external distribution of aerodynamic forces. These methods are currently available at program load time and may not be intermixed. A first-order approximation of the loads is obtained by the use of a uniformly distributed constant-pressure loading. This loading is independent of Mach number and is the simplest to compute. However, it only begins to approximate the loading on a thin wing in high supersonic flight. The equivalent pressure loading is computed from the ratio of the gross lift required at the maneuver loading condition to the wing area:

$$p_a = \frac{GLR}{S_{wg}} \tag{2}$$

Since the constant-pressure method does not include the flexibility of the wing in the loads calculation, a second method for supersonic loads generation is available using piston theory to derive the pressure distribution. The equation describing this steady-state pressure loading is

$$p_a = 2\gamma M_o p_o \left(1 + \frac{\gamma + 1}{2} M_o \frac{\partial d}{\partial x}\right)\left(\alpha_o - \frac{\partial c}{\partial x} - \frac{\partial w}{\partial x}\right) \tag{3}$$

where α_o is the angle of attack from the zero-lift line, w is the displacement of the wing due to flexibility, and γ, M_o, p_o, d, and c are respectively the free-stream ratio of specific heats, Mach number, static pressure, and the wing depth and camber functions.

Because these two aerodynamic loadings are intended only for supersonic flight, a third method is needed for subsonic flights. The major discrepancy of the first two methods in modeling subsonic flow involves positioning the aerodynamic center at the semi-chord rather than at the quarter chord. For the third method, the methods of reference 11 were used to derive a modified strip-theory load distribution. The details of the corresponding equilibrium conditions associated with this loading are developed in Appendix C.

The static equivalent of a dynamic landing condition was derived to attempt to model the maximum landing loads. This load is approximated from a knowledge of the total lift on the wing and the impact load factor. The force on the landing gear then becomes the weight of the aircraft times the ultimate load factor less the net lift on the wings at the moment of impact with the ground. Therefore, for both main gear the landing force becomes

$$F_{lg} = -SGW\left(1 - \frac{P_{lift}}{N_z}\right) + W_{lg} \tag{4}$$

where P_{lift} is the fraction of SGW due to aerodynamic lift at impact. The equivalent body weight is that computed from the statics for the gross lift required:

$$P_{lift}SGW = N_z\left(W_{body} + W_{fuel} + W_{wing} + \sum_{i=1}^{NCM} W_{cm_i} + F_{lg}\right) \tag{5}$$

where W_{body} is the only unknown.

The summation of each of the above external loadings into equivalent shear and moment distributions on the wing was then undertaken in order to present the results in a form for comparison. This summation included not only the aerodynamic distributions but also the discrete masses and the distributed weight due to skin and core material distributions. The resulting spanwise moments and shears have been integrated and then resolved along the 35-percent chord line. This reference line was chosen to correspond with the data from Northrop on the F-5. This resolution of pressures and forces into shears and moments is typical of beam modeling of wings. Its meaningfulness for wings of very low aspect ratio is of questionable value for other than a standard of comparison.

The integration of the shears and moments is carried out explicitly for the constant-pressure and piston-theory loadings and numerically for the modified strip loadings. The integral equations used to compute the shears and moments for the constant-pressure and piston-theory loadings in the reference axis system along the centerline are

$$\left.\begin{aligned} V_z &= \int_{y_o}^{1}\int_{LE}^{TE} p\,dx\,dy \\ M_x' &= \int_{y_o}^{1}\int_{LE}^{TE} p(y - y_o)\,dx\,dy \\ M_y' &= -\int_{y_o}^{1}\int_{LE}^{TE} p[x - x(e)]\,dx\,dy \end{aligned}\right\} \tag{6}$$

where the pressure, p, is the sum of the distributed pressures due to the aerodynamic, skin, core, fuel, and concentrated masses, and e is the x/c location on the reference chord about which the moments are taken (e = 0.35). Similarly, the equations used to numerically integrate the shear and moment distributions for the modified strip theory are

$$\left.\begin{aligned} V_{z_i} &= V_{z_{i-1}} + \frac{1}{2}\left(w_{a_i} + w_{a_{i-1}}\right)\left(y_i - y_{i-1}\right) \\ M_{x_i}' &= M_{x_{i-1}}' + \frac{1}{2}\left(V_{z_i} + V_{z_{i-1}}\right)\left(y_i - y_{i-1}\right) \\ M_{y_i}' &= M_{y_{i-1}}' - \frac{1}{2}\left(V_{z_i} + V_{z_{i-1}}\right)\left(x_i - x_{i-1}\right) \end{aligned}\right\} \tag{7}$$

The remaining shears and moments due to material distributions, etc., are obtained from explicit integration as in equations (6). Since the lift due to the constant vortex strip is reacted as a discrete load at the quarter chord, the resulting torsional moment, M_{y_i}, is translated to the reference axis as follows:

$$M'_y = M'_{y_i} + V_{z_i}[x(e,y) - x(c/4,y)] \tag{8}$$

The relative senses of the forces and moments for the F-5 wing are shown in figure 8. The resolution of the moments into the axis system referred to the 35-percent chord reference line is then made by

$$\left.\begin{aligned} M_x &= M'_x \cos\theta_s - M'_y \sin\theta_s \\ M_y &= M'_x \sin\theta_s + M'_y \cos\theta_s \end{aligned}\right\} \tag{9}$$

Here the angle θ_s is the angle of sweep of the reference chord line. The calculation and plotting of these distributions has been included as an optional output in the WADES program. Their calculation is made independent of other program functions and does not affect the internal force distribution.

Comparison of Assumed Loads with F-5A/B

In order to establish the sources of the discrepancies between the WADES program results and actual F-5 data, a comparison of the calculated load distributions with the values of the Northrop wing design loads was undertaken. The Northrop design loads used here are summarized in reference 7. The original design loads were computed by superposition of rigid lift and twist distributions computed for the linear aerodynamic range. After completion of the 80-Percent Flight Loads Survey, the measured flight data were reduced to provide unit wing shear, moment and torsion airload distributions that included the rigid and twist lift distributions. These flight data were used for all subsequent loads analysis, and the original wing-tunnel distributions were discarded.

Data from only two of the flight conditions input to the WADES program to analyze the F-5 are compared here (see Table II). They correspond to the maximum symmetric pull-up at sea level (Northrop #123C-5) and the dynamic landind condition (#358B). A comparison of the spanwise loadings computed by the WADES program with constant-pressure loadings and with the modified strip analysis is presented.

Figure 9 shows the comparison of the spanwise shear and moment distributions for the maximum symmetric pull-up case as calculated by the WADES program using constant W/S pressure loading. Two discrepancies are noted here. The first major discrepancy is the change in sign of the torsional moment, M_y. This is the effect of the assumption of constant chordwise pressure distribution. The center of pressure, which is then located at the 50-percent chord line, produces a negative torsional moment. The second discrepancy is the deviation of the shear and bending moment at the root. Where Northrop shows a constant bending moment from the wing-fuselage junction inboard, the WADES program shows an increasing value. This is due to the failure of the model to account for this interface. A secondary effect of this assumption is the inboard shift of the shear and moment curves due to the distribution of the pressure loading over the entire wing area as opposed to just the exposed wing area. The 16-percent increase in pressure corresponding to the difference in theoretical and exposed wing area would bring the shear and bending moment much closer together. The wrong sign on the torsional moment is unaffected by this shift.

Figure 10 is a comparison of the same symmetric pull-up flight condition except that the loads have been computed with the modified strip loadings as described in Appendix B. The torsional moment, M_y, now has the proper sense due to the location of the local aerodynamic center at the quarter chord. The slight underestimation of the torsional moments is the result of improper placement of the chordwise centroids of the attached concentrated masses and the distribution of the spanwsie loading over the theoretical planform instead of the exposed wing area. A proper choice of chordwise centroids would increase the root torsional moment by 100,000 in-lbs. The recalculation of the spanwise loading, as noted previously, would create an outward shift of each of the bending and torsional moment curves and of the shear loading. The resulting shear load at the root is currently within 5 percent of the actual F-5 data. Only its relative location is in error.

Figure 11 shows the comparison of the ultimate spanwise wing loads for the dynamic landing flight condition. The results from the calculation of loads by the WADES program using modified strip loadings are compared with the Northrop loads calculated at the reference time, $\tau = 162$. A

landing gear force as computed in equation (4) was used to estimate the equivalent static loads. The moments and shears are generally within 10 percent of the F-5 data inboard of the landing gear. However, an earlier Northrop reference time, $\tau = 118$, produced the critical landing loads. When compared with this case, the current WADES landing loads were about 30 percent below the actual dynamic loads.

Deflections

Since the flexibility of the wing almost always affects the distribution of load over the surface, the spanwise deformation of the actual F-5 was compared with that calculated by the WADES program. Figures 12 and 13 show comparative plots of the spanwise vertical deflection of the F-5 wing for a test limit load for Northrop flight conditions #104 and #123C-5, respectively. The loads have been reduced to limit load factor, and the deflections have been referenced to the aft wing trunion. The wing flexibility was calculated using the material distribution obtained from the surface fit of the F-5 skin-thickness distribution shown in figure 3.

The deflections at the 35- and 44-percent chord lines are compared. The Northrop spanwise deformations at the 44-percent chord line were obtained from static ground tests. The Northrop deflections at the 35-percent chord line are their calculated predictions. In both cases the deflections given for the WADES program were estimated from theory using a constant-pressure type of loading. It is noted that the Northrop predictions always overestimated the actual deformation. The deformations calculated by the WADES program using the surface fit of t are within 2-1/2 inches of the measured Northrop values. The use of the effective skin-thickness distribution (not shown in fig.) generally results in a 10-15-percent reduction in calculated deflections.

Summary of F-5 Analysis of Surface Fit Material Distribution

Thus far, in order to analyze the F-5A/B, equivalent core properties have been estimated, surface fits of the upper skin-thickness and effective skin-thickness distributions have been made, and three flight conditions have been chosen to model the critical loading conditions. With these

models of the actual F-5, the ability of the WADES program to predict the structural response and compute the weight of a given configuration was evaluated.

The comparison of the externally applied loads showed that better results may be obtained if the modeling of the wing-fuselage junction is changed. A switch to a subsonic wing loading from a constant-pressure loading produced an improvement in the torsional loading. The deformations computed from the surface of the skin thickness showed good correlation with Northrop data. The surface fit of the upper skin panels generally was within 0.03 inch of the actual skin thickness at any point on the wing. The integrated cross-sectional area distribution perpendicular to the 35-percent chord line for the effective skin-thickness function showed the best results inboard of the landing gear. However, poor correlation was obtained outboard of that spanwise station due to improper modeling of the structural planform. The total weight computed from a surface fit of the actual F-5 skin was significantly in error because of the presence of "non-optimum" weight and because of the reduced structural planform.

Redesign of F-5 Thickness Distribution

In the first phase of the F-5A/B study, each facet of the structural and aerodynamic analyses used by the WADES program to model the structure and loads was compared. In order to evaluate the design capability of the program, a redesign of the original thickness function was undertaken. This entailed designing the wing for strength using the thickness function and loads of the previous analysis as the starting point. The previous geometric representation, flight conditions, and equivalent core properties were used. During this design the coefficients of the function describing the thickness distribution were optimized to obtain the minimum-weight structure to satisfy the strength and minimum-gage constraints in the wing.

Though the F-5 wing presumably satisfies all the design requirements, because of modeling differences such as using a distributed core and thickness function and a different structural planform, the analysis model with the initial surface fit did not satisfy the set of WADES constraints. This is apparent in figures 9 and 10, where the bending moment at the root significantly exceeds that of the actual F-5 due to improper modeling of the wing-fuselage junction. The resulting redesigned thickness distribution

overestimates the material requirements at the root. The plot of the WADES redesigned cross-sectional area of structural material versus span in figure 5 exceeds the actual area at the root but still underestimates it at the tip.

The resulting redesigned F-5 wing weighed 670 lbs when designed for the constant-pressure loadings. Of that weight, 449 lbs was in the upper and lower skins. The core weight was the same as before. That total computed weight yields a non-optimum weight factor of 1.25, based on the ratio of actual structural weight to computed structural weight. A similar design using the loads computed from subsonic strip theory (in fig. 10) weighed 602 lbs, reflecting the change in spanwise load distribution. Though these weights appear to be closer to the actual F-5 weights, their spanwise distribution is actually worse than the surface-fit values. The major part of this discrepancy comes from the difference in bending moments at the root as evidenced in figures 9 and 10. The displacements of the redesigned thickness distribution are about 8 percent less than the effective skin-thickness displacements.

GENERAL WEIGHT CORRELATION

For the WADES program to provide accurate estimates of wing weights over a broad class of aircraft, a general non-optimum weight factor based on the ratio of actual wing weights to computed values must be statistically established. Previously, such a ratio was computed for a specific aircraft, the F-5A/B. In this section such a factor will be computed for a class of aircraft and a regression analysis performed to attempt to establish its value.

The class of aircraft used in this wing-weight correlation consists of U. S. Air Force and U. S. Navy fighters. This grouping was chosen because of the adaptability of medium-to-low-aspect-ratio aircraft to the plate theory structural model used in the analysis. Because of the high performance requirements of these aircraft, their designs display a high dependence on the strength requirements and loads imposed on the wing structure. Because many were boarderline on incurring weight penalties for required aeroelastic stiffening, the computed "non-optimum" factor may also reflect such additional material.

The approach taken to develop this weight correlation factor was to first perform a design of the given configuration based on the best estimate of the structural model, and then secondly to perform a linear regression analysis with the computed optimum weight to find the best factor or factors to correlate with the existing aircraft wing weights. Several combinations of wing component weights were tried to assess the dependency of the total wing weight on them.

Preliminary examination of the estimated component and total wing weights indicated that the best correlations were obtained by comparing only the weights of the structural planform. Because the function describing the thickness distribution is continuous over the entire planform, the computed weights are misleading in that they do not account for the discontinuity in material between primary and secondary structure such as flaps and ailerons. As a result, the integrated material volume is grossly overestimated in these regions. Subsequent correlations were made using only the weights of the material contained in the structural planform.

Aircraft Used in Weight Regression

The aircraft used in the wing-weight regression analysis to determine the non-optimum weight factors were U. S. Air Force and U. S. Navy fighters. Tables IV and V contain a summary of the wing parameters for the vehicles considered in this analysis. Table IV contains a list of the thickness-to-chord ratio at the wing root and tip, the root chord, semispan, leading-edge and trailing-edge angles, an approximate chord fraction of the leading-edge and trailing-edge structure, and an estimate of the fraction of the structural planform available to contain fuel for each of the aircraft studied. Because the structural planform does not always align itself with the constant chord lines assumed by the program, chord fraction of leading-edge and trailing-edge structure was selected to approximate an equivalent structural planform area. If the volume fraction of the available fuel was not known, a default value of 0.5 was used. If the weight of the fuel in the wings is known, this value may be later computed.

Table V is a summary of the critical loading conditions input to the WADES program to design the various aircraft wings during the correlation. The component weights and load factors were obtained from the vehicle group weight statements in reference 10. The F-5 loading conditions are a composite of the group weight statement data and information in

reference 7. Where the design altitude and Mach number were not available, default values of 25,000 feet and 0.9 were used. The use of negative concentrated loads indicates application of the landing wheel load as computed in equation (4).

Regression Analysis

Because of a lack of direct correspondence between computed and actual wing weights during preliminary examination of design weights, four separate regression analyses were made to determine the best non-optimum weight factors based on various components of the structural weight. In addition, the weights were computed for two types of applied loadings: a constant-pressure load, and the subsonic modified strip loading described in Appendix C. The correlation factors generated here were obtained on the basis of the total wing weight, including the additional control-surface weight. Another valid non-optimum weight constant might be computed based only on the ratio of actual to computed structural weight. This was not undertaken here, since the estimation of the total wing weight was of primary interest.

The variables used in this regression analysis were the weight of the skin structure, WTSS, the weight of the core structure, WTCS, and the planform area of the wing, S_{wg}. The weight of the core structure was computed from the product of the average core density and the volume of the core. S_{wg} was included to check for the dominance of control surfaces and substructures. The four equations used to fit the wing weight data were:

$$W_1 = B(1)WTSS + B(2)WTCS \tag{10}$$

$$W_2 = B2\ WTSS + WTCS \tag{11}$$

$$W_3 = B3\ WTSS \tag{12}$$

$$W_4 = BS(1)WTSS + BS(2)\,S_{wg}/288 \tag{13}$$

All weights are in pounds and S_{wg} is in square inches. In all cases the weight of the skin structure was used as one of the independent variables. Percent errors based on the actual wing weight and the weight computed in equations (10) to (13) were computed as follows:

$$P_i = 100(W_i/W_{actual} - 1), \quad i = 1,2,3,4 \tag{14}$$

The regression analysis for each of the above equations was performed using a least-squares functional fit.

The four equations used in the regression analysis were selected in order to evaluate the sensitivity of the computed weight to the various components. The weight of the skin structure was used in each of the equations, since it contains the only component designed by the WADES program and carries the primary load in the wing. The first equation was selected to establish the relative significance of the weight of the core (substructure). Because the core volume is directly proportional to the volume contained within the structural planform, the free coefficient on WTCS then becomes an estimate of average density of the substructure. The regression analysis using the second equation was made on the basis that the value of the density of the core was computed from the estimation of the equivalent distributed properties of the F-5 as derived in Appendix A. The third equation was used to evaluate whether the wing weight was directly proportional only to the weight of the skin. Since most minimum-gage effects in non-primary structure are proportional to the planform area of the wing, the regression analysis using the fourth equation was performed.

The parameters used to describe the geometry of the wings were not included in the regression analysis. It was assumed that their effect was included implicitly in the design of the wing itself.

Regression Results for Isotropic Wing Design

The regression analysis using the four weight equations was carried out for the two types of static loading discussed previously. In each case the minimization of the weight of the skin structure was taken as the objective of the design. The results of the regression analysis for the weights computed using constant-pressure loads are shown in Table VI. The results generally show a dominance of the core weights and the term proportional to the planform area. The third equation demonstrated the weakest correlation. Table VII contains the results of the regression analysis for the wing weights computed using the modified strip loads. The results show a strong dominance of the weight of the skin structure in the first three equations. The wing area still exhibits a strong correlation in the fourth expression.

Upon consideration of the weights computed from the surface fit of the thickness distribution of the F-5 wing and the deficiencies in modeling the structural planform, it is recommended that the first regression equation be used with the coefficients B(1)=2.6 and B(2)=0.75. These values correspond to coefficients computed for the weights estimated using the modified strip loads. They also compare very closely to the values that would be computed from the surface fit of the effective skin-thickness distribution. The current program deficiencies in modeling the structural planform suggest that the estimates of the weight component proportional to core volume may be erratic; and therefore, the lower correlation coefficient for B2 should be used.

Regression Results for Composite Material Wing Design

An attempt was made to obtain detailed information on specific wing components built from composite material. The information received did not contain sufficient information to check weight estimation directly. In lieu of specific data, an alternate procedure based on obtaining a fixed percentage reduction in weight over existing aircraft was undertaken. Weight correlation factors based on the specified percent reduction were then obtained from the previously described regression analysis.

To implement this procedure the group of U. S. Air Force and Navy fighter aircraft were redesigned using composite materials in the wing cover panels. The structural skin and core weights were recomputed. No modification of the estimated core density was made. The current wing weight was multiplied by a constant fraction, and the regression analyses using equations (10) to (13) were carried out.

The correlation coefficients were determined for three wing weight percentages: 100, 70, and 60 percent of the original wing weight. The wings were designed using constant-pressure loadings. The results of the regression analysis for an estimated 7--percent wing weight are shown in Table VIII. The regression results for 100 and 60 percent were generally within a constant of these values. The coefficients shown here do show a strong correlation with the computed skin weights. If the correlation coefficients developed for the design of wings with isotropic wing skins are used, the weights are generally between 60 and 70 percent of the actual vehicle weights. In view of the current state of technology, it is

recommended that the slightly higher coefficients derived here should be used.

INTEGRATION OF WADES PROGRAM INTO ACSYNT

The primary programming task accomplished in this study was the adaptation and incorporation of the prior work of Dr. Mullen, involving structural optimization techniques for automatic resizing of low-aspect-ratio wings, into Ames Research Center's ACSYNT program for vehicle synthesis. This task was completed and a test case involving the convergence of an aircraft to satisfy the mission requirements of the F-5A with ACSYNT was run. Some of the modifications required to interface the WADES program with ACSYNT are summarized here.

Operation in ACSYNT Overlay Structure

The primary programming task to integrate the WADES program into ACSYNT was its conversion to an OVERLAY structure. This was necessary in order for the WADES program to reside simultaneously in core with ACSYNT within the CDC 7600 core limitations. The WADES program was sufficiently modularized so that no major adjustment in the program flow was required. The problem then became one of maintaining as many of the program features as possible without sacrificing program generality.

In arriving at the current overlay structure two subdivisions of the program were considered. In each case the WADES program was required to exist as OVERLAY 5,0 within the ACSYNT overlay structure and maintain its own sub-overlays. In the first attempt, the program was set up with an executive main overlay to branch to the appropriate function depending on the request from ACSYNT, and three sub-overlays which provided three functions: input, analysis or design, and detailed output. This information was provided according to the request for information from the ACSYNT parameter ICALC. This breakdown provided the most direct program flow with the least exchange of overlays in and out of the machine during execution. This version was made operational initially for only the strength design of isotropic wings. Because of the heavy demand for core space at that time for the analysis and design overlay, it was determined that it would not be possible to have the composite strength design code or its stiffness and flutter design code reside in core without significant reduction in

the core storage required by ACSYNT overhead. The initial load with this version required about 168K octal core locations to load. This limit proved to be unacceptable in view of machine access requirements imposed by the computer operating system.

The second and current overlay structure again used OVERLAY 5,0 mainly as an executive function with the sub-overlays providing the three functions: input/output, wing analysis, and design for strength only. In this manner the analysis code and the design code, which used CONMIN (program for CONstrained function MINimization), could be separated. The main routine that organizes the sequence of analyses and designs also resides in the same overlay as the WADES executive routine. The loss of generality resulting from this choice of overlays is the inability to perform a combined strength and flutter design simultaneously with the ACSYNT program. A flutter analysis is still possible in this mode; however, the requirement that the analysis and design code both reside in core precluded this method of operation. The possibility of design for flutter is still available in a stand-alone mode. The decision to implement this overlay breakdown was made on the basis that the only mode of operation in which the WADES program would be used with ACSYNT in the near future would be in the design for strength only. A return to the first overlay structure outlined above, to permit combined strength and flutter design, would be possible given a 25K octal reduction in OVERLAY 0,0 core requirements.

The flow of calculations through the wing design executive routine, OVERLAY 5,0, is controlled by two parameters, ICALC and ICONTR. The first is the ACSYNT control parameter, and the second is a user-specified control input. ICONTR determines the branching to either an analysis-only mode or to the wing design for either an isotropic or a multi-layered composite wing. The flow chart in figure 14 outlines the basic subroutine and OVERLAY flow of the WADES executive routine STRUCW (OVERLAY 5,0) with the branching determined by the two control parameters, ICALC and ICONTR. Similarly, in figures 15, 16, and 17 are the basic flow of OVERLAYS 5,1, 5,2, and 5,3, respectively, and their corresponding subroutine usage. Included in figure 15 is the branching according to the value of ICALC, and similarly in figure 17 is the branching as determined by ICONTR. In figure 16, the basic subroutine usage in the analysis of the wing stiffness, loads, stresses, etc., is shown. The call to the various analysis routines are determined by the control parameter IANAL(I,IFLT) as required by the IFLT'th flight condition.

The design of both the isotropic and multilayered composite wings employs a sequence of minimization problems to arrive at the design weight of the wing. The relative error in the skin weight below which this convergence is forced is at the discretion of the user. The basic subroutine and overlay flow of the WADES program as it exits with ACSYNT is shown in figure 18 for the design of isotropic wings and in figure 19 for the design of multi-layered composite wings. The number of iterations necessary to obtain the wing weight may be specified either as the number of iterations required to converge the weight to within the desired error or as a maximum number of iterations (NRAT).

Geometry Interface with ACSYNT

In order to interface the geometric descriptors of the WADES program with those of ACSYNT, the equations describing the relationships among the appropriate variables were derived. The WADES program is currently limited to trapezoidal planforms and uses the root chord (R), semispan (SPAN), and leading-edge (THET1) and trailing-edge (THET2) angles to describe the geometry. ACSYNT, on the other hand, uses a nondimensionalized description with an arbitrary reference line, which is usually the quarter chord. The remaining variables, t/c at the root and at the tip, are identical.

The basic external planform description of the wing used in the WADES program is shown in figure 20. The equivalent geometric values were derived in terms of the appropriate ACSYNT descriptors. The WADES geometric values are summarized in terms of their ACSYNT equivalents in figure 20.

Loads Interface

In order to interface the loading conditions used by the WADES program with the changing weight and flight information generated by ACSYNT, some method had to be devised which could update the loads during execution. Further, this method had to reflect the nature of the critical structural design conditions and not necessarily just the mission flight profile. Because of program limitations, it also had to be limited to a maximum of three such critical conditions. Three approaches are outlined here that may be taken to generate the necessary structural design conditions to be met.

The first approach is to read in the critical structural flight conditions directly. This method was used in generating the correlation information presented later in this report. In this case the atmospheric and weight information is included in the input data. In the particular instance of the vehicle correlations, these design conditions were obtained directly from the Group Weight Statement furnished by the airframe manufacturers. These included the structural gross weight, ultimate load factor, and fuel contained in the wings at the design conditions. The conditions generally contained the design flight and landing weight, maximum gross weight with zero fuel in the wing, a catapulting condition, where appropriate, and the minimum flying weight. Usually, the particular arrangement of external stores and maneuver conditions for the configuration were not included. In most cases, an estimate determined by working back from the gross weight and fuel condition to a configuration had to be used.

This approach of reading in the design flight conditions is valid only if a known configuration is being analyzed. Even then, it remains true only if the remaining body and fuel conditions are constant throughout the design. Since the convergence portion of the ACSYNT program operates in a mode where most of the individual components are continually being updated, a direct input of the structural design flight conditions would lead to erroneous results.

The second approach to providing the critical structural flight conditions is to incorporate a special-purpose subroutine to compute the appropriate loading conditions. In this manner the structural loads can be made to reflect the particular configuration and mission requirements. Such loading conditions can then be made to include such items as partial fuel conditions in the wing and the positioning of empty fuel tanks on the wing during landing. This method is used later to update the loads for the F-5A/B case study, checking the convergence of the WADES program with ACSYNT.

In the F-5A/B study a specific routine, FLTLDS, was written to specify the approximate flight conditions outlined in the Group Weight Statement (ref. 10). Instead of specifying the loading condition directly from the design structural flight conditions, the critical loads were written in terms of the general gross takeoff weight and various fuel weights. Only the relative proportions of fuel at maneuver and landing

were maintained similar to those in the weight statement. Thus, the critical stress gross weights and loads were updated during the ACSYNT convergence cycle. The particular relationships used to compute the appropriate WADES loads inputs are summarized in Table IX. Though the maximum symmetric pull-up and the landing load condition are two of the major design considerations, routine FLTLDS is F-5A/B aircraft-dependent because of the inclusion of such factors as the values of the fuel fractions considered and the positioning of fuel tanks on the wing tips.

The third approach to the specification of the structural flight conditions would be the derivation of a general routine to find the critical conditions. In general this would entail a survey of the critical gust, maneuver, landing, and eventually flutter conditions. It would also require a check of the possible external store configurations. An interim approach would be to utilize the outline of a routine such as the F-5A/B-derived FLTLDS with the ability to input all fractional relationships. If wing-mounted engines are to be considered, their positioning on the wing should be included. At the moment no such geometry descriptor exists within ACSYNT to locate their chordwise and spanwise locations on the wing. Such interfaces would have to be either generated or input to obtain their impact on wing design.

Optional Material Properties

The WADES program uses two modes to input material properties for use in analysis or design. In the first mode, the material properties are read as part of the normal input data stream. In this case the elastic constants and density are input through the namelist MATERL and the failure stresses are input through the namelist CNSTR. In the second mode, the WADES program generates the required properties and failure criteria internally. In this case the appropriate material constants are defined for three materials: (1) aluminum, (2) titanium, and (3) graphite/epoxy. The last defines only the appropriate lamina properties and is used in multilayered composite analysis and design.

The second mode of material property input is available optionally by the input of a non-zero value of the program parameter, ITYPES, in namelist OPTNS. In this mode of operation the appropriate material properties are defined prior to their input in the normal data stream. Thus, any of the isotropic material constants defined in this manner may

be overwritten by its appropriate redefinition in the namelists MATERL or CNSTR. The definition of these material properties is performed in subroutine MATRLS. A summary of the values available by option is shown in Table X.

Special Version of CONMIN

The WADES program uses the mathematical-programming technique called the Method of Feasible Directions (MFD) to perform the optimal resizing of the wing structure. This technique was originally outlined by Zoutendijk (ref 12) and demonstrated for use in structural optimization in reference 13. This MFD algorithm has been programmed in a general form in the Fortran program for CONstrained function MINimization (CONMIN), reference 14.

Since this program also acts as the resizing algorithm for aircraft optimal design in the ACSYNT control program, it was necessary to include a second version. This version provides a sub-level optimization function and has to reside simultaneously in core. To avoid a Fortran naming conflict the name was changed to CONMN with subroutines CNMNJ1,....,CNMNJ9. This version was redimensioned to handle thirty design variables and up to forty active constraints.

Convergence of F-5A/B with ACSYNT

To check the operation of the WADES program with ACSYNT the two programs were connected and several test cases were run to test their convergence properties in an iterative mode. The connection to the October 1974 version of ACSYNT using a temporary buffer routine and the F-5A/B version of FLTLDS was made. In figure 21 are the results of a WADES/ACSYNT convergence cycle. In the figure the convergence characteristics of three typical variables, WWING, WFUEL, and WGTO, are plotted versus the iteration number. The wing weight, WWING, in this figure was computed by the WADES module. The remaining two variables, the fuel weight and the gross takeoff weight, were computed in the current trajectory and weights estimation parts of ADSYNT. This wing weight was computed using the preliminary correlation relationship

$$WWING = 2.4\ WTSS + WTCS \tag{15}$$

where WTSS is the weight of the skin structure and WTCS is the weight of the internal substructure as computed by WADES. These correlation

coefficients do represent a good value for the F-5A/B using constant W/S wing loadings because of the additional detail comparison, but they are not the set of correlation coefficients as determined earlier in this final report for a broader class of aircraft.

A detailed examination of the convergence cycles shows that the trends exhibited by the wing weight do follow closely the weight of fuel and gross takeoff weight. The first five iterations in figure 21 are spent bounding the limits of WTSUM=WGTO. In the next three iterations the design has essentially converged. A total of twelve vehicle analyses were used to converge the aircraft to the necessary tolerance specified by ACSYNT. An average of four analysis and design cycles were used by WADES to converge a wing design during each of the ACSYNT iterations. This average convergence rate should drop significantly when redesign, which uses the previous design for the starting point, is implemented.

The horizontal line on each curve in figure 21 represents the initial estimate of each particular parameter, which is equal to the actual value obtained from the F-5A/B Weight Statement. In each case the final weight does converge to a value lower than the actual. It is noted that the wing weight was slightly overestimated on the first iteration when this set of correlation coefficients was used.

WADES PROGRAM DOCUMENTATION

The purpose of this section is to describe the basic usage of the wing aeroelastic design program, WADES, with the ACSYNT program for vehicle synthesis and in a stand-alone mode. Included are the basic description of parameters, a sample input, a sample of the printout from routine WOUT, a short description of the purpose of each routine, and a description of the use of alternate analysis and design routines. The program computes the stiffness and mass properties for a wing using an "equivalent-plate" Rayleigh-Ritz model. The structural response is calculated for the application of both steady and unsteady aerodynamic loading, and the material distribution of the wing skin can be resized to satisfy both strength and aeroelastic requirements. The theoretical background for the development of the analytical model was originally determined under sponsorship of the National Research Council, and the report summarizing this effort is in preparation.

Description of Parameters

The geometric description, material properties definitions, flight conditions, and design constraints are detailed in this section. The descriptions in this section pertain to those definitions affecting the determination of input parameters. All information required to derive the inputs for both the stand-alone program version and the integrated version used as a module for the ADSYNT program is explained. Only minor modifications in several routines have been made to adapt the WADES program to operate in the ADSYNT overlay structure. The current version of the stand-alone program version will execute with all options in 142K octal words of core.

Since both programs use essentially the same routines, only minor omissions in the input data must be made to execute the WADES program with ADSYNT. Both programs use the same input subroutine. Only the variables describing the geometric shape of the wing and those weights which vary with changing gross weight need to be omitted. In subsequent analyses those values will be overwritten by values supplied by the ADSYNT main program. A basic user's guide to the WADES program inputs is given in figure 22.

Wing geometry.- The geometric planform analyzed in the WADES program is trapezoidal and consists of superimposed aerodynamic and structural regions. The structural planform is always contained within the aerodynamic planform. All material contributing to bending strength is contained within the structural planform. Nonstructural material within the aerodynamic planform is considered to contribute only to wing weight and mass properties. Core properties are considered to be distributed over both structural and aerodynamic planforms. Fuel is considered to be distributed only within the structural planform.

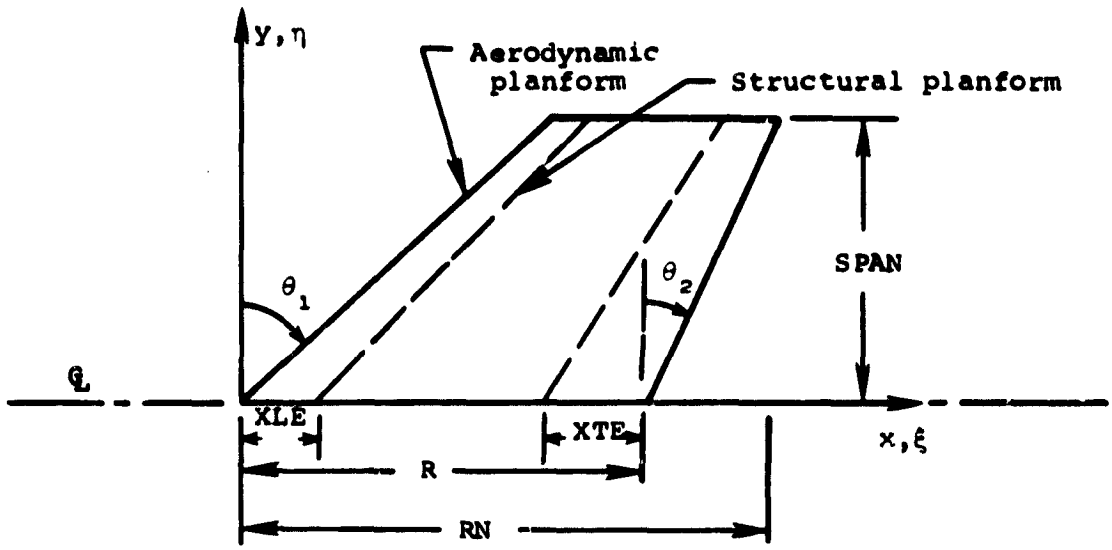

where

R = root chord (length)

SPAN = semispan (length)

THET1 = leading-edge sweep (degrees)

THET2 = trailing-edge sweep (degrees)

XLE = location of leading edge of structural planform (fraction of chord)

XTE = location of trailing edge of structural planform (fraction of chord)

Thickness and depth functions.- Thickness, and depth and camber distributions are represented as continuous functions. The particular depth or camber function used in the program is a polynomial with zero depth enforced at the leading and trailing edges. This results in a symmetric airfoil section with sharp leading and trailing edges. The resultant function is formed as the product of the planform polynomial, $WP(\xi,\eta)$, which enforces zero depth at the edges, and a user-supplied polynomial, $FD(\xi,\eta)$. An approximation to a biconvex wing section is available as a default within the program. The shape of the cambered surface is also specified in the same form as the depth function through the variable, $FC(\xi,\eta)$. The thickness is similarly the product of the planform polynomial and a polynomial distribution function plus a minimum thickness constant. For multilayered composite design each lamina may be described by a separate function. These polynomial functions may then be written:

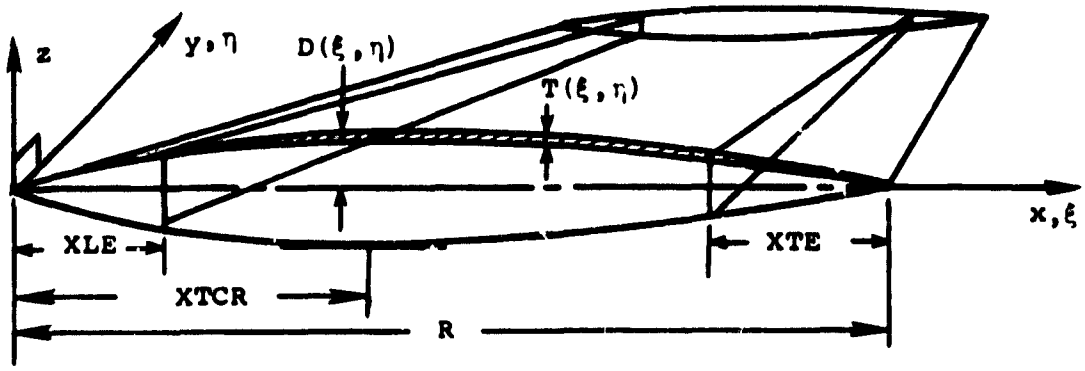

Planform polynomial - WP:

$$WP(\xi,\eta) = (\xi - \eta * TAN(THET1) * SPAN/RN) * (-\xi + \eta * TAN(THET2) * SPAN/RN + R/RN)$$

Depth and thickness functions - D,T:

$$D(\xi,\eta) = WP(\xi,\eta) * (FD_1 + FD_{i+1}\xi + \ldots + FD_{NFD}\xi^{j-1} + FD_2\eta + FD_{i+2}\xi\eta \vdots + FD_i\eta^{i-1})$$

$i=1,IFD;\ j=1,JFD$

$$T(\xi,\eta) = WP(\xi,\eta) * (FT_1 + FT_{i+1}\xi + \ldots + FT_{NFT}\xi^{j-1} + FT_2\eta + FT_{i+2}\xi\eta \vdots + FT_i\eta^{i-1}) + T_{min}$$

$i=1,IFT;\ j=1,JFT$

Alternate depth representation (approximate):

$(t/c)_{root}$	thickness to chord ratio at root
$(t/c)_{tip}$	thickness to chord ratio at tip
XTCR	location of maximum t/c along root (fraction of chord)
XTCT	location of maximum t/c along tip (fraction of chord)

This approximates a linear t/c and linear XTC distribution to the surface of the wing as a depth function. The number of degrees of freedom in this approximation is determined by IFD. If XTCR=XTCT=0, a biconvex section is fit with JFD=1 and NFD=IFD. If XTCR>0, a linear fit to the location of maximum t/c is included with JFD=2 and NFD=2*IFD-1<11.

Material property definition.- All material properties are considered to be distributed and continuous throughout the wing section. All properties are given with respect to the global reference system. Isotropic material properties are considered constant throughout the planform. Composite properties similarly maintain the properties of the discrete ply over the entire planform. Core properties are also considered as distributed and continuous throughout the section. The core may be modeled as either conventional or sandwich construction and appropriate properties averaged through the section.

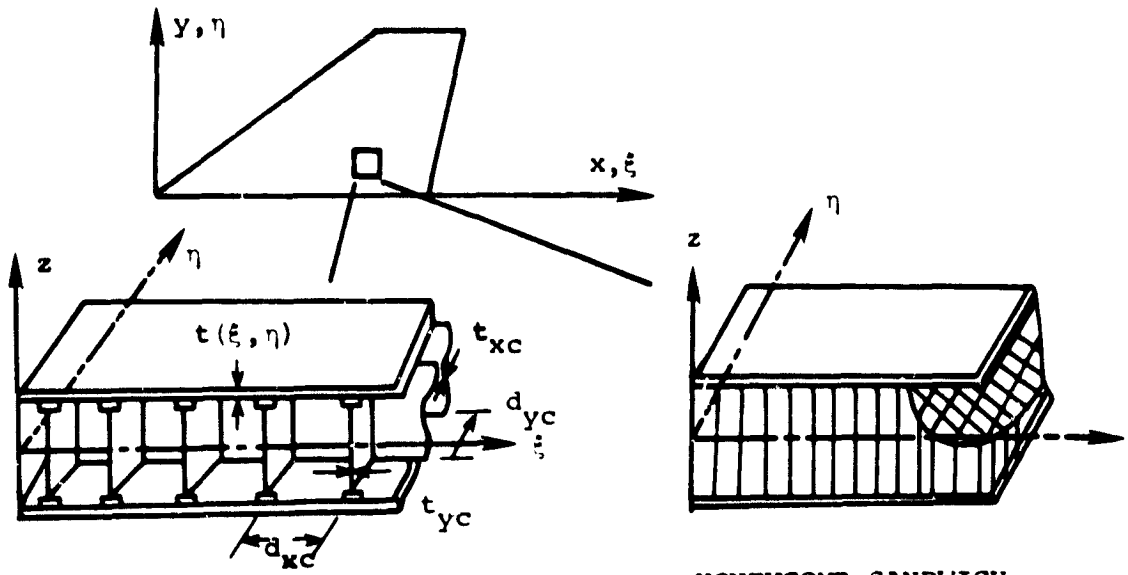

CONVENTIONAL HONEYCOMB SANDWICH

Material properties

Skin: EXS,EYS,GXYS,GXZS,GYZS,RHOS

Core:	Conventional	Sandwich
EXC	$= \frac{(EI_y)_{ACT}}{\frac{2}{3} d^2 d_{xc}} \approx \frac{Et_{yc}}{d_{xc}}$	EXC
EYC	$= \frac{(EI_x)_{ACT}}{\frac{2}{3} d^2 d_{yc}} \approx \frac{Et_{xc}}{d_{yc}}$	EYC
GXYC	$= 0$	GXYC
GXZC	$= \frac{(GA_y)_{ACT}}{2d\ d_{xc}} \approx \frac{Gt_{yc}}{d_{xc}}$	GXZC
GYZC	$= \frac{(GA_x)_{ACT}}{2d\ d_{yc}} \approx \frac{Gt_{xc}}{d_{yc}}$	GYZC
RHOC	$= \rho_{SPARS}\left(\frac{t_{yc}}{d_{xc}}\right) + \rho_{RIBS}\left(\frac{t_{xc}}{d_{yc}}\right)$	RHOC

Loads.- The effects of inertial, discrete, and distributed pressure loadings are considered. The discrete loads are incorporated as concentrated masses. Their effect is included as a discrete inertial force loading in the static analysis. They are included as discrete inertial masses in the generation of mass properties. Discrete loads are located at fractions of chord and span. Allowance is also made for the inclusion of certain weights (such as external fuel or armament) as a function of flight condition. Similarly, the effects of the inertial loading of the skin, core, and fuel weights are included in both the static analyses and mass properties.

Inertial loading of discrete loads:

$$PCM(\xi,\eta) = -ANZ \sum_{I=1,NCM} WCM(XCM,YCM)\,\delta(\xi(XCM),YCM)$$

Similarly as a function of flight condition for

J=1,NOTC

I=1,NCMFLT

Inertial loading of skin, core, and fuel:

$$p_s(\xi,\eta) = -ANZ\ \rho_s T(\xi,\eta)$$

over aerodynamic planform

$$p_c(\xi,\eta) = -2\ ANZ\ \rho_c D(\xi,\eta)$$

over aerodynamic planform

$$p_f(\xi,\eta) = -2\ ANZ\ \rho_f PVA\ D(\xi,\eta)$$

over structural planform

where

ANZ = ultimate load factor

$\rho_{s,c,f}$ = densities of skin, core, and fuel (#/L**3)

PVA = fraction of volume available containing fuel<PVOL

WCM = discrete inertial load

$T(\xi,\eta)$ = thickness distribution of skin cover plates

$D(\xi,\eta)$ = depth distribution of core

Distributed pressure loads are incorporated in two forms: second-order piston theory and constant-pressure loading. The piston theory pressure distribution is computed iteratively as a function of the angle of attack required for gross lift and the displacement shape. A constant-pressure distribution is available as an alternate loads subroutine. This routine computes a constant-pressure loading from W/S.

$$p_a(\xi,\eta) = GLR/SWG = W/S$$

Second-order piston theory pressure distribution:

$$p_a(\xi,\eta) = \left[2\gamma M_o P_o\left(1 + \frac{\gamma+1}{2} M_o \frac{\partial d(\xi,\eta)}{\partial x}\right)\right]\left[\alpha_o - \frac{\partial w}{\partial x} - \frac{\partial c}{\partial x}\right]$$
$$- \frac{2\gamma P_o}{a_\infty}\left[1 + \frac{\gamma+1}{2} M_o \frac{\partial d(\xi,\eta)}{\partial x}\right]\frac{\partial w}{\partial t}$$

The term including the rate of change of displacement with time provides the basis for the aerodynamic forcing or damping in the calculation of the flutter Mach number and frequency conditions.

A modified strip theory for subsonic, static loads is also available. These loadings per unit span are integrated and applied as discrete forces along the quarter chord. This form of the aerodynamic loads is based on the method of Grey and Schenk (NACA TN-3030, ref. 11) and is restricted to small angles of attack at subsonic speeds.

The general method for computing the static balance of external forces is by the satisfaction of the requirement that the gross lift available, GLA, is equal to the gross lift required, GLR. Two methods of computing the gross lift required are included which are independent of the type of pressure loading used. The choice of method of calculation is specified by the parameter, LANAL(2,IFLT), for the given flight condition. For LANAL(2,IFLT)=1, GLR is equal to the summation of body, skin, fuel and concentrated mass weights times the maneuver load factor.

```
GLR = ANZ(WBODY+WTWING+WFR+NWINGS(SUM WCM(I)
        + SUM AMFLT(I))
```

For LANAL(2,IFLT)=2, GLR is computed from the input of the specified wing loading required.

```
GLR = (W/S)*SWG
```

The WADES program is organized to consider NOFC flight environments and loading conditions during both analysis and design. The speed of sound, Mach number, static pressure, and ratio of specific heats are the environmental factors which vary with flight condition. The discrete loads, load factor, body weight including the payload and fuel not in the wings, and fuel weight in the wing are the loading

conditions which vary with flight conditions. The enclosed program version is dimensioned to handle three such flight conditions of various combinations of the above environmental and loading conditions.

Behavioral constraints.- The behavioral constraints considered are: stress, displacement, fundamental frequency, and flutter Mach number, frequency, and dynamic pressure. The behavioral constraints are checked at each required flight condition. For an isotropic material the strength constraints are the maximum allowable von Mises' stress resultant, SMAXT. The stress is evaluated at a grid of NXSIG by NYSIG points over the wing planform. This grid is restricted to points within the structural planform of the wing. The displacements of both the leading and trailing edges at the wing tip are constrained to be less than the allowable, WMAX. The fundamental frequency is constrained to be above its minimum, EIGMIN. The flutter frequency, Mach number, and dynamic pressure must be greater than their corresponding minima, FFMIN, FMMIN, and QFMIN.

For multilayered composite materials, the strength constraints are in the form of a modified distortional energy criterion for the failure of the individual plys according to their direction of orientation. This constraint is evaluated at each of the points in the structural grid. This constraint takes the form

$$1 \geq \sqrt{\left(\frac{\sigma_x}{SL11}\right)^2 + \left(\frac{\sigma_y}{SL22}\right)^2 - KL12\left(\frac{\sigma_x}{SL11}\right)\left(\frac{\sigma_y}{SL22}\right) + \left(\frac{\tau_{xy}}{SL12}\right)^2 + \left(\frac{\tau_{xz}}{SL23}\right)^2 + \left(\frac{\tau_{yz}}{SL23}\right)^2}$$

where the SLIJ are the uni-directional failure stresses for tension or compression in the appropriate direction (ref. 15).

Geometric constraints.- The geometric constraints considered are for minimum gage material thickness of the wing cover sheets. The thickness function is written as a function plus a constant. The constant has been prescribed as the minimum gage and the remaining functional is constrained to be positive at all points. The functional is evaluated at a grid of NXGC chordwise by NYGC spanwise points over the planform of the wing. The number of points in each direction must be greater than the order of the polynomial in the appropriate direction to insure a non-trivial solution for intermediate points.

For multilayered composite materials an additional constraint of the material stiffness in the various principal directions of the composite has also been imposed because of the highly orthotropic nature of the fibrous composites. This constraint takes the form

$$ACM_i \leq \sum_{j=1}^{NPLYS} t_{\ell_j} E_{\ell ii_j}$$

where t_{ℓ_j} is the thickness of the jth ply and $E_{\ell ii_j}$ is the constitutive relation of the lamina in the ith component direction of the composite for the jth ply.

For the design of isotropic material wings for strength, only the von Mises' stress and minimum gage constraints are used. Similarly, for the design of laminated composite wings, only the modified distortional energy laminate strength failure criterion, the minimum gage, and the minimum stiffness failure criterion are considered.

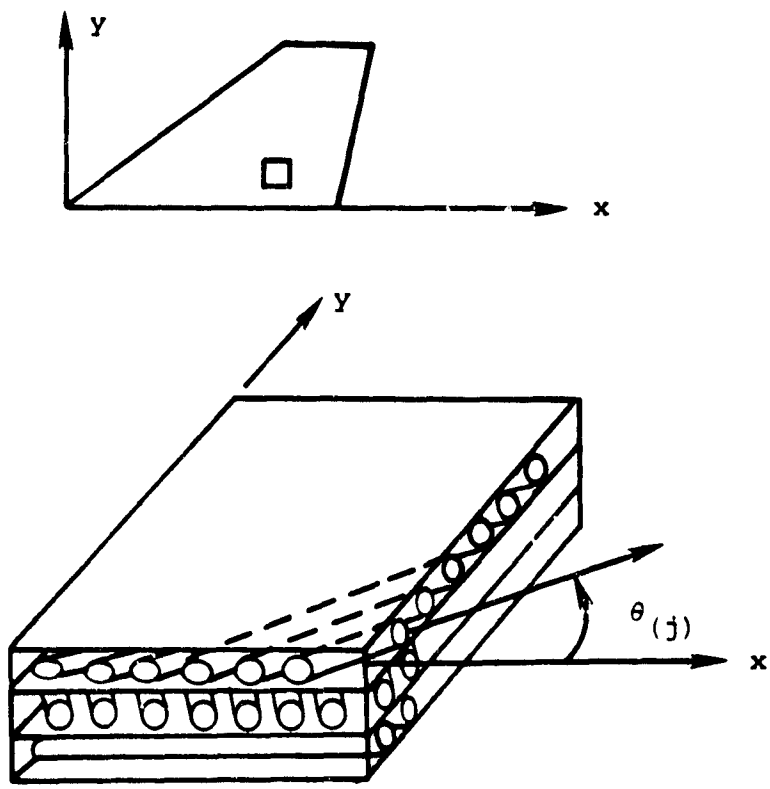

ORIENTATION OF COMPOSITE PLY ANGLES

Options and integer control variables.- A number of integer variables are included to control the flow of the program. These are split into two types: (1) those that determine the number or highest order coefficient of various inputs; and (2) those that provide optional control for flow of the problem. The latter are also used to avoid unnecessary computations.

The following are definitions of a number of inputs which are under the control of the user: NX,NY - numbers and highest order of chordwise and spanwise polynomials, respectively. (Default: NX=3, NY=5) their product determines the number of displacement and rotational degrees of freedom in the structural analysis. For the function describing the displacements, NX varies from 1 to NX; while NY varies from 3 to NY, reflecting the clamped-fixed boundary conditions at the root in the spanwise direction.

$$\Phi_w(\xi,\eta) = \sum_{i=1}^{NX}\sum_{j=3}^{NY} P_i(\xi)H_j(\eta)$$

The resulting degrees of freedom for displacement (NW), and rotation about the x- and y-axes (NB and NA) become:

$$NW = NX*(NY-2)$$

$$NA = (NX-1)*NY$$

$$NB = NX*(NY-1)$$

Description of Sample Input

This section describes the output from a sample input case. It is intended to act as a basic guide to many of the WADES input default conditions. The actual input data and the program copy of the input data with all the defaults included are shown.

Figure 23 is a direct copy of the input to the WADES program required to execute a minimum-weight strength design in the stand-alone program mode. Figure 24 is the output of the input data in figure 23. In most cases default values for program options have been used to demonstrate the minimum input required to execute the program. The input block designation as given in the input user guide has been written in the right margin at the start of each block.

Block 1 is a summary of program options. The multiple values of IFT,JFT,etc., are reserved for prescribing a different number of thickness function coefficients when designing multilayered composite wings. Zero values of a given parameter usually indicate a non-active option. Block 2 contains a summary of the variables used to define the initial geometry. The values for the thickness function, FTT, used in this sample data have been a good first estimate to the thickness distribution on a variety of aircraft. The value of zero for the depth function will later be replaced by a value computed from the alternate depth representation indicated.

Block 3 and Block 4 contain the required material properties and design flight conditions. It is noted that the wing loading shown in the input is not used in the program, but is later computed according to the option, IANAL(2,j). Block 5 contains the concentrated load information that varies with flight condition. The value of the load at each station corresponds to the location of an external store or force on the wing. The only Block 6 constraint used is the maximum allowable stress. The other values are representative constraints but are not used in a strength design. Block 7 defines the optional parameters for the optimization routine, CONMIN. A zero value in this input returns to the prescribed default value on execution. No Block 8 or Block 9 information was read. These blocks are read only for the design of multilayered composite skins.

Description of Output

This section describes the output for the wing design program, WADES. The particular output obtained by the user is a function of the value of the print control options, IPRNT and JDUMP in namelist OPTNS. The amount varies from nothing for IPRNT=0 and JDUMP=0 to a debug level of print including a dump of the various program matrices for IPRNT≠0 and JDUMP=5. A brief outline of available output including a sample case is given here.

The basic arrangement of the output follows the calculation of the design. For a given analysis of the wing, and depending on the value of the print controls, the available output includes a printout of the matrices K, A, B, MX, $X^T K_R X$, $X^T MX\ X$, and the vectors $\{U\}$, $\{EIG\}$, and $\{X\}$ for each of the flight conditions in which it is used, and a dump of weights, stresses, and design variables contained in the common blocks. The output of variables contained in common blocks is performed by routine

WOUT. A sample case from the F-5 design is shown in figure 25. For a given design cycle, the above output is optionally available for every re-analysis or just for the first and last designs. See the user's guide for the input of appropriate values of IPRNT. At the completion of the design cycle a summary output of common variables, and plots of the depth and thickness distributions, the statically loaded deformed shape and the normal modal shapes, the value of the flutter determinant versus Mach number and frequency, and the shear and moment distributions versus span are optionally available.

Figure 25 contains the basic summary of the current design. The print control required to obtain the appropriate output has been designated on the right side of the printout. The first line contains the title of the prescribed run. The root chord, semispan, and sweep angles are a repeat of the input. The total wing area is the theoretical planform area.

The weights shown contain the total weight computed from the skin and core weights for the designated number of wings. The skin and core weights are those computed by integrating the material and core distributions over the total wing area. The fuel-available weight is the product of the volume contained within the structural wing box, the density of fuel, and the fraction of structural volume available for fuel. The skin structure and core structure weights are those computed by integrating the skin and core material distributions over the structural planform. These structural weights are the weight components from which the regression analysis determined the wing non-optimum weight factors. The locations of the centers of mass of the various weight components of a single wing are included with respect to a reference coordinate system located at the junction of the wing leading edge and the root chord.

The thickness, depth, and camber coefficients are the values of the coefficients in the polynomial functions describing the corresponding wing properties. See the definition of each function to determine the power of ξ and η to which the coefficient is attached. If the value of the wing thickness-to-chord ratio is prescribed, the functional distribution for the depth is obtained from a linear fit of the maximum chord depth.

The stress distribution with respect to ξ and η as computed from von Mises' stress resultant is printed next. The values for each of the design flight conditions are shown. These stresses and their locations are the values used to design the thickness coefficients for the isotropic

material wing. The component edge loadings shown next are the component loads per unit inch at each of the stations at which the von Mises' stresses are computed. These are used to design the thickness coefficients for the multi-layered composite material wing. The values of thickness or ply thicknesses as determined from the functional distribution are also given at each station.

A summary of the number of computed aerodynamic and structural responses versus the flight conditions for which they were analyzed follows. For the static analysis using a constant-pressure loading the value of the angle of attack is only estimated from an approximate value of the lift curve slope. The tip deflections, natural frequencies, and flutter Mach number and frequency (not shown in figure 25) are the values used to compute the appropriate design constraints.

The last item is a summary of the CPU time used during the computation of each of the various functions.

Program and Subprogram Descriptions

The following are brief descriptions of each of the routines in the WADES program. These descriptions are not intended to provide a detailed breakdown of program flow, but should only indicate to the reader the basic usage of each routine.

Routine	Description and Comments
Main Stand-Alone Program	
WADES	Main calling program to organize reading of input and execution of analysis or design routines. Branching to the appropriate routines is governed by choice of control parameter, ICONTR.
Basic Structural Analysis Routines	
ANLYS	Routine to organize the various analyses of the equivalent plate model of a trapezoidal wing. Sets up following solutions:

Static:

$$[K_R + A]\{w\} = \{Q\}, \quad \text{also} \quad \{\sigma\}, w_{LE}, w_{TE}$$

Natural Frequency:

$$([K] - \omega^2[M])\{w\} = 0$$

Flutter:

$$|-\omega^2[M] + i\omega[B] + [K_R + A]| = 0$$

Divergence: (not available in ACSYNT version)

$$([K_R] + \lambda[A])\{w\} = 0$$

Print controls IPRNT, JDUMP and control matrix IANAL are used to control execution of each phase of the calculation of the various analyses and output. See figure 26 for flow chart of basic subroutine flow through routine.

WINIT — Routine to generate established boundary conditions, initial geometric variables, composite properties, and weights. Also computes approximation to depth function, $d(\xi,\eta)$, as a function of t/c and the location of maximum t/c at root and tip.

STIFF — Routine to build the trapezoidal wing stiffness matrix.

Constitutive Relation:

$$\begin{Bmatrix} \sigma_x \\ \sigma_y \\ \tau_{xy} \\ \tau_{xz} \\ \tau_{yz} \end{Bmatrix} = \begin{bmatrix} D11 & D12 & & & \\ D12 & D22 & & & \\ & & D33 & & \\ & & & D44 & \\ & & & & D55 \end{bmatrix} \begin{Bmatrix} \epsilon_x \\ \epsilon_y \\ \gamma_{xy} \\ \gamma_{xz} \\ \gamma_{yz} \end{Bmatrix} = [D]\{\epsilon\}$$

Strain-Displacement Relationship:

$$\{\epsilon\} = \begin{Bmatrix} -z\dfrac{\partial\alpha}{\partial x} \\ -z\dfrac{\partial\beta}{\partial y} \\ -z\left(\dfrac{\partial\alpha}{\partial y} + \dfrac{\partial\beta}{\partial x}\right) \\ \dfrac{\partial w}{\partial x} - \alpha \\ \dfrac{\partial w}{\partial y} - \beta \end{Bmatrix} = [\Phi]\{u\}$$

Combined Skin and Core Orthotropic Properties:

$$D11 = d_{s11} d^2 t + \frac{2}{3} d_{c11} d^3$$

$$D22 = d_{s22} d^2 t + \frac{2}{3} d_{c22} d^3$$

$$D33 = d_{s33} d^2 t + \frac{2}{3} d_{c33} d^3$$

$$D12 = d_{s12} d^2 t + \frac{2}{3} d_{c33} d^3$$

$$D44 = d_{s44} t + 2\, d_{c44} d$$

$$D55 = d_{s55} t + 2\, d_{c55} d$$

Stiffness Matrix in terms of the Component Degrees of Freedom:

$$[K] = \begin{bmatrix} K_{ww} & K_{w\alpha} & K_{w\beta} \\ & K_{\alpha\alpha} & K_{\alpha\beta} \\ SYM & & K_{\beta\beta} \end{bmatrix}$$

For multilayered composite, material properties are summed through depth.

STDC3 Routine to generate the thickness, depth and camber functions from the coefficients of polynomials.

$$t_t = \sum_{\delta=1}^{NTL} w_p(\xi,\eta) \cdot ft_{\ell_j}(\xi,\eta) + t_{m_j}$$

$$d = w_p(\xi,\eta) \cdot fd(\xi,\eta)$$

$$c = w_p(\xi,\eta) \cdot fc(\xi,\eta)$$

$$w_p = (\xi - TAN1\ \eta)(-\xi + TAN2\ \eta + RR)$$

LOADS Routine to compute the work equivalent loads on a trapezcidal wing planform using a constant-pressure loading. Also solves for static equilibrium displacement vector from

$$[K_R]\{w\} = \{Q_A\} + \{Q_W\} + \{Q_{Cm}\}$$

with substitution to obtain $\{u\}$.

DFLCTN — Routine to compute the displacement of the leading and trailing edges of the wing tip.

$$w_{LE} = \left\{\Phi_w(\xi_{LE}, 1.0)\right\}^T \{w\}$$

$$w_{TE} = \left\{\Phi_w(\xi_{TE}, 1.0)\right\}^T \{w\}$$

STRESS — Routine to compute the von Mises' stress and component strains as a function of ξ_k, η_k from the displacement vector, $\{u\}$. Component skin loads at each station are also computed for use with multilayered composites.

$$\{\epsilon\}_k = \left[\Phi(\xi_k, \eta_k)\right]\{u\}$$

$$\{\sigma\}_k = [D]\{\epsilon\}_k$$

$$\{N\}_k = t_t\{\sigma\}_k$$

DAERO — Routine to generate the steady and unsteady aerodynamic matrices A and B from piston theory.

$$[A] = 2\gamma M_o p_o \int_{S_A} \left(1 + \frac{\gamma+1}{2} M_o \frac{\partial d}{\partial x}\right)\{\Phi_w\}\left\{\frac{\partial \Phi_w}{\partial x}\right\}^T dx\, dy$$

$$[B] = \frac{2\gamma p_o}{a_\infty} \int_{S_A} \left(1 + \frac{\gamma+1}{2} M_o \frac{\partial d}{\partial x}\right)\{\Phi_w\}\{\Phi_w\}^T dx\, dy$$

MASSMX — Routine to generate a consistent mass matrix for the transverse inertia of a trapezoidal plate.

$$[M] = \frac{1}{g} \int_{S_A} \{\Phi_w\}\left(\int_{-d-t}^{d+t} p\, dz\right)\{\Phi_w\}^T dx\, dy$$

NATFR2 — Routine to set up and solve for the natural frequencies and eigenvectors of the free vibration of a trapezoidal plate.

$$([K_R] - \omega^2[M])\{w\} = 0$$

FLUTER — Routine to compute the flutter frequency and Mach number by minimization of the flutter determinant. This routine estimates the gradients of the determinant by finite difference and uses a Fletcher-Reeves conjugate direction algorithm to solve the minimization problem. The one-dimensional search is solved by ODM.

ODM — Routine adapted from Miura (ref. 16) to perform the one-dimensional search for the minimization of the flutter determinant using the golden section technique.

FLTMTX — Routine to generate the complex flutter matrix used to compute the determinant of the flutter equations.

Basic Structural Design Routines

MWT — Routine to organize the analyses and the generation of information for the minimum weight design of isotropic cover sheets on a trapezoidal wing. Routine calls for analyses of the wing, computes gradients of the objective function and initial information for geometric and strength constraints, and controls printing of output. Two versions of this routine are available:

(1) uses the feasible direction search - CONMIN

(2) uses a linear programming solution - SIMPLEX

MWT43 — Routine generates the gradient and constraint information calculations for MWT.

FMWT — Routine to generate the objective function, minimum gage, and strength constraints for the CONMIN version of MWT.

FMWT2 — Routine to calculate minimum gage constraints on the functional distribution of the thickness in the form to be used by CONMIN. It contains logic to by-pass calculation of non-active constraints.

MWT2	Routine to compute the gradients of the objective function (weight of the skin) with respect to the thickness design variables.
MWT4	Routine to compute the location of minimum gage or strength constraints on a trapezoidal wing planform. NSIG (ξ, η) locations are generated using even chordwise and spanwise increments.
MWTSTF	Routine to initialize CONMIN parameters for the minimum weight stiffness and strength constrained design of isotropic face-sheet wings. Routine prepares control options, print controls, and makes initial call to CONMIN.
FWTSTF	Routine to organize analyses for the calculation of the objective function (wing weight) and the minimum gage, strength, deflection, frequency, flutter, and divergence constraints. It serves as the subprogram called by CONMIN for the isotropic stiffness design, MWTSTF.
FMWT3	Routine to compute stiffness (deflection, natural frequency, flutter, and divergence) constraints.
MWTC	Routine to initialize and organize analyses for the minimum weight design of multilayered composite cover sheets on a trapezoidal wing. It calls for analyses, gradients of objective function, initial information for geometric minimum gage and strength constraints, and the generation of output.
MWTC43	Routine generates the gradient and constraint information for MWTC.
MWTC3	Routine to initialize CONMIN parameters for the number of design variables and the number and type of constraints.
MWTC5	Routine to initialize the minimum gage, TL(i,2) and TLMIN.
FMWTC	Routine to serve as the subprogram for the evaluation of the objective function and strength, stiffness, and minimum gage constraints for the design of multilayered composite wing cover sheets. The routine is organized to compute the analytic gradients of strength and minimum gage constraints. It is also set up for the calculation of finite-

difference gradients of displacement, frequency, and flutter constraints. This is an adaptation of routine COMPOS.

FMWTC3 Routine to compute the analytic gradients of the geometric minimum gage constraints with respect to the thickness function design variables and store them in the A matrix in common block CNMN2.

MWTCST Routine to initialize CONMIN parameters for the minimum weight design of multilayered composite cover sheets to satisfy stiffness and strength constraints. It prepares the control options, print controls, and initializations, calls CONMIN, and controls the generation of output.

FWTCST Routine to serve as the subprogram for the calculation of the objective function (wing weight) and strength, minimum gage, deflection, frequency, flutter, and divergence constraints for the design of multilayered composite cover sheets of a trapezoidal wing. Routine calls FMWTC to calculate constraints.

SWITCH Routine to store and retrieve analysis control parameter, IANAL. IANAL is stored and retrieved as a function of flight condition when calculating the analyses corresponding to active constraints.

SWTCHS Routine to test for active isotropic strength constraints and to set appropriate control parameter, IANAL, on or off. This is used only during stiffness design by FWTSTF.

SWTCHC Routine to test for active composite strength constraints and to set appropriate analysis control parameter, IANAL, on or off. This is used only during stiffness design by FWTSTC.

SWTCHD Routine to test for active stiffness (deflection, frequency, flutter or divergence) constraints and to set appropriate analysis control parameter, IANAL, on or off.

Input/Output Routines

WINPUT	Routine to read and make a copy of the input. The first pass through this routine sets the program defaults. See WADES user's manual for a description of variables read.
WOUTPT	Routine to organize printing of detailed output and plots. Amount of output is determined by choice of control parameters IPRNT, JDUMP, and IPLOT.
WOUT	Routine to output all variables in common blocks BWSAV and BSTRCW.
MATRLS	Routine to initialize material properties for three different wing cover sheets: (1) aluminum; (2) titanium; and (3) graphite/epoxy.
COMP14	Routine to read the analysis/design variable transformation for composite material thickness variables of ply orientations.
COMP25	Routine to read and write a copy of the composite input data for direct input of lamina properties.
COMP30	Routine to read and initialize the additional optional parameters of CONMIN. Program is initialized to default values on first call.
MXOUT	Routine to generate the output of a general matrix, A(N,M).
DISTRB	Routine to produce a contour plot of the thickness, depth, or camber functional distributions versus (x,y) on the wing planform.
PLTDFL	Routine to produce a contour plot of the lateral displacements or mode shapes versus (x,y) on the wing planform.
PLTFLT	Routine to produce a contour plot of the flutter determinant versus ω and Mach number.
PLTLDS	Routine to generate plots of the loading per unit span due to the weight of the skin and core and the aerodynamic spanwise loading. An output of the area and moment of inertia of the structure is also included.

PLTSHR	Routine to generate a plot versus span of the shear distributions due to skin, core, and aerodynamic loadings on a trapezoidal wing. The resulting bending-moment distributions, including discrete loads, are also output.
COMP19	Routine to output a table of active constraints during composite design.

General Utility Routines

These are general routines for matrix analysis and algebraic function manipulation. Those routines which operate on functions of (x,y) assume the polynomial function is of the form

$$p(x,y) = \sum P_{ij} x^{j-1} y^{i-1}, \qquad i=1,IP, \text{ and } j=1,JP$$

where $i+j-2 \leq \max(IP,JP)-1$, and where the coefficients P_{ij} are stored as a single vector. For example, if IP=3 and JP=4, the polynomial is written

$$\begin{aligned} p(x,y) = {} & P_1 + P_4 x + P_7 x^2 + P_9 x^3 \\ & + P_2 y + P_5 xy + P_8 x^2 y \\ & + P_3 y^2 + P_6 xy^2 \end{aligned}$$

Routine	Description and Comments
MULTC, MULTC2	Routines to multiply two polynomials together: $C(\xi,\eta) = A(\xi,\eta) \times B(\xi,\eta)$
ADDC, ADDC2	Routines to add two polynomials together: $C(\xi,\eta) = A(\xi,\eta) + B(\xi,\eta)$
DXIC	Routine to generate the derivative of a polynomial with respect to ξ: $C(\xi,\eta) = \partial A(\xi,\eta)/\partial\xi$
VALUE	Routine to evaluate the polynomial for a given value of ξ_k: RESULT = $P(\xi_k)$

VALUE2 — Function to evaluate a polynomial of two variables for a given value of ξ_k, η_k:

$$\text{VALUE2} = A(\xi_k, \eta_k)$$

XPOLY — Routine to evaluate a polynomial of two variables along a line of constant η_k to form a polynomial function only of ξ:

$$AX(\xi) = A(\xi, \eta_k)$$

PMLT — Routine to generate a set of polynomials, their first two derivatives, and the product of any two combinations of the above. These are used as the chordwise displacement functions. Both ordinary and orthogonal polynomials are available.

HMLT — Routine to generate a set of spanwise polynomials, their first two derivatives, and the product of any two combinations of the above. These are used as the spanwise displacement functions. Both ordinary and orthogonal polynomials are available.

WINTG — Routine to perform the double integration over the wing surface of the product of three polynomials:

$$\text{RESULT} = \bar{R} \cdot S \int_A H(\eta) D(\xi, \eta) P(\xi) d\xi \, d\eta$$

where H and P are products of the displacement functions and D is a function distributed over the wing surface.

CVLI — Routine to generate a table of integrated values of ξ^{i-1}, η^{j-1} over a given trapezoidal planform:

$$\text{BINTG}(i,j) = \bar{R} \cdot S \int_f^1 \int^g \xi^{i-1} \eta^{j-1} d\xi \, d\eta$$

FPLAN — Function to evaluate the planform polynomial:

$$\text{FPLAN} = (\xi_k - \text{TAN1}\ \eta_k)(-\xi_k + \text{TAN2}\ \eta_k + \text{RR})$$

FXI — Routine to compute the ξ location in the nondimensional Cartesian coordinate space of a constant fraction of chord on the trapezoidal wing planform:

$$FXI = TAN1\ \eta_k + c[RR - \eta_k(TAN1 - TAN2)]$$

SOLVE1 — Routine to solve a system of equations by Gauss elimination:

$$A \cdot \overline{X} = \overline{b}$$

EIGENR, TRED2, TQL2 — Routines to solve the real eigenvalue problem in the form:

$$A \cdot \overline{X} - \lambda B \cdot \overline{X} = 0$$

where A is symmetric and B is symmetric positive definite.

PAS003 — Routine adapted from program PASS to reduce a positive definite NxN matrix contained in A to an NRxNR matrix:

$$A = \begin{bmatrix} A11 & A12 \\ A21 & A22 \end{bmatrix} = \begin{bmatrix} (A11 - A12 \cdot A22^{-1} A21) & A12 \\ (A22^{-1} A21) & 1 \end{bmatrix}$$

PAS030 — Routine adapted from program PASS to calculate the absolute value of the determinant of a complex NxN matrix by Gauss elimination without pivot search.

WDUMP — Routine to putput the complete set of common blocks of the WADES program in the event of a major error return from a subprogram. Program is terminated in case of error. Routine may also be used to obtain a dump of the common blocks in certain cases. ACSYNT version of routine only sets the return error code.

CPUTIM — Routine to compute the absolute and relative CPUTIM during execution.

BUFFER — Connects the analysis and design variables in routines MWT and MWTSTF.

Composite Analysis and Design Routines

These routines are obtained directly or adapted from the COMPOS program.

COMP07 Computes the transformation:

$$[R_j] = [R_{\ell j}]^T [E_\ell] [R_{\ell j}]$$

COMP08 Sums the composite stiffness from lamina properties:

$$[A_c] = \sum_{j=1}^{NL} t_{\ell j} [R_j]$$

COMP09 Computes gradients of composite strain with respect to lamina thicknesses; $\partial\{\epsilon_c\}/\partial t_\ell$.

COMP10 Computes gradients of strength failure criteria with respect to lamina thicknesses; $\partial\{g\}/\partial t_\ell$.

COMP11 Transforms ply or thickness design variables into analysis variables by appropriate transformation.

COMP12 Transforms thickness design variable of polynomial function into respective lamina thicknesses.

COMP17 Routine to multiply gradients by analysis/design variable transformation and store in A matrix of CONMIN.

COMP18 Multiplies gradients by analysis variable/thickness function transformation and stores in A matrix of CONMIN.

COMP20 Computes the gradients of the composite strain with respect to the lamina ply orientations; $\partial\{\epsilon_c\}/\partial\theta$.

COMP21 Computes gradients of strength failure criteria with respect to the lamina ply orientations; $\partial\{g\}/\partial\theta$.

COMP26 Computes constituent properties and makes a summary output of composite and lamina properties.

COMP27 Computes gradients of lamina transformations with respect to ply orientations; $\partial R_{\ell j}/\partial\theta$.

COMP28 Computes gradients of composite stiffness A_c with respect to thickness variables; $\partial A_c/\partial t_\ell$.

COMP29 Computes gradients of composite stiffness A_c with respect to ply orientation; $\partial A_c/\partial\theta$.

COMP31 Computes composite failure criteria, $\{g\}$.

Character Plotting Routines

ARPLOT	Routine generates a three-dimensional character plot of vectors of X, Y, and Z.
PLOTA2	Routine to plot NY curves of Y versus X.
PLOTA5	Routine to provide rounding of scaling variables to a specified exponent.
PLOTA6	Routine to round off scaling to nearest acceptable plotting scale.
PLOTA7	Routine to initialize a row of plotted output including location of X and Y axes.
PLOTA8	Routine to select scales, round maximum and minimum values to acceptable values, and locate X and Y axes.
PLOTA9	Routine to generate linear and logarithmic scaling of the Z coordinate variables to acceptable values for use with contour plotting.

Numerical Optimization Routines

CONMIN	Subprogram and associated routines for the solution of constrained minimization problems. Called by MWT, MWTSTF, MWTC, and MWTCST. See reference 14 for user's manual and description of parameters.
SMPLX1, SMPLX2	Subprograms for the solution of the linear programming problem. Routine is called by alternate form of MWT.

Use of Modified Strip Loading Routines

In order to use the codes for the modified strip loadings described in Appendix C two routines used to generate loads in the current WADES program have to be replaced with their corresponding equivalents before the start of execution. The codes for the strip loads are arranged such that no program changes have to be made in order to accommodate them in the present program flow. The two routines to be substituted for are DAERO and LOADS. Seven additional routines are also called by the above two substitute routines.

Since the modified strip analysis is limited to subsonic flight conditions, the use of the corresponding computer codes also restricts the program to the consideration of Mach numbers perpendicular to the quarter-chord line of less than unity. That is, the free-stream Mach number must be such that

$$M_o \cos \Lambda \leq 1$$

Though this is an absolute limit on the program, practical considerations suggest that $M_o \cos \Lambda$ should not be in the transonic range either. This Mach number restriction has also led to the elimination of unsteady aerodynamic codes using piston theory, and thus the calculation of supersonic flutter is no longer a program option in this mode. The only input modification required to use the modified strip analysis code is for the generation of the spanwise shear and moment plots. The plotting control option must be changed to IPLOT(8)=3 to obtain plots. All associated panel geometry and transformations required to interface the discrete loadings with the plate model are generated internally.

Description of Modified Strip Loading Routines

The following are brief descriptions of each of the modified strip analysis routines in the WADES program. These routines are inserted at program load time.

Routine	Description and Comments
DAERO	Alternate routine to compute and invert aerodynamic matrix, $[S_1]$, and to generate the transformation $[T_w]$ and $[T_\alpha]$ for modified strip static load analysis. Transformation $[T_\alpha]$ defines the relations between the local angles of attack, $\{\alpha\}$, and the lateral displacement, $\{w\}$. Transformation $[T_w]$ defines the relation between the work equivalent load vector and the strip panel lift. The matrices are stored as: $A(i,j,1) = \left[4m_o\right][S_1]^{-1}$, $A(i,j,2) = [T_\alpha]$, and $A(i,j,3) = [T_w]$

LOADS	Substitute routine to compute the work equivalent modified strip loads using a Ritz-type analysis and to solve for the static displacements vector, {u}. Spanwise shear and moment distribution plots are called for here because of data transfer limitations.
EQUILK	Routine to compute the values of the root angle of attack, tail load, lift distribution, trim aileron deflection, and structural deformation required for static equilibrium in maneuvering flight for symmetric and nonsymmetric planforms. Routine has been adapted to accept the stiffness form of structural and aerodynamic matrices.
MXS1	Routine to compute the aerodynamic influence coefficient matrix, S1. This matrix is computed for symmetric and nonsymmetric planforms and for symmetric and antisymmetric loading conditions. For symmetric planforms, y=0 is the centerline, and the plane of symmetry is the X-Z plane.
PLOAD3	Routine to generate plots of the loading per unit span due to the weight of the skin and core and due to spanwise loading from modified strip theory. An output of the area and moment of inertia of the structure is also included.
SHEAR	Routine to generate spanwise plots of the shear distributions due to skin, core, and modified strip aerodynamic loadings on a trapezoidal wing. The resulting bending-moment distributions, including discrete loads, are also output.
PAS001	Routine adapted from the PASS program to form the LU decomposition of the positive definite matrix A.
PAS002	Routine adapted from the PASS program to solve the system of equations LU*X = B, by forward and backward substitution.
PASINV	Routine adapted from PAS002 to form the inverse of matrix A by forward and backward substitution on the identity matrix. The forward substitution initializes the identity matrix.

Use of Supersonic Piston Theory Loads

In order to use the codes for the supersonic piston theory loadings, only the LOADS routine in the current WADES program has to be replaced with its corresponding equivalent. This direct substitution is made prior to start of execution. The codes for the piston theory leads are arranged such that no program changes have to be made in order to make the substitution. This LOADS routine uses the information from the default routine DAERO directly.

The theory in this routine is generally limited to aerodynamic flow fields in which supersonic Mach numbers exist everywhere on the wing surface. The aerodynamic pressure distribution is defined in the section on loads in the WADES user's manual. The equations solved to obtain the deformed shape of the wing are:

Vertical equilibrium: $$GLR = L_{S_A}(\alpha_o) - \{P_{S_A}\}^T\{w\}$$

Matrix equations: $$\left[K_R + A\right]\{w\} = \{Q_{S_A}(\alpha_o)\} + \{Q_w\} + \{Q_{cm}\}$$

The two equations are solved iteratively to obtain $\{w\}$ and α_o. The remaining displacements, $\{u\}$, are determined in terms of $\{w\}$.

Implementation on the Computer

The WADES program has been written in standard ANSI FORTRAN IV language. It has been run on both the CDC 7600 and IBM System 360/67 computers. Though the language is standard FORTRAN IV, minor changes in the codes must be made in order to make the program operational on both systems. These generally have to be made to account for the machine-dependent functions of the two computer systems. A summary of the differences between the codes for the two computers follows.

(1) Because the calls to the system clock vary between computers, the routine CPUTIM must be modified to call the machine-dependent clock of the particular computer.

(2) Routine MXOUT passes an eight-character title of the matrix to be printed. Because of the differences in word lengths between the two computer system, MXOUT must be modified to accept either two four-byte words for the IBM 360 or one ten-byte word for CDC by changing the dimension of PAR.

(3) Because of the differences in computer word length and the resulting loss of accuracy for the smaller word size, it is recommended that routines performing the polynomial integration be converted to double precision. All lines requiring switch changes for precision in the present version contain CDC or CDBL in the first four columns. Removal of the comment character on the appropriate double precision statements indicated is sufficient.

(4) Alternate routines for use with the CDC overlay systems were written in a number of cases. The non-overlay routines should be used with the IBM 360.

CONCLUSIONS AND RECOMMENDATIONS

The primary objectives of this study were the incorporation of the WADES programs as a wing design module of the ACSYNT program and the correlation of the weights and material distributions with existing aircraft. The first objective, integration of the WADES program into ACSYNT, was accomplished, and a demonstration case using the F-5A was executed to demonstrate program convergence. Default values for a number of optional parameters were defined and programmed to increase the program useability. Similarly, interfaces were written for variables used to define the wing geometry and loads in terms of ACSYNT descriptors.

The second objective, the correlation of weight and material distributions with existing aircraft, was investigated with two simultaneous approaches. In the first, a detailed comparison of material distribution and loading conditions was undertaken. This included a surface fit and detailed analysis of the thickness distribution of the upper skin of the F-5A. Comparisons of the assumed design loading conditions with the actual values were shown for maximum symmetric pull-up, and landing. The data were then recomputed using the design algorithms defined in the WADES program. In the second approach, the statistical determination of a basic non-optimum weight factor was undertaken using data from U. S. Air Force and U. S. Navy fighter aircraft. This included the analysis and design by the WADES program of the aircraft wings. A regression analysis using the actual and estimated values was made to correlate results for several wing-weight approximations.

It is concluded that the comparisons demonstrated in the F-5 study show reasonably good correlation for the estimation of the loads and material distributions, but do not show strong statistical correlation for the breakdown of weights considered. The subsonic loads in figure 10 show the best correlation with actual F-5 data, especially for torsion. The results of the surface fit of the thickness distribution show good correlation with the deformed wing shape in figure 13, but they indicate a program deficiency in modeling the structural planform. Though the function fits the thickness distribution closely, the inability of the structural model to represent the discontinuity in the structural planform results in grossly underestimating the material distribution at the tip (fig. 5). Conversely, the lack of modeling of the wing-fuselage junction produces the excessive bending moment at the root and a major discrepancy in the loads in figures 9 and 10. The resulting design of the F-5 wing by the WADES program similarly overestimates the required material distribution at the root as indicated in figure 5.

Though the material distributions do show some correlation with actual F-5 values, the calculated weight, even when the functional fit of the data is used, are typically 25 to 50 percent low on the weight of the structure. The even higher coefficients obtained in the regression analysis in Tables VI and VII, which also reflect the additional weight of leading-and trailing-edge structure, indicate the relatively high proportion of non-optimum structural weight. The values of the non-optimum weight factors recommended for usage with the present program are found in the sections on regression results for isotropic and composite wing designs.

As a result of the present correlation activity, a number of deficiencies and omissions were identified. They include deficiencies both in geometric and structural modeling and in critical capabilities for minimum acceptable aeroelastic modeling. The recommended corrections and improvements that can be made within the framework of the current program are as follows.

(1) The current modeling of the wing-fuselage junction is inadequate as seen from the loads in figures 9 to 11. The assumption that the wing is clamped at the centerline rather than at a finite body radius can seriously misrepresent the spanwise shear and moment distributions,

especially for low-aspect-ratio configurations where a significant portion of the planform area is contained within the body. This effect is twofold: first, the aerodynamic load is considered to be distributed over the theoretical planform rather than the exposed planform; and secondly, the increased structural span produces higher bending moments and therefore higher required material gages at the root. The modifications recommended to correct this modeling deficiency are first to use two concentrated loads located at the wing-fuselage junction to react the shear and torsion at the root and secondly to reformulate the statics to distribute the pressure load only over the exposed planform.

(2) Over half of the F-5 wing panels were identified as buckling critical as seen from the stresses in Table B-II in Appendix B. The only strength failure criterion currently used with the WADES program is an ultimate failure criterion on the material itself. The modification recommended to correct this deficiency is to include a simplified buckling failure criterion such as the ones in figures B-1 and B-2. This could be effected by modification of the failure criteria in the design phase to include a buckling stress interaction curve.

(3) The current structural model of the skin is that of an isotropic cover plate which ignores the effects of stiffeners and spar flanges. It is recommended that this be reformulated as an effective skin-thickness model. The effective thickness would then be computed on the basis of stiffener spacing and size. This modification would complement the inclusion of the previously recommended buckling constraint by establishing the buckling panel size. It will also be used to improve the estimation of non-optimum weight.

(4) The estimation of the cross-sectional area of structural material in figure 5 identified a program deficiency, namely, that the restriction of the structural planform to a single trapezoid severely restricts the modeling of the actual planform. The mismatch is most obvious in figure 2 and is similarly reflected in the estimated structural weights. The modification recommended to improve this problem is the division of the planform into three trapezoidal segments. This should allow the flexibility to include a wing carry-through structure and the cutout for the landing-gear structure. It may be implemented by modification of the integration tables and the geometry necessary to describe them.

(5) The correlation coefficients determined from the regression analysis for the group of U. S. fighters considered did not show a conclusive trend for the combinations of variables considered. A further breakdown of the weights computed by the WADES program should be made. It is recommended that the regression on the weights be repeated with more attention toward obtaining correlations of component weights as well as of the total weight.

(6) The integration of the WADES program required the generation of the critical structural design loads from the flight profile of the aircraft mission. The temporary implementation of this was to design a specific routine to compute the critical conditions based on previously determined requirements of the aircraft. It is recommended that this routine be more generalized and that a check of FAR-25 or appropriate MIL requirements be made to determine a critical flight profile.

(7) The preliminary flutter analysis indicated that supersonic piston theory available in the current program version was not applicable for the flight profile of the F-5. It is recommended that an available subsonic flutter calculation be added to the program to fill this gap.

NIELSEN ENGINEERING & RESEARCH, INC.
Mountain View, California
August 1975

TABLE I

SUMMARY OF F-5A/B WING GEOMETRY

Aerodynamic Planform Description		
Engineering Symbol	Fortran Name	Value
$(t/c)_{root}$	TCR	0.048
$(t/c)_{tip}$	TCT	0.048
x/c at $(t/c)_{max}$	XTCR	0.50
c_{root}	R	134.5 in
b/2	SPAN	151.5 in
θ_{LE}	THET1	32.0°
θ_{TE}	THET2	-5.0°
Structural Planform Description		
Engineering Symbol	Fortran Name	Value
$(x/c)_{LE}$	XLE	0.15
$(1 - x/c)_{TE}$	XTE	0.55
PVA	PVA	0.

TABLE II

SUMMARY OF THREE CRITICAL FLIGHT CONDITIONS

Northrop Identification:		#104	#358B	#123C-5
Maneuver Description*:		Symmetric Pull-Up	Dynamic Landing	Symmetric Pull-Up
Engineering Symbol (units)	Fortran Name	Flight Conditions		
		1	2	3
h (ft)	ALT	21,500	0	0
M_o	XMO	1.05	0.22	0.90
SGW (lbs)	---	11,543	12,200	11,591
W_{fuel} (lbs)	WFUEL	0	0	0
W_{wing} (lbs)	WTWING	1041.7	1041.7	1041.7
NZ_{ult}	ANZ	9.8	4.0	9.8
W_{body} (lbs)	WBODY	9,597	10,432	9,359
x_{CG} (% MAC)	PMAC	11.4	10.2	10.7

Concentrated Mass (w_{cm}) Weight Information (lbs)

Description	Flight Conditions			Location	
	1	2	3	x/c	η
Landing Gear (main)	248	-4327**	248	0.55	0.40
AIM-9B/Tip Tank	204	115	115	0.10	1.00
Pylon WS 85	0	0	112.75	0.30	0.56
Pylon WS 114	0	0	119.	0.30	0.75

*Speed brakes are closed during all flight conditions.

**Percent of lift at landing equals 100 percent.

TABLE III

SUMMARY OF EQUIVALENT F-5A/B CORE MATERIAL CONSTANTS

Property	Value
E_{xc}	429,000 psi
E_{yc}	778,000 psi
G_{xyc}	0.0
G_{xzc}	39,400 psi
G_{yzc}	118,600 psi
ρ_{core}	0.00848 lbs/in^3

TABLE IV

SUMMARY OF AIRCRAFT WING GEOMETRY

Aircraft	$(t/c)_r$	$(t/c)_t$	Root Chord (in)	Semi-span (in)	θ_{LE} (deg)	θ_{TE} (deg)	$(x/c)_{LE}$	$(x/c)_{TE}$	PVA
F-5A/B	0.048	0.48	134.5	151.5	32.0	- 5.0	0.15	0.55	0.0
A-6A	0.09	0.06	182.6	318	30.0	9.0	0.25	0.30	0.5
A-7A	0.07	0.07	185.9	232.4	42.5	17.5	0.15	0.35	0.5
F-4C	0.064	0.027	282	230	51.0	13.0	0.36	0.35	0.5
A4D-2N	0.08	0.05	186	115	49.	0.	0.42	0.14	0.8
F8U-1	0.061	0.05	202	214	47.5	20	0.25	0.35	0.6
F9F-6	0.12	0.10	138	207.6	38.	24.	0.12	0.45	0.6
F104-A	0.036	0.036	155.8	131.4	22	-11.0	0.20	0.40	0.0
F-105B-1	0.055	0.04	180	210	48.5	32.	0.15	0.50	0.5

TABLE V

SUMMARY OF CRITICAL FLIGHT CONDITIONS

Aircraft	Flight Condition	h (ft)	M	SGW (lbs)	W_{FUEL} (Wing contained) (lbs)	W_{LG} (lbs)	W_{WING} (lbs)	n_z	P_{LIFT} (%)	W_{BODY} (lbs)	CONC. LOADS (lbs) (1)	(2)	(3) (x_{cg}, y_{cg})	(4)
F-5A/B	1	21,500	1.05	11,543	0	495.9	1041.7	9.8	0	9,597	248	0	0	0
	2	0	0.22	12,200	0	495.9	1041.7	4.0	100	10,432	-4327	115	0	0
	3	0	0.90	11,591	0	495.9	1041.7	9.8		9,359	248	204	113	119
											(0.55,0.40)	(0.1,1.0)	(0.3,0.56)	(0.3,0.75)
A-6A	1	25,000	0.80	35,051	100	0	4778	10.7	0	28,632	0	385	385	
	2	0	0.16	31,751	0	0	4778	6.2	67	23,566	-14,200	756	756	
	3	25,000	0.80	37,269	0	0	4778	9.5	0	28,694	0	836	836	
											(0.7,0.14)	(0.34,0.45)	(0.34,0.31)	
A-7A	1	25,000	0.85	26,203	911	0	3276	10.5	0	20,408	343	343	143	0
	2	0	0.19	24,431	0	0	3276	9.59	100	18,682	343	0	0	-10,950
	3	25,000	0.85	25,770	0	0	3276	9.2	0	18,588	343	1843	542	0
											(0.22,0.41)	(0.25,0.55)	(0.25,0.23)	(0.66,0)
F-4C	1	25,000	0.90	37,500	0	1589	4670	12.8	0	31,244	795			
	2	0	0.23	46,000	0	1589	4670	4.0	100	39,740	-1647			
											(0.42,0.51)			
A4D-2N	1	25,000	0.85	12,504	0	623	1587	10.5	0	8,800	623			
	2	0	0.18	11,556	546	623	1587	7.17	67	8,903	-9961			
											(0.5,0.3)			
F8U-1	1	25,000	0.90	21,782	1384	0	2765	9.6	0	17,633	-			
	2	0	0.20	19,514	0	0	2765	8.25	67	16,748	-			
	3	25,000	0.90	23,276	0	0	2765	9.52	0	20,511	-			
F99-6	1	25,000	0.80	15,600	0	554.3	2600.1	11.25	0	12,446	277			
											(0.5,3.3)			
F-104A	1	25,000	0.90	15,200	0	0	1181	11.0	0	14,019	0			
	2	0	0.25	13,800	0	0	1181	3.75	100	12,599	-5050			
											(0.38,0.25)			
F-	1	25,000	0.90	27,000	0	1611.6	3404	13.0	-	21,985	806			
											(0.6,0.46)			

ORIGINAL PAGE IS
OF POOR QUALITY

TABLE VI

REGRESSION ANALYSIS ON WEIGHT PREDICTION OF NAVES PROGRAM

CONSTANT W/S LOADS - OBJ=WTSS

AIRCRAFT	WWING	WTSS	WTCS	S
F-5A/B	1041.7	381.1	221.8	24403.0
F-5A/B	1041.7	318.8	221.8	24403.0
A-6A	4778.2	1475.8	3318.3	73766.0
A-7A	3275.8	1145.9	1736.8	53944.0
F-4C	4671.0	1682.7	1796.9	76607.0
A4D-2N	1587.3	322.5	1095.1	37293.0
F8U-1	2765.8	965.1	1352.6	53147.0
F9F-6	2600.1	679.6	1554.9	42814.0
F-104A	1180.8	340.3	409.8	30612.0
F-105B	3404.0	2843.8	879.6	53310.0

SUMMARY OF REGRESSION RESULTS

CONSTANT W/S LOADS - OBJ=WTSS

W1=B(1)*WTSS+B(2)*WTCS
W2=B2*WTSS+WTCS
W3=B3*WTSS
W4=BS(1)*WTSS+BS(2)*S/288.

B(1)= 0.9971 B(2)= 1.1803 B2= 1.1680 B3= 2.1159
BS(1)= 0.3269 BS(2)= 14.6781

AIRCRAFT	WWING	W1	P1	W2	P2	W3	P3	W4	P4
F-5A/B	1041.7	641.8	-38.4	666.9	-36.0	806.4	-22.6	1368.3	31.4
F-5A/B	1041.7	579.7	-44.4	594.1	-43.0	674.5	-35.2	1347.9	29.4
A-6A	4778.2	5388.0	12.8	5042.0	5.5	3122.6	-34.6	4241.9	-11.2
A-7A	3275.8	3192.5	-2.5	3075.2	-6.1	2424.6	-26.0	3123.9	-4.6
F-4C	4671.0	3798.6	-18.7	3762.2	-19.5	3560.4	-23.8	4454.4	-4.6
A4D-2N	1587.3	1614.1	1.7	1471.8	-7.3	682.4	-57.0	2006.1	26.4
F8U-1	2765.8	2558.7	-7.5	2479.8	-10.3	2042.0	-26.2	3024.1	9.3
F9F-6	2600.1	2512.8	-3.4	2348.6	-9.7	1437.9	-44.7	2404.2	-7.5
F-104A	1180.8	823.0	-30.3	807.3	-31.6	720.0	-39.0	1671.4	41.5
F-105B	3404.0	3873.6	13.8	4201.0	23.4	6017.1	76.8	3646.6	7.1

ORIGINAL PAGE IS
OF POOR QUALITY

TABLE VII

REGRESSION ANALYSIS ON WEIGHT PREDICTION OF WADES PROGRAM

MODIFIED STRIP THEORY LOADS (TN3030) - OBJ=WTSS

AIRCRAFT	WWING	WTSS	WTCS	S
A-6A	4778.2	942.2	3318.3	73766.0
A-7A	3275.8	863.6	1736.8	53944.0
F-4C	4671.0	1156.4	1796.9	76607.0
F8U-1	2765.8	778.9	1352.6	53147.0
F9F-6	2600.1	376.1	1554.9	42814.0
F-104A	1180.8	223.0	409.8	30612.0

SUMMARY OF REGRESSION RESULTS

MODIFIED STRIP THEORY LOADS (TN3030) - OBJ=WTSS

```
W1=B(1)*WTSS+B(2)*WTCS
W2=B2*WTSS+WTCS
W3=B3*WTSS
W4=BS(1)*WTSS+BS(2)*S/288.
```

B(1)= 2.5891 B(2)= 0.7553 B2= 2.0416 B3= 4.2795
BS(1)= 0.7588 BS(2)= 14.2054

AIRCRAFT	WWING	W1	P1	W2	P2	W3	P3	W4	P4
A-6A	4778.2	4945.9	3.5	5241.9	9.7	4032.1	-15.6	4353.4	-8.9
A-7A	3275.8	3547.8	8.3	3499.9	6.8	3695.8	12.8	3316.1	1.2
F-4C	4671.0	4351.3	-6.8	4157.8	-11.0	4948.8	5.9	4656.1	-0.3
F8U-1	2765.8	3038.3	9.9	2942.8	6.4	3333.3	20.5	3212.5	16.2
F9F-6	2600.1	2148.2	-17.4	2322.7	-10.7	1609.5	-38.1	2397.2	-7.8
F-104A	1180.8	886.9	-24.9	865.1	-26.7	954.3	-19.2	16[illegible] 1	42.2

ORIGINAL PAGE IS
OF POOR QUALITY

TABLE VIII

REGRESSION ANALYSIS ON WEIGHT PREDICTION OF WADES PROGRAM

COMPOSITE DESIGN - CONSTANT W/S LOADS - 70% WWING

AIRCRAFT	WWING	WTSS	WTCS	S
F-5A/B	729.0	89.0	221.8	24403.0
A-6A	3345.0	368.5	3318.3	73766.0
A-7A	2290.0	382.6	1736.8	53944.0
F-4C	3270.0	474.8	1796.9	76607.0
A4D-2N	1110.0	341.8	1095.1	37293.0
F8U-1	1935.0	284.6	1352.6	53147.0
F-104A	825.0	191.6	409.8	30612.0

SUMMARY OF REGRESSION RESULTS

COMPOSITE DESIGN - CONSTANT W/S LOADS - 70% WWING

```
W1=B(1)*WTSS+B(2)*WTCS
W2=B2*WTSS+WTCS
W3=B3*WTSS
W4=BS(1)*WTSS+BS(2)*S/288.
```

B(1)= 3.1780 B(2)= 0.6756 B2= 1.6218 B3= 6.4188
BS(1)= -1.6615 BS(2)= 14.5329

AIRCRAFT	WWING	W1	P1	W2	P2	W3	P3	W4	P4
F-5A/B	729.0	432.7	-40.6	366.1	-49.8	571.3	-21.6	1083.5	48.6
A-6A	3345.0	3412.9	2.0	3915.9	17.1	2365.3	-29.3	3110.1	-7.0
A-7A	2290.0	2389.1	4.3	2357.2	2.9	2455.6	7.2	2086.5	-8.9
F-4C	3270.0	2722.9	-16.7	2566.9	-21.5	3047.7	-6.8	3076.8	-5.9
A4D-2N	1110.0	1826.1	64.5	1649.4	48.6	2194.0	97.7	1314.0	18.4
F8U-1	1935.0	1818.3	-6.0	1814.2	-6.2	1826.6	-5.6	2209.0	14.2
F-104A	825.0	885.8	7.4	720.5	-12.7	1229.8	49.1	1226.4	48.7

TABLE IX

F-5A/B FLIGHT CONDITIONS DEFINED IN FLTLDS

Inputs to WADES

Flight Condition		1 - Max. Symmetric Pull-Up	2 - Dynamic Landing Impact
Altitude	(ALT)	25,000	0
Mach Number	(AMACH)	0.95	0.232
Fraction of Volume Available for Fuel	(PVA)	0.	0.
Ultimate Load Factor	(ALOAD)	9.8	4.0

Inputs Obtained from ACSYNT

Gross Weight at Takeoff	WGTO
Fuel Weight	WTFUEL
Weight of Landing Gear	WLG
Estimated Wing Weight	WWING

Equations Used to Calculate Structural Flight Conditions

Structural Gross Weight	(SGW):	WGTO-(1-RFUEL1)·WTFUEL	WGTO-(1-RFUEL2)·WTFUEL-2·WTANK
Fuel in Wings	(WFUEL):	PVA·WTFUEL·RFUEL1	PVA·WTFUEL·RFUEL2
Landing Load on Main Gear	(FLAND):	-----	$SGW \cdot \left\lvert \frac{PLIFT}{ALOAD} \right\rvert - WLG \cdot RMAING$
Weight of Body Components	(WBODY):	SGW-WWING-WLG·RMAING	$SGW \left\lvert \frac{PLIFT}{ALOAD} \right\rvert - WWING + FLAND$
Concentrated Loads (tip tank)	(L.G.)	WLG·RMAING/2. 0	-FLAND/2. WTANK

The following estimated values were used:

Fraction of fuel remaining	RFUEL1 = 0.49 , RFUEL2 = 0.4
Weight of empty tip tank	WTANK = 115 lbs
Ratio of main gear weight to total landing gear weight	RMAING = 0.82
Fraction of SGW of total lift at landing inpact	PLIFT = 1.0

TABLE X

OPTIONAL MATERIAL PROPERTIES DEFINED IN MATRLS BY CHOICE OF PARAMETER, ITYPES

ITYPE	1	2
Material	2024-T3 Aluminum*	6Al-4v Titanium
Ex	10,500,000 psi	16,000,000 psi
Ey	10,500,000 psi	16,000,000 psi
Gxy	4,000,000 psi	6,200,000 psi
Gxz	4,000,000 psi	6,200,000 psi
Gyz	4,000,000 psi	6,200,000 psi
νxy	0.3	0.3
νyx	0.3	0.3
SmaxT	63,000 psi	117,000 psi
SmaxC	63,000 psi	117,000 psi
ρ	0.100 lbs/in^3	0.160 lbs/in^3

*Reference: MIL-HDBK-5, August 1962.
Valid to 20^°F for 1000 hours.

Composite Material Lamina Properties

ITYPE	3
Material	Graphite/Epoxy*
EL11	21,000,000 psi
EL22	1,700,000 psi
GL12	650,000 psi
GL13	650,000 psi
GL23	650,000 psi
$\nu 112$	0.21
$\nu 121$	0.017
$\rho 1$	0.056 lbs/in^3
SL11T	180,000 psi
SL11C	180,000 psi
SL22T	8,000 psi
SL22G	30,000 psi
SL12S	12,000 psi
SL23S	12,000 psi
PHIDEL	0.0104

*Single-ply thickness, t_{ply} = 0.008 in;
void fraction, k_v = 0.0; and
fiber fraction, k_f = 0.50.

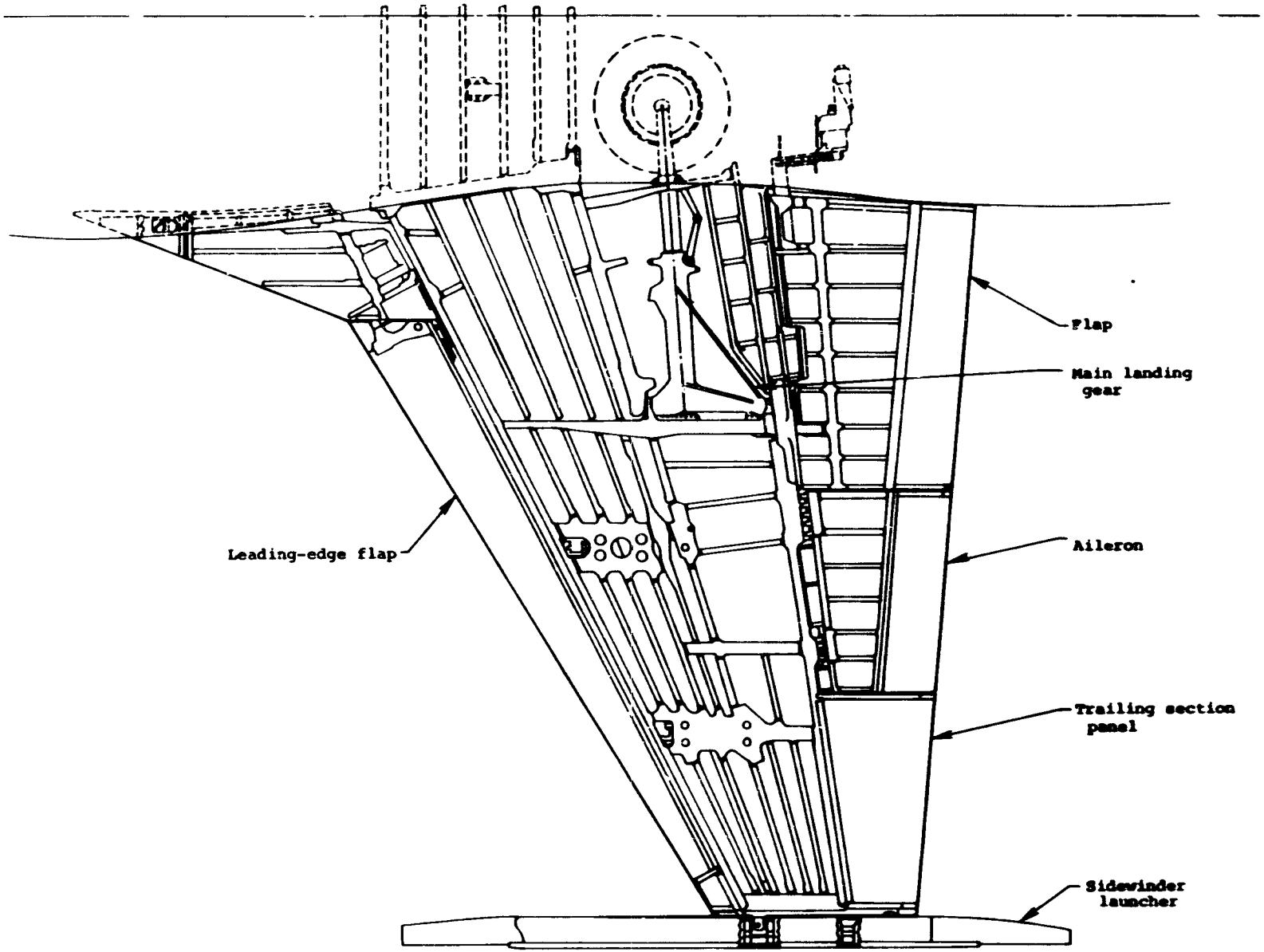

Figure 1.- Internal structural arrangement of F-5A/B wing.

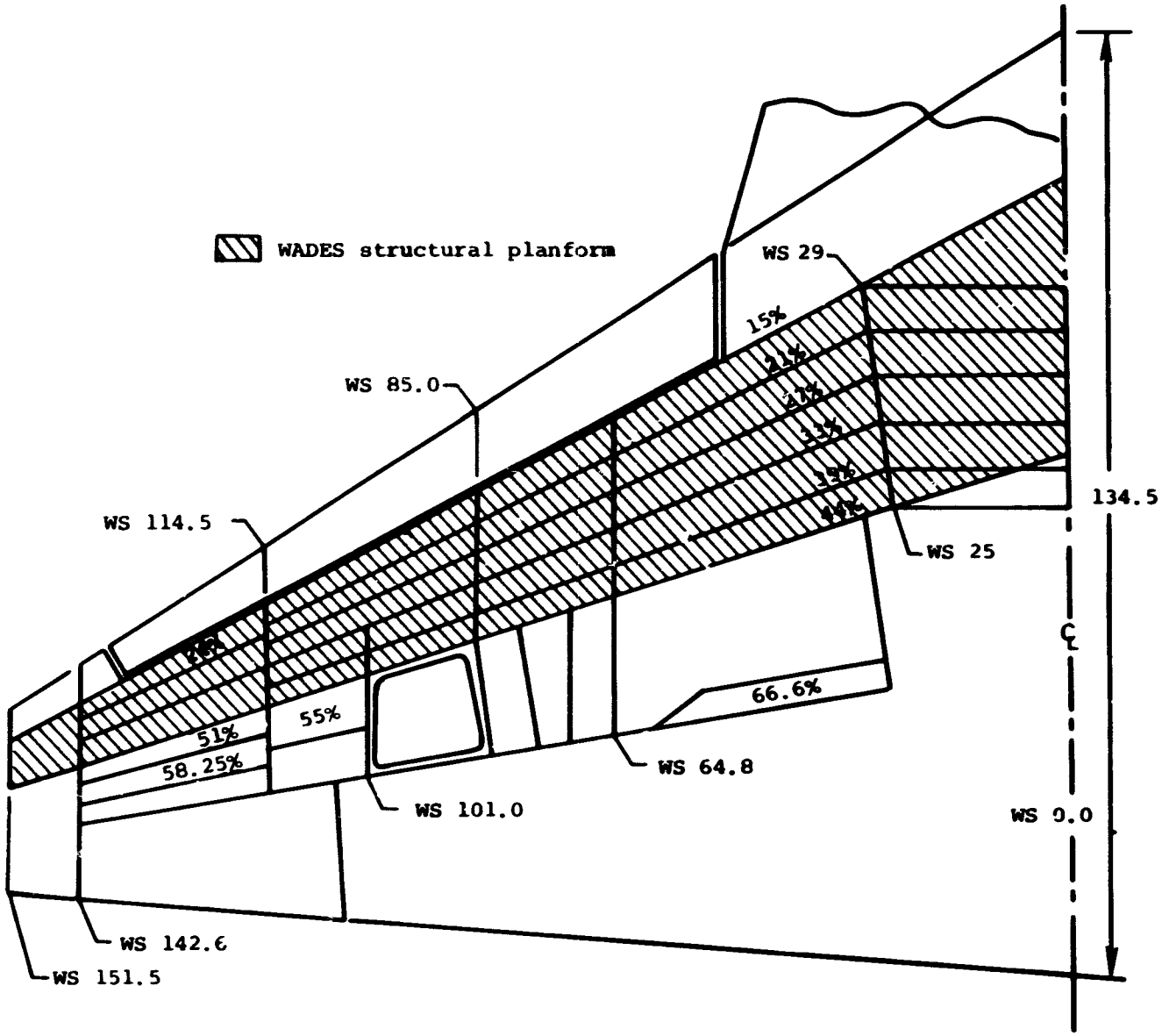

Figure 2.- Structural idealization of F-5 wing upper surface, spars, and ribs (ref. 2).

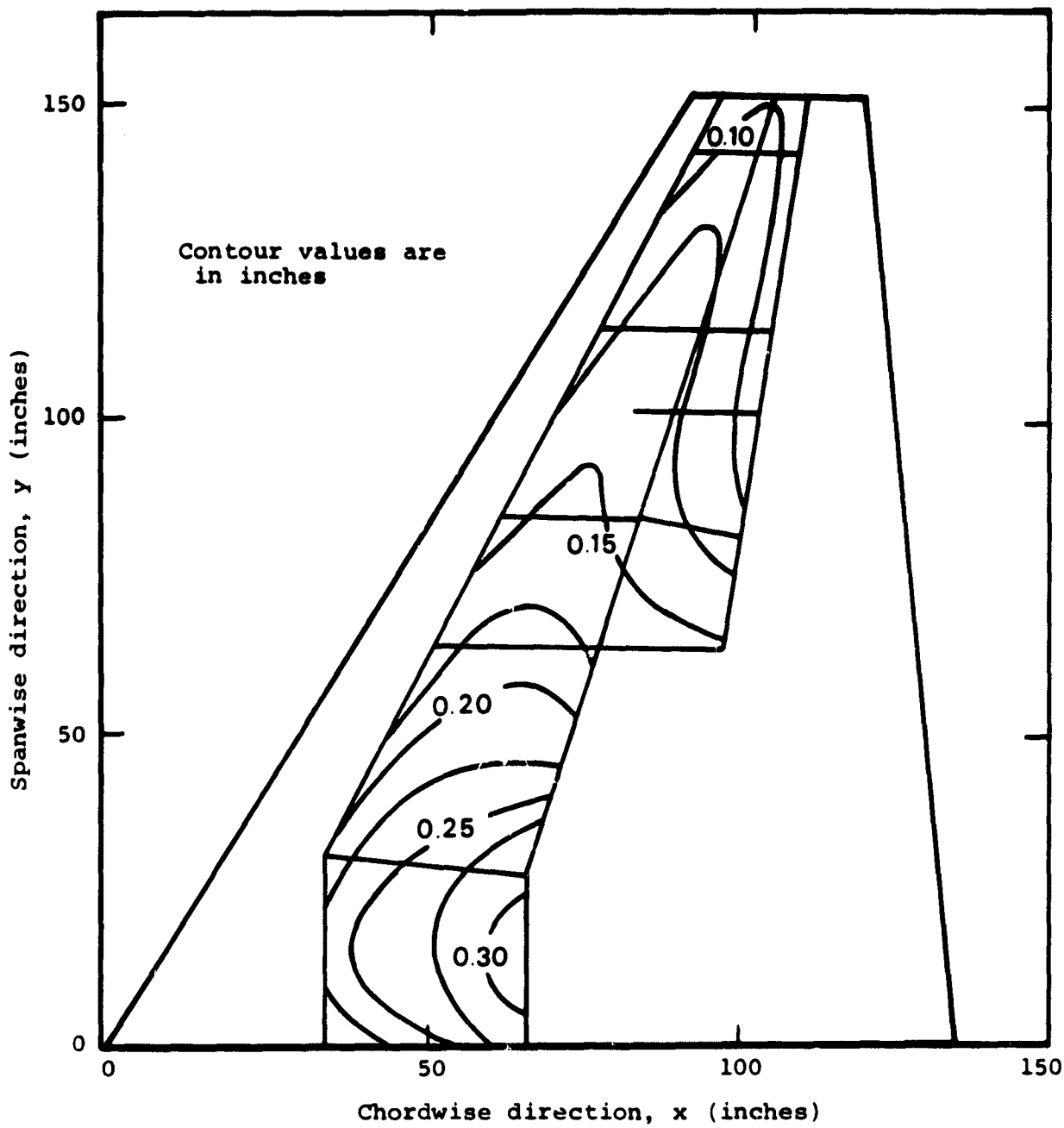

Figure 3.- Contour plot of thickness distribution, t, obtained from least-squares fit of F-5 upper wing cover plate.

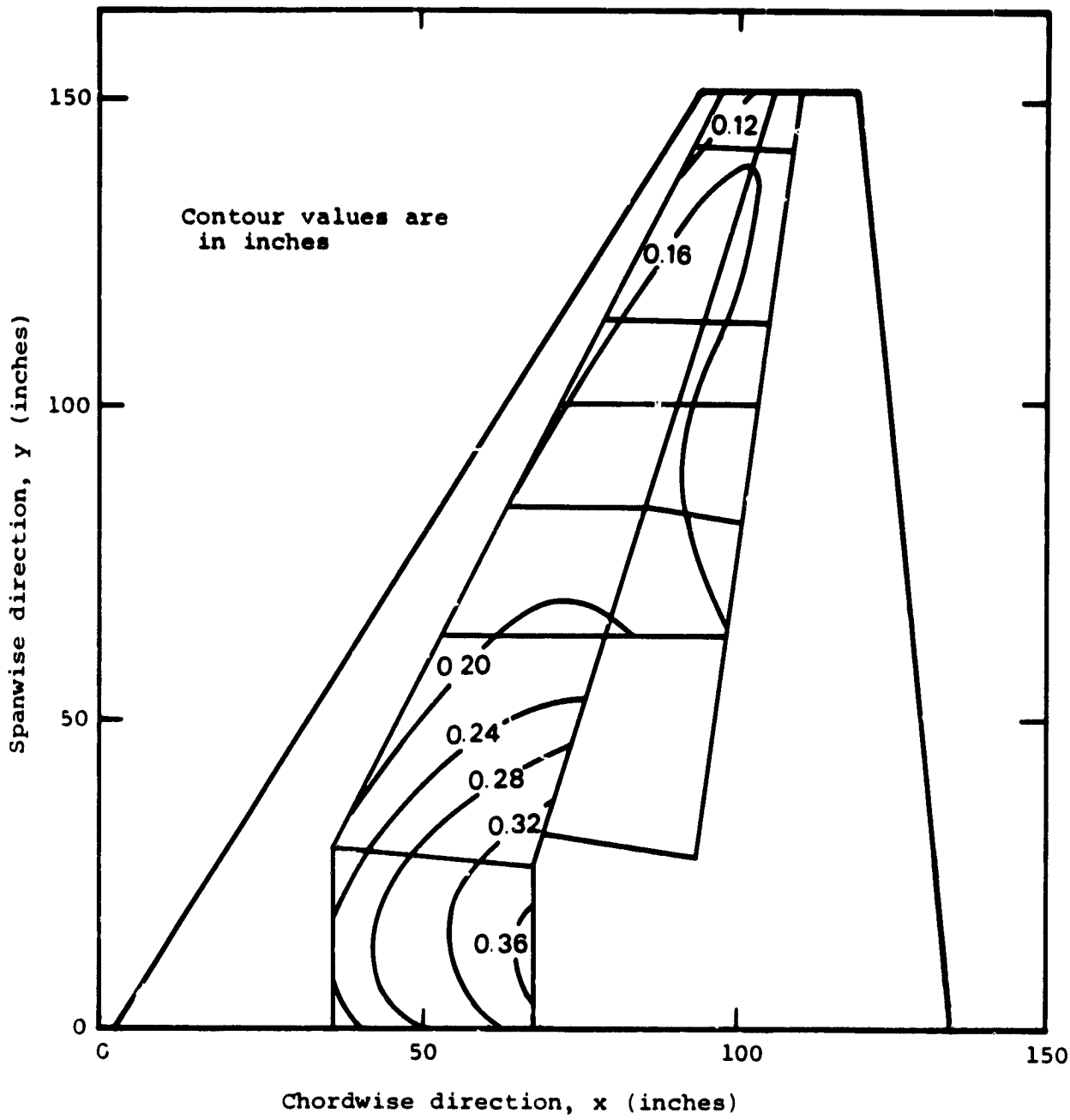

Figure 4.- Contour plot of effective thickness distribution, t_{eff}, obtained from least-squares fit of F-5 upper wing cover plate.

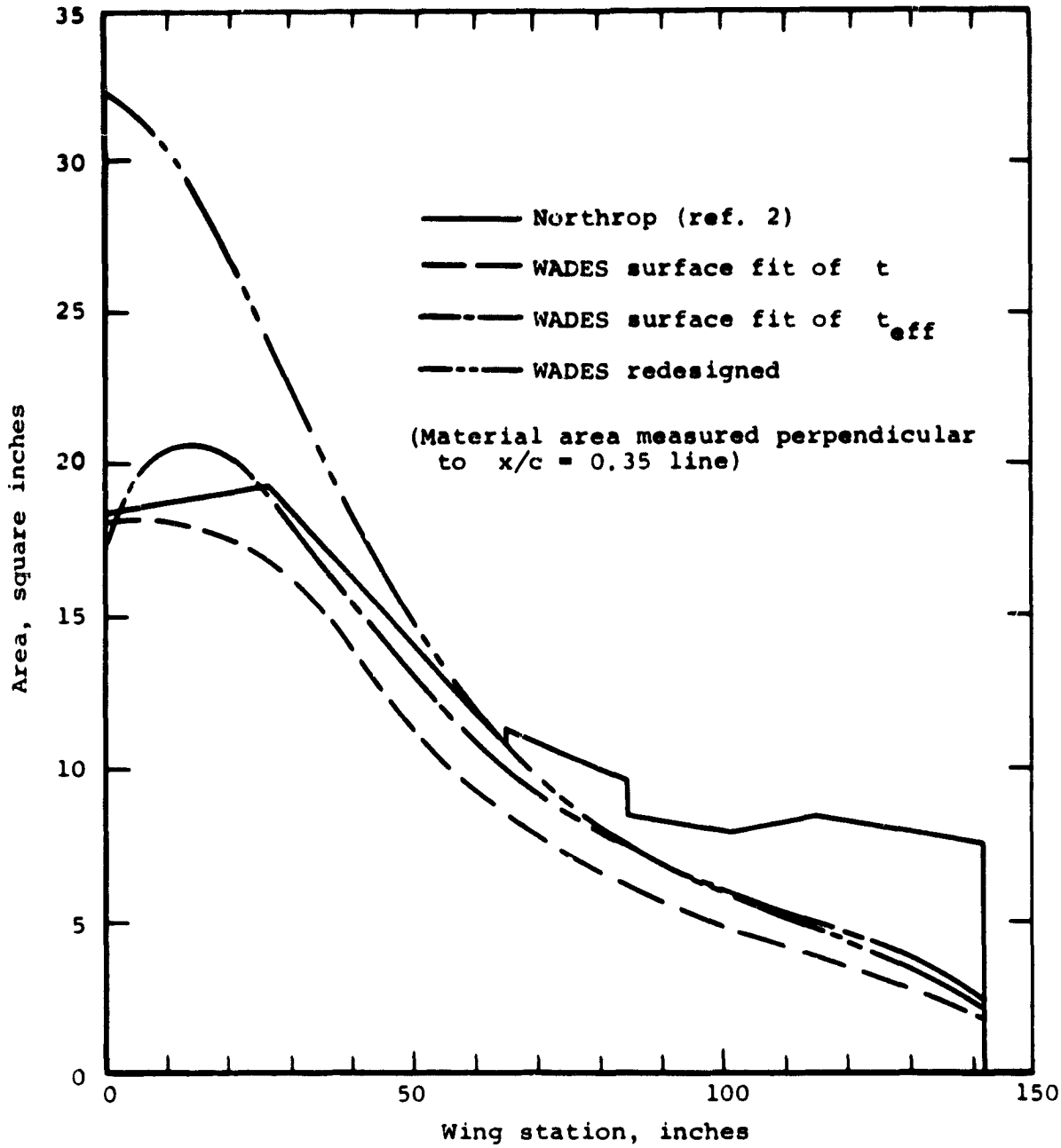

Figure 5 - F-5A/B cross-sectional area of structural material versus span.

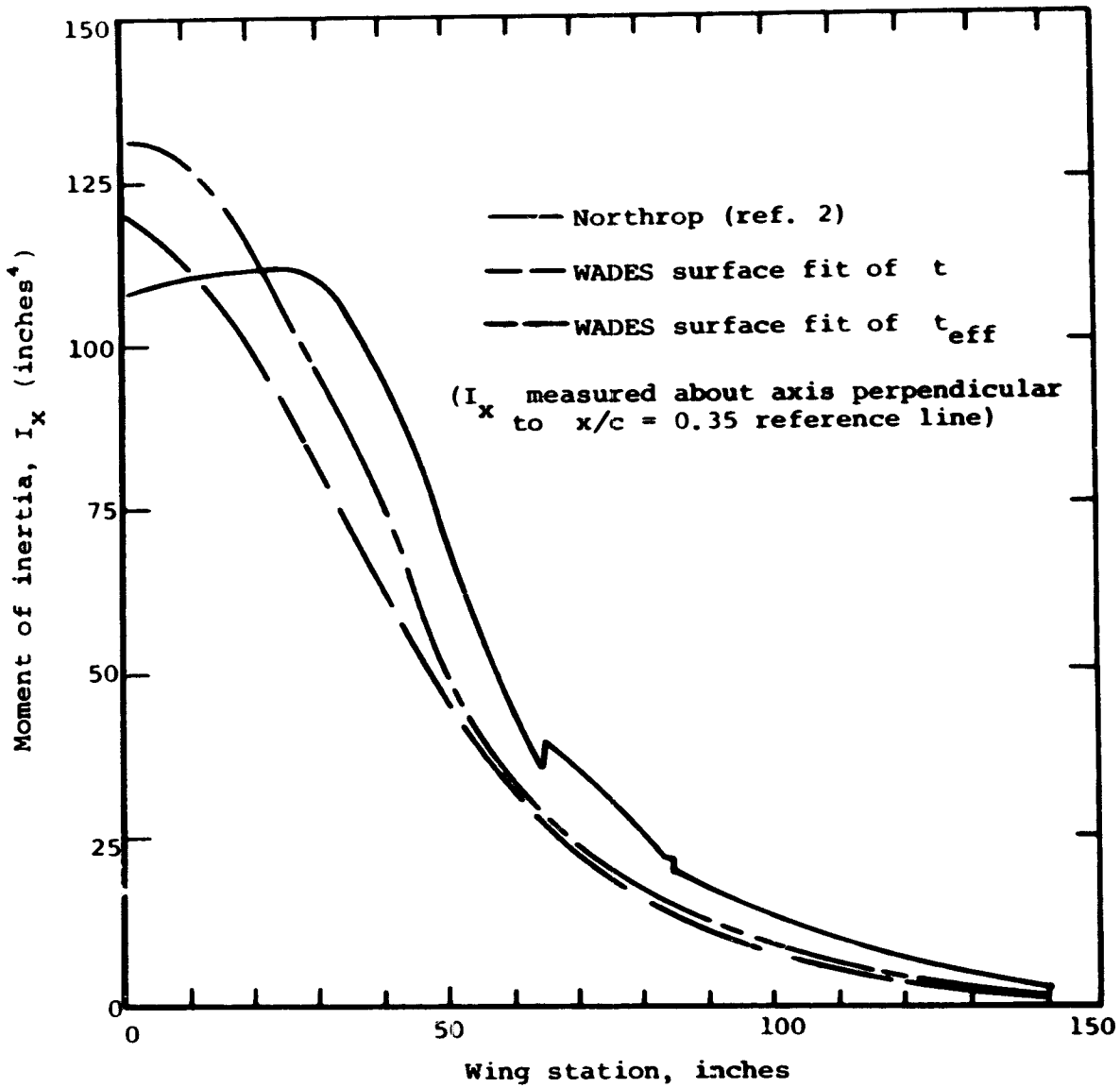

Figure 6.- F-5A/B moment of inertia, I_x, of structural material versus span.

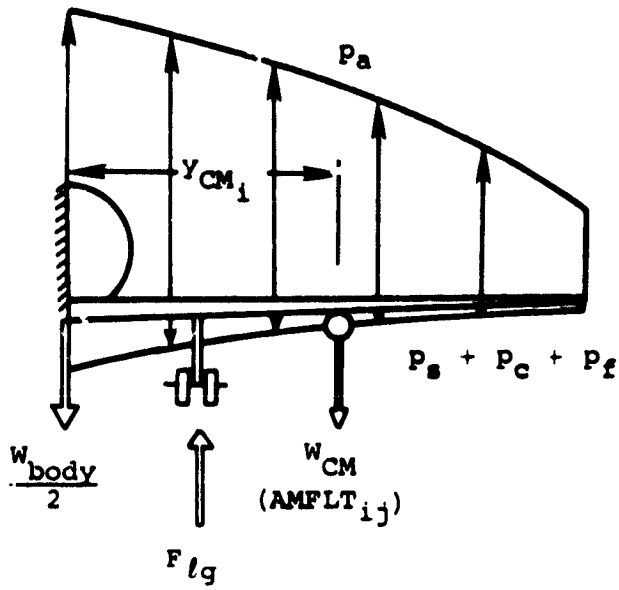

Figure 7.- Static balance of forces and pressures on wing.

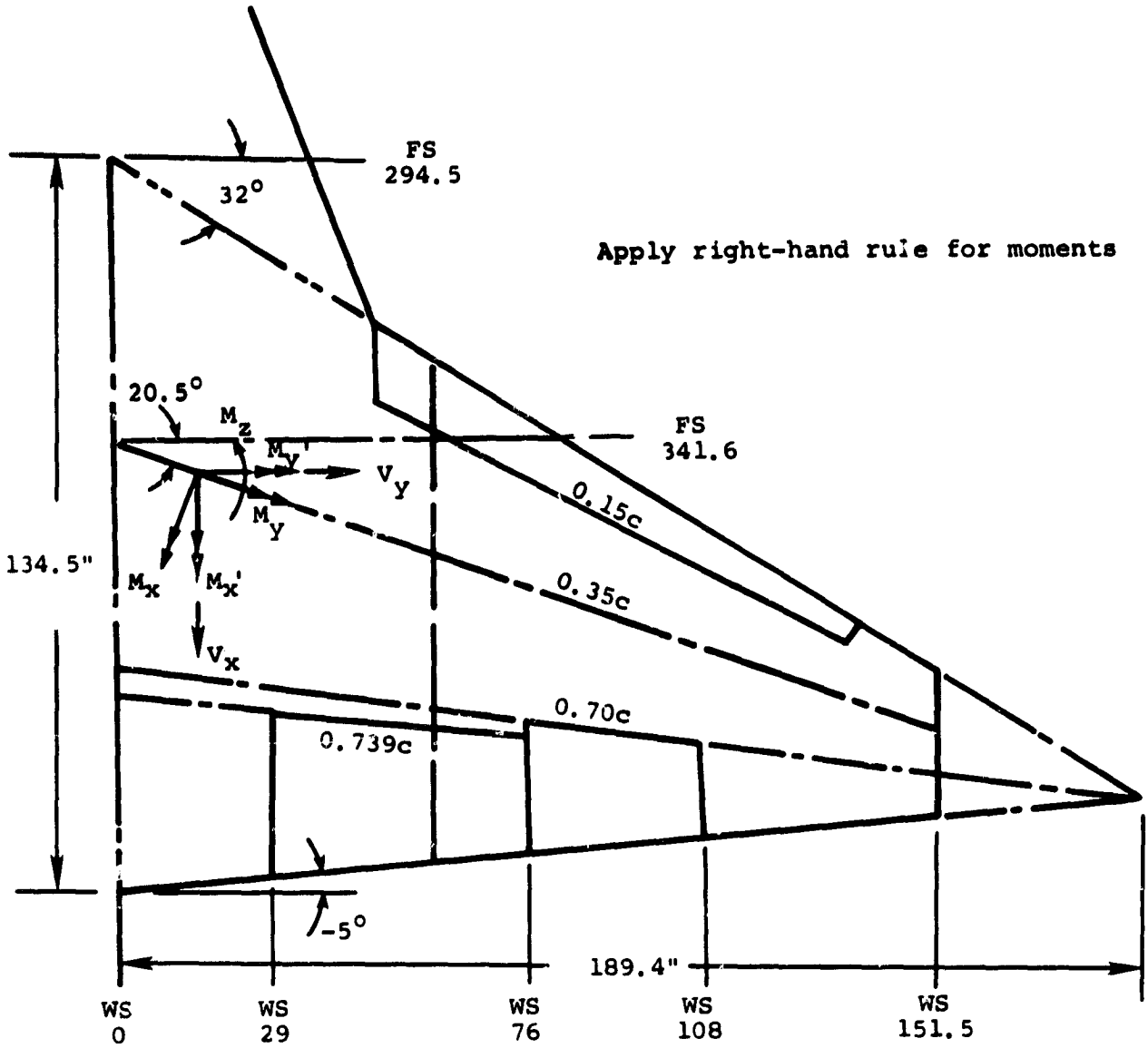

Figure 8.- F-5 wing geometry and force reference axes.

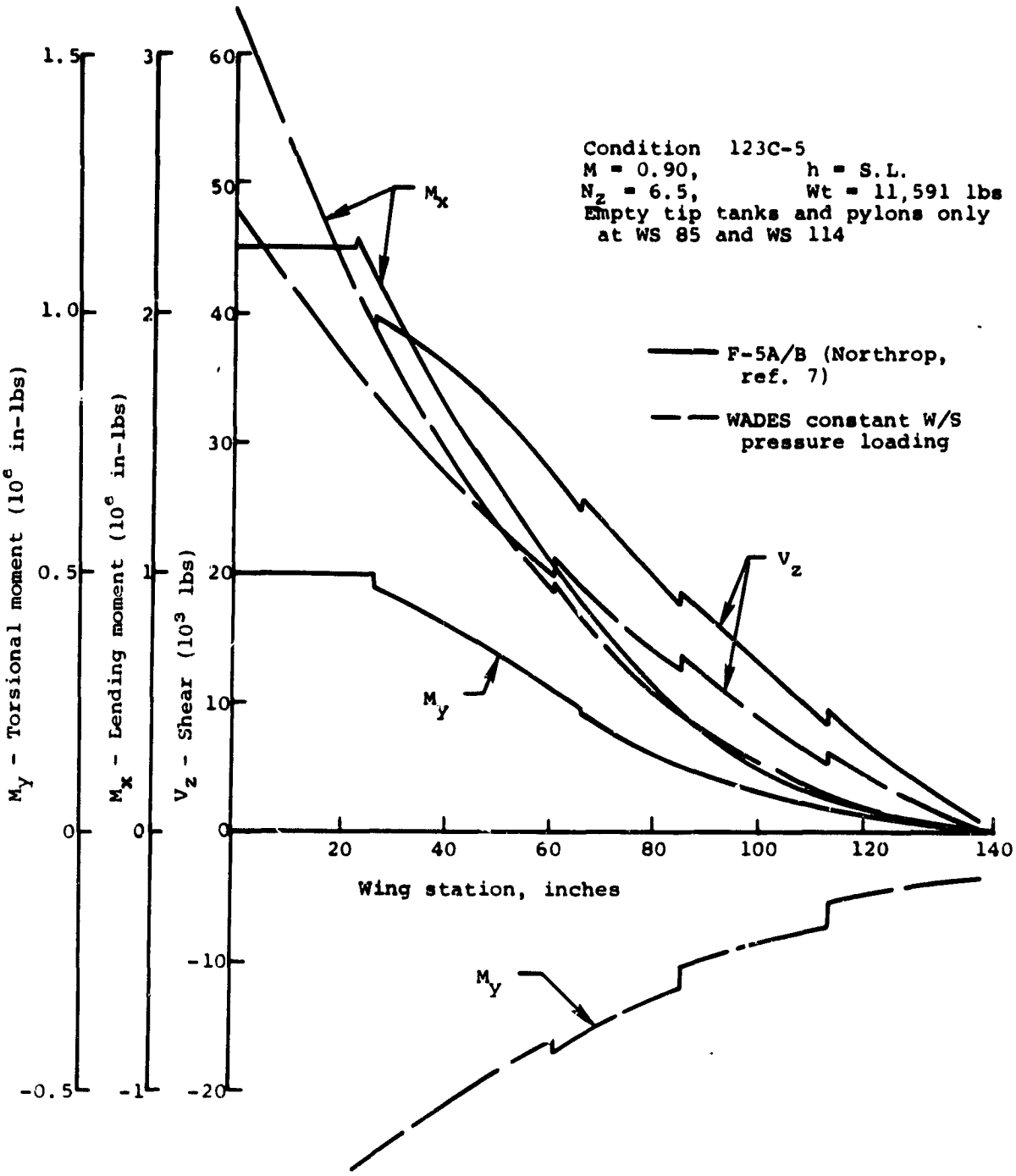

Figure 9.- Ultimate spanwise wing loads resolved to 35-percent chord axis.

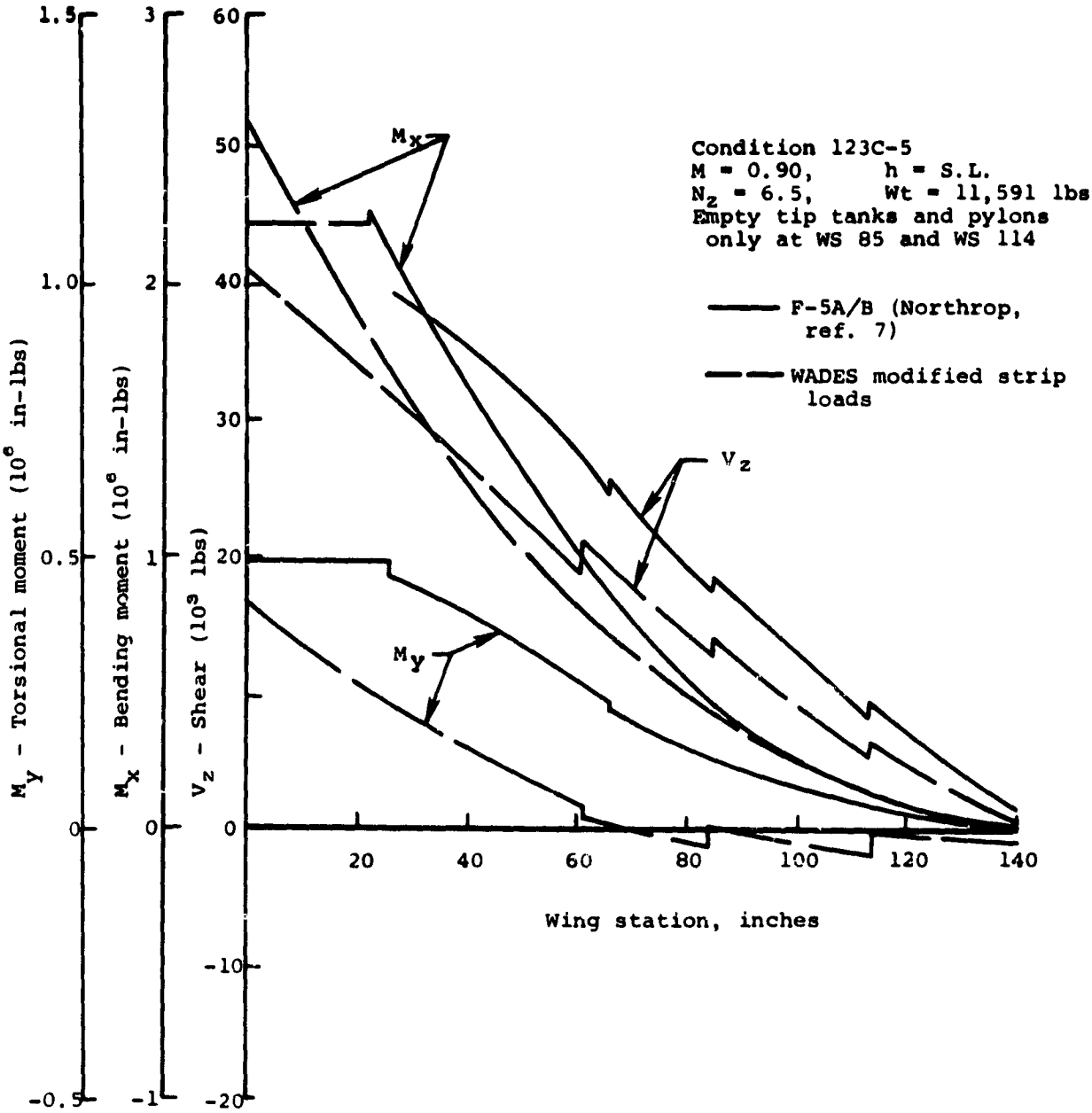

Figure 10.- Ultimate spanwise wing loads resolved to 35-percent chord axis.

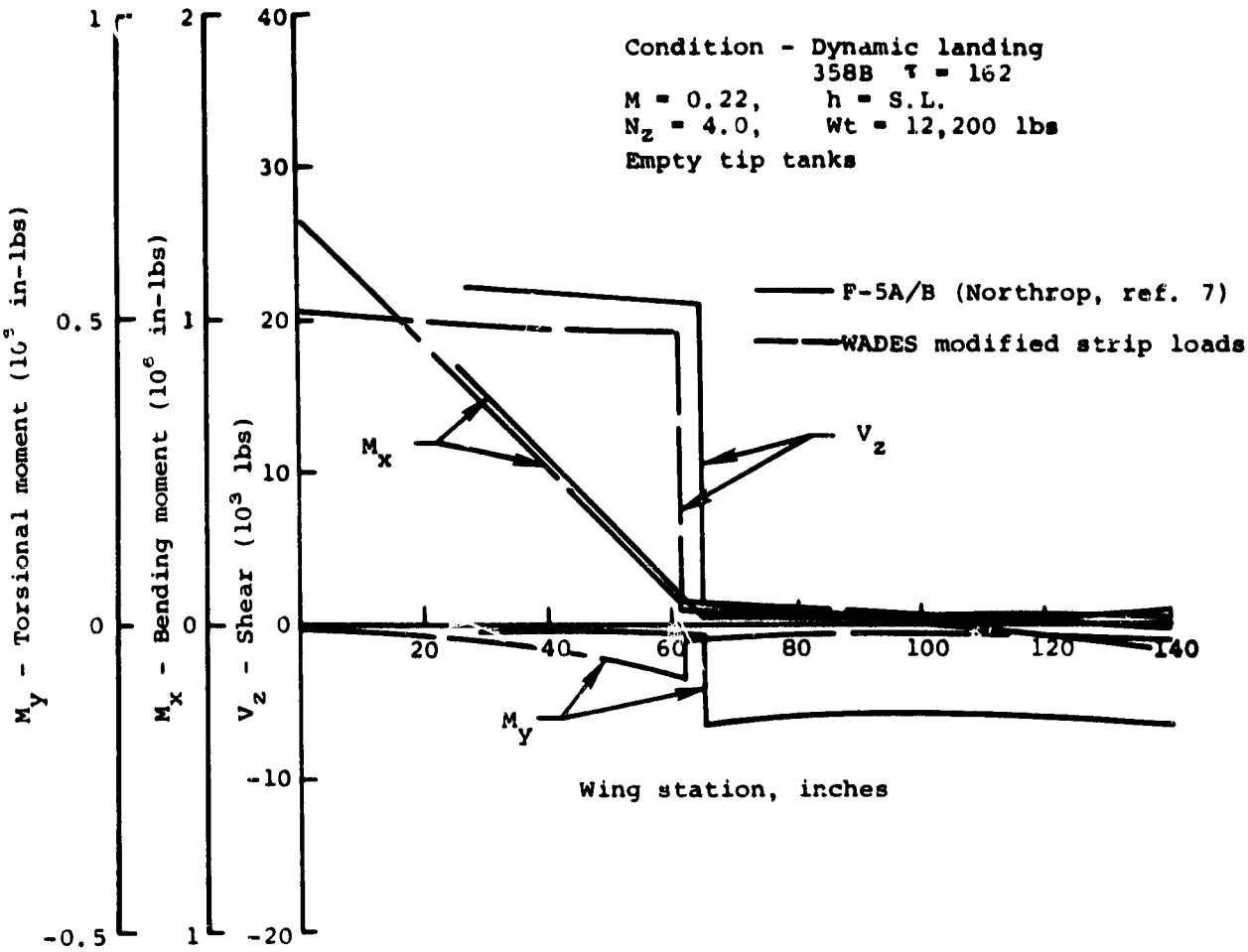

Figure 11.- Ultimate spanwise wing loads resolved to 35-percent chord axis.

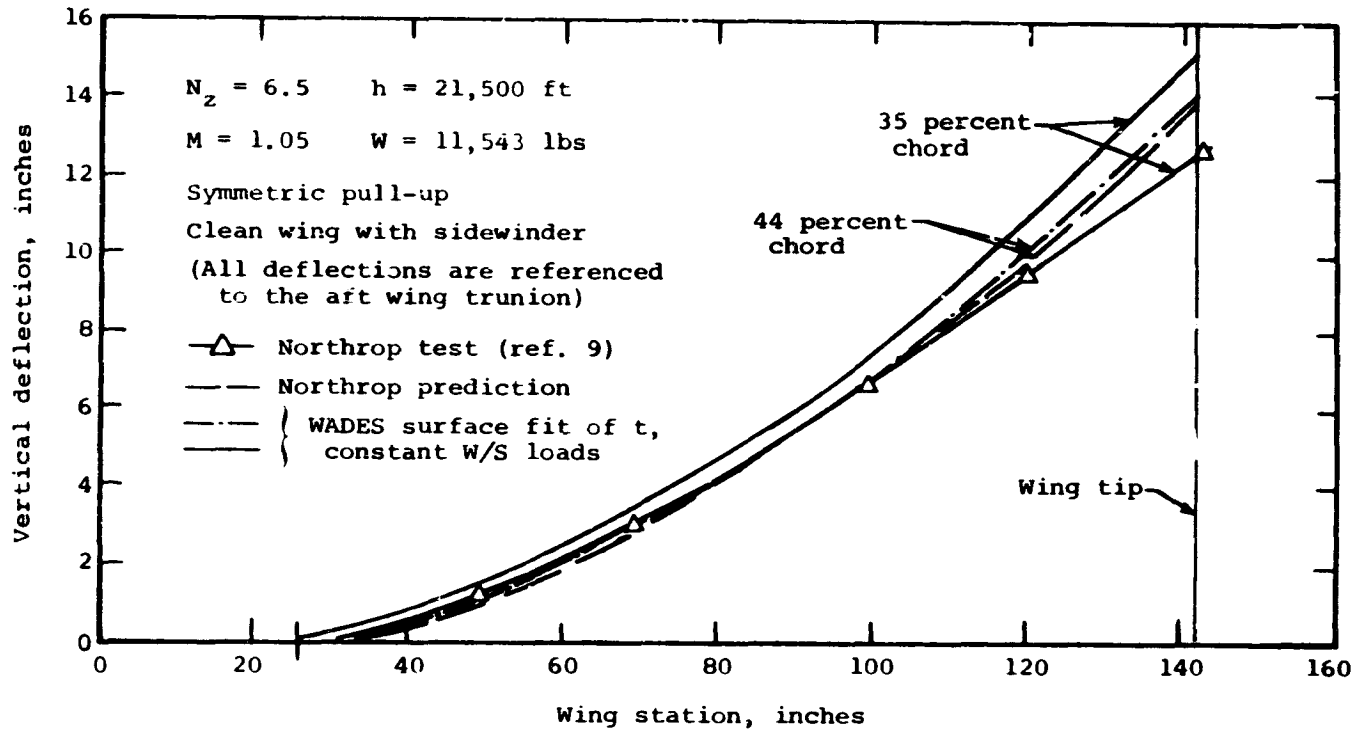

Figure 12.- F-5 wing vertical deflection for test limit load wing condition 104.

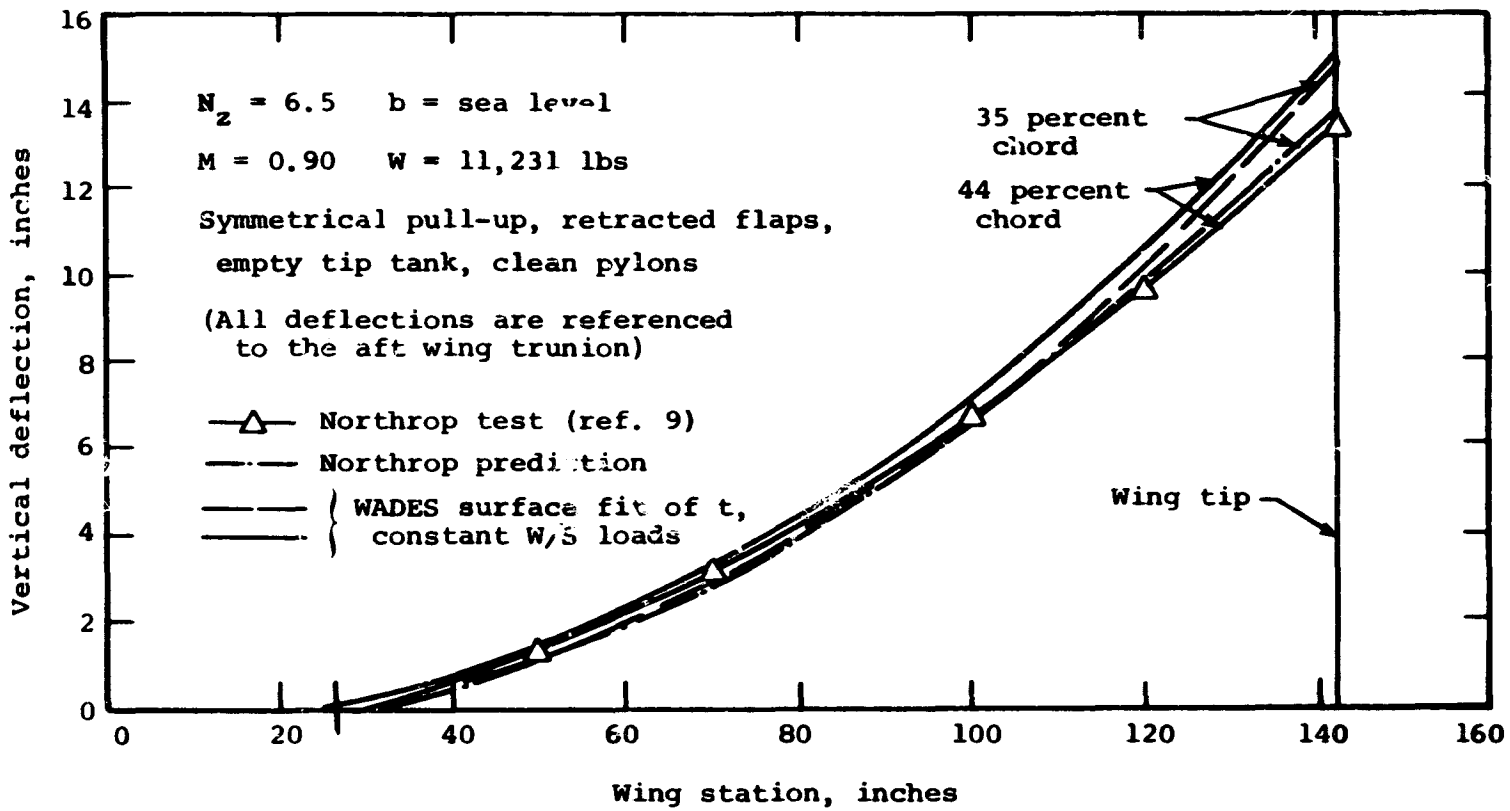

Figure 13.- F-5 wing vertical deflection for test limit load wing condition 123C-5.

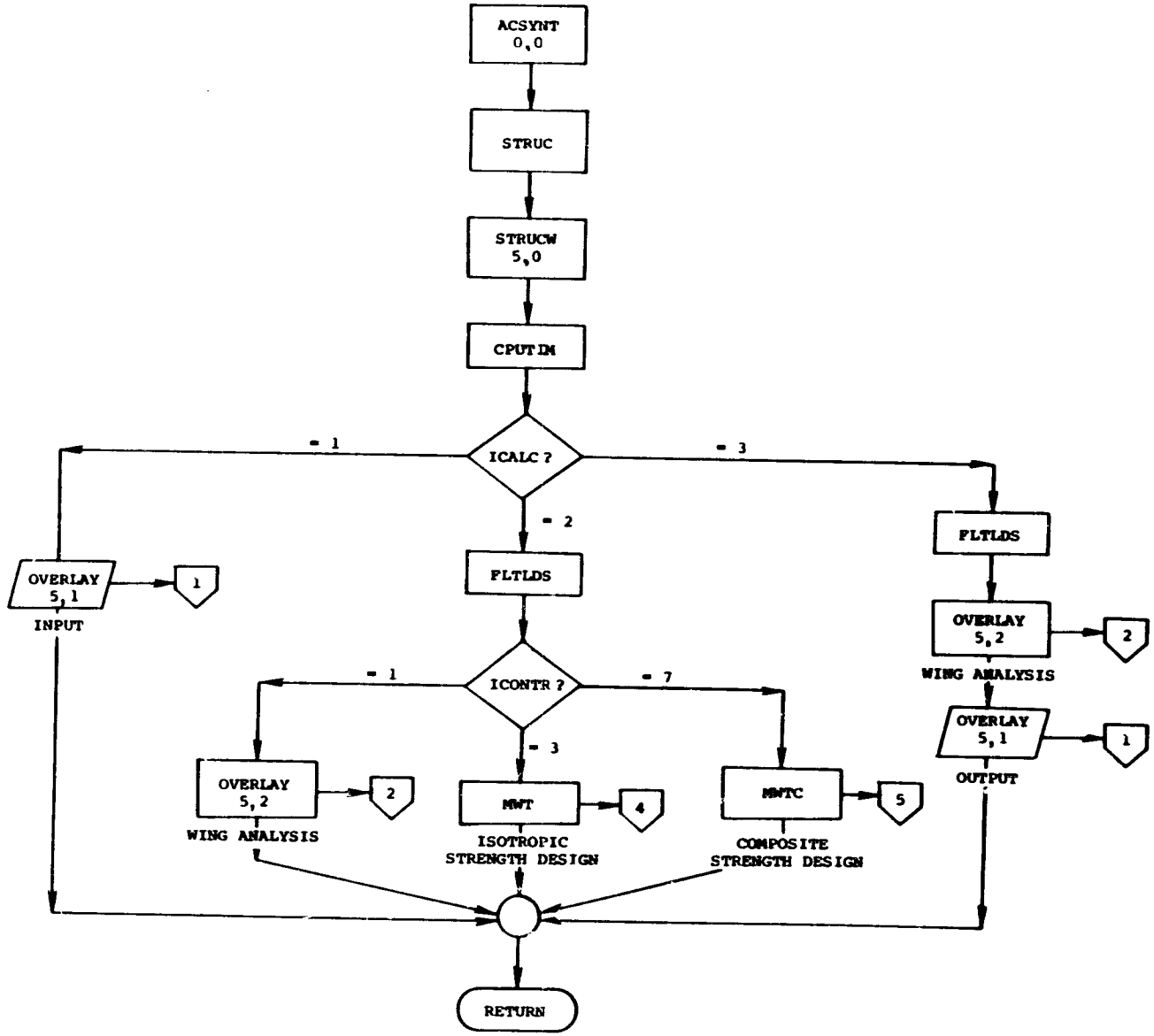

Figure 14.- WADES/ACSYNT subroutine flow chart.

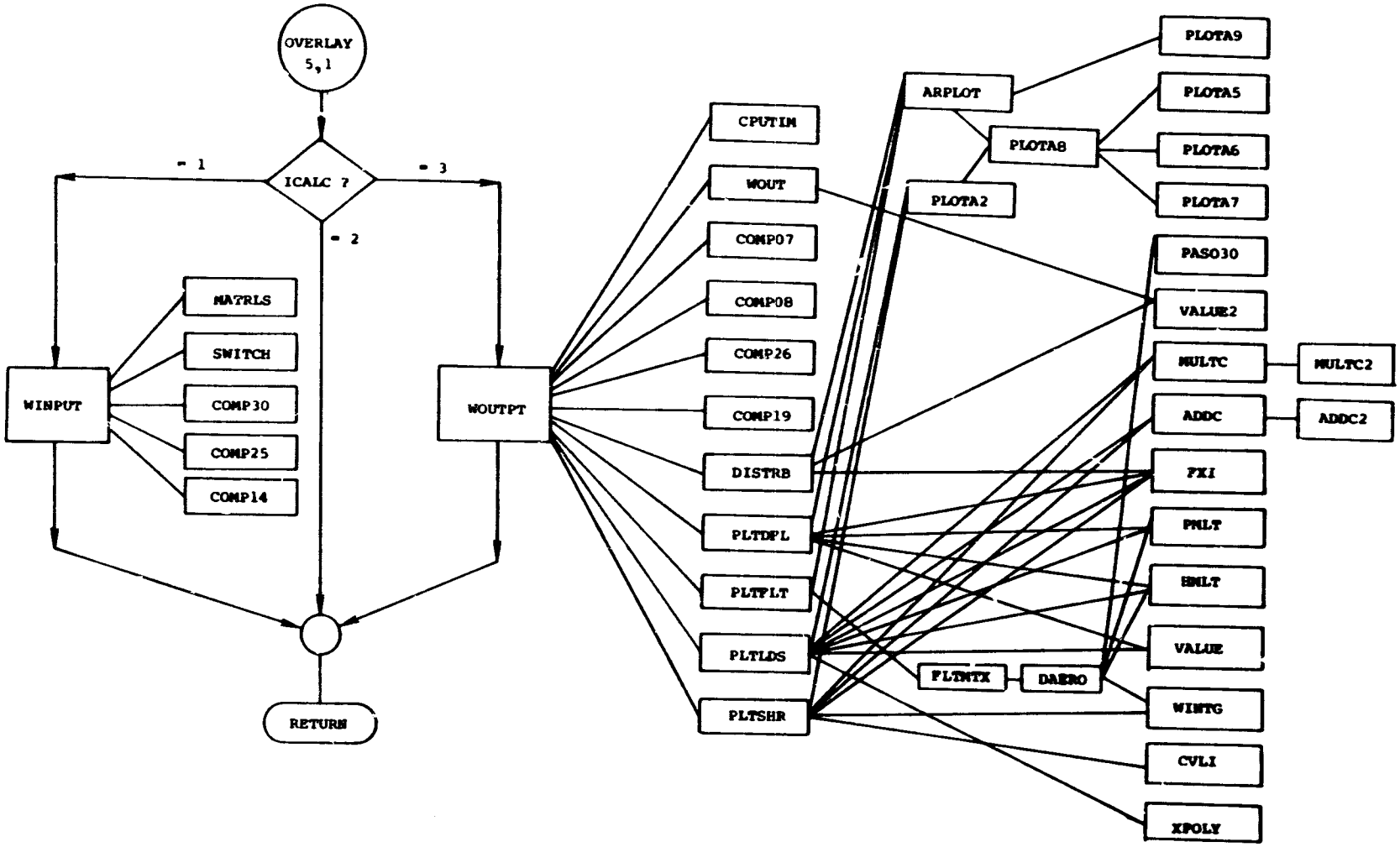

Figure 15.- Subroutine flow, OVERLAY 5,1.

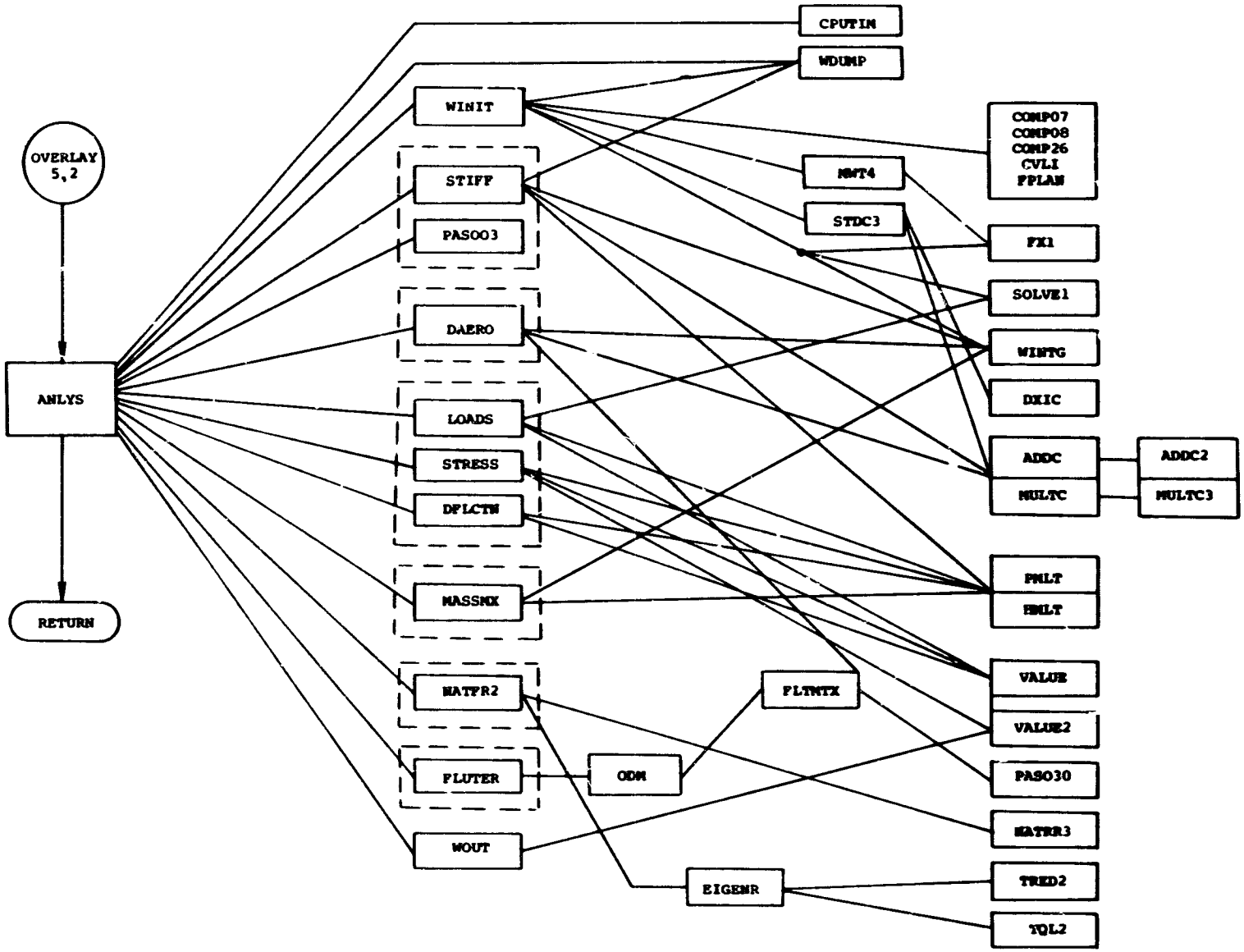

Figure 16.- Subroutine flow, OVERLAY 5,2.

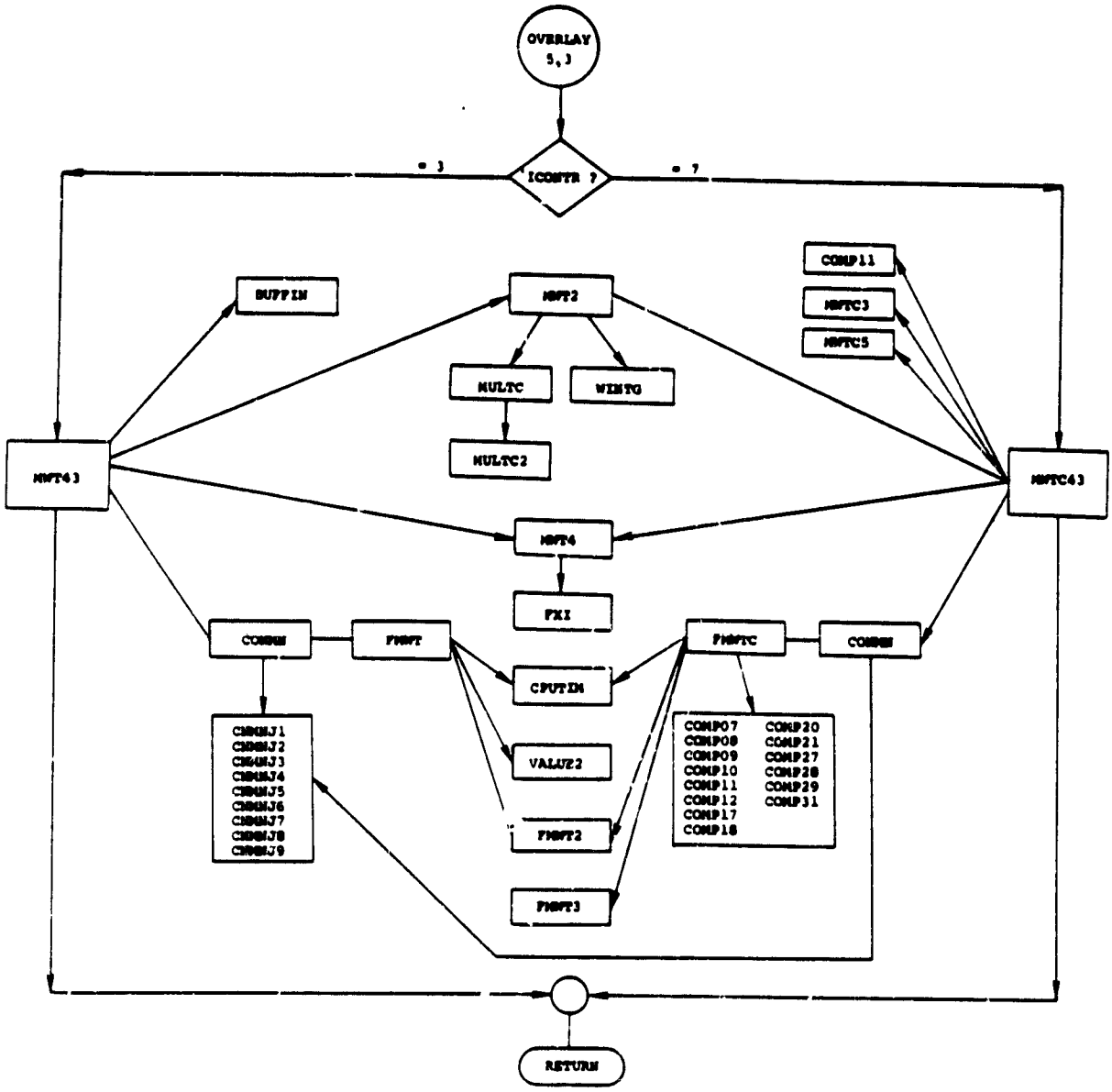

Figure 17.- Subroutine flow, OVERLAY 5,3.

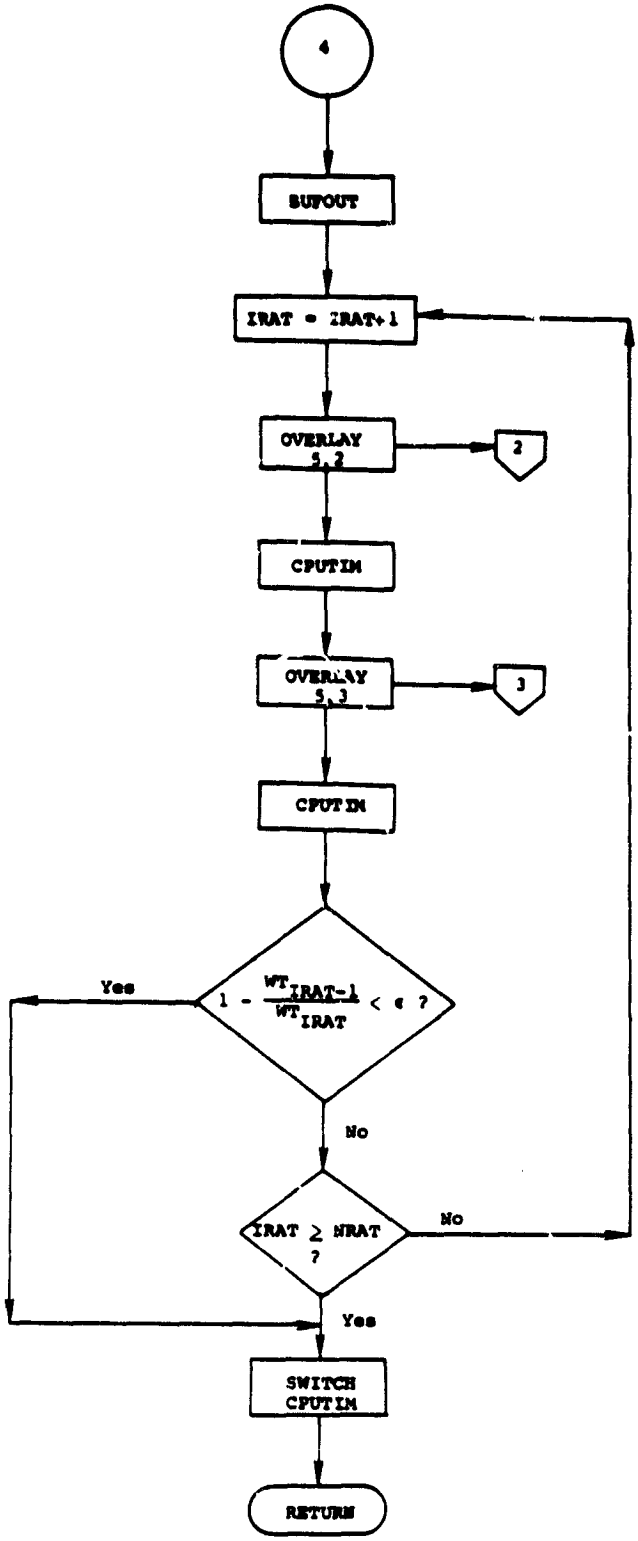

Figure 18.- Basic subroutine and OVERLAY flow for the strength design of isotropic wings, MWT, as called from OVERLAY 5,0 (ICONTR = 3).

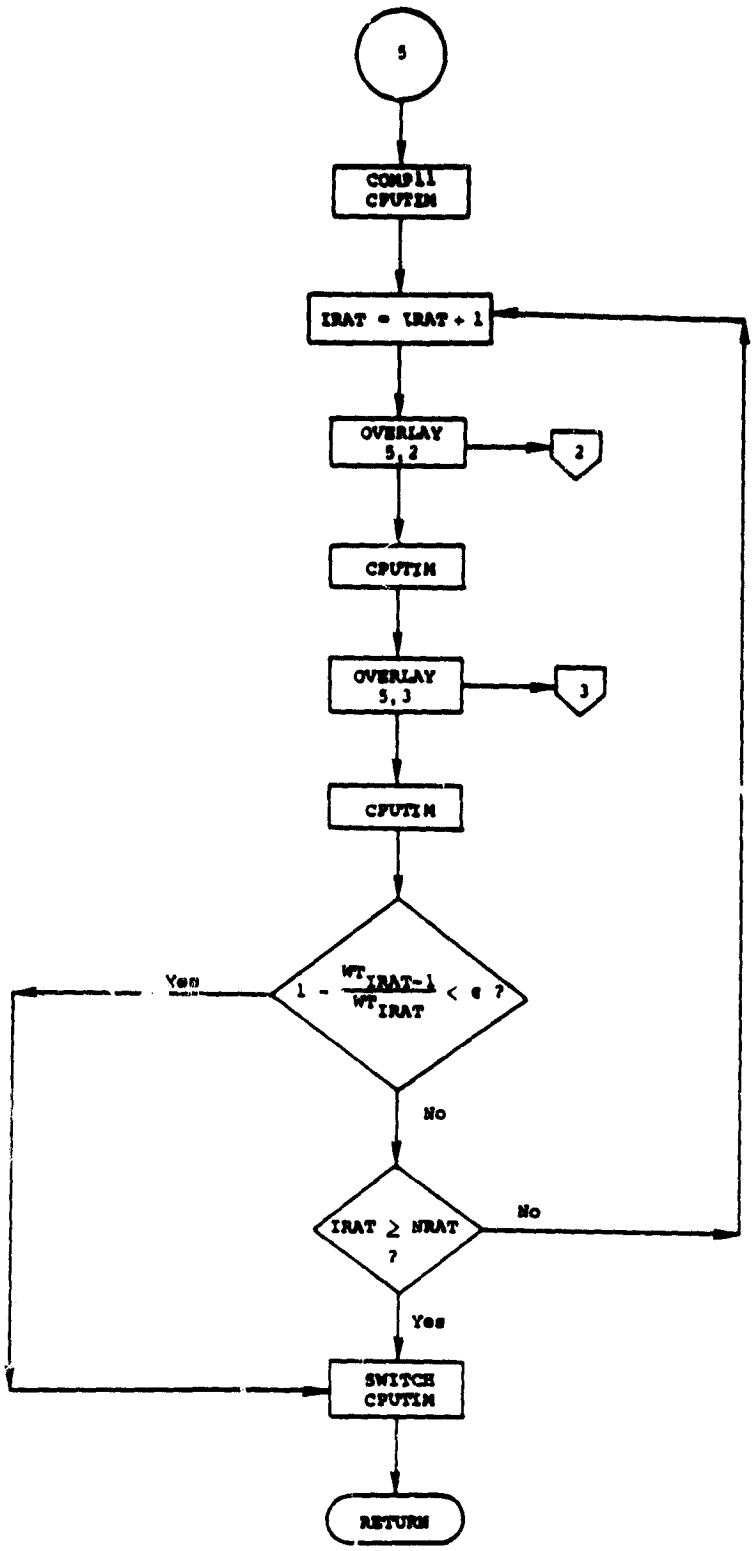

Figure 19.- Basic subroutine and OVERLAY flow for the strength design of composite wings, MWTC, as called from OVERLAY 5,0 (ICOMTR = 7).

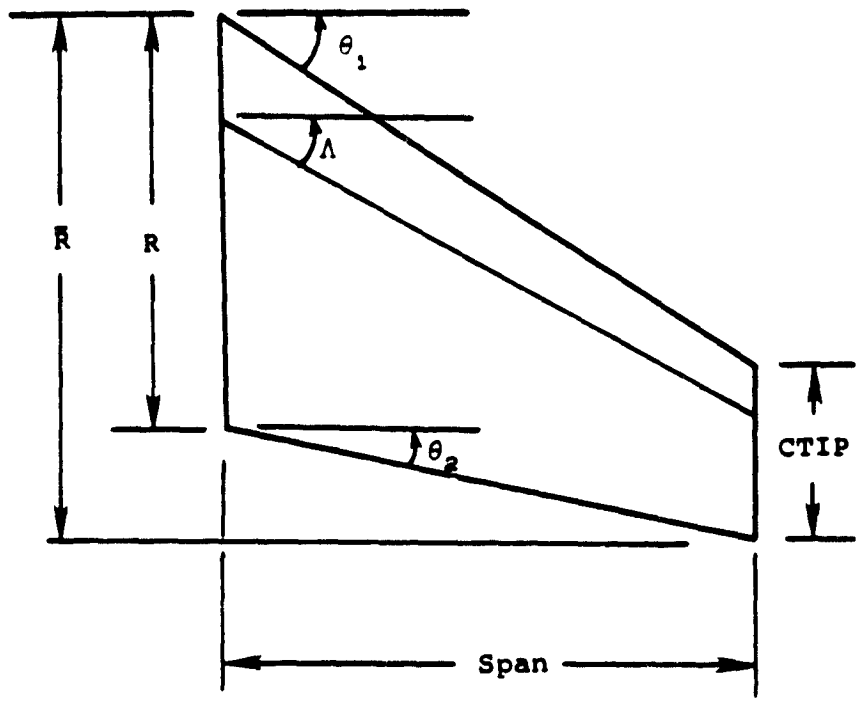

The equivalent values in terms of ACSNT program parameters are:

Description	WADES	ACSYNT
Root chord	R	ROOTWG*SPANWG
Tip chord	CTIP	TRWG*ROOTWG*SPANWG*SCALC(NCHORD)
Semispan	SPAN	SPANWG/2.
Reference sweep angle	Λ	Λ
Leading-edge angle	θ_1	ARCTAN[TAN Λ-EWING(NCHORD)*CTIP/SPAN +EWING(1)*R/SPAN]
Trailing-edge angle	θ_2	ARCTAN[TAN θ_1 +(CTIP-R)/SPAN]

Figure 20.- WADES/ACSYNT wing geometry.

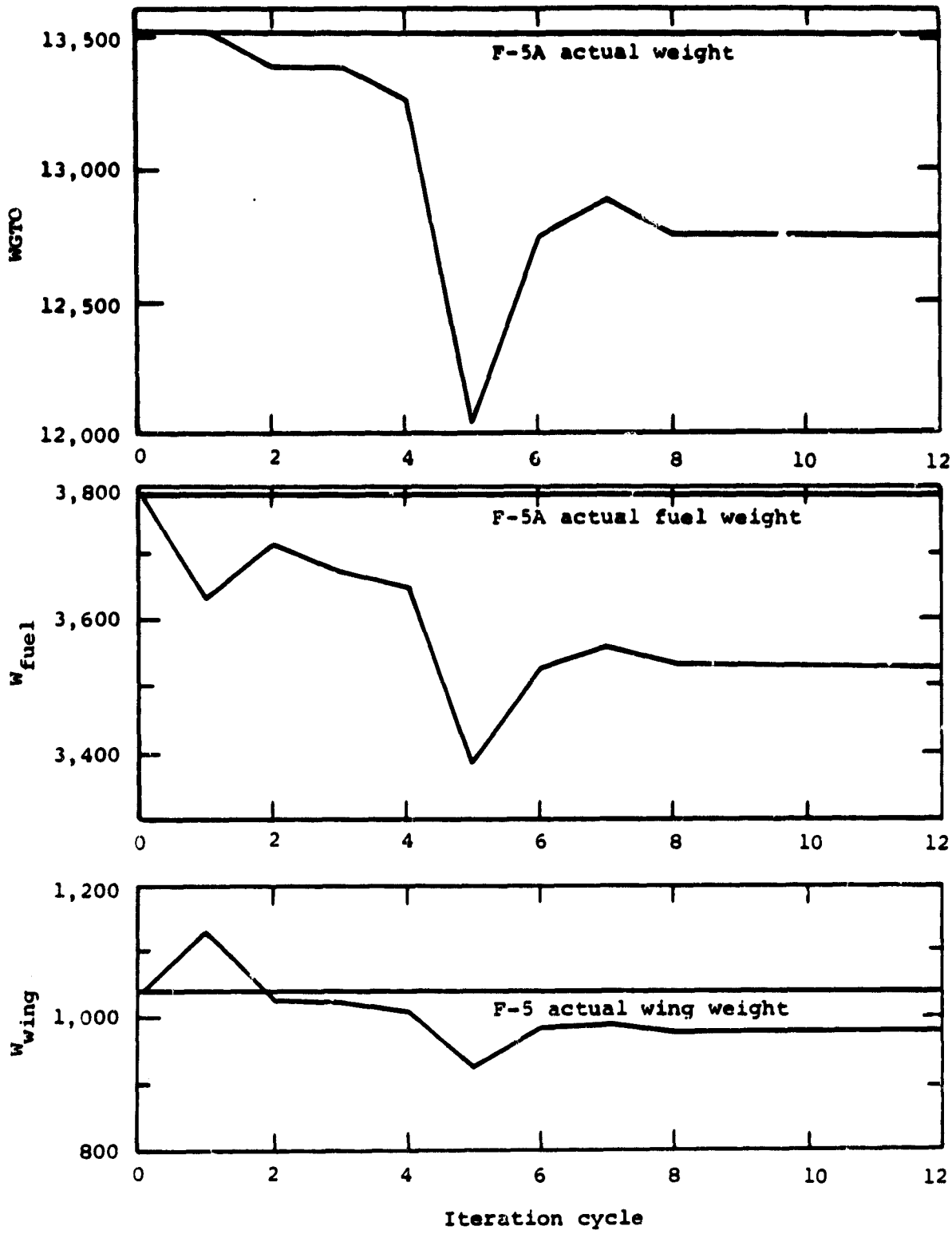

Figure 21.- WADES/ACSYNT convergence for F-5A vehicle synthesis.

STRUCTURES MODULE
******* WADES (WING ANALYSIS AND DESIGN) *******
******** VERSION DATED 15 SEPTEMBER 1975 *********

THE FOLLOWING IS A BRIEF DESCRIPTION OF THE INPUT NECESSARY FOR OPERATION OF THE WADES STRUCTURES MODULE WITHIN ACSYNT. THE DEFAULT VALUES ARE INDICATED IN PARENTHESES. WADES USES A SYSTEM OF CONSISTENT UNITS INTERNALLY, THAT IS, ALL UNITS USED THROUGHOUT THE PROGRAM ARE DEFINED AND MAINTAINED AS THOSE UNITS WHICH ARE SPECIFIED AT THE TIME OF INPUT. BECAUSE AVAILABLE MATERIAL PROPERTY VALUES ARE GENERALLY IN INCHES AND POUNDS THIS SYSTEM HAS BEEN ADAPTED FOR OPERATION WITH ACSYNT. ACCORDINGLY, THE PROGRAM INTERFACE ROUTINE CONVERTS ALL ACSYNT DIMENSIONAL VALUES TO INCHES FOR INTERNAL USE. THEREFORE, ALL FOLLOWING REFERENCES FOR LENGTH (L) AND WEIGHT (#) WILL USE INCHES AND POUNDS RESPECTIVELY.

TITLE	ALPHANUMERIC HEADING FOR OUTPUT	FORMAT (19A4)

BLOCK1	NAMELIST &OPTNS	
	DESCRIPTION	(DEFAULT)
&OPTNS		
IPRT	= INPUT PRINT CONTROL OPTION	(0)
	0 = DO NOT PRINT COPY OF INPUT DATA	
	1 = PRINT COPY OF INPUT	
IPRNT	= OUTPUT PRINT CONTROL	(0)
	0 = DO NOT PRINT OUTPUT	
	1 = PRINT FIRST AND LAST DESIGN OUTPUT	
	2 = PRINT OUTPUT ONLY DURING 1-D DESIGN STEP	
	3 = PRINT ALL OUTPUT DURING DESIGN	
JDUMP	= DEBUG LEVEL PRINT CONTROL	(0)
	0 = DO NOT PRINT OUTPUT	
	1 = PRINT MINIMAL WEIGHTS AND CURRENT DESIGN	
	2 = PRINT ABOVE AND SUMMARY OF FLIGHT RESPONSE	
	3 = PRINT ABOVE AND STRESSES	
	4 = PRINT ABOVE AND REDUCED VECTOR AND MATRIX OUTPUT	
	5 = PRINT ABOVE AND FULL STIFFNESS AND MASS MATRICES	
ICONTR	= ANALYSIS OR DESIGN ROUTINE OPTION	(3)
	CHOOSES ROUTINE WITH WHICH VEHICLE WILL BE ANALYZED OR DESIGNED UNDER ICALC=2.	
	1 = ANLYS - SINGLE ANALYSIS PASS	
	3 = MWT - ISOTROPIC STRENGTH DESIGN	
	4 = MWTSTF - ISOTROPIC STRENGTH & FLUTTER DESIGN	
	7 = MWTC - COMPOSITE STRENGTH DESIGN	
	8 = MWTCST - COMPOSITE STRENGTH & FLUTTER DESIGN	
	11 = WINPUT READ NEW INPUT DATA	

(a) Page 1.

Figure 22.- Inputs for WADES program.

```
IANAL   = ANALYSIS CONTROL OPTION VS FLIGHT CONDITION          (16*0,4*1)
          USER MUST INPUT ANALYSIS OPTIONS REQUIRED FOR
          EACH OF 'NOFC' FLIGHT CONDITIONS (NOFC<4):  LAST
          FIVE OPTIONS CONTROL SEPARATE ANALYSIS FUNCTIONS.
          FOR J=1,NOFC       EXECUTE FOLLOWING COMPUTATION
           (1,J)=1, STIFF  - COMPUTE STIFFNESS MATRIX
           (2,J)=1, LOADS  - COMPUTE WORK EQUIVALENT LOADS
                     GROSS LIFT=(WBODY+WTWING+WFUEL)*ALOAD
                =2, LOADS  - CONSTANT W/S LOADS
           (3,J)=1, MASSMX - CONSISTENT MASS MATRIX
           (4,J)=1, NATFR2 - NATURAL FREQUENCY ANALYSIS
           (5,J)=1, FLUTER - COMPUTE FLUTTER FREQ & MACH NO.
                 2, DIVERG - COMPUTE DIVERGENCE Q.
          FOR IANAL(I,4):
           (1,4)=0, USE ISOTROPIC MATERIAL PROPERTIES
                =1, USE MULTILAYER COMPOSITE PROPERTIES
                =2, USE MULTITHICKNESS FUNCTION COMPOSITE
           (2,4)=1, USE FINITE DIFFERENCE STIFFNESS MATRIX
                     (NOT AVAILABLE IN ACSYNT VERSION)
           (3,4)=1, DAERO  - RECOMPUTE AERODYNAMIC MATRICES
           (4,4)=1, STOC3  - RECOMPUTE T, D, & C.
           (5,4)=1, WINIT  - RECOMPUTE PLANFORM GEOMETRY
IPLOT   = PLOT CONTROL OPTION                                  (8*0)
           (I)=0, DO NOT PLOT APPROPRIATE FIGURE
           (1)=1, PLOT DEPTH FUNCTION DISTRIBUTION
           (2)=1, PLOT THICKNESS FUNCTION(S) DISTRIBUTION
           (3)=1, PLOT W-DISPLACEMENT VS FLT.CDN.
           (4)=1, PLOT FREQUENCY MODE SHAPES 1-3.
           (5)=1, PLOT FREQUENCY MODE SHAPES 4-6.
           (6)=1, PLOT FREQUENCY MODE SHAPES 7-9.
                   ONLY UP TO NEIG FREQUENCIES ARE PLOTTED
           (7)=1, PLOT FLUTTER DETERMINANT VS FREQ & MACH NO.
           (8)=1, PLOT PISTON THEORY SPANWISE SHEAR AND
                  MOMENT DIAGRAMS.
              =2, PLOT CONSTANT W/S DIAGRAMS.
              =3, PLOT STRIP THEORY DIAGRAMS.
NX      = NUMBER OF CHORDWISE DISPLACEMENT FUNCTIONS           (3)
           LIMITS: 1 TO 6 FOR 'PMLT'
NY      = NUMBER OF SPANWISE DISPLACEMENT FUNCTIONS            (5)
           LIMITS: 3 TO 8 FOR 'HMLT'
NRAT    = NUMBER OF STRESS RATIO ITERATIONS                    (6)
NPLYS   = NUMBER OF COMPOSITE PLYS                             (0)
IFOPT   = FLUTTER PLOT OPTION FOR X,Y SCALING                  (2)
IOPT    = WING PLOT OPTION FOR X,Y SCALING                     (3)
IFT     = NUMBER OF SPANWISE TERMS IN THICKNESS FUNCTION,      (5*3)
           FTT, VS MULTIPLE THICKNESS FUNCTION
JFT     = NUMBER OF CHORDWISE TERMS IN THICKNESS FUNCTION,     (5*3)
           FTT, VS MULTIPLE THICKNESS FUNCTION
IFD     = NUMBER OF SPANWISE TERMS IN FD & FC.                 (5)
           IF TCR>0, IFD=NUMBER TERMS TO TO USED IN CURVE
           FIT OF UPPER SURFACE OF WING.
JFD     = NUMBER OF CHORDWISE TERMS IN FC & FC.                (1)
           IF TCR>0, IFD IS INTERNALLY DEFINED.
           TOTAL NUMBER OF COFFICIENTS OF FD & FC MUST
```

(b) Page 2.

Figure 22.- Continued.

```
            BE LESS THAN 10.
NOVTH   = NUMBER OF PLY ANGLE DESIGN VARIABLES                (0)
            (USED ONLY WITH COMPOSITE ANALYSIS)
NXSIG   = NUMBER OF CHORDWISE STRESS LOCATIONS CHECKED        (4)
NYSIG   = NUMBER OF SPANWISE STRESS LOCATIONS CHECKED         (4)
NXGC    = NUMBER OF CHORDWISE MINIMUM GAGE CONSTRAINT         (5*5)
            LOCATIONS OF THICKNESS CHECKED DURING DESIGN
NYGC    = NUMBER OF SPANWISE MINIMUM GAGE CONSTRAINT          (5*5)
            LOCATIONS OF THICKNESS CHECKED DURING DESIGN
NOFC    = NUMBER OF FLIGHT CONDITIONS ANALYZED                (1)
NWINGS  = NUMBER OF WINGS                                     (2)
            THIS EFFECTS ONLY THE WEIGHT CALCULATIONS (IE.
            WING WEIGHTS ARE NWINGS*WT), ALL INPUT WEIGHTS
            (WBODY,WFUEL) ARE BASED ON THE PARTIAL VEHICLE
            WEIGHT INVOLVED.
NCM     = NUMBER OF CONCENTRATED MASSES ON WING               (0)
NCMFLT  = NUMBER OF CONCENTRATED MASSES THAT MAY BE VARIED    (0)
            DURING FLIGHT CONDITIONS
            (NCM+NCMFLT<11),(NCMFLT<5)
NEIG    = NUMBER OF EIGENVALUES TO BE COMPUTED                (3)
ITOPT   = COMPOSITE PLY TRANSFORMATION OPTION                 (0)
            0 = GENERAL TRANSFORMATION
            1 = VECTOR TRANSFORMATION
ITYPES  = MATERIAL TYPE OPTION OF WING SKIN                   (0)
            0 = INPUT MATERIAL PROPERTIES
            1 = USE ALUMINUM DEFAULT PROPERTIES
            2 = USE TITANIUM DEFAULT PROPERTIES
            3 = USE GRAPHITE/EPOXY DEFAULT PROPERTIES
                (SEE TABLE 1.1)
IBUFF   = ANALYSIS/DESIGN VARIABLE LINKING FOR MWT-MWTSTF     (30,...,49)
            DEFINES VARIABLE LOCATION IN COMMON/BWSAV/ TO
            BE TRANSFERED TO X-VECTOR IN /CNMN2J/ DURING
            DESIGN. DEFAULTS TO THICKNESS VARIABLES-FTT
&END
```

(c) Page 3.

Figure 22.- Continued.

```
-----------------------------------------------------------------------------
I BLOCK2  I  NAMELIST &NDESGN                                                I
-----------------------------------------------------------------------------
&NDESGN
  FTT     = INITIAL THICKNESS FUNCTION (L)                          (15*0.)
  TMIN    = MINIMUM GAGE THICKNESS (L)                              (0.)
          *** IF IANAL(1,4)=2, USE FOLLOWING REPRESENTATION ***
  FTL     = INITIAL MULTILAYERED THICKNESS FUNCTIONS (L)            5(10*0.)
  TM      = MINIMUM GAGE THICKNESS OF LAMINATES (L)                 (0.)
          ***                          *                         ***
  FD      = DEPTH FUNCTION OF DISTANCE OF UPPER SURFACE             (10*0.)
             FROM MIDPLANE.  IF TCR>0, FD IS COMPUTED
             FROM T/C(ROOT) AND T/C(TIP).   (L)
  FC      = CAMBER FUNCTION OF DISTANCE OF CAMBERED                 (10*0.)
             SURFACE: USED ONLY IN CALCULATION OF PISTON
             THEORY LOADING.   (L)
  TFR     = THICKNESS FRACTION OF EACH LAMINA WITH RESPECT          (1./NPLYS)
            TO TOTAL THICKNESS (TL(I)/TC) (USED ONLY FOR
            IANAL(1,4)=1).
  XTCR    = X/C LOCATION OF T/C(ROOT)                               (0.)
             IF XTCR=0.: USES XTCR=0.50  (BICONVEX WING)
             IF XTCR>0.: USES INPUT VALUE IN CURVE FIT OF
                         SURFACE
  XTCT    = X/C LOCATION OF T/C(TIP)                                (0.)
             IF XTCT=0.: USES XTCR FOR ENTIRE WING
             IF XTCT>0.: USES LINEAR TAPER FROM XTCR TO XTCT
  THET    = COMPOSITE PLY ANGLE ORIENTATIONS IF NOVTH=0,            (15*0)
             ONLY THE FIRST NPLYS LOCATIONS ARE USED.

            *** THE FOLLOWING VARIABLES MUST BE READ ****
            ** ONLY WHEN USING THE STAND ALONE VERSION **
  R       - RCOT CHORD (L)                                          (0.)
  SPAN    - SEMI-SPAN OF WING (L)                                   (0.)
  THET1   - SWEEP OF LEADING EDGE OF WING (DEG)                     (0.)
  THET2   - SWEEP OF TRAILING EDGE OF WING (DEG)                    (0.)
  TCR     - T/C OF WING AT ROOT                                     (0.)
  TCT     - T/C OF WING AT TIP                                      (0.)
             IF TCT=0, ASSUMES CONSTANT T/C VS SPAN
             IF TCT>0, ASSUMES LINEAR TAPER FROM ROOT TO TIP
&END
```

(d) Page 4.

Figure 22.- Continued.

```
-----------------------------------------------------------------------
I BLOCK3  I  NAMELIST &MATERL                                          I
-----------------------------------------------------------------------
&MATERL
  RHOS    = DENSITY OF SKIN MATERIAL ( /L**3)                    (0.)
  RHOC    = DENSITY OF CORE MATERIAL ( /L**3)                    (0.)
  RHOF    = DENSITY OF FUEL          (#/L**3)                    (0.)
  PVA     = FRACTION OF WING VOLUME AVAILABLE TO CARRY           (0.)
            FUEL IN.
  CWTS    = FRACTION OF NON-OPTIMUM WEIGHT FOR SKIN              (0.)
            (WTS = WTS*(1+CWTS)
  CWTC    = FRACTION OF NON-OPTIMUM WEIGHT FOR CORE              (0.)
            (WTC = WTC*(1+CWTC))
  GRAVTY  = GRAVITATIONAL CONSTANT IN USER UNITS (L/SEC**2)      (0.)
  XLE     = LOCATION OF LEADING EDGE OF STRUCTURE (X/C)          (0.)
  XTE     = LOCATION OF TRAILING EDGE OF STRUCTURE (X/C)         (0.)
  EXS     = CHORDWISE MODULUS OF SKIN          (#/L**2)          (0.)
  EYS     = SPANWISE MODULUS OF SKIN              "              (0.)
  GXYS    = INPLANE SHEAR MODULUS OF SKIN         "              (0.)
  GXZS    = TRANSVERSE SHEAR MODULUS OF SKIN      "              (0.)
  GYZS    = TRANSVERSE SHEAR MODULUS OF SKIN      "              (0.)
  XYNUS   = POISSON'S RATIO OF SKIN                              (0.)
  YXNUS   = POISSON'S RATIO OF SKIN                              (0.)
  EXC     = CHORDWISE MODULUS OF CORE          (#/L**2)          (0.)
  EYC     = SPANWISE MODULUS OF CORE              "              (0.)
  GXYC    = INPLANE SHEAR MODULUS OF CORE         "              (0.)
  GXZC    = TRANSVERSE SHEAR MODULUS OF CORE      "              (0.)
  GYZC    = TRANSVERSE SHEAR MODULUS OF CORE      "              (0.)
  XYNUC   = POISSON'S RATIO OF CORE                              (0.)
  YXNUC   = POISSON'S RATIO OF CORE                              (0.)
&END
```

(e) Page 5.

Figure 22.- Continued.

```
-----------------------------------------------------------------------
I BLOCK4  I  STRUCTURAL DESIGN FLIGHT CONDITIONS                      I
-----------------------------------------------------------------------
READ THE FOLLOWING STRUCTURAL DESIGN FLIGHT CONDITIONS
I=1,NOFC                                          FORMAT (5F10.5)

    SS(I)     XMO(I)      PO(I)  GAMMA(I)     ALT(I)
   ANZ(I)  WBODY(I)  WFUEL(I)      WS(I)

WHERE:
  SS      = SPEED OF SOUND AT FLIGHT CONDITION (L/SEC)
  XMO     = FREE STREAM MACH NUMBER
  PO      = STATIC PRESSURE (#/L**2)
  GAMMA   = RATIO OF SPECIFIC HEATS OF AIR
  ALT     = HEIGHT ABOVE SEA LEVEL (L)
  ANZ     = ULTIMATE STRUCTURAL LOAD FACTOR
  WBODY   = TOTAL BODY COMPONENT WEIGHTS (LBS) TO BE CARRIED BY NWINGS,
            EXCLUDING WING LOCATED WEIGHTS, AND FUEL TO BE LOCATED
            IN WINGS.
  WFUEL   = TOTAL WEIGHT OF FUEL TO BE LOCATED IN WING (#)
  WS      = W/S, WING LOADING (#/L**2)
            USED AS INPUT ONLY FOR ANAL(2,I)=2


-----------------------------------------------------------------------
I BLOCK5  I  CONCENTRATED MASS INFORMATION                            I
-----------------------------------------------------------------------
READ THE FOLLOWING CONCENTRATED MASS INFORMATION
I=1,NCM                                           FORMAT (3F10.5)

   XCM(I)     YCM(I)     WCM(I)

WHERE:
  XCM     = CHORDWISE LOCATION OF CONCENTRATED MASS (X/C)
  YCM     = SPANWISE LOCATION OF CONCENTRATED MASS (Y/(B/2))
  WCM     = WEIGHT OF MASS (#) TO BE LOCATED ON A SINGLE WING



READ THE FOLLOWING CONCENTRATED MASS INFORMATION THAT VARIES
WITH FLIGHT CONDITION
I=1,NCMFLT                                        FORMAT (5F10.5)

   XCM(I)     YCM(I)  AMFLT(I,J),J=1,NOFC

WHERE:
  XCM     = CHORDWISE LOCATION OF CONCENTRATED MASS (X/C)
  YCM     = SPANWISE LOCATION OF CONCENTRATED MASS (Y/(B/2))
  AMFLT   = WEIGHT OF MASS (#) VS FLIGHT CONDITION TO BE
            LOCATED ON A SINGLE WING.
```

(f) Page 6.

Figure 22.- Continued.

```
-----------------------------------------------------------------------
I BLOCK6  I  NAMELIST &CNSTR                                          I
-----------------------------------------------------------------------
&CNSTR
  SMAXT  = MAXIMUM TENSILE STRESS (ISOTROPIC) (#/L**2)          (0.)
  WMAX   = MAXIMUM ALLOWABLE DISPLACEMENT CONSTRAINT (L)        (0.)
  EIGMIN = MINIMUM ALLOWABLE NATURAL FREQUENCY (CPS)            (0.)
  FFMIN  = MINIMUM ALLOWABLE FLUTTER FREQUENCY (CPS)            (0.)
  FMMIN  = MINIMUM ALLOWABLE FLUTTER MACH NO.                   (0.)
  QFMIN  = MINIMUM ALLOWABLE FLUTTER DYNAMIC PRESS  (#/L**2)    (0.)
  XMAX   = MAXIMUM CHORDWISE SCALE VALUE OF WING PLOT (L)
  XMIN   = MINIMUM CHORDWISE SCALE VALUE OF WING PLOT (L)       (0.)
  YMAX   = MAXIMUM SPANWISE SCALE VALUE OF WING PLOT  (L)
  YMIN   = MINIMUM SPANWISE SCALE VALUE OF WING PLOT  (L)       (0.)
           FOR TRUE SCALE USE (XMAX-XMIN)/(YMAX-YMIN) = 1.5
  XMAXFM = MAXIMUM MACH NO. OF FLUTTER DETERMINATE PLOT         (6.)
  XMINFM = MINIMUM MACH NO. OF FLUTTER DETERMINATE PLOT         (1.)
  YMAXFF = MAXIMUM FREQ. OF FLUTTER DETERMINATE PLOT (CPS)      (6.)
  YMINFF = MINIMUM FREQ. OF FLUTTER DETERMINATE PLOT (CPS)      (1.)
  EPSF   = VARIOUS CONVERGENCE TOLERANCES
           1-3 = FLUTTER CONVERGENCE TOLERENCES                 (3*0.001)
           4   = SCALE FACTOR FOR FLUTTER DETERMINANT           (0.5)
           5   = WEIGHT CONVERGENCE OF MWT AND MWTC             (0.0001)
           6-8 = NOT CURRENTLY USED                             (3*0.)
  FF     = ON INPUT: INITIAL GUESS TO FLUTTER FREQUENCY (CPS)
  FM     = ON INPUT: INITIAL GUESS TO FLUTTER MACH NUMBER
&END

-----------------------------------------------------------------------
I BLOCK7  I  NAMELIST &CNMN                (READ BY COMP30)           I
-----------------------------------------------------------------------
&CNMN
  IPRINT = PRINT CONTROL OPTION (NO=0,YES>0)                    (0)
  NDV    = NUMBER OF DESIGN VARIABLES
  ITMAX  = MAXIMUM NUMBER OF ITERATIONS                         (10)
  NSIDE  = SIDE CONSTRAINT OPTION                               (0)
  NSCAL  = SCALING CONTROL PARAMETER                            (0)
  NFDG   = GRADIENT CALCULATION CONTROL                         (0)
  FDCH   = RELATIVE FINITE DIFFERENCE STEP                      (0.01)
  FDCHM  = MINIMUM RELATIVE FINITE DIFFERENCE STEP              (0.01)
  CT     = CONSTRAINT THICKNESS PARAMETER                       (0.10)
  CTMIN  = MINIMUM ABSOLUTE VALUE OF CT                         (0.004)
  CTL    = LINEAR-CONSTRAINT THICKNESS PARAMETER                (0.01)
  CTLMIN = MINIMUM ABSOLUTE VALUE OF CTL                        (0.001)
  THETA  = PUSH-OFF FACTOR                                      (1.00)
  PHI    = PARTICIPATION COEFFICIENT                            (5.00)
  DELFUN = RELATIVE CONVERGENCE OF OBJECTIVE                    (0.001)
  DABFUN = ABSOLUTE CONVERGENCE OF OBJECTIVE                    (0.001)
  ITRM   = CONSECUTIVE ITERATIONS OF REQUIRED CONVERGENCE       (3)
  VLB    = VECTOR OF LOWER BOUNDS ON 'X'                        (30*0.)
  VUB    = VECTOR OF UPPER BOUNDS ON 'X'                        (30*0.)
           VUB & VLB ARE USED ONLY FOR NSIDE>0
  SCAL   = VECTOR OF SCALING VALUES FOR 'X' (X=X/SCAL)          (30*0.)
           USED ONLY FOR NSCAL<0
&END
```

(g) Page 7.

Figure 22.- Continued.

```
-----------------------------------------------------------------------
I BLOCK8  I  COMPOSITE PLY MATERIAL PROPERTIES   (READ BY COMP25)     I
-----------------------------------------------------------------------
READ THE FOLLOWING COMPOSITE MATERIAL PROPERTIES FOR
IANAL(1,4) > 0 AND ITYPES=0,                    FORMAT (5F10.3)
READ MODULI AND POISSON'S RATIOS

     EL11       EL22      NUL12      NUL21      GL12
     GL13       GL23

READ LAMINA DENSITY, PLY THICKNESS, VOLUME RATIO, FIBER CONTENT

     RHOL       TPLY        KV         KF

READ LIMIT STRESS/STRAIN CONSTANTS

    SL11T      SL11C      SL22T      SL22C      SL12S
    SL23S     PHIDEL

  WHERE  THE  VARIABLE  ENDING  IN  'T'  OR  'C'  DENOTES  TENSION  OR
COMPRESSION IN  THE APPROPRIATE COMPONENT  DIRECTIONS AND  'S' INDICATES
SHEAR.  FOR  PURPOSES  OF  DESIGN SL13S=SL23S.   PHIDEL  IS  THE  STRAIN
ALLOWABLE FOR DELAMINATION, WHICH IS NOT USED IN THIS PROGRAM VERSION.


-----------------------------------------------------------------------
I BLOCK9  I  PLY ORIENTATION DATA              (READ BY COMP14)       I
-----------------------------------------------------------------------
IF NDVTH=0, SKIP INPUT PLY ORIENTATIONS IN NAMELIST &NDESGN
IF NDVTH>0, READ COMPOSITE ANALYSIS/DESIGN VARIABLE
TRANSFORMATION ACCORDING TO ITOPT.  TRANSFORMATION LINKS
PLY ORIENTATION AND THE DESIGN VARIABLES ACCORDING TO:
 ITOPT=0,  THET(I) = SUM T(I,J)*X(J) + THET(I+NPLYS)
 ITOPT=1,  THET(I) = T(I)*X(I) + THET(I+NPLYS)


 FOR ITOPT=0,
            READ J=1,NDVTH
            T(I,J),I=1,NPLYS

 FOR ITOPT=1,
            READ T(I),I=1,NPLYS

 READ CONSTANT PORTION OF ANALYSIS VARIABLES

            THET(I+NPLYS),I=1,NPLYS

 READ INITIAL DESIGN FOR THET

            THET(I),I=1,NDVTH
```

(h) Page 8.

Figure 22.- Continued.

SAMPLE DATA FOR F-5A INPUT TO ACSYNT

```
 F-5A/B  ACSYNT-WADES WING WEIGHT CORRELATION
 $OPTNS IPRT=1,IANAL=1,1,0,0,0, 1,1,0,0,0, 5*0, 0,4*1,
 IPLOT=1,1,1,0,0,0,0,2, IPRNT=1,IDUMP=3,ICONTR=3,
 IFT=4,4*0,JFT=4,4*0,IFD=5,NCM=0,NCMFLT=2,NOFC=2,ITYPES=1, $END
 $NDESGN FTT=0.4,0.,0.,0.,0.4,10*0., TMIN=0.02, $END
 $MATERL RHOF=0.056,PVA=0.0,GRAVT=386.307,
 XLE=0.15,XTE=0.55,CWTS=0.0,CWTC=0.0,XYNUC=0.0,YXNUC=0.0,
 EXC=429000.,EYC=778000.,GXYC=0.,GXZC=39400.,GYZC=118600.,
 RHOC=0.00848, $END
12360.0    1.05       6.33       1.4        21500.
9.8        9597.0     0.0        0.0
13392.0    0.22       14.7       1.4        0.0
4.0        10432.0    0.0        0.0
0.55       0.40       248.0      -4327.0                    LANDING GEAR
0.10       1.0        204.0      115.0                      AIM-9B/TIP TANK
 $CNSTR TGAGE=0.02,WMAX=30.,EIGMIN=3.0,FFMIN=3.0,FMMIN=2.50,QFMIN=23.2,
 FM=3*3.0,FF=3*12.0, XMAXFM=6.0,XMINFM=1.0,YMAXFF=16.0,YMINFF=6.0, $END
 $CNMN IPRINT=0,NSCAL=0,ITMAX=30,NFDG=0,NSIDE=0, $END
```

(i) Page 9.

Figure 22.- Concluded.

ORIGINAL PAGE IS
OF POOR QUALITY

```
  F-5A/B WING WEIGHT CORRELATION - DEFAULT STARTING FTT
 $OPTNS IPRT=1,IPRNT=1,JDUMP=4,ICONTR=3,
 IANAL=1,1,1,1,0, 1,1,0,0,0, 1,1,0,0,0, 0,4*1,
 IPLOT=0,1,1,0,0,0,0,2,
 NPLYS=0,IFD=5,NCM=0,NCMFLT=4,NUFC=3,ITYPES=1, $END
 $NODESGN R=13.5,SPAN=151.5,THET1=32.0,THET2=-5.0,TCR=0.048,
 FTT=0.6,0.0,0.0,0.0,0.8,10*0.0,TMIN=0.02, $END
 $MATERL RHOC=0.000386,RHOF=0.056,PVA=0.0,GRAVTY=386.307,XLE=0.15,XTE=0.55,
 EXC=429000.,EYC=775000.,GXYC=0.0,GXZC=39400.,GYZC=118600., RHOC=0.00848,
 XYNUC=0.0,YXNUC=0.0, $END
12360.0     1.05        4.33        1.4         21500.
9.8         9597.        0.0        0.0
13392.0     0.22        14.7        1.4         0.0
4.0         10432.0      0.0        1.0
13392.0     0.90        14.7        1.4         0.0
9.8         9359.       0.0         0.0
0.55        0.40        248.        -4327.      248.
0.10        1.0         204.0       115.0       115.0
0.3         0.56        0.0         0.0         112.75
0.3         0.75        0.0         0.0         119.0
 $CNSTR TGAGE=0.02,WMAX=100.,
 FIGMIN=3.0,FFMIN=3.0,FMMIN=2.50,WFMIN=23.2, FM=3*3.00,FF=3*12.0,
 XMAXFM=6.00,XMINFM=1.0,YMAXFF=16.0,YMINFF=6.0, $END
 $CNMN IPRINT=0,ITMAX=30, $END
```

Figure 23.- Sample of input card to WADES program.

```
*****************************************************************************
*          W A D E S TRAPEZOIDAL WING INITIAL INPUT - VERSION 1/1/75        *
*   F-5A/B WING WEIGHT CORRELATION - DEFAULT STARTING FTT                   *
*****************************************************************************
```

INPUT CONTROL PARAMETERS **BLOCK 1**

```
ANALYSIS CONTROL OPTIONS (IANAL)(NO=0,YES>0)
  STIFF  LOADS  MASSMA NATFRQ FLUTER
    1      1      1      1      0
    1      1      0      0      0
    1      1      0      0      0
  COMPOS  ---   DAEFO  STDC   GEOM
    0      1      1      1      1

PLOT CONTROL OPTIONS (IPLOT)(NO=0,YES>0)
  DEPTH  THICK  DFLCTN FREQ1  FREQ2
    0      1      1      0      0
  FREQ3  FLT DET LOADS
    0      0      2

     DESCRIPTION                (DEFAULT) (VAR)   VALUE
NUMBER OF CHORDWISE POLYNOMIALS    (3)     (NX)    3
NUMBER OF SPANWISE POLYNOMIALS     (5)     (NY)    5
NUMBER OF STRESS RATIO ITERATIONS (6)   (NRAT)    6
NUMBER OF COMPOSITE PLYS                (NPLYS)    0
X,Y SCALING OPTION-WING PLANFORM   (3)   (IOPT)    3
X,Y SCALING OPTION-FLUTTER DET.    (2)  (IFOPT)    2
NUMBER OF ETA TERMS - FTL(I)       (3)    (IFT)    3    0    0    0    0
NUMBER OF XI TERMS -  FTL(I)       (3)    (JFT)    3    0    0    0    0
TOTAL NUMBER OF TERMS - FTL(I)            (NFT)    6    0    0    0    0
NUMBER OF ETA TERMS - FD,FC               (IFD)    5
NUMBER OF XI TERMS - FD,FC                (JFD)    1
TOTAL NUMBER OF TERMS - FD,FC             (NFD)    5
DEGREES OF FREEDOM OF -                    (NK)    0
NUMBER OF CHORDWISE STRESS LOC.    (4)  (NXSIG)    4
NUMBER OF SPANWISE STRESS LOC.     (4)  (NYSIG)    4
NUMBER OF CHORDWISE GEOMETRIC LOC.(5)   (NXGC)    5    0    0    0    0
NUMBER OF SPANWISE GEOMETRIC LOC. (5)   (NYGC)    5    0    0    0    0
NUMBER OF WINGS                    (2)(NWINGS)    2
NUMBER OF FLIGHT CONDITIONS        (1)   (NOFC)    3
NUMBER OF CONCENTRATED MASSES             (NCM)    0
NUMBER OF CONC. MASSES / FLIGHT CDN. (NCMFLT)      4
NUMBER OF EIGENVECTORS RETAINED    (3)   (NEIG)    3
NUMBER OF PLY ANGLE DESIGN VARIABLES  (NDVTH)      0
ANALYSIS/DESIGN VARIABLE LINKING       (IBUFF)   30   31   32   33   34   35
```

(a) Page 1.

Figure 24.- Input copy generated by computer.

ORIGINAL PAGE IS
OF POOR QUALITY

```
*****************************************************************************
*          W A D E S TRAPEZOIDAL WING INITIAL INPUT - VERSION 1/1/75        *
*    F-5A/H WING WEIGHT CORRELATION - DEFAULT STARTING FTT                  *
*****************************************************************************

                PLANFORM VARIABLES                                          BLOCK 2
          ROOT CHORD =      134.5                  SPAN =      151.5
LEADING EDGE SWEEP =       32.0  TRAILING EDGE SWEEP =       -5.0

                THICKNESS & DEPTH COEFFICIENTS
FTT =
            .8000E+00      0.              0.              0.
            .8000E+00      0.
TM  =       .2000E-01
FD  =      0.              0.              0.              0.
           0.              0.              0.              0.
           0.              0.
FC  =      0.              0.              0.              0.
           0.              0.              0.              0.
           0.              0.

                ALTERNATE DEPTH REPRESENTATION
          T/C(ROOT) =    .046000              T/C(TIP) =   0.000000
       X-LOC T/C(R) =  0.000000           X-LOC T/C(T) =   0.000000

                MATERIAL PROPERTIES                                         BLOCK 3
          DENSITIES (WEIGHT/LENGTH**3)
       CORE            SKIN            FUEL
       .008480         .100000         .056000

VOLUME FRACTION AVAILABLE =       0.0000
NON-OPTIMUM WEIGHT.  SKIN =       0.0000  CORE =      0.0000
GRAVITY (LENGTH/SEC**2)   =     386.3070
LOCATION OF WING BOX. L.E.=        .1500   T.E.=       .5500

                MATERIAL MODULUS                        POISSON'S RATIOS
              CORE            SKIN                      CORE            SKIN
   EX        4.2900E+05      1.0500E+07      NUXY       0.000000        .300000
   EY        7.7800E+05      1.0500E+07      NUYX       0.000000        .300000
   GXY       0.               .4000E+07
   GXZ        .3940E+05       .4000E+07
   GYZ        .1186E+06       .4000E+07

                FLIGHT CONDITIONS  -  NOFC =     3                          BLOCK 4

SPEED OF SOUND    12360.0     MACH NUMBER     1.0500   STATIC PRESS     6.3300
         GAMMA     1.4000        ALTITUDE     21500.    LOAD FACTOR     9.8000
   BODY WEIGHT     9597.0  REQUIRED FUEL        0.0   WING LOADING     0.0000

SPEED OF SOUND    13302.0     MACH NUMBER      .2200   STATIC PRESS    14.7000
         GAMMA     1.4000        ALTITUDE         0.    LOAD FACTOR     4.0000
   BODY WEIGHT    10432.0  REQUIRED FUEL        0.0   WING LOADING     1.0000

SPEED OF SOUND    13302.0     MACH NUMBER      .9000   STATIC PRESS    14.7000
         GAMMA     1.4000        ALTITUDE         0.    LOAD FACTOR     9.8000
   BODY WEIGHT     9354.0  REQUIRED FUEL        0.0   WING LOADING     0.0000

                CONCENTRATED MASSES VS FLIGHT CONDITION - NCMFLT =     4   BLOCKS

   XCM        YCM        AMASS
   .5500      .4000     248.00   -4327.00     248.00
   .1000     1.0000     204.00     115.00     115.00
   .3000      .5600       0.00       0.00     112.75
   .3000      .7500       0.00       0.00     119.00
```

(b) Page 2.

Figure 24.- Continued.

ORIGINAL PAGE IS
OF POOR QUALITY

```
*****************************************************************************
*          P A D E S TRAPEZOIDAL WING INITIAL INPUT - VERSION 1/1/75        *
*   F-5A/R WING WEIGHT CORRELATION - DEFAULT STARTING FIT                   *
*****************************************************************************

      CONSTRAINTS, SCALING, & TOLERANCES                                    BLOCK 6
MAXIMUM ALLOWABLE VON MISE'S STRESS    (SMAXT)    63000.000
MINIMUM ALLOWABLE THICKNESS            (TGAGE)       .02000
MAXIMUM ALLOWABLE DISPLACEMENT          (WMAX)      100.000
MINIMUM ALLOWABLE NATURAL FREQUENCY   (EIGMIN)        3.000
MINIMUM ALLOWABLE FLUTTER FREQUENCY    (FFMIN)        3.000
MINIMUM ALLOWABLE FLUTTER MACH NO.     (FMMIN)        2.500
MIN ALLOWABLE FLUTTER DYNAMIC PRESS.   (QFMIN)       23.200
MIN ALLOWABLE DIVERGENCE DYNAMIC PRESS(QDMIN)         0.000

      INITIAL ESTIMATE VS FLIGHT CONDITION
FLUTTER FREQUENCY      12.0000    12.0000    12.0000
FLUTTER MACH NO.        3.0000     3.0000     3.0000

      CONVERGENCE TOLERANCES & SCALING
  FF          FM          1-DIM     DET SCAL   WEIGHT
.00100      .00100      .00010     .50000     .00010


      CONMIN CONTROLS        (DEFAULT)      (VAR)    VALUE                  BLOCK 7
PRINT CONTROL OPTION  (NO=0,YES=0)   (IPRINT) =      0
MAXIMUM NUMBER OF ITERATIONS    (10)   (ITMAX) =     30
SIDE CONSTRAINT PARAMETER              (NSIDE) =      0
SCALING CONTROL PARAMETER              (NSCAL) =      0
GRADIENT CALCULATION CONTROL            (NFDG) =      0
RELATIVE FINITE-DIFF. STEP      (.01)   (FDCH) = 0.00000
MINIMUM FINITE-DIFF. STEP       (.01)  (FDCHM) = 0.00000
CONSTRAINT THICKNESS PARAMETER  (.10)     (CT) = 0.00000
MINIMUM ABS. VALUE OF CT       (.004)  (CTMIN) = 0.00000
LINEAR-CONSTRAINT THICKNESS     (.01)    (CTL) = 0.00000
MINIMUM ABS. VALUE OF CTL       (.01)(CTLMIN) = 0.00000
PUSH-OFF FACTOR                  (1.0)  (THETA) = 0.00000
PARTICIPATION COEFFICIENT        (5.0)    (PHI) = 0.00000
RELATIVE CONVERGENCE OF OBJ    (.001)(DELFUN) = 0.00000
ABSOLUTE CONVERGENCE OF OBJ    (.001)(DABFUN) = 0.00000
CONSECUTIVE ITERATIONS           (3)     (ITUM) =      0

                                                          NO BLOCK 8 OR BLOCK 9
                                                           INFORMATION WAS READ
```

(c) Page 3.

Figure 24.- Concluded.

ORIGINAL PAGE IS
OF POOR QUALITY

```
                    CURRENT DESIGN
        F-5A/B WING WEIGHT CORRELATION - DEFAULT STARTING FIT          JDUMP ≥ 3

          PLANFORM                                  SWEEP ANGLES
ROOT CHORD          =      134.50     LEADING EDGE SWEEP   =      32.0000
SEMISPAN            =      151.50     TRAILING EDGE SWEEP  =      -5.0000
TOTAL WING AREA     =     24403.3

WEIGHTS (NWINGS= 2)     (FORCE)          XCG          YCG
TOTAL WING WEIGHT =       1323.2         75.7         43.2
   SKIN WEIGHT     =       714.7         72.2         40.2                JDUMP ≥ 1
   CORE WEIGHT     =       608.4         79.8         46.7
 FUEL AVAILABLE    =         0.0          0.0          0.0
SKIN STRUCTURE WT =        306.9
CORE STRUCTURE WT =        221.8

 THICKNESS COEFFICIENTS - FIT
      .21374E+01   .60122E+00  -.64771E+00  -.33196E+00
      .61203E+00  -.18054E+01

 MINIMUM GAGE - TMIN
      .20000E-01                                                        JDUMP ≥ 3

 THICKNESS/CHORD (ROOT) =        .0480    (TIP) =       0.0000

 DEPTH COEFFICIENTS - FD
      .12912E+02   .32401E+00   .8981 E+02  -.17810E+03
      .14210E+03

 CAMBER COEFFICIENTS - FC
     0.           0.           0.           0.
     0.

    VON MISES' STRESS DISTRIBUTION VS XI AND ETA                        JDUMP ≥ 2

 ETA  0.0000     XI      .1500      .2500      .3500      .4500
IFLT   1     STRESS    11840.2    17883.0    36830.0    63058.9
IFLT   2     STRESS     4065.4     7794.2    17910.4    32764.9
IFLT   3     STRESS    11727.4    17161.6    35874.9    61860.9

 ETA   .2500     XI      .2959      .3758      .4558      .5357
IFLT   1     STRESS    22962.1    36930.5    50006.7    61548.1
IFLT   2     STRESS    11225.4    17442.8    23169.1    28454.8
IFLT   3     STRESS    22194.3    35736.9    48531.9    59954.6

 ETA   .5000     XI      .4417      .5016      .5615      .6214
IFLT   1     STRESS    27714.8    39855.8    50751.5    60869.4
IFLT   2     STRESS     8054.9     9201.5     9977.0    12731.1
IFLT   3     STRESS    28452.4    41197.4    52665.1    63002.5

 ETA   .7500     XI      .5876      .6274      .6673      .7071
IFLT   1     STRESS    32443.4    32890.8    39247.6    47751.9
IFLT   2     STRESS    11600.5     3770.2     5958.2     8666.1
IFLT   3     STRESS    35117.1    38575.5    46144.1    54150.2

          COMPONENT EDGE LOADINGS                                       JDUMP ≥ 4
STAT IFLT      NX         NY         NXY        NXZ        NYZ      TL(I)
   1    1    329.03     928.04      45.38   -1054.39   -1534.39     .281
   1    2    211.60     743.60     -53.99    -430.35    -310.34     .281
   1    3    404.90    1177.61      51.84   -1059.31   -1461.85     .281
   2    1   -872.65   -3247.95    -182.33   -1225.79   -3370.61     .384
   2    2   -272.31    -830.76    -136.72    -637.03   -1543.61     .384
   2    3   -765.55   -2897.62    -166.83   -1220.26   -3269.29     .384
   3    1  -3252.59  -11302.10    -618.60   -1130.12   -6923.84     .430
   3    2  -1619.61   -5294.31    -223.79    -767.07   -3424.57     .430
   3    3  -3165.12  -11019.94    -594.15   -1128.12   -6733.61     .430
   4    1  -5667.42  -19382.71   -1056.43    -872.84  -11589.08     .422
   4    2  -3388.13  -11192.31    -279.90    -800.46   -5474.79     .422
```

(a) Page 1.

Figure 25.- WADES summary output.

ORIGINAL PAGE IS
OF POOR QUALITY

4	3	-4031.08	-1973.04	-1027.08	-400.20	-11253.79	.022
5	1	-1150.08	-2805.45	-1058.04	-400.75	-290.01	.180
5	2	-755.16	-1205.76	-999.20	-237.50	-217.00	.180
5	3	-1183.78	-2710.12	-1893.08	-400.48	-293.37	.180
6	1	-2583.91	-8522.00	-4213.78	-111.01	84.00	.251
6	2	-1530.09	-2834.18	-3149.18	-37.24	-18.93	.25[illegible]
6	3	-2539.56	-8279.45	-4092.99	-114.41	48.00	.2[illegible]
7	1	-3844.19	-10110.59	-8105.51	300.07	1100.38	.200
7	2	-2109.42	-3894.19	-5171.72	274.84	881.03	.200
7	3	-3908.15	-9727.53	-8422.94	357.01	1125.08	.200
8	1	-4549.86	-12235.53	-7192.77	440.10	2907.46	.278
8	2	-2281.10	-3852.78	-5701.30	547.08	1765.74	.278
8	3	-4490.94	-11745.84	-7011.81	435.95	2751.77	.278
9	1	-1250.96	-1396.95	-1386.15	-534.43	447.89	.107
9	2	-154.02	-59.05	-303.04	-153.70	240.04	.107
9	3	-1287.47	-1352.59	-1432.98	-550.59	429.12	.107
10	1	-2550.86	-2096.99	-2807.15	-150.09	-351.00	.142
10	2	-884.38	-104.12	-416.68	-22.63	-221.07	.142
10	3	-2015.97	-3113.14	-2893.25	-187.81	-384.84	.142
11	1	-3579.54	-4421.59	-3884.31	449.89	-131.89	.158
11	2	-890.24	13.97	-715.63	175.01	-152.91	.158
11	3	-3708.69	-4769.88	-4074.35	447.21	-144.75	.158
12	1	-3997.48	-5120.93	-4507.79	1074.34	1545.27	.159
12	2	-884.58	338.32	-451.22	378.02	839.28	.159
12	3	-4174.09	-5038.25	-4621.49	1090.16	1491.08	.159
13	1	-843.19	-548.35	-554.48	-483.00	559.79	.054
13	2	-80.97	75.72	-8.38	-90.96	360.19	.054
13	3	-840.32	-754.84	-574.41	-447.25	563.35	.054
14	1	-1572.43	-1074.55	-843.16	-149.63	-8.96	.067
14	2	-165.85	42.71	57.82	-45.01	-7.27	.067
14	3	-1621.95	-1524.76	-1183.30	-158.57	11.15	.067
15	1	-2115.71	-1481.91	-1258.81	284.36	-11.44	.074
15	2	-236.98	80.54	148.47	24.84	-112.19	.074
15	3	-2203.87	-2151.45	-1504.82	287.02	2.44	.074
16	1	-2328.84	-1013.54	-1331.37	720.33	771.87	.075
16	2	-289.76	39.84	279.91	101.45	158.93	.075
16	3	-2447.89	-2425.55	-1875.48	719.36	758.33	.075

FLIGHT CONDITION	1	2	3	
ANGLE OF ATTACK (DEG)	19.870	11.020	5.750	JDUMP ≥ 1
FLIGHT DYNAMIC PRESSURE	4.885	.498	6.333	
GROSS LIFT REQUIRED	115877.0	13324.7	110342.5	
EQUIVALENT WING LOADING	4.748	.546	4.787	
TIP DEFLECTION-LEADING EDGE	22.290	5.892	23.743	
TIP DEFLECTION-TRAILING EDGE	29.874	7.154	31.908	
NATURAL FREQUENCY (CPS)	1.870	-I	-I	
NATURAL FREQUENCY (CPS)	3.139	-I	-I	
NATURAL FREQUENCY (CPS)	3.829	-I	-I	

ANALYSIS TIME SUMMARY — JDUMP ≥ 3

FUNCTION	SUBROUTINE	CPUTIME (SEC)
INITIALIZATION & WEIGHTS	WINIT	.000
STIFFNESS MATRIX	STIFF	.334
REDUCTION OF STIFFNESS	MASOB3	.051
STATIC ANALYSIS	LOADS*	.210
NATURAL FREQUENCY	NATFR2	.084
FLUTTER ANALYSIS	FLUTER	0.000
OUTPUT AND PLOTS	WADPLT	0.000
TOTAL ANALYSIS	ANLYS	.691
CONSTRAINTS	(SUBR)	.063
GRADIENTS - FINITE DIFF	(SUBR)	.070
GRADIENTS - ANALYTIC	(SUBR)	0.000
TOTAL OPTIMIZATION	CONMIN	.274

(b) Page 2.

Figure 25.- Concluded.

ORIGINAL PAGE IS
OF POOR QUALITY

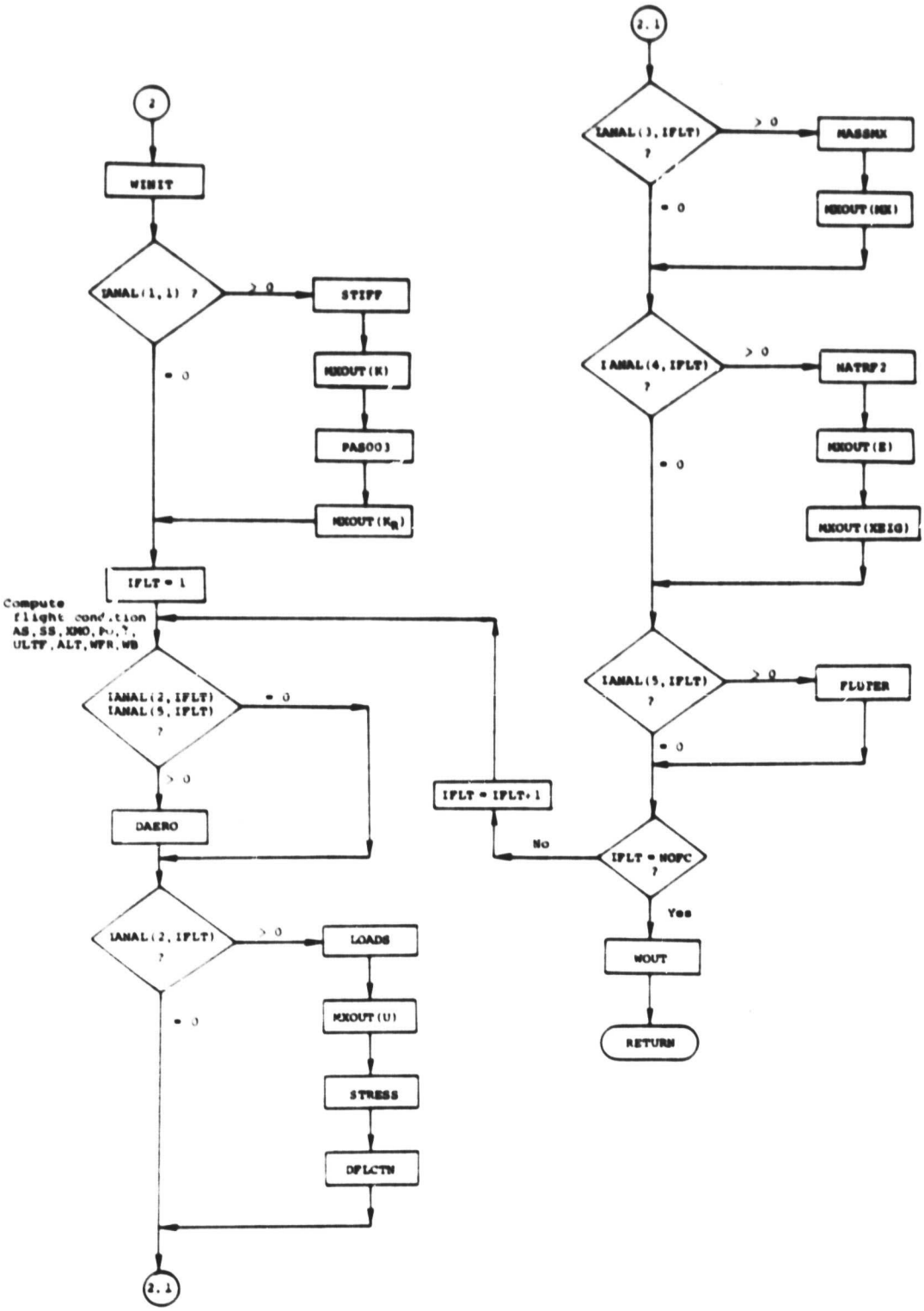

Figure 26.- Flow of ANLYS subroutine calls.

APPENDIX A

CALCULATION OF F-5 EQUIVALENT CORE PROPERTIES

The rib and spar material and structural properties shown in the following tables were used to calculate the equivalent core properties in the F-5 correlation. The values selected here are only representative of actual section properties, since the actual substructure varies with location on the wing. The general approach taken in selecting these properties was either to pick a location which was typical of the stiffness or mass in a critical region of the wing or to obtain an average value of the particular property if applicable. For example, the average density of the ribs and its equivalent distributed value could be calculated directly, since the weight of each rib was known. The general assumptions used in deriving the equivalent distributed section properties are outlined in the section on equivalent core properties. Tables A-I and A-II contain a summary of the representative F-5 spar and rib section properties used in these calculations.

The equivalent core shear stiffness in the y-direction was computed as a component of the shear stiffness along the structural reference axis, $x/c = 0.35$. The actual shear stiffness of the core is approximated as the product of the shear modulus with the sum of the material areas of the F-5 spar shear webs at WS 64:

$$
\begin{aligned}
GA_{ys} &= G\sum A_{web} \\
&= (4.0\times10^{6}\,\text{psi})(0.562 + 0.288 + 0.288 \\
&\quad + 0.428 + 0.759 + 0.324)\,\text{in}^2 \\
&= 11.76\times10^{6}\,\text{lbs} \qquad \text{(A-1)}
\end{aligned}
$$

The equivalent distributed cross-sectional area at WS 64 is:

$$A_{yc} = 0.3\ ct_{av}\cos\theta_s$$

$$= (25.78\ \text{in})(3.6\ \text{in})\cos 20.5^\circ$$

$$= 86.9\ \text{in}^2 \qquad \text{(A-2)}$$

After rotation to the structural reference line, the equivalent core shear modulus in the y-direction becomes:

$$G_{yxc} = \frac{GA_{ys}}{A_{yc}}\cos^2\theta_s$$

$$= \frac{(11.76\times10^6\ \text{lbs})(\cos 20.5^\circ)^2}{86.9\ \text{in}^2}$$

$$= 118{,}600\ \text{psi} \qquad \text{(A-3)}$$

The equivalent core shear stiffness in the x-direction was computed as the sum of the shear stiffnesses of the individual ribs at $(x/c) \approx 0.4$. All ribs were aluminum except the landing gear rib at WS 64, which was steel. The shear stiffness of the F-5 ribs is:

$$(GA_x)_{F5} = GA_{web}$$

$$= (4.0\times10^6\ \text{psi})(1.329 + 0.63 + 0.216 + 0.22 + 0.84)\ \text{in}^2$$

$$= 1.935\times10^7\ \text{lbs} \qquad \text{(A-4)}$$

The equivalent cross-sectional area of structural core in the x-direction is:

$$A_{xc} = (t_{tip} + t_{root})b/2$$

$$= (1.42\ \text{in} + 5.5\ \text{in})(142\ \text{in})$$

$$= 491.3\ \text{in}^2 \qquad \text{(A-5)}$$

The equivalent core shear modulus in the x-direction becomes:

$$G_{xzc} = \frac{(GA_x)_{F5}}{A_{xc}}$$

$$= (1.935\times10^7 \text{ lbs})/491.3 \text{ in}^2$$

$$= 39{,}400 \text{ psi} \qquad \text{(A-6)}$$

The equivalent core bending stiffness in the y-direction was computed as a component of the bending stiffness along the structural reference axis. The structural bending stiffness of the core is computed as the product of modulus of elasticity with the sum of the moments of inertia of the F-5 spars:

$$(EI_x)_{F5} = E \quad (I_x)_{spars}$$

$$= (10.4\times10^6 \text{psi})(1.884 + 0.867 + 0.867$$

$$+ 0.867 + 1.343 + 2.233 + 1.062)\text{in}^4$$

$$= 9.488\times10^7 \text{lbs in}^2 \qquad \text{(A-7)}$$

The equivalent distributed moment of inertia of the core at WS 64 is:

$$I_{xc} = 0.3c(t_{av})^3(\cos\theta_s)/12$$

$$= (25.78 \text{ in})(3.6 \text{ in})^3(\cos 20.5^\circ)/12$$

$$= 93.88 \text{ in}^4 \qquad \text{(A-8)}$$

After rotation to the structural reference line, the equivalent bending modulus in the y-direction becomes:

$$E_{yc} = \frac{(EI_x)_{F5}}{I_{xc}} \cos^4\theta_s$$

$$= (9.488\times10^7 \text{lbs in}^3)(\cos 20.5)^4/93.88 \text{ in}^4$$

$$= 777{,}900 \text{ psi} \qquad \text{(A-9)}$$

The equivalent core bending stiffness in the x-direction was computed as the sum of the bending stiffness of the ribs and a component of the bending stiffness of the spars along the structural axis. All ribs were aluminum except the landing gear rib which was steel. The rib contribution to core bending stiffness is computed as the sum of the products of the moments of inertia of the F-5 ribs with their moduli of eleasticity:

$$(EI_y)_{F5} = (EI_y)_{ribs}$$

$$= (10.4\times10^6 psi)(5.69 + 5.28 + 4.79 + 0.997 + 1.504 + 0.509)\,in^4 + (25\times10^6 psi)(5.28\ in^4)$$

$$= 2.722\times10^8 lbs\ in^2 \qquad \text{(A-10)}$$

The equivalent distributed cross-section moment of inertia for a trapezoidal area integrated from the root to the tip is:

$$I_{yc} = 657.4\ in^4 \qquad \text{(A-11)}$$

The equivalent bending modulus of the core in the x-direction becomes the sum of the components from the ribs and the spars:

$$E_{xc} = \frac{(EI_y)_{F5}}{I_{yc}} + \frac{(EI_x)_{F5}}{I_{xc}} \sin^4\theta_s$$

$$= (2.722\times10^8 lbs\ in^2)/657.4\ in^4 + 15{,}200\ psi$$

$$= 429{,}400\ psi \qquad \text{(A-12)}$$

The equivalent core density of the F-5 was computed as the sum of the densities of the ribs and the spars. The density of the ribs was computed from the weight of the ribs distributed over the volume of the structural planform. The density of the spars was computed from the cross-sectional area of the material in the spars at WS 64 distributed over the cross-sectional area of the wing structure. All spars are considered to be made of aluminum, $\rho_{al} = 0.10\ lbs/in^3$. The area of spar material at WS 64 is:

$$A_{spar} = 0.940 + 0.460 + 0.460 + 0.460 + 0.678 + 1.259 + 0.544$$

$$= 4.801 \text{ in}^2 \qquad \text{(A-13)}$$

Then the density becomes:

$$\rho_{spars} = \rho_{al} \frac{A_{spars}}{A_{yc}}$$

$$= (0.10 \text{ lbs/in}^3)(4.801/86.9)$$

$$= 0.00552 \text{ lbs/in}^3 \qquad \text{(A-14)}$$

The estimated volume contained in the structural planform from the WADES program is:

$$V_{core} = 27,200 \text{ in}^3 \qquad \text{(A-15)}$$

The total of F-5 rib weights is:

$$W_{ribs} = 80.6 \text{ lbs} \qquad \text{(A-16)}$$

The equivalent density of ribs is then:

$$\rho_{ribs} = W_{ribs}/V_{core}$$

$$= 80.6 \text{ lbs}/27,200 \text{ in}^3$$

$$= 0.00296 \text{ lbs/in}^3 \qquad \text{(A-17)}$$

Thus, the net equivalent density of the core for the F-5 becomes:

$$\rho_c = \rho_{ribs} + \rho_{spars}$$

$$= 0.00848 \text{ lbs/in}^3 \qquad \text{(A-18)}$$

TABLE A-I

SUMMARY OF REPRESENTATIVE F-5 SPAR SECTION PROPERTIES

Representative Location	Dimensions	A_{WEB} (in^2)	A_F (in^2)	I_x (in^4)
15% spar at WS 64	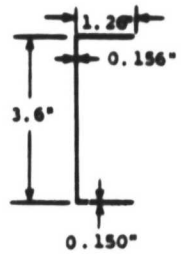	0.562	0.940	1.884
21%, 27% & 33% spars at WS 64	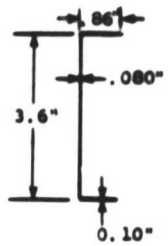	0.288	0.460	0.867
39% spar at WS 64	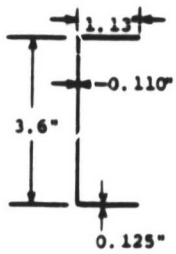	0.396	0.678	1.343
44% spar at WS 64	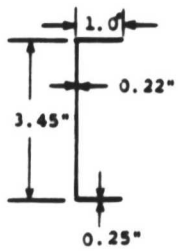	0.759	1.259	2.233
66% spar at WS 64	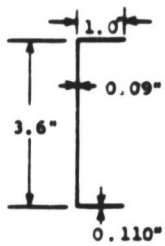	0.324	0.544	1.062

Dimensions obtained from reference 1.

TABLE A-II

SUMMARY OF REPRESENTATIVE F-5 RIB SECTION PROPERTIES

Representative Location	Dimensions	A_{WEB} (in^2)	A_F (in^2)	I_y (in^4)	W (Lbs)
WS 26 (Root Rib)	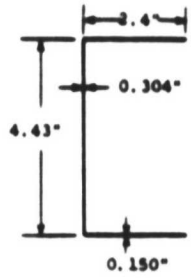	1.329	2.05	5.69	12.45
WS 64 (Landing Gear Rib) Heat Treated Steel	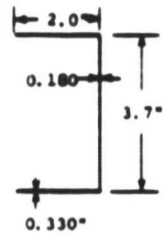	0.646	1.99	5.28	25.0
WS 85 (Pylon Rib)	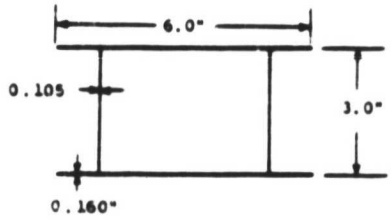	0.63	2.55	4.79	11.55
WS 101 (Aileron Rib)	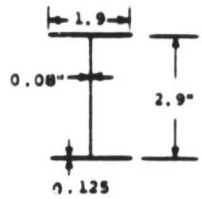	0.216	0.592	0.997	4.15
WS 114 (Pylon Rib)	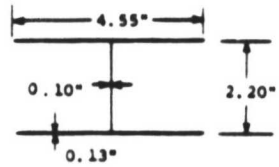	0.22	1.390	1.504	13.30
WS 142 (Wing Tip)	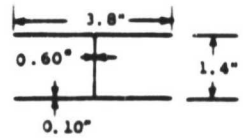	0.84	1.6	0.509	14.00

APPENDIX B

CALCULATION OF F-5 MARGINS OF SAFETY AND SURFACE FIT OF UPPER WING SKIN-THICKNESS DISTRIBUTION

The analysis described below was used to calculate the surface fit of the upper wing skin-thickness distribution and to calculate the margins of safety for the critical loadings specified in reference 1. The calculations and results of this section were used to generate the equal skin-thickness contour plots of the surface fits in figures 3 and 4. The points used in this analysis contain only a representative portion of the total number of panels examined by Northrop.

Table B-I is a summary of the input used in the following calculations. The first three columns contain the panel number and the nondimensional chordwise and spanwise locations on the wing surface. The above locations are ratioed to the root chord and the semispan respectively. In the fourth column is the Northrop flight condition number identifying the critical load condition used to size the particular panel. The parameters B and T are the local panel width and thickness. In all cases the length of the panel will be considered along with respect to the width for the calculation of the buckling stress. The columns FCL and FS give the critical edgewise stresses on each of the panels obtained from examination of all the F-5 loading conditions. The negative sign on the values of edgewise stress represents compression. The last column, TCAP, gives the average total skin thickness at the adjacent spar locations. This value includes the wing skin thickness, the spar cap material, and the skin landing material.

The basic strength design and check of the margins of safety of the F-5A/B wing skin were carried out on the basis of a combined buckling failure analysis. The wing skin was idealized as a series of individual panels bounded by the spars and ribs. Each panel is assumed to be a long, flat rectangular plane of uniform thickness with simply supported edges loaded in shear and compression. Allowable panel buckling stresses have been determined using center panel thicknesses and panel widths between rivet lines. The effects of taper in panel width and thickness were approximated by checking stresses at each end.

The allowables used and margins of safety were obtained from the following equations:

<u>Buckling stress - Edge compression</u>

$$\frac{F_{cr}}{\eta} = KE\left(\frac{t}{b}\right)^2 \qquad \text{(B-1)}$$

where

$$E = 10.5 \times 10^6 \text{psi}$$

$$K = 3.62$$

<u>Buckling stress - Shear</u>

$$\frac{F_{scr}}{\eta} = K_s E\left(\frac{t}{b}\right)^2 \qquad \text{(B-2)}$$

where

$$4.9 \leq K_s \leq 5.75$$

based on b/a ratio.

The allowables F_{cr} and Fs_{cr}, (the compressive and shear allowable stresses), are obtained from interpolation in figures B-1 and B-2, F_{cr} versus F_{cr}/η and Fs_{cr} versus Fs_{cr}/η.

The margins of safety are computed from the interaction equation for a panel subjected to combined edge shear and compressive stress (ref. 1):

$$R_{c1} + R_s^2 = 1.0 \qquad \text{(B-3)}$$

where

$$R_{c1} = \frac{f_{c1}}{F_{max}}$$

and

$$R_s = \frac{f_s}{F_{scr}}$$

The margin of safety becomes

$$M.S. = \frac{2}{\left(R_{c1} + \sqrt{R_{c1}^2 + R_s^2}\right)} - 1 \qquad \text{(B-4)}$$

Table B-II present a summary of the calculation of the allowable stresses and margins of safety for a number of representative panels on the upper skin of the F-5 wing. The values of the stresses and margins of safety essentially duplicate the values shown in the Northrop F-5 wing analysis (ref. 1).

To obtain direct comparison with the F-5 material distribution, a least-squares fit of a polynomial function in the spatial coordinates ξ and η was made of the upper skin thickness and of the effective skin thickness as defined in equation (B-1). The polynomial coefficients from these functional fits were then used in a detailed analysis of the F-5 by the WADES program. The thickness function used to approximate the material distribution was of the form

$$t_{ij}(\xi,\eta) = w_p(\xi,\eta)FT_{ij}(\xi,\eta) + t_{min} \qquad \text{(B-5)}$$

where the function w_p is defined by

$$w_p(\xi,\eta) = \left(\xi - \tan\theta_1 \frac{S}{\bar{R}}\eta\right)\left(-\xi + \tan\theta_2 \frac{S}{\bar{R}}\eta + \frac{R}{\bar{R}}\right) \qquad \text{(B-6)}$$

For the F-5A/B wing configuration, the following values were used:

$$R = \bar{R} = 134.5", \quad S = 151.5", \quad \theta_1 = 32^\circ, \quad \text{and} \quad \theta_2 = -5^\circ$$

The following analysis two functions FT_{ij} were used in order to evaluate the sensitivity to the number of free coefficients necessary to establish a good fit. The two functions were:

$$\begin{aligned} FT_{33} = {} & C_1 + C_4\xi + C_6\xi^2 \\ & + C_2\eta + C_5\xi\eta \\ & + C_3\eta^2 \end{aligned} \qquad \text{(B-7)}$$

and

$$
\begin{aligned}
FT_{44} = {} & C_1 + C_5\xi + C_8\xi^2 + C_{10}\xi^3 \\
& + C_2\eta + C_6\xi\eta + C_9\xi^2\eta \\
& + C_3\eta^2 + C_7\xi\eta^2 \\
& + C_4\eta^3
\end{aligned}
\tag{B-8}
$$

The second function was also used to compute the surface fit of the effective skin-thickness distribution.

The least-squares functional fit of the above equations is obtained by solution of the weighted set of equations which minimize the residual error:

$$
\left.
\begin{array}{l}
\Sigma y f_1 = t_1 \Sigma f_1 f_1 + t_2 \Sigma f_2 f_1 + \ldots + t_N \Sigma f_N f_1 \\
\vdots \qquad\qquad \vdots \qquad\qquad\qquad \vdots \qquad\qquad\qquad \vdots \\
\Sigma y f_N = t_1 \Sigma f_1 f_N + t_2 \Sigma f_2 f_N + \ldots + t_N \Sigma f_N f_N
\end{array}
\right\}
\tag{B-9}
$$

Here the summation is computed for the number of observations and the f_k are the spacial functions corresponding to the k'th free coefficient of FT_{ij}:

$$
f_k = w_p(\xi, \eta)\xi^{j-1}\eta^{i-1} \tag{B-10}
$$

The function y is computed from the actural F-5 skin-thickness values:

$$
y = t - t_{min} \tag{B-11}
$$

Values of t corresponding to the actual F-5 panel thicknesses were used for the initial surface fits. For the surface fit of the effective thickness distribution, values of $t = t_{eff}$ were used. The system of equations (B-9) is solved as a linear system by LDU decomposition.

Table B-III is a summary of the results obtained from the least-squares surface fit of functions described in equations (B-5) through (B-8). The

coefficients have been computed for a nominal value of $t_{min} = 0.02$. The tabulated parameters T33 and T44 are the computed values of t corresponding to equations (B-7) and (B-8). The column FTE contains the computed values of t_{eff} using equation (B-8) to generate the surface fit. The column SIG(VM) is the von Mises' stress as computed from f_{c1} and f_s obtained from reference 1.

ORIGINAL PAGE IS
OF POOR QUALITY

TABLE B-I

TABLE OF CRITICAL DESIGN PARAMETERS

I	X/C	ETA	FLT CDN	B	T	FCL	FS	TCAP
1	0.290	0.00	123C-5	6.27	0.208	-40941.	-53.	0.357
2	0.340	0.00	123C-5	6.49	0.232	-48261.	-293.	0.395
3	0.390	0.00	123C-5	6.52	0.245	-52103.	-363.	0.429
4	0.440	0.00	123C-5	5.75	0.258	-54817.	-2980.	0.508
5	0.490	0.00	123C-5	5.51	0.288	-56694.	-2184.	0.538
6	0.240	0.19	123C-5	6.53	0.242	-46184.	7372.	0.429
7	0.300	0.19	123C-5	6.60	0.255	-50745.	7918.	0.467
8	0.360	0.19	123C-5	5.77	0.258	-55530.	6930.	0.508
9	0.415	0.19	123C-5	5.51	0.288	-57037.	3118.	0.568
10	0.240	0.45	104	4.73	0.185	-45263.	-5643.	0.291
11	0.300	0.45	104	4.86	0.205	-44761.	-6654.	0.321
12	0.360	0.45	104	4.17	0.169	-47875.	-7680.	0.325
13	0.415	0.45	104	4.15	0.182	-48248.	-5568.	0.355
14	0.240	0.59	104	3.96	0.150	-35706.	-3660.	0.257
15	0.300	0.59	104	4.08	0.165	-37005.	-4915.	0.173
16	0.360	0.59	104	3.31	0.133	-43701.	-6677.	0.287
17	0.415	0.59	104	3.44	0.145	-43214.	-6545.	0.327
18	0.550	0.59	382	7.50	0.110	-1287.	6927.	0.308
19	0.180	0.72	361	3.19	0.125	-26275.	-6496.	0.250
20	0.240	0.72	361	3.32	0.130	-30720.	-8325.	0.250
21	0.300	0.72	361	3.50	0.130	-34304.	-9269.	0.250
22	0.360	0.72	361	2.62	0.135	-34894.	-9401.	0.252
23	0.415	0.72	361	2.90	0.135	-36065.	-8995.	0.289
24	0.195	0.88	361	3.14	0.128	-15807.	13523.	0.270
25	0.285	0.88	361	3.71	0.132	-18634.	16121.	0.270
26	0.375	0.88	361	3.94	0.130	-19646.	16792.	0.270
27	0.475	0.88	361	3.14	0.124	-14347.	19363.	0.270
28	0.545	0.88	361	3.51	0.113	-14313.	19947.	0.270
29	0.620	0.88	361	3.68	0.112	-13362.	17426.	0.295

ORIGINAL PAGE IS
OF POOR QUALITY

TABLE B-II

COMPUTED CRITICAL STRESSES AND MARGINS OF SAFETY

I	FCR/E	FCR	FMAX	FSCR/E	FSCR	RCL	RS	M.S.
1	41830.	41830.	49549.	66443.	38631.	0.826	0.001	0.210
2	48572.	48572.	51071.	77151.	40058.	0.945	0.007	0.058
3	53670.	52936.	53282.	85250.	41030.	0.978	0.009	0.023
4	76525.	63957.	63957.	121552.	44724.	0.857	0.067	0.160
5	103844.	69000.	69000.	164945.	46000.	0.822	0.047	0.213
6	52204.	51763.	52490.	82920.	40750.	0.880	0.193	0.086
7	56740.	55114.	55114.	90126.	41615.	0.921	0.190	0.043
8	75995.	63799.	63799.	120710.	44657.	0.870	0.155	0.115
9	103844.	69000.	69000.	164945.	46000.	0.827	0.068	0.202
10	58146.	56013.	56013.	92359.	41883.	0.808	0.135	0.205
11	67629.	60804.	60804.	107422.	43442.	0.736	0.153	0.304
12	62431.	58415.	58415.	99165.	42616.	0.820	0.180	0.166
13	73105.	62856.	62856.	116119.	44290.	0.768	0.126	0.269
14	54537.	53629.	53750.	86626.	41195.	0.664	0.094	0.477
15	62165.	58282.	58282.	98743.	42574.	0.635	0.115	0.526
16	61368.	57884.	57884.	97477.	42448.	0.755	0.157	0.272
17	67533.	60764.	60764.	107269.	43427.	0.711	0.151	0.348
18	8176.	8176.	28217.	12987.	12987.	0.046	0.687	0.407
19	58363.	56152.	56152.	92703.	41924.	0.468	0.155	0.943
20	58278.	56098.	56098.	92569.	41908.	0.548	0.199	0.634
21	52438.	51951.	52617.	83293.	40795.	0.652	0.227	0.382
22	100917.	69000.	69000.	160296.	46000.	0.506	0.204	0.730
23	82370.	65711.	65711.	130836.	45450.	0.549	0.198	0.632
24	63162.	58781.	58781.	100327.	42733.	0.269	0.316	1.091
25	48117.	48117.	50999.	75429.	39971.	0.365	0.403	0.599
26	41380.	41380.	49414.	65728.	38516.	0.398	0.436	0.475
27	59276.	56737.	56737.	94154.	42099.	0.253	0.460	0.057
28	39395.	39395.	48782.	62575.	38012.	0.293	0.525	0.446
29	35208.	35208.	47275.	55924.	36866.	0.283	0.473	0.575

ORIGINAL PAGE IS
OF POOR QUALITY

TABLE B-III

SUMMARY OF SURFACE FITS

SURFACE FIT OF THICKNESS FUNCTION

IFT = 4 JFT = 4 NFT = 10 TMIN = 0.020

1.42811	11.4156	-0.527329	33.8763	-3.04635	-25.4222
-46.1035	4.10287	27.2395	1.20676		

SURFACE FIT OF THICKNESS FUNCTION

IFT = 3 JFT = 3 NFT = 6 TMIN = 0.020

1.36769	6.99752	7.63472	-2.38482	-15.9313	3.61314

SURFACE FIT OF EFFECTIVE SKIN THICKNESS FUNCTION

IFT = 4 JFT = 4 NFT = 10 TMIN = 0.020

0.730536	7.29953	-14.4040	39.5250	3.75508	4.35044
-27.4964	-14.4278	-11.1797	18.5278		

TABLE OF THICKNESS FIT VALUES

I	X/C	ETA	XI	T	T33	T44	SIG(VM)	TEFF	FTE
1	0.290	0.000	0.290	0.2080	0.2218	0.2096	40941.	0.2318	0.2317
2	0.340	0.000	0.340	0.2320	0.2387	0.2256	48262.	0.2571	0.2528
3	0.390	0.000	0.390	0.2450	0.2548	0.2431	52104.	0.2732	0.2745
4	0.440	0.000	0.440	0.2580	0.2708	0.2633	54898.	0.3015	0.3004
5	0.490	0.000	0.490	0.2880	0.2866	0.2862	56736.	0.3334	0.3339
6	0.240	0.190	0.335	0.2420	0.2255	0.2436	46850.	0.2706	0.2668
7	0.300	0.190	0.386	0.2550	0.2350	0.2591	51359.	0.2871	0.2956
8	0.360	0.190	0.437	0.2560	0.2353	0.2714	55961.	0.3013	0.3171
9	0.415	0.190	0.483	0.2860	0.2299	0.2830	57122.	0.3388	0.3342
10	0.240	0.450	0.464	0.1850	0.2000	0.1798	45613.	0.2074	0.1994
11	0.300	0.450	0.503	0.2050	0.2072	0.1803	45253.	0.2289	0.2078
12	0.360	0.450	0.541	0.1690	0.2044	0.1750	48487.	0.2064	0.2076
13	0.415	0.450	0.576	0.1820	0.1949	0.1678	48571.	0.2237	0.2030
14	0.240	0.590	0.534	0.1500	0.1674	0.1561	35914.	0.1770	0.1832
15	0.300	0.590	0.566	0.1650	0.1751	0.1556	37330.	0.1670	0.1901
16	0.360	0.590	0.598	0.1330	0.1747	0.1507	44208.	0.1755	0.1884
17	0.415	0.590	0.627	0.1450	0.1685	0.1418	43707.	0.1979	0.1814
18	0.550	0.590	0.698	0.1100	0.1368	0.1157	9019.	0.1364	0.1515
19	0.180	0.720	0.573	0.1250	0.1161	0.1292	27066.	0.1642	0.1564
20	0.240	0.720	0.599	0.1300	0.1307	0.1414	31828.	0.1661	0.1763
21	0.300	0.720	0.624	0.1300	0.1383	0.1454	35534.	0.1643	0.1864
22	0.360	0.720	0.650	0.1350	0.1400	0.1432	36138.	0.1797	0.1883
23	0.415	0.720	0.673	0.1350	0.1372	0.1372	37170.	0.1881	0.1843
24	0.195	0.880	0.665	0.1280	0.0771	0.1069	20802.	0.1732	0.1378
25	0.285	0.880	0.692	0.1320	0.0886	0.1226	24640.	0.1692	0.1628
26	0.375	0.880	0.719	0.1300	0.0927	0.1271	25844.	0.1655	0.1730
27	0.475	0.880	0.749	0.1240	0.0901	0.1222	24099.	0.1705	0.1701
28	0.545	0.880	0.769	0.1130	0.0847	0.1141	24551.	0.1577	0.1608
29	0.620	0.880	0.792	0.1120	0.0765	0.1024	21961.	0.1617	0.1456

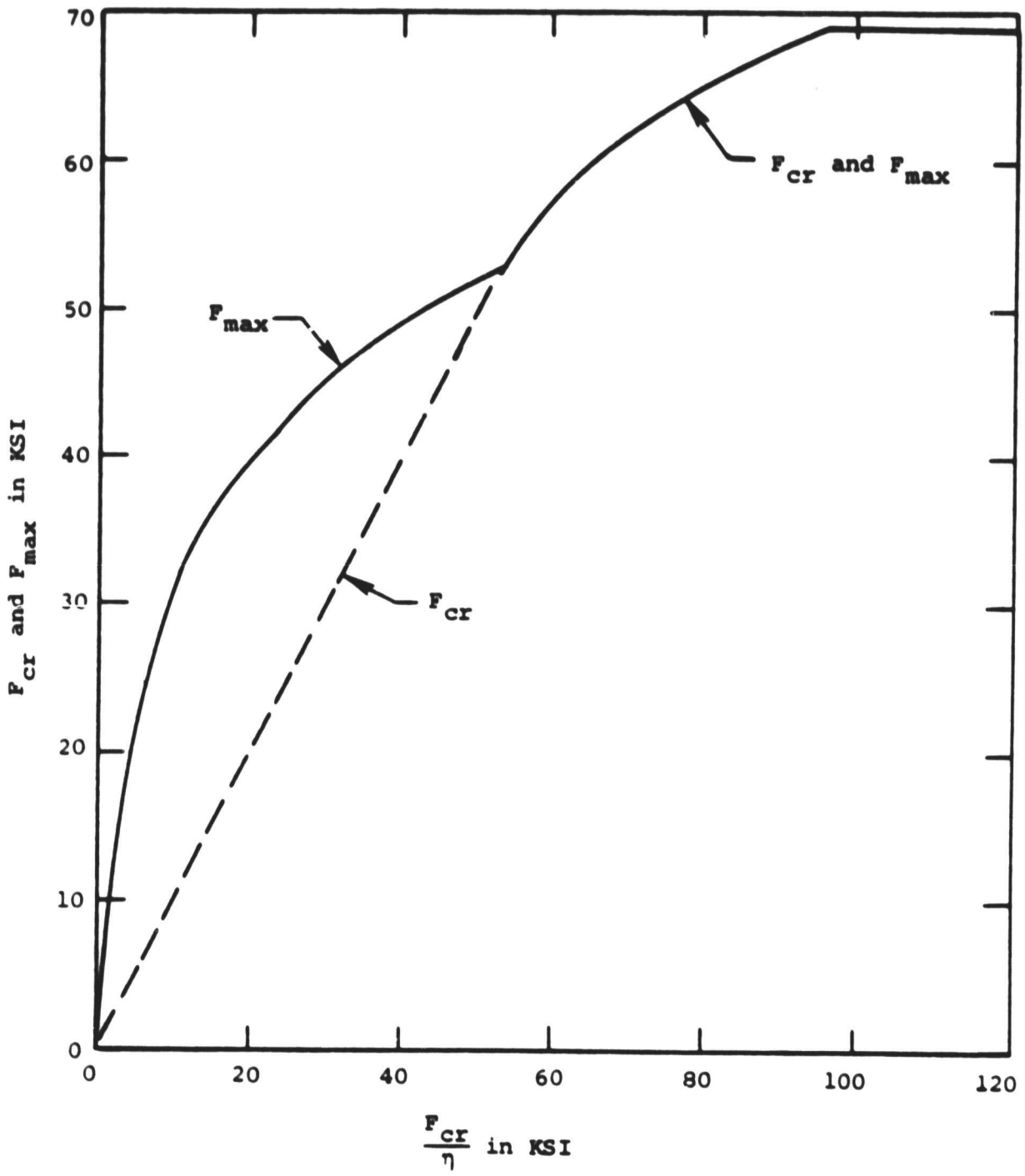

Figure B-1.- Initial and maximum allowable buckling stresses, 7075-T6 bare sheet and plate.

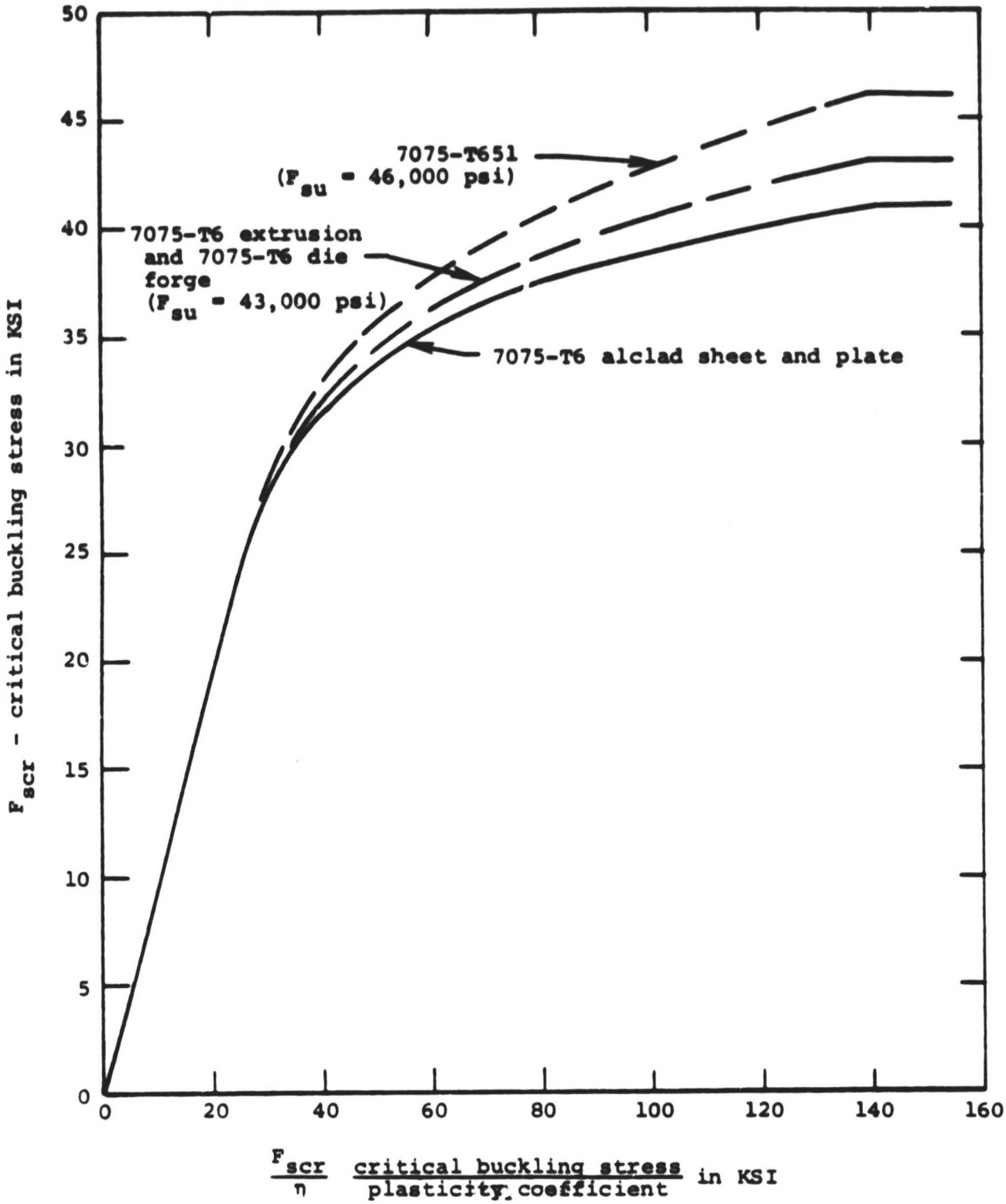

Figure B-2.- F_{scr} versus F_{scr}/η, 7075-T6 and 7079-T6 aluminum alloys.

APPENDIX C

STIFFNESS FORMULATION OF SUBSONIC STEADY-STATE WING LOADING

The purpose of this appendix is to explain the derivation of static equilibrium conditions required for the calculation of the subsonic steady-state wing loadings on a flexible wing. The derivation of the aerodynamic principles underlying this appendix are summarized here and are explained in depth in reference 11. The assumptions common to airfoil theory that apply include: (1) the flow is potential with negligible effects from boundary layers, separation, or shocks; (2) the wing thickness is small; (3) a stagnation point exists at the wing trailing edge; (4) the angle of attack, α, is small so that $\tan \alpha \approx \sin \alpha \approx \alpha$ (radians); and (5) the spanwise lift distribution due to a given horseshoe vortex is constant over its span of application. The equations used to describe the steady-state equilibrium are outlined below.

The lift or circulation distribution, which varies along the span of a wing, can be visualized as resulting from a system of horseshoe vortices, each of which is of constant strength. Such a system of horseshoe vortices is illustrated in figures C-1 and C-2. It is obvious from the figures that the shape of the actual load distribution may be approximated to any degree of accuracy by a suitable number of horseshoe vortices. The relationship used to describe the lift of each vortex due to the local angle of attack at a given spanwise station is

$$\left\{\alpha_f\right\} = \left[\frac{1}{4qm_o}\right]\left[S_1\right]\left\{\ell\right\} \tag{C-1}$$

where $\left[S_1\right]$ is the aerodynamic-induction or downwash matrix, which contains the effects of wing planform geometry; q is the free-stream dynamic pressure; $\left[m_o\right]$ is a matrix of two-dimensional section lift-curve slopes; $\left\{\ell\right\}$ is a vector of section lifts per unit span; and $\left\{\alpha_f\right\}$ is a vector of final section angles of attack.

The final angle-of-attack variation across the span, $\left\{\alpha_f\right\}$, can be considered to be composed of four parts:

$$\left\{\alpha_f\right\} = \left\{\alpha_r\right\} + \left\{\alpha_o\right\} + \left\{\alpha_s\right\} + \left\{\alpha_\delta\right\} \tag{C-2}$$

Here $\{\alpha_r\}$ is the angle of attack of the root-section zero-lift line; $\{\alpha_o\}$ is the section angle of attack due to twist $\{\alpha_t\}$ and due to deformation resulting from the presence of external stores or forces on the wing $\{\alpha_{cm}\}$; $\{\alpha_s\}$ is the angle of attack caused by structural deflection of a flexible wing due to aerodynamic forces; and $\{\alpha_\delta\}$ is the induced angle of attack due to aileron or flap deflection, δ.

The deformation perpendicular to the plane of the wing is related to the section lift per unit span as follows:

$$[K]\{w_s + w_{cm}\} = [T_w]\{\ell\} \tag{C-3}$$

where $[K]$ is the stiffness matrix, $\{w_s\}$ and $\{w_{cm}\}$ are the structural deformations due to aerodynamic and concentrated mass loadings respectively, and $[T_w]$ is the transformation relating the spanwise loading to work equivalent loadings in the structure. This transformation is detailed later in this appendix.

The remaining equations describing the steady-state equilibrium condition are derived from the static balance requirements of the vanishing of the summation of forces normal to the wing and for the vanishing of the resulting moments in pitch and roll. The forces and moments resulting from the aircraft body center-of-gravity load, W, the tail load, P_t, and the externally located concentrated masses, W_{cm}, are included as shown in figures C-1 and C-2. The effects of roll are included in this derivation by the addition of a loading proportional to a control-surface deflection, δ. When vehicle symmetry is assumed, all terms associated with this deflection vanish. The following symmetry constant is defined:

$$\beta = \begin{cases} 1, & \text{nonsymmetric planforms} \\ 2, & \text{symmetric planforms} \end{cases}$$

Summation of forces normal to the wing gives

$$\beta\{2h\}^T\{\ell\} = -P_T + nW + \beta n\Sigma W_{cm} \tag{C-4}$$

Summation of moments about the pitch (y-) axis gives

$$\beta\{2hx_v\}^T\{\ell\} = -P_T x_T + nWx_a + \beta n\left(\Sigma W_{cm} x_{cm}\right) + \beta q\{2hc^2\}^T\{C_{m_\delta}\}\delta \tag{C-5}$$

Summation of moments about the roll (x-) axis gives

$$\{2hy_v\}^T\{\ell\} = n\Sigma W_{cm}y_{cm} \tag{C-6}$$

Here h is the semi-width of a given bound vortex, n is the load factor, x_v, y_v define the location of the centroid of application of the section lift, x_{cm}, y_{cm} define the location of the concentrated masses, c is the section average chord length, and $\{c_{m_\delta}\}$ is the rate of change of section-moment coefficient with respect to control-surface deflection. When $\beta = 1$, panel coeffients and masses for both wings must be given. If $\beta = 2$, only the symmetric panel or mass is used.

The following equations relate the components of equation (C-2) to their appropriate variables:

$$\{\alpha_r\} = \{1\}\alpha_r \tag{C-7}$$

$$\{\alpha_s\} = [T_\alpha]\{w_s\} \text{ and } \{\alpha_{cm}\} = [T_\alpha]\{w_{cm}\} \tag{C-8}$$

$$\{\alpha_o\} = \{\alpha_t\} + \{\alpha_{cm}\} \tag{C-9}$$

$$\{\alpha_\delta\} = \{m_\delta\}\delta \tag{C-10}$$

where $\{m_\delta\}$ is the ratio of the local lift-curve slope with respect to control-surface deflection, to the local lift-curve slope with respect to angle of attack and $[T_\alpha]$ is the transformation relating the local section angle of attack due to deformation of the corresponding structural displacements. This transformation has been derived from a least-squares fit of the structural deformation in the chordwise direction at each section and is detailed later in this appendix.

By use of the equations of this appendix, the equilibrium conditions, including pitch and roll trim, are derived as follows. From equations (C-1), (C-2), (C-3), (C-8), and (C-9), the structural deformation is expressed in terms of the root angle of attack, local twist, and control-surface deflection:

$$\left([K] - [T_w][4qm_o][S_1]^{-1}[T_\alpha]\right)\{w_s + w_{cm}\} = [T_w][4qm_o][S_1]^{-1}\left(\{\alpha_r\} + \{\alpha_t\} + \{\alpha_\delta\}\right) \tag{C-11}$$

or

$$\left.\begin{aligned} \{w_s + w_{cm}\} &= [T_k]\left(\{\alpha_r\} + \{\alpha_t\} + \{\alpha_\delta\}\right) \\ [T_k] &= \left([K] - [T_w][4qm_o][S_1]^{-1}[T_\alpha]\right)^{-1}[T_w][4qm_o][S_1]^{-1} \end{aligned}\right\} \quad \text{(C-12)}$$

The local section lift may then be written as

$$\langle \ell \rangle = [4qm_o][S_1]^{-1}\left[\{\alpha_r\} + \{\alpha_t\} + \{\alpha_\delta\} + [T_\alpha][T_k]\left(\{\alpha_r\} + \{\alpha_t\} + \{\alpha_\delta\}\right)\right] \quad \text{(C-13)}$$

From equation (C-6) and the results of (C-13), the control-surface deflection required for trim in roll becomes:

For a symmetric planform $(\beta = 2)$, $\delta = 0$

For a nonsymmetric planform $(\beta = 1)$,

$$\delta = \frac{C4 - C6}{C7} - \frac{C5}{C7}\alpha_r$$

$$\left.\begin{aligned} C4 &= n\Sigma W_{cm}y_{cm} \\ C5 &= \{2hy_v\}^T[4qm_o][S_1]^{-1}\left[\langle 1 \rangle + [T_\alpha][T_k]\langle 1 \rangle\right] \\ C6 &= \{2hy_v\}^T[4qm_o][S_1]^{-1}\left[\{\alpha_t\} + [T_\alpha][T_k]\{\alpha_t\}\right] \\ C7 &= \{2hy_v\}^T[4qm_o][S_1]^{-1}\left[\{m_\delta\} + [T_\alpha][T_k]\{m_\delta\}\right] \end{aligned}\right\} \quad \text{(C-14)}$$

The root angle of attack is derived from equations (C-4) and C-5) and the results of (C-13) and (C-14) as

$$\alpha_r = \frac{C11}{C12}$$

where

$$
\left.
\begin{aligned}
C11 = {} & \beta\left(\{2hx_v\}^T - x_T\{2h\}^T\right)\left[4qm_o\right]\left[S_1\right]^{-1}\Big[\{1\} + \left[T_\alpha\right]\left[T_k\right]\{1\} \\
& - \frac{C5}{C7}\left(\{m_\delta\} + \left[T_\alpha\right]\left[T_k\right]\{m_\delta\}\right)\Big] + \beta q\{2hc^2\}^T\{C_{m_\delta}\}\,\frac{C5}{C7} \\
C12 = {} & \beta\left(\{2hx_v\}^T - x_T\{2h\}^T\right)\left[4qm_o\right]\left[S_1\right]^{-1}\Big[\frac{C4 - C6}{C7}\left(\{m_\delta\} + \left[T_\alpha\right]\left[T_k\right]\{m_\delta\}\right) \\
& + \{\alpha_t\} + \left[T_\alpha\right]\left[T_k\right]\{\alpha_t\}\Big] - nW(x_a - x_T) - n\beta\Sigma W_{cm}(x_{cm} - x_T) \\
& - \beta q\{2hc^2\}^T\{C_{m_\delta}\}\,\frac{C4 - C6}{C7}
\end{aligned}
\right\} \quad \text{(C-15)}
$$

The tail load required for static equilibrium becomes, from (C-4),

$$P_t = nW + \beta n\Sigma W_{cm} - \beta\{2h\}^T\{\ell\} \qquad \text{(C-16)}$$

where a positive P_t would result in a pitch-down moment for a rear-mounted tail configuration, and the lift distribution, $\{\ell\}$, is obtained by substitution of equations (C-14) and (C-15) into (C-13).

Integration into WADES Program

The above system of equations has been integrated into the WADES program to provide it with a simplified subsonic aerodynamic loads capability. This version is optionally available at load time during program execution. See the program documentation for usage

A number of the aerodynamic section properties are defaulted to theoretical values in the January 1975 version of the program. The internally defined properties are: (1) the lift-curve slope $\{m_o\} = 6.28$; (2) the section-moment coefficient $\{C_{m_\delta}\} = 0$; (3) no control-surface moment, $\{m_\delta\} = 0$; and (4) the aircraft body center of gravity is set approximately at the aerodynamic center. The loads analysis is restricted to symmetric configurations because of other program restrictions. To obtain a reasonable estimate of the shape of the spanwise load distribution, the number of horseshoe vortices is internally limited to the number of degrees of freedom used to describe the normal deformation of the wing surface.

Derivation of Transformations T_α and T_w

The transformation $[T_\alpha]$ as used in equation (C-8) defines the relationship of the structural deformation to the change in local section angle of attack. Since the WADES program uses assumed modes of deformation that allow for local chordwise curvature, a relationship was derived to approximate the rigid-body motion of the section airfoil. In order to make this approximation, a least-squares procedure was derived to fit a linear function to the deformed shape. The following equations outline that approximation and the calculation of the resulting transformation.

The least-squares fit is obtained by assuming that at the k'th control point on the wing the structural deformation can be approximated by the linear function

$$w_k(\xi) = a_1 + a_2\xi \tag{C-17}$$

The least-squares problem then is defined as

$$\left.\begin{aligned} \Sigma w(\xi, \eta_k) &= a_1 n + a_2 \Sigma\xi \\ \Sigma w(\xi, \eta_k)\xi &= a_1 \Sigma\xi + a_2 \Sigma\xi^2 \end{aligned}\right\} \tag{C-18}$$

where n is the number of chordwise points at which the function is summed. This problem may then be transformed to an integral form by multiplying both sides by the distance between points and taking the limit as the increment vanishes. Then (C-18) becomes

$$\left.\begin{aligned} \int_{LE}^{TE} w(\xi, \eta_k)d\xi &= a_1 \int d\xi + a_2 \int \xi d\xi \\ \int_{LE}^{TE} w(\xi, \eta_k)\xi d\xi &= a_1 \int \xi d\xi + a_2 \int \xi^2 d\xi \end{aligned}\right\} \tag{C-19}$$

or

$$\left.\begin{aligned} \{f_1\}^T\{w\} &= a_1x_1 + a_2x_2 \\ \{f_2\}^T\{w\} &= a_1x_2 + a_2x_3 \end{aligned}\right\} \tag{C-20}$$

where the functions $\{f_1\}$ and $\{f_2\}$ can be defined in terms of the model shapes of the displacement function as

$$\left.\begin{aligned} \{f_1\} &= \int_{LE}^{TE} \left\{\phi_{w_j}(\xi, \eta_k)\right\} d\xi \\ \{f_2\} &= \int_{LE}^{TE} \left\{\phi_{w_j}(\xi, \eta_k)\xi\right\} d\xi \end{aligned}\right\} \tag{C-21}$$

Since the angle of attack is defined as the chordwise slope of the function, the angle due to structural deformation can be expressed as

$$\alpha_k = -\frac{\partial w_k}{\bar{R}\partial\xi} = -\frac{a_2}{\bar{R}} \tag{C-22}$$

where the angle is in radians. By solving for the coefficient a_2 in equation (C-20) the angle due to structural deformation at the k'th control station becomes

$$\alpha_k = -\left(\frac{x_1\{f_2\}^T - x_2\{f_1\}^T}{x_1x_3 - x_2^2}\right)\{w\} \tag{C-23}$$

The resulting set of equations using the above approximation evaluated at each of the control points produces the relationship

$$\{\alpha\} = \left[T_\alpha\right]\{w\} \tag{C-24}$$

The transformation $\left[T_w\right]$ as defined in equation (C-3) relates the section lift to the work equivalent loads generated by applying the lift as a concentrated force at its appropriate control point. The work equivalent load in terms of the variation of external work may be written as

$$q_i = \frac{\partial}{\partial w_i} \iint 2h\ell_j \delta\left(x_{v_j}\right) \delta\left(y_{v_j}\right) \phi_{w_i}(\xi, \eta) w_i d_\xi \, d\eta$$

$$= 2h\ell_j \phi_{w_i}\left(\xi_{v_j}, \eta_{v_j}\right)$$

and therefore the coefficients of the transformation may be expressed as

$$Tw_{ij} = 2h\phi_{w_i}\left(\xi_{v_j}, \eta_{v_j}\right)$$

where ξ_{v_j}, η_{v_j} are the nondimensional locations of the control points x_{v_j}, y_{v_j}.

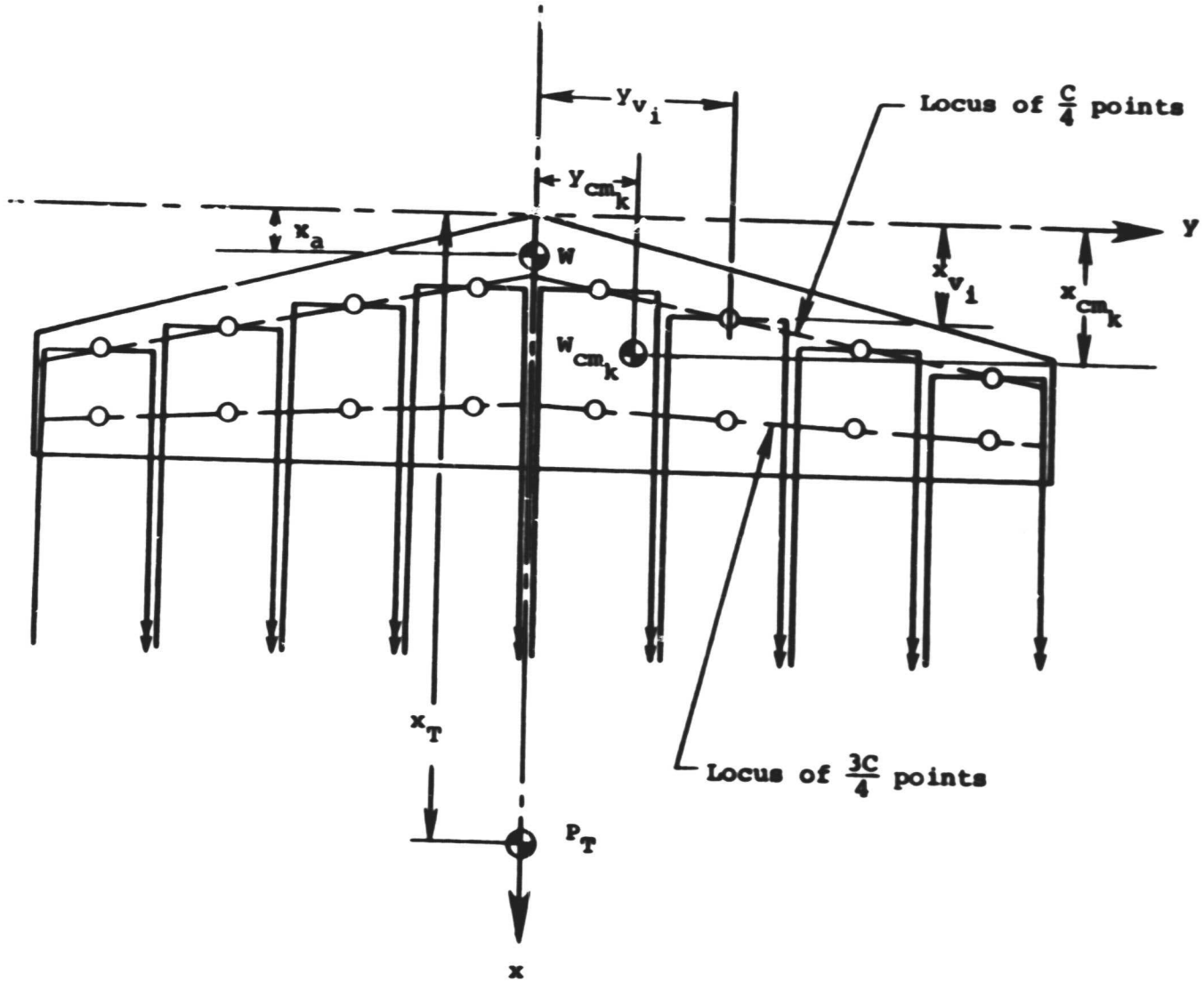

Figure C-1.- Planform view of wing showing placement of horseshoe vortices and weights.

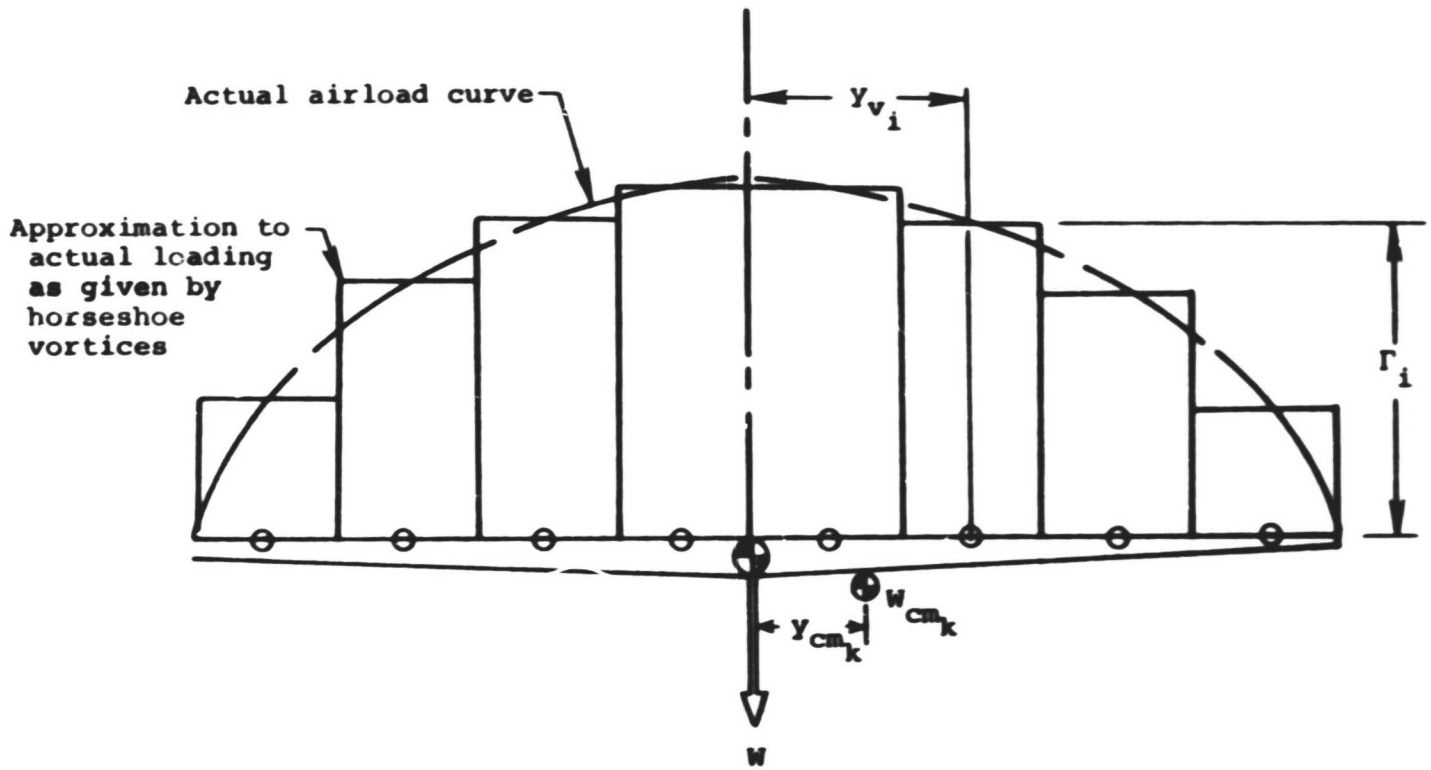

Figure C-2.- View of wing along x-axis showing placement of horseshoe vortices and weights.

REFERENCES

1. Anderson, G. O. and Betz, V. L.: F-5A/B Wing Stress Analysis. Northrop Norair Report N.R-62-94, January 1964.

2. Andersen, G. O. and Betz, V. L.: F-5A/B Wing Section Properties, Shear Flow, and Bending Stress Distribution. Vol. I, Revision "A", January 1965; Vol. II Revision "B", April 1965. Northrop Norair Report NOR-62-92, September 1963.

3. Gainer, R. E. and Hughes, W. D.: Moment of Inertia and Dead Weight Distribution Report, F-5A Fighter and F-5B Fighter-Trainer. Northrop Norair Report NOR-64-34, July 1964.

4. Gainer, R. E.: F-5E Moment of Inertia and Mass Distribution Report. Northrop Corporation, Aircraft Division Report NOR 73-85, June 1973.

5. Kolar, C. J. and Rooney, T. R.: F-5 Flutter Summary Report. Northrop Norair Report NOR 63-97, August 1964.

6. Kolar, C. J., Lile, J. W., and Cheng, C.: F-5E Flight Flutter Test Report. Northrop Corporation, Aircraft Division Report NOR 71-160, January 1974.

7. Northrop Corporation, Norair Division: F-5A/B Wing Design Loads. Report NOR 62-89, September 1974.

8. Northrop Corporation, Norair Division: Moment of Inertia and Mass Distribution. Report NOR 67-148, September 1968.

9. Northrop Corporation, Norair Division: Structural Static Test of the F-5A/B Airplane. Report NOR 64-151, October 1964.

10. General Dynamics/Convair: Compilation of Group Weight Statements for Various Aircraft Section I, Fighters. Report No. GDC-BJF-67-002, January 1967.

11. Gray, W. L. and Schenk, K. M.: A Method for Calculating the Subsonic Steady-State Loading on an Airplane with a Wing of Arbitrary Planform and Stiffness. NACA TN 3030, December 1953.

12. Zoutendijk, G.: Methods of Feasible Directions. Elsevier Publishing Co., Amsterdam, 1960.

13. Vanderplaats, G. N. and Moses, F.: Structural Optimization by Methods of Feasible Directions. Computers & Structures, vol. 3, 1973, pp. 739-755.

14. Vanderplaats, G. N.: CONMIN - A Fortran Program for Constrained Function Minimization, User's Manual. NASA TM X-62,282, August 1973.

15. Chamis, C. C.: Computer Code for the Analysis of Multilayered Fiber Composites - Users Manual. NASA TN D-7013, March 1971.

16. Miwa, H.: An Optimal Configuration Design of Lifting Surface Type Structures Under Dynamic Constraints. Ph.D. Thesis, Div. of Solid Mechanics, Structures and Mechanical Design, Case Western Reserve University, Report No. 48, January 1972.