General Disclaimer

One or more of the Following Statements may affect this Document

- This document has been reproduced from the best copy furnished by the organizational source. It is being released in the interest of making available as much information as possible.

- This document may contain data, which exceeds the sheet parameters. It was furnished in this condition by the organizational source and is the best copy available.

- This document may contain tone-on-tone or color graphs, charts and/or pictures, which have been reproduced in black and white.

- This document is paginated as submitted by the original source.

- Portions of this document are not fully legible due to the historical nature of some of the material. However, it is the best reproduction available from the original submission.

Produced by the NASA Center for Aerospace Information (CASI)

JPL PUBLICATION 81-101

Future Fuels and Engines for Railroad Locomotives

Volume I: Summary

S. G. Liddle, Task Manager
B. B. Bonzo
G. P. Purohit
J. A. Stallkamp

(NASA-CR-168642) FUTURE FUELS AND ENGINES FOR RAILROAD LOCOMOTIVES. VOLUME 1: SUMMARY (Jet Propulsion Lab.) 41 p HC A03/MF A01 CSCL 13F
N82-20022
Unclas
G3/85 09283

MAR 1982
RECEIVED
NASA STI FACILITY
ACCESS DEPT.

November 1, 1981

Prepared for
U.S. Department of Energy
Through an Agreement with
National Aeronautics and Space Administration
by
Jet Propulsion Laboratory
California Institute of Technology
Pasadena, California

JPL PUBLICATION 81-101

Future Fuels and Engines for Railroad Locomotives

Volume I: Summary

S. G. Liddle, Task Manager
B. B. Bonzo
G. P. Purohit
J. A. Stallkamp

November 1, 1981

Prepared for
U.S. Department of Energy
Through an Agreement with
National Aeronautics and Space Administration
by
Jet Propulsion Laboratory
California Institute of Technology
Pasadena, California

Prepared by the Jet Propulsion Laboratory, California Institute of Technology, for the U.S. Department of Energy through an agreement with the National Aeronautics and Space Administration.

This report was prepared as an account of work sponsored by an agency of the United States Government. Neither the United States Government nor any agency thereof, nor any of their employees, makes any warranty, express or implied, or assumes any legal liability or responsibility for the accuracy, completeness, or usefulness of any information, apparatus, product, or process disclosed, or represents that its use would not infringe privately owned rights.

Reference herein to any specific commercial product, process, or service by trade name, trademark, manufacturer, or otherwise, does not necessarily constitute or imply its endorsement, recommendation, or favoring by the United States Government or any agency thereof. The views and opinions of authors expressed herein do not necessarily state or reflect those of the United States Government or any agency thereof.

PRECEDING PAGE BLANK NOT FILMED

ABSTRACT

A study was made of the potential for reducing the dependence of railroads on petroleum fuel, particularly Diesel No. 2. The study takes two approaches: (1) to determine how the use of Diesel No. 2 can be reduced through increased efficiency and conservation, and (2) to use fuels other than Diesel No. 2 both in Diesel and other types of engines. The study consists of two volumes; Volume I is a summary and Volume II is the technical document.

The study indicates that the possible reduction in fuel usage by increasing the efficiency of the present engine is limited; it is already highly energy efficient. The use of non-petroleum fuels, particularly the oil shale distillates, offers a greater potential. A coal-fired locomotive using any one of a number of engines appears to be the best alternative to the Diesel-electric locomotive with regard to life-cycle cost, fuel availability, and development risk. The adiabatic Diesel is the second-rated alternative with high thermal efficiency (up to 64%) as its greatest advantage. The risks associated with the development of the adiabatic Diesel, however, are higher than those for the coal-fired locomotive. The advantage of the third alternative, the fuel cell, is that it produces electricity directly from the fuel. At present, the only feasible fuel for a fuel cell locomotive is methanol.

Synthetic hydrocarbon fuels, probably derived from oil shale, will be needed if present Diesel-electric locomotives are used beyond 1995. Because synthetic hydrocarbon fuels are particularly suited to medium-speed Diesel engines, the first commercial application of these fuels may be by the railroad industry.

ACKNOWLEDGMENTS

The authors wish to thank the companies which have provided information reviewed the various phase reports, and helped us to understand some of the problems and challenges of the rail industry. Special thanks go to the Southern Railway, the Chessie System, and the Southern Pacific Transportation Co. which supplied much needed information about the way locomotives are used and their costs. General Motors, General Electric, Morrison-Knudsen, and Bombardier generously supplied technical data about their present locomotives and their experiences with alternative engines and fuels. Their help is gratefully acknowledged.

The support of Debbie Brown, Cindi Young, Diane Buhler, Blanche Washington and Marilyn Shaw in assembling the phase reports with their numerous changes is greatly appreciated

The support of our sponsor, Richard T. Alpaugh of the U.S. Department of Energy, has made this project possible and his efforts on our behalf have made our task much more personally satisfying.

The author especially thanks the following members of the Review Board and their companies for support throughout this study: Exxon Research and Engineering Co., E.N. Cart, Jr; California Institute of Technology, T. Caughey, R. Sabersky; General Electric Co., Transportation Business Div., J.G. Hoffman; General Motors Corp., Electro-Motive Division, N. Addie, A.B. Hamilton, J. Kotlin, E. Sjokvist, H. Williams; Southern Pacific Transportation Co., R.T. Gill, W.E. Thomford, R.J. Austill; Federal Railroad Administration, Dept. Of Transportation, R.E. Parsons, S. Dittmeyer; Association of American Railroads, Dr. C.P. Furber.

This work was performed by the Jet Propulsion Laboratory and was sponsored by the U.S. Department of Energy under Interagency Agreements EM-78-1-01-5151 and DE-A101-78C55151 through NASA Task RD 152, Amendment A189.

CONTENTS

INTRODUCTION 1

CRITERIA 2

DEISEL-ELECTRIC LOCOMOTIVE MODIFICATIONS 3

ADVANCED DIESEL ENGINES 6

ALTERNATIVE ENGINES 10

ALTERNATIVE FUELS 18

COAL COMBUSTION 23

LIFE-CYCLE COST ANALYSIS 24

SUGGESTIONS AND RECOMMENDATIONS 32

CONCLUSIONS 33

Figures

1. Advanced Diesel Base Power Plants 7

2. Steam Cycle for Coal-Fired Locomotive 13

3. Single Shaft, Regenerative Gas Turbine Engines 14

4. Stirling Engine Schematics 15

5. Conceptual Diagram of a Phosphoric Acid Fuel Cell 16

6. Predicted Fuel Prices to the Year 2000 26

Tables

1. Relative Ranking of Locomotive Modifications 6

2. Ranking of New Diesel Engines 10

3. Types of Engines 11

4. Ranking of Engines by Thermal Efficiency 17

5. Candidate Fuels for Diesel Engines 19

6. Slurry, Emulsion, and Blend Fuels 19

7. Functional Properties 20

8. Final Ranking of Fuels Relative to Diesel No. 2 21

9. Final Ranking of Fuel Slurries, Emulsions, and Blends Relative to Diesel No. 2 22

10. Comparison of Annualized Life-Cycle Costs Using JPL, DOE, and DRI Fuel Projections 27

11. Ranking of Fuels for Conventional Diesel Engines by Annualized Life-Cycle Costs 27

12. Ranking of Engines by Annualized Life-Cycle Costs 29

13. Fractions of the Annualized Life-Cycle Costs 31

INTRODUCTION

Presently, the American railroads ship over 35% of the freight in the United States. This service is second only to pipelines and barges in energy efficiency and serves a wide range of customers. With rapidly increasing transportation fuel costs, the railroads can become an even more important means of freight transportation. Because about 99% of their fleet consists of Diesel-electric locomotives, the railroads are dependent on the supply of Diesel No. 2 fuel. This fuel oil has changed from a relatively cheap and readily available commodity to one having an increasingly limited supply and higher cost. There has been, therefore, a growing interest in improving the fuel economy of locomotives and in finding alternative fuels for use in these same engines.

The objective of this project is, therefore, to assess ways of reducing the dependency of the railroads on petroleum fuels. To achieve this objective, the present state-of-the-art Diesel-electric locomotive and the most promising future engines, transmissions, and alternative fuels are identified, defined, and characterized. Comparisons are made between the current Diesel-electric system, improved Diesel-based systems, and new systems using other engines and power sources. These comparisons should identify the most promising improvements to the Diesel-based systems for short-range applications and the most promising successors, if any, to the Diesel in the longer term.

Because a railroad locomotive has a long service life, roughly 30 years, it will be a long time before any new concept can be incorporated into the fleet in significant numbers. In the short term, retrofit improvements are very important. Improvements can be made to the Diesel-electric locomotive which can decrease its fuel consumption by about 20%. Examples of potential improvements include combustion chamber and fuel system changes, bottoming cycles, improved accessories, turbocompounding, and the adiabatic Diesel engine. Another way to reduce the dependence on petroleum is using non-petroleum based fuels. Recent work in this area indicates that within certain limitations, the medium-speed Diesel engine is a multi-fuel engine. The limitations are that: (1) the cetane number should be above 30, (2) the viscosity should be low enough to prevent pumping problems, and (3) the lubricity should be high enough to maintain fuel system wear at an acceptable level. These limits can be met by a wide range of petroleum and non-petroleum fuels.

In the short term, it is desirable for locomotives to be modified for energy conservation and alternative fuels. In the long term, an assessment must be made as to whether the Diesel-electric is to remain the preferred system. Because of the high capital costs, electrification is attractive only for high traffic density lines. These lines form only a small percentage of the railroad routes in the United States. There is and will continue to be a need for locomotives that carry their own energy supply. Of the alternative engines, gas turbines have not proven particularly energy efficient. Improvements in ceramic components and heat exchangers,

however, may change this situation. Certainly, the multi-fuel capability of the gas turbine makes it an attractive candidate. The Stirling engine has the potential for good efficiency but also has significant heat transfer and manufacturing problems. Fuel cells are highly efficient energy conversion systems which produce dc power directly. The size, weight, and fuel requirements of fuel cells are the major concerns in their application for locomotives.

This railroad study was divided into three phases. The first phase established performance and cost methods and baseline data for typical present-day locomotives. The second phase was concerned with Diesel-electric locomotive system improvements and alternative fuels for Diesels. The third phase was devoted to new engine systems and life-cycle cost analyses. Each phase was about 7 months long with a separate informal report being issued.

The results of the various phases of the study were presented to the Review Board for discussion and comment. The Review Board was made up of representatives of locomotive manufacturers, fuel suppliers, operating railroads, universities, and government agencies. The meetings of the Review Board stimulated discussion and comments which have been incorporated into this final report.

CRITERIA

How were the various modifications, engines, and other options selected for study? The basic criterion was: does a proposed approach reduce the petroleum fuel dependency of the locomotive? This question can only be answered when taking a number of factors into consideration. The thermal efficiency of an engine is directly related to its fuel consumption. The availability of a fuel, under certain circumstances, becomes more important than efficiency. Cost is another important consideration which will always be present and frequently is a determining factor. Technical feasibility is as important as cost in many cases. For example, with some alternative fuels, the technical feasibility has been established and the projected costs are not excessive, but the current supply is inadequate and the long-term supply depends on the technical and cost feasibility of the manufacturing method. This is true of some of the synthetic fuels, particularly coal derived liquids.

In the alternative engine area, some proposed engines are designed more for increased power than for increased fuel efficiency. The other extreme is where improving the efficiency can result in an engine that is so large and heavy, or so complex that it is not practical for use on a locomotive. There are definite limits to the width, height, and weight of the locomotive. The criteria can be summed up as follows:

(1) System reliability.

(2) Petroleum savings.

(3) Technical feasibility.

(4) Favorable economics.

(5) Availability of the fuel supply.

(6) Safety.

Other considerations are:

(1) Width restrictions.

(2) Height limits.

(3) Total and per axle weight limits.

(4) Overall length.

(5) Maintenance.

(6) Logistics.

These last two items, maintenance and logistics, are more specifically railroad oriented. With any new engine or modification to an existing engine, there will be changes in maintenance procedures. As a general rule, any additional maintenance should be minimized. An improvement in fuel economy may require an increase in maintenance which must be within the capability of the railroad shops. For some alternative fuels, the logistics of supplying the fuel along the lines may be a deciding factor. The problems associated with the shipping, storage, and handling facilities for an exotic fuel may be enough to eliminate that fuel from consideration even if all other factors are favorable. The alternative fuels are competing with Diesel No. 2 and with each other and there are many factors involved, including site-specific ones. Similarly, alternative engines are competing with the Diesel engine and with other alternative engines.

DIESEL-ELECTRIC LOCOMOTIVE MODIFICATIONS

The present day locomotive Diesel engines are highly developed but there is some room for improvement in the combustion chamber, the valves, and the fuel injection system. These changes are more evolutionary than revolutionary in nature. Among the possible engine modifications examined are increased maximum cylinder pressures, increased turbocharger boost pressures, and reduced piston speeds. A possible three percentage point gain in thermal efficiency can come from increasing the maximum cylinder pressure to 3000 psia. The turbocharger boost pressure could then be increased as well. A four percentage point increase is possible if the boost pressure is increased to three atmospheres. A reduction in piston speed of 37% could result in a net improvement of one and one-half percentage points. If these three modifications were used together, the gain is eight percentage points in thermal efficiency. The loss of power because of reduced engine speed is countered by the increase resulting from the higher cylinder pressures. The engine would be heavier but about the same overall size as the present engine. These changes would require an extensive

engine redesign. There is no modification to existing engines that would have a significant effect on fuel consumption except the addition of exhaust heat recovery systems.

Approximately one-third of the energy in the fuel leaves the engine in the exhaust gas. One way of increasing the overall thermal efficiency of the engine system is to recover some fraction of this energy and turn it into useful work. Bottoming cycles are one means of recovering this energy and consist of three main types:

(1) Power generating cycles.

(2) Charge heating cycles.

(3) Fuel reforming cycles.

The power generating cycles convert exhaust energy into useful work through such options as turbocharging, Rankine engine compounding, and Stirling engine compounding. Turbocharging is already in use on many locomotive engines. R trofitting of turbochargers to existing non-turbocharged engines is possible and, in many cases, desirable. The type of service in which the locomotive is used and the mechanical problems with the engine itself must be considered. Line-haul locomotives would benefit from retrofitting but locomotives used for switching and short-line service are not good candidates for it.

Charge heating cycles use the engine exhaust energy to heat the air, the fuel, or the fuel-air charge, before or after compression. It was found that this type of bottoming cycle is not attractive for locomotive Diesel engine applications.

In fuel reforming cycles, the exhaust energy is used to convert a liquid fuel into a gas mixture that has a higher heating value than that of the original liquid fuel. Direct decomposition and steam reforming are the most attractive of these cycles. Each of these two cycles are suitable only for certain fuels. Direct decomposition is practical only for methanol. Methanol and ethanol can be steam reformed using the exhaust energy from conventional Diesel engines. Steam reforming of hydrocarbon fuels requires higher exhaust temperatures and is only marginally suitable for adiabatic Diesel engines. A variation of this type of cycle is the partial oxidation of the fuel with heat recovery from both the partial oxidation process and the engine exhaust.

The energy efficiency gains which can be achieved using bottoming cycles vary widely. In notch 8, turbocharging results in about a three-percentage-point improvement in thermal efficiency. Depending on the working fluid, the specific engine, and the space limitations, the Rankine bottoming cycle can improve the thermal efficiency by two to five percentage points. The Stirling bottoming cycle can be used only on an adiabatic Diesel engine and can result in a four- to five-percentage point gain.

The fuel reforming cycles are more complex than the power generating cycles. They affect both the engine inlet system and the exhaust system.

The gains in thermal efficiencies are also larger. The direct decomposition of methanol could result in an eight percentage point increase in thermal efficiency. The steam reforming of methanol will yield a five-percentage-point gain and the reforming of ethanol can have a nine-percentage-point gain in thermal efficiency. Partial oxidation reforming is limited to about four percentage points for all fuels. The direct decomposition of methanol is the simplest of the fuel reforming cycles and is nearly the most efficient one as well. The greatest disadvantage to the fuel reforming cycles is the limited number of suitable fuels.

In addition to the modifications of the engine, modifications to the rest of the powertrain must be considered. The auxiliary equipment, the transmission, and the dynamic braking system, all use engine power and affect the fuel consumption of the locomotive as a result.

The auxiliary power used for the equipment blowers, air compressors, radiator fans, and auxiliary generator on a typical 3000-hp locomotive ranges from about 25% of gross engine output in notch 1 to 6% in notch 8. The major items are the equipment blowers and the radiator fans that absorb about 215 hp in notch 8. Improved aerodynamics could reduce this figure by about 8% and the use of demand controls could reduce power by another 5 to 7%. The manufacturers have already made major improvements in this area in the last 3 years.

Present versions of dynamic braking require using the engine to provide power for fans and blowers during braking. The power generated in the dc motors is dissipated in resistor grids. Ideally, it should be possible to supply all of the power needed by the locomotive from the dynamic braking power. Unfortunately, this power is not always in a usable form. The voltage of the power from the motors varies with motor speed and does not match the needs of the blower motors. If the power could be conditioned using modern solid-state devices so that it could be used, then the engine could be operated at low idle during dynamic braking. The savings in fuel is estimated to amount to some 9000 gal per year for a typical 3000-hp locomotive.

The present electric transmission is efficient and there are no changes that could be made that will have a significant effect on fuel consumption. The relative merits of ac versus dc motors in the transmission have little effect on energy efficiency.

The various engine and locomotive modifications are ranked in Table 1. This ranking has many qualifiers attached. For example, the direct decomposition of methanol is a viable option only if methanol is a viable fuel. The Stirling compounded bottoming cycle can be used only with an adiabatic Diesel engine. These options are ranked not only on their efficiency gain but on their costs, complexity, maintenance requirements, and the range of engines to which the options could be applied.

Table 1. Relative Ranking of Diesel Locomotive Modifications

1.	Rankine compound bottoming cycle
2.	Direct decomposition of methanol
3.	Stirling compounded bottoming cycle
4.	Increased turbocharger boost pressure
5.	Increased maximum cylinder pressure
6.	Turbocharger retrofit
7.	Accessory power reduction
8.	Dynamic braking engine power reduction
9.	Reduced piston speed
10.	Partial oxidation fuel reforming
11.	Steam fuel reforming
12.	Electric transmission modifications
13.	Leaning out the air-fuel ratio

ADVANCED DIESEL ENGINES

The Diesel engine has been under development for nearly a century and has become an efficient prime mover. This engine, in turn, can be combined with other thermodynamic cycle engines to produce even more efficient systems. These combinations were initially discussed in connection with the bottoming cycles for use with conventional Diesel engines. Advanced Diesel engines are unconventional with multiple cycle engines that can achieve efficiencies well in excess of today's engines.

Turbocompounding an engine is using a turbine in the exhaust system to convert waste energy into power which is added to the crankshaft power. It is not a new concept; turbocompounded spark ignition aircraft engines were built in the 1940s. Turbocompounded truck Diesel engines are currently under development. There are no known instances of its use on locomotive Diesel engines.

A series of Diesel engine changes are shown in Figure 1. Figure 1-a shows a truck or industrial Diesel engine rated at 500 hp, but is equally applicable to four-stroke locomotive Diesel engines as well. The turbocompounded version of this engine shown in Figure 1-b has a rated output power of 581 hp, 16% greater than the base engine rating of 500 hp. More important, the BSFC (brake specific fuel consumption) of the turbocompounded engine is nearly 9% less. Alternately, the thermal efficiency of the engine is three percentage points higher.

Because most of the methods proposed to improve the thermal efficiency of the engine system depend on the use of exhaust gas energy, is logical to try to divert the cooling system heat into the exhaust system. The adiabatic Diesel engine is shown in Figure 1-c. Instead of a cooling jacket, the cylinder is insulated to prevent heat from flowing away from the combustion chamber. Similarly, the cylinder head, valves, and piston crown are insulated. In this configuration, the amount of heat lost to cooling is reduced 13 percentage points to only 17% of the total input

ORIGINAL PAGE IS
OF POOR QUALITY

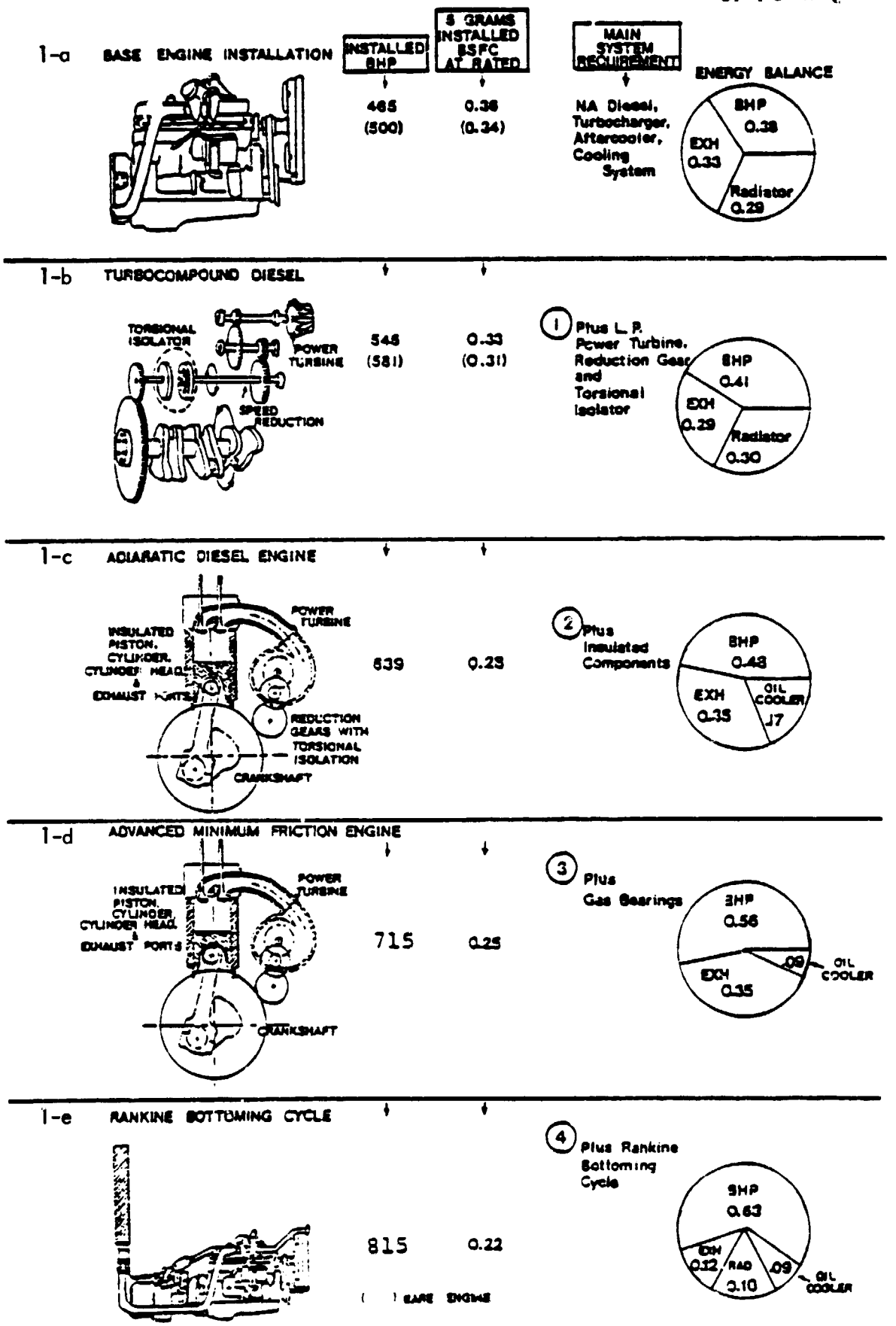

Figure 1(a-e). Advanced Diesel Base Power Plants

energy. The exhaust gases contain about 42% of the total heat and the exhaust gas temperature has increased by 400°F. The high energy content of the exhaust gas suggests that more than one heat recovery system could be used. The adiabatic Diesel shown in Figure 1-c has two heat recovery systems, turbocharging and turbocompounding. The last system on this figure, Figure 1-e, "Rankine Bottoming Cycle" uses three; the Rankine bottoming cycle, turbocompounding, and turbocharging. The additional heat recovery systems have a marked effect on BSFC and on thermal efficiency. The adiabatic Diesel engine has a thermal efficiency seven percentage points higher than the turbocompound engine and 10 percentage points higher than the base engine.

The walls of an adiabatic engine are very hot. On test engines, they are red hot. As a result, the materials and lubricants used in this engine must be able to withstand the high temperatures and the stresses imposed by Diesel engine operation. Ceramics are, therefore, an integral part of the adiabatic engine design because no other class of materials will stand up to the high temperatures. Designing reliable engine components with ceramics, however, is considerably more difficult than designing them with metallic materials. The failure mode of metallic parts is usually quite predictable but the mode of failure for ceramic parts is less predictable. Thus, to avoid failures, ceramic parts should be stressed low and their quality control be kept high. Some of the ceramics that could be used are:

(1) Hot pressed silicon nitride.

(2) Sintered silicon nitride.

(3) Reaction bonded silicon nitride.

(4) Lithium aluminum silicate.

(5) Aluminum silicate.

(6) Silicon carbide.

The lack of high temperature lubricants is a major problem in developing the adiabatic Diesel engine. There are solutions available, however. One solution is to eliminate lubricants entirely. The minimum friction engine uses this approach. Gas bearings are used in the piston-cylinder liner interface and ceramic roller bearings for the wrist pins, crank pins, and main crankshaft bearings. Solid lubricants would be used for gears, valve guides, rocker arms, and push rod assemblies. One version of the minimum friction engine is shown in Figure 1-d. This version uses only the gas bearing at the piston-cylinder liner interface and uses a conventional oil system for the remaining bearings. As a result, 9% of the input energy goes to the oil cooler. The engine power in this case has increased from 500 hp to 715 hp and the BSFC has dropped to 0.25 lb/hp-hr. The thermal efficiency is 55%, 16 percentage points better than the base engine.

The addition of a Rankine bottoming cycle to the fourth configuration results in an output power rating of 815 hp and a BSFC of 0.22 lb/hp-hr. hp-hr corresponding to a thermal efficiency of 63%. The exhaust gas from this engine system contains only 12% of the input heat. Approximately one-third of the heat wasted by the base engine has been recovered in this engine to produce useful energy.

The gains in efficiency are as impressive as the problems of developing the engine. The ceramic parts needed are larger than any yet made from these materials. A better understanding of the failure modes of ceramics is needed. The reliability of ceramic parts in this kind of application must be established. The savings in fuel, and in fuel costs, possible with the adiabatic engine provides a strong motivating force to solve these problems.

Several unconventional Diesel engines that are not adiabatic Diesels were investigated including the augmented Diesel, the Hyperbar Diesel, and the regenerated Diesel. The augmented Diesel engine is a turbocharged, turbocompounded Diesel engine with a gas turbine type combustor upstream of the power turbine. By controlling the fuel flow to the combustor, an additional 200 to 400 hp could be produced but, the BSFC would be markedly higher. The use of a Rankine bottoming cycle would lower the BSFC but does not result in an engine significantly more efficient than the base Diesel engine.

The Hyperbar Diesel engine is another engine that uses an auxiliary combustor in the exhaust system. It differs from the augmented Diesel engine in that the combustor is upstream of the turbocharger turbine rather than the power or turbocompounding turbine. The turbocharger in the Hyperbar engine has a 10 atmosphere boost rather than the 2 to 3 typical of conventional Diesels. The losses in the system balance the gains in efficiency so that the BSFC and thermal efficiency are nearly equal for a conventional and a Hyperbar engine. The Hyperbar engine, however, would be considerably smaller and lighter.

One unusual engine which does show possible fuel savings is the regenerative Diesel engine. In this engine, part of the engine exhaust energy is transferred to the compressed air before the injection of the fuel. There is a gain in thermal efficiency of about three percentage points but the mechanical complexity plus the additional losses of heat and pressure make the engine impractical.

The various advanced Diesel engines are ranked in Table 2 by their thermal efficiency. The last two are considered to have a zero gain in thermal efficiency. They could have a decrease under certain conditions. The adiabatic Diesel engines show the greatest potential for increased thermal efficiency. Not shown in this table are the partial adiabatic engines which use a combination of ceramic and cooled metallic components. They may be thought of as intermediate steps in the development of an adiabatic Diesel engine but they are practical engines in their own right. It may not be possible to build fully adiabatic engines with the size necessary for a locomotive but a partial adiabatic could still provide a substantial gain in thermal efficiency.

Table 2. Rankings of the New Diesel Engines

1. Adiabatic turbocompound Diesel engine with minimum friction and rankine bottoming cycle
2. Adiabatic turbocompound Diesel engine with rankine bottoming cycle
3. Adiabatic Diesel engine with Stirling bottoming cycle
4. Adiabatic turbocompound Diesel engine with minimum friction
5. Turbocompounded water-cooled Diesel engine
6. Turbocharged water-cooled Diesel engine
7. Regenerated Diesel engine
8. Augmented Diesel engine
9. Hyperbar Diesel engine

The "mature" or "ideal" Diesel engines are also not included in Table 2. These engines are not really practical engines but were conceived to determine the thermal efficiency limits of Diesel engines. One engine is based on a water-cooled engine of essentially conventional design using the various modifications investigated in this study. The maximum thermal efficiency is about 48%, or about eight percentage points more than present engines. The other engine is based on a fully adiabatic engine with all of the modifications, bottoming cycles, and other locomotive changes. The maximum thermal efficiency in this case is 64%, 24 percentage points above today's Diesel engines.

The Diesel engine is capable of much higher thermal efficiencies than present engines if multiple cycle systems are used. A well-developed adiabatic Diesel with two or three stages of exhaust heat recovery will probably be the most efficient heat engine possible. However, the complexity of this engine system must be considered along with the fuel and cost savings.

ALTERNATIVE ENGINES

The Diesel engine is not the only engine that can be used in locomotives. Over the last century and a half, reciprocating steam engines, steam turbines, and gas turbines have all been used. If the railroads' dependency on Diesel No. 2 fuel is to be reduced, it is necessary to examine engines other than the Diesel.

In the realm of alternative engines the principal candidates are gas turbines, steam engines, Stirling engines, and fuel cells. There are numerous variations of these generic engine types. No attempt has been made to explore all of the possible engines but rather to determine the relative merits of the various generic types.

Table 3 lists the principal engine types and the specific versions examined in this study. For this study, the fuel cells are considered engines although, they operate on principles quite different from the

Table 3. Types of Engines

Diesel engines
Conventional with exhaust heat recovery
Modified conventional
Partial adiabatic
Full adiabatic
Full adiabatic
Adiabatic with exhaust heat recovery
Steam engines
Reciprocating drive
Steam turbine-electric
Gas turbines
Open cycle, internal combustion
Open cycle, external combustion
Closed cycle, external combustion
Reacting gas, external combustion
Stirling engines
Liquid fueled
Solid fueled
Otto cycle
Stratified charge rotary
Naval Academy Heat Balance engine
Other
Fuel-cell
Sodium heat engine

other engines. The sodium heat engine, also known as the alkaline metal thermal energy converter, operates on principles different from either the fuel cells or the other engines.

The steam engines or Rankine cycle engines were used for nearly a century and a half by the railroads until they were replaced by the Diesel-electric locomotives. A new steam engine would bear little resemblance to the old engines except that the working fluid in the engine is steam. The biggest change will be in the coal combustion system. The old locomotives at full power could lose half of the coal, unburned, up the stack. The combustion efficiency of a new combustion system would be 90 to 95% in notch 8. To be compatible with existing Diesel engines, the controls of a

new steam engine would be by notches rather than the old throttle lever which was continuously variable. Both steam turbines and steam pistons could be used. Each type has its advantages and the type of service in which the locomotive is used is important.

The basic system used by Rankine cycle steam engines is shown in Figure 2, regardless of whether it is a turbine or a piston engine. With new advances in cylinder lubrication and ring materials, the efficiency of the piston engine is approaching that of the turbine at full load and may be better at part load. The system efficiency of these engines will be, at least 13%, and may be as high as 25%.

The gas turbine was used before by the railroads. These old gas turbines were simple cycle, internal combustion engines and had a number of problems, including blade erosion and high fuel consumption. Any new gas turbine should be regenerated. That is, exhaust energy should be used to heat the compressor outlet air, and if coal is used, it would have to be externally fired.

Three types of regenerative gas turbines were examined for use in a locomotive; internal combustion open cycle, external combustion open cycle, and external combustion closed cycle. These three engines are shown schematically in Figure 3. The internal combustion open cycle engine is dependent on liquid or gaseous fuels and because its thermal efficiency is not expected to be as good as that of a Diesel engine, it is not the recommended choice. The external combustion gas turbines can use a wide variety of fuels such as coal, wood, and crude oil as well as other liquid and gaseous fuels. At this time, the closed cycle gas turbine is more attractive than the open cycle.

The Stirling engine has the potential to be more efficient than the Diesel engine. As yet, this potential has not been demonstrated. The Stirling engine is a much more complex engine, both mechanically and thermodynamically, than the Diesel or the other alternative engines examined. In the Stirling, the working fluid is moved between cylinders as shown in Figure 4 or between the top and bottom of the same cylinder. Because it is an external combustion engine, the Stirling can use the wide range of fuels typical of such engines. This fact, coupled with its high thermal efficiency potential makes it a very attractive engine. At present, however, no Stirling engine exists in the size needed for a locomotive. There is a U.S. Department of Energy program at Los Alamos to develop large Stirling engines for stationary power generation applications and this effort may make the Stirling locomotive practical. The problems involved in the development of the engine are formidable and the engine cannot be expected to be in production before the mid 1990s.

Fuel cells are also attractive for locomotive applications in the middle to late 1990s and beyond. They combine high efficiency (50% and above) with simplicity of operation. The fuel is converted into electricity without all the moving parts typical of the Diesel-electric locomotives. The process by which this is accomplished is shown in Figure 5.

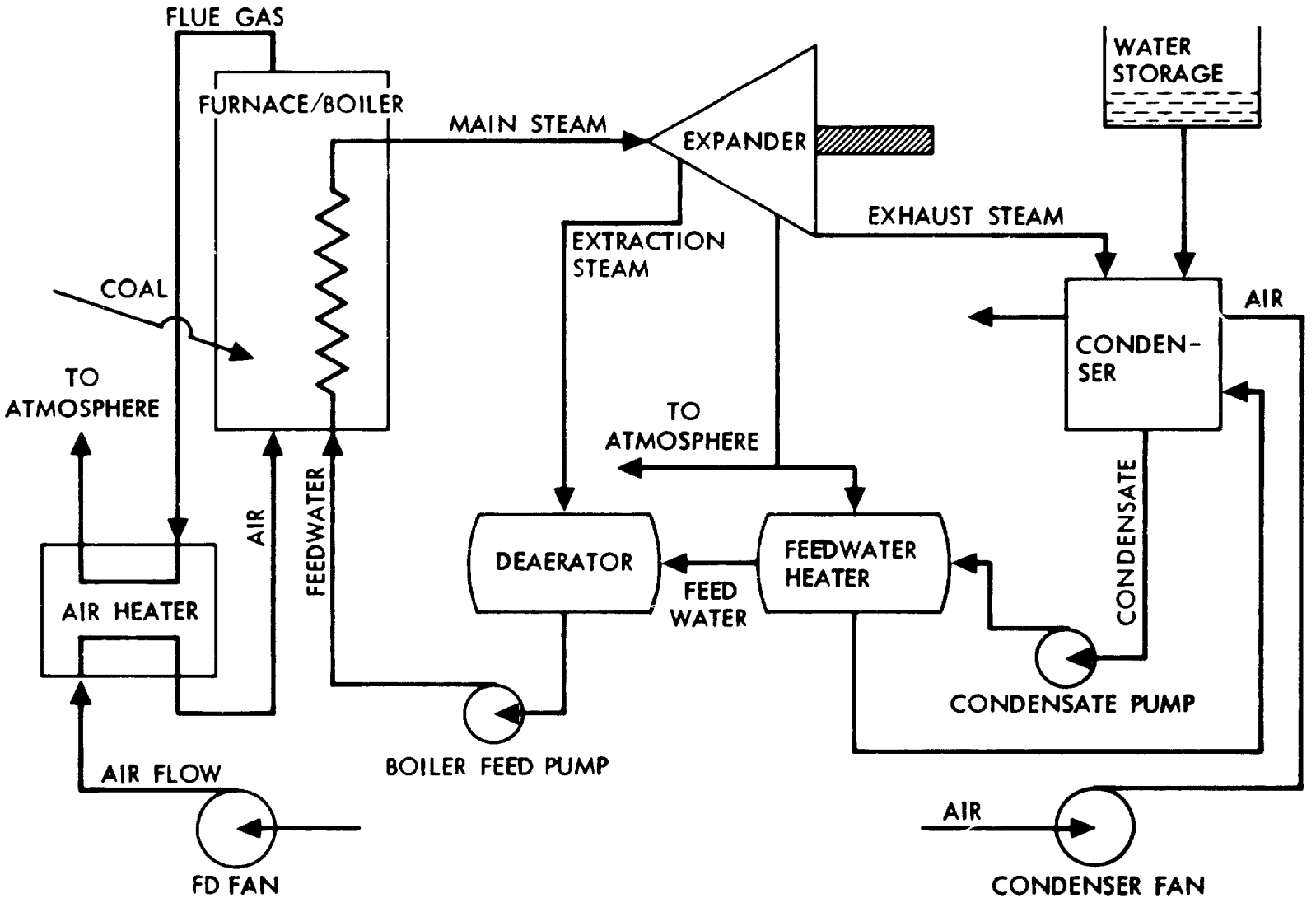

Figure 2. Steam Cycle for Coal-Fired Locomotive

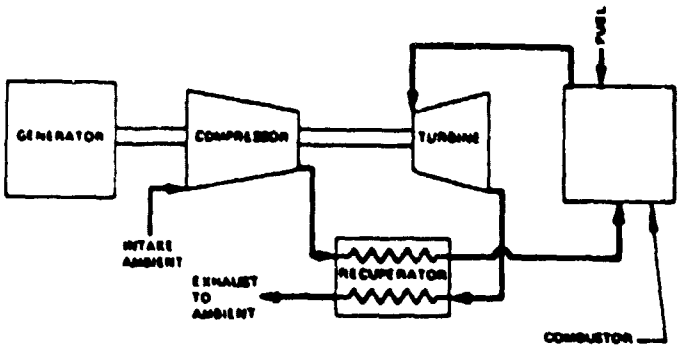

INTERNALLY FIRED OPEN CYCLE GAS TURBINE

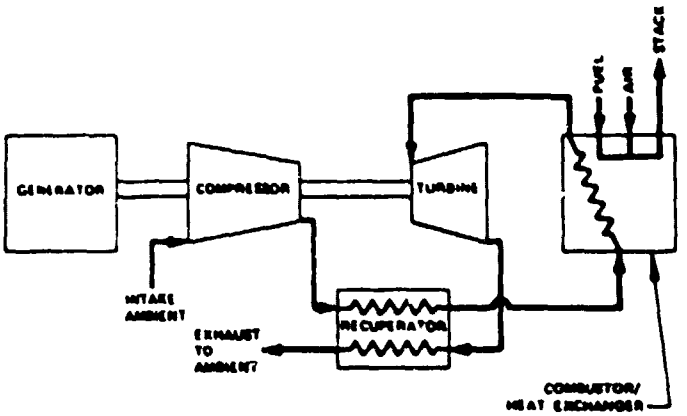

EXTERNALLY FIRED OPEN CYCLE GAS TURBINE

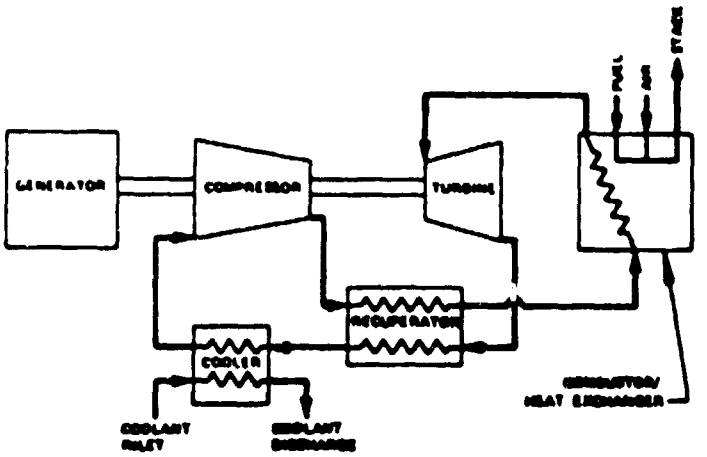

CLOSED CYCLE GAS TURBINE

Figure 3. Single Shaft, Regenerative Gas Turbine Engines

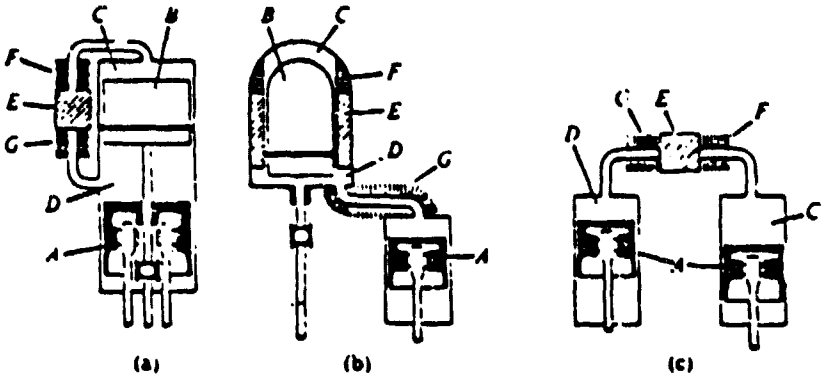

Types of Single Acting Engine Arrangements

(a) Piston-displacer, in the same cylinder
(b) Piston-displacer, in separate cylinders
(c) Two-piston machine

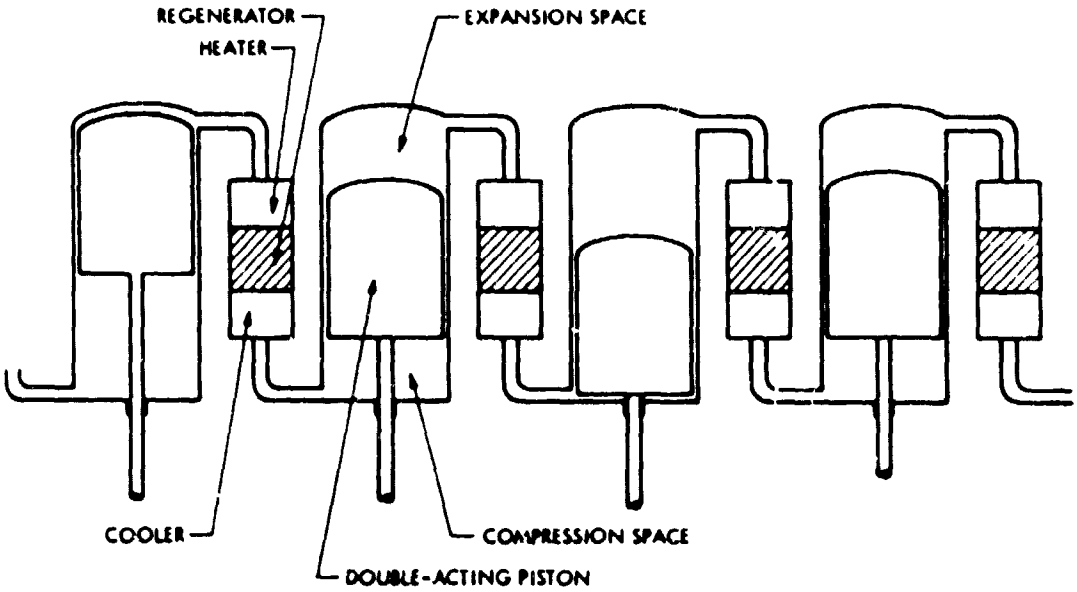

Schematic Representation of a Double Acting, Four-Cylinder Stirling Engine

Figure 4. Stirling Engine Schematics

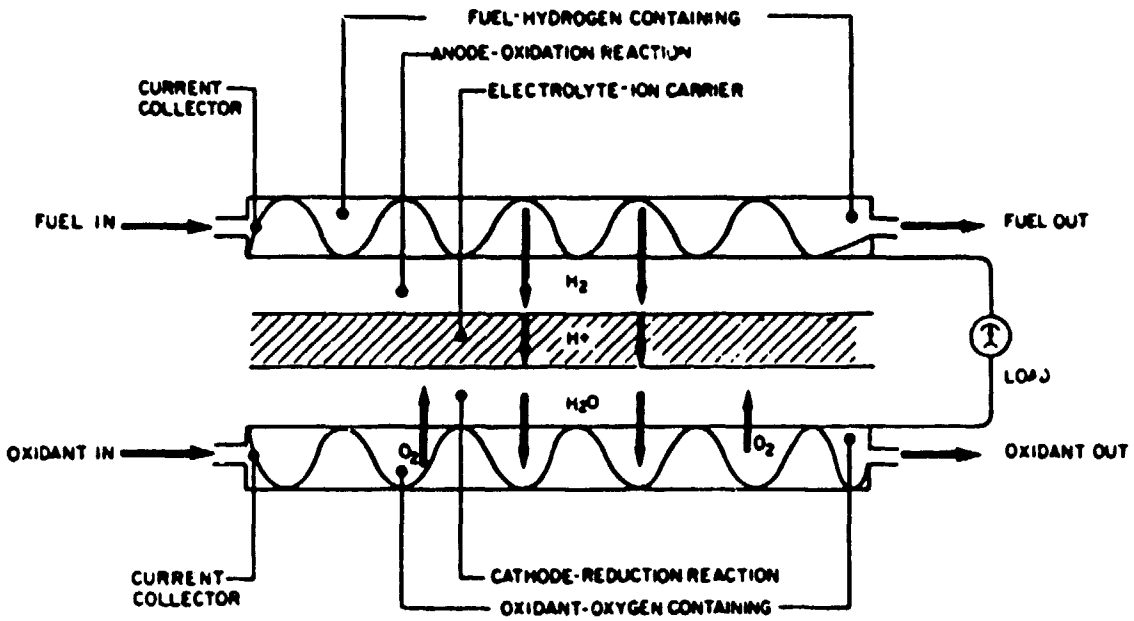

Figure 5. Conceptual Diagram of a Phosphoric Acid Fuel Cell

At present, the only fuel cell sufficiently developed to be seriously considered is the phosphoric acid cell. The only fuel which is attractive for this application is methanol decomposed into a hydrogen-rich gas. This dependence on a single fuel is one of the primary disadvantages of the fuel cell. Experience with the New York City and the Tokyo fuel cell installations for utilities may have a strong influence on the future of fuel cell locomotives.

There were a number of other types of engines examined in the study and an even larger number that received cursory examination. It was not practical to examine in detail more than a small fraction of the possible engine systems. Four which received some attention because of their unusual nature are the Naval Academy Heat Balance engine, the stratified charge rotary engine, the reacting gas Brayton cycle engine, and the sodium heat engine. More than anything, they demonstrate the wide range of possible alternative engines and may indicate the direction of future engine research.

The thermal efficiencies of 18 different engines are shown in Table 4. The engines include Diesel engines with various modifications, advanced Diesels, and the alternative engines. The efficiencies range from 20 to 64%. These efficiencies are for the engine alone in notch 8. System efficiencies (fuel to rail) involve the effects of auxiliary equipment and powertrain efficiency, and are typically about two-thirds of these values. Average system efficiency involves the part load characteristics of the engines and the duty cycle of the locomotives. Average system efficiency values are about half of the figures in Table 4 but vary markedly from engine to engine.

Table 4. Ranking of Engines by Thermal Efficiency

	Engine	Notch 8 Thermal Efficiency, %
1.	Long term "mature" adiabatic Diesel engine	64
2.	Adiabatic turbocompound Diesel engine with minimum friction and Rankine bottoming cycle	59
3.	Adiabatic turbocompound Diesel with Rankine bottoming cycle	54
4.	Adiabatic turbocompound Diesel with minimum friction	52
5.	Adiabatic Diesel with Stirling engine bottoming cycle	51
6.	Short term "mature" conventional Diesel engine	50
7.	Phosphoric acid fuel cell using methanol	49 (46)[b]
8.	Conventional Diesel fueled by directly decomposed methanol	47
9.	Advanced Stirling engine using liquid fuels	46
10.	Conventional Diesel with Rankine compound bottoming cycle	45
11.	Open cycle, internal combustion regenerative gas turbine	42
12.	Closed cycle, external combustion regenerative gas turbine[a]	40
13.	Present Diesel engine	40
14.	Open cycle, external combustion regenerative gas turbine[a]	39
15.	Advanced Stirling engine using a fluidized bed combustor	39
16.	Advanced stratified charge rotary combustion engine	35
17.	Second generation new steam engine	28
18.	First generation new steam engine	20(17)[c]

Notes:
[a] Efficiency based on shaft power to alternator using ceramic heat exchanger in fluidized bed, turbine inlet temperature is 2250 °F.
[b] Efficiency based on dc output rather than shaft power. Equivalent shaft efficiency will be 49%.
[c] Efficiency based on cylinder output to wheels, equivalent shaft efficiency will be 20%.

If liquid fuels are available, the Diesel and advanced Diesel engines are the best choices for the remainder of this century. Beyond that, the Stirling and fuel cells may be used. The use of coal requires an external combustion engine and, in this case, the gas turbine and steam engines are the likely choices with the Stirling engine as another possibility.

ALTERNATIVE FUELS

A different approach to reducing the dependency of the railroads on petroleum-based Diesel No. 2 fuel is the use of non-petroleum fuels and petroleum fuels other than Diesel No. 2. These alternative fuels may be alcohols, coal and liquid fuels derived from coal, oil shale derived hydrocarbon fuels, vegetable oils, and inorganic fuels such as hydrogen. In addition, there are the blends, slurries, and emulsions that can be made from these fuels and from petroleum-based fuels. The number of candidate fuels is over 30 and there are a large number of blends, slurries, and emulsions. The total number of possible fuels is in excess of 100.

Alternative fuels have been used by the railroads in the past. Wood and coal were used by steam locomotives for well over 100 years. Several railroads, including Southern Pacific and Union Pacific, have used residual oils in Diesel engines at various times.

A list of candidate fuels for use as straight fuels is presented in Table 5. These fuels are divided into groups based on their source except for the alcohols and for hydrogen and ammonia. The emulsions, solutions, slurries, and blends listed in Table 6 can be used in addition to the straight fuels.

The use of an alternative fuel in an engine affects more than just the engine itself. The storage of the fuel on the locomotive and at a refueling terminal must be considered. Safety hazards, toxicity and material compatibility are as important as viscosity and heating value. Because of the wide range of fuels to be evaluated, a suitable method of comparison had to be devised. The method that was implemented is based on the concept of functional properties rather than the physical and chemical properties normally used. Functional properties are defined as properties of the fuel that are related to engine, locomotive, or railroad system functions. These properties are not rated on an absolute basis, but on a relative basis. Because locomotives now use Diesel No. 2 in a Diesel engine, it is important to know how each of the alternative fuels compare to this fuel.

For each combination of a fuel and a functional property, a relative value is determined by comparing it to Diesel No. 2. This value is then multiplied by the weighing factor of the particular functional property to get an individual score. The individual scores are totalled to get the final score for the fuel. The ranking of the fuels is based on these final scores which have no other significance than as a means of ranking.

Table 5. Candidate Fuels for Diesel Engines

Petroleum	Coal	Alcohols
Diesel No. 2	Powdered coal	Methanol
Gasoline	Coal derived gasoline	Ethanol
Light distillate	Coal derived distillate	
Naphtha	Solvent refined coal	**Vegetable Oils**
Lube stock		
Broadcut fuel oil	**Oil Shale**	Cottonseed oil
Jet A		Corn oil
Kerosene	Oil shale distillate	Peanut oil
Methane	Oil shale gasoline	Olive
Butane		
Propane	**Inorganic**	**Tar Sands**
No. 4 fuel oil		
No. 5 fuel oil	Hydrogen	Syn-crude
No. 6 fuel oil	Ammonia	

Table 6. Slurry, Emulsion and Blend Fuels

Slurry fuels	Petroleum Blend Fuels
Coal in Diesel fuel	Gasoline in lube oil
Carbon black in Diesel fuel	Heavy aromatic naphtha in Diesel fuel
Petroleum coke in Diesel fuel	Gasoline in Diesel fuel
Flour in Diesel fuel	
Cornstarch in Diesel fuel	
Wood Fibers in Diesel fuel	
Coal in water	

Emulsion Fuels

Water in Diesel fuel
Methanol in Diesel fuel
Ethanol in Diesel fuel

The 22 functional properties used in this study are listed in Table 7. This list is applicable for all types of fuels and engines. For example, ignitability is related to cetane no. in a Diesel engine, and has little significance in a gas turbine engine. The weighing factor used for each functional property would vary with the type of engine system. The properties are divided into four main categories depending on whether they affect combustion, engine operation, logistics and storage, or maintenance and safety.

The rankings of the 41 fuels, slurries, emulsions and blends for application in Diesel engines are shown in Tables 8 and 9. Similar tables have been generated for other engines. The rankings of the 18 slurries, emulsions, and blends are separate from the straight fuels. The highest ranked fuel in Table 8 is the petroleum based broadcut fuel oil. The second highest ranked fuel and the highest ranked non-petroleum fuel is oil shale distillate. The lowest ranked of the straight fuels is ammonia. In general, the emulsions, slurries, and blends have scores well below many of the straight fuels. For example, the highest ranking slurry, 20% coal in Diesel No. 2, has a score of -13 which corresponds to tenth place in the straight fuels list.

Not all of the fuels investigated are suitable as long-term replacements. Three basic ways to use these fuels are as emergency, extender, and replacement fuels. Emergency fuels are intended for short term usage in the absence of the regular fuel. In choosing emergency fuels, there should be little or no engine or locomotive modifications required. Generally, proper blending of the fuel will eliminate any need for modification. Blends of petroleum products, synthetic hydrocarbons and alcohols are well suited to use as emergency fuels. Increased maintenance may be

Table 7. Functional Properties

Combustion Related Properties	Engine Operation
Ignitability	Energy density
Flame speed	Pumpability
Power density	Boiling point
Combustion rate	Pour point
Smoke	Vaporization
	Lubricity

Logistics and Storage	Maintenance and Safety
Future cost	Special equipment
Future availability	Compatibility
Water reactivity	Lubricant reactivity
Tank volume	Toxicity
Special tankage	Fire hazard
Stability	

Table 8. Final Ranking of Fuels Relative to Diesel No. 2

Fuel	Combustion	Engine Operation	Logistics and Storage	Maintenance and Safety	Total Score	Final Rank
Gasoline	-13	-1	0	-14	-28	12
Naphtha	-6	+4	+3	-2	-1	6
Light distillate	0	+4	+3	0	7	2
Lube stock	-26	+9	-3	+2	-18	11
Broadcut fuel oil	0	0	+15	-2	13	1
Jet A	0	0	+3	-2	1	5
Kerosene	0	+3	+3	-2	4	3
Methane	-1	-14	-7	-15	-37	15
Butane	+3	-6	+4	-15	-14	9
Propane	+5	-6	+4	-15	-12	8
No. 4 fuel oil	-11	-2	-3	0	-16	10
No. 5 fuel oil	-33	-13	-3	-5	-54	16
No. 6 fuel oil	-44	-11	0	0	-55	17
Methanol	-14	-20	-4	-26	-64	18
Ethanol	-14	-20	-12	-19	-65	19
Powdered Coal	-60	-34	+44	-21	-71	20
Coal derived distillate	-11	-3	+13	0	-1	6
Coal derived gasoline	-12	-4	-5	-10	-31	13
Oil shale distillate	-11	-3	+20	-2	+4	3
Oil shale gasoline	-12	-4	-5	-10	-31	13
Hydrogen	-10	-41	-13	-39	-103	22
Ammonia	-17	-41	-27	-38	-123	23
Cottonseed oil	-37	-11	-51	+14	-85	21

Table 9. Final Ranking of Fuel Slurries, Emulsions, and Blends Relative to Diesel No. 2

Fuel	Combustion	Engine Operation	Logistics and Storage	Maintenance and Safety	Total Score	Final Rank
Diesel fuel Slurries						
20% Carbon black	-22	-15	-6	0	-43	17
20% Petroleum coke	-11	-9	-3	0	-23	10
20% Flour	-6	-14	-12	0	-32	13
20% Cornstarch	-6	-14	-12	0	-32	13
20% Wood fibers	-11	-19	-6	0	-36	15
20% Coal	-16	-1	+4	-6	-19	6
Diesel Fuel Emulsions						
10% Water-6% emulsifier	-6	-3	+3	-4	-10	2
30% Water-10% emulsifier	-9	-15	+7	-4	-19	6
10% Methanol-30% surfactant	-12	0	-12	0	-24	12
30% Metahnol-30% surfactant	-7	-13	-22	-11	-53	18
10% Ethanol-4% surfactant	-12	0	-9	0	-21	8
30% Ethanol-12% surfactant	-7	-13	-19	-2	-41	16
Petroleum Blends						
30% Gasoline in lube oil	-10	-1	0	0	-11	3
70% Gasoline in lube oil	-11	-10	0	-2	-23	10
64% Heavy aromatic naphtha in Diesel	-12	0	0	0	-12	4
35% Heavy aromatic naphtha in Diesel	-12	0	0	0	-12	4
50% Gasoline in Diesel No. 2	0	-5	0	-2	-7	1
80% No. 6 fuel oil in Diesel No. 2	-16	-6	0	0	-22	9

necessary with these fuels and their long-term use is not usually recommended.

An extender fuel stretches the supply of Diesel No. 2 when it is inadequate. In general, the use of extenders may be either long- or short-term. One requirement of an extender fuel is that it can be mixed with Diesel No. 2 and that a stable mixture results. In some cases, such as methanol, an emulsifier is required.

Because extenders are used for a longer period of time than emergency fuels, the requirements for engine compatibility are greater but more extensive engine modifications are permitted. The changeover from Diesel No. 2 to a replacement fuel can be facilitated if the replacement fuel can first be used as an extender. The fraction of the replacement fuel can be gradually increased until it becomes the only fuel.

A replacement fuel totally replaces Diesel No. 2 either by taking its place in a Diesel engine or by its use in an alternative engine. Coal used in an external combustion engine is one such fuel. As a replacement fuel in Diesel engines, oil shale distillate is the most attractive of the non-petroleum fuels. No modifications to the engine or locomotive are required. It is well suited to the medium speed Diesel engine and the prospects for an adequate supply at a competitive price looks good for the year 1995.

For non-Diesel engines, coal is the best fuel when used in an external combustion engine system. The supply is ample and stable. Its cost is expected to remain well below that of petroleum or synthetic hydrocarbon fuels in the foreseeable future. The technology of coal combustion has improved in the last 10 years to a point where it now appears feasible to build a clean, efficient coal-fired locomotive.

In the future, railroads will probably use more than one fuel in their fleet of locomotives. The use of one fuel in the past was convenient and economical, but now, economics and supply problems dictate a multi-fuel future.

COAL COMBUSTION

Coal is probably the most attractive of the alternative fuels from the cost and availability standpoint. The biggest drawback to its use is that it is a difficult fuel to burn cleanly and efficiently. The biggest problem facing the coal-fired locomotive is the development of a combustion system that will burn the coal in an efficient and environmentally acceptable manner and that will fit into a locomotive.

There are a wide variety of ways to burn coal. These can be grouped into four main classes: direct open-chamber, direct in-bed, gasification, and liquefaction. Direct open-chamber combustion burns coal by the injection of powdered coal or by the use of a grate. Direct in-bed combustion is the complete burning of the coal in a bed of some other material. The bed may be a fixed bed or a fluidized bed and the bed material may be

either inert or one that reacts with a combustion product. Coal gasification is an indirect combustion system. The reactions are in two main steps: (1) the production of the coal gas, and (2) the combustion of the gas with air. The two reactions are separated in both time and space. Liquefaction is a similar process except that the intermediate product is a liquid rather than a gas. The coal liquid is not likely to be consumed immediately and may, in fact, be further processed before it is used.

Of these four classes, only the direct in-bed and the gasification types are likely to be used on a locomotive in which raw coal is carried as the fuel. Coal gasification was used in the steam engine with reciprocating drive and a direct in-bed system in the form of a boiling fluidized bed for the steam turbine-electric locomotive. It was also used for the external combustion gas turbine and one of the Stirling engines.

Both the fluidized bed and the gasification combustors exist in more than one form. There are at least seven different fluidized bed combustors and at least ten coal gasifier systems. Which ones are best suited for use in a locomotive will require a much more detailed analysis than is possible in this study. It is also possible that more than one system is suitable for this application.

LIFE-CYCLE COST ANALYSIS

Many of the new engines are technically feasible for use in line haul locomotives. Many of the fuels are also technically feasible for use in these engines. The economic feasibility of both the engines and the fuels, however, must be considered. The relative economic merits of these engines and fuels have been ranked in terms of their life-cycle costs which include capital, fuel, maintenance, and operational costs.

The detailed method of calculation used in this analysis is based on a costing methodology developed by the Jet Propulsion Laboratory and documented in The Cost of Energy from Utility-Owned Solar Electric Systems, JPL Report ERDA/JPL-1012-76/3, June 1976. Although this model was originally developed for utility applications, it is actually much more general. By using financial data from cooperating railroads and from the open literature, the model provides a present value lifecycle cost consistent with the accepted practices of engineering economics.

The life-cycle cost of a specific locomotive represents the present value of all of the cost incurred in purchasing and operating a locomotive, including a normal rate of return on equity. More specifically, the calculation implies that all capital, operations, maintenance, and fuel costs have been accounted for. Factors such as taxes, depreciation schedules, rates of inflation, and system service life are also considered. All of the individual must costs for all of the locomotives must be as consistent as possible.

The fundamental equation of the annualized life-cycle cost methodology is:

$$\underline{AC} = FCR \times CI_{pv} + CRF_{k,N} (OP_{pv} + MNT_{pv} + FL_{pv})$$

The terms are defined as:

$\underline{AC}$ = Levelized annual life-cycle cost

FCR = Fixed charge rate

CI_{pv} = Present value of all capital investments

$CRF_{k,N}$ = Capital recovery factor based on capital cost k and service life N

OP_{pv} = Present value of operating costs

MNT_{pv} = Present value of maintenance costs

FL_{pv} = Present value of fuel costs

To have consistent cost figures for all of the cost areas, it is necessary to have a single cost reference. For this study, it is the Wholesale Price Index. Values of the index for the past 20 years were used to predict values for the next 20 years. From these values and historical data, cost correlations in terms of constant dollars were established and cost predictions for specific fuels, maintenance, and other parameters were computed. These predictions were then modified depending on whether the particular cost was expected to increase in cost at a lower rate than inflation, at the same rate, or at a higher rate. Once all of the costs were calculated, they were combined to compute the annualized life-cycle cost for each engine-fuel combination being considered. Eighteen fuels and 18 engines were used for the final evaluation.

In addition to the fuel price predictions developed at JPL, predictions made by the U.S. Department of Energy and Data Resources, Inc. were also used for comparison. These predictions were much more limited, using only distillate fuel and coal. The predictions of cost versus time for the two fuels and the three models are shown in Figure 6. The life-cycle costs using these three models are shown in Table 10. Although there are considerable differences between the predicted fuel prices, the life-cycle costs are reasonably close. The ratio of the life-cycle cost of the Diesel locomotive to that of the coal-fired gas turbine locomotive for the three models are very close, with only a 6% difference between the high and low values. The life-cycle cost is not overly sensitive to the details of the fuel price predictions. The other cost areas also show a similar insensitivity. The absolute dollar values will vary widely, but the ratio of the life-cycle costs for any two locomotives or fuels, tends to be nearly constant.

Table 11 shows the life-cycle costs for 15 fuels used in a conventional present day Diesel engine modified as necessary to use the specific fuel.

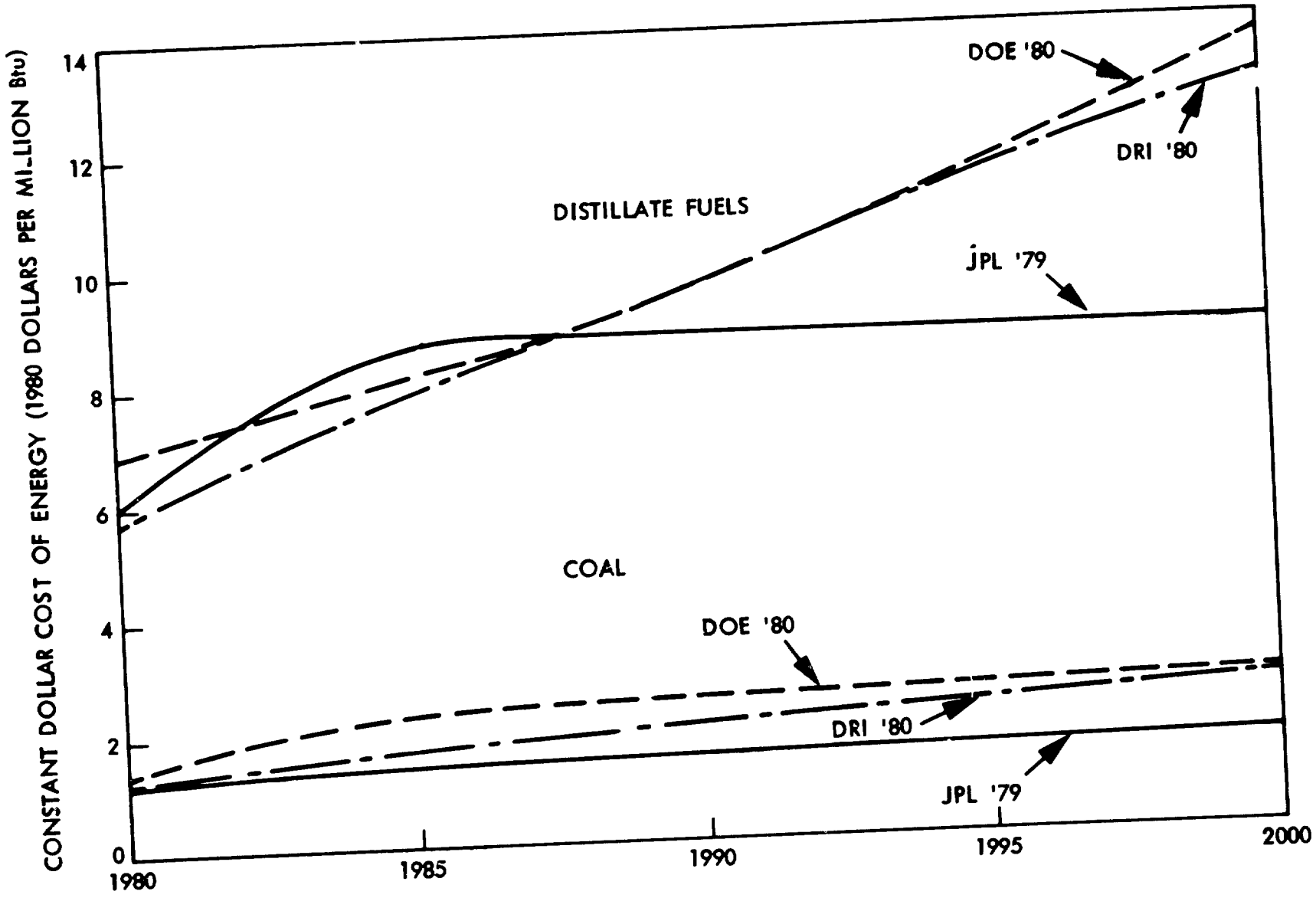

Figure 6. Predicted Fuel Prices to the Year 2000

Table 10. Comparisons of Annualized Life-Cycle Costs Using JPL, DOE, and DRI Fuel Projections

Conventional Diesel Using Distillate Fuel

Data Source	Life-Cycle Cost
JPL	$1,175,000
DOE	1,293,000
DRI	1,263,000

External Combustion Closed Cycle Gas Turbine Using Coal

Data Source	Life-Cycle Cost
JPL	$554,000
DOE	648,000
DRI	608,000

Ratio of Life-Cycle Cost for Distillate to that of Coal

Data Source	Ratio
JPL	2.12
DOE	2.00
DRI	2.08

Differences between the Life-Cycle Cost for Distillate and that of Coal

Data Source	Difference
JPL	$1,175,000 - 554,000 - $621,000
DOE	1,293,000 - 648,000 - 645,000
DRI	1,263,000 - 608,000 - 655,000

Table 11. Ranking[a] of Fuels for Conventional Diesel Engines by Annualized Life Cycle Costs

Ranking	Fuel	Annualized Life-Cycle Cost
1	Oil shale syn-crude	$1,028,000
2	Oil shale distillate	1,036,000
3	Propane	1,047,000
4	No. 6 fuel oil, low sulfur	1,090,000
5	Broadcut fuel oil	1,104,000
6	Coal derived gasoline	1,114,000
7	N- Butane	1,137,000
8	Coal derived distillate	1,139,000
9	Methanol	1,150,000
10	Oil shale gasoline	1,173,000
11	Diesel No. 2	1,175,000
12	Gasoline	1,215,000
13	Methane	1,232,000
14	Hydrogen	1,569,000
15	Ammonia	2,024,000
16	Ethanol	2,676,000

[a] All fuels used in conventional Diesels modified to accept the fuel and dual-fueled when needed.

In some cases, a fuel tender must be used and its costs are included. Except for the last three fuels; hydrogen, ammonia, and ethanol, the rest of the fuels are nearly the same in cost, differing from that of Diesel No. 2 by less than 13%. Because the uncertainty of the calculation is probably near 10%, it can be concluded that the costs are basically equal. The use of an alternative liquid fuel in an engine does not reduce costs but does increase availability. Even if one fuel was in short supply, another one might be available.

The ranking of 24 engine-fuel combinations are shown in Table 12. In this table, there are marked differences in life-cycle cost, ranging from a low of $523,000 to a high of $1,196,000. There are some engine-fuel combinations which are higher but they are not economically attractive and they have, therefore, not been included in these lists. One example is an internal combustion gas turbine using ethanol. A first generation steam engine using Diesel fuel is another. Oil-fired steam engines were used by some railroads before the switch to Diesel engines. Today, the cost of operating such an engine would be extremely high.

Four of the engine-fuel combinations in Table 12 are shown in Table 13 with the life-cycle costs broken down into the four main cost areas. The present Diesel-electric locomotive using Diesel No. 2 is a high fuel cost, low capital cost unit. At the other extreme, the closed cycle gas turbine using coal is a low fuel cost unit with relatively high capital and maintenance costs. The low fuel costs more than counterbalance the other costs to a point where the closed cycle gas turbine locomotive has a life-cycle cost less than half of that of the Diesel-electric unit. Table 13 is useful in evaluating the sensitivity of the life-cycle costs to changes in fuel or other costs. A doubling of coal prices relative to Diesel prices would add $157,000 to the gas turbine life-cycle cost bringing it up to $711,000.

The effect of a reduction in the locomotive usage per year can be estimated from Table 13. The operating, maintenance, and fuel costs are essentially linear functions of the locomotive usage. For the Diesel-electric locomotive, a reduction of 50% in yearly usage as measured in locomotive hp-hr at the rail would reduce the operating, maintenance, and fuel costs by 50% from $1,032,000 to $516,000. The capital cost is unaffected so the total life-cycle cost is $659,000 per year. The operating, maintenance, and fuel costs for the gas turbine locomotive is $351,000. Cutting the usage to half reduces these costs to $175,500 and the life-cycle cost is then $378,500. The ratio of life-cycle costs of the Diesel to the gas turbine was 2.12 and it declined to 1.74 when the yearly usage was cut in half. The ratio approaches one when the ton-mileage is about 15% of the original figure of 4,700,000 hp-hr at the rail per year. The coal-fired locomotive is most cost effective in those applications where locomotives use a lot of fuel but the total route usage is not enough to warrant electrification. For switch engines and most branch line service, the Diesel engine is the better choice.

Table 12. Ranking of Engines by Annualized Life-Cycle Costs

Engine	Fuel	Annualized Life-Cycle Costs
Closed cycle, external combustion regenerative gas turbine	Bituminous coal, western mine mouth	$523,000
Open cycle, external combustion regenerative gas turbine	Bituminous coal, western mine mouth	527,000
Advanced Stirling engine using liquid fuels	Bituminous coal, western mine mouth	548,000
First generation steam engine with reciprocating drive	Bituminous coal, western mine mouth	549,000
Closed cycle, external combustion regenerative gas turbine	Bituminous coal, national average price	554,000
Open cycle, external combustion regenerative gas turbine	Bituminous coal, national average price	559,000
Second generation new steam turbine engine	Bituminous coal, western mine mouth	564,000
Advanced Stirling engine using fluidized bed combustor	Bituminous coal, national average price	577,000
Second generation new steam turbine engine	Bituminous coal, national average price	608,000
First generation steam engine with reciprocating drive	Bituminous coal, national average price	615,000
Long-term "mature" Diesel engine	Oil shale distillate	750,000

TABLE 12. (Cont'd)

Engine	Fuel	Annualized Life-Cycle Costs
Adiabatic turbocompound Diesel Engine with minimum friction and Rankine bottoming cycle	Oil shale distillate	$793,000
Adiabatic turbocompound Diesel with Rankine bottoming cycle	Oil shale distillate	818,000
Adiabatic turbocompound Diesel with minimum friction	Oil shale distillate	840,000
Phosphoric acid fuel cell	Methanol from coal	859,000
Adiabatic Diesel engine with Stirling bottoming cycle	Oil shale distillate	870,000
Advanced Stirling engine using liquid fuels	Oil shale distillate	931,000
Four-stroke turbocharged Diesel engine using directly decomposed methanol	Methanol from coal	940,000
Short-term "mature" Diesel Engine	Broadcut fuel oil	977,000
Open cycle, internal combustion regenerative gas turbine	Oil shale syn-crude	1,029,000
Turbocharged water-cooled Diesel with Rankine bottoming cycle	Diesel No. 2	1,101,000
Phosphoric acid fuel cell	Hydrogen	1,118,000
Turbocharged water-cooled Diesel engine (standard)	Diesel No. 2	1,175,000
Stratified charge rotary combustion engine	Oil shale distillate	1,196,000

Table 13. Fractions of the Annualized Life-Cycle Costs

	Capital	Operating	Maintenance	Fuel	Total
Diesel-electric using Diesel No. 2	143,000	26,000	112,000	894,000	1,175,000
Adiabatic Diesel with M.F. and R.B.C. using oil-shale distillate	137,000	26,000	112,000	518,000	793,000
Steam Turbine using national average price coal	189,000	32,000	162,000	225,000	608,000
Closed cycle, external combustion gas turbine using national average price coal	203,000	32,000	162,000	157,000	554,000

NOTES: All locomotives are assumed to be production versions

R.B.C. - Rankine Bottoming Cycle
M.F. - Minimum Friction

Substantial savings can be accrued by the use of coal-fired locomotives in heavy duty service. The type of engine used in the coal-fired locomotive has little effect on the life-cycle costs but has a secondary effect on the amount of coal which has to be handled and the amount of ash for disposal. The facilities required for fuel handling, fuel storage, and waste disposal were not included in this study. They should be included in future studies of coal-fired locomotives.

SUGGESTIONS AND RECOMMENDATIONS

One of the purposes of this study is to provide suggestions and recommendations on areas where research and development efforts are needed. There are six areas that warrant further investigation. They are:

(1) Partially and fully adiabatic Diesel engines.

(2) Coal combustion systems for locomotives.

(3) Fuel cell requirements for locomotives.

(4) Synthetic hydrocarbon fuels.

(5) Operations.

(6) Emergency fuels.

Novel engine designs will be necessary to make the best use of the adiabatic concept and of the present ceramics capabilities. Exhaust heat recovery systems must be developed if the adiabatic Diesel is to be used to its fullest. Substantial government support will be required for these engines because of the high risks and long development times involved.

The development of a clean and efficient coal combustion system has a moderately high risk and a fairly long development time which will need government support. The rest of the locomotive, including the engine, has a low risk and could be funded by industry. The coal-fired locomotive is a project suited to joint government-industry involvement.

The fuel cell is not yet at a point where a demonstration project is warranted. At this time, the research should be aimed at defining the operating environment and the power requirements of the locomotive so that they can be included in future fuel cell development. The next stage, the development of a demonstration fuel cell locomotive could be started in 3 to 5 years provided methanol is, or appears to be, a viable fuel and that experience with large fuel cells like the New York and Tokyo installations is favorable. The fuel cell project, like the adiabatic Diesel, should be primarily by government support. The risks are fairly high.

If existing Diesel engines are used in the 1990s and beyond, it will be necessary to have a source of synthetic hydrocarbon fuels. That source will probably be oil shale. Oil shale distillate is more suited to the

medium speed Diesels such as those in locomotives than to the high speed Diesels in trucks and cars or to the gas turbines in aircraft. The producers of oil shale fuels will need a stable market for their products especially in the first few years of operation. The railroads are a logical market. The oil shale fuel should be blended at first with Diesel No. 2 and only later be used as a straight fuel. The research necessary to support such a program is probably within the realm of the railroad and the oil shale industries with a minimum of government support.

Fuel savings are only partially related to the components in the locomotive. How the locomotive is used is another area for savings. The railroads have already made gains in fuel savings in the operations area and are continuing to do so. Research into fuel savings through operational changes are needed and are best accomplished by the railroad industry.

Emergency fuels is an area, like operations, where much has already been accomplished. The research in this area must be completed and documentation written so that the information is widely available. During the next 10 years, until alternative engines and fuels are available, the railroads will be extremely vulnerable to disruptions in their fuel supply. The emergency fuels could alleviate some of the effects of such disruptions.

CONCLUSIONS

The type of engine that will be used in locomotives of the future depends almost entirely on the type and cost of the available fuel. Petroleum fuels are expected to be available for a number of years but both the cost and demand for these fuels will continue to rise. The demand for middle distillate fuels such as Diesel No. 2 will probably grow at a faster rate than that of other petroleum fuels primarily because of the increased use of Diesel powered automobiles in the U. S. and abroad. Coal is expected to be readily available in the U. S. for many years and although coal prices are expected to rise, they are not expected to rise as rapidly as the petroleum fuel prices. Of the non-petroleum fuels, oil shale distillate is the one most likely to be used in the next 20 years. It appears to be economically competitive at today's (early 1981) petroleum prices. Availability is still a problem because full scale commercial processing plants have yet to be built. It is likely that they will be built during this decade. Distillate fuel is suitable for medium speed Diesel engines and the railroads may be the first large scale users of this fuel. Methanol from natural gas is also a likely fuel because the supply of natural gas is much larger than it was thought to be 3 to 5 years ago. Methanol and middle distillate fuel from coal are much further in the future with little prospect of large scale commercial production before the end of the century.

The Diesel engine will be the dominant traction power source for the railroad for, at least, the rest of the century. Blends of oil shale and petroleum distillates will probably be used in the 1990s and beyond the year 2000. Coal-fired locomotives will probably be in service by the late 1980s and in growing numbers in the 1990s. They are not expected, how-

ever, to form more than 20% of the fleet within this century. The engine used with coal is expected to be some type of steam engine in the late 1980s gradually shifting to some form of gas turbine in the 1990s.

Beyond the year 2000, the fuel cell and the adiabatic Diesel may enter the fleet. In any case, the railroads can be expected to use a variety of fuels and engines in service by the end of the century. This change from a single fuel to multiple fuels will complicate operations but will also free the railroads from depending on liquid fuels which will still dominate the truck, aircraft, and passenger car transportation systems.