# Development of a Direct Experimental Test for Any Violation of the Equivalence Principle by the Weak Interaction

Final Report

NASA # NAS 8-33572

Peter D. MacD. Parker
7 December 1981

Physics Department
Yale University
New Haven, Connecticut 06520

Prepared for George C. Marshall Space Flight Center,
Marshall Space Flight Center, Alabama 35812.

SCIENTIFIC OBJECTIVES:

One of the requirements of Einstein's theory of General Relativity is the equivalence of gravitational and inertial mass which can also be expressed as the universality of free fall for all different forms of matter and energy. The equivalence principle can be written[1] as

$$M_G/M_I = 1 + \left[ \eta_s \frac{E_s}{M_I} + \eta_{em} \frac{E_{em}}{M_I} + \eta_W \frac{E_W}{M_I} + \ldots \right]$$

where $M_G$ is the passive gravitational mass and $M_I$ is the inertial mass and where the terms in the bracket represent violations due to the strong, electromagnetic, and weak interactions. The size of the sum of the violations in the bracket is measured in the Eötvös experiment by measuring the equality of the gravitational acceleration of different materials. In the most recent versions of this experiment, limits have been set at the level of $10^{-11}$ for any difference in the gravitational acceleration of aluminum vs. gold[2] and at the level of $10^{-12}$ for any difference between aluminum and platinum.[3] Because of the substantial differences in these elements -- the difference in their neutron/proton ratios, the differences in the relativistic masses of their electrons, and the differences in their nuclear and electromagnetic binding energies -- these experiments set very stringent limits on any violation of the equivalence principle by the strong and electromagnetic interactions, i.e. on $\eta_s$ and $\eta_{em}$.

The corresponding limitation on any possible violation due to the weak interaction ($\eta_W$) is not nearly as severe. Haugan and Will[1] have recently pointed out that $(E_W/M_I)_{Al} - (E_W/M_I)_{Pt(Au)} \sim 2 \times 10^{-10}$ and conclude from this that $\eta_W \leq 10^{-2}$ on the basis of the Eötvös results. Attempts to refine this limit significantly through an improvement of the current Eötvös results by a factor of $10^2$ to $10^3$ do not seem feasible at this time.

In view of the fundamental significance of any possible interrelationship between the weak and gravitational interactions, we are looking for other, more direct or more sensitive ways to test for any violation of the equivalence principle by the weak interaction. The following proposal is directed at developing a direct experimental search for such a violation by measuring variations in the rate of the beta decay of $^{212}Bi$ in a changing gravitational potential.

---

1. M.P. Haugan and C.M. Will, Phys. Rev. Letters 37 (1976) 1.
2. P.G. Roll, R. Krotkov and R.H. Dicke, Ann. Phys. (N.Y.) 26 (1964) 442; R.H. Dicke, The Theoretical Significance of Experimental Relativity, Gordon and Breach (1964).
3. V.B. Braginsky and V.I. Panov, JETP 34 (1972) 463.

APPROACH:

The experiment described in this proposal is being developed to make a direct test for any violation of the Equivalence Principle by the weak interaction. This experiment would test for violations of the Equivalence Principle by testing for any variation of the weak-interaction coupling constant with gravitational potential, i.e., a spatial variation of the fundamental constants as discussed by Misner, Thorne and Wheeler.[1)]

The split personality of the decay of $^{212}$Bi (Figure 1) provides an ideal situation for testing the invariance of the weak interaction. Rather than having to measure the absolute rate of a particular beta decay, in the case of $^{212}$Bi the constancy of the beta-decay ($\approx$ 66.3%) can be measured relative to the alpha decay ($\approx$ 33.7%) by a simple measurement of the $\beta$-decay/$\alpha$-decay branching ratio. The measurement of this ratio corresponds to a comparison of two different clocks [the $^{212}$Bi strong-interaction (alpha-decay) clock and the $^{212}$Bi weak-interaction (beta-decay) clock] at a series of identical locations in a gravitational field, as discussed by Will.[2)] Such a branching ratio measurement is completely insensitive to problems such as source stability and is therefore much simpler and more reliable than the measurement of an absolute decay rate. (There are other cases of $\alpha$ vs. $\beta$ decays, but $^{212}$Bi is the only one where the branches are so nearly equivalent that good statistics can be obtained efficiently and simultaneously for both branches.) Furthermore, since the $^{212}$Bi beta decay to $^{212}$Po is followed by a 100% alpha decay, the $^{212}$Bi beta/alpha branching ratio can be measured directly

1. C.W. Misner, K.S. Thorne and J.A. Wheeler, Gravitation (Section 38.6), W.H. Freeman and Co. (1973).
2. C.M. Will, Physical Review D 10 (1974) 2330.

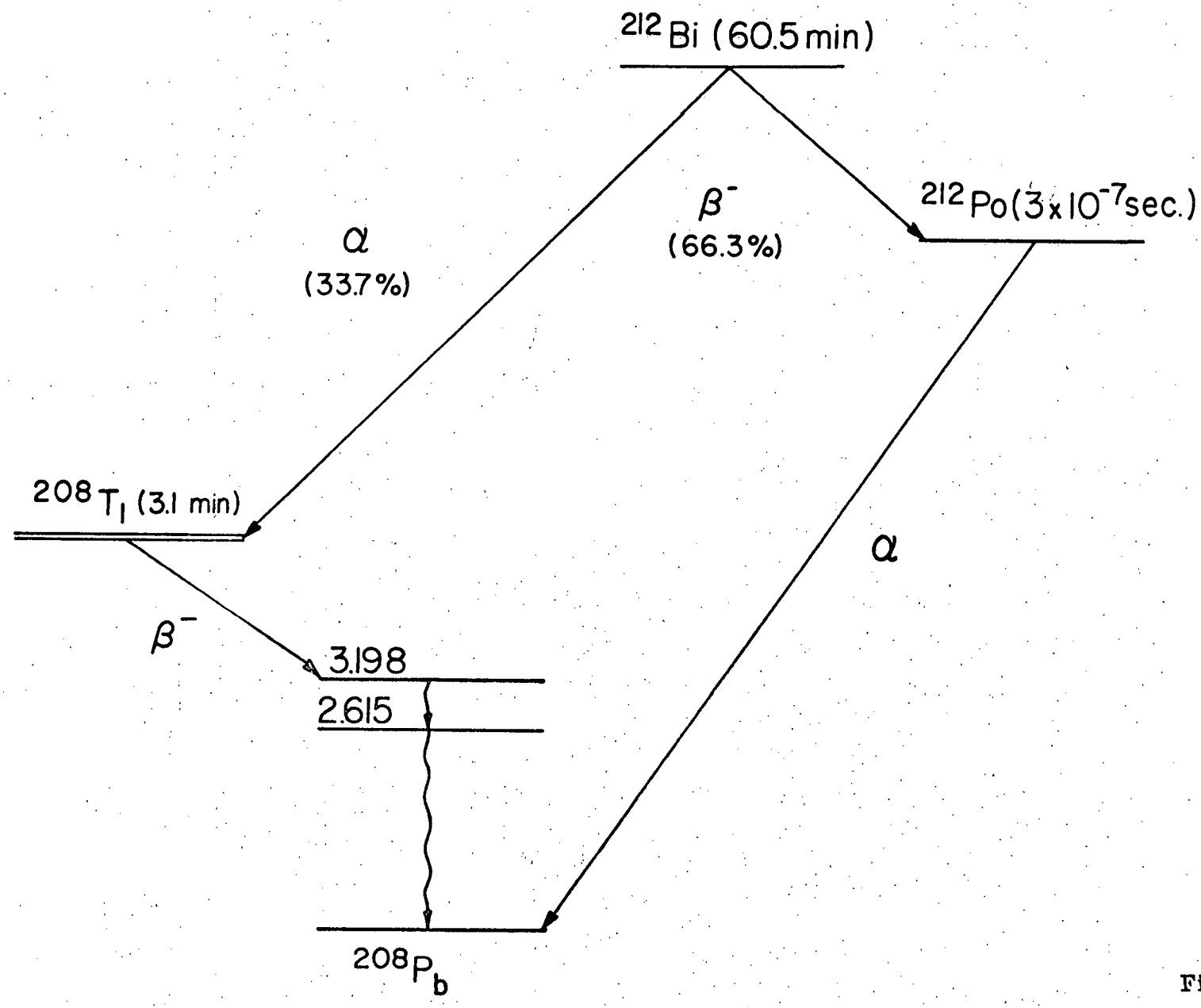
212 Bi (60.5 min)
α
(33.7%)
β⁻
(66.3%)
212 Po (3 x 10⁻⁷ sec.)
208 Tl (3.1 min)
α
β⁻
3.198
2.615
208 Pb

Figure 1

by comparing the $^{212}$Po ($\alpha$) $^{208}$Pb and $^{212}$Bi ($\alpha$) $^{208}$Tl alpha decays. (The resulting monoenergetic alpha particle groups are much easier to measure reliably than is the continuous beta spectrum. The fact that both branches can be measured with the same detector at the same time also increases the reliability of the measurement by making it essentially independent of the dimensional stability of the source-detector geometry.)

In the proposed experiment, the radioactive $^{212}$Bi($t_{\frac{1}{2}}$ = 60.5 minutes) is generated by a $^{228}$Th source ($t_{\frac{1}{2}}$ = 1.90 years); see Figure 2. The measured alpha-particle energy spectrum is shown in Figure 3 ($\Delta E_{\alpha}$ = 30 keV FWHM). The alpha particles of interest are the unresolved doublet at 6.05 and 6.09 MeV corresponding to the alpha decay of $^{212}$Bi and the group at 8.78 MeV corresponding to the decay of $^{212}$Po. Any variation in the ratio of these two alpha particle groups would represent a variation in the relative strengths of the beta and alpha decays of $^{212}$Bi.

The 8.78-MeV $^{212}$Po group is well separated from the other groups and can be easily counted with a single channel analyzer (SCA) and a scaler. The 6.05/6.09-MeV doublet, however, is not sufficiently well separated from the tails of the other alpha-particle groups to be extracted reliably and consistently with a simple SCA window setting. However, since all of the other decays in the $^{228}$Th series are 100% alpha decays, once the source activities have come into equilibrium (at the level of $5 \times 10^{-5}$, this takes only 46 days from an initially pure $^{228}$Th source), a measure of the constancy of the $^{212}$Bi branching ratio can also be obtained quite simply from a measure of the constancy of the ratio of one SCA set on the $^{212}$Po 8.78-MeV alpha-particle group and another SCA set to include the sum of all the alpha-particle groups. There is an overall reduction in the sensitivity in this

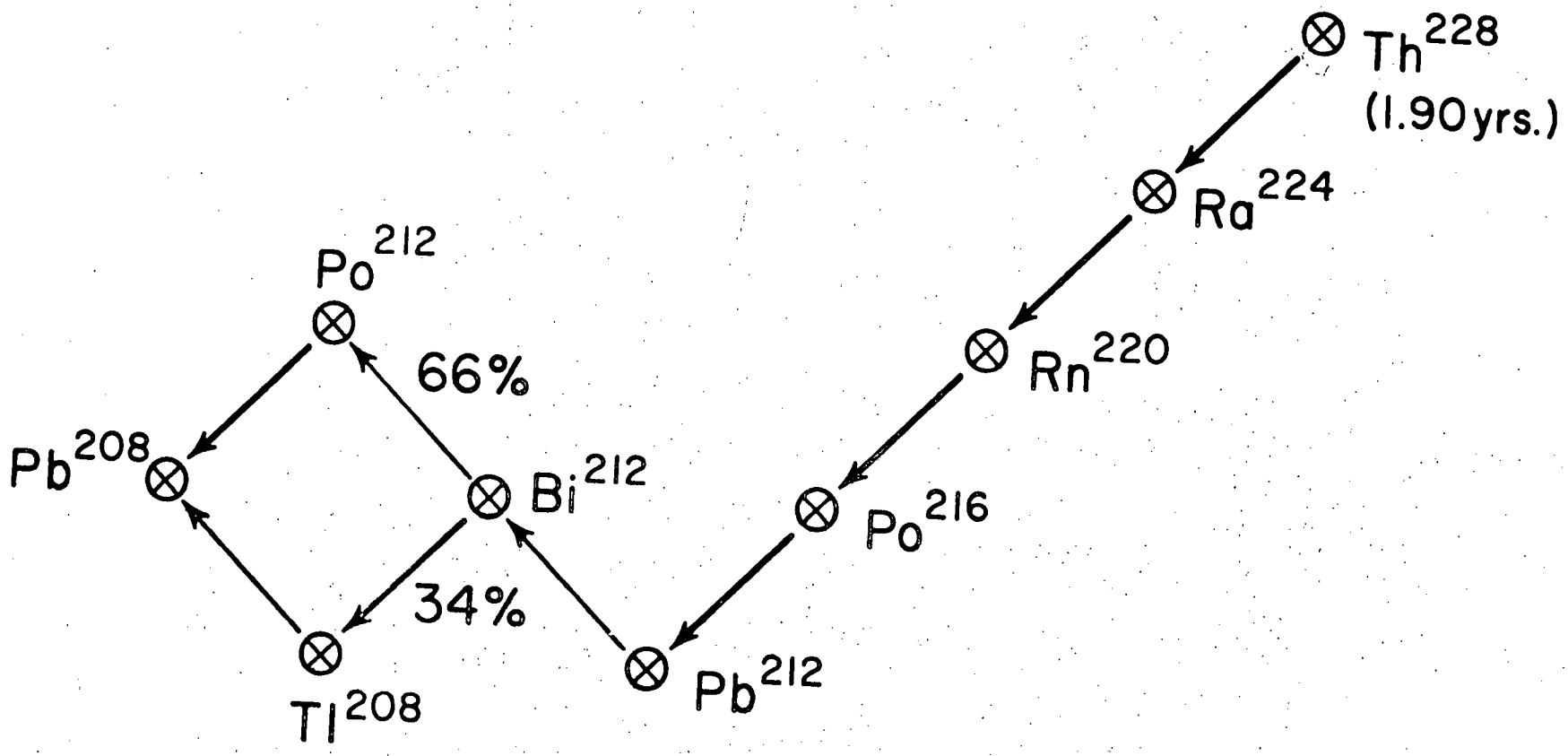
Th228
(1.90yrs.)
Ra224
Rn220
Po216
Pb212
Bi212
66%
34%
Po212
Tl208
Pb208

Figure 2

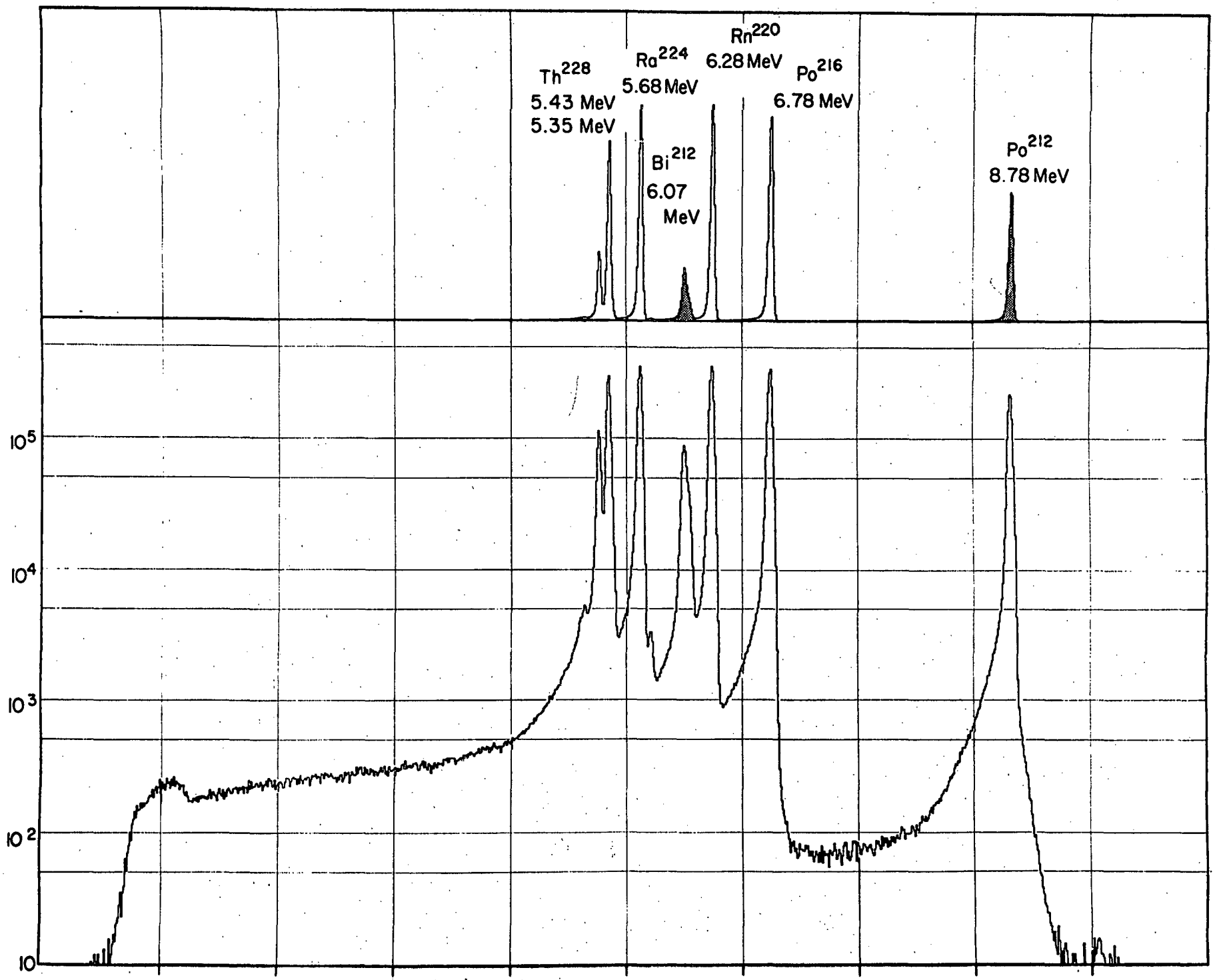
Th228
5.43 MeV
5.35 MeV
Ra224
5.68 MeV
Bi212
6.07
MeV
Rn220
6.28 MeV
Po216
6.78 MeV
Po212
8.78 MeV
10^5
10^4
10^3
10^2
10

Figure 3

method by a factor of $\approx\sqrt{3}$ as compared to a measurement of the ratio of the $^{212}$Po and $^{212}$Bi alpha groups, but the much greater simplicity and reliability of this method argues strongly in its favor.

The level of sensitivity required for such a measurement of a violation of the Equivalence Principle can be estimated on the basis of the size of a change in the gravitational potential which is accessible to such an experiment. The Universal Gravitational Potential, $\Phi_0$, is given by

$$\Phi_0 \approx C^2 = 9\text{x}10^{20} \text{ ergs/gram.}$$

Within the solar system, specific contributions include the following:

$\Phi_{Earth}$ (at its surface) $\approx 6\text{x}10^{11}$ ergs/gram

$\Phi_{Sun}$ (at its surface) $\approx 1.9\text{x}10^{15}$ ergs/gram

$\Phi_{Sun}$ (at 1 A.U.) $\approx 8.9\text{x}10^{12}$ ergs/gram.

On this basis, the following <u>changes</u> in the gravitational potential $[\Delta\Phi \equiv \Phi_{MAX} - \Phi_{MIN}]$ can be realized in the following classes of experiments:

(1) Ground-Based, utilizing the eccentricity of the Earth's orbit
(e=0.017)-----$\Delta\Phi \approx 3\text{x}10^{11}$ ergs/gram
$\Delta\Phi/\Phi_0 \approx 3\text{x}10^{-10}$.

(2) Spacecraft in an eccentric orbit around the earth
($R_E < r < 10\ R_E$)-----$\Delta\Phi \approx 6\text{x}10^{11}$ ergs/gram
$\Delta\Phi/\Phi_0 \approx 6\text{x}10^{-10}$.

[no real advantage over (1)]

(3) Spacecraft in an eccentric solar orbit (e.g., the Solar Probe mission with a perihelion distance of 4 $R_\odot$) (averaged over $-90^\circ \leq \Theta_\odot \leq +90^\circ$, $\Delta t \approx \frac{1}{2}$ day, $\rightarrow \sim 6\ R_\odot$)-----$\Delta\Phi \approx 3.2\text{x}10^{14}$ ergs/gram
$\Delta\Phi/\Phi_0 \approx 3\text{x}10^{-7}$.

Thus, on the basis of the relative magnitudes of the available $\Delta\Phi$'s, a Solar-Probe type mission is approximately 1000 times more sensitive than either (1) or (2). Experiments (1) and (2) do have two advantages over a Solar-Probe type mission. Whereas a Solar-Probe type mission would provide only a single pass ($\approx \frac{1}{2}$ day) perihelion measurement (at its $\Phi_{MAX}$), both (1) and (2) would provide repeated measurements at their $\Phi_{MAX}$ for a total of approximately 500 days of data measurement at each orbital extreme over a 5 year period for a factor of $\approx 1000$ increase in data accumulation efficiency compared to a Solar-Probe type mission. Secondly, both experiments (1) and (2) [ especially (1)! ] would be substantially simpler and cheaper than experiment (3). However, since the sensitivity of such a measurement has a linear dependence on $\Delta\Phi$ but depends only on the square root of the data measurement efficiency, experiments of type (1) and (2) would require an efficiency increase by a factor of $10^6$ in order to compete with a Solar-Probe type mission (e.g., a multiplicity of 1000 such experiments collecting data over a time interval 1000 times longer than the $\frac{1}{2}$ day Solar-Probe perihelion passage).

At the present time it seems reasonable to adopt a figure for the required sensitivity for such an experiment as corresponding to a Weak Interaction violation of the Equivalence Principle at the level of $10^0$ [ i.e., $\sim 10^{-6}$ corresponding to $\Delta\Phi$ (Solar Probe)/$\Phi_0$, although one would clearly want to eventually improve this to $\leq 10^{-8}$].

Preliminary studies had demonstrated the feasibility of making such measurements with a sensitivity of $\approx 10^{-4}$ in a 24-hour counting period (corresponding to a total counting rate of $\approx 3 \times 10^3$/sec in the alpha-particle detector) using standard NIM electronics. The specific purpose for which the present project was funded to see how much this sensitivity could be improved by increasing the counting rate

which could be tolerated through the use of much faster electronics.

In order to make these tests, a system of fast electronics was assembled as shown in Figure 4. [Those units designated with an (*) were purchased with funds provided by this grant; all of the other units were made available to this project from the Department of Energy umbrella contract # DE-AC02-76ER0374 which supports the operation of this laboratory. This DOE contract also supported all of the personnel, operational, and overhead aspects of this project.] This system was designed to analyze the alpha-particle spectrum in Figure 3 by setting gates around (a) the 8.78-MeV $^{212}$Po alpha-particle group and (b) the 5.35-MeV to 6.78-MeV alpha-particle groups from $^{228}$Th, $^{224}$Ra, $^{220}$Rn, $^{216}$Po, and $^{212}$Bi and then using fast scalers to count the alpha particles in each of these two gates. The alpha particles which were not in either of these gates (e.g., the tails of the alpha-particle peaks) were stored in a 1024-channel pulse-height-analyzer (PHA) in order to monitor gain shifts, discriminator shifts, and detector degradation due to radiation damage. In this way we were able to accumulate and analyze the alpha-particle spectrum with the dispersion of a 1024-channel PHA but without having to handle the high counting rate ($\sim 10^5$ /sec) in the PHA since $\sim$ 99% of the counting rate was routed to fast scalers and only $\sim$1% was routed to the PHA. A comparison of the gated and ungated alpha-particle spectra is shown in Figure 5.

The net sesult of this work was an improvement by a factor of $\approx$100 in the usable counting rate to $\approx 10^5$/sec which corresponds to a sensitivity of $\approx 10^{-5}$ for a one-day measurement. This is, however, still not adequate ($\leq 10^{-6}$) for measuring a violation at the level of $10^0$ for a Solar-Probe mission. The factor of 10 increase in sensitivity required for such a measurement of $10^0$ violation (a factor of $10^3$ im-

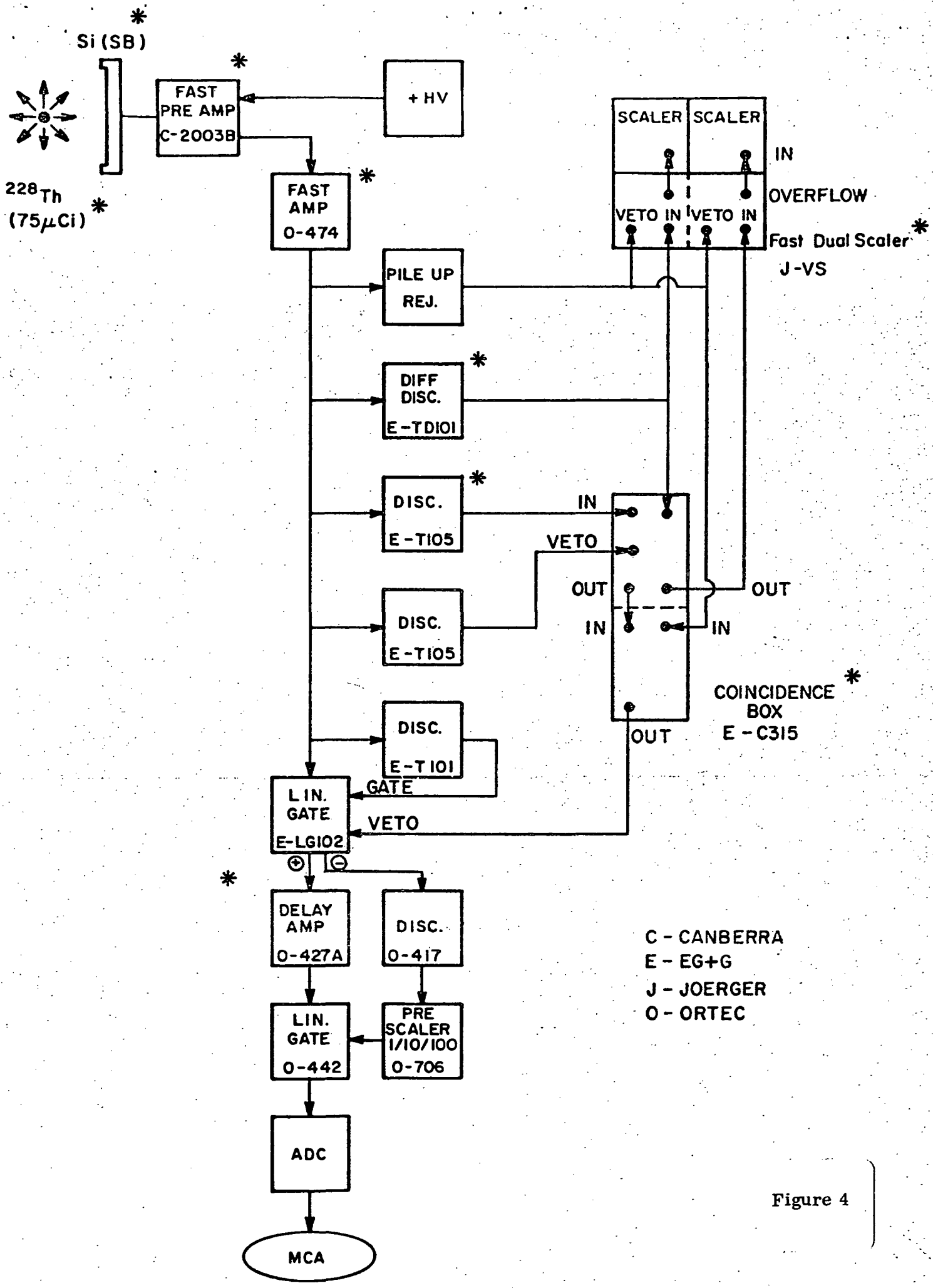
Si (SB)
228Th
(75μCi)
FAST PRE AMP C-2003B
+ HV
FAST AMP O-474
PILE UP REJ.
DIFF DISC. E-TD101
DISC. E-T105
DISC. E-T105
DISC. E-T101
LIN. GATE E-LG102
GATE
VETO
DELAY AMP O-427A
DISC. O-417
LIN. GATE O-442
PRE SCALER 1/10/100 O-706
ADC
MCA
SCALER
SCALER
IN
OVERFLOW
VETO IN
VETO IN
Fast Dual Scaler
J-VS
IN
VETO
OUT
IN
OUT
IN
OUT
COINCIDENCE BOX
E-C315
C - CANBERRA
E - EG+G
J - JOERGER
O - ORTEC

Figure 4

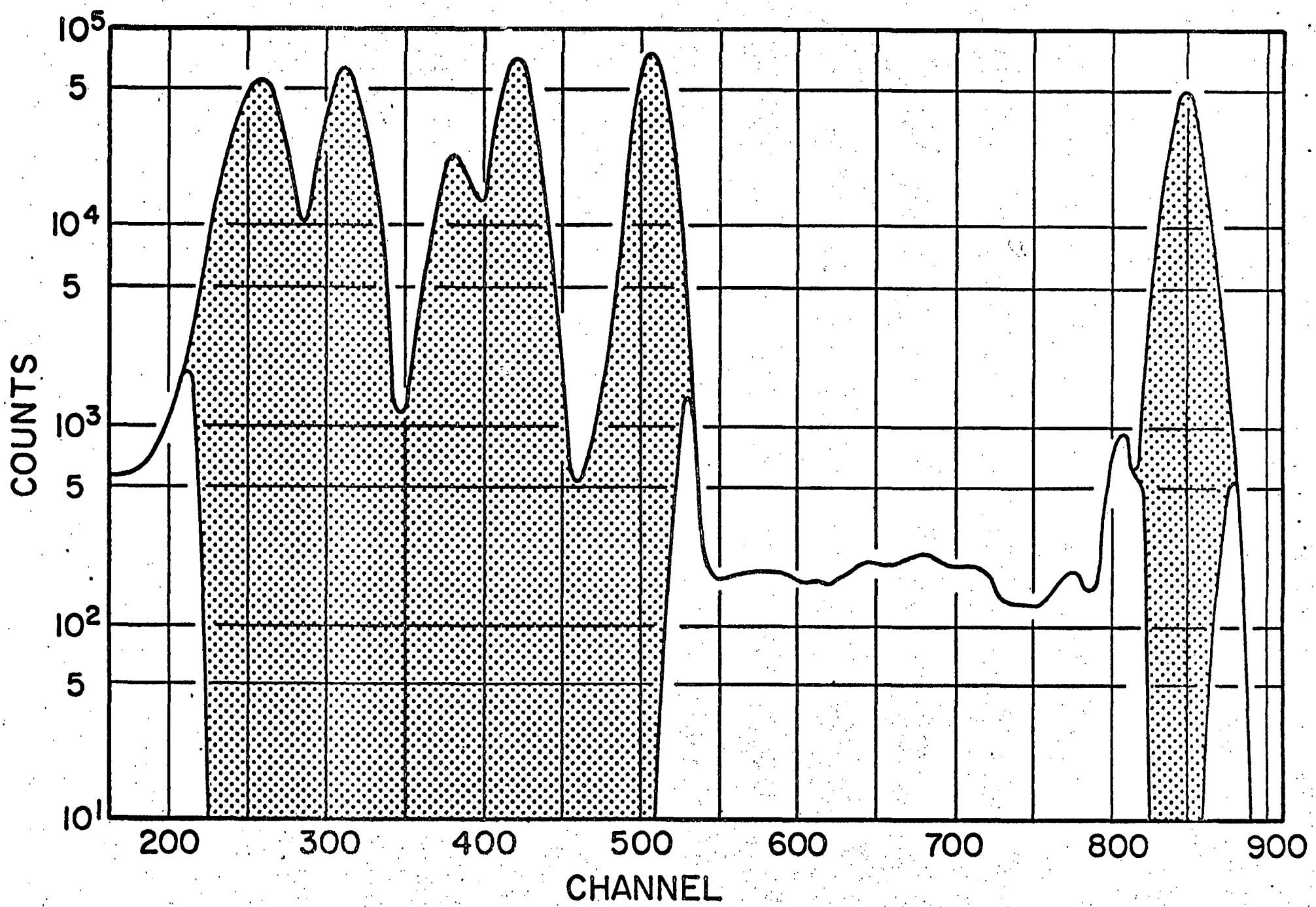
COUNTS
$10^5$
5
$10^4$
5
$10^3$
5
$10^2$
5
$10^1$
200
300
400
500
600
700
800
900
CHANNEL

Figure 5

provement is required to test for a violation at the level of $10^{-2}$) would require a factor of 100 ( a factor of $10^6$ for a violation of $10^{-2}$) increase in either the counting rate of the system or the multiplicity of detectors in the experiment.

At the present time counting rates in excess of $10^5$/sec do not appear to be feasible with this system due to a loss of resolution. It is conceivable that an additional factor of 5-10 could be obtained by additional work on pile-up rejection and perhaps the use of different discriminator circuits, but at that level the detector will be counting at a rate of $10^{11}$/day which is such that significant detector deterioration due to radiation damage will occur during a 1-day counting period necessitating changes in the detector biasing on a scale of every few hours and replacement of the detector every few days; counting rates beyond $10^6$/sec do not appear practical at this time.

Additional increases in sensitivity can be realized by utilizing a large array of such experiments to increase the effective counting rate. An array of 100 sets of the present experiment (perhaps at a cost of ~ $20,000 each for a large array) could then search for violations of the order of $10^0$ in a Solar Probe mission. Searches for violations at the level of $10^{-2}$ would require an array of $10^6$ experiments even for a Solar Probe mission, and do not therefore appear to be economically feasible. Earth-Orbit and Ground-Based experiments, as described above, would require multiplicities $10^3$ times larger than for a Solar Probe mission and, therefore, do not appear feasible at the present time even for violations at the level of $10^0$.

Our current plans are (1) to utilize this instrumentation in order to see what additional improvements can be achieved in the allowable counting rate, (2)

to look into the use of other detectors, and (3) to reexamine this experiment conceptually in order to see if alternative approaches to this idea might be found (for example, probing much larger changes in $\Delta \Phi$ by making use of decays in material already in the neighborhood of highly condensed objects such as neutron stars or black holes).

Expenditures (# NAS 8-33572):

| | | |
|---|---|---|
| $^{228}$Th Alpha-Particle Source (75 $\mu$ Ci) | | $ 525. |
| Si (SB) Detector | | 550. |
| Pre-Amplifier C-2003B | | 565. |
| Amplifier O-474 | | 555. |
| Coincidence Circuit E-C315/NL | | 930. |
| Discriminator E-T105/N | | 885. |
| Differential Discriminator E-TD101/N | | 995. |
| Dual Scaler J-VS | | 950. |
| Delay Amplifier O-442 | | 940. |
| Power Supplies | | 948. |
| | TOTAL | $ 7843. |