NASA TM-83263

NASA Technical Memorandum 83263

NCE

NASA-TM-83263 19820014333

WIND-TUNNEL INVESTIGATION OF THE POWERED LOW-SPEED LONGITUDINAL AERODYNAMICS OF THE VECTORED-ENGINE-OVER (VEO) WING FIGHTER CONFIGURATION

John W. Paulson
NASA Langley Research Center
Hampton, VA 23665

Perry D. Whitten
General Dynamics Corporation
Ft. Worth Division
Ft. Worth, TX

Stephen C. Stumpfl
U. S. Air Force Wright Aeronautical Laboratory
Wright-Patterson Air Force Base, OH

LIBRARY COPY

MAR 29 1982

LANGLEY RESEARCH CENTER
LIBRARY, NASA
HAMPTON, VIRGINIA

March 1982

NASA
National Aeronautics and
Space Administration

Langley Research Center
Hampton, Virginia 23665

SUMMARY

A wind-tunnel investigation incorporating both static and wind-on testing has been conducted in the Langley 4- by 7-Meter Tunnel to determine the effects of vectored thrust along with spanwise blowing on the low-speed aerodynamics of an advanced fighter configuration. Data were obtained over a large range of thrust coefficients corresponding to takeoff and landing thrust settings for many nozzle configurations. This report presents the complete set of static thrust data and the complete set of longitudinal aerodynamic data obtained in this investigation. These data are intended for reference purposes and, therefore, are presented here without analysis or comment. The analysis of the thrust-induced effects found in this investigation are not discussed in this report.

INTRODUCTION

In the past 4 or 5 years, there has been renewed interest in the Short Takeoff and Landing (STOL) performance of combat aircraft, not only for the Navy V/STOL programs, but also for future Air Force programs. The Air Force interest arises from the potential need to operate aircraft out of bomb damaged airfields in Western Europe where usable runway lengths may be reduced to 305 m to 610 m (1000 ft to 2000 ft). Thus, the next generation aircraft may have a requirement for substantially reduced field lengths from those of present day aircraft. While some of today's aircraft can takeoff from relatively short runways, none can land in the 305 m to 610 m (1000 ft to 2000 ft) runway lengths that may be required. It would appear that large improvements in aerodynamics as well as improved braking or thrust reversing will be required for aircraft to operate out of short fields.

There are several approaches which utilize thrust effects to improve the aerodynamics of fighter configurations. Vectoring the engine exhaust or bleeding engine air for spanwise blowing or flap boundary-layer control (BLC) are promising methods. One proposed configuration, developed by General Dynamics, the Vectored-Engine-Over wing (VEO wing) would employ both vectoring the main engine exhaust in the chordwise direction and diverting a portion of the engine exhaust in the spanwise direction over the wing upper surface. This concept was proposed to improve low-speed lift coefficients through direct thrust, thrust-induced circulation and BLC, and leading-edge vortex flow enhancement.

The VEO wing configuration shown in figures 1 and 2 is a close-coupled wing canard with twin, wide-spaced engine nacelles mounted above the wing with a rectangular nozzle which direct the exhaust flow over the upper surface of the wing trailing-edge flap system. A secondary nozzle located at the wing quarter chord on the side of the engine nacelle was used to divert a portion of the main engine exhaust for spanwise blowing on the wing upper surface. This configuration has been tested in the Langley 4- by 7-Meter Tunnel to obtain the static longitudinal aerodynamic characteristics and to define the thrust-induced effect of over the wing chordwise blowing along with spanwise blowing. (An earlier version of this configuration which had the nacelles next to the body has been reported in references 1 and 2.) Tests were run over the angle-of-attack range from -4° to 29° at free-stream dynamic pressures from 0.48 to

N82-22207

1.92 kPa (10 to 40 lb/ft^2). This dynamic pressure range allowed thrust coefficient to vary from 0 to 5; however, most testing was conducted at a dynamic pressure of 1.92 kPa (40 lb/ft^2) and over a thrust coefficient range from 0 to 2. Flap and main nozzles were deflected 0°, 15° and 30° while spanwise nozzles were deflected 40° or parallel to the wing leading edge and 60° or 20° aft of the wing leading edge.

SYMBOLS

All data have been reduced to coefficient form and are presented in the stability axis system. The model moment center was at 25 percent of the wing mean aerodynamic chord. All measurements and calculations were made in U.S. Customary Units; however, all data contained in this report are given in both S.I. and U.S. Customary Units. (See ref. 3.) The symbols enclosed in parentheses are used in the tabulated printouts and their usual notation precedes them.

A_e	nozzle exit area, cm^2 (in^2)
A_s	spanwise nozzle throat area, cm^2 (in^2)
A_t	main nozzle throat area, cm^2 (in^2)
AF	axial force, N (lbf)
c	mean aerodynamic chord, cm (in.)
C_D (CD)	drag coefficient, Drag/qS
$C_{D,CT}$ (CDCT)	interpolated drag coefficient at constant thrust coefficient
$C_{D,e2}$ (CDE2)	thrust-removed drag coefficient, $C_D + C_{T,RF} \cos(\alpha + \delta_j)$
C_L (CL)	lift coefficient, Lift/qS
$C_{L,CT}$ (CLCT)	interpolated lift coefficient at constant thrust coefficient
$C_{L,e2}$ (CLE2)	thrust-removed lift coefficient, $C_L - C_{T,RF} \sin(\alpha + \delta_j)$
C_m (CPM)	pitching-moment coefficient, Pitching moment/qSc
$C_{m,CT}$ (CMCT)	interpolated pitching-moment coefficient at constant thrust coefficient
$C_{m,e2}$ (CME2)	thrust-removed pitching-moment coefficient, $C_m + \bar{x}/\bar{c}\, C_{T,RF} \sin \delta_j + \bar{z}/\bar{c}\, C_{T,RF} \cos \delta_j$
C_T (CT)	thrust coefficient, T_T/qS
$C_{T,RF}$ (CTRF)	reaction force thrust coefficient, T_{RF}/qS

d_e	distance from nozzle exit to trailing-edge flap hinge line on, cm (in.)
h	vertical dimension of nozzle on (in.)
NF	normal force, N (lbf)
NPR_E (NPR)	main nozzle pressure ratio, $P_{T,E}/P_\infty$
NPR_S (NPRS)	spanwise nozzle pressure ratio, $P_{T,S}/P_\infty$
NPR_{TOT} (NPRTOT)	area-weighted overall nozzle pressure ratio, $NPR_E \left[\frac{A_t}{A_s + A_t}\right] + NPR_s \left[\frac{A_s}{A_s + A_e}\right]$
P_T	total pressure, kPa (lbf/ft^2)
P_∞	tunnel static pressure, kPa (lbf/ft^2)
q (Q)	dynamic pressure, kPa (lbf/ft^2)
S	wing reference area, m^2 (ft^2)
SF	side force, N (lbf)
T	static thrust force $[NF^2 + AF^2 + SF^2]^{1/2}$, N (lbf)
T_E	main nozzle static thrust, N (lbf)
T_{RF}	reaction force static thrust, N (lbf)
T_s	spanwise nozzle static thrust, N (lbf)
T_T	total nozzle static thrust, $T_E + T_S$, N (lbf)
TOH	static thrust divided by static pressure, T/p_∞
x,y,z	axis system dimensions, cm (in.)
α (ALPHA)	angle of attack, deg
δ_c	canard deflection, deg
δ_{LE}	wing leading-edge flap deflection, deg
δ_{TE}	canard trailing-edge flap deflection, deg
δ_{TEI}	wing inboard trailing-edge flap deflection, deg
δ_{TEO}	wing outboard trailing-edge flap deflection, deg

Λ_S	spanwise blowing angle, deg
θ_j (THETAJ)	jet deflection angle, $-\tan^{-1}$ NF/AF, deg
θ_C	nozzle cowling angle, deg
θ_R	nozzle ramp angle, deg
θ_U	upper surface angle of nozzle, N_{20}
θ_L	lower surface angle of nozzle, N_{20}

Nomenclature:

B_2	baseline fuselage
BLC	boundary-layer control
F.S.	fuselage station, cm (in.)
H_2^a	canard with 50° leading-edge sweep
H_3^a	canard with 55° leading-edge sweep
N	baseline nacelle
N_1	baseline main nozzle (see fig. 4)
N_4	large area round spanwise blowing nozzle (see fig. 8)
N_{4a}	small area round spanwise blowing nozzle (see fig. 8)
N_{11}	40° rectangular spanwise blowing nozzle (see fig. 8)
N_{13}	alternate nozzle (see fig. 5)
N_{20}	alternate nozzle (see fig. 6)
N_{21}	60° rectangular spanwise blowing nozzle (see fig. 8)
N_{22}	alternate nozzle (see fig. 7)
W_1	baseline wing
WCP	wing chord plane

Subscript:

a	15° main nozzle ramp without spanwise blowing (see fig. 4)
b	15° main nozzle ramp with spanwise blowing (see fig. 4)

e	30° main nozzle ramp with spanwise blowing (see fig. 4 or nozzle exit)
f	30° main nozzle ramp without spanwise blowing (see fig. 4)
s	spanwise
SWB	spanwise blowing nozzle
t	nozzle throat

Superscript:

a	forward nozzle location
b	aft nozzle location

MODEL DESCRIPTION

The VEO-wing model is a close-coupled wing-canard configuration with engine nacelles mounted above the wing as shown in the Langley 4- by 7-Meter Tunnel in figures 1 and 2. A planform drawing (fig. 3) shows the major components of the model. General model dimensional characteristics are given in tables 1 and 2. The wing has a full-span leading-edge flap which could be deflected 0° or 20° and a part-span trailing-edge flap which could be deflected 0°, 15°, and 30°. The trailing-edge flap had an inboard section, located behind the exhaust nozzle, which could be deflected separately from the outboard section. The canard, which could be deflected to ±20°, had a trailing-edge flap which could be deflected 0° to 20° but did not have a leading-edge device. The simple body on this model was of circular cross section with an ogive nose cone and was not intended to represent an actual fuselage but rather was to shield the balance, airlines, and instrumentation from the tunnel flow.

The engine nacelles housed airlines which provided compressed air to the main rectangular nozzles located just upstream from the hinge of the inboard flap. There were several nozzle types available which varied the internal geometry as shown in figures 4 to 7. The baseline of N_1 nozzle had interchangeable ramps which varied both throat area and nozzle deflection angle as required to match the trailing-edge flap angle. That is, when the flap deflections were equal to 15°, the actual upper-surface angle of the flap was 20° and the "a-ramp" or 20° ramp was used to give a continuous upper surface. When the 30° flap deflection was used, the upper surface angle was 35°; however, to prevent overexpanding the nozzle, the "f-ramp" or 25° ramp was used which reduced the break in the upper surface to only 10°. This nozzle also had a pair of nozzle ramps which not only matched trailing-edge deflection but also reduced A_{TH} when the spanwise blowing nozzles were opened such that total exhaust area remained constant. That is,

$$A_t\Big|_{\text{No SWB}} = A_t\Big|_{\text{SWB}} + A_s \tag{1}$$

The geometry for the spanwise blowing nozzles is shown in figure 8. The N_{11} and N_{21} nozzles are representative of the type of nozzles that could be incorporated into an actual configuration where a port could be opened in the side of the nacelle and a portion of the exhaust flow would be diverted by vanes in the spanwise direction. In this case, the two nozzles could blow 40° or 60° or parallel to and 20° aft of the leading edge. These spanwise blowing ports were located just above the wing surface and approximately at 0.25 c as shown in figure 3. These nozzles were intended to be massive blowing concepts where approximately 25 percent of exhaust mass flow would be directed in the spanwise direction, as opposed to the low mass flow concepts more typical of spanwise blowing at or near the leading edge.

INSTRUMENTATION

Forces and moments, including thrust forces, were measured on an NASA Langley six-component strain-gage balance. However, since the airline/balance interaction calibration was only completed for longitudinal components only normal force, axial force and pitching moment were used in the data reduction. Angle of attack was measured by an internally mounted accelerometer which measured actual model attitude in the tunnel including balance and/or sting deflection. Nozzle total pressures were obtained from three total pressure probes in each main nozzle and a single total pressure probe in each spanwise nozzle. Nozzle interval statics as well as external nacelle and wing surface statics were measured by pressure transducers and multiple scanning pressure valves.

STATIC THRUST AND DATA REDUCTION

Static thrust performance of each individual nozzle as well as various combinations of nozzles were obtained in the static thrust calibration phase of the test. This was done to define not only the static thrust force but also the jet-turning angle and efficiencies of the various nozzles. The thrust force and turning angle were determined for each nozzle as follows:

$$T = \sqrt{NF^2 + AF^2 + SF^2} \tag{2}$$

and

$$\theta_j = -\tan^{-1}\frac{NF}{AF} \tag{3}$$

From these individual thrusts, the total gross static thrust of a configuration could be determined by summing the spanwise and main nozzle thrust

$$T_T = T_{S_{left}} + T_{S_{right}} + T_{E_{left}} + T_{E_{right}} \tag{4}$$

This thrust (T_T) is equivalent to the engine thrust output or throttle setting of the configuration.

As mentioned in the last section, individual nozzle total pressure ratios were obtained; these were area weighted to arrive at an overall configuration nozzle pressure ratio

$$NPR_{TOT} = NPR_E \left[\frac{A_t}{A_s + A_t}\right] + NPR_s \left[\frac{A_s}{A_s + A_t}\right] \tag{5}$$

While these values are indicative of the sort of performance that must be available from the engine, there is a different thrust that must be removed from the aerodynamic data if thrust effects are to be examined. Thus, during the actual wind-tunnel test static thrust calibrations were obtained for the all up configuration (i.e. flaps deflected and all nozzles blowing). This reaction force thrust (T_{RF}) is then the appropriate thrust to remove from the aerodynamic data and will be lower than T_T due to the cancellation of side force produced by the spanwise blowing nozzle. Thus, to produce a given force on the configuration, T_{RF}, the engine will need to produce a greater thrust, T_T, when the spanwise nozzles are used than when only the main nozzles are used. The T_{RF} is then removed from the aerodynamic data as follows:

$$C_{L,e2} = C_L - C_{T,RF} \sin(\alpha + \theta_j) \tag{6}$$

$$C_{D,e2} = C_D + C_{T,RF} \cos(\alpha + \theta_j) \tag{7}$$

$$C_{m,e2} = C_m + \bar{x}/\bar{c}\, C_{T,RF} \sin\theta_j + \bar{z}/\bar{c}\, C_{T,RF} \cos\theta_j \tag{8}$$

TEST CONDITIONS

Data were obtained in the 4- by 7-Meter Tunnel on the VEO-wing configuration at angles of attack from -4° to 24° without sideslip or roll angles. Data were taken at tunnel dynamic pressures between 1.91 kPa (40 lbf/ft^2) and 0.96 kPa (20 lbf/ft^2) and thrust was varied to give a C_T range from 0 to 5 as shown in the following table:

C_T	q_∞, kPa	(lbf/ft^2)	T, N	(lbf)
0	1.91	(40)	0	0
.1			62	(14)
.2			124	(28)
.4			249	(56)
.8			498	(112)
1.2			747	(168)
1.6			996	(224)
2.0			1245	(280)
3.2	1.43	(30)	1494	(336)
4.8	0.96	(20)	1494	(336)

A set of runs for each configuration generally consisted of a power-off (C_T = 0) baseline run, a period of jet on running while the model temperature was stabilized, a static thrust calibration to obtain T_{RF}, a series of α sweeps at several constant C_T and finally data at a constant α while C_T was varied. A complete run schedule for both the static and wind-on portions of the test is given in table 3.

A comment should be made about the accuracy with which the thrust coefficients were held during a given set of runs. Because of the difficulty of setting a given plenum presure in the model (and thus the resulting thrust coefficient), these data were obtained at a range of thrust coefficients near the desired values listed in the table. For example, during run 167, C_T varied from 1.94 to 1.97 rather than holding constant at 2.0. Further, during Run 171, C_T varied from 2.01 to 2.03; again, this is not the desired 2.0. Moreover, the problem of directly comparing power-on data from Runs 167 and 171 is apparent in that the thrust setting is different. Although a worst case of ΔC_T = 0.09 (i.e. 2.03 to 1.94) for these two runs or about 4 to 5 percent is not a large error, 900 counts of drag make comparing drag polars difficult. Therefore, all the data have been scaled to the constant C_T value. In doing this, it is assumed that there are no changes in the induced effects and that the total coefficients are changed by only small increments in the direct thrust components. This scaling is accomplished by first removing the actual direct thrust components (at the incorrect thrust coefficient) from the total aerodynamic coefficients (see eqs. 6, 7, and 8) and then adding the corrected direct thrust components (at the correct thrust coefficients) back to the data to obtain the scaled total aerodynamic coefficients. Therefore, the data for both Runs 167 and 171 have been scaled to C_T = 2 as have all other data been scaled at the values given in the table in this section.

PRESENTATION OF RESULTS

A complete set of primary tabular results from this test is found in table 4 (for the static run) and in table 5 (for the wind-on runs). Presented in table 4 are engine nozzle pressure ratio (NPR), spanwise nozzle pressure ratio (NPRS) and total weighted nozzle measure ratio (NPRTOT). Also presented are

static thrust divided by static pressure (TOH) and jet turning angle (THETAJ). It should be noted that TOH is the measured thrust for the given configuration (i.e., the one listed by run number) and will correspond to a T_T or T_{RF} depending on the configuration. In general, all static runs after Run 150 are T_{RF} for complete configurations tested in the wind tunnel.

Presented in table 5 are the wind-on longitudinal data, C_L, C_D, and C_m along with the thrust-removed longitudinal data, $C_{L,e2}$, $C_{D,e2}$, and $C_{m,e2}$, and the static thrust data needed to generate the thrust-removed aerodynamics. Also presented is a set of data, $C_{L,CT}$, $C_{D,CT}$, and $C_{m,CT}$, or longitudinal coefficients at constant thrust coefficients as discussed earlier.

This report is intended to be a reference which contains a complete set of data, a reasonable description of the model geometry, and description of the test condition for an extensive wind-tunnel investigation of the thrust-induced effects on the VEO-wing configuration. These data have been analyzed and reported in several reports (refs. 2 to 7).

REFERENCES

1. Whitten, P. D.: An Experimental Investigation of a Vectored-Engine-Over-Wing Powered-Lift Concept. Vol. II-High Angle of Attack and STOL Tests. U.S. Air Force AFFD-TR-76-92, vol. II, March 1978.

2. Leavitt, Larry D.; and Yip, Long P.: Effects of Spanwise Nozzle Geometry and Location on the Longitudinal Aerodynamic Characteristics of a Vectored-Engine-Over-Wing Configuration at Subsonic Speeds. NASA TP-1215, 1978.

3. Mechtly, E. A.: The International System of Units - Physical Constants and Conversion Factors (Second Revision). NASA SP-7012, 1973.

4. Stumpfl, S. C.: Vectored-Engine-Over-Wing Concept Development. Proceedings V/STOL Aircraft Aerodynamics, vol. II, Naval Post Graduate School, Monterey, California, May 1979, 11.850.

5. Paulson, J. W., Jr.: An Analysis of Thrust-Induced Effects on the Longitudinal Aerodynamics of STOL Fighter Configurations. AIAA Paper 80-1879, 1980.

6. Paulson, J. W., Jr.: Thrust-Induced Aerodynamics of STOL Fighter Configurations. NASA CP-2162, Tactical Aircraft Research and Technology, vol. II, pt 2, October 1980, pp.

7. Whitten, P. D.: and Howell, G. A.: Investigations of the VEO-Wing Concept in Air-To-Ground Role. U.S. Air Force AFFDL-TR-79-3031, March 1979.

TABLE 1.- General Geometric Characteristics

Reference Geometry (Trapezoidal Wing, W_1)

Wing area	0.325 m^2 (3.5 ft^2)
Aspect ratio	3.75
Wing span	110.424 cm (43.474 in.)
Leading-edge sweepback	40°
Taper ratio	0.4
Root chord	42.067 cm (16.565 in.)
Tip chord	16.828 cm (6.625 in.)
Mean aerodynamic chord	31.250 cm (12.303 in.)
Longitudinal LE location (fuselage station)	113.150 cm (44.547 in.)
Lateral location (span station)	23.660 cm (9.315 in.)

Planform Geometry (Cranked TE Wing, W_1)

Wing area	0.348 m^2 (3.75 ft^2)
Aspect ratio	3.5
Wing span	110.424 cm (43.474 in.)
Leading-edge sweepback	40°
Trailing-edge sweepback	
Inboard	0°
Outboard	20.91°
Trailing-edge break span station	24.658 cm (9.708 in.)
Taper ratio	51.486 cm (20.270 in.)
Root chord	16.828 cm (6.625 in.)
Tip chord	30.785 cm (12.120 in.)
Chord at break station	34.686 cm (13.656 in.)
Mean aerodynamic chord	
Longitudinal location (fuselage station)	113.985 cm (44.876 in.)
Lateral location (span station)	22.634 cm (8.911 in.)
Airfoil section	
Root	64A205
Break point	64A205
Tip	64A205
Twist about trailing edge (linear element)	-4°
Incidence	0°

Body (B_2)

Length	177.80 cm (70.00 in.)
Maximum cross-sectional area (6.25 in. diameter)	197.94 cm^2 (30.68 $in.^2$)
Fineness ratio	11.20

Nacelle (N)

Length	64.52 cm (25.4 in.)
Width	9.843 cm (3.875 in.)
Height	8.13 cm (3.2 in.)

Table 2.- Canard Geometry Characteristics

	H_2	H_3
Panel area	0.065 m^2 (0.704 ft^2)	0.065 m^2 (704 ft^2)
Aspect ratio	2.5	2.1
Semispan	20.22 cm (7.961 in.)	18.54 cm (7.30 in.)
Leading-edge sweep	50°	55°
Trailing-edge sweep	18.2°	18.28°
Taper ratio	0.3	0.268
Root chord	24.884 cm (9.797 in.)	27.818 cm (10.952 in.)
Tip chord	7.465 cm (2.939 in.)	7.465 cm (2.939 in.)
Mean aerodynamic chord	17.740 cm (6.984 in.)	19.600 cm (7.716 in.)
Location of quarter chord		
y	20.063 cm (10.261 in.)	5.268 cm (9.948 in.)
x	95.072 cm (37.43 in.)	5.027 cm (37.79 in.)
Airfoil section	4% biconvex	4% biconvex

TABLE 3.- NASA/LANGLEY V/STOL TEST 204 RUN SCHEDULE

CONFIGURATION								TEST CONDITIONS									
BODY-WING-CANARD	NOZ	SWB NOZ	WING			CANARD		SCHEDULE	STATIC	C_T =0	C_T = .5	C_T = .9	C_T = 1.5	C_T = 2.0	VAR. C_T		REMARKS
			δ_{LE}	δ_{TEI}	δ_{TEO}	δ_c	δ_{TE}								α= 8°	α= 16°	
B_2	N_{1a}^a	OFF	OFF	OFF	OFF	OFF	OFF		28,111								LEFT ENGINE ONLY
									46,101								RIGHT ENGINE ONLY
									5,110								BOTH ENGINES
	N_{1e}^a	N_4							27								LEFT SPANWISE ONLY
									42								RIGHT SPANWISE ONLY
		N_{11}							26								LEFT SPANWISE ONLY
									41								RIGHT SPANWISE ONLY
		N_{21}							25								LEFT SPANWISE ONLY
									40								RIGHT SPANWISE ONLY
									20								BOTH SPANWISE
	N_{1b}^a	N_{4a}							24								LEFT SPANWISE ONLY
									39								RIGHT SPANWISE ONLY
	N_{1b}^a	OFF							29								LEFT ENGINE ONLY
	N_{1a}^b								80								LEFT ENGINE ONLY
									62								RIGHT ENGINE ONLY
	N_{1e}^b	OFF							79								LEFT ENGINE ONLY
									61								RIGHT ENGINE ONLY
									66								BOTH ENGINES

TABLE 3.- CONTINUED.

NASA/LANGLEY V/STOL TEST 204 RUN SCHEDULE

CONFIGURATION								TEST CONDITIONS									
BODY-WING-CANARD	NOZ	SWB NOZ	WING			CANARD		SCHEDULE	STATIC	$C_T = 0$	$C_T = .5$	$C_T = .9$	$C_T = 1.5$	$C_T = 2.0$	VAR. C_T		REMARKS
			δ_{LE}	δ_{TEI}	δ_{TEO}	δ_c	δ_{TE}								$\alpha = 8^\circ$	$\alpha = 16^\circ$	
B_2	N_{20a}	OFF	OFF	OFF	OFF	OFF	OFF		90								LEFT ENGINE ONLY
									98								RIGHT ENGINE ONLY
									95								BOTH ENGINES
	N_{20b}								91								LEFT ENGINE ONLY
									99								RIGHT ENGINE
									94								BOTH ENGINES
	N_{22}								92								LEFT ENGINE ONLY
									100								RIGHT ENGINE ONLY
									96								BOTH ENGINES
	N_{1e}[a]	N_{11}							115								LEFT SPANWISE ONLY

TABLE 3.- CONTINUED.

NASA/LANGLEY V/STOL TEST 204 RUN SCHEDULE

CONFIGURATION								TEST CONDITIONS									
BODY-WING-CANARD	NOZ	SWB NOZ	WING δ_{LE}	WING δ_{TEI}	WING δ_{TEO}	CANARD δ_C	CANARD δ_{TE}	SCHEDULE	STATIC	C_T =0	C_T = .5	C_T = .9	C_T = 1.5	C_T = 2.0	VAR. C_T α= 8°	VAR. C_T α= 16°	REMARKS
$B_2W_1H_3$ [a]	N_{1a} [a]	OFF	0	0	0	0	0	A	497	478	480	481	482	483	484	-	BASELINE C_T = .2 RUN 154
								A, C	152, 258	153, 257	156, 259	157, 260	158, 261	159, 262			
				15	15			A	401, 456	400, 454	457	402, 458	459	403, 460	461	-	
								B, C	162, 247	163, 253	164, 248	165, 249	166, 250	167, 251	-	-	
	N_{1f} [a]			30	30			A	493	492	494	495	496	497	498	-	
								B	169, 186	168, 185	170, 187	188	172, 189	171, 190	-	-	
				0	0			A	279	278	280	281	282	283	284	-	OFF-DESIGN RAMP
								C	279	278	280	281	282	283		-	
				15	15			A	286	285	287	288	289	290	291	-	
								C	286	285	287	288	289	290		-	
	N_{1a} [a]			30	30			A	486	485	487	488	489	490	491	-	
								C	241, 272	240, 271	242, 273	243, 274	244, 275	245, 276	-	-	
	N_{1e} [a]	N_{11}		0	0			A	302	301	303	304	305	306	307	-	SPANWISE BLOWING
								C	302	301	303	304	305	306		-	
				15	15			A	335, 340, 342	334, 341	336, 343	337, 344	338, 345	339, 346	298, 347	299	
								C	335, 340, 342	334, 341	336, 343	337, 345	338, 345	339, 346	-	-	
				30	30			A	309	308	310	311	312	313	314	-	
								C	309	308	310	311	312	313		-	
		N_{21}		0	0			A	357	356	358	359	360	361	362	-	
								D	357	356	358	359	360	361		-	
				15	15			A	350	348, 349	351	352	353	354	355	-	
								D	350	348	351	352	353	354		-	
				30	30			A	364, 365	363	366	367	368	369	370	-	
								D	364	363	366	367	368	369		-	
		N_4		15	15			A	439, 440	438	441	442	-	443	-	-	
								D	439	438	441	442	-	443	-	-	
	N_{1b} [a]	N_{4a}						A	445	444	446	447	-	448	-	-	
								D	445	444	446	447	-	448	-	-	
	N_{1a} [b]	OFF		N/A	0			A	596	595	597	598	599	600	601	-	AFT NOZZLES
								D	596	595	597	598	599	600		-	
					15			A	604	602, 603	605	606	607	608	609	-	
								D	604	602, 603	605	606	607	608	-	-	
					30			A	611	610	612	613	614	615	616	-	
								D	611	610	612	613	614	615	-	-	
	N_{1e} [b]	N_{11}			0			A	626	624, 625	627	628	629	630	631	-	
								D	626	624, 625	627	628	629	630	-	-	

TABLE 3.- CONTINUED.

NASA/LANGLEY V/STOL TEST 204 RUN SCHEDULE

CONFIGURATION								TEST CONDITIONS									
BODY-WING-CANARD	NOZ	SWB NOZ	WING δ_{LE}	WING δ_{TEI}	WING δ_{TEO}	CANARD δ_c	CANARD δ_{TE}	SCHEDULE	STATIC	$C_T = 0$	$C_T = .5$	$C_T = .9$	$C_T = 1.5$	$C_T = 2.0$	VAR. C_T $\alpha = 8^\circ$	VAR. C_T $\alpha = 16^\circ$	REMARKS
$B_2W_1H_3$ [a]	N_{1e} [b]	N_{11}	0	N/A	15	0	0	A	633	632	634	635	636	637	638	-	AFT NOZZLES (CONTINUED)
								D	633	632	634	635	636	637		-	
					30			A	618	617	619	620	621	622	623	-	
								D	618	617	619	620	621	622	-	-	
		OFF			15			A	639								
									639								
$B_2W_1H_3$ [a]	N_{22}	OFF	0	OFF	15			A	640								ALTERNATE NOZZLES
									640								
				15	15			A	642	641	643	644	645	646	647	-	
								D	642	641	643	644	645	646		-	
	N_{20a}			N/A	15			A	649	648	650	651	652, 653	654, 656	655,657	-	
								D	649	648	650	651	652, 653	654, 656	-	-	
	N_{20b}			N/A	15			A	659	658	660	661	662	663	654	-	
								D	659	658	660	661	662	663	-	-	
	N_{13}			OFF	15			A	665								
									665								
				15	15			A	668	666, 667	669	670	671	672	673		
								C	668	666, 667	669	670	671	672			
$B_2W_1H_2$ [a]	N_{1f} [a]			30	30			A		507	508	509	510	511			ALTERNATE CANARD
								C		216	217	218	219	220			
							30	A	501	500	502	503	504	505	506		
								C	-	221	222	223	224	225			
B_2W_1	N_{1a} [a]			0	0	OFF	OFF	A		532	533	534	535	536	537		
								D		532	533	534	535	536			CANARD OFF
				15	15			A		538, 545	539	540, 546	541	544, 547	543		
								D		538, 545	539	540	541	542, 544	-		
$B_2W_1H_3$ [a]						-20	0	A	463	462	464	465	466	467	468		CANARD DEFLECTIONS
								NONE									
						+20		A		469, 470	473	474	475	476	477		
								NONE									
	N_{1e} [a]	N_{11}				-20		A		560	561	562	563	564			
								D		560	561	562	563	564			
						+20		A		554	555	556	557	558	559		
								D		554	555	556	557	558			
	N_{1f} [a]	OFF	20	30	30	0		A		512	513	514	515	516			
								NONE		-	-	-	-	-			WING L. E. DEFLECTION

TABLE 3.- CONTINUED.

NASA/LANGLEY V/STOL TEST 204 RUN SCHEDULE

CONFIGURATION								TEST CONDITIONS									
BODY-WING-CANARD	NOZ	SWB NOZ	WING δ_{LE}	WING δ_{TEI}	WING δ_{TEO}	CANARD δ_c	CANARD δ_{TE}	SCHEDULE	STATIC	$C_T = 0$	$C_T = .5$	$C_T = .9$	$C_T = 1.5$	$C_T = 2.0$	VAR. C_T $\alpha = 8°$	VAR. C_T $\alpha = 16°$	REMARKS
$B_2W_1H_3^a$	N_{1f}^a	OFF	20	30	30	20	0	A		521,522	517	518,523	519	520,524			WING L. E. DEFLECTION
								NONE	-	-	-	-	-	-	-		
	N_{1a}^a		0	15	15	0		A		548	549	550	551	552	553		STRAKE OFF
								NONE		-	-	-	-	-	-		
$B_2H_3^a$			OFF	OFF	OFF			A		583							WING OFF
								NONE		-							
						20				584							
										-							
						-20				585							
										-							
B_2						OFF	OFF	A	587, 588	586	589	590	591	592	593		WING & CANARD OFF
									-	-	-	-	-	-	-		
	$N_1^aX_2$	N_{11}						A	582								R.H. NOZZLE CAPPED C_T ADJ. TO OBTAIN FLOW CONSISTENT WITH OTHER RUNS
$B_2W_1H_3^a$	N_{1e}^a		0	15	15	0	0	A	566	565	569	570	571	572	573		
									-	-	-	-	-	-	-		
	$N_1^aX_2$							A	574								
									-								
	N_{1a}^a	OFF		LH = -25 RH = +30				A	576	575	577	578	579	580	581		
									-	-	-	-	-	-	-		
				OFF	OFF				395								MISC. STATIC RUNS
									-								
	N_{1f}^a								396								
									-								
	N_{1e}^a								397								
									-								
				15	15				398								
									-								
	N_{1f}^a			15	15				399								
									-								
	N_{1b}^a			OFF	OFF				472								
									-								
	N_{1f}^a			OFF	30			A	526	525	527	528	529	530	531		WING T.E. OFF
								D	-	-	527	528	529	530	531		
	N_{1e}^a	N_{11}		0	OFF				300								
									300								

TABLE 3.- CONTINUED.

NASA/LANGLEY V/STOL TEST 204 RUN SCHEDULE

CONFIGURATION								TEST CONDITIONS									
BODY-WING-CANARD	NOZ	SWB NOZ	WING δ_{LE}	WING δ_{TEI}	WING δ_{TEO}	CANARD δ_c	CANARD δ_{TE}	SCHEDULE	STATIC	C_T =0	C_T = .5	C_T = .9	C_T = 1.5	C_T = 2.0	VAR. C_T α= 8°	VAR. C_T α= 16°	REMARKS
$B_2W_1H_3$ [a]	N_{1e} [a]	N_{11}	0	30	30	0	0		315 –		316 316						GROUND EFFECTS α = 0, h = 5"
											317 –						h = 10"
											318 –						h = 15"
											319 –						h = 20
											320 –						h = 25
											321 –						h = 30
											322 –						α = 8°, h = 10"
											323 –						h = 15"
											324 –						h = 20"
											325 –						h = 25"
										326 –	327 –	328 –		329 –			α = 4°, h = VAR
										330 –	331 –	332 –		333 –			α =12°, h = VAR
	N_{1f} [a]	OFF				-20		B		191/196	192	193	194	195			MISC. PRESSURE RUNS
						+20		B		197	198	199	200	201			
			+20					B		202	203	204	205	206			
						0		B		207	208	209	210	211			
			0					C		227	228	229	230	231			STRAKE OFF
						OFF	OFF	C		234	235	236	237	238			CANARD OFF

TABLE 3.- CONCLUDED.

NASA/LANGLEY V/STOL TEST 204 RUN SCHEDULE

CONFIGURATION								TEST CONDITIONS									
BODY-WING-CANARD	NOZ	SWB NOZ	WING δ_{LE}	WING δ_{TEI}	WING δ_{TEO}	CANARD δ_c	CANARD δ_{TE}	SCHEDULE	STATIC	C_T =0	C_T = .1	C_T = .2	C_T = .4	C_T = .5	VAR. C_T α= 8°	VAR. C_T α= 16°	REMARKS
$B_2W_1H_3$ [a]	N_1 [a] X_2	N_{11}	0	0	0	0	0	A	425	424	426	427	428	429	430	431	SPANWISE BLOWING ONLY
								D	425	424	426	427	428	429	-	-	
				15	15			A	405	404	410	411	412	413	414	415	
								D	405	404	406, 410	407, 411	408	409	-	-	
				30	30			A	417	416	418	419	420	421	422	423	
								D					420	421	-	-	
		N_{21}		0	0			A	388	387	389	390	391	392	393	394	
								D	388	387	389	390	391	392	-	-	
				15	15			A	380	379	381	382	383	384	385	386	
								D	380	379	381	382	383	384	-	-	
				30	30			A	372	371	373	374	385	376	377	378	
								D	372	371	373	374	375	376	-	-	
		N_4		0	0			A		432							
								D		432							
				15	15			A	434	433	435	436	-	437	-	-	
									434	433	-	-	-	-	-	-	
		N_{4a}						A	450	449	451	452	-	453	-	-	
								A	450	-	451	452	-	453	-	-	

The angle of attack schedules are:

A, α = -4, -2, 0, 2, 4, 6, 8, 10, 12, 14, 16, 20, 24 (degrees)

B, α = 0, 4, 8, 12, 16, 20, (degrees)

C, α = 4, 12, 16, 20 (degrees)

D, α = 12, 16, 20, 24 (degrees)

TABLE 4.-

STATIC DATA FOR THE VEO-WING 1/10-SCALE RESEARCH MODEL, VSTOL TEST NO. 204

ALPHA	NPR	NPRS	NPRTOT	TOH	THETAJ
RUN = 1					
12.55	1.00	1.00	0.00	.04	31.99
12.55	1.00	1.00	0.00	.05	1.84
12.55	1.00	1.00	0.00	.00	12.05
12.55	1.00	1.00	0.00	.04	15.04
12.55	1.00	1.00	0.00	.08	8.46
12.55	1.00	1.00	0.00	.13	19.38
12.55	1.00	1.00	0.00	.15	8.83
12.55	1.00	1.00	0.00	.20	15.72
12.55	1.00	1.00	0.00	.22	11.38
12.55	1.00	1.00	0.00	.26	10.02
12.55	1.00	1.00	0.00	.30	12.54
12.55	1.00	1.00	0.00	.32	9.80
12.55	1.00	1.00	0.00	.35	8.95
RUN = 2					
12.55	1.00	1.00	0.00	.04	14.96
12.55	1.00	1.00	0.00	.08	8.93
12.55	1.00	1.00	0.00	.12	10.75
12.55	1.00	1.00	0.00	.16	8.67
12.55	1.00	1.00	0.00	.19	10.37
12.55	1.00	1.00	0.00	.22	6.58
12.55	1.00	1.00	0.00	.26	10.03
12.55	1.00	1.00	0.00	.29	8.97
12.55	1.00	1.00	0.00	.33	11.49
12.55	1.00	1.00	0.00	.35	9.17
RUN = 3					
-1.10	1.00	1.00	1.00	.01	-19.48
-1.10	1.01	1.00	1.01	.35	-12.96
-1.10	1.07	1.00	1.07	1.07	-15.92
-1.10	1.31	1.00	1.31	3.60	-16.33
-1.10	1.87	1.00	1.87	8.02	-20.11
-1.10	2.46	1.00	2.46	12.74	-20.68
-1.10	3.10	1.00	3.10	17.98	-20.92
RUN = 4					
-1.11	1.00	1.00	1.00	.02	-52.45
-1.11	1.01	1.00	1.01	.34	-21.13
-1.11	1.07	1.00	1.07	1.04	-17.15
-1.11	1.31	1.00	1.31	3.56	-16.31
-1.11	1.86	1.00	1.86	7.88	-20.11
-1.11	2.46	1.00	2.46	12.72	-21.09
-1.11	3.03	1.00	3.03	17.48	-20.86
-1.11	3.62	1.00	3.62	22.51	-21.25

TABLE 4.- CONTINUED.

STATIC DATA FOR THE VEO-WING 1/10-SCALE RESEARCH MODEL, VSTOL TEST NO. 204

ALPHA	NPR	NPRS	NPRTOT	TOH	THETAJ
RUN = 5					
-1.11	1.00	1.00	.99	.03	35.72
-1.11	1.00	1.00	1.00	.38	-11.26
-1.11	1.05	1.00	1.05	1.09	-13.96
-1.11	1.27	1.00	1.27	3.58	-15.68
-1.11	1.81	1.00	1.81	7.98	-18.51
-1.11	2.39	1.00	2.39	12.97	-20.41
-1.11	2.95	1.00	2.95	17.89	-20.67
-1.11	3.54	1.00	3.54	23.11	-20.34
-1.11	3.70	1.00	3.70	24.49	-19.78
RUN = 6					
-1.11	1.00	1.00	1.00	.03	-67.88
-1.11	1.01	1.00	1.01	.34	-20.19
-1.11	1.07	1.00	1.07	1.07	-19.54
-1.11	1.31	1.00	1.31	3.79	-15.75
-1.11	1.80	1.00	1.80	7.94	-20.07
-1.11	2.35	1.00	2.35	12.74	-22.27
-1.11	2.92	1.00	2.92	17.76	-25.14
-1.11	3.51	1.00	3.51	22.93	-23.83
RUN = 7					
-1.10	1.00	1.00	1.00	.05	45.08
-1.10	1.02	1.00	1.02	.44	-16.68
-1.10	1.10	1.00	1.10	1.23	-18.33
-1.10	1.69	1.00	1.69	4.80	-21.84
-1.10	2.46	1.00	2.46	9.62	-25.59
-1.10	3.24	1.00	3.24	14.42	-25.23
-1.10	3.98	1.00	3.98	19.21	-25.87
-1.10	4.75	1.00	4.75	24.25	-24.92
RUN = 8					
-1.10	1.00	1.00	1.00	.03	76.32
-1.10	1.02	1.00	1.02	.35	-18.83
-1.10	1.08	1.00	1.08	1.15	-18.41
-1.10	1.45	1.00	1.45	4.11	-15.80
-1.10	2.10	1.00	2.10	8.62	-22.18
-1.10	2.79	1.00	2.79	13.56	-22.98
-1.10	3.44	1.00	3.44	18.37	-22.82
-1.10	4.05	1.00	4.05	22.90	-23.24

TABLE 4.- CONTINUED.

STATIC DATA FOR THE VEO-WING 1/10-SCALE RESEARCH MODEL, VSTOL TEST NO. 204

ALPHA	NPR	NPRS	NPRTOT	TOH	THETAJ
RUN = 9					
-1.11	1.00	1.00	1.00	.02	50.83
-1.11	1.01	1.00	1.01	.35	-15.76
-1.11	1.08	1.00	1.08	1.18	-18.22
-1.10	1.19	1.00	1.19	2.33	-16.84
-1.10	1.44	1.00	1.44	4.09	-15.63
-1.10	1.76	1.00	1.76	6.24	-17.12
-1.10	2.09	1.00	2.09	8.68	-22.12
-1.10	2.41	1.00	2.41	11.03	-22.78
-1.10	2.76	1.00	2.76	13.63	-22.77
-1.10	3.08	1.00	3.08	16.04	-21.16
-1.10	3.38	1.00	3.38	18.28	-22.55
-1.11	3.73	1.00	3.73	20.93	-23.38
-1.11	4.02	1.00	4.02	23.05	-22.60
RUN = 10					
-1.10	1.00	1.00	1.00	.02	33.29
-1.10	1.10	1.00	1.10	2.05	3.86
-1.10	1.07	1.00	1.07	.98	-18.80
-1.10	1.16	1.00	1.16	1.70	-21.39
-1.10	1.36	1.00	1.36	3.72	-16.66
-1.10	1.66	1.00	1.66	5.82	-15.69
-1.10	1.96	1.00	1.96	8.17	-19.77
-1.10	2.27	1.00	2.27	10.62	-20.04
-1.10	2.58	1.00	2.58	13.04	-20.41
-1.10	2.90	1.00	2.90	15.56	-20.12
-1.10	3.17	1.00	3.17	17.63	-19.82
-1.10	3.52	1.00	3.52	20.37	-20.82
-1.10	3.77	1.00	3.77	22.40	-20.77
RUN = 11					
-1.10	1.00	1.00	1.00	.02	65.35
-1.10	1.26	1.00	1.26	5.29	1.70
-1.10	1.10	1.00	1.10	1.22	-19.39
-1.10	1.31	1.00	1.31	2.63	-19.40
-1.10	1.67	1.00	1.67	4.73	-21.82
-1.10	2.07	1.00	2.07	7.25	-25.15
-1.10	2.47	1.00	2.47	9.74	-25.78
-1.10	2.81	1.00	2.81	11.84	-24.46
-1.10	3.22	1.00	3.22	14.44	-24.96
-1.10	3.60	1.00	3.60	16.91	-24.48
-1.10	3.98	1.00	3.98	19.32	-25.97
-1.10	4.39	1.00	4.39	22.01	-25.53
-1.10	4.72	1.00	4.72	24.18	-24.92

TABLE 4.- CONTINUED.

STATIC DATA FOR THE VEO-WING 1/10-SCALE RESEARCH MODEL, VSTOL TEST NO. 204

ALPHA	NPR	NPRS	NPRTOT	TOH	THETAJ
RUN = 12					
-1.10	1.00	1.00	1.00	.02	18.58
-1.10	1.07	1.00	1.05	1.06	-16.76
-1.10	1.14	1.08	1.12	1.95	-16.32
-1.10	1.30	1.24	1.28	3.42	-15.76
-1.10	1.55	1.50	1.54	5.39	-14.24
-1.10	1.83	1.78	1.82	7.55	-18.22
-1.10	2.10	2.05	2.09	9.87	-19.17
-1.10	2.39	2.33	2.37	12.16	-19.54
-1.10	2.67	2.59	2.65	14.45	-19.91
-1.10	2.98	2.88	2.95	16.96	-18.71
-1.10	3.27	3.17	3.25	19.37	-19.53
-1.10	3.56	3.46	3.54	21.78	-19.83
RUN = 13					
-1.10	1.00	1.00	1.00	.01	52.16
-1.10	1.08	1.00	1.06	1.06	-19.11
-1.10	1.16	1.11	1.15	1.97	-15.92
-1.10	1.31	1.29	1.31	3.39	-14.55
-1.10	1.54	1.54	1.54	5.23	-13.22
-1.10	1.84	1.84	1.84	7.44	-16.19
-1.10	2.11	2.12	2.11	9.66	-20.58
-1.10	2.38	2.39	2.38	11.78	-21.03
-1.10	2.67	2.68	2.67	14.08	-20.43
-1.10	2.92	2.93	2.93	16.19	-19.73
-1.10	3.22	3.22	3.22	18.59	-19.93
-1.10	3.51	3.51	3.51	20.90	-21.06
RUN = 14					
-1.10	1.00	1.00	1.00	.04	-76.54
-1.10	1.10	1.00	1.07	1.15	-19.55
-1.10	1.17	1.15	1.17	2.03	-14.81
-1.10	1.33	1.34	1.33	3.48	-13.59
-1.10	1.57	1.60	1.57	5.34	-12.22
-1.10	1.83	1.87	1.84	7.40	-16.33
-1.10	2.11	2.17	2.13	9.71	-19.36
-1.10	2.38	2.44	2.40	11.83	-19.26
-1.10	2.67	2.74	2.69	14.17	-18.89
-1.10	2.95	3.02	2.97	16.40	-20.29
-1.10	3.23	3.30	3.25	18.68	-19.00
-1.10	3.52	3.59	3.54	20.98	-19.05

TABLE 4.- CONTINUED.

STATIC DATA FOR THE VEO-WING 1/10-SCALE RESEARCH MODEL, VSTOL TEST NO. 204

ALPHA	NPR	NPRS	NPRTOT	TOH	THETAJ
RUN = 15					
-1.10	1.00	1.00	1.00	.02	18.35
-1.10	1.10	1.00	1.07	1.15	-20.56
-1.10	1.17	1.13	1.16	1.98	-16.77
-1.10	1.34	1.34	1.34	3.44	-14.80
-1.10	1.58	1.60	1.59	5.21	-13.39
-1.10	1.86	1.88	1.86	7.24	-19.18
-1.10	2.14	2.17	2.15	9.39	-21.35
-1.10	2.43	2.47	2.44	11.57	-21.49
-1.10	2.73	2.77	2.74	13.74	-20.75
-1.10	3.04	3.08	3.05	15.98	-22.03
-1.10	3.31	3.36	3.33	17.99	-20.55
-1.10	3.57	3.62	3.58	19.87	-21.16
RUN = 16					
-1.10	1.00	1.00	1.00	.02	62.76
-1.10	1.10	1.02	1.08	1.08	-19.26
-1.10	1.17	1.12	1.16	1.89	-16.39
-1.10	1.33	1.33	1.33	3.29	-14.75
-1.10	1.58	1.60	1.59	5.11	-13.69
-1.10	1.83	1.86	1.84	6.96	-17.52
-1.10	2.11	2.14	2.12	9.10	-20.51
-1.10	2.40	2.44	2.41	11.28	-20.61
-1.10	2.68	2.73	2.69	13.41	-20.37
-1.10	2.97	3.02	2.98	15.61	-21.30
-1.10	3.25	3.30	3.26	17.76	-20.13
-1.10	3.51	3.56	3.52	19.79	-19.73
RUN = 17					
-1.10	1.00	1.00	1.00	.01	-80.23
-1.10	1.00	2.53	2.53	2.64	.60
-1.10	1.00	3.39	3.39	4.01	1.09
-1.10	1.00	4.40	4.40	5.57	1.10
-1.10	1.00	5.44	5.44	7.19	1.01
-1.10	1.00	1.50	1.50	.99	.55

TABLE 4.- CONTINUED.

STATIC DATA FOR THE VEO-WING 1/10-SCALE RESEARCH MODEL, VSTOL TEST NO. 204

ALPHA	NPR	NPRS	NPRTOT	TOH	THETAJ
RUN = 18					
-1.10	1.00	1.00	1.00	.02	68.31
-1.10	1.00	1.28	1.28	.45	-2.90
-1.10	1.00	1.62	1.62	.98	-2.19
-1.10	1.00	2.17	2.17	1.75	-.47
-1.10	1.00	2.71	2.71	2.45	-.96
-1.10	1.00	3.27	3.27	3.05	-.91
-1.10	1.00	3.89	3.89	3.65	-.58
-1.10	1.00	4.47	4.47	4.22	-.15
-1.10	1.00	5.01	5.01	4.72	-.21
-1.10	1.00	5.55	5.55	5.24	-.03
-1.10	1.00	6.07	6.07	5.74	-.17
RUN = 19					
-1.10	1.00	1.00	1.00	.01	-45.37
-1.10	1.00	1.19	1.19	.32	-6.99
-1.10	1.00	1.53	1.53	.85	-3.76
-1.10	1.00	2.03	2.03	1.58	-2.93
-1.10	1.00	2.53	2.53	2.22	-3.05
-1.10	1.00	3.07	3.07	2.83	-2.52
-1.10	1.00	3.64	3.64	3.38	-2.40
-1.10	1.00	4.17	4.17	3.89	-2.18
-1.10	1.00	4.74	4.74	4.43	-2.01
-1.10	1.00	5.25	5.25	4.93	-1.63
RUN = 20					
-1.10	1.00	1.00	1.00	.01	29.88
-1.10	1.00	1.22	1.22	.46	1.09
-1.10	1.00	1.62	1.62	1.20	.04
-1.10	1.00	2.08	2.08	2.04	.11
-1.10	1.00	2.62	2.62	3.05	.32
-1.10	1.00	3.15	3.15	3.99	-.14
-1.10	1.00	3.75	3.75	4.97	-.55
-1.10	1.00	4.25	4.25	5.75	-.55
-1.10	1.00	4.79	4.79	6.56	-.56
-1.10	1.00	5.31	5.31	7.31	-.72

TABLE 4.- CONTINUED.

STATIC DATA FOR THE VED-WING 1/10-SCALE RESEARCH MODEL, VSTOL TEST NO. 204

ALPHA	NPR	NPRS	NPRTOT	TOH	THETAJ
RUN = 21					
-1.10	1.00	1.03	1.03	.92	-1.02
-1.10	1.00	1.23	1.23	.21	2.59
-1.10	1.00	1.46	1.46	.41	1.31
-1.10	1.00	1.79	1.79	.67	-1.26
-1.10	1.00	2.12	2.12	.93	-1.78
-1.10	1.00	2.50	2.50	1.22	-.14
-1.10	1.00	2.83	2.83	1.47	.51
-1.10	1.00	3.21	3.21	1.76	1.31
-1.10	1.00	3.54	3.54	2.03	1.07
-1.10	1.00	3.91	3.91	2.31	1.57
-1.10	1.00	4.27	4.27	2.59	.90
-1.10	1.00	4.63	4.63	2.89	1.11
-1.10	1.00	4.92	4.92	3.14	1.00
RUN = 22					
-1.10	1.00	1.00	1.00	.03	74.52
-1.10	1.00	1.43	1.43	.20	3.34
-1.10	1.00	1.97	1.97	.42	2.43
-1.10	1.00	2.46	2.46	.60	3.38
-1.10	1.00	3.07	3.07	.83	1.65
-1.10	1.00	3.54	3.54	1.00	1.26
-1.10	1.00	4.14	4.14	1.21	.86
-1.10	1.00	4.63	4.63	1.40	1.49
-1.10	1.00	5.21	5.21	1.63	1.91
RUN = 23					
-1.10	1.00	1.00	1.00	.03	33.84
-1.10	1.00	1.40	1.40	.13	-15.82
-1.10	1.00	1.68	1.68	.18	-11.12
-1.10	1.00	1.94	1.94	.24	-13.34
-1.10	1.00	2.15	2.15	.30	-16.87
-1.10	1.00	2.40	2.40	.34	-14.98
-1.10	1.00	2.70	2.70	.40	-14.11
-1.10	1.00	3.03	3.03	.46	-12.33
-1.10	1.00	3.24	3.24	.51	-15.83
-1.10	1.00	3.62	3.62	.58	-14.02
-1.10	1.00	3.87	3.87	.63	-13.65
-1.10	1.00	4.16	4.16	.69	-14.27
-1.10	1.00	4.38	4.38	.73	-13.47
-1.10	1.00	4.65	4.65	.79	-13.89
-1.10	1.00	4.96	4.96	.86	-14.92

TABLE 4.- CONTINUED.

STATIC DATA FOR THE VEO-WING 1/10-SCALE RESEARCH MODEL,VSTOL TEST NO. 204

ALPHA	NPR	NPRS	NPRTOT	TOH	THETAJ
RUN = 24					
-1.10	1.00	1.00	1.00	.01	-86.16
-1.10	1.00	1.22	1.22	.11	-19.42
-1.10	1.00	1.48	1.48	.23	-27.40
-1.10	1.00	1.81	1.81	.36	-20.73
-1.10	1.00	2.11	2.11	.50	-21.03
-1.10	1.00	2.49	2.49	.64	-19.17
-1.10	1.00	2.84	2.84	.77	-19.81
-1.11	1.00	3.19	3.19	.91	-18.90
-1.10	1.00	3.21	3.21	.91	-18.79
-1.10	1.00	3.62	3.62	1.07	-17.72
-1.10	1.00	4.00	4.00	1.22	-18.35
-1.10	1.00	4.36	4.36	1.35	-18.33
-1.10	1.00	4.76	4.76	1.52	-18.30
-1.10	1.00	5.08	5.08	1.64	-18.10
RUN = 25					
-1.10	1.00	1.00	1.00	.01	-33.93
-1.10	1.00	1.23	1.23	.28	-16.25
-1.10	1.00	1.62	1.62	.66	-14.08
-1.10	1.00	2.12	2.12	1.16	-16.71
-1.10	1.00	2.65	2.65	1.69	-17.08
-1.10	1.00	3.19	3.19	2.20	-17.98
-1.10	1.00	3.77	3.77	2.70	-17.49
-1.10	1.00	4.29	4.29	3.15	-17.79
-1.10	1.00	4.84	4.84	3.59	-17.76
-1.10	1.00	5.22	5.22	3.91	-18.26
RUN = 26					
-1.10	1.00	1.00	1.00	.02	44.59
-1.10	1.00	1.20	1.20	.19	-17.10
-1.10	1.00	1.55	1.55	.50	-20.98
-1.10	1.00	2.02	2.02	.87	-20.92
-1.10	1.00	2.57	2.57	1.26	-22.99
-1.10	1.00	3.13	3.13	1.59	-22.83
-1.10	1.00	3.65	3.65	1.88	-22.86
-1.10	1.00	4.21	4.21	2.17	-22.24
-1.10	1.00	4.75	4.75	2.46	-22.47
-1.10	1.00	5.19	5.19	2.70	-22.22

TABLE 4.- CONTINUED.

STATIC DATA FOR THE VEO-WING 1/10-SCALE RESEARCH MODEL, VSTOL TEST NO. 204

ALPHA	NPR	NPRS	NPRTOT	TOH	THETAJ
RUN = 27					
-1.10	1.00	1.00	1.00	.01	-37.35
-1.10	1.00	1.20	1.20	.22	-20.34
-1.10	1.00	1.52	1.52	.53	-19.87
-1.10	1.00	1.90	1.90	.87	-20.48
-1.10	1.00	2.42	2.42	1.31	-20.97
-1.10	1.00	2.92	2.92	1.71	-20.21
-1.10	1.00	3.44	3.44	2.14	-19.56
-1.10	1.00	3.96	3.96	2.57	-19.75
-1.10	1.00	4.45	4.45	2.97	-19.35
-1.10	1.00	4.98	4.98	3.40	-19.35
RUN = 28					
-1.10	1.00	1.00	1.00	.02	-37.88
-1.10	1.08	1.00	1.08	.63	-28.48
-1.11	1.15	1.00	1.15	1.15	-28.03
-1.11	1.33	1.00	1.33	2.13	-26.31
-1.11	1.61	1.00	1.61	3.30	-27.08
-1.11	1.87	1.00	1.87	4.49	-29.58
-1.11	2.17	1.00	2.17	5.87	-30.17
-1.10	2.46	1.00	2.46	7.21	-30.12
-1.11	2.77	1.00	2.77	8.65	-29.17
-1.11	3.05	1.00	3.05	9.93	-30.64
-1.11	3.33	1.00	3.33	11.25	-30.69
-1.11	3.66	1.00	3.66	12.84	-29.64
RUN = 29					
-1.11	1.00	1.00	1.00	.01	30.48
-1.11	1.09	1.00	1.09	.64	-29.75
-1.11	1.22	1.00	1.22	1.38	-26.22
-1.11	1.50	1.00	1.50	2.43	-24.94
-1.11	1.84	1.00	1.84	3.72	-30.50
-1.10	2.17	1.00	2.17	5.02	-31.56
-1.11	2.49	1.00	2.49	6.25	-31.62
-1.11	2.85	1.00	2.85	7.67	-31.37
-1.11	3.18	1.00	3.18	8.99	-31.11
-1.11	3.51	1.00	3.51	10.33	-32.49
-1.10	3.86	1.00	3.86	11.76	-32.01
-1.10	4.18	1.00	4.18	13.01	-31.00

TABLE 4.- CONTINUED.

STATIC DATA FOR THE VEO-WING 1/10-SCALE RESEARCH MODEL,VSTOL TEST NO. 204

ALPHA	NPR	NPRS	NPRTOT	TOH	THETAJ
RUN = 30					
-1.11	1.00	1.00	1.00	.01	30.53
-1.11	1.08	1.00	1.08	.62	-30.06
-1.11	1.17	1.00	1.17	1.21	-29.41
-1.11	1.35	1.00	1.35	2.15	-25.85
-1.11	1.57	1.00	1.57	3.19	-25.91
-1.11	1.88	1.00	1.88	4.56	-30.08
-1.11	2.18	1.00	2.18	5.94	-31.15
-1.10	2.46	1.00	2.46	7.24	-31.73
-1.11	2.75	1.00	2.75	8.61	-32.15
-1.11	3.05	1.00	3.05	10.04	-34.42
-1.11	3.33	1.00	3.33	11.35	-33.86
-1.11	3.61	1.00	3.61	12.68	-32.59
RUN = 31					
-1.11	1.00	1.00	1.00	.03	67.62
-1.11	1.08	1.00	1.08	.61	-25.41
-1.11	1.16	1.00	1.16	1.17	-26.00
-1.11	1.40	1.00	1.40	2.19	-25.63
-1.11	1.70	1.00	1.70	3.33	-27.43
-1.11	2.02	1.00	2.02	4.75	-29.03
-1.11	2.37	1.00	2.37	6.19	-29.99
-1.11	2.65	1.00	2.65	7.38	-30.29
-1.11	2.98	1.00	2.98	8.71	-29.13
-1.11	3.28	1.00	3.28	10.00	-30.20
-1.11	3.59	1.00	3.59	11.36	-30.26
-1.10	3.93	1.00	3.93	12.87	-29.85
RUN = 32					
-1.11	1.00	1.00	1.00	.02	60.04
-1.10	1.13	1.00	1.13	.73	-30.73
-1.11	1.37	1.00	1.37	1.50	-28.09
-1.11	1.76	1.00	1.76	2.79	-32.92
-1.11	2.18	1.00	2.18	4.19	-33.53
-1.11	2.55	1.00	2.55	5.40	-34.39
-1.11	2.98	1.00	2.98	6.85	-34.15
-1.11	3.37	1.00	3.37	8.14	-33.05
-1.11	3.77	1.00	3.77	9.51	-34.06
-1.11	4.17	1.00	4.17	10.89	-34.46
-1.11	4.58	1.00	4.58	12.32	-33.78
-1.11	4.95	1.00	4.95	13.68	-33.15

TABLE 4.- CONTINUED.

STATIC DATA FOR THE VEO-WING 1/10-SCALE RESEARCH MODEL, VSTOL TEST NO. 204

ALPHA	NPR	NPRS	NPRTOT	TOH	THETAJ
RUN = 33					
-1.11	1.00	1.00	1.00	.02	-86.18
-1.11	1.11	1.02	1.08	.56	-29.27
-1.11	1.18	1.14	1.17	1.03	-26.43
-1.10	1.37	1.35	1.36	1.82	-25.49
-1.11	1.62	1.62	1.62	2.80	-25.69
-1.11	1.89	1.89	1.89	3.93	-30.79
-1.11	2.18	2.19	2.18	5.15	-31.21
-1.10	2.45	2.46	2.45	6.20	-31.68
-1.11	2.77	2.78	2.77	7.48	-31.22
-1.11	3.05	3.06	3.06	8.62	-32.38
-1.11	3.34	3.36	3.35	9.85	-31.40
-1.11	3.65	3.66	3.65	11.12	-31.68
RUN = 34					
-1.11	1.00	1.00	1.00	.02	85.01
-1.10	1.12	1.00	1.09	.64	-30.35
-1.11	1.18	1.15	1.17	1.05	-27.68
-1.11	1.35	1.35	1.35	1.83	-25.94
-1.11	1.62	1.64	1.63	2.85	-26.08
-1.11	1.90	1.92	1.90	4.02	-31.46
-1.11	2.19	2.22	2.19	5.20	-32.08
-1.11	2.48	2.51	2.48	6.34	-32.67
-1.11	2.79	2.83	2.80	7.56	-32.21
-1.11	3.08	3.13	3.10	8.73	-33.44
-1.11	3.37	3.42	3.38	9.88	-32.27
-1.11	3.65	3.70	3.67	11.01	-33.07
RUN = 35					
-1.11	1.00	1.00	1.00	.04	68.92
-1.11	1.12	1.00	1.09	.68	-25.76
-1.11	1.18	1.15	1.18	1.14	-23.39
-1.11	1.37	1.34	1.36	1.98	-23.58
-1.11	1.62	1.59	1.61	2.97	-23.64
-1.11	1.90	1.87	1.89	4.22	-29.49
-1.11	2.19	2.16	2.18	5.47	-30.06
-1.11	2.49	2.46	2.49	6.74	-30.59
-1.11	2.77	2.72	2.76	7.95	-30.03
-1.11	3.08	3.02	3.07	9.29	-31.25
-1.11	3.39	3.32	3.37	10.63	-30.22
-1.11	3.68	3.60	3.66	11.87	-31.15

TABLE 4.- CONTINUED.

STATIC DATA FOR THE VEO-WING 1/10-SCALE RESEARCH MODEL,VSTOL TEST NO. 204

ALPHA	NPR	NPRS	NPRTOT	TOH	THETAJ
RUN = 36					
-1.11	1.00	1.00	1.00	.02	85.31
-1.11	1.00	1.00	1.00	.02	-51.44
-1.11	1.08	1.00	1.06	.57	-29.70
-1.11	1.17	1.13	1.16	1.06	-27.03
-1.11	1.34	1.32	1.34	1.89	-26.17
-1.11	1.59	1.58	1.59	2.93	-24.34
-1.10	1.89	1.87	1.88	4.20	-30.41
-1.11	2.18	2.16	2.17	5.42	-30.81
-1.11	2.46	2.45	2.46	6.67	-31.18
-1.11	2.77	2.75	2.76	7.99	-31.12
-1.11	3.06	3.04	3.05	9.27	-30.24
-1.11	3.34	3.32	3.34	10.54	-31.52
-1.11	3.64	3.62	3.64	11.89	-31.89
RUN = 37					
-1.11	1.00	1.00	1.00	.02	-57.79
-1.11	1.09	1.00	1.07	.56	-26.75
-1.11	1.18	1.10	1.16	1.07	-26.73
-1.11	1.38	1.29	1.36	1.89	-25.80
-1.11	1.69	1.62	1.67	3.00	-26.93
-1.11	2.04	1.96	2.02	4.32	-28.45
-1.11	2.38	2.30	2.36	5.64	-29.18
-1.11	2.72	2.62	2.70	6.93	-29.61
-1.11	3.06	2.95	3.03	8.22	-29.89
-1.11	3.40	3.28	3.37	9.53	-29.31
-1.11	3.75	3.62	3.72	10.90	-30.16
-1.11	4.08	3.94	4.05	12.21	-29.83
RUN = 38					
-1.11	1.00	1.00	1.00	.01	62.61
-1.10	1.00	1.45	1.45	.12	21.54
-1.11	1.00	1.71	1.71	.17	21.72
-1.11	1.00	1.94	1.94	.23	23.29
-1.11	1.00	2.18	2.18	.27	17.91
-1.10	1.00	2.47	2.47	.34	20.96
-1.11	1.00	2.74	2.74	.38	18.40
-1.11	1.00	2.99	2.99	.45	19.29
-1.11	1.00	3.30	3.30	.50	20.63
-1.10	1.00	3.62	3.62	.56	18.39
-1.10	1.00	3.82	3.82	.61	19.78
-1.10	1.00	4.05	4.05	.65	19.36
-1.10	1.00	4.41	4.41	.73	19.46
-1.11	1.00	4.69	4.69	.78	18.88
-1.11	1.00	4.96	4.96	.83	19.01

TABLE 4.- CONTINUED.

STATIC DATA FOR THE VEO-WING 1/10-SCALE RESEARCH MODEL,VSTOL TEST NO. 204

ALPHA	NPR	NPRS	NPRTOT	TOH	THETAJ
RUN = 39					
-1.10	1.00	1.00	1.00	.02	58.57
-1.11	1.00	1.23	1.23	.13	28.32
-1.11	1.00	1.45	1.45	.21	19.76
-1.11	1.00	1.80	1.80	.39	23.97
-1.11	1.00	2.11	2.11	.52	23.53
-1.11	1.00	2.46	2.46	.66	22.77
-1.11	1.00	1.76	1.76	.38	22.95
-1.11	1.00	2.13	2.13	.54	23.50
-1.11	1.00	2.50	2.50	.66	19.80
-1.11	1.00	2.84	2.84	.81	20.29
-1.11	1.00	3.28	3.28	.98	20.76
-1.11	1.00	3.62	3.62	1.14	20.93
-1.10	1.00	4.05	4.05	1.32	21.03
-1.10	1.00	4.40	4.40	1.46	20.51
-1.11	1.00	4.79	4.79	1.64	20.68
-1.11	1.00	5.06	5.06	1.76	20.48
RUN = 40					
-1.11	1.00	1.00	1.00	.01	-79.20
-1.11	1.00	1.06	1.06	.08	18.52
-1.11	1.00	1.16	1.16	.19	19.42
-1.10	1.00	1.28	1.28	.28	12.64
-1.11	1.00	1.41	1.41	.43	15.97
-1.11	1.00	1.58	1.58	.61	17.92
-1.11	1.00	1.78	1.78	.79	17.92
-1.11	1.00	1.99	1.99	1.00	18.81
-1.11	1.00	2.21	2.21	1.18	17.18
-1.11	1.00	2.41	2.41	1.40	17.79
-1.11	1.00	2.65	2.65	1.61	17.14
-1.10	1.00	2.84	2.84	1.80	16.21
-1.11	1.00	3.11	3.11	2.08	17.89
-1.11	1.00	3.31	3.31	2.25	18.00
-1.10	1.00	3.54	3.54	2.44	17.27
-1.11	1.00	3.75	3.75	2.62	17.28
-1.11	1.00	3.97	3.97	2.80	16.97
-1.11	1.00	4.19	4.19	3.00	17.56
-1.11	1.00	4.39	4.39	3.16	17.70
-1.11	1.00	4.63	4.63	3.36	17.49
-1.11	1.00	4.87	4.87	3.56	18.28
-1.11	1.00	5.07	5.07	3.70	17.83

TABLE 4.- CONTINUED.

STATIC DATA FOR THE VEO-WING 1/10-SCALE RESEARCH MODEL, VSTOL TEST NO. 204

ALPHA	NPR	NPRS	NPRTOT	TOH	THETAJ
RUN = 41					
-1.11	1.00	1.00	1.00	.02	-68.25
-1.11	1.00	1.10	1.10	.08	10.88
-1.11	1.00	1.20	1.20	.16	8.53
-1.11	1.00	1.33	1.33	.27	17.49
-1.10	1.00	1.47	1.47	.36	12.74
-1.11	1.00	1.64	1.64	.51	18.02
-1.11	1.00	1.89	1.89	.69	18.17
-1.11	1.00	2.09	2.09	.83	19.12
-1.11	1.00	2.39	2.39	1.03	17.57
-1.11	1.00	2.58	2.58	1.15	17.18
-1.11	1.00	2.85	2.85	1.33	18.18
-1.10	1.00	3.02	3.02	1.44	18.41
-1.11	1.00	3.25	3.25	1.57	19.04
-1.10	1.00	3.54	3.54	1.74	19.11
-1.11	1.00	3.77	3.77	1.83	19.51
-1.10	1.00	3.97	3.97	1.97	19.20
-1.11	1.00	4.24	4.24	2.15	20.51
-1.11	1.00	4.46	4.46	2.26	19.96
-1.11	1.00	4.69	4.69	2.38	19.91
-1.11	1.00	4.92	4.92	2.53	20.55
RUN = 42					
-1.11	1.00	1.00	1.00	.01	41.67
-1.11	1.00	1.17	1.17	.21	25.85
-1.11	1.00	1.46	1.46	.50	23.08
-1.11	1.00	1.84	1.84	.86	22.48
-1.11	1.00	2.32	2.32	1.27	21.87
-1.10	1.00	2.81	2.81	1.68	21.08
-1.11	1.00	3.29	3.29	2.12	21.59
-1.11	1.00	3.82	3.82	2.57	21.06
-1.11	1.00	4.30	4.30	2.98	20.75
-1.11	1.00	4.77	4.77	3.41	21.29
-1.11	1.00	5.01	5.01	3.62	21.13

TABLE 4.- CONTINUED.

STATIC DATA FOR THE VEO-WING 1/10-SCALE RESEARCH MODEL, VSTOL TEST NO. 204

ALPHA	NPR	NPRS	NPRTOT	TOH	THETAJ
RUN = 43					
-1.11	1.00	1.00	1.00	.01	46.18
-1.11	1.09	1.00	1.09	.55	-7.34
-1.11	1.27	1.00	1.27	1.18	-6.00
-1.11	1.63	1.00	1.63	2.18	-6.12
-1.11	2.00	1.00	2.00	3.27	-15.02
-1.11	2.37	1.00	2.37	4.35	-15.47
-1.11	2.75	1.00	2.75	5.49	-14.38
-1.11	3.13	1.00	3.13	6.63	-15.59
-1.11	3.49	1.00	3.49	7.77	-13.96
-1.11	3.86	1.00	3.86	8.89	-15.96
-1.11	4.25	1.00	4.25	10.13	-16.24
-1.11	4.64	1.00	4.64	11.40	-15.47
-1.11	4.94	1.00	4.94	12.42	-14.70
RUN = 44					
-1.11	1.00	1.00	1.00	.01	46.89
-1.11	1.07	1.00	1.07	.50	-5.62
-1.11	1.18	1.00	1.18	1.09	-4.21
-1.11	1.41	1.00	1.41	1.94	-3.76
-1.11	1.73	1.00	1.73	3.01	-2.59
-1.11	2.05	1.00	2.05	4.05	-12.00
-1.11	2.37	1.00	2.37	5.15	-12.85
-1.11	2.69	1.00	2.69	6.29	-12.48
-1.11	3.01	1.00	3.01	7.46	-10.90
-1.11	3.34	1.00	3.34	8.59	-12.21
-1.11	3.67	1.00	3.67	9.73	-13.47
-1.11	4.00	1.00	4.00	10.98	-12.75
RUN = 45					
-1.10	1.00	1.00	1.00	.00	86.50
-1.11	1.06	1.00	1.06	.50	-4.66
-1.11	1.15	1.00	1.15	1.01	-6.33
-1.11	1.29	1.00	1.29	1.78	-4.35
-1.11	1.49	1.00	1.49	2.73	-3.24
-1.11	1.75	1.00	1.75	3.71	-7.25
-1.11	2.03	1.00	2.03	4.83	-10.53
-1.11	2.29	1.00	2.29	5.93	-11.55
-1.11	2.57	1.00	2.57	7.11	-11.87
-1.11	2.85	1.00	2.85	8.24	-14.66
-1.11	3.13	1.00	3.13	9.35	-15.91
-1.11	3.41	1.00	3.41	10.59	-14.03

TABLE 4.- CONTINUED.

STATIC DATA FOR THE VEO-WING 1/10-SCALE RESEARCH MODEL, VSTOL TEST NO. 204

ALPHA	NPR	NPRS	NPRTOT	TOH	THETAJ
RUN = 46					
-1.10	1.00	1.00	1.00	.02	-61.55
-1.10	1.06	1.00	1.06	.47	-3.65
-1.10	1.13	1.00	1.13	.89	-5.14
-1.10	1.26	1.00	1.26	1.60	-4.80
-1.10	1.50	1.00	1.50	2.62	-2.46
-1.10	1.77	1.00	1.77	3.63	-5.43
-1.11	2.07	1.00	2.07	4.86	-10.32
-1.10	2.32	1.00	2.32	5.87	-10.10
-1.10	2.60	1.00	2.60	7.04	-9.59
-1.11	2.89	1.00	2.89	8.28	-9.94
-1.11	3.14	1.00	3.14	9.34	-10.97
-1.11	3.44	1.00	3.44	10.64	-10.47
RUN = 47					
-1.10	1.06	1.00	1.06	.51	-8.92
-1.11	1.15	1.00	1.15	1.02	-7.35
-1.10	1.36	1.00	1.36	1.89	-5.41
-1.10	1.66	1.00	1.66	2.98	-2.23
-1.11	1.93	1.00	1.93	3.94	-9.16
-1.10	2.23	1.00	2.23	5.06	-9.90
-1.11	2.55	1.00	2.55	6.21	-10.13
-1.11	2.85	1.00	2.85	7.36	-9.83
-1.11	2.90	1.00	2.90	7.71	-9.49
-1.11	3.17	1.00	3.17	8.71	-9.34
-1.11	3.48	1.00	3.48	9.82	-10.14
-1.11	3.79	1.00	3.79	11.03	-10.17
-1.11	1.00	1.00	1.00	.12	1.60
RUN = 48					
-1.10	1.00	1.00	1.00	.02	12.45
-1.11	1.06	1.00	1.05	.46	-4.99
-1.11	1.14	1.07	1.12	.89	-5.80
-1.10	1.32	1.27	1.31	1.71	-3.89
-1.10	1.56	1.54	1.55	2.69	-1.76
-1.11	1.83	1.82	1.83	3.63	-6.76
-1.11	2.11	2.11	2.11	4.76	-7.89
-1.10	2.39	2.39	2.39	5.83	-8.77
-1.10	2.69	2.69	2.69	6.96	-9.32
-1.10	2.98	2.98	2.98	8.13	-7.69
-1.11	3.26	3.27	3.26	9.19	-8.30
-1.10	3.57	3.57	3.57	10.34	-9.14

TABLE 4.- CONTINUED.

STATIC DATA FOR THE VED-WING 1/10-SCALE RESEARCH MODEL,VSTOL TEST NO. 204

ALPHA	NPR	NPRS	NPRTOT	TOH	THETAJ
RUN = 49					
-1.10	1.00	1.00	1.00	.01	-60.16
-1.10	1.07	1.01	1.05	.50	-4.63
-1.10	1.16	1.11	1.15	.99	-3.51
-1.10	1.31	1.30	1.31	1.71	-2.17
-1.10	1.54	1.55	1.54	2.60	-.46
-1.10	1.80	1.82	1.81	3.58	-1.62
-1.10	2.07	2.08	2.07	4.54	-8.95
-1.10	2.33	2.32	2.33	5.55	-9.65
-1.10	2.62	2.58	2.61	6.69	-9.27
-1.10	2.92	2.85	2.90	7.91	-8.16
-1.10	3.19	3.09	3.17	8.98	-8.30
-1.10	3.46	3.34	3.43	10.02	-9.85
RUN = 50					
-1.10	1.00	1.00	1.00	.02	45.43
-1.10	1.06	1.01	1.05	.43	-3.33
-1.10	1.16	1.10	1.14	.93	-4.30
-1.11	1.30	1.28	1.29	1.66	-1.92
-1.10	1.55	1.56	1.55	2.63	-.28
-1.10	1.81	1.82	1.81	3.60	-1.49
-1.10	2.09	2.10	2.09	4.62	-8.89
-1.10	2.37	2.36	2.37	5.75	-9.55
-1.10	2.65	2.62	2.64	6.85	-9.25
-1.10	2.93	2.88	2.92	8.02	-8.03
-1.10	3.21	3.13	3.19	9.15	-8.36
-1.10	3.49	3.38	3.46	10.24	-9.72
RUN = 51					
-1.10	1.02	1.03	1.02	.78	.29
-1.11	1.06	1.00	1.05	.51	-5.73
-1.10	1.17	1.00	1.13	.99	-3.25
-1.10	1.31	1.00	1.24	1.69	-2.13
-1.10	1.57	1.01	1.43	2.64	-.19
-1.11	1.84	1.04	1.64	3.61	-2.25
-1.11	2.13	1.08	1.87	4.59	-8.89
-1.11	2.40	1.18	2.10	5.60	-9.09
-1.11	2.69	1.43	2.38	6.67	-8.44
-1.10	2.98	1.69	2.66	7.67	-10.33
-1.10	3.27	1.83	2.91	8.77	-8.33
-1.11	3.56	2.01	3.17	9.78	-9.25

TABLE 4.- CONTINUED.

STATIC DATA FOR THE VEO-WING 1/10-SCALE RESEARCH MODEL,VSTOL TEST NO. 204

ALPHA	NPR	NPRS	NPRTOT	TOH	THETAJ
RUN = 52					
-1.10	1.00	1.00	1.00	.01	38.17
-1.10	1.06	1.04	1.06	.47	-4.96
-1.10	1.17	1.14	1.16	.96	-3.12
-1.10	1.32	1.32	1.32	1.68	-1.91
-1.10	1.56	1.57	1.57	2.60	.20
-1.10	1.85	1.86	1.85	3.60	-2.31
-1.10	2.12	2.14	2.13	4.54	-8.89
-1.10	2.41	2.43	2.42	5.59	-9.13
-1.10	2.70	2.72	2.70	6.67	-8.29
-1.10	2.97	3.00	2.98	7.62	-10.11
-1.10	3.24	3.27	3.25	8.66	-8.24
-1.10	3.55	3.59	3.56	9.78	-9.15
RUN = 53					
-1.10	1.00	1.00	1.00	.03	82.30
-1.10	1.07	1.03	1.06	.49	-2.17
-1.10	1.17	1.15	1.16	.96	-.52
-1.10	1.30	1.34	1.31	1.66	-.07
-1.10	1.53	1.60	1.55	2.53	1.65
-1.10	1.78	1.87	1.80	3.45	.90
-1.10	2.05	2.16	2.08	4.36	-6.91
-1.10	2.32	2.45	2.35	5.39	-7.36
-1.10	2.60	2.74	2.63	6.42	-7.57
-1.10	2.89	3.04	2.92	7.52	-8.16
-1.10	3.13	3.29	3.17	8.49	-7.35
-1.10	3.41	3.58	3.45	9.61	-6.62
RUN = 54					
-1.11	1.00	1.00	1.00	.02	71.97
-1.10	1.07	1.04	1.06	.53	-4.26
-1.11	1.16	1.16	1.16	1.02	-1.64
-1.11	1.31	1.36	1.32	1.78	-.41
-1.11	1.55	1.62	1.57	2.74	1.30
-1.11	1.81	1.90	1.83	3.73	.35
-1.11	2.08	2.19	2.11	4.71	-6.77
-1.10	2.39	2.51	2.42	5.89	-7.04
-1.10	2.64	2.77	2.68	6.92	-6.85
-1.11	2.93	3.06	2.96	8.00	-8.26
-1.10	3.20	3.33	3.24	9.13	-6.70
-1.10	3.50	3.63	3.53	10.28	-6.89

TABLE 4.- CONTINUED.

STATIC DATA FOR THE VEO-WING 1/10-SCALE RESEARCH MODEL, VSTOL TEST NO. 204

ALPHA	NPR	NPRS	NPRTOT	TOH	THETAJ
RUN = 55					
-1.10	1.00	1.00	1.00	.03	76.43
-1.10	1.00	1.22	1.22	.24	12.75
-1.11	1.00	1.62	1.62	.67	19.31
-1.11	1.00	2.15	2.15	1.14	17.28
-1.10	1.00	2.67	2.67	1.63	15.51
-1.11	1.00	3.28	3.28	2.20	16.70
-1.10	1.00	3.84	3.84	2.70	16.84
-1.11	1.00	4.41	4.41	3.16	16.49
-1.11	1.00	4.97	4.97	3.60	16.54
RUN = 56					
-1.11	1.00	1.00	1.00	.01	29.10
-1.11	1.00	1.25	1.25	.25	19.71
-1.10	1.00	1.71	1.71	.59	14.86
-1.11	1.00	2.30	2.30	1.01	16.57
-1.11	1.00	2.83	2.83	1.35	15.74
-1.11	1.00	3.49	3.49	1.72	17.01
-1.11	1.00	4.15	4.15	2.06	16.96
-1.11	1.00	4.68	4.68	2.34	17.60
-1.11	1.00	5.17	5.17	2.61	17.11
RUN = 57					
-1.11	1.00	1.00	1.00	.04	-83.98
-1.11	1.00	1.21	1.21	.21	11.62
-1.11	1.00	1.49	1.49	.51	17.15
-1.10	1.00	1.92	1.92	.89	17.39
-1.11	1.00	2.40	2.40	1.28	16.89
-1.11	1.00	2.95	2.95	1.77	17.78
-1.11	1.00	3.49	3.49	2.20	17.07
-1.11	1.00	3.99	3.99	2.63	17.34
-1.11	1.00	4.54	4.54	3.08	17.37
-1.11	1.00	5.00	5.00	3.48	17.49
RUN = 58					
-1.11	1.00	1.00	.98	.01	-14.64
-1.11	1.06	1.01	1.05	.47	-3.75
-1.11	1.14	1.10	1.13	.95	-1.93
-1.11	1.31	1.29	1.31	1.67	-.98
-1.11	1.53	1.53	1.53	2.52	.84
-1.11	1.80	1.81	1.80	3.47	-2.33
-1.11	2.06	2.08	2.06	4.42	-4.51
-1.11	2.34	2.36	2.34	5.46	-4.44
-1.11	2.61	2.64	2.62	6.50	-4.49
-1.11	2.90	2.93	2.90	7.60	-4.25
-1.11	3.17	3.20	3.18	8.67	-4.79
-1.11	3.45	3.47	3.46	9.70	-5.17

TABLE 4.- CONTINUED.

STATIC DATA FOR THE VEO-WING 1/10-SCALE RESEARCH MODEL, VSTOL TEST NO. 204

ALPHA	NPR	NPRS	NPRTOT	TOH	THETAJ
RUN = 59					
-1.11	1.00	1.00	1.00	.00	54.12
-1.11	1.07	1.04	1.06	.48	-4.92
-1.11	1.16	1.16	1.16	.99	-3.02
-1.11	1.34	1.34	1.34	1.70	-1.98
-1.11	1.58	1.59	1.58	2.59	-.31
-1.11	1.86	1.87	1.86	3.54	-4.46
-1.11	2.16	2.17	2.16	4.60	-5.64
-1.11	2.44	2.46	2.45	5.64	-5.56
-1.11	2.73	2.75	2.74	6.68	-6.07
-1.11	3.02	3.04	3.03	7.77	-5.23
-1.11	3.30	3.32	3.31	8.75	-6.65
-1.11	3.61	3.62	3.61	9.84	-6.67
RUN = 60					
-1.11	1.00	1.00	.99	.02	-20.70
-1.11	1.06	1.02	1.05	.44	-2.74
-1.11	1.15	1.13	1.14	.93	-2.57
-1.11	1.31	1.31	1.31	1.69	-.93
-1.11	1.56	1.56	1.56	2.66	.99
-1.11	1.83	1.84	1.83	3.68	-1.57
-1.11	2.12	2.14	2.12	4.76	-4.10
-1.11	2.40	2.43	2.41	5.87	-3.96
-1.10	2.68	2.70	2.68	6.95	-4.22
-1.11	2.95	2.97	2.96	8.06	-3.58
-1.11	3.24	3.25	3.25	9.17	-4.68
-1.11	3.53	3.53	3.53	10.27	-5.49
RUN = 61					
-1.11	1.00	1.00	1.00	.03	7.93
-1.11	1.09	1.00	1.09	.54	-7.94
-1.11	1.29	1.00	1.29	1.25	-9.00
-1.11	1.64	1.00	1.64	2.27	-10.16
-1.11	2.02	1.00	2.02	3.43	-10.97
-1.11	2.40	1.00	2.40	4.58	-10.73
-1.11	2.81	1.00	2.81	5.83	-11.20
-1.11	3.17	1.00	3.17	6.97	-10.59
-1.11	3.53	1.00	3.53	8.08	-12.04
-1.11	3.91	1.00	3.91	9.37	-10.38
-1.11	4.28	1.00	4.28	10.55	-11.55
-1.11	4.66	1.00	4.66	11.80	-12.91

TABLE 4.- CONTINUED.

STATIC DATA FOR THE VEO-WING 1/10-SCALE RESEARCH MODEL, VSTOL TEST NO. 204

ALPHA	NPR	NPRS	NPRTOT	TOH	THETAJ
RUN = 62					
-1.11	1.00	1.00	1.00	.04	75.42
-1.11	1.06	1.00	1.06	.51	-1.37
-1.11	1.13	1.00	1.13	.99	-5.53
-1.11	1.29	1.00	1.29	1.81	-3.60
-1.11	1.54	1.00	1.54	2.83	-1.65
-1.11	1.80	1.00	1.80	3.77	-9.47
-1.11	2.09	1.00	2.09	4.91	-10.35
-1.11	2.37	1.00	2.37	6.06	-10.70
-1.11	2.65	1.00	2.65	7.21	-9.23
-1.11	2.95	1.00	2.95	8.50	-7.78
-1.11	3.22	1.00	3.22	9.60	-7.51
-1.11	3.51	1.00	3.51	10.78	-8.79
RUN = 63					
-1.11	1.03	1.00	1.03	1.08	-.89
-1.11	1.06	1.00	1.06	.53	-6.77
-1.11	1.15	1.00	1.15	1.10	-6.01
-1.11	1.28	1.00	1.28	1.83	-5.08
-1.11	1.50	1.00	1.50	2.75	-6.18
-1.11	1.76	1.00	1.76	3.79	-7.52
-1.11	2.04	1.00	2.04	4.94	-8.43
-1.11	2.34	1.00	2.34	6.21	-8.58
-1.11	2.60	1.00	2.60	7.30	-9.03
-1.11	2.87	1.00	2.87	8.48	-8.85
-1.11	3.16	1.00	3.16	9.68	-8.95
-1.11	3.44	1.00	3.44	10.83	-10.60
RUN = 64					
-1.11	1.03	1.00	1.03	1.19	-1.29
-1.11	1.07	1.00	1.07	1.13	-17.49
-1.11	1.17	1.00	1.17	2.34	-16.88
-1.11	1.31	1.00	1.31	3.89	-16.36
-1.11	1.54	1.00	1.54	5.85	-18.31
-1.11	1.82	1.00	1.82	8.17	-19.51
-1.11	2.11	1.00	2.11	10.68	-19.91
-1.11	2.39	1.00	2.39	13.10	-19.73
-1.11	2.70	1.00	2.70	15.86	-20.28
-1.11	2.99	1.00	2.99	18.36	-19.77
-1.11	3.26	1.00	3.26	20.78	-20.54
-1.11	3.49	1.00	3.49	22.74	-21.81

TABLE 4.- CONTINUED.

STATIC DATA FOR THE VEO-WING 1/10-SCALE RESEARCH MODEL,VSTOL TEST NO. 204

ALPHA	NPR	NPRS	NPRTOT	TOH	THETAJ
RUN = 65					
-1.11	1.00	1.00	1.00	.02	-19.60
-1.11	1.06	1.00	1.06	1.03	-16.87
-1.11	1.14	1.00	1.14	2.08	-17.50
-1.11	1.29	1.00	1.29	3.64	-16.27
-1.11	1.56	1.00	1.56	5.79	-15.18
-1.11	1.86	1.00	1.86	8.24	-20.84
-1.11	2.16	1.00	2.16	10.72	-21.45
-1.11	2.43	1.00	2.43	13.01	-21.60
-1.11	2.74	1.00	2.74	15.60	-20.56
-1.11	3.01	1.00	3.01	17.97	-18.74
-1.11	3.32	1.00	3.32	20.56	-19.43
-1.11	3.54	1.00	3.54	22.50	-20.00
RUN = 66					
-1.11	1.00	1.00	1.00	.02	-53.86
-1.11	1.11	1.00	1.11	1.30	-17.74
-1.11	1.32	1.00	1.32	2.76	-19.14
-1.11	1.69	1.00	1.69	5.06	-21.31
-1.11	2.06	1.00	2.06	7.38	-21.51
-1.11	2.44	1.00	2.44	9.73	-21.23
-1.11	2.82	1.00	2.82	12.19	-21.71
-1.11	3.20	1.00	3.20	14.66	-21.19
-1.11	3.60	1.00	3.60	17.24	-22.11
-1.11	3.98	1.00	3.98	19.77	-21.08
-1.11	4.37	1.00	4.37	22.38	-22.41
-1.11	4.70	1.00	4.70	24.67	-23.26
RUN = 67					
-1.11	1.02	1.02	1.02	.86	-1.09
-1.11	1.07	1.03	1.06	.99	-16.48
-1.11	1.17	1.15	1.16	2.00	-15.70
-1.11	1.34	1.33	1.34	3.45	-14.34
-1.11	1.58	1.58	1.58	5.25	-12.96
-1.11	1.87	1.87	1.87	7.37	-17.81
-1.11	2.15	2.15	2.15	9.50	-17.66
-1.11	2.42	2.42	2.42	11.51	-17.72
-1.11	2.73	2.73	2.73	13.80	-17.82
-1.11	3.00	3.00	3.00	15.82	-17.06
-1.11	3.31	3.31	3.31	18.11	-18.32
-1.11	3.57	3.57	3.57	20.04	-18.49

TABLE 4.- CONTINUED.

STATIC DATA FOR THE VEO-WING 1/10-SCALE RESEARCH MODEL, VSTOL TEST NO. 204

ALPHA	NPR	NPRS	NPRTOT	TOH	THETAJ
RUN = 68					
-1.11	1.00	1.00	1.00	.01	40.29
-1.11	1.07	1.03	1.06	1.01	-17.64
-1.11	1.16	1.13	1.15	1.98	-15.20
-1.11	1.34	1.33	1.34	3.60	-13.87
-1.11	1.59	1.59	1.59	5.54	-12.72
-1.11	1.83	1.83	1.83	7.50	-15.76
-1.11	2.14	2.13	2.14	9.90	-16.86
-1.11	2.42	2.40	2.42	12.16	-16.42
-1.11	2.73	2.70	2.72	14.63	-16.87
-1.11	3.00	2.96	2.99	16.79	-16.27
-1.11	3.31	3.26	3.29	19.25	-17.15
-1.11	3.55	3.50	3.54	21.19	-17.67
RUN = 69					
-1.11	1.00	1.00	1.00	.04	88.40
-1.11	1.07	1.02	1.06	.95	-16.36
-1.11	1.19	1.15	1.18	2.16	-14.35
-1.11	1.34	1.31	1.33	3.41	-13.43
-1.11	1.56	1.55	1.56	5.10	-12.29
-1.11	1.83	1.83	1.83	7.15	-15.89
-1.11	2.09	2.09	2.09	9.14	-17.02
-1.11	2.38	2.38	2.38	11.34	-17.04
-1.11	2.68	2.68	2.68	13.62	-16.92
-1.11	2.95	2.95	2.95	15.71	-16.55
-1.11	3.24	3.24	3.24	18.03	-17.19
-1.11	3.49	3.49	3.49	19.96	-18.16
RUN = 70					
-1.11	1.00	1.00	1.00	.02	88.10
-1.11	1.00	1.19	1.19	.38	1.32
-1.11	1.00	1.57	1.57	1.07	-.58
-1.11	1.00	1.97	1.97	1.75	.02
-1.11	1.00	2.42	2.42	2.47	.05
-1.11	1.00	2.95	2.95	3.30	.39
-1.11	1.00	3.44	3.44	4.08	.47
-1.11	1.00	3.94	3.94	4.86	.28
-1.11	1.00	4.48	4.48	5.69	.43
-1.11	1.00	4.99	4.99	6.48	.04
-1.11	1.00	5.30	5.30	6.96	.23

TABLE 4.- CONTINUED.

STATIC DATA FOR THE VEO-WING 1/10-SCALE RESEARCH MODEL, VSTOL TEST NO. 204

ALPHA	NPR	NPRS	NPRTOT	TOH	THETAJ
RUN = 71					
-1.11	1.00	1.00	1.00	.02	61.68
-1.11	1.00	1.20	1.20	.34	-8.35
-1.11	1.00	1.52	1.52	.86	-4.41
-1.11	1.00	1.97	1.97	1.51	-3.12
-1.11	1.00	2.53	2.53	2.25	-2.54
-1.11	1.00	3.07	3.07	2.88	-2.09
-1.11	1.00	3.49	3.49	3.32	-1.38
-1.11	1.00	4.13	4.13	3.93	-1.57
-1.11	1.00	4.70	4.70	4.48	-1.34
-1.11	1.00	5.01	5.01	4.77	-1.66
RUN = 72					
-1.11	1.00	1.00	1.00	.01	-81.77
-1.11	1.00	1.20	1.20	.47	-1.30
-1.11	1.00	1.58	1.58	1.21	.07
-1.11	1.00	2.06	2.06	2.10	.11
-1.11	1.00	2.58	2.58	3.10	-.07
-1.11	1.00	3.10	3.10	4.04	-.32
-1.11	1.00	3.70	3.70	5.07	-.35
-1.11	1.00	4.21	4.21	5.88	-.57
-1.11	1.00	4.76	4.76	6.71	-.57
-1.11	1.00	4.96	4.96	7.00	-.74
RUN = 73					
-1.11	1.00	1.00	1.00	.01	-22.94
-1.11	1.00	1.23	1.23	.28	-14.26
-1.11	1.00	1.64	1.64	.71	-15.84
-1.11	1.00	2.11	2.11	1.16	-16.43
-1.10	1.00	2.65	2.65	1.72	-16.72
-1.11	1.00	3.18	3.18	2.22	-16.69
-1.11	1.00	3.67	3.67	2.67	-16.84
-1.11	1.00	4.30	4.30	3.21	-17.02
-1.11	1.00	4.82	4.82	3.62	-17.07
-1.10	1.00	4.96	4.96	3.73	-16.88
RUN = 74					
-1.11	1.00	1.00	1.00	.01	29.92
-1.11	1.00	1.22	1.22	.22	-21.00
-1.11	1.00	1.56	1.56	.52	-20.62
-1.11	1.00	2.05	2.05	.88	-19.85
-1.11	1.00	2.59	2.59	1.23	-19.51
-1.11	1.00	3.10	3.10	1.53	-20.46
-1.10	1.00	3.69	3.69	1.86	-20.48
-1.11	1.00	4.23	4.23	2.14	-20.06
-1.11	1.00	4.76	4.76	2.41	-20.05
-1.11	1.00	5.01	5.01	2.54	-19.96

TABLE 4.- CONTINUED.

STATIC DATA FOR THE VEO-WING 1/10-SCALE RESEARCH MODEL, VSTOL TEST NO. 204

ALPHA	NPR	NPRS	NPRTOT	TOH	THETAJ
RUN = 75					
-1.10	1.00	1.00	1.00	.02	18.77
-1.11	1.00	1.21	1.21	.23	-9.61
-1.11	1.00	1.57	1.57	.58	-15.46
-1.11	1.00	1.99	1.99	.94	-15.34
-1.11	1.00	2.44	2.44	1.31	-17.04
-1.11	1.00	3.00	3.00	1.76	-16.89
-1.11	1.00	3.49	3.49	2.15	-16.92
-1.11	1.00	3.99	3.99	2.56	-16.83
-1.11	1.00	4.49	4.49	2.97	-16.57
-1.11	1.00	5.02	5.02	3.40	-16.60
RUN = 76					
-1.11	1.00	1.00	1.00	.02	18.35
-1.11	1.09	1.04	1.07	.58	-25.94
-1.11	1.18	1.13	1.17	1.10	-25.70
-1.11	1.38	1.35	1.37	1.98	-24.31
-1.11	1.61	1.60	1.61	2.90	-24.46
-1.11	1.89	1.89	1.89	4.09	-27.88
-1.11	2.19	2.18	2.19	5.27	-27.76
-1.10	2.48	2.46	2.47	6.41	-27.62
-1.11	2.78	2.77	2.78	7.67	-28.06
-1.11	3.08	3.06	3.07	8.85	-27.42
-1.11	3.37	3.34	3.36	10.09	-28.37
-1.11	3.67	3.64	3.66	11.35	-23.30
RUN = 77					
-1.11	1.00	1.00	1.00	.02	-71.45
-1.11	1.08	1.04	1.07	.52	-26.87
-1.11	1.20	1.18	1.19	1.14	-25.70
-1.11	1.38	1.38	1.38	1.94	-24.72
-1.11	1.62	1.63	1.63	2.91	-26.16
-1.11	1.90	1.91	1.90	4.07	-28.30
-1.11	2.20	2.21	2.20	5.24	-28.64
-1.11	2.50	2.52	2.51	6.44	-28.57
-1.11	2.80	2.81	2.80	7.60	-28.84
-1.11	3.10	3.12	3.11	8.79	-28.32
-1.11	3.38	3.40	3.39	9.90	-29.53
-1.11	3.70	3.72	3.71	11.14	-29.65

TABLE 4.- CONTINUED.

STATIC DATA FOR THE VEO-WING 1/10-SCALE RESEARCH MODEL, VSTOL TEST NO. 204

ALPHA	NPR	NPRS	NPRTOT	TOH	THETAJ
RUN = 78					
-1.11	1.00	1.00	1.00	.00	-57.34
-1.11	1.08	1.04	1.07	.57	-26.39
-1.11	1.19	1.18	1.19	1.21	-25.18
-1.11	1.38	1.38	1.38	2.05	-24.25
-1.11	1.63	1.64	1.63	3.14	-26.00
-1.11	1.92	1.93	1.93	4.40	-26.77
-1.11	2.23	2.23	2.23	5.71	-27.48
-1.11	2.52	2.50	2.51	6.92	-27.56
-1.11	2.82	2.79	2.81	8.21	-27.78
-1.11	3.11	3.07	3.10	9.47	-27.28
-1.11	3.42	3.38	3.41	10.82	-28.52
-1.11	3.71	3.66	3.70	12.08	-28.52
RUN = 79					
-1.11	1.00	1.00	1.00	.04	-79.44
-1.11	1.12	1.00	1.12	.69	-24.71
-1.11	1.37	1.00	1.37	1.57	-28.48
-1.11	1.77	1.00	1.77	2.92	-30.40
-1.11	2.16	1.00	2.16	4.18	-30.19
-1.11	2.57	1.00	2.57	5.53	-30.21
-1.11	2.96	1.00	2.96	6.86	-29.63
-1.11	3.36	1.00	3.36	8.28	-30.89
-1.11	3.80	1.00	3.80	9.79	-31.19
-1.11	4.17	1.00	4.17	11.10	-31.14
-1.11	4.57	1.00	4.57	12.59	-32.42
-1.11	4.97	1.00	4.97	14.08	-33.20
RUN = 80					
-1.11	1.00	1.00	1.00	.02	-14.89
-1.11	1.07	1.00	1.07	.56	-28.15
-1.11	1.16	1.00	1.16	1.17	-28.02
-1.11	1.33	1.00	1.33	2.07	-26.54
-1.11	1.60	1.00	1.60	3.26	-28.49
-1.11	1.92	1.00	1.92	4.70	-30.58
-1.11	2.21	1.00	2.21	6.00	-31.24
-1.11	2.51	1.00	2.51	7.34	-31.41
-1.11	2.82	1.00	2.82	8.72	-30.34
-1.11	3.11	1.00	3.11	10.08	-29.04
-1.11	3.41	1.00	3.41	11.47	-30.25
-1.11	3.72	1.00	3.72	12.93	-30.69

TABLE 4.- CONTINUED.

STATIC DATA FOR THE VEO-WING 1/10-SCALE RESEARCH MODEL,VSTOL TEST NO. 204

ALPHA	NPR	NPRS	NPRTOT	TOH	THETAJ
RUN = 81					
-1.11	1.00	1.00	1.00	.01	-47.89
-1.11	1.08	1.00	1.08	.60	-28.23
-1.11	1.19	1.00	1.19	1.28	-25.91
-1.11	1.34	1.00	1.34	2.24	-25.97
-1.11	1.60	1.00	1.60	3.39	-29.54
-1.11	1.90	1.00	1.90	4.74	-29.50
-1.11	2.20	1.00	2.20	6.15	-30.11
-1.11	2.46	1.00	2.46	7.37	-29.96
-1.11	2.77	1.00	2.77	8.82	-30.56
-1.11	3.06	1.00	3.06	10.19	-30.42
-1.11	3.35	1.00	3.35	11.57	-31.71
-1.11	3.65	1.00	3.65	13.03	-32.86
RUN = 82					
-1.11	1.00	1.00	1.00	.02	-7.90
-1.11	1.06	1.00	1.06	1.02	-17.82
-1.11	1.14	1.00	1.14	2.00	-17.56
-1.11	1.28	1.00	1.28	3.38	-15.99
-1.11	1.56	1.00	1.56	5.58	-14.44
-1.10	1.85	1.00	1.85	7.89	-19.96
-1.11	2.12	1.00	2.12	10.12	-21.74
-1.11	2.44	1.00	2.44	12.75	-21.41
-1.11	2.74	1.00	2.74	15.28	-20.85
-1.11	3.03	1.00	3.03	17.64	-21.67
-1.11	3.38	1.00	3.38	20.67	-22.29
-1.11	3.44	1.00	3.44	21.16	-22.16
RUN = 83					
-1.11	1.00	1.00	1.00	.02	36.47
-1.11	1.07	1.00	1.07	1.05	-21.81
-1.11	1.16	1.00	1.16	2.11	-19.59
-1.10	1.31	1.00	1.31	3.68	-17.01
-1.11	1.53	1.00	1.53	5.66	-15.84
-1.11	1.79	1.00	1.79	7.72	-20.23
-1.11	2.07	1.00	2.07	10.19	-21.84
-1.11	2.37	1.00	2.37	12.73	-22.62
-1.11	2.66	1.00	2.66	15.32	-22.99
-1.10	2.95	1.00	2.95	17.79	-25.68
-1.11	3.24	1.00	3.24	20.35	-25.64
-1.11	3.47	1.00	3.47	22.32	-24.42

TABLE 4.- CONTINUED.

STATIC DATA FOR THE VEO-WING 1/10-SCALE RESEARCH MODEL, VSTOL TEST NO. 204

ALPHA	NPR	NPRS	NPRTOT	TOH	THETAJ
RUN = 84					
-1.10	1.00	1.00	1.00	.01	-40.83
-1.11	1.07	1.00	1.07	1.01	-17.01
-1.10	1.14	1.00	1.14	1.98	-17.50
-1.10	1.29	1.00	1.29	3.39	-16.02
-1.10	1.57	1.00	1.57	5.54	-14.58
-1.10	1.84	1.00	1.84	7.74	-19.66
-1.11	2.15	1.00	2.15	10.25	-21.79
-1.11	2.46	1.00	2.46	12.73	-21.34
-1.11	2.76	1.00	2.76	15.33	-20.89
-1.11	3.02	1.00	3.02	17.42	-21.60
-1.10	3.31	1.00	3.31	19.79	-22.38
-1.11	3.59	1.00	3.59	22.20	-21.96
RUN = 85					
-1.11	1.00	1.00	1.00	.02	-25.01
-1.10	1.00	1.00	1.00	.04	1.42
-1.11	1.00	1.00	1.00	.06	10.13
-1.10	1.00	1.00	1.00	.08	8.40
-1.11	1.00	1.00	1.00	.11	12.11
-1.11	1.00	1.00	1.00	.12	10.71
-1.10	1.00	1.00	1.00	.14	9.37
-1.11	1.00	1.00	1.00	.16	11.85
-1.11	1.00	1.00	1.00	.18	10.70
-1.11	1.00	1.00	1.00	.20	12.75
-1.11	1.00	1.00	1.00	.22	11.72
-1.11	1.00	1.00	1.00	.23	13.58
RUN = 86					
-1.11	1.00	1.00	1.00	.02	-29.52
-1.11	1.00	1.00	1.00	.04	1.57
-1.10	1.00	1.00	1.00	.07	9.63
-1.11	1.00	1.00	1.00	.08	8.07
-1.11	1.00	1.00	1.00	.09	7.56
-1.11	1.00	1.00	1.00	.12	10.71
-1.11	1.00	1.00	1.00	.14	17.46
-1.11	1.00	1.00	1.00	.16	11.85
-1.11	1.00	1.00	1.00	.18	10.70
-1.10	1.00	1.00	1.00	.20	12.75
-1.11	1.00	1.00	1.00	.22	16.68
-1.11	1.00	1.00	1.00	.24	13.17

TABLE 4.- CONTINUED.

STATIC DATA FOR THE VEO-WING 1/10-SCALE RESEARCH MODEL,VSTOL TEST NO. 204

ALPHA	NPR	NPRS	NPRTOT	TOH	THETAJ
RUN = 87					
-1.10	1.00	1.00	1.00	.02	1.20
-1.10	1.00	1.00	1.00	.04	14.03
-1.10	1.00	1.00	1.00	.07	18.49
-1.10	1.00	1.00	1.00	.08	8.04
-1.10	1.00	1.00	1.00	.11	12.11
-1.10	1.00	1.00	1.00	.12	15.21
-1.10	1.00	1.00	1.00	.15	12.99
-1.11	1.00	1.00	1.00	.16	11.85
-1.10	1.00	1.00	1.00	.18	13.74
-1.10	1.00	1.00	1.00	.20	12.76
-1.10	1.00	1.00	1.00	.22	14.24
-1.11	1.00	1.00	1.00	.24	13.18
RUN = 89					
-1.10	1.00	1.00	1.00	.01	-12.44
-1.10	1.12	1.00	1.12	.83	-32.61
-1.10	1.25	1.00	1.25	1.62	-32.57
-1.10	1.43	1.00	1.43	2.65	-31.88
-1.10	1.65	1.00	1.65	3.79	-31.74
-1.10	1.90	1.00	1.90	5.05	-31.44
-1.10	2.18	1.00	2.18	6.42	-31.58
-1.10	2.48	1.00	2.48	7.83	-31.65
-1.10	2.75	1.00	2.75	9.12	-31.15
-1.10	3.04	1.00	3.04	10.45	-30.27
-1.10	3.34	1.00	3.34	11.90	-29.33
-1.10	3.61	1.00	3.61	13.07	-28.37
RUN = 90					
-1.10	1.00	1.00	1.00	.04	45.89
-1.10	1.05	1.00	1.05	.64	-25.15
-1.10	1.12	1.00	1.12	1.21	-25.59
-1.10	1.29	1.00	1.29	1.34	-43.07
-1.10	1.52	1.00	1.52	3.17	-26.31
-1.10	1.80	1.00	1.80	4.54	-25.09
-1.10	2.08	1.00	2.08	5.84	-24.11
-1.10	2.38	1.00	2.38	7.27	-30.41
-1.10	2.65	1.00	2.65	8.65	-30.68
-1.10	2.93	1.00	2.93	10.09	-30.33
-1.10	3.21	1.00	3.21	11.51	-30.09
-1.10	3.50	1.00	3.50	12.98	-29.89

TABLE 4.- CONTINUED.

STATIC DATA FOR THE VEO-WING 1/10-SCALE RESEARCH MODEL,VSTOL TEST NO. 204

ALPHA	NPR	NPRS	NPRTOT	TOH	THETAJ
RUN = 91					
-1.10	1.00	1.00	1.00	.02	58.68
-1.10	1.08	1.00	1.08	.74	-33.03
-1.10	1.19	1.00	1.19	1.41	-31.13
-1.10	1.34	1.00	1.34	2.39	-31.12
-1.10	1.51	1.00	1.51	3.40	-30.51
-1.10	1.80	1.00	1.80	4.73	-30.29
-1.10	2.07	1.00	2.07	6.04	-30.69
-1.10	2.38	1.00	2.38	7.57	-31.13
-1.10	2.65	1.00	2.65	8.87	-31.37
-1.10	2.94	1.00	2.94	10.28	-31.46
-1.10	3.22	1.00	3.22	11.65	-31.82
-1.10	3.49	1.00	3.49	13.00	-31.84
RUN = 92					
-1.10	1.00	1.00	1.00	.03	-7.12
-1.10	1.02	1.00	1.02	.26	-24.82
-1.10	1.05	1.00	1.05	.62	-25.70
-1.10	1.13	1.00	1.13	1.25	-26.82
-1.10	1.29	1.00	1.29	2.17	-28.12
-1.10	1.57	1.00	1.57	3.42	-28.79
-1.10	1.88	1.00	1.88	4.80	-30.51
-1.10	2.15	1.00	2.15	6.12	-32.00
-1.10	2.44	1.00	2.44	7.50	-32.74
-1.10	2.75	1.00	2.75	9.01	-32.69
-1.10	3.04	1.00	3.04	10.41	-31.97
-1.10	3.34	1.00	3.34	11.84	-31.28
-1.10	3.62	1.00	3.62	13.16	-29.92
RUN = 93					
-1.10	1.00	1.00	1.00	.01	-83.85
-1.10	1.06	1.00	1.06	1.16	-17.29
-1.10	1.12	1.00	1.12	2.09	-17.66
-1.10	1.24	1.00	1.24	3.59	-18.47
-1.10	1.51	1.00	1.51	5.73	-20.11
-1.10	1.78	1.00	1.78	8.07	-21.50
-1.10	2.07	1.00	2.07	10.60	-22.73
-1.10	2.37	1.00	2.37	13.26	-23.75
-1.10	2.62	1.00	2.62	15.49	-25.21
-1.10	2.89	1.00	2.89	17.92	-23.62
-1.10	3.18	1.00	3.18	20.53	-22.64
-1.10	3.46	1.00	3.46	23.07	-21.01

TABLE 4.- CONTINUED.

STATIC DATA FOR THE VED-WING 1/10-SCALE RESEARCH MODEL, VSTOL TEST NO. 204

ALPHA	NPR	NPRS	NPRTOT	TOH	THETAJ
RUN = 94					
-1.10	1.00	1.00	1.00	.02	28.98
-1.10	1.08	1.00	1.08	1.28	-22.53
-1.10	1.18	1.00	1.18	2.55	-22.07
-1.10	1.32	1.00	1.32	4.14	-22.20
-1.10	1.53	1.00	1.53	6.25	-21.87
-1.10	1.77	1.00	1.77	8.38	-21.36
-1.10	2.05	1.00	2.05	10.83	-21.74
-1.10	2.34	1.00	2.34	13.39	-21.94
-1.10	2.60	1.00	2.60	15.67	-22.17
-1.10	2.89	1.00	2.89	18.30	-22.45
-1.10	3.16	1.00	3.16	20.63	-22.58
-1.10	3.45	1.00	3.45	23.19	-22.67
RUN = 95					
-1.10	1.00	1.00	1.00	.02	-57.43
-1.10	1.05	1.00	1.05	.97	-13.71
-1.10	1.12	1.00	1.12	1.98	-13.37
-1.10	1.23	1.00	1.23	3.39	-18.61
-1.10	1.49	1.00	1.49	5.40	-19.40
-1.10	1.78	1.00	1.78	7.93	-15.38
-1.10	2.05	1.00	2.05	10.29	-12.69
-1.10	2.33	1.00	2.33	12.65	-18.03
-1.10	2.61	1.00	2.61	15.24	-20.24
-1.10	2.88	1.00	2.88	17.69	-20.60
-1.10	3.17	1.00	3.17	20.35	-20.53
-1.10	3.42	1.00	3.42	22.67	-20.37
RUN = 96					
-1.10	1.00	1.00	1.00	.02	-49.81
-1.10	1.10	1.00	1.10	1.40	-22.14
-1.10	1.23	1.00	1.23	2.83	-22.13
-1.10	1.40	1.00	1.40	4.61	-21.92
-1.10	1.61	1.00	1.61	6.65	-21.97
-1.10	1.86	1.00	1.86	8.95	-21.99
-1.10	2.12	1.00	2.12	11.31	-21.95
-1.10	2.40	1.00	2.40	13.70	-22.01
-1.10	2.69	1.00	2.69	16.15	-21.57
-1.10	2.98	1.00	2.98	18.68	-20.54
-1.10	3.28	1.00	3.28	21.21	-19.22
-1.10	3.56	1.00	3.56	23.71	-17.86

TABLE 4.- CONTINUED.

STATIC DATA FOR THE VEO-WING 1/10-SCALE RESEARCH MODEL, VSTOL TEST NO. 204

ALPHA	NPR	NPRS	NPRTOT	TOH	THETAJ
RUN = 97					
-1.10	1.00	1.00	1.00	.02	-64.03
-1.10	1.11	1.00	1.11	.72	-11.68
-1.10	1.23	1.00	1.23	1.41	-11.43
-1.10	1.41	1.00	1.41	2.32	-11.38
-1.10	1.64	1.00	1.64	3.36	-11.33
-1.10	1.89	1.00	1.89	4.46	-11.17
-1.10	2.18	1.00	2.18	5.71	-11.43
-1.10	2.47	1.00	2.47	6.90	-11.51
-1.10	2.77	1.00	2.77	8.15	-10.60
-1.10	3.05	1.00	3.05	9.39	-9.19
-1.10	3.35	1.00	3.35	10.68	-7.58
-1.10	3.65	1.00	3.65	11.96	-5.94
RUN = 98					
-1.10	1.00	1.00	1.00	.04	77.16
-1.10	1.06	1.00	1.06	.54	-4.34
-1.10	1.14	1.00	1.14	1.09	-4.90
-1.10	1.32	1.00	1.32	1.93	-6.27
-1.10	1.60	1.00	1.60	2.99	-9.55
-1.10	1.90	1.00	1.90	4.36	-2.05
-1.10	2.20	1.00	2.20	5.60	-2.85
-1.10	2.49	1.00	2.49	6.76	-6.57
-1.10	2.80	1.00	2.80	8.02	-8.65
-1.10	3.10	1.00	3.10	9.34	-9.22
-1.10	3.39	1.00	3.39	10.60	-9.07
-1.10	3.69	1.00	3.69	11.96	-8.84
RUN = 99					
-1.10	1.00	1.00	1.00	.02	51.48
-1.10	1.10	1.00	1.10	.71	-10.01
-1.10	1.22	1.00	1.22	1.39	-9.80
-1.10	1.40	1.00	1.40	2.33	-10.55
-1.10	1.60	1.00	1.60	3.26	-10.70
-1.10	1.91	1.00	1.91	4.51	-10.60
-1.10	2.20	1.00	2.20	5.70	-11.20
-1.10	2.51	1.00	2.51	6.96	-11.66
-1.10	2.79	1.00	2.79	8.11	-11.89
-1.10	3.09	1.00	3.09	9.34	-11.99
-1.10	3.39	1.00	3.39	10.58	-12.21
-1.10	3.70	1.00	3.70	11.83	-12.33

TABLE 4.- CONTINUED.

STATIC DATA FOR THE VEO-WING 1/10-SCALE RESEARCH MODEL, VSTOL TEST NO. 204

ALPHA	NPR	NPRS	NPRTOT	TOH	THETAJ
RUN = 100					
-1.10	1.00	1.00	1.00	.04	40.89
-1.10	1.08	1.00	1.08	.70	-1.94
-1.10	1.15	1.00	1.15	1.13	-3.25
-1.10	1.29	1.00	1.29	1.95	-6.15
-1.10	1.56	1.00	1.56	3.02	-8.19
-1.10	1.87	1.00	1.87	4.26	-10.26
-1.10	2.16	1.00	2.16	5.42	-11.77
-1.10	2.44	1.00	2.44	6.62	-12.86
-1.10	2.75	1.00	2.75	7.95	-13.50
-1.10	3.02	1.00	3.02	9.14	-12.12
-1.10	3.33	1.00	3.33	10.44	-10.61
-1.10	3.63	1.00	3.63	11.80	-8.45
RUN = 101					
-1.10	1.00	1.00	1.00	.03	71.72
-1.10	1.02	1.00	1.02	.24	-7.51
-1.10	1.07	1.00	1.07	.53	-6.51
-1.10	1.19	1.00	1.19	1.20	-6.38
-1.10	1.33	1.00	1.33	1.99	-4.55
-1.10	1.59	1.00	1.59	3.10	-1.80
-1.10	1.88	1.00	1.88	4.29	-2.38
-1.10	2.18	1.00	2.18	5.40	-10.11
-1.10	2.45	1.00	2.45	6.57	-9.75
-1.10	2.75	1.00	2.75	7.84	-8.32
-1.10	3.08	1.00	3.08	9.22	-10.06
-1.10	3.34	1.00	3.34	10.31	-10.31
-1.10	3.64	1.00	3.64	11.63	-9.30
RUN = 102					
-1.10	1.00	1.00	1.00	.02	-64.42
-1.10	1.02	1.00	1.02	.22	-.59
-1.10	1.06	1.00	1.06	.47	-4.83
-1.10	1.19	1.00	1.19	1.17	-5.09
-1.10	1.33	1.00	1.33	1.96	-4.06
-1.10	1.59	1.00	1.59	3.04	-2.05
-1.10	1.86	1.00	1.86	4.12	-3.05
-1.10	2.17	1.00	2.17	5.31	-10.53
-1.10	2.46	1.00	2.46	6.54	-10.46
-1.10	2.75	1.00	2.75	7.81	-8.37
-1.10	3.04	1.00	3.04	9.06	-8.14
-1.10	3.33	1.00	3.33	10.33	-7.54
-1.10	3.65	1.00	3.65	11.85	-5.58

TABLE 4.- CONTINUED.

STATIC DATA FOR THE VEO-WING 1/10-SCALE RESEARCH MODEL, VSTOL TEST NO. 204

ALPHA	NPR	NPRS	NPRTOT	TOH	THETAJ
RUN = 103					
-1.10	1.00	1.00	1.00	.01	-28.68
-1.10	1.03	1.00	1.03	.22	-3.18
-1.10	1.11	1.00	1.11	.63	-7.47
-1.10	1.36	1.00	1.36	1.43	-6.32
-1.10	1.76	1.00	1.76	2.55	-9.68
-1.10	2.22	1.00	2.22	3.93	-10.63
-1.10	2.52	1.00	2.52	4.83	-10.90
-1.10	2.95	1.00	2.95	6.16	-10.20
-1.10	3.35	1.00	3.35	7.35	-11.90
-1.10	3.74	1.00	3.74	8.63	-9.61
-1.10	4.15	1.00	4.15	9.98	-8.91
-1.10	4.52	1.00	4.52	11.19	-9.17
-1.10	4.95	1.00	4.95	12.67	-8.24
RUN = 104					
-1.10	1.00	1.00	1.00	.02	-83.86
-1.10	1.02	1.00	1.01	.17	-10.49
-1.10	1.10	1.01	1.08	.55	-8.79
-1.10	1.17	1.17	1.17	1.02	-1.86
-1.10	1.36	1.38	1.37	1.83	-.58
-1.10	1.63	1.65	1.63	2.79	.69
-1.10	1.92	1.96	1.93	3.78	-4.54
-1.10	2.20	2.24	2.21	4.75	-4.71
-1.10	2.51	2.57	2.53	5.89	-4.99
-1.10	2.80	2.87	2.82	6.98	-4.71
-1.10	3.11	3.18	3.12	8.06	-5.62
-1.10	3.41	3.49	3.43	9.16	-5.78
-1.10	3.70	3.78	3.72	10.27	-4.51
RUN = 105					
-1.10	1.00	1.00	1.00	.02	-70.19
-1.10	1.00	1.29	1.29	.25	19.60
-1.10	1.00	1.69	1.69	.57	21.48
-1.10	1.00	2.38	2.38	1.05	20.28
-1.10	1.00	2.95	2.95	1.42	20.23
-1.10	1.00	3.67	3.67	1.83	19.65
-1.10	1.00	4.21	4.21	2.12	18.72
-1.10	1.00	4.86	4.86	2.49	18.44
-1.10	1.00	5.51	5.51	2.82	17.57

TABLE 4.- CONTINUED.

STATIC DATA FOR THE VEO-WING 1/10-SCALE RESEARCH MODEL, VSTOL TEST NO. 204

ALPHA	NPR	NPRS	NPRTOT	TOH	THETAJ
RUN = 106					
-1.10	1.00	1.00	1.00	.02	48.14
-1.10	1.00	1.21	1.21	.35	-4.87
-1.10	1.00	1.52	1.52	.84	-2.38
-1.10	1.00	2.00	2.00	1.51	-3.45
-1.10	1.00	2.51	2.51	2.19	-2.53
-1.10	1.00	3.09	3.09	2.87	-3.04
-1.10	1.00	3.62	3.62	3.41	-3.50
-1.10	1.00	4.18	4.18	3.97	-4.28
-1.10	1.00	4.69	4.69	4.49	-4.88
-1.10	1.00	5.01	5.01	4.81	-5.20
RUN = 107					
-1.11	1.00	1.00	1.00	.01	-45.47
-1.11	1.10	1.00	1.08	1.16	-18.67
-1.11	1.16	1.16	1.16	2.03	-14.45
-1.11	1.35	1.35	1.35	3.50	-13.44
-1.11	1.60	1.62	1.60	5.33	-12.57
-1.11	1.86	1.89	1.87	7.28	-15.61
-1.11	2.17	2.19	2.17	9.50	-17.28
-1.11	2.46	2.49	2.46	11.64	-17.43
-1.11	2.74	2.78	2.75	13.75	-16.51
-1.11	3.04	3.09	3.05	16.04	-16.80
-1.11	3.31	3.35	3.32	17.88	-18.20
-1.11	3.61	3.66	3.62	20.16	-17.31
RUN = 108					
-1.11	1.00	1.00	1.00	.00	-85.29
-1.11	1.11	1.00	1.11	1.27	-19.52
-1.11	1.34	1.00	1.34	2.78	-17.88
-1.11	1.72	1.00	1.72	5.00	-19.51
-1.11	2.12	1.00	2.12	7.41	-21.31
-1.11	2.51	1.00	2.51	9.80	-21.16
-1.11	2.90	1.00	2.90	12.27	-20.69
-1.11	3.31	1.00	3.31	14.90	-22.12
-1.11	3.68	1.00	3.68	17.31	-20.65
-1.11	4.06	1.00	4.06	19.81	-19.73
-1.11	4.50	1.00	4.50	22.70	-19.96
-1.11	4.89	1.00	4.89	25.34	-19.63

TABLE 4.- CONTINUED.

STATIC DATA FOR THE VEO-WING 1/10-SCALE RESEARCH MODEL,VSTOL TEST NO. 204

ALPHA	NPR	NPRS	NPRTOT	TOH	THETAJ
RUN = 109					
-1.11	1.00	1.00	1.00	.03	70.87
-1.11	1.07	1.00	1.07	1.10	-17.08
-1.11	1.16	1.00	1.16	2.20	-17.32
-1.11	1.32	1.00	1.32	3.84	-15.96
-1.11	1.57	1.00	1.57	5.93	-14.75
-1.11	1.85	1.00	1.85	8.26	-16.97
-1.11	2.16	1.00	2.16	10.89	-20.78
-1.11	2.44	1.00	2.44	13.31	-20.55
-1.11	2.73	1.00	2.73	15.83	-19.58
-1.11	3.02	1.00	3.02	18.37	-19.17
-1.11	3.30	1.00	3.30	20.89	-18.46
-1.11	3.58	1.00	3.58	23.41	-17.44
RUN = 110					
-1.11	1.00	1.00	1.00	.01	-85.08
-1.11	1.07	1.00	1.07	1.05	-18.37
-1.11	1.16	1.00	1.16	2.14	-17.18
-1.11	1.31	1.00	1.31	3.71	-16.12
-1.11	1.57	1.00	1.57	5.89	-14.38
-1.11	1.85	1.00	1.85	8.22	-16.51
-1.11	2.14	1.00	2.14	10.69	-20.78
-1.11	2.44	1.00	2.44	13.19	-20.45
-1.11	2.70	1.00	2.70	15.53	-19.28
-1.11	2.99	1.00	2.99	18.04	-20.73
-1.11	3.29	1.00	3.29	20.58	-21.19
-1.11	3.59	1.00	3.59	23.26	-20.23
RUN = 111					
-1.11	1.00	1.00	1.00	.02	63.88
-1.11	1.08	1.00	1.08	.61	-27.09
-1.11	1.17	1.00	1.17	1.18	-28.98
-1.11	1.33	1.00	1.33	2.03	-27.01
-1.11	1.60	1.00	1.60	3.20	-25.33
-1.11	1.89	1.00	1.89	4.55	-30.37
-1.11	2.19	1.00	2.19	5.92	-30.50
-1.11	2.52	1.00	2.52	7.45	-30.35
-1.11	2.80	1.00	2.80	8.75	-29.69
-1.11	3.08	1.00	3.08	10.04	-30.99
-1.11	3.37	1.00	3.37	11.39	-30.70
-1.11	3.65	1.00	3.65	12.73	-29.91

TABLE 4.- CONTINUED.

STATIC DATA FOR THE VED-WING 1/10-SCALE RESEARCH MODEL, VSTOL TEST NO. 204

ALPHA	NPR	NPRS	NPRTOT	TOH	THETAJ
RUN = 112					
-1.11	1.00	1.00	1.00	.00	-53.59
-1.11	1.08	1.00	1.08	.58	-29.20
-1.11	1.18	1.00	1.18	1.19	-28.17
-1.11	1.36	1.00	1.36	2.16	-27.10
-1.11	1.60	1.00	1.60	3.20	-25.95
-1.11	1.90	1.00	1.90	4.58	-30.08
-1.11	2.18	1.00	2.18	5.82	-30.39
-1.11	2.49	1.00	2.49	7.24	-30.42
-1.11	2.78	1.00	2.78	8.59	-30.01
-1.11	3.08	1.00	3.08	9.99	-29.07
-1.11	3.37	1.00	3.37	11.31	-28.36
-1.11	3.67	1.00	3.67	12.74	-27.63
RUN = 113					
-1.11	1.00	1.00	1.00	.05	70.97
-1.11	1.14	1.00	1.14	.78	-26.47
-1.11	1.40	1.00	1.40	1.62	-26.99
-1.11	1.80	1.00	1.80	2.92	-29.63
-1.11	2.16	1.00	2.16	4.12	-29.70
-1.11	2.58	1.00	2.58	5.46	-30.40
-1.11	3.01	1.00	3.01	6.90	-29.55
-1.11	3.41	1.00	3.41	8.27	-31.26
-1.11	3.78	1.00	3.78	9.55	-30.23
-1.11	4.19	1.00	4.19	10.96	-29.30
-1.11	4.57	1.00	4.57	12.34	-29.73
-1.11	4.99	1.00	4.99	13.86	-29.49
RUN = 114					
-1.11	1.03	1.03	1.03	1.01	-.92
-1.11	1.11	1.01	1.08	.61	-29.76
-1.11	1.19	1.16	1.18	1.12	-25.34
-1.11	1.35	1.33	1.34	1.82	-25.02
-1.11	1.63	1.63	1.63	2.91	-25.25
-1.11	1.93	1.93	1.93	4.13	-28.15
-1.11	2.19	2.20	2.19	5.21	-28.65
-1.11	2.45	2.46	2.45	6.20	-28.77
-1.11	2.76	2.78	2.77	7.44	-28.87
-1.11	3.07	3.09	3.08	8.65	-29.04
-1.11	3.36	3.37	3.36	9.81	-30.43
-1.11	3.65	3.68	3.66	10.99	-29.74

TABLE 4.- CONTINUED.

STATIC DATA FOR THE VEO-WING 1/10-SCALE RESEARCH MODEL, VSTOL TEST NO. 204

ALPHA	NPR	NPRS	NPRTOT	TOH	THETAJ
RUN = 115					
-1.11	1.00	1.00	1.00	.03	80.53
-1.11	1.00	1.20	1.20	.18	-21.63
-1.11	1.00	1.59	1.59	.52	-22.53
-1.11	1.00	2.04	2.04	.83	-22.72
-1.11	1.00	2.63	2.63	1.24	-23.49
-1.11	1.00	3.12	3.12	1.53	-23.87
-1.11	1.00	3.73	3.73	1.88	-25.18
-1.11	1.00	4.23	4.23	2.16	-25.55
-1.11	1.00	4.83	4.83	2.50	-26.22
-1.11	1.00	5.09	5.09	2.64	-26.01
RUN = 150					
-.05	1.00	1.00	1.00	.12	-66.51
-.04	1.07	1.00	1.07	1.11	-20.67
-.04	1.15	1.00	1.15	2.17	-19.35
-.03	1.30	1.00	1.30	3.64	-18.08
-.03	1.57	1.00	1.57	5.81	-15.45
-.02	1.84	1.00	1.84	7.97	-19.08
-.00	2.12	1.00	2.12	10.39	-21.83
.00	2.42	1.00	2.42	12.90	-21.30
.01	2.71	1.00	2.71	15.39	-20.39
.02	3.00	1.00	3.00	17.84	-21.75
.02	3.28	1.00	3.28	20.73	-21.47
.03	3.50	1.00	3.50	23.22	-20.46
RUN = 151					
-.00	1.00	1.00	1.00	.03	57.68
.00	1.07	1.00	1.07	1.02	-5.78
.01	1.14	1.00	1.14	2.05	-7.42
.01	1.31	1.00	1.31	3.73	-7.57
.01	1.55	1.00	1.55	5.71	-7.34
.02	1.85	1.00	1.85	8.11	-7.37
.03	2.15	1.00	2.15	10.57	-6.97
.03	2.14	1.00	2.14	10.52	-7.11
.03	2.44	1.00	2.44	13.00	-7.10
.03	2.73	1.00	2.73	15.46	-7.66
.04	3.03	1.00	3.03	18.01	-8.44
.04	3.31	1.00	3.31	20.49	-6.64
.04	3.48	1.00	3.48	21.99	-6.47

TABLE 4.- CONTINUED.

STATIC DATA FOR THE VEO-WING 1/10-SCALE RESEARCH MODEL,VSTOL TEST NO. 204

ALPHA	NPR	NPRS	NPRTOT	TOH	THETAJ
RUN = 152					
.00	1.00	1.00	1.00	.11	41.74
.00	1.07	1.00	1.07	.98	-9.86
.01	1.15	1.00	1.15	2.01	-8.27
.01	1.32	1.00	1.32	3.63	-8.48
.02	1.57	1.00	1.57	5.60	-8.13
.02	1.84	1.00	1.84	7.71	-7.98
.03	2.13	1.00	2.13	10.02	-7.84
.03	2.42	1.00	2.42	12.44	-7.36
.04	2.71	1.00	2.71	14.85	-8.12
-.00	3.01	1.00	3.01	17.32	-9.03
.00	3.30	1.00	3.30	19.84	-7.19
.00	3.49	1.00	3.49	21.41	-7.06
RUN = 162					
.01	1.00	1.00	1.00	.02	-40.60
.01	1.07	1.00	1.07	1.04	-18.35
.01	1.15	1.00	1.15	2.06	-17.85
.02	1.30	1.00	1.30	3.59	-17.53
.02	1.55	1.00	1.55	5.66	-15.72
.04	1.82	1.00	1.82	7.79	-18.94
.05	2.11	1.00	2.11	10.22	-21.78
.01	2.38	1.00	2.38	12.54	-21.91
.02	2.70	1.00	2.70	15.22	-21.13
.02	2.98	1.00	2.98	17.63	-20.10
.03	3.26	1.00	3.26	19.96	-20.14
.03	3.49	1.00	3.49	22.08	-19.10
RUN = 169					
-.01	1.00	1.00	1.00	.04	-85.65
-.01	1.08	1.00	1.08	1.09	-27.14
-.00	1.16	1.00	1.16	2.14	-24.30
.00	1.32	1.00	1.32	3.79	-20.58
.01	1.52	1.00	1.52	5.64	-20.07
.02	1.80	1.00	1.80	7.87	-24.79
.00	2.08	1.00	2.08	10.35	-26.02
.01	2.36	1.00	2.36	12.74	-26.42
.01	2.64	1.00	2.64	15.21	-27.20
.01	2.93	1.00	2.93	17.84	-27.15
.01	3.02	1.00	3.02	18.72	-27.01
.02	3.23	1.00	3.23	20.57	-27.28
.02	3.43	1.00	3.43	22.21	-27.57

TABLE 4.- CONTINUED.

STATIC DATA FOR THE VEO-WING 1/10-SCALE RESEARCH MODEL, VSTOL TEST NO. 204

ALPHA	NPR	NPRS	NPRTOT	TOH	THETAJ
RUN = 186					
-.02	1.00	1.00	1.00	.04	89.60
-.02	1.08	1.00	1.08	1.14	-25.78
-.02	1.16	1.00	1.16	2.26	-22.64
-.01	1.32	1.00	1.32	3.96	-20.39
-.01	1.52	1.00	1.52	5.83	-19.23
.01	1.81	1.00	1.81	8.25	-24.24
.02	2.09	1.00	2.09	10.73	-25.62
.03	2.37	1.00	2.37	13.19	-25.87
-.01	2.66	1.00	2.66	15.77	-26.77
-.00	2.93	1.00	2.93	18.33	-26.58
.01	3.21	1.00	3.21	20.93	-26.65
.01	3.39	1.00	3.39	22.49	-26.82
RUN = 241					
-.00	1.00	1.00	1.00	.07	52.27
.00	1.07	1.00	1.07	1.08	-22.44
.00	1.16	1.00	1.16	2.20	-22.06
.01	1.33	1.00	1.33	3.82	-20.45
.01	1.56	1.00	1.56	5.78	-18.19
.03	1.85	1.00	1.85	8.01	-27.52
.02	2.13	1.00	2.13	10.37	-32.02
.01	2.43	1.00	2.43	12.82	-31.58
.01	2.71	1.00	2.71	15.12	-28.94
.02	2.99	1.00	2.99	17.68	-26.19
.02	3.30	1.00	3.30	20.57	-24.83
.03	3.50	1.00	3.50	22.37	-24.72
RUN = 247					
.01	1.00	1.00	1.00	.02	-16.45
.02	1.08	1.00	1.08	1.06	-19.38
.02	1.16	1.00	1.16	2.07	-19.15
.03	1.32	1.00	1.32	3.64	-17.97
.03	1.57	1.00	1.57	5.67	-16.06
.04	1.85	1.00	1.85	7.84	-18.93
.05	2.14	1.00	2.14	10.23	-22.62
.06	2.43	1.00	2.43	12.65	-22.75
.07	2.73	1.00	2.73	15.14	-21.60
.07	3.00	1.00	3.00	17.41	-20.87
.08	3.28	1.00	3.28	19.80	-20.71
.08	3.59	1.00	3.59	22.43	-19.16

TABLE 4.- CONTINUED.

STATIC DATA FOR THE VEO-WING 1/10-SCALE RESEARCH MODEL, VSTOL TEST NO. 204

ALPHA	NPR	NPRS	NPRTOT	TOH	THETAJ
RUN = 255					
.00	1.00	1.00	1.00	.03	-51.65
.01	1.07	1.00	1.07	1.04	-11.29
.01	1.15	1.00	1.15	2.09	-8.73
.01	1.32	1.00	1.32	3.70	-8.18
.01	1.57	1.00	1.57	5.76	-7.89
.02	1.86	1.00	1.86	7.92	-7.64
.03	2.16	1.00	2.16	10.26	-7.66
.03	2.43	1.00	2.43	12.47	-7.35
.03	2.72	1.00	2.72	14.86	-8.19
.03	3.01	1.00	3.01	17.22	-9.13
.03	3.31	1.00	3.31	19.77	-7.16
.04	3.59	1.00	3.59	22.12	-7.40
RUN = 258					
-.02	1.00	1.00	1.00	.03	-4.36
-.02	1.08	1.00	1.08	1.17	-7.57
-.02	1.16	1.00	1.16	2.27	-8.03
-.01	1.32	1.00	1.32	3.88	-7.64
-.01	1.56	1.00	1.56	6.02	-7.53
-.01	1.85	1.00	1.85	8.36	-7.25
.00	2.14	1.00	2.14	10.74	-7.21
.01	2.42	1.00	2.42	13.15	-6.88
.01	2.73	1.00	2.73	15.80	-7.74
.01	3.01	1.00	3.01	18.18	-8.62
.01	3.32	1.00	3.32	20.95	-6.74
.01	3.63	1.00	3.63	23.70	-7.09
RUN = 265					
-.02	1.00	1.00	1.00	.01	43.49
-.02	1.07	1.00	1.07	1.08	-18.88
-.01	1.16	1.00	1.16	2.24	-17.73
-.01	1.31	1.00	1.31	3.80	-16.94
-.01	1.56	1.00	1.56	5.92	-14.93
.00	1.86	1.00	1.86	8.36	-17.73
.02	2.13	1.00	2.13	10.61	-21.39
-.00	2.42	1.00	2.42	13.14	-21.51
.01	2.73	1.00	2.73	15.84	-20.66
.01	3.01	1.00	3.01	18.33	-19.80
.01	3.32	1.00	3.32	21.06	-19.49
.01	3.61	1.00	3.61	23.71	-18.15

TABLE 4.- CONTINUED.

STATIC DATA FOR THE VEO-WING 1/10-SCALE RESEARCH MODEL, VSTOL TEST NO. 204

ALPHA	NPR	NPRS	NPRTOT	TOH	THETAJ
RUN = 272					
.00	1.00	1.00	1.00	.05	-65.49
.01	1.08	1.00	1.08	1.12	-23.36
.02	1.17	1.00	1.17	2.15	-23.43
.02	1.32	1.00	1.32	3.56	-21.87
.02	1.56	1.00	1.56	5.54	-19.14
.04	1.86	1.00	1.86	7.79	-25.05
.06	2.12	1.00	2.12	9.83	-33.18
.06	2.43	1.00	2.43	12.28	-33.10
.07	2.74	1.00	2.74	14.44	-30.58
.07	3.01	1.00	3.01	17.15	-26.92
.08	3.32	1.00	3.32	19.77	-25.95
.06	3.64	1.00	3.64	22.97	-25.11
RUN = 279					
-.02	1.00	1.00	1.00	.03	39.38
-.02	1.08	1.00	1.08	1.17	-8.72
-.02	1.16	1.00	1.16	2.34	-7.93
-.01	1.33	1.00	1.33	4.10	-8.24
-.01	1.54	1.00	1.54	6.10	-8.83
-.01	1.81	1.00	1.81	8.30	-8.20
-.00	2.11	1.00	2.11	10.86	-7.71
.00	2.38	1.00	2.38	13.27	-7.62
.00	2.67	1.00	2.67	15.86	-7.94
.01	2.97	1.00	2.97	18.45	-8.38
.01	3.22	1.00	3.22	20.75	-7.15
.01	3.53	1.00	3.53	23.53	-6.77
RUN = 286					
-.01	1.00	1.00	1.00	.02	56.00
-.01	1.08	1.00	1.08	1.16	-19.45
-.01	1.16	1.00	1.16	2.34	-18.62
-.00	1.32	1.00	1.32	4.02	-16.77
.00	1.55	1.00	1.55	6.13	-16.66
.01	1.83	1.00	1.83	8.55	-19.27
.02	2.11	1.00	2.11	11.03	-19.54
.03	2.39	1.00	2.39	13.58	-19.78
.03	2.68	1.00	2.68	16.21	-20.45
.04	2.96	1.00	2.96	18.75	-19.99
.04	3.26	1.00	3.26	21.43	-19.71
.05	3.51	1.00	3.51	23.76	-19.47

TABLE 4.- CONTINUED.

STATIC DATA FOR THE VEO-WING 1/10-SCALE RESEARCH MODEL, VSTOL TEST NO. 204

ALPHA	NPR	NPRS	NPRTOT	TOH	THETAJ
RUN = 293					
-.00	1.00	1.00	1.00	.05	-56.55
-.00	1.10	1.00	1.07	1.22	-18.93
.00	1.16	1.14	1.15	2.07	-15.40
.01	1.33	1.33	1.33	3.59	-15.15
.01	1.57	1.58	1.57	5.36	-14.87
.03	1.83	1.85	1.84	7.43	-18.52
.04	2.14	2.16	2.14	9.75	-18.86
.01	2.42	2.45	2.43	11.97	-18.91
.01	2.69	2.73	2.70	14.04	-18.99
.02	3.00	3.04	3.02	16.43	-18.62
.02	3.32	3.37	3.33	18.85	-19.65
.03	3.58	3.63	3.59	20.80	-18.99
RUN = 300					
-.00	1.00	1.00	1.00	.03	74.31
-.01	1.00	1.00	1.00	.03	64.76
-.00	1.09	1.00	1.07	1.10	-21.23
.01	1.17	1.17	1.17	2.15	-17.79
.01	1.33	1.33	1.33	3.46	-15.83
.01	1.56	1.57	1.57	5.21	-14.22
.02	1.84	1.86	1.84	7.35	-18.82
.04	2.15	2.18	2.16	9.77	-21.54
.04	2.42	2.45	2.43	11.83	-21.73
.05	2.71	2.75	2.73	14.10	-21.33
-.00	3.01	3.05	3.02	16.38	-22.39
.00	3.31	3.36	3.33	18.69	-21.05
.01	3.58	3.63	3.59	20.71	-21.22
RUN = 302					
-.00	1.00	1.00	1.00	.04	89.88
-.00	1.11	1.01	1.08	1.23	-9.32
-.00	1.16	1.15	1.16	2.08	-7.75
.00	1.33	1.34	1.33	3.55	-7.61
.01	1.56	1.57	1.56	5.26	-7.21
.01	1.84	1.86	1.85	7.39	-6.35
.02	2.15	2.17	2.16	9.76	-6.27
.02	2.40	2.44	2.41	11.66	-6.31
.03	2.73	2.77	2.74	14.14	-5.80
.03	3.02	3.06	3.03	16.27	-6.55
.03	3.26	3.32	3.23	18.11	-7.16
.03	3.60	3.65	3.61	20.62	-7.37

TABLE 4.- CONTINUED.

STATIC DATA FOR THE VED-WING 1/10-SCALE RESEARCH MODEL, VSTOL TEST NO. 204

ALPHA	NPR	NPRS	NPRTOT	TOH	THETAJ
RUN = 309					
.01	1.00	1.00	1.00	.01	-70.28
.01	1.10	1.01	1.07	1.21	-26.60
.02	1.16	1.14	1.15	2.05	-22.34
.02	1.34	1.34	1.34	3.58	-19.95
.03	1.56	1.58	1.57	5.27	-18.60
.02	1.84	1.86	1.84	7.39	-28.78
.03	2.12	2.15	2.13	9.61	-30.22
.02	2.40	2.44	2.41	11.72	-30.13
.03	2.70	2.74	2.72	13.99	-29.91
.01	2.99	3.03	3.00	16.19	-28.77
.02	3.30	3.35	3.31	18.53	-27.30
.02	3.59	3.64	3.60	20.78	-25.78
RUN = 315					
-.01	1.00	1.00	1.00	.02	-45.22
.00	1.00	1.00	1.00	.03	80.92
.01	1.10	1.00	1.07	1.15	-22.93
.01	1.34	1.34	1.34	3.53	-17.17
.04	1.83	1.85	1.84	7.14	-25.72
.06	2.42	2.46	2.43	11.51	-27.69
.08	2.99	3.03	3.00	15.83	-27.02
.09	3.55	3.61	3.57	20.30	-25.14
RUN = 335					
-.02	1.00	1.00	1.00	.01	33.39
-.01	1.10	1.00	1.07	1.16	-19.26
-.01	1.16	1.13	1.15	1.98	-16.00
-.01	1.33	1.33	1.33	3.50	-15.38
-.00	1.56	1.57	1.56	5.23	-14.42
.01	1.83	1.85	1.83	7.38	-18.61
.02	2.11	2.13	2.11	9.53	-19.01
.03	2.38	2.42	2.39	11.67	-19.13
.03	2.68	2.72	2.69	13.98	-19.03
.04	2.98	3.03	2.99	16.31	-18.81
.04	3.29	3.35	3.31	18.71	-19.68
.05	3.54	3.60	3.55	20.60	-18.99
RUN = 340					
.01	1.00	1.00	1.00	.14	-7.04
.01	1.10	1.00	1.07	1.14	-17.48
.01	1.16	1.14	1.15	2.03	-15.30
.01	1.32	1.31	1.32	3.39	-14.97
.01	1.56	1.57	1.56	5.20	-14.13
.01	1.83	1.85	1.84	7.32	-18.12
.02	2.10	2.13	2.11	9.43	-18.71
.01	2.39	2.42	2.39	11.61	-18.75
.02	2.69	2.72	2.70	13.93	-18.78
.00	2.99	3.04	3.01	16.31	-18.50

TABLE 4.- CONTINUED.

STATIC DATA FOR THE VEO-WING 1/10-SCALE RESEARCH MODEL,VSTOL TEST NO. 204

ALPHA	NPR	NPRS	NPRTOT	TOH	THETAJ
RUN = 342					
.00	1.00	1.00	1.00	.03	39.44
.01	1.11	1.01	1.08	1.26	-19.62
.01	1.17	1.16	1.17	2.14	-16.78
.01	1.31	1.31	1.31	3.35	-15.70
.03	1.82	1.84	1.83	7.30	-18.59
.04	2.10	2.12	2.10	9.47	-19.21
.05	2.39	2.43	2.40	11.76	-19.04
.06	2.68	2.72	2.69	13.93	-19.03
.06	2.95	2.99	2.96	16.06	-18.91
.07	3.28	3.34	3.30	18.61	-19.60
.07	3.53	3.59	3.55	20.54	-19.15
RUN = 350					
-.01	1.00	1.00	1.00	.04	66.93
-.01	1.09	1.00	1.07	1.17	-17.42
-.01	1.15	1.13	1.15	1.97	-16.73
.00	1.29	1.30	1.30	3.40	-16.57
.01	1.53	1.55	1.54	5.33	-16.45
.02	1.80	1.83	1.81	7.54	-18.66
.03	2.08	2.12	2.09	9.89	-20.03
.04	2.37	2.41	2.38	12.27	-20.18
.04	2.64	2.69	2.65	14.52	-20.05
.05	2.93	2.98	2.94	16.96	-19.66
.05	3.25	3.31	3.27	19.65	-20.24
.06	3.51	3.57	3.53	21.83	-19.67
-.02	1.00	1.00	1.00	.17	8.46
RUN = 357					
-.02	1.00	1.00	1.00	.02	40.48
-.01	1.10	1.00	1.07	1.19	-7.95
-.01	1.16	1.14	1.15	2.03	-6.92
-.01	1.31	1.32	1.31	3.49	-6.95
-.00	1.54	1.57	1.55	5.40	-7.14
.00	1.81	1.84	1.82	7.59	-6.74
.01	2.07	2.11	2.08	9.69	-5.92
.01	2.37	2.42	2.38	12.10	-5.82
.02	2.65	2.69	2.66	14.36	-5.76
.02	2.94	2.99	2.96	16.77	-5.69
.02	3.22	3.27	3.24	19.00	-6.81
.02	3.52	3.58	3.54	21.46	-6.78

TABLE 4.- CONTINUED.

STATIC DATA FOR THE VEO-WING 1/10-SCALE RESEARCH MODEL,VSTOL TEST NO. 204

ALPHA	NPR	NPRS	NPRTOT	TOH	THETAJ
RUN = 364					
-.02	1.01	1.00	1.01	.19	-22.27
-.02	1.00	1.00	1.00	.02	16.59
-.02	1.10	1.00	1.07	1.22	-25.03
-.01	1.16	1.14	1.15	2.04	-23.82
-.01	1.31	1.32	1.31	3.51	-22.87
-.00	1.57	1.59	1.58	5.57	-22.73
.02	1.80	1.83	1.81	7.50	-28.59
.03	2.13	2.17	2.14	10.25	-32.68
.04	2.36	2.41	2.38	12.18	-32.45
.05	2.65	2.70	2.66	14.52	-32.05
.06	2.94	2.99	2.95	16.94	-30.65
.06	3.19	3.24	3.21	19.06	-29.53
.07	3.50	3.55	3.51	21.58	-27.73
RUN = 365					
-.03	1.00	1.00	1.00	.04	75.02
-.03	1.10	1.00	1.07	1.20	-25.06
-.02	1.15	1.15	1.15	2.06	-23.06
-.02	1.32	1.33	1.32	3.53	-22.20
-.01	1.54	1.57	1.55	5.31	-21.86
.00	1.82	1.85	1.83	7.59	-28.47
.02	2.09	2.13	2.10	9.85	-32.51
.03	2.39	2.44	2.40	12.25	-32.40
.04	2.66	2.71	2.68	14.48	-31.90
.05	2.94	2.98	2.95	16.81	-30.70
.06	3.25	3.30	3.27	19.34	-29.20
.06	3.50	3.55	3.51	21.37	-27.84
RUN = 372					
.01	1.00	1.00	1.00	.02	-40.64
.01	1.00	1.20	1.20	.45	-23.04
.01	1.00	1.58	1.58	1.15	-22.16
.01	1.00	2.05	2.05	1.98	-20.64
.01	1.00	2.55	2.55	2.91	-19.61
.02	1.00	2.57	2.57	2.96	-20.53
.02	1.00	3.12	3.12	3.90	-18.26
.02	1.00	3.67	3.67	4.78	-15.91
.02	1.00	4.21	4.21	5.63	-12.32
.02	1.00	4.75	4.75	6.45	-9.72
.02	1.00	5.12	5.12	7.02	-8.35

TABLE 4.- CONTINUED.

STATIC DATA FOR THE VED-WING 1/10-SCALE RESEARCH MODEL, VSTOL TEST NO. 204

ALPHA	NPR	NPRS	NPRTOT	TOH	THETAJ
RUN = 380					
-.00	1.00	1.00	1.00	.02	-11.90
-.01	1.00	1.20	1.20	.45	-14.74
-.00	1.00	1.57	1.57	1.19	-13.93
-.00	1.00	2.05	2.05	2.05	-12.66
.00	1.00	2.59	2.59	3.08	-12.82
.01	1.00	3.13	3.13	4.06	-11.42
.01	1.00	3.69	3.69	5.00	-9.93
.01	1.00	4.23	4.23	5.88	-7.96
.01	1.00	4.76	4.76	6.68	-6.84
.01	1.00	5.09	5.09	7.20	-6.03
RUN = 388					
-.01	1.00	1.00	1.00	.02	-78.46
-.01	1.00	1.19	1.19	.43	-12.25
-.00	1.00	1.56	1.56	1.17	-5.23
-.00	1.00	2.06	2.06	2.09	-4.73
-.00	1.00	2.59	2.59	3.10	-4.23
.00	1.00	3.14	3.14	4.09	-4.28
.00	1.00	3.66	3.66	4.96	-3.35
.01	1.00	4.22	4.22	5.86	-3.17
.01	1.00	4.73	4.73	6.64	-2.92
.01	1.00	5.08	5.08	7.18	-2.81
RUN = 395					
-.01	1.00	1.00	1.00	.01	85.98
-.00	1.34	1.00	1.34	4.07	-15.77
.01	1.89	1.00	1.89	8.68	-18.55
.03	2.43	1.00	2.43	13.47	-20.36
.02	3.09	1.00	3.09	19.26	-20.70
.01	3.57	1.00	3.57	23.65	-20.19
RUN = 396					
-.01	1.00	1.00	1.00	.05	85.85
-.00	1.33	1.00	1.33	4.10	-15.91
.02	1.84	1.00	1.84	8.49	-20.69
.04	2.40	1.00	2.40	13.52	-22.16
.06	3.00	1.00	3.00	18.91	-25.29
.00	3.59	1.00	3.59	24.19	-22.93
RUN = 397					
-.01	1.00	1.00	1.00	.03	63.87
.01	1.74	1.00	1.74	5.29	-23.65
.04	2.50	1.00	2.50	10.20	-25.68
.05	3.25	1.00	3.25	15.07	-24.37
.07	4.10	1.00	4.10	20.75	-23.31
.08	4.81	1.00	4.81	25.59	-24.09

TABLE 4.- CONTINUED.

STATIC DATA FOR THE VEO-WING 1/10-SCALE RESEARCH MODEL,VSTOL TEST NO. 204

ALPHA	NPR	NPRS	NPRTOT	TOH	THETAJ
RUN = 398					
-.00	1.00	1.00	1.00	.02	56.07
.01	1.71	1.00	1.71	5.07	-18.71
.02	2.47	1.00	2.47	9.94	-21.33
.03	3.29	1.00	3.29	15.33	-21.99
.03	4.02	1.00	4.02	20.20	-19.71
.03	4.84	1.00	4.84	25.86	-19.78
RUN = 399					
-.00	1.00	1.00	1.00	.04	73.64
.00	1.34	1.00	1.34	4.12	-16.14
.02	1.83	1.00	1.83	8.45	-18.52
.04	2.37	1.00	2.37	13.29	-19.64
.02	2.95	1.00	2.95	18.45	-20.25
.01	3.58	1.00	3.58	24.11	-18.81
RUN = 401					
-.00	1.00	1.00	1.00	.03	-78.57
.01	1.35	1.00	1.35	4.12	-16.02
.02	1.85	1.00	1.85	8.34	-18.79
.02	2.46	1.00	2.46	13.67	-21.03
.03	3.02	1.00	3.02	18.62	-19.39
.02	3.56	1.00	3.56	23.58	-18.14
RUN = 405					
-.00	1.00	1.00	1.00	.00	82.32
-.00	1.00	1.19	1.19	.34	-3.33
-.01	1.00	1.53	1.53	.88	-2.96
-.01	1.00	1.98	1.98	1.54	-4.08
-.00	1.00	2.49	2.49	2.24	-3.70
.00	1.00	3.02	3.02	2.86	-4.20
.00	1.00	3.61	3.61	3.48	-4.56
.00	1.00	4.16	4.16	4.04	-5.16
.00	1.00	4.69	4.69	4.60	-5.63
.00	1.00	5.01	5.01	4.93	-5.89
RUN = 417					
.00	1.00	1.00	1.00	.04	80.74
.00	1.00	1.19	1.19	.34	.10
.00	1.00	1.52	1.52	.85	-3.71
.00	1.00	1.98	1.98	1.52	-3.05
.00	1.00	2.55	2.55	2.30	-3.15
.01	1.00	3.08	3.08	2.93	-3.76
.01	1.00	3.60	3.60	3.51	-3.88
.01	1.00	4.12	4.12	4.05	-4.58
.01	1.00	4.69	4.69	4.66	-4.82
.01	1.00	5.12	5.12	5.12	-5.46

TABLE 4.- CONTINUED.

STATIC DATA FOR THE VEO-WING 1/10-SCALE RESEARCH MODEL, VSTOL TEST NO. 204

ALPHA	NPR	NPRS	NPRTOT	TOH	THETAJ
RUN = 425					
.00	1.00	1.00	1.00	.02	85.57
.00	1.00	1.20	1.20	.34	.11
-.00	1.00	1.53	1.53	.87	-2.90
.00	1.00	1.97	1.97	1.54	-2.89
.00	1.00	2.49	2.49	2.26	-2.84
.01	1.00	3.00	3.00	2.88	-2.73
.01	1.00	3.55	3.55	3.47	-4.00
.01	1.00	4.06	4.06	4.02	-3.83
.01	1.00	5.02	5.02	5.02	-5.23
RUN = 434					
-.02	1.00	1.00	1.00	.02	-37.37
-.02	1.00	1.15	1.15	.34	-6.63
-.02	1.00	1.41	1.41	.85	-3.80
-.02	1.00	1.80	1.80	1.57	-3.40
-.02	1.00	2.24	2.24	2.34	-3.18
-.02	1.00	2.72	2.72	3.10	-3.09
-.02	1.00	3.20	3.20	3.86	-3.05
-.02	1.00	3.69	3.69	4.65	-2.77
-.02	1.00	4.15	4.15	5.39	-2.48
-.02	1.00	4.40	4.40	5.79	-2.45
RUN = 437					
-.01	1.00	1.00	1.00	.03	58.30
RUN = 439					
-.01	1.00	1.00	1.00	.03	-54.48
-.01	1.09	1.00	1.06	1.06	-17.88
-.01	1.15	1.11	1.14	1.94	-15.51
-.01	1.29	1.29	1.29	3.23	-15.23
-.00	1.52	1.54	1.52	5.01	-15.05
.01	1.76	1.80	1.77	6.95	-16.81
.02	2.04	2.09	2.05	9.17	-18.66
.02	2.28	2.34	2.30	11.14	-18.84
.03	2.57	2.64	2.59	13.47	-18.95
.03	2.84	2.91	2.86	15.63	-18.57
.04	3.09	3.17	3.11	17.66	-18.46
.04	3.38	3.47	3.40	20.04	-19.30

TABLE 4.- CONTINUED.

STATIC DATA FOR THE VEO-WING 1/10-SCALE RESEARCH MODEL,VSTOL TEST NO. 204

ALPHA	NPR	NPRS	NPRTOT	TOH	THETAJ
RUN = 440					
-.03	1.00	1.00	1.00	.01	-39.52
-.03	1.09	1.01	1.07	1.04	-16.10
-.02	1.16	1.14	1.15	2.04	-15.05
-.02	1.30	1.30	1.30	3.25	-14.34
-.02	1.51	1.54	1.52	4.90	-14.02
-.01	1.78	1.82	1.79	7.01	-16.13
.01	2.03	2.09	2.05	9.04	-18.30
.01	2.29	2.35	2.31	11.06	-18.78
.02	2.56	2.63	2.58	13.23	-19.03
.03	2.86	2.93	2.88	15.58	-18.58
.03	3.12	3.19	3.14	17.66	-18.53
.04	3.43	3.52	3.45	20.18	-19.04
RUN = 445					
.01	1.00	1.00	1.00	.03	65.50
.01	1.08	1.00	1.07	1.11	-19.12
-.01	1.14	1.10	1.14	1.98	-16.35
-.01	1.29	1.27	1.29	3.40	-16.13
-.00	1.52	1.52	1.52	5.33	-15.06
.01	1.77	1.78	1.77	7.32	-16.80
.02	2.04	2.05	2.04	9.62	-20.18
.03	2.32	2.33	2.32	11.92	-20.33
-.00	2.59	2.61	2.60	14.26	-20.20
.00	2.87	2.89	2.88	16.63	-20.88
.01	3.13	3.15	3.13	18.87	-19.49
.01	3.41	3.43	3.42	21.30	-18.88
RUN = 450					
.01	1.00	1.00	1.00	.02	81.85
.01	1.00	1.55	1.55	.52	-3.36
.01	1.00	2.38	2.38	1.21	-3.70
.01	1.00	3.21	3.21	1.88	-2.58
.01	1.00	4.14	4.14	2.61	-2.45
.01	1.00	4.99	4.99	3.26	-2.43

TABLE 4.- CONTINUED.

STATIC DATA FOR THE VEO-WING 1/10-SCALE RESEARCH MODEL, VSTOL TEST NO. 204

ALPHA	NPR	NPRS	NPRTOT	TOH	THETAJ
RUN = 455					
.01	1.00	1.00	1.00	.05	44.91
.01	1.07	1.00	1.07	1.06	-15.21
.02	1.16	1.00	1.16	2.22	-16.84
.02	1.28	1.00	1.28	3.51	-16.07
.03	1.52	1.00	1.52	5.60	-14.43
.04	1.80	1.00	1.80	7.97	-17.10
.05	2.08	1.00	2.08	10.43	-20.74
.05	2.38	1.00	2.38	13.00	-20.75
.06	2.67	1.00	2.67	15.57	-20.59
.06	2.94	1.00	2.94	18.03	-19.08
.07	3.21	1.00	3.21	20.50	-19.25
.07	3.51	1.00	3.51	23.21	-18.26
RUN = 456					
-.00	1.00	1.00	1.00	.02	-89.04
.00	1.07	1.00	1.07	1.08	-18.12
.00	1.15	1.00	1.15	2.13	-16.71
.01	1.29	1.00	1.29	3.61	-16.43
.01	1.53	1.00	1.53	5.74	-14.49
.02	1.81	1.00	1.81	7.99	-15.46
.04	2.10	1.00	2.10	10.47	-20.88
.04	2.36	1.00	2.36	12.79	-20.88
.05	2.67	1.00	2.67	15.45	-20.54
.06	2.96	1.00	2.96	18.04	-19.21
.06	3.22	1.00	3.22	20.37	-19.48
.07	3.51	1.00	3.51	23.08	-18.34
RUN = 463					
-.01	1.00	1.00	1.00	.02	14.87
-.00	1.07	1.00	1.07	1.06	-17.96
-.00	1.15	1.00	1.15	2.12	-17.08
.01	1.29	1.00	1.29	3.64	-16.28
.01	1.53	1.00	1.53	5.70	-14.67
.02	1.80	1.00	1.80	7.95	-15.90
.03	2.09	1.00	2.09	10.44	-20.77
.04	2.37	1.00	2.37	12.87	-20.95
.03	2.66	1.00	2.66	15.47	-20.64
.03	2.94	1.00	2.94	18.00	-19.14
.04	3.23	1.00	3.23	20.57	-19.22
.02	3.48	1.00	3.48	22.87	-18.51

TABLE 4.- CONTINUED.

STATIC DATA FOR THE VEO-WING 1/10-SCALE RESEARCH MODEL,VSTOL TEST NO. 204

ALPHA	NPR	NPRS	NPRTOT	TOH	THETAJ
RUN = 472					
-.00	1.00	1.00	1.00	.01	62.75
.00	1.08	1.00	1.08	1.08	-18.39
.00	1.19	1.00	1.19	2.35	-17.33
.01	1.43	1.00	1.43	4.19	-15.75
.02	1.76	1.00	1.76	6.45	-16.75
.03	2.08	1.00	2.08	8.95	-22.14
.04	2.40	1.00	2.40	11.40	-22.55
.00	2.73	1.00	2.73	14.00	-22.51
.01	3.03	1.00	3.03	16.33	-21.11
.02	3.38	1.00	3.38	19.03	-22.55
.02	3.74	1.00	3.74	21.82	-22.60
.03	4.01	1.00	4.01	23.94	-21.62
RUN = 479					
-.01	1.00	1.00	1.00	.01	28.47
-.01	1.07	1.00	1.07	1.08	-7.14
-.00	1.16	1.00	1.16	2.20	-8.04
-.00	1.31	1.00	1.31	3.76	-7.26
.00	1.55	1.00	1.55	5.90	-7.07
.01	1.83	1.00	1.83	8.14	-7.12
.01	2.12	1.00	2.12	10.57	-7.19
.02	2.40	1.00	2.40	12.97	-6.87
.02	2.68	1.00	2.68	15.39	-7.66
.02	2.96	1.00	2.96	17.93	-8.53
.02	3.25	1.00	3.25	20.48	-7.03
.03	3.54	1.00	3.54	23.12	-6.72
RUN = 486					
.00	1.00	1.00	1.00	.02	-80.74
.00	1.07	1.00	1.07	1.08	-23.04
.01	1.15	1.00	1.15	2.11	-23.00
.01	1.31	1.00	1.31	3.73	-21.11
.02	1.54	1.00	1.54	5.73	-18.19
.03	1.82	1.00	1.82	7.92	-24.99
.05	2.12	1.00	2.12	10.47	-31.95
.06	2.40	1.00	2.40	12.85	-31.16
.06	2.70	1.00	2.70	15.42	-28.02
.07	2.97	1.00	2.97	18.00	-25.36
.07	3.27	1.00	3.27	20.84	-24.04
.08	3.52	1.00	3.52	23.13	-23.76

TABLE 4.- CONTINUED.

STATIC DATA FOR THE VEO-WING 1/10-SCALE RESEARCH MODEL, VSTOL TEST NO. 204

ALPHA	NPR	NPRS	NPRTOT	TOH	THETAJ
RUN = 493					
-.00	1.00	1.00	1.00	.01	48.78
.00	1.07	1.00	1.07	1.08	-24.99
.01	1.16	1.00	1.16	2.29	-22.20
.01	1.31	1.00	1.31	3.81	-20.08
.02	1.53	1.00	1.53	5.84	-20.17
.03	1.81	1.00	1.81	8.26	-23.71
.04	2.08	1.00	2.08	10.59	-25.00
.05	2.36	1.00	2.36	13.11	-26.18
.06	2.65	1.00	2.65	15.73	-26.60
.07	2.94	1.00	2.94	18.45	-26.51
.08	3.20	1.00	3.20	20.92	-26.54
.08	3.48	1.00	3.48	23.30	-26.84
RUN = 501					
-.02	1.00	1.00	1.00	.01	66.08
-.02	1.08	1.00	1.08	1.11	-25.19
-.02	1.16	1.00	1.16	2.27	-22.38
-.01	1.31	1.00	1.31	3.85	-19.74
-.01	1.53	1.00	1.53	5.87	-20.09
.00	1.82	1.00	1.82	8.26	-23.50
.01	2.09	1.00	2.09	10.68	-25.07
.02	2.37	1.00	2.37	13.21	-25.92
.03	2.62	1.00	2.62	15.40	-26.36
.04	2.94	1.00	2.94	18.47	-26.45
.05	3.20	1.00	3.20	20.85	-26.44
.02	3.50	1.00	3.50	23.48	-26.70
RUN = 526					
-.02	1.00	1.00	1.00	.00	89.02
-.01	1.07	1.00	1.07	1.11	-19.61
-.01	1.16	1.00	1.16	2.27	-18.62
-.00	1.32	1.00	1.32	3.92	-16.46
.01	1.53	1.00	1.53	5.86	-16.92
.02	1.80	1.00	1.80	8.11	-20.51
.03	2.08	1.00	2.08	10.62	-21.89
.04	2.36	1.00	2.36	13.09	-22.55
.05	2.65	1.00	2.65	15.67	-22.83
.02	2.92	1.00	2.92	18.14	-25.50
.03	3.22	1.00	3.22	20.77	-25.35
.03	3.47	1.00	3.47	23.08	-23.91

TABLE 4.- CONTINUED.

STATIC DATA FOR THE VEO-WING 1/10-SCALE RESEARCH MODEL,VSTOL TEST NO. 204

ALPHA	NPR	NPRS	NPRTOT	TOH	THETAJ
RUN = 566					
-.00	1.00	1.00	1.00	.01	39.30
-.00	1.11	1.00	1.08	.67	-28.80
-.00	1.16	1.15	1.16	1.11	-27.39
-.00	1.35	1.36	1.35	1.93	-25.51
.00	1.59	1.62	1.60	2.87	-24.97
.01	1.87	1.90	1.88	4.05	-28.49
.01	2.16	2.19	2.17	5.25	-29.17
.02	2.46	2.50	2.47	6.43	-29.30
.02	2.75	2.80	2.76	7.61	-29.55
.02	3.05	3.10	3.06	8.82	-29.27
.03	3.32	3.39	3.34	9.97	-30.42
.03	3.63	3.69	3.65	11.21	-30.06
RUN = 574					
-.00	1.00	1.00	1.00	.01	89.27
-.00	1.00	1.19	1.19	.20	-32.38
-.00	1.00	1.52	1.52	.49	-22.92
-.01	1.00	1.99	1.99	.84	-23.35
-.00	1.00	2.57	2.57	1.25	-23.98
-.00	1.00	3.10	3.10	1.60	-24.81
-.00	1.00	3.62	3.62	1.91	-26.19
-.00	1.00	4.17	4.17	2.22	-26.03
.00	1.00	4.72	4.72	2.54	-26.62
.00	1.00	5.16	5.16	2.79	-27.06
RUN = 576					
-.00	1.00	1.00	1.00	.06	-62.75
-.00	1.08	1.00	1.08	.56	-2.00
-.00	1.18	1.00	1.18	1.11	-.99
-.00	1.34	1.00	1.34	1.86	-.26
-.00	1.60	1.00	1.60	2.85	1.09
-.01	1.89	1.00	1.89	3.86	2.26
-.01	2.19	1.00	2.19	4.93	2.05
-.01	2.48	1.00	2.48	5.96	1.99
-.01	2.79	1.00	2.79	7.07	1.85
-.01	3.08	1.00	3.08	8.18	2.27
-.01	3.37	1.00	3.37	9.26	2.80
-.01	3.66	1.00	3.66	10.41	3.31

TABLE 4.- CONTINUED.

STATIC DATA FOR THE VEO-WING 1/10-SCALE RESEARCH MODEL,VSTOL TEST NO. 204

ALPHA	NPR	NPPS	NPRTOT	TOH	THETAJ
RUN = 582					
.00	1.00	1.00	1.00	.02	52.38
.00	1.00	1.18	1.18	.20	-19.37
.00	1.00	1.54	1.54	.53	-17.72
.00	1.00	1.97	1.97	.86	-20.64
.01	1.00	2.55	2.55	1.27	-21.54
.01	1.00	3.08	3.08	1.59	-21.74
.01	1.00	3.58	3.58	1.86	-22.45
.01	1.00	4.12	4.12	2.16	-22.76
.01	1.00	4.63	4.63	2.42	-23.52
.01	1.00	5.05	5.05	2.64	-23.16
RUN = 587					
.02	1.00	1.00	1.00	.02	76.22
.02	1.08	1.00	1.08	1.12	-16.71
.02	1.15	1.00	1.15	2.07	-17.70
.00	1.33	1.00	1.33	3.76	-15.89
.01	1.62	1.00	1.62	5.98	-17.18
.03	1.92	1.00	1.92	8.43	-21.09
.01	2.23	1.00	2.23	10.97	-21.66
.01	2.49	1.00	2.49	13.10	-21.22
.02	2.81	1.00	2.81	15.80	-20.39
.03	3.09	1.00	3.09	18.17	-21.49
.03	3.40	1.00	3.40	20.72	-22.36
.01	3.68	1.00	3.68	23.16	-21.88
RUN = 588					
.01	1.00	1.00	1.00	.03	-29.36
.01	1.08	1.00	1.08	1.16	-17.66
.02	1.15	1.00	1.15	2.18	-17.94
.02	1.30	1.00	1.30	3.70	-16.78
.03	1.57	1.00	1.57	5.96	-14.47
.04	1.84	1.00	1.84	8.25	-19.51
.06	2.13	1.00	2.13	10.75	-21.22
.06	2.41	1.00	2.41	13.19	-20.68
.07	2.70	1.00	2.70	15.76	-19.68
.08	2.98	1.00	2.98	18.18	-20.57
-.01	3.26	1.00	3.26	20.69	-21.29
-.00	3.57	1.00	3.57	23.53	-20.46

TABLE 4.- CONTINUED.

STATIC DATA FOR THE VEO-WING 1/10-SCALE RESEARCH MODEL,VSTOL TEST NO. 204

ALPHA	NPR	NPRS	NPRTOT	TOH	THETAJ
RUN = 596					
.00	1.00	1.00	1.00	.01	27.72
.00	1.06	1.00	1.06	1.02	-17.81
.01	1.14	1.00	1.14	2.07	-17.93
.01	1.28	1.00	1.28	3.64	-16.39
.01	1.52	1.00	1.52	5.68	-14.25
.02	1.81	1.00	1.81	8.14	-19.22
.03	2.08	1.00	2.08	10.49	-21.19
.03	2.35	1.00	2.35	12.86	-21.84
.03	2.64	1.00	2.64	15.43	-20.75
.00	2.91	1.00	2.91	17.98	-18.56
.01	3.19	1.00	3.19	20.50	-18.34
.01	3.50	1.00	3.50	23.20	-19.66
RUN = 602					
7.77	1.00	1.00	1.00	.20	36.10
RUN = 603					
.01	1.00	1.00	1.00	.02	36.17
RUN = 604					
.00	1.00	1.00	1.00	.00	-76.67
.01	1.07	1.00	1.07	1.10	-17.19
.01	1.13	1.00	1.13	2.04	-17.03
.01	1.28	1.00	1.28	3.69	-16.33
.02	1.52	1.00	1.52	5.68	-15.32
.03	1.82	1.00	1.82	8.28	-19.79
.03	2.08	1.00	2.08	10.52	-21.31
-.00	2.32	1.00	2.32	12.67	-22.13
.00	2.66	1.00	2.66	15.63	-20.82
.00	2.97	1.00	2.97	18.46	-18.41
.00	3.22	1.00	3.22	20.73	-18.74
.01	3.49	1.00	3.49	23.21	-19.79
RUN = 611					
.00	1.00	1.00	1.00	.05	77.02
.00	1.07	1.00	1.07	1.13	-20.95
.00	1.15	1.00	1.15	2.26	-17.50
.01	1.29	1.00	1.29	3.84	-16.61
.01	1.51	1.00	1.51	5.88	-17.23
.02	1.77	1.00	1.77	8.10	-19.35
.02	2.05	1.00	2.05	10.57	-19.56
.03	2.35	1.00	2.35	13.29	-19.71
.03	2.62	1.00	2.62	15.75	-20.50
.01	2.89	1.00	2.89	18.20	-20.12
.01	3.16	1.00	3.16	20.65	-20.56
.02	3.44	1.00	3.44	23.20	-22.14

TABLE 4.- CONTINUED.

STATIC DATA FOR THE VEO-WING 1/10-SCALE RESEARCH MODEL, VSTOL TEST NO. 204

ALPHA	NPR	NPRS	NPRTOT	TOH	THETAJ
RUN = 618					
.00	1.00	1.00	1.00	.03	66.36
.01	1.07	1.04	1.06	.90	-24.32
.01	1.15	1.13	1.15	1.89	-20.17
.01	1.32	1.32	1.32	3.40	-18.68
.02	1.51	1.52	1.51	4.90	-18.00
.03	1.77	1.79	1.78	6.95	-19.44
.04	2.06	2.09	2.07	9.20	-20.86
.04	2.32	2.35	2.33	11.23	-20.78
.01	2.61	2.64	2.62	13.44	-20.34
.01	2.90	2.94	2.91	15.73	-20.21
.02	3.16	3.20	3.17	17.67	-20.34
.02	3.43	3.48	3.44	19.79	-21.40
RUN = 626					
-.01	1.00	1.00	1.00	.02	-8.20
-.01	1.06	1.03	1.06	.93	-20.23
-.01	1.15	1.13	1.14	1.90	-17.83
-.00	1.30	1.30	1.30	3.26	-15.95
.00	1.51	1.52	1.51	4.87	-14.91
.01	1.77	1.79	1.78	6.90	-17.20
.02	2.05	2.08	2.06	9.06	-19.01
.02	2.32	2.35	2.33	11.15	-18.94
.03	2.59	2.62	2.60	13.22	-18.72
.03	2.89	2.93	2.90	15.56	-18.72
.03	3.16	3.20	3.17	17.62	-18.89
RUN = 633					
-.01	1.00	1.00	1.00	.02	-57.72
-.00	1.07	1.04	1.06	.94	-20.67
-.00	1.15	1.13	1.15	1.92	-18.27
.00	1.30	1.31	1.30	3.33	-17.24
.01	1.53	1.54	1.53	5.06	-16.26
.02	1.77	1.79	1.77	6.93	-18.25
.03	2.06	2.08	2.06	9.20	-19.93
.03	2.34	2.37	2.35	11.36	-19.72
.03	2.59	2.62	2.60	13.32	-19.56
.04	2.87	2.91	2.88	15.48	-19.54
.04	3.14	3.18	3.15	17.55	-19.57
.04	3.45	3.49	3.46	19.93	-20.82

TABLE 4.- CONTINUED.

STATIC DATA FOR THE VEO-WING 1/10-SCALE RESEARCH MODEL,VSTOL TEST NO. 204

ALPHA	NPR	NPRS	NPRTOT	TOH	THETAJ
RUN = 639					
-.07	1.00	1.00	1.00	.02	82.30
.02	1.10	1.00	1.10	1.19	-19.98
.02	1.28	1.00	1.28	2.59	-19.17
.03	1.63	1.00	1.63	4.77	-20.59
.04	2.02	1.00	2.02	7.28	-21.66
.05	2.38	1.00	2.38	9.54	-21.44
.05	2.78	1.00	2.78	12.14	-21.91
.05	3.13	1.00	3.13	14.51	-21.03
.06	3.54	1.00	3.54	17.25	-22.39
.06	3.91	1.00	3.91	19.73	-21.00
.06	4.28	1.00	4.28	22.26	-21.65
.07	4.66	1.00	4.66	24.92	-22.93
RUN = 640					
-.00	1.00	1.00	1.00	.02	21.34
.00	1.05	1.00	1.05	1.07	-14.62
.01	1.12	1.00	1.12	2.13	-15.89
.02	1.23	1.00	1.23	3.60	-18.01
.02	1.49	1.00	1.49	5.72	-19.26
.04	1.78	1.00	1.78	8.19	-20.96
.05	2.05	1.00	2.05	10.60	-22.09
.06	2.33	1.00	2.33	13.13	-23.08
.07	2.60	1.00	2.60	15.70	-24.99
-.01	2.89	1.00	2.89	18.33	-23.01
-.00	3.16	1.00	3.16	20.82	-22.03
-.00	3.44	1.00	3.44	23.40	-20.58
RUN = 642					
-.00	1.00	1.00	1.00	.02	-64.37
.00	1.05	1.00	1.05	1.09	-20.50
.01	1.23	1.00	1.23	3.58	-19.30
.02	1.49	1.00	1.49	5.67	-19.94
.03	1.76	1.00	1.76	7.95	-20.95
.04	2.04	1.00	2.04	10.45	-21.85
.05	2.32	1.00	2.32	13.03	-21.62
-.01	2.60	1.00	2.60	15.69	-21.77
-.00	2.88	1.00	2.88	18.26	-20.37
.00	3.17	1.00	3.17	20.84	-20.82
.01	3.43	1.00	3.43	23.24	-20.35

TABLE 4.- CONCLUDED.

STATIC DATA FOR THE VEO-WING 1/10-SCALE RESEARCH MODEL, VSTOL TEST NO. 204

ALPHA	NPR	NPRS	NPRTOT	TOH	THETAJ
RUN = 649					
-.00	1.00	1.00	1.00	.04	-70.42
-.00	1.05	1.00	1.05	1.03	-18.82
.00	1.11	1.00	1.11	2.03	-18.39
.01	1.21	1.00	1.21	3.29	-18.45
.02	1.45	1.00	1.45	5.19	-19.06
-.00	1.71	1.00	1.71	7.52	-18.89
.00	1.96	1.00	1.96	9.75	-13.66
.01	2.20	1.00	2.20	11.89	-17.23
.02	2.48	1.00	2.48	14.34	-19.70
.03	2.75	1.00	2.75	16.87	-20.30
.04	3.04	1.00	3.04	19.60	-20.40
.05	3.28	1.00	3.28	21.95	-20.29
RUN = 659					
-.00	1.00	1.00	1.00	.00	-88.46
-.00	1.07	1.00	1.07	1.15	-24.29
.00	1.16	1.00	1.16	2.44	-22.52
.01	1.29	1.00	1.29	3.88	-22.08
.01	1.46	1.00	1.46	5.69	-21.96
.01	1.68	1.00	1.68	7.74	-22.07
.02	1.96	1.00	1.96	10.27	-21.94
.03	2.24	1.00	2.24	12.75	-22.24
.00	2.50	1.00	2.50	15.16	-22.36
.01	2.74	1.00	2.74	17.34	-22.35
.02	3.02	1.00	3.02	19.90	-22.51
.03	3.29	1.00	3.29	22.36	-22.56
RUN = 665					
-.00	1.00	1.00	1.00	.00	84.89
.00	1.09	1.00	1.09	1.29	-22.90
.01	1.20	1.00	1.20	2.56	-22.25
.02	1.37	1.00	1.37	4.37	-21.62
.03	1.55	1.00	1.55	6.28	-21.85
.02	1.77	1.00	1.77	8.36	-21.98
.02	2.02	1.00	2.02	10.67	-21.63
.03	2.26	1.00	2.26	12.85	-22.22
.03	2.54	1.00	2.54	15.29	-21.98
.02	2.80	1.00	2.80	17.65	-21.18
.02	3.10	1.00	3.10	20.32	-19.93
.02	3.35	1.00	3.35	23.07	-18.39
.07	3.50	3.55	3.51	21.58	-27.73

TABLE 5

VED-WING 1/10-SCALE RESEARCH MODEL, VSTOL TEST NO. 204

ALPHA	CL	CD	CPM	CLE2	CDE2	CME2	CLCT	CDCT	CMCT	NPR	CT	CTRF	THETAJ
RUN = 153													
-2.00	.0023	.0385	-.0891	.0023	.0385	-.0891	.0023	.0385	-.0891	1.0039	0.0000	0.0000	0.00
-.00	.1685	.0360	.0043	.1685	.0360	.0043	.1685	.0360	.0043	1.0038	0.0000	0.0000	0.00
2.02	.3336	.0378	.0981	.3336	.0378	.0981	.3336	.0378	.0981	1.0035	0.0000	0.0000	0.00
4.02	.4912	.0485	.1962	.4912	.0485	.1962	.4912	.0485	.1962	1.0032	0.0000	0.0000	0.00
6.03	.6638	.0694	.3041	.6638	.0694	.3041	.6638	.0694	.3041	1.0028	0.0000	0.0000	0.00
8.01	.8425	.1063	.3965	.8425	.1063	.3965	.8425	.1063	.3965	1.0022	0.0000	0.0000	0.00
10.04	1.0319	.1537	.4943	1.0319	.1537	.4943	1.0319	.1537	.4943	1.0019	0.0000	0.0000	0.00
12.01	1.2073	.2147	.5908	1.2073	.2147	.5908	1.2073	.2147	.5908	1.0019	0.0000	0.0000	0.00
14.03	1.3678	.2909	.6863	1.3678	.2909	.6863	1.3678	.2909	.6863	1.0018	0.0000	0.0000	0.00
24.05	1.9616	.7602	1.1631	1.9616	.7602	1.1631	1.9616	.7602	1.1631	1.0000	0.0000	0.0000	0.00
RUN = 154													
-3.85	-.2525	-.1623	-.2150	-.2665	.0350	-.1877	-.2521	-.1682	-.2158	1.1340	.1942	.1978	7.89
-1.98	-.0808	-.1813	-.1270	-.1009	.0141	-.0999	-.0800	-.1885	-.1280	1.1329	.1929	.1965	7.88
.00	.0878	-.1889	-.0391	.0608	.0059	-.0120	.0888	-.1959	-.0401	1.1334	.1931	.1967	7.88
2.00	.2625	-.1884	.0515	.2295	.0018	.0781	.2643	-.1988	.0500	1.1299	.1896	.1931	7.85
4.01	.4450	-.1764	.1538	.4052	.0132	.1805	.4471	-.1862	.1524	1.1307	.1902	.1937	7.86
6.01	.6239	-.1536	.2535	.5784	.0308	.2797	.6271	-.1668	.2517	1.1272	.1866	.1900	7.83
8.00	.8081	-.1320	.3427	.7528	.0619	.3705	.8087	-.1341	.3424	1.1383	.1979	.2016	7.92
9.99	1.0042	-.0887	.4408	.9430	.1011	.4683	1.0056	-.0928	.4402	1.1361	.1957	.1994	7.90
12.02	1.1960	-.0294	.5414	1.1303	.1525	.5680	1.1995	-.0390	.5399	1.1302	.1899	.1934	7.86
13.95	1.3673	.0449	.6330	1.2922	.2319	.6608	1.3681	.0428	.6327	1.1379	.1977	.2015	7.92
15.94	1.5280	.1277	.7191	1.4461	.3129	.7470	1.5285	.1265	.7189	1.1387	.1986	.2024	7.92
19.97	1.8499	.3320	.9030	1.7556	.5102	.9308	1.8510	.3300	.9027	1.1372	.1979	.2016	7.91
RUN = 155													
-3.85	-.1130	-.3209	-.2532	-.1403	.1570	-.1810	-.1170	-.2518	-.2428	1.4195	.4676	.4787	7.12
-3.85	-.1129	-.2740	-.2559	-.1403	.2043	-.1837	-.1169	-.2045	-.2454	1.4192	.4680	.4791	7.12
-2.03	.0677	-.3243	-.1709	.0264	.1380	-.1012	.0629	-.2701	-.1627	1.4036	.4531	.4641	7.13
.02	.2556	-.2914	-.0805	.1950	.1926	-.0069	.2586	-.3152	-.0841	1.4283	.4765	.4878	7.12
1.98	.4267	-.1580	.0111	.3523	.3061	.0818	.4171	-.0984	.0202	1.4088	.4590	.4700	7.13
3.99	.6063	-.1240	.1105	.5126	.3531	.1839	.6112	-.1491	.1067	1.4287	.4750	.4862	7.12
5.97	.7783	-.0435	.2107	.6745	.4023	.2793	.7674	.0033	.2179	1.3969	.4469	.4577	7.14
7.98	.9743	-.0981	.3044	.8679	.2948	.3646	.9752	-.1014	.3039	1.3456	.3966	.4070	7.18

TABLE 5.- CONTINUED.

VEO-WING 1/10-SCALE RESEARCH MODEL,VSTOL TEST NO. 204

ALPHA	CL	CD	CPM	CLE2	CDE2	CME2	CLCT	CDCT	CMCT	NPR	CT	CTRF	THETAJ
RUN = 156													
-3.85	-.1176	-.4333	-.2550	-.1459	.0639	-.1796	-.1168	-.4469	-.2570	1.4399	.4867	.4981	7.11
-1.99	.0654	-.4512	-.1689	.0208	.0469	-.0932	.0665	-.4628	-.1707	1.4405	.4886	.5000	7.11
.00	.2491	-.4520	-.0839	.1874	.0422	-.0085	.2508	-.4656	-.0859	1.4398	.4867	.4981	7.11
1.99	.4370	-.4464	.0086	.3582	.0454	.0839	.4392	-.4599	.0065	1.4403	.4866	.4980	7.11
3.99	.6218	-.4305	.1031	.5259	.0583	.1784	.6244	-.4439	.1010	1.4403	.4867	.4981	7.11
5.99	.8134	-.4044	.2037	.7002	.0815	.2792	.8163	-.4169	.2017	1.4407	.4875	.4989	7.11
7.98	1.0045	-.3673	.2967	.8745	.1145	.3722	1.0078	-.3795	.2948	1.4403	.4876	.4990	7.11
9.98	1.2167	-.3116	.3952	1.0701	.1652	.4707	1.2205	-.3240	.3933	1.4396	.4874	.4988	7.11
12.00	1.4172	-.2345	.4950	1.2544	.2351	.5701	1.4220	-.2484	.4927	1.4397	.4856	.4970	7.11
13.97	1.6091	-.1536	.5893	1.4300	.3108	.6646	1.6141	-.1667	.5872	1.4392	.4863	.4977	7.11
15.97	1.7858	-.0591	.6801	1.5900	.4003	.7557	1.7906	-.0705	.6783	1.4394	.4879	.4994	7.11
19.95	2.1195	.1618	.8569	1.8913	.6084	.9328	2.1241	.1528	.8554	1.4395	.4900	.5015	7.11
RUN = 157													
-3.82	-.0832	-.7828	-.3183	-.1346	.1066	-.1994	-.0818	-.8060	-.3214	1.8686	.8771	.8909	7.13
-2.00	.1073	-.7982	-.2337	.0275	.0910	-.1145	.1092	-.8194	-.2365	1.8690	.8791	.8929	7.13
-.01	.3099	-.8059	-.1440	.1985	.0858	-.0242	.3118	-.8212	-.1460	1.8732	.8848	.8986	7.13
1.98	.5101	-.7953	-.0524	.3681	.0903	.0672	.5128	-.8122	-.0546	1.8732	.8831	.8969	7.13
4.00	.7208	-.7765	.0465	.5474	.1051	.1662	.7238	-.7917	.0444	1.8734	.8847	.8985	7.13
5.99	.9249	-.7428	.1475	.7216	.1295	.2669	.9290	-.7607	.1451	1.8738	.8819	.8957	7.13
7.98	1.1359	-.6944	.2432	.9032	.1676	.3622	1.1414	-.7148	.2404	1.8736	.8791	.8928	7.13
9.97	1.3568	-.6377	.3366	1.0927	.2209	.4561	1.3614	-.6527	.3345	1.8810	.8846	.8983	7.13
11.96	1.5747	-.5603	.4340	1.2810	.2883	.5534	1.5799	-.5753	.4319	1.8804	.8843	.8980	7.13
13.98	1.7766	-.4744	.5231	1.4514	.3680	.6432	1.7805	-.4846	.5217	1.8809	.8893	.9030	7.13
15.97	1.9809	-.3660	.6192	1.6268	.4638	.7392	1.9854	-.3768	.6177	1.8815	.8885	.9023	7.13
19.96	2.3670	-.1210	.8062	1.9557	.6833	.9263	2.3718	-.1304	.8048	1.8806	.8896	.9033	7.13
23.99	2.7191	.1763	.9962	2.2515	.9509	1.1166	2.7238	.1685	.9950	1.8799	.8910	.9048	7.13
RUN = 158													
-3.80	-.0335	-1.3540	-.3933	-.1231	.1240	-.1988	-.0378	-1.2840	-.3841	2.5400	1.4696	1.4807	7.26
-1.97	.1787	-1.3619	-.3100	.0425	.1106	-.1158	.1725	-1.2940	-.3010	2.5384	1.4676	1.4787	7.26
-.01	.3990	-1.3616	-.2265	.2120	.1069	-.0320	.3902	-1.2923	-.2173	2.5403	1.4693	1.4804	7.26
1.98	.6246	-1.3519	-.1359	.3857	.1139	.0595	.6288	-1.3777	-.1394	2.5451	1.4741	1.4852	7.28
4.02	.8562	-1.3293	-.0381	.5648	.1294	.1577	.8608	-1.3526	-.0412	2.5461	1.4764	1.4875	7.28
5.99	1.0921	-1.2896	.0617	.7508	.1582	.2574	1.0976	-1.3128	.0586	2.5449	1.4763	1.4874	7.28
8.01	1.3292	-1.2396	.1551	.9368	.1958	.3510	1.3353	-1.2620	.1521	2.5461	1.4769	1.4881	7.28
9.99	1.5720	-1.1704	.2482	1.1304	.2495	.4440	1.5792	-1.1936	.2450	2.5472	1.4758	1.4869	7.28
11.96	1.8137	-1.0801	.3447	1.3245	.3215	.5401	1.8225	-1.1054	.3411	2.5462	1.4734	1.4845	7.28
13.97	2.0497	-.9825	.4376	1.5107	.4035	.6334	2.0584	-1.0050	.4344	2.5472	1.4760	1.4871	7.28
16.01	2.2736	-.8668	.5290	1.6846	.5015	.7251	2.2822	-.8867	.5262	2.5470	1.4786	1.4897	7.28
19.97	2.7183	-.5809	.7079	2.0381	.7399	.9035	2.7301	-.6037	.7046	2.5463	1.4746	1.4857	7.28
23.99	3.1164	-.2492	.8930	2.3469	1.0183	1.0881	3.1312	-.2735	.8893	2.5441	1.4717	1.4828	7.27

TABLE 5.- CONTINUED.

VEO-WING 1/10-SCALE RESEARCH MODEL,VSTOL TEST NO. 204

ALPHA	CL	CD	CPM	CLE2	CDE2	CME2	CLCT	CDCT	CMCT	NPR	CT	CTRF	THETAJ
RUN = 159													
-3.80	.0115	-1.8556	-.4911	-.1259	.1362	-.2011	.0130	-1.8774	-.4943	3.1124	1.9783	1.9966	7.74
-2.00	.2371	-1.8589	-.4066	.0381	.1200	-.1177	.2401	-1.8883	-.4109	3.1126	1.9707	1.9889	7.74
.01	.4794	-1.8599	-.3189	.2104	.1148	-.0294	.4829	-1.8851	-.3226	3.1117	1.9748	1.9930	7.75
1.98	.7183	-1.8477	-.2293	.3811	.1182	.0606	.7223	-1.8712	-.2328	3.1110	1.9764	1.9946	7.75
3.99	.9575	-1.8194	-.1325	.5522	.1307	.1570	.9630	-1.8455	-.1364	3.1109	1.9735	1.9917	7.75
6.00	1.2135	-1.7828	-.0307	.7388	.1544	.2594	1.2192	-1.8060	-.0342	3.1091	1.9763	1.9945	7.76
7.97	1.4638	-1.7261	.0632	.9232	.1937	.3533	1.4703	-1.7491	.0598	3.1097	1.9763	1.9945	7.76
10.01	1.7242	-1.6498	.1594	1.1162	.2479	.4491	1.7320	-1.6743	.1556	3.1097	1.9745	1.9927	7.76
12.00	1.9841	-1.5540	.2591	1.3113	.3188	.5484	1.9937	-1.5807	.2550	3.1104	1.9719	1.9900	7.76
13.96	2.2287	-1.4526	.3538	1.4920	.3972	.6431	2.2388	-1.4780	.3498	3.1110	1.9729	1.9910	7.75
15.99	2.4622	-1.3323	.4475	1.6599	.4907	.7373	2.4729	-1.3566	.4436	3.1085	1.9737	1.9918	7.77
20.00	2.9476	-1.0262	.6366	2.0210	.7332	.9259	2.9615	-1.0527	.6322	3.1081	1.9704	1.9885	7.77
23.98	3.3651	-.6868	.8261	2.3185	1.0045	1.1155	3.3806	-.7118	.8218	3.1078	1.9708	1.9889	7.77
RUN = 160													
7.97	.8126	.1204	.3797	.8126	.1204	.3797	.8126	.1204	.3797	1.0030	0.0000	0.0000	0.00
7.96	.7997	.0346	.3720	.7754	.1270	.3854	.8007	.0307	.3714	1.0360	.0960	.0956	6.75
7.96	.8437	-.0896	.3309	.7899	.0998	.3580	.8456	-.0962	.3299	1.1343	.1932	.1968	7.89
7.98	.9583	-.2802	.3003	.8541	.1042	.3591	.9613	-.2912	.2986	1.3382	.3889	.3983	7.19
7.99	1.0752	-.6210	.2470	.8656	.1563	.3584	1.0776	-.6296	.2458	1.7699	.7912	.8050	7.11
7.99	1.2308	-.9640	.1947	.9203	.1870	.3441	1.2361	-.9836	.1922	2.2083	1.1799	1.1922	7.11
8.00	1.3801	-1.3375	.1403	.9521	.1933	.3581	1.3861	-1.3587	.1372	2.6644	1.5781	1.5895	7.63
8.00	1.4515	-1.7010	.0579	.9130	.2029	.3463	1.4349	-1.6421	.0668	3.1040	1.9606	1.9785	7.80
7.99	1.4616	-2.0825	.0387	.8561	.2261	.3615	1.4489	-2.0343	.0454	3.5299	2.3490	2.3867	6.71
7.98	1.5098	-2.1866	.0133	.8767	.2463	.3503	1.4924	-2.1197	.0225	3.6431	2.4678	2.5139	6.61
RUN = 161													
15.97	2.6140	-1.7885	.4013	1.6469	.5373	.7391	2.6246	-1.8140	.3976	3.6397	2.4728	2.5188	6.61
15.95	2.5296	-1.6855	.4244	1.6151	.5072	.7456	2.5141	-1.6483	.4299	3.4998	2.3397	2.3757	6.69
15.96	2.4548	-1.3384	.4393	1.6522	.4871	.7295	2.4645	-1.3606	.4358	3.1079	1.9760	1.9941	7.77
15.97	2.3308	-.9790	.5094	1.6898	.4857	.7296	2.3359	-.9906	.5076	2.6795	1.5874	1.5988	7.67
15.95	2.1389	-.6352	.5694	1.6672	.4743	.7203	2.1415	-.6412	.5686	2.2275	1.1935	1.2056	7.08
15.95	1.9116	-.3044	.6375	1.6001	.4277	.7482	1.9188	-.3215	.6349	1.7578	.7817	.7956	7.10
15.97	1.5763	.1694	.7211	1.4954	.3521	.7487	1.5779	.1657	.7206	1.1384	.1961	.1998	7.92
15.95	1.4839	.2795	.7529	1.4460	.3698	.7666	1.4846	.2779	.7527	1.0381	.0983	.0980	6.77
15.95	1.4602	.3713	.7554	1.4602	.3713	.7554	1.4602	.3713	.7554	1.0026	0.0000	0.0000	0.00

TABLE 5.- CONTINUED.

VEO-WING 1/10-SCALE RESEARCH MODEL,VSTOL TEST NO. 204

ALPHA	CL	CD	CPM	CLE2	CDE2	CME2	CLCT	CDCT	CMCT	NPR	CT	CTRF	THETAJ
RUN = 163													
-3.81	.1390	.0512	-.2400	.1390	.0512	-.2400	.1390	.0512	-.2400	1.0004	0.0000	0.0000	0.00
-1.96	.3065	.0410	-.1414	.3065	.0410	-.1414	.3065	.0410	-.1414	1.0003	0.0000	0.0000	0.00
.02	.4399	.0469	-.0611	.4399	.0469	-.0611	.4399	.0469	-.0611	1.0000	0.0000	0.0000	0.00
1.99	.5895	.0583	.0280	.5895	.0583	.0280	.5895	.0583	.0280	1.0000	0.0000	0.0000	0.00
4.00	.7664	.0780	.1333	.7664	.0780	.1333	.7664	.0780	.1333	1.0000	0.0000	0.0000	0.00
6.01	.9275	.1084	.2337	.9275	.1084	.2337	.9275	.1084	.2337	1.0000	0.0000	0.0000	0.00
8.03	1.1144	.1559	.3321	1.1144	.1559	.3321	1.1144	.1559	.3321	1.0000	0.0000	0.0000	0.00
10.02	1.2852	.2098	.4320	1.2852	.2098	.4320	1.2852	.2098	.4320	1.0000	0.0000	0.0000	0.00
11.99	1.4490	.2840	.5319	1.4490	.2840	.5319	1.4490	.2840	.5319	1.0000	0.0000	0.0000	0.00
14.00	1.6109	.3706	.6437	1.6109	.3706	.6437	1.6109	.3706	.6437	1.0000	0.0000	0.0000	0.00
15.97	1.7092	.4502	.7249	1.7092	.4502	.7249	1.7092	.4502	.7249	1.0000	0.0000	0.0000	0.00
17.99	1.8124	.5372	.8170	1.8124	.5372	.8170	1.8124	.5372	.8170	1.0000	0.0000	0.0000	0.00
19.98	1.9345	.6346	.9340	1.9345	.6346	.9340	1.9345	.6346	.9340	1.0000	0.0000	0.0000	0.00
21.96	2.0363	.7379	1.0451	2.0363	.7379	1.0451	2.0363	.7379	1.0451	1.0000	0.0000	0.0000	0.00
23.97	2.1267	.8539	1.1333	2.1267	.8539	1.1333	2.1267	.8539	1.1333	1.0000	0.0000	0.0000	0.00
RUN = 164													
-3.77	.3347	-.4315	-.3866	.2349	.0671	-.2692	.3354	-.4348	-.3873	1.4504	.4967	.5085	15.09
-1.99	.5187	-.4306	-.2960	.4037	.0635	-.1789	.5197	-.4350	-.2971	1.4502	.4956	.5073	15.09
.02	.6953	-.4205	-.2085	.5630	.0694	-.0914	.6965	-.4247	-.2096	1.4494	.4957	.5075	15.10
2.02	.8813	-.4023	-.1104	.7322	.0815	.0065	.8830	-.4076	-.1117	1.4488	.4945	.5062	15.10
4.04	1.0627	-.3713	-.0147	.8967	.1070	.1022	1.0645	-.3765	-.0160	1.4486	.4946	.5063	15.11
6.00	1.2507	-.3319	.0833	1.0684	.1404	.2002	1.2527	-.3370	.0820	1.4485	.4946	.5063	15.11
8.01	1.4394	-.2737	.1757	1.2412	.1904	.2923	1.4422	-.2803	.1741	1.4473	.4930	.5047	15.12
9.99	1.6038	-.2112	.2663	1.3896	.2461	.3829	1.6067	-.2174	.2647	1.4477	.4933	.5049	15.11
12.00	1.8109	-.1193	.3864	1.5813	.3288	.5027	1.8147	-.1267	.3845	1.4462	.4918	.5035	15.13
14.00	1.9717	-.0290	.4801	1.7267	.4105	.5964	1.9759	-.0366	.4781	1.4459	.4915	.5031	15.13
15.98	2.1377	.0747	.5830	1.8775	.5057	.6993	2.1420	.0675	.5810	1.4459	.4918	.5035	15.13
19.99	2.4522	.3150	.7821	2.1619	.7277	.8987	2.4564	.3091	.7804	1.4459	.4929	.5046	15.13
24.02	2.6723	.5699	.9760	2.3532	.9618	1.0928	2.6764	.5649	.9745	1.4462	.4937	.5054	15.13
RUN = 165													
-3.64	.4731	-.7215	-.5086	.2708	.1585	-.2942	.4762	-.7353	-.5119	1.8798	.8861	.9030	16.58
-1.98	.6602	-.7215	-.4106	.4322	.1546	-.1958	.6632	-.7330	-.4134	1.8789	.8884	.9053	16.57
.02	.8736	-.6676	-.3186	.6147	.2023	-.1033	.8763	-.6767	-.3208	1.8782	.8907	.9076	16.55
2.01	1.0570	-.6901	-.2349	.7677	.1700	-.0196	1.0601	-.6993	-.2372	1.8797	.8905	.9074	16.58
3.99	1.2672	-.6428	-.1341	.9488	.2061	.0810	1.2709	-.6526	-.1366	1.8788	.8897	.9066	16.57
6.01	1.4720	-.6143	-.0307	1.1244	.2215	.1841	1.4766	-.6253	-.0335	1.8789	.8883	.9052	16.57
8.01	1.6742	-.5065	.0658	1.2976	.3167	.2806	1.6791	-.5173	.0630	1.8789	.8883	.9052	16.57
10.01	1.8811	-.4768	.1643	1.4754	.3332	.3794	1.8861	-.4868	.1616	1.8801	.8890	.9059	16.59
12.00	2.0805	-.3986	.2751	1.6481	.3956	.4897	2.0866	-.4099	.2721	1.8786	.8874	.9043	16.56
14.02	2.2553	-.2923	.3761	1.7937	.4874	.5913	2.2609	-.3018	.3735	1.8808	.8892	.9061	16.60
19.97	2.7715	.0825	.6775	2.2317	.8116	.8926	2.7774	.0745	.6751	1.8774	.8902	.9072	16.54
23.97	3.0383	.3678	.8714	2.4488	1.0571	1.0866	3.0448	.3601	.8690	1.8788	.8901	.9070	16.57

TABLE 5.- CONTINUED.

VEO-WING 1/10-SCALE RESEARCH MODEL, VSTOL TEST NO. 204

ALPHA	CL	CD	CPM	CLE2	CDE2	CME2	CLCT	CDCT	CMCT	NPR	CT	CTRF	THETAJ
RUN = 166													
-2.00	.8812	-1.1237	-.5733	.3992	.2972	-.1784	.8889	-1.1462	-.5795	2.5462	1.4766	1.5004	20.75
1.99	1.3263	-1.1746	-.3845	.7434	.2166	.0125	1.3324	-1.1892	-.3887	2.5503	1.4845	1.5084	20.74
5.99	1.7249	-1.0647	-.1959	1.0559	.2635	.1955	1.6959	-1.0070	-.1789	2.5462	1.4636	1.4872	20.75
7.98	1.9677	-.9841	-.0946	1.2461	.3325	.3005	1.9787	-1.0041	-.1006	2.5466	1.4775	1.5014	20.75
9.99	2.1962	-.8832	.0176	1.4365	.3941	.4087	2.1637	-.8286	.0343	2.5442	1.4626	1.4862	20.75
14.02	2.5726	-.6890	.2090	1.7205	.5385	.6023	2.5896	-.7136	.2011	2.5499	1.4706	1.4943	20.74
15.99	2.7810	-.5432	.3216	1.8873	.6542	.7149	2.7990	-.5672	.3137	2.5453	1.4705	1.4942	20.75
23.93	3.5019	.0089	.7207	2.4471	1.0754	1.1154	3.5189	-.0083	.7143	2.5433	1.4762	1.5000	20.75
RUN = 167													
.00	1.2071	-1.5799	-.6111	.5509	.2914	-.1093	1.1914	-1.5353	-.5991	3.0760	1.9464	1.9830	19.32
2.00	1.4506	-1.5686	-.5122	.7283	.2810	-.0095	1.4324	-1.5221	-.4995	3.0783	1.9490	1.9857	19.33
4.02	1.6679	-1.5416	-.4184	.8838	.2768	.0823	1.6502	-1.5006	-.4071	3.0691	1.9438	1.9802	19.30
6.00	1.9051	-1.4827	-.3132	1.0617	.3013	.1855	1.8890	-1.4485	-.3037	3.0671	1.9371	1.9733	19.30
7.99	2.1350	-1.3869	-.2140	1.2310	.3662	.2842	2.1181	-1.3540	-.2047	3.0622	1.9363	1.9724	19.29
10.01	2.3655	-1.3262	-.1153	1.4011	.3930	.3824	2.3480	-1.2949	-.1063	3.0596	1.9352	1.9713	19.28
14.00	2.8431	-1.2368	.0881	1.7405	.4373	.5970	2.8054	-1.1796	.1055	3.0985	1.9672	2.0046	19.37
16.00	3.0550	-1.0936	.1889	1.8962	.5388	.6972	3.0169	-1.0400	.2056	3.0987	1.9646	2.0019	19.37
19.97	3.4655	-.7775	.3887	2.1958	.7715	.8969	3.4231	-.7258	.4056	3.0962	1.9656	2.0029	19.37
23.97	3.7882	-.4349	.5942	2.4117	1.0247	1.1030	3.7400	-.3837	.6121	3.0910	1.9691	2.0063	19.35
RUN = 168													
-3.76	.3147	.0711	-.2495	.3147	.0711	-.2495	.3147	.0711	-.2495	1.0000	0.0000	0.0000	0.00
-2.02	.4392	.0751	-.1819	.4392	.0751	-.1819	.4392	.0751	-.1819	1.0000	0.0000	0.0000	0.00
-.01	.5935	.0816	-.0914	.5935	.0816	-.0914	.5935	.0816	-.0914	1.0000	0.0000	0.0000	0.00
2.01	.7617	.0953	.0043	.7617	.0953	.0043	.7617	.0953	.0043	1.0000	0.0000	0.0000	0.00
3.98	.9516	.1262	.1007	.9516	.1262	.1007	.9516	.1262	.1007	1.0000	0.0000	0.0000	0.00
5.99	1.1223	.1620	.2043	1.1223	.1620	.2043	1.1223	.1620	.2043	1.0000	0.0000	0.0000	0.00
8.01	1.2956	.2170	.2974	1.2956	.2170	.2974	1.2956	.2170	.2974	1.0000	0.0000	0.0000	0.00
10.03	1.4679	.2808	.3978	1.4679	.2808	.3978	1.4679	.2808	.3978	1.0000	0.0000	0.0000	0.00
11.99	1.6312	.3577	.5057	1.6312	.3577	.5057	1.6312	.3577	.5057	1.0000	0.0000	0.0000	0.00
14.00	1.7434	.4332	.6012	1.7434	.4332	.6012	1.7434	.4332	.6012	1.0000	0.0000	0.0000	0.00
16.00	1.8531	.5203	.7018	1.8531	.5203	.7018	1.8531	.5203	.7018	1.0002	0.0000	0.0000	0.00
18.01	1.9752	.6250	.8128	1.9752	.6250	.8128	1.9752	.6250	.8128	1.0012	0.0000	0.0000	0.00
20.00	2.0707	.7257	.9148	2.0707	.7257	.9148	2.0707	.7257	.9148	1.0001	0.0000	0.0000	0.00
22.00	2.1550	.8282	1.0199	2.1550	.8282	1.0199	2.1550	.8282	1.0199	1.0000	0.0000	0.0000	0.00
23.99	2.2355	.9461	1.1119	2.2355	.9461	1.1119	2.2355	.9461	1.1119	1.0000	0.0000	0.0000	0.00

TABLE 5.- CONTINUED.

VEO-WING 1/10-SCALE RESEARCH MODEL, VSTOL TEST NO. 204

ALPHA	CL	CD	CPM	CLE2	CDE2	CME2	CLCT	CDCT	CMCT	NPR	CT	CTRF	THETAJ
RUN = 170													
-3.74	.5856	-.3835	-.4452	.4448	.1056	-.3076	.5834	-.3760	-.4431	1.4392	.5078	.5090	19.80
-1.97	.7603	-.3807	-.3618	.6047	.1032	-.2244	.7581	-.3739	-.3598	1.4387	.5071	.5083	19.80
.04	.9411	-.3661	-.2667	.7683	.1125	-.1292	.9385	-.3589	-.2646	1.4396	.5076	.5088	19.80
2.01	1.1151	-.3471	-.1754	.9251	.1274	-.0372	1.1113	-.3377	-.1726	1.4419	.5101	.5112	19.81
4.02	1.2971	-.3097	-.0719	1.0910	.1569	.0660	1.2934	-.3015	-.0694	1.4407	.5090	.5101	19.81
6.03	1.5018	-.2612	.0346	1.2792	.1987	.1728	1.4975	-.2522	.0373	1.4416	.5099	.5109	19.81
8.01	1.6791	-.2007	.1328	1.4409	.2509	.2708	1.6747	-.1923	.1354	1.4412	.5094	.5105	19.81
10.05	1.8903	-.1217	.2449	1.6359	.3214	.3831	1.8854	-.1131	.2476	1.4417	.5099	.5110	19.81
11.96	2.0488	-.0287	.3372	1.7806	.4045	.4749	2.0444	-.0215	.3395	1.4404	.5084	.5096	19.80
13.99	2.2178	.0756	.4368	1.9340	.4997	.5747	2.2127	.0333	.4392	1.4412	.5092	.5103	19.81
19.97	2.6714	.4282	.7370	2.3438	.8215	.8754	2.6644	.4365	.7400	1.4421	.5108	.5119	19.81
23.98	2.7976	.6659	.9261	2.4438	1.0350	1.0644	2.7905	.6734	.9289	1.4431	.5103	.5113	19.81
6.00	1.4890	-.2475	.0219	1.2669	.2119	.1599	1.4850	-.2392	.0245	1.4420	.5092	.5103	19.81
11.99	2.0436	-.0298	.3236	1.7745	.4043	.4617	2.0385	-.0216	.3263	1.4407	.5097	.5108	19.81
4.00	1.3010	-.3013	-.0782	1.0943	.1671	.0602	1.2966	-.2913	-.0753	1.4417	.5109	.5119	19.81
19.96	2.6508	.4158	.7218	2.3226	.8102	.8605	2.6431	.4251	.7251	1.4422	.5121	.5131	19.81
18.02	2.5472	.3067	.6246	2.2338	.7103	.7628	2.5410	.3146	.6273	1.4423	.5100	.5110	19.81
15.99	2.3697	.1892	.5040	2.0714	.6030	.6419	2.3644	.1965	.5064	1.4403	.5090	.5102	19.80
RUN = 171													
-1.99	1.4492	-1.6785	-.8759	.6081	.1663	-.2370	1.4456	-1.6705	-.8731	3.0608	2.0088	2.0273	26.51
.02	1.6744	-1.6531	-.7884	.7627	.1737	-.1450	1.6643	-1.6328	-.7812	3.0761	2.0224	2.0415	26.51
2.02	1.9037	-1.6092	-.6984	.9260	.1896	-.0533	1.8903	-1.5844	-.6896	3.0823	2.0279	2.0473	26.51
4.00	2.1403	-1.5381	-.5894	1.1051	.2191	.0532	2.1300	-1.5205	-.5830	3.0791	2.0203	2.0395	26.51
3.97	2.1372	-1.5451	-.5970	1.0977	.2211	.0488	2.1218	-1.5189	-.5874	3.0784	2.0301	2.0494	26.51
5.99	2.3905	-1.4716	-.4897	1.2873	.2605	.1574	2.3720	-1.4424	-.4788	3.0793	2.0342	2.0536	26.51
8.01	2.6227	-1.3671	-.3839	1.4651	.3163	.2599	2.6091	-1.3473	-.3764	3.0780	2.0237	2.0430	26.51
10.00	2.8444	-1.2660	-.2911	1.6221	.3851	.3563	2.8234	-1.2377	-.2800	3.0828	2.0349	2.0544	26.51
11.98	3.0590	-1.1362	-.1740	1.7858	.4653	.4707	3.0422	-1.1151	-.1655	3.0768	2.0268	2.0460	26.51
13.97	3.2494	-.9866	-.0741	1.9237	.5671	.5695	3.2342	-.9688	-.0667	3.0760	2.0232	2.0424	26.51
15.97	3.4860	-.8186	.0244	2.1061	.6882	.6682	3.4697	-.8008	.0320	3.0777	2.0240	2.0432	26.51
19.96	3.8588	-.4491	.2280	2.3768	.9569	.8722	3.8405	-.4317	.2359	3.0770	2.0250	2.0443	26.51
23.98	4.0353	-.1240	.4269	2.4564	1.1782	1.0719	4.0140	-.1065	.4356	3.0767	2.0274	2.0466	26.51

TABLE 5.- CONTINUED.

VEO-WING 1/10-SCALE RESEARCH MODEL,VSTOL TEST NO. 204

ALPHA	CL	CD	CPM	CLE2	CDE2	CME2	CLCT	CDCT	CMCT	NPR	CT	CTRF	THETAJ
RUN = 172													
-2.70	1.1577	-1.1655	-.7490	.5410	.2333	-.2625	1.1468	-1.1405	-.7403	2.5238	1.5272	1.5287	26.49
.00	1.4348	-1.0961	-.6269	.7553	.2676	-.1422	1.4248	-1.0760	-.6198	2.5163	1.5224	1.5237	26.48
2.01	1.6388	-1.0459	-.5320	.9146	.2888	-.0491	1.6304	-1.0306	-.5264	2.5093	1.5175	1.5185	26.48
3.99	1.8643	-1.0065	-.4216	1.0972	.2974	.0595	1.8583	-.9963	-.4178	2.5097	1.5118	1.5129	26.48
5.99	2.0914	-.9889	-.3416	1.2602	.3155	.1513	2.0675	-.9513	-.3274	2.5483	1.5445	1.5467	26.52
7.99	2.3004	-.8957	-.2247	1.4416	.3553	.2579	2.2911	-.8823	-.2195	2.5133	1.5163	1.5175	26.48
10.00	2.4886	-.7960	-.1373	1.5790	.4336	.3495	2.4719	-.7735	-.1283	2.5250	1.5280	1.5295	26.49
11.97	2.7253	-.6905	-.0132	1.7745	.5070	.4735	2.7085	-.6687	-.0043	2.5245	1.5278	1.5293	26.49
13.99	2.8784	-.5294	.0693	1.8841	.6353	.5568	2.8590	-.5067	.0788	2.5261	1.5299	1.5314	26.50
16.00	3.1373	-.4227	.1848	2.1054	.7036	.6710	3.1197	-.4035	.1931	2.5243	1.5261	1.5275	26.49
19.94	3.4675	-.1289	.3877	2.3617	.9230	.8733	3.4495	-.1119	.3955	2.5231	1.5247	1.5262	26.49
23.94	3.6340	.1616	.5880	2.4519	1.1384	1.0760	3.6094	.1820	.5982	2.5240	1.5319	1.5334	26.49
-2.03	1.2604	-1.1972	-.7088	.6247	.1995	-.2203	1.2468	-1.1672	-.6983	2.5281	1.5330	1.5346	26.50
.01	1.4435	-1.1506	-.6316	.7589	.2221	-.1433	1.4291	-1.1216	-.6213	2.5274	1.5324	1.5340	26.50
2.01	1.6685	-1.1094	-.5298	.9364	.2386	-.0415	1.6530	-1.0809	-.5195	2.5278	1.5324	1.5340	26.50
4.05	1.8630	-1.0260	-.4303	1.0850	.2922	.0568	1.8481	-1.0009	-.4210	2.5241	1.5292	1.5307	26.49
6.03	2.0899	-.9807	-.3302	1.2674	.3094	.1567	2.0746	-.9566	-.3211	2.5224	1.5286	1.5300	26.49
4.00	1.8956	-1.0187	-.4038	1.1240	.2917	.0800	1.8857	-1.0020	-.3976	2.5181	1.5194	1.5207	26.49
RUN = 173													
-3.78	.2808	.3271	-.2688	.2808	.3271	-.2688	.2808	.3271	-.2688	1.0013	0.0000	0.0000	0.00
-1.98	.4288	.2957	-.1872	.4288	.2957	-.1872	.4288	.2957	-.1872	1.0016	0.0000	0.0000	0.00
.04	.5976	.2973	-.0746	.5976	.2973	-.0746	.5976	.2973	-.0746	1.0016	0.0000	0.0000	0.00
2.02	.7413	.3069	.0114	.7413	.3069	.0114	.7413	.3069	.0114	1.0021	0.0000	0.0000	0.00
4.00	.9076	.3422	.1040	.9076	.3422	.1040	.9076	.3422	.1040	1.0010	0.0000	0.0000	0.00
6.03	1.0738	.3675	.1983	1.0738	.3675	.1983	1.0738	.3675	.1983	1.0005	0.0000	0.0000	0.00
8.04	1.2875	.4244	.3326	1.2875	.4244	.3326	1.2875	.4244	.3326	1.0013	0.0000	0.0000	0.00
10.02	1.4074	.4761	.4069	1.4074	.4761	.4069	1.4074	.4761	.4069	1.0023	0.0000	0.0000	0.00
11.98	1.5769	.5308	.5079	1.5769	.5308	.5079	1.5769	.5308	.5079	1.0000	0.0000	0.0000	0.00
13.97	1.6504	.6049	.5964	1.6504	.6049	.5964	1.6504	.6049	.5964	1.0030	0.0000	0.0000	0.00
15.97	1.7662	.7028	.6967	1.7662	.7028	.6967	1.7662	.7028	.6967	1.0032	0.0000	0.0000	0.00
17.95	1.8571	.7579	.7766	1.8571	.7579	.7766	1.8571	.7579	.7766	1.0033	0.0000	0.0000	0.00
20.04	1.9730	.8902	.8961	1.9730	.8902	.8961	1.9730	.8902	.8961	1.0037	0.0000	0.0000	0.00
23.97	2.1268	1.1178	1.0869	2.1268	1.1178	1.0869	2.1268	1.1178	1.0869	1.0025	0.0000	0.0000	0.00

TABLE 5.- CONTINUED.

VEO-WING 1/10-SCALE RESEARCH MODEL, VSTOL TEST NO. 204

ALPHA	CL	CD	CPM	CLE2	CDE2	CME2	CLCT	CDCT	CMCT	NPR	CT	CTRF	THETAJ
RUN = 174													
-3.79	.2783	.1608	-.2746	.2783	.1608	-.2746	.2783	.1608	-.2746	1.0016	0.0000	0.0000	0.00
-1.95	.4526	.1579	-.1746	.4526	.1579	-.1746	.4526	.1579	-.1746	1.0000	0.0000	0.0000	0.00
.03	.5741	.1641	-.1005	.5741	.1641	-.1005	.5741	.1641	-.1005	1.0008	0.0000	0.0000	0.00
2.04	.7345	.1766	-.0024	.7345	.1766	-.0024	.7345	.1766	-.0024	1.0000	0.0000	0.0000	0.00
4.02	.9442	.2053	.1050	.9442	.2053	.1050	.9442	.2053	.1050	1.0000	0.0000	0.0000	0.00
6.02	1.0981	.2416	.1969	1.0981	.2416	.1969	1.0981	.2416	.1969	1.0000	0.0000	0.0000	0.00
7.97	1.2557	.2848	.2898	1.2557	.2848	.2898	1.2557	.2848	.2898	1.0000	0.0000	0.0000	0.00
9.98	1.4309	.3387	.3929	1.4309	.3387	.3929	1.4309	.3387	.3929	1.0000	0.0000	0.0000	0.00
12.00	1.6014	.3387	.4854	1.6014	.3387	.4854	1.6014	.3387	.4854	1.0000	0.0000	0.0000	0.00
13.98	1.7216	.5054	.6006	1.7216	.5054	.6006	1.7216	.5054	.6006	1.0000	0.0000	0.0000	0.00
15.98	1.8068	.5917	.6982	1.8068	.5917	.6982	1.8068	.5917	.6982	1.0000	0.0000	0.0000	0.00
17.97	1.9104	.6764	.7879	1.9104	.6764	.7879	1.9104	.6764	.7879	1.0000	0.0000	0.0000	0.00
19.99	2.0331	.7933	.9094	2.0331	.7933	.9094	2.0331	.7933	.9094	1.0000	0.0000	0.0000	0.00
23.99	2.2093	1.0202	1.0998	2.2093	1.0202	1.0998	2.2093	1.0202	1.0998	1.0000	0.0000	0.0000	0.00
RUN = 175													
-3.75	.3205	.1828	-.2547	.3205	.1828	-.2547	.3205	.1828	-.2547	1.0000	0.0000	0.0000	0.00
-1.97	.4569	.1856	-.1811	.4569	.1856	-.1811	.4569	.1856	-.1811	1.0000	0.0000	0.0000	0.00
.01	.6023	.1919	-.0876	.6023	.1919	-.0876	.6023	.1919	-.0876	1.0000	0.0000	0.0000	0.00
1.99	.7542	.2092	.0019	.7542	.2092	.0019	.7542	.2092	.0019	1.0000	0.0000	0.0000	0.00
4.01	.9467	.2355	.0999	.9467	.2355	.0999	.9467	.2355	.0999	1.0000	0.0000	0.0000	0.00
6.01	1.1074	.2739	.1949	1.1074	.2739	.1949	1.1074	.2739	.1949	1.0000	0.0000	0.0000	0.00
7.98	1.2716	.3223	.2900	1.2716	.3223	.2900	1.2716	.3223	.2900	1.0000	0.0000	0.0000	0.00
9.98	1.4379	.3918	.3922	1.4379	.3918	.3922	1.4379	.3918	.3922	1.0000	0.0000	0.0000	0.00
12.02	1.6331	.4640	.5199	1.6331	.4640	.5199	1.6331	.4640	.5199	1.0000	0.0000	0.0000	0.00
14.01	1.7256	.5376	.6041	1.7256	.5376	.6041	1.7256	.5376	.6041	1.0000	0.0000	0.0000	0.00
15.96	1.8124	.6192	.6988	1.8124	.6192	.6988	1.8124	.6192	.6988	1.0000	0.0000	0.0000	0.00
18.01	1.9154	.7204	.7978	1.9154	.7204	.7978	1.9154	.7204	.7978	1.0000	0.0000	0.0000	0.00
20.01	2.0180	.8294	.9010	2.0180	.8294	.9010	2.0180	.8294	.9010	1.0000	0.0000	0.0000	0.00
24.01	2.1892	1.0523	1.0941	2.1892	1.0523	1.0941	2.1892	1.0523	1.0941	1.0000	0.0000	0.0000	0.00

TABLE 5.- CONTINUED.

VEO-WING 1/10-SCALE RESEARCH MODEL, VSTOL TEST NO. 204

ALPHA	CL	CD	CPM	CLE2	CDE2	CME2	CLCT	CDCT	CMCT	NPR	CT	CTRF	THETAJ
RUN = 176													
-3.54	.2896	.0573	-.2610	.2896	.0573	-.2610	.2896	.0573	-.2610	1.0000	0.0000	0.0000	0.00
-1.98	.4177	.0570	-.1838	.4177	.0570	-.1838	.4177	.0570	-.1838	1.0000	0.0000	0.0000	0.00
.00	.5827	.0598	-.0916	.5827	.0598	-.0916	.5827	.0598	-.0916	1.0000	0.0000	0.0000	0.00
1.97	.7596	.0619	.0145	.7596	.0619	.0145	.7596	.0619	.0145	1.0000	0.0000	0.0000	0.00
4.02	.9527	.0880	.1158	.9527	.0880	.1158	.9527	.0880	.1158	1.0000	0.0000	0.0000	0.00
6.01	1.1023	.1224	.1995	1.1023	.1224	.1995	1.1023	.1224	.1995	1.0000	0.0000	0.0000	0.00
7.99	1.2960	.1516	.3154	1.2960	.1516	.3154	1.2960	.1516	.3154	1.0000	0.0000	0.0000	0.00
10.02	1.4640	.1888	.3984	1.4640	.1888	.3984	1.4640	.1888	.3984	1.0000	0.0000	0.0000	0.00
11.97	1.6340	.2351	.5019	1.6340	.2351	.5019	1.6340	.2351	.5019	1.0000	0.0000	0.0000	0.00
14.03	1.7481	.2857	.6045	1.7481	.2857	.6045	1.7481	.2857	.6045	1.0000	0.0000	0.0000	0.00
16.01	1.8425	.4169	.6926	1.8425	.4169	.6926	1.8425	.4169	.6926	1.0000	0.0000	0.0000	0.00
17.96	1.9603	.4986	.7882	1.9603	.4986	.7882	1.9603	.4986	.7882	1.0000	0.0000	0.0000	0.00
20.01	2.0824	.5974	.9005	2.0824	.5974	.9005	2.0824	.5974	.9005	1.0000	0.0000	0.0000	0.00
24.05	2.3102	.7550	1.0919	2.3102	.7550	1.0919	2.3102	.7550	1.0919	1.0000	0.0000	0.0000	0.00
RUN = 177													
-3.68	.3065	.0643	-.2576	.3065	.0643	-.2576	.3065	.0643	-.2576	1.0000	0.0000	0.0000	0.00
-2.02	.4254	.0658	-.1901	.4254	.0658	-.1901	.4254	.0658	-.1901	1.0000	0.0000	0.0000	0.00
.04	.5832	.0738	-.0942	.5832	.0738	-.0942	.5832	.0738	-.0942	1.0000	0.0000	0.0000	0.00
2.00	.7568	.0864	.0075	.7568	.0864	.0075	.7568	.0864	.0075	1.0000	0.0000	0.0000	0.00
4.04	.9528	.1185	.1044	.9528	.1185	.1044	.9528	.1185	.1044	1.0000	0.0000	0.0000	0.00
5.99	1.1141	.1567	.1981	1.1141	.1567	.1981	1.1141	.1567	.1981	1.0000	0.0000	0.0000	0.00
8.03	1.2904	.2019	.2954	1.2904	.2019	.2954	1.2904	.2019	.2954	1.0000	0.0000	0.0000	0.00
9.98	1.4490	.2589	.3905	1.4490	.2589	.3905	1.4490	.2589	.3905	1.0000	0.0000	0.0000	0.00
12.03	1.6312	.3251	.5062	1.6312	.3251	.5062	1.6312	.3251	.5062	1.0000	0.0000	0.0000	0.00
13.96	1.7525	.4101	.6099	1.7525	.4101	.6099	1.7525	.4101	.6099	1.0000	0.0000	0.0000	0.00
15.96	1.8404	.4701	.7005	1.8404	.4701	.7005	1.8404	.4701	.7005	1.0000	0.0000	0.0000	0.00
18.03	1.9537	.5716	.7990	1.9537	.5716	.7990	1.9537	.5716	.7990	1.0000	0.0000	0.0000	0.00
23.99	2.2399	.9639	1.1027	2.2399	.9639	1.1027	2.2399	.9639	1.1027	1.0000	0.0000	0.0000	0.00

TABLE 5.- CONTINUED.

VEO-WING 1/10-SCALE RESEARCH MODEL, VSTOL TEST NO. 204

ALPHA	CL	CD	CPM	CLE2	CDE2	CME2	CLCT	CDCT	CMCT	NPR	CT	CTRF	THETAJ
RUN = 178													
-3.67	.2867	.0758	-.2600	.2867	.0758	-.2600	.2867	.0758	-.2600	1.0000	0.0000	0.0000	0.00
-1.96	.4286	.0772	-.1876	.4286	.0772	-.1876	.4286	.0772	-.1876	1.0000	0.0000	0.0000	0.00
.03	.5692	.0844	-.0990	.5692	.0844	-.0990	.5692	.0844	-.0990	1.0000	0.0000	0.0000	0.00
2.05	.7208	.1037	-.0110	.7208	.1037	-.0110	.7208	.1037	-.0110	1.0000	0.0000	0.0000	0.00
4.00	.9329	.1307	.0934	.9329	.1307	.0934	.9329	.1307	.0934	1.0000	0.0000	0.0000	0.00
6.05	1.0975	.1723	.1926	1.0975	.1723	.1926	1.0975	.1723	.1926	1.0000	0.0000	0.0000	0.00
8.01	1.2666	.2266	.2897	1.2666	.2266	.2897	1.2666	.2266	.2897	1.0000	0.0000	0.0000	0.00
10.03	1.4600	.2935	.4036	1.4600	.2935	.4036	1.4600	.2935	.4036	1.0000	0.0000	0.0000	0.00
12.03	1.6189	.3728	.5048	1.6189	.3728	.5048	1.6189	.3728	.5048	1.0000	0.0000	0.0000	0.00
14.02	1.7277	.4433	.6032	1.7277	.4433	.6032	1.7277	.4433	.6032	1.0000	0.0000	0.0000	0.00
16.04	1.8247	.5292	.7006	1.8247	.5292	.7006	1.8247	.5292	.7006	1.0000	0.0000	0.0000	0.00
18.06	1.9399	.6253	.7977	1.9399	.6253	.7977	1.9399	.6253	.7977	1.0000	0.0000	0.0000	0.00
20.05	2.0572	.7329	.9089	2.0572	.7329	.9089	2.0572	.7329	.9089	1.0000	0.0000	0.0000	0.00
24.01	2.2119	.9498	1.0911	2.2119	.9498	1.0911	2.2119	.9498	1.0911	1.0000	0.0000	0.0000	0.00
RUN = 179													
-3.64	1.1945	-1.6740	-.9190	.4791	.2142	-.3042	1.1806	-1.6374	-.9071	1.9446	2.0395	2.0193	24.39
-2.01	1.3820	-1.6316	-.8471	.6137	.2339	-.2328	1.3677	-1.5970	-.8356	1.9441	2.0378	2.0176	24.39
-.01	1.6521	-1.5911	-.7308	.8193	.2460	-.1167	1.6368	-1.5575	-.7196	1.9439	2.0374	2.0171	24.39
2.07	1.8414	-1.5349	-.6575	.9440	.2691	-.0442	1.8259	-1.5037	-.6469	1.9415	2.0352	2.0149	24.38
3.98	2.0659	-1.4825	-.5582	1.1079	.2922	.0556	2.0485	-1.4502	-.5471	1.9411	2.0371	2.0168	24.38
6.03	2.3081	-1.4050	-.4589	1.2868	.3352	.1553	2.2890	-1.3725	-.4474	1.9411	2.0381	2.0177	24.38
8.05	2.5894	-1.2968	-.3353	1.5072	.4061	.2790	2.5692	-1.2651	-.3238	1.9433	2.0380	2.0177	24.39
10.03	2.7917	-1.1893	-.2455	1.6533	.4728	.3677	2.7722	-1.1608	-.2350	1.9416	2.0348	2.0145	24.38
12.01	2.9765	-1.0616	-.1473	1.7821	.5595	.4655	2.9566	-1.0346	-.1371	1.9402	2.0339	2.0136	24.37
14.08	3.1898	-.9205	-.0235	1.9370	.6571	.5896	3.1684	-.8935	-.0130	1.9411	2.0348	2.0145	24.38
16.03	3.3815	-.7634	.0638	2.0801	.7664	.6749	3.3631	-.7417	.0725	1.9375	2.0287	2.0084	24.36
18.00	3.6113	-.5983	.1686	2.2565	.8869	.7804	3.5909	-.5759	.1778	1.9398	2.0306	2.0103	24.37
19.99	3.7554	-.4305	.2639	2.3547	1.0024	.8735	3.7387	-.4135	.2711	1.9372	2.0241	2.0038	24.36
24.00	3.9065	-.1269	.4612	2.4091	1.2043	1.0708	3.8888	-.1112	.4684	1.9371	2.0238	2.0036	24.36
RUN = 180													
4.01	2.1310	-1.4854	-.5862	1.0881	.2837	.0609	2.1134	-1.4556	-.5753	3.0756	2.0342	2.0536	26.51
6.01	2.3560	-1.4005	-.4841	1.2570	.3236	.1601	2.3421	-1.3788	-.4760	3.0641	2.0255	2.0445	26.51
8.02	2.5961	-1.3024	-.3778	1.4396	.3787	.2651	2.5838	-1.2845	-.3710	3.0629	2.0215	2.0404	26.51
10.02	2.8323	-1.1706	-.2617	1.6219	.4634	.3791	2.8235	-1.1587	-.2570	3.0606	2.0146	2.0335	26.51
12.01	3.0106	-1.0487	-.1722	1.7432	.5435	.4690	3.0004	-1.0359	-.1671	3.0596	2.0163	2.0351	26.51
14.01	3.2152	-.9211	-.0613	1.8937	.6253	.5797	3.2052	-.9094	-.0564	3.0613	2.0153	2.0342	26.51
16.10	3.4879	-.7177	.0448	2.1109	.7795	.6858	3.4774	-.7063	.0497	3.0585	2.0153	2.0341	26.51
17.98	3.6365	-.5709	.1130	2.2130	.8783	.7530	3.6276	-.5618	.1169	3.0596	2.0126	2.0314	26.51
19.99	3.8308	-.4051	.2327	2.3546	.9959	.8739	3.8188	-.3937	.2379	3.0589	2.0164	2.0352	26.51

TABLE 5.- CONTINUED.

VEO-WING 1/10-SCALE RESEARCH MODEL,VSTOL TEST NO. 204

ALPHA	CL	CD	CPM	CLE2	CDE2	CME2	CLCT	CDCT	CMCT	NPR	CT	CTRF	THETAJ
RUN = 181													
6.03	2.3459	-1.1714	-.4815	1.2420	.5297	.1798	2.3422	-1.1657	-.4792	3.5807	2.0068	2.0280	26.95
8.01	2.5478	-1.0981	-.4027	1.3809	.5707	.2613	2.5390	-1.0856	-.3977	3.5799	2.0151	2.0364	26.95
10.09	2.7975	-.9763	-.2735	1.5732	.6462	.3890	2.7906	-.9672	-.2698	3.5760	2.0113	2.0326	26.95
12.00	2.9558	-.8773	-.1942	1.6776	.7043	.4687	2.9480	-.8677	-.1901	3.5769	2.0122	2.0335	26.95
14.06	3.1719	-.7405	-.0838	1.8306	.8016	.5828	3.1570	-.7234	-.0764	3.5834	2.0225	2.0438	26.95
16.03	3.3762	-.5808	.0128	1.9934	.9032	.6741	3.3712	-.5755	.0152	3.5788	2.0072	2.0284	26.95
18.07	3.5847	-.4101	.1139	2.1516	1.0220	.7744	3.5813	-.4067	.1154	3.5795	2.0048	2.0259	26.95
20.05	3.7430	-.2401	.2129	2.2586	1.1440	.8746	3.7369	-.2344	.2156	3.5790	2.0083	2.0295	26.95
24.05	3.9342	.0710	.4178	2.3550	1.3498	1.0801	3.9258	.0778	.4214	3.5750	2.0108	2.0320	26.95
RUN = 182													
-3.79	.2700	.0692	-.2714	.2700	.0692	-.2714	.2700	.0692	-.2714	1.0000	0.0000	0.0000	0.00
-2.17	.4150	.0723	-.1971	.4150	.0723	-.1971	.4150	.0723	-.1971	1.0000	0.0000	0.0000	0.00
.03	.5688	.0882	-.0960	.5688	.0882	-.0960	.5688	.0882	-.0960	1.0000	0.0000	0.0000	0.00
2.03	.7455	.1094	.0089	.7455	.1094	.0089	.7455	.1094	.0089	1.0000	0.0000	0.0000	0.00
4.02	.9146	.1455	.0970	.9146	.1455	.0970	.9146	.1455	.0970	1.0000	0.0000	0.0000	0.00
6.00	1.0802	.1873	.1941	1.0802	.1873	.1941	1.0802	.1873	.1941	1.0000	0.0000	0.0000	0.00
7.98	1.2971	.2475	.3160	1.2971	.2475	.3160	1.2971	.2475	.3160	1.0000	0.0000	0.0000	0.00
9.97	1.4561	.3141	.4018	1.4561	.3141	.4018	1.4561	.3141	.4018	1.0000	0.0000	0.0000	0.00
12.98	1.6658	.4302	.5595	1.6658	.4302	.5595	1.6658	.4302	.5595	1.0000	0.0000	0.0000	0.00
15.99	1.7832	.5808	.6953	1.7832	.5808	.6953	1.7832	.5808	.6953	1.0021	0.0000	0.0000	0.00
17.96	1.9047	.6792	.7978	1.9047	.6792	.7978	1.9047	.6792	.7978	1.0021	0.0000	0.0000	0.00
19.98	2.0136	.7940	.8952	2.0186	.7940	.8952	2.0186	.7940	.8952	1.0022	0.0000	0.0000	0.00
21.95	2.0988	.8982	1.0070	2.0988	.8982	1.0070	2.0988	.8982	1.0070	1.0015	0.0000	0.0000	0.00
23.98	2.1834	1.0251	1.0981	2.1834	1.0251	1.0981	2.1834	1.0251	1.0981	1.0008	0.0000	0.0000	0.00
RUN = 183													
-3.78	.3015	.0729	-.2606	.3015	.0729	-.2606	.3015	.0729	-.2606	1.0018	0.0000	0.0000	0.00
-1.98	.4436	.0786	-.1791	.4436	.0786	-.1791	.4436	.0786	-.1791	1.0007	0.0000	0.0000	0.00
.02	.6099	.0901	-.0843	.6099	.0901	-.0843	.6099	.0901	-.0843	1.0006	0.0000	0.0000	0.00
2.04	.7358	.1120	-.0100	.7358	.1120	-.0100	.7358	.1120	-.0100	1.0007	0.0000	0.0000	0.00
4.03	.9368	.1450	.0936	.9368	.1450	.0936	.9368	.1450	.0936	1.0000	0.0000	0.0000	0.00
6.01	1.1088	.1877	.1979	1.1088	.1877	.1979	1.1088	.1877	.1979	1.0000	0.0000	0.0000	0.00
8.03	1.3038	.2437	.3060	1.3038	.2437	.3060	1.3038	.2437	.3060	1.0000	0.0000	0.0000	0.00
10.04	1.4601	.3090	.3997	1.4601	.3090	.3997	1.4601	.3090	.3997	1.0000	0.0000	0.0000	0.00
12.01	1.6223	.3873	.5100	1.6223	.3873	.5100	1.6223	.3873	.5100	1.0000	0.0000	0.0000	0.00
14.03	1.7324	.4759	.5984	1.7324	.4759	.5984	1.7324	.4759	.5984	1.0000	0.0000	0.0000	0.00
15.96	1.8386	.5593	.7086	1.8386	.5593	.7086	1.8386	.5593	.7086	1.0019	0.0000	0.0000	0.00
17.98	1.9405	.6539	.8002	1.9405	.6539	.8002	1.9405	.6539	.8002	1.0029	0.0000	0.0000	0.00
19.96	2.0579	.7603	.9129	2.0579	.7603	.9129	2.0579	.7603	.9129	1.0019	0.0000	0.0000	0.00
21.99	2.1520	.8765	1.0176	2.1520	.8765	1.0176	2.1520	.8765	1.0176	1.0011	0.0000	0.0000	0.00

TABLE 5.- CONTINUED.

VEO-WING 1/10-SCALE RESEARCH MODEL, VSTOL TEST NO. 204

ALPHA	CL	CD	CPM	CLE2	CDE2	CME2	CLCT	CDCT	CMCT	NPR	CT	CTRF	THETAJ
RUN = 184													
-3.76	.3156	.0728	-.2671	.3156	.0728	-.2671	.3156	.0728	-.2671	1.0002	0.0000	0.0000	0.00
-1.95	.4332	.0816	-.1995	.4332	.0816	-.1995	.4332	.0816	-.1995	1.0000	0.0000	0.0000	0.00
.05	.5789	.0936	-.1128	.5789	.0936	-.1128	.5789	.0936	-.1128	1.0000	0.0000	0.0000	0.00
1.99	.7406	.1123	-.0118	.7406	.1123	-.0118	.7406	.1123	-.0118	1.0000	0.0000	0.0000	0.00
4.04	.9404	.1462	.0905	.9404	.1462	.0905	.9404	.1462	.0905	1.0000	0.0000	0.0000	0.00
6.02	1.1216	.1886	.1932	1.1216	.1886	.1932	1.1216	.1886	.1932	1.0000	0.0000	0.0000	0.00
8.01	1.2861	.2440	.2898	1.2861	.2440	.2898	1.2861	.2440	.2898	1.0000	0.0000	0.0000	0.00
10.04	1.4486	.3091	.3875	1.4486	.3091	.3875	1.4486	.3091	.3875	1.0000	0.0000	0.0000	0.00
12.05	1.6353	.3897	.5061	1.6353	.3897	.5061	1.6353	.3897	.5061	1.0000	0.0000	0.0000	0.00
14.02	1.7423	.4724	.5996	1.7423	.4724	.5996	1.7423	.4724	.5996	1.0000	0.0000	0.0000	0.00
15.96	1.8250	.5509	.6941	1.8250	.5509	.6941	1.8250	.5509	.6941	1.0000	0.0000	0.0000	0.00
17.92	1.9285	.6438	.7855	1.9285	.6438	.7855	1.9285	.6438	.7855	1.0005	0.0000	0.0000	0.00
19.97	2.0736	.7620	.9158	2.0736	.7620	.9158	2.0736	.7620	.9158	1.0000	0.0000	0.0000	0.00
21.99	2.1534	.8720	1.0076	2.1534	.8720	1.0076	2.1534	.8720	1.0076	1.0000	0.0000	0.0000	0.00
24.02	2.2323	.9953	1.0992	2.2323	.9953	1.0992	2.2323	.9953	1.0992	1.0000	0.0000	0.0000	0.00
RUN = 185													
-1.90	.4321	.0667	-.1818	.4321	.0667	-.1818	.4321	.0667	-.1818	1.0000	0.0000	0.0000	0.00
2.00	.7474	.0998	.0042	.7474	.0998	.0042	.7474	.0998	.0042	1.0000	0.0000	0.0000	0.00
6.01	1.1345	.1735	.2176	1.1345	.1735	.2176	1.1345	.1735	.2176	1.0000	0.0000	0.0000	0.00
10.03	1.4540	.3008	.3909	1.4540	.3008	.3909	1.4540	.3008	.3909	1.0000	0.0000	0.0000	0.00
13.99	1.7451	.4569	.6104	1.7451	.4569	.6104	1.7451	.4569	.6104	1.0000	0.0000	0.0000	0.00
16.01	1.8374	.5467	.7048	1.8374	.5467	.7048	1.8374	.5467	.7048	1.0000	0.0000	0.0000	0.00
17.99	1.9794	.6457	.8215	1.9794	.6457	.8215	1.9794	.6457	.8215	1.0000	0.0000	0.0000	0.00
20.01	2.0691	.7526	.9178	2.0691	.7526	.9178	2.0691	.7526	.9178	1.0000	0.0000	0.0000	0.00
20.00	2.0645	.7528	.9142	2.0645	.7528	.9142	2.0645	.7528	.9142	1.0000	0.0000	0.0000	0.00
22.05	2.1506	.8699	1.0169	2.1506	.8699	1.0169	2.1506	.8699	1.0169	1.0000	0.0000	0.0000	0.00
24.02	2.2329	.9937	1.1067	2.2329	.9937	1.1067	2.2329	.9937	1.1067	1.0000	0.0000	0.0000	0.00
12.04	1.6286	.3974	.5039	1.6286	.3974	.5039	1.6286	.3974	.5039	1.0000	0.0000	0.0000	0.00
8.00	1.2907	.2498	.2913	1.2907	.2498	.2913	1.2907	.2498	.2913	1.0000	0.0000	0.0000	0.00
4.02	.9567	.1510	.0968	.9567	.1510	.0968	.9567	.1510	.0968	1.0000	0.0000	0.0000	0.00

TABLE 5.- CONTINUED.

VEO-WING 1/10-SCALE RESEARCH MODEL, VSTOL TEST NO. 204

ALPHA	CL	CD	CPM	CLE2	CDE2	CME2	CLCT	CDCT	CMCT	NPR	CT	CTRF	THETAJ
RUN = 187													
-3.71	.6406	-.4212	-.4199	.4986	.0711	-.2814	.6375	-.4105	-.4169	1.4383	.5112	.5124	19.80
-1.97	.7520	-.4020	-.3694	.5957	.0840	-.2314	.7492	-.3932	-.3669	1.4377	.5092	.5105	19.80
-.02	.9344	-.3790	-.2723	.7611	.1026	-.1340	.9308	-.3690	-.2695	1.4390	.5106	.5118	19.80
2.00	1.0957	-.3480	-.1842	.9048	.1291	-.0453	1.0909	-.3361	-.1807	1.4411	.5128	.5139	19.81
6.03	1.4975	-.2527	.0330	1.2741	.2087	.1715	1.4925	-.2423	.0361	1.4398	.5115	.5127	19.80
8.00	1.6794	-.1862	.1266	1.4402	.2674	.2652	1.6739	-.1758	.1297	1.4400	.5117	.5128	19.80
10.00	1.8825	-.1038	.2404	1.6279	.3409	.3789	1.8769	-.0940	.2435	1.4396	.5112	.5124	19.80
12.04	2.0397	-.0052	.3359	1.7695	.4299	.4743	2.0339	.0041	.3388	1.4393	.5109	.5121	19.80
14.00	2.2049	.1079	.4303	1.9203	.5331	.5686	2.1991	.1166	.4332	1.4388	.5104	.5117	19.80
16.01	2.3681	.2251	.5305	2.0686	.6402	.6688	2.3618	.2338	.5334	1.4391	.5108	.5120	19.80
19.99	2.6314	.4679	.7344	2.3026	.8627	.8733	2.6233	.4776	.7379	1.4405	.5127	.5138	19.80
23.96	2.7863	.7250	.9430	2.4293	1.0977	1.0825	2.7759	.7359	.9470	1.4416	.5150	.5161	19.81
3.99	1.3018	-.3005	-.0766	1.0942	.1703	.0624	1.2964	-.2882	-.0730	1.4408	.5134	.5145	19.81
RUN = 188													
-3.67	.8207	-.7332	-.5312	.5042	.1221	-.3061	.8132	-.7130	-.5747	1.8572	.9219	.9120	23.97
-1.97	.9640	-.7116	-.5059	.6223	.1335	-.2308	.9560	-.6919	-.4995	1.8583	.9214	.9116	23.98
-.01	1.1541	-.6844	-.4125	.7833	.1498	-.1371	1.1450	-.6638	-.4057	1.8567	.9227	.9129	23.97
1.99	1.3351	-.6478	-.3198	.9347	.1745	-.0438	1.3245	-.6260	-.3125	1.8567	.9246	.9147	23.97
4.01	1.5487	-.6009	-.2060	1.1181	.2097	.0710	1.5358	-.5766	-.1977	1.8566	.9278	.9178	23.97
6.01	1.7282	-.5421	-.1136	1.2686	.2544	.1639	1.7136	-.5168	-.1047	1.8581	.9296	.9196	23.98
8.00	1.9641	-.4568	.0001	1.4790	.3203	.2765	1.9505	-.4350	.0079	1.8571	.9260	.9161	23.97
10.03	2.1911	-.3634	.1245	1.6784	.3964	.4011	2.1764	-.3417	.1325	1.8585	.9265	.9166	23.98
12.04	2.3522	-.2510	.2199	1.8147	.4883	.4957	2.3383	-.2319	.2271	1.8576	.9239	.9141	23.98
13.98	2.5307	-.1233	.3120	1.9688	.5971	.5877	2.5164	-.1050	.3191	1.8571	.9235	.9136	23.97
15.97	2.7088	.0097	.4103	2.1224	.7099	.6858	2.6941	.0273	.4172	1.8568	.9233	.9134	23.97
23.99	3.1160	.5517	.7957	2.4378	1.1633	1.0712	3.0990	.5670	.8026	1.8566	.9231	.9132	23.97
20.00	2.9843	.2854	.5954	2.3497	.9432	.8711	2.9679	.3024	.6025	1.8571	.9238	.9140	23.97
RUN = 189													
.02	1.4700	-1.2407	-.6362	.7729	.1546	-.1389	1.4443	-1.1893	-.6179	2.5538	1.5574	1.5598	26.53
2.00	1.6503	-1.1305	-.4967	.9469	.1697	-.0279	1.6605	-1.1493	-.5034	2.4649	1.4786	1.4783	26.41
.01	1.4706	-1.2107	-.6186	.7911	.1525	-.1341	1.4608	-1.1911	-.6116	2.5154	1.5220	1.5232	26.48
1.98	1.6827	-1.1609	-.5171	.9557	.1793	-.0318	1.6717	-1.1405	-.5097	2.5258	1.5231	1.5247	26.50
4.01	1.8955	-1.1072	-.4188	1.1168	.2146	.0696	1.8790	-1.0791	-.4084	2.5286	1.5326	1.5342	26.50
6.02	2.1042	-1.0319	-.3171	1.2801	.2610	.1709	2.0872	-1.0052	-.3070	2.5272	1.5317	1.5332	26.50
8.01	2.3308	-.9437	-.2145	1.4596	.3236	.2749	2.3102	-.9138	-.2030	2.5249	1.5363	1.5378	26.49
9.99	2.5249	-.8430	-.1139	1.6119	.3919	.3748	2.5044	-.8153	-.1029	2.5195	1.5344	1.5357	26.49
11.98	2.7637	-.7098	.0056	1.8110	.4894	.4928	2.7449	-.6860	.0152	2.5164	1.5303	1.5315	26.48
13.99	2.9333	-.5643	.0941	1.9453	.5936	.5782	2.9196	-.5483	.1008	2.5115	1.5211	1.5222	26.48
16.00	3.1766	-.4089	.2084	2.1417	.7209	.6961	3.1559	-.3863	.2182	2.5253	1.5306	1.5321	26.49
20.00	3.5045	-.0968	.4096	2.3947	.9566	.8966	3.4837	-.0771	.4188	2.5236	1.5287	1.5302	26.49
23.98	3.6338	.1964	.5970	2.4525	1.1712	1.0844	3.6105	.2156	.6066	2.5251	1.5301	1.5316	26.49

TABLE 5.- CONTINUED.

VED-WING 1/10-SCALE RESEARCH MODEL, VSTOL TEST NO. 204

ALPHA	CL	CD	CPM	CLE2	CDE2	CME2	CLCT	CDCT	CMCT	NPR	CT	CTRF	THETAJ
RUN = 190													
.01	1.7037	-1.6981	-.7942	.7846	.1443	-.1454	1.6859	-1.6625	-.7817	3.0856	2.0394	2.0589	26.51
2.01	1.9361	-1.6311	-.6887	.9594	.1663	-.0441	1.9233	-1.6076	-.6802	3.0649	2.0266	2.0456	26.51
4.00	2.1792	-1.5531	-.5817	1.1428	.2060	.0616	2.1675	-1.5332	-.5745	3.0599	2.0228	2.0417	26.51
6.01	2.3953	-1.4663	-.4893	1.2982	.2548	.1538	2.3833	-1.4475	-.4823	3.0640	2.0221	2.0411	26.51
8.02	2.6455	-1.3650	-.3734	1.4894	.3158	.2694	2.6334	-1.3475	-.3667	3.0626	2.0211	2.0401	26.51
9.98	2.8675	-1.2557	-.2705	1.6532	.3859	.3729	2.8537	-1.2371	-.2632	3.0645	2.0229	2.0419	26.51
12.02	3.0845	-1.1174	-.1585	1.8137	.4790	.4844	3.0711	-1.1004	-.1517	3.0628	2.0214	2.0404	26.51
14.03	3.2912	-.9682	-.0569	1.9643	.5835	.5864	3.2763	-.9508	-.0497	3.0627	2.0227	2.0416	26.51
15.99	3.5012	-.8000	.0327	2.1216	.7059	.6762	3.4852	-.7826	.0401	3.0625	2.0234	2.0423	26.51
19.96	3.8876	-.4540	.2328	2.4054	.9542	.8770	3.8690	-.4363	.2409	3.0630	2.0255	2.0445	26.51
23.97	4.0696	-.1108	.4560	2.4969	1.1869	1.0985	4.0540	-.0979	.4624	3.0619	2.0200	2.0389	26.51
RUN = 191													
-3.87	.1192	.1549	-.5107	.1192	.1549	-.5107	.1192	.1549	-.5107	1.0017	0.0000	0.0000	0.00
-2.01	.2357	.1431	-.4131	.2357	.1431	-.4131	.2357	.1431	-.4131	1.0032	0.0000	0.0000	0.00
-.02	.3702	.1356	-.3197	.3702	.1356	-.3197	.3702	.1356	-.3197	1.0040	0.0000	0.0000	0.00
2.01	.5262	.1346	-.2223	.5262	.1346	-.2223	.5262	.1346	-.2223	1.0038	0.0000	0.0000	0.00
6.01	.8266	.1792	-.0584	.8266	.1792	-.0584	.8266	.1792	-.0584	1.0036	0.0000	0.0000	0.00
8.00	.9990	.2180	.0404	.9990	.2180	.0404	.9990	.2180	.0404	1.0028	0.0000	0.0000	0.00
10.01	1.1211	.2618	.1322	1.1211	.2618	.1322	1.1211	.2618	.1322	1.0018	0.0000	0.0000	0.00
12.00	1.2674	.3406	.2105	1.2674	.3406	.2105	1.2674	.3406	.2105	1.0003	0.0000	0.0000	0.00
13.99	1.3854	.4096	.3003	1.3854	.4096	.3003	1.3854	.4096	.3003	1.0000	0.0000	0.0000	0.00
15.95	1.4783	.4868	.4065	1.4783	.4868	.4065	1.4783	.4868	.4065	1.0000	0.0000	0.0000	0.00
17.99	1.5707	.5599	.5104	1.5707	.5599	.5104	1.5707	.5599	.5104	1.0000	0.0000	0.0000	0.00
19.99	1.6417	.6344	.6112	1.6417	.6344	.6112	1.6417	.6344	.6112	1.0000	0.0000	0.0000	0.00
22.00	1.7632	.7223	.7276	1.7632	.7223	.7276	1.7632	.7223	.7276	1.0000	0.0000	0.0000	0.00
23.99	1.8426	.8189	.7993	1.8426	.8189	.7993	1.8426	.8189	.7993	1.0000	0.0000	0.0000	0.00
RUN = 192													
-3.83	.3596	-.0447	-.5569	.2937	.1444	-.4972	.3682	-.0696	-.5648	1.1334	.1767	.2003	23.04
-2.04	.4446	-.0428	-.5026	.3729	.1438	-.4430	.4542	-.0679	-.5106	1.1330	.1763	.1999	23.05
-3.82	.4514	-.3385	-.6742	.3134	.1440	-.5387	.4514	-.3384	-.6741	1.4288	.5001	.5018	19.78
-2.02	.5786	-.3446	-.5922	.4247	.1357	-.4560	.5777	-.3420	-.5914	1.4315	.5028	.5044	19.78
-.02	.7522	-.3367	-.5015	.5821	.1368	-.3657	.7517	-.3353	-.5011	1.4303	.5015	.5032	19.78
1.99	.9240	-.3232	-.4169	.7376	.1437	-.2812	.9236	-.3222	-.4166	1.4298	.5011	.5028	19.78
4.00	1.1074	-.2948	-.3281	.9039	.1668	-.1919	1.1062	-.2922	-.3273	1.4315	.5028	.5044	19.78
5.98	1.2846	-.2582	-.2242	1.0653	.1963	-.0879	1.2833	-.2554	-.2234	1.4318	.5031	.5047	19.78
8.00	1.4417	-.2004	-.1440	1.2064	.2461	-.0077	1.4402	-.1977	-.1431	1.4317	.5031	.5047	19.78
10.03	1.5500	-.1431	-.0587	1.2991	.2947	.0775	1.5485	-.1405	-.0579	1.4316	.5030	.5046	19.78
12.02	1.6860	-.0734	.0490	1.4199	.3557	.1853	1.6842	-.0705	.0499	1.4319	.5033	.5049	19.78
14.02	1.8075	.0128	.1208	1.5264	.4325	.2571	1.8055	.0157	.1217	1.4322	.5036	.5051	19.78
16.02	1.9810	.1099	.2272	1.6856	.5194	.3635	1.9791	.1127	.2281	1.4320	.5034	.5049	19.78
20.03	2.1953	.2918	.4389	1.8715	.6802	.5755	2.1927	.2950	.4400	1.4327	.5041	.5056	19.79
24.00	2.4043	.5073	.6360	2.0543	.8726	.7726	2.4013	.5105	.6372	1.4329	.5044	.5059	19.79

TABLE 5.- CONTINUED.

VEO-WING 1/10-SCALE RESEARCH MODEL, VSTOL TEST NO. 204

ALPHA	CL	CD	CPM	CLE2	CDE2	CME2	CLCT	CDCT	CMCT	NPR	CT	CTRF	THETAJ
RUN = 193													
-1.94	.8131	-.6722	-.7372	.4676	.1805	-.4594	.8020	-.6447	-.7282	1.8623	.9300	.9201	24.00
.02	.9841	-.6539	-.6516	.6119	.1825	-.3754	.9739	-.6309	-.6441	1.8574	.9254	.9155	23.98
2.02	1.1812	-.6288	-.5684	.7801	.1939	-.2922	1.1703	-.6065	-.5608	1.8572	.9252	.9153	23.97
4.03	1.3829	-.5929	-.4720	.9536	.2146	-.1961	1.3716	-.5715	-.4647	1.8564	.9244	.9145	23.97
6.04	1.5696	-.5470	-.3702	1.1116	.2458	-.0939	1.5570	-.5252	-.3625	1.8574	.9255	.9156	23.98
8.04	1.7275	-.4817	-.2768	1.2431	.2932	-.0011	1.7150	-.4618	-.2697	1.8557	.9238	.9139	23.97
10.00	1.8715	-.4152	-.1755	1.3609	.3427	.1002	1.8584	-.3957	-.1684	1.8556	.9237	.9138	23.97
11.99	1.9992	-.3324	-.0815	1.4640	.4056	.1934	1.9867	-.3152	-.0751	1.8532	.9215	.9116	23.95
14.01	2.1645	-.2361	-.0003	1.6020	.4843	.2754	2.1499	-.2175	.0068	1.8557	.9239	.9140	23.97
16.00	2.3254	-.1237	.0996	1.7392	.5760	.3749	2.3110	-.1065	.1064	1.8545	.9227	.9128	23.96
19.98	2.5405	.0758	.3174	1.9073	.7329	.5926	2.5252	.0918	.3241	1.8541	.9224	.9125	23.96
23.98	2.7842	.3259	.5133	2.1064	.9375	.7886	2.7674	.3410	.5201	1.8545	.9228	.9129	23.96
RUN = 194													
2.01	1.5023	-1.1554	-.7784	.7665	.1993	-.2877	1.4831	-1.1202	-.7656	2.5261	1.5400	1.5416	26.50
4.01	1.7383	-1.1032	-.6937	.9568	.2235	-.2037	1.7189	-1.0702	-.6815	2.5238	1.5383	1.5398	26.49
6.02	1.9466	-1.0404	-.5819	1.1212	.2548	-.0932	1.9280	-1.0113	-.5710	2.5207	1.5345	1.5359	26.49
8.03	2.1137	-.9684	-.4864	1.2441	.2963	.0019	2.0947	-.9408	-.4758	2.5195	1.5335	1.5348	26.49
10.03	2.2775	-.8855	-.3736	1.3675	.3440	.1129	2.2606	-.8626	-.3646	2.5139	1.5284	1.5296	26.48
12.03	2.4049	-.7902	-.2894	1.4548	.4040	.1959	2.3893	-.7706	-.2814	2.5100	1.5250	1.5260	26.48
13.98	2.5592	-.6790	-.2143	1.5721	.4789	.2694	2.5458	-.6633	-.2078	2.5052	1.5207	1.5216	26.47
15.97	2.7414	-.5578	-.1047	1.7147	.5650	.3790	2.7275	-.5427	-.0981	2.5050	1.5205	1.5214	26.47
19.98	2.9942	-.3295	.1156	1.8887	.7213	.6007	2.9766	-.3128	.1234	2.5092	1.5243	1.5253	26.48
23.95	3.2532	-.0517	.3187	2.0789	.9191	.8031	3.2357	-.0372	.3259	2.5067	1.5226	1.5236	26.47
3.99	1.9965	-1.5550	-.8546	.9564	.2111	-.2087	1.9810	-1.5286	-.8449	3.0741	2.0304	2.0497	26.51
RUN = 195													
8.00	2.4280	-1.4081	-.6541	1.2627	.2869	-.0060	2.4064	-1.3767	-.6421	3.0697	2.0378	2.0570	26.51
6.01	2.2290	-1.4914	-.7554	1.1235	.2427	-.1074	2.2089	-1.4597	-.7436	3.0737	2.0372	2.0565	26.51
10.01	2.5969	-1.3195	-.5519	1.3736	.3329	.0959	2.5749	-1.2898	-.5403	3.0730	2.0366	2.0559	26.51
12.01	2.7578	-1.2103	-.4611	1.4785	.3969	.1862	2.7358	-1.1827	-.4499	3.0712	2.0350	2.0542	26.51
14.00	2.9481	-1.0835	-.3900	1.6141	.4780	.2571	2.9254	-1.0570	-.3790	3.0707	2.0346	2.0538	26.51
16.04	3.1449	-.9403	-.2791	1.7575	.5715	.3675	3.1225	-.9159	-.2687	3.0688	2.0328	2.0520	26.51
20.00	3.4229	-.6781	-.0540	1.9350	.7334	.5922	3.3996	-.6561	-.0439	3.0676	2.0317	2.0509	26.51
24.02	3.7093	-.3702	.1537	2.1233	.9360	.8011	3.6817	-.3475	.1650	3.0716	2.0354	2.0546	26.51

TABLE 5.- CONTINUED.

VEO-WING 1/10-SCALE RESEARCH MODEL, VSTOL TEST NO. 204

ALPHA	CL	CD	CPM	CLE2	CDE2	CME2	CLCT	CDCT	CMCT	NPR	CT	CTRF	THETAJ
RUN = 196													
-3.87	.1386	.1461	-.4986	.1386	.1461	-.4986	.1386	.1461	-.4986	1.0000	0.0000	0.0000	0.00
-2.01	.2507	.1364	-.4103	.2507	.1364	-.4103	.2507	.1364	-.4103	1.0006	0.0000	0.0000	0.00
-.01	.3982	.1322	-.3158	.3982	.1322	-.3158	.3982	.1322	-.3158	1.0013	0.0000	0.0000	0.00
1.99	.5375	.1316	-.2341	.5375	.1316	-.2341	.5375	.1316	-.2341	1.0017	0.0000	0.0000	0.00
4.01	.7005	.1488	-.1399	.7005	.1488	-.1399	.7005	.1488	-.1399	1.0014	0.0000	0.0000	0.00
6.01	.8648	.1758	-.0446	.8648	.1758	-.0446	.8648	.1758	-.0446	1.0008	0.0000	0.0000	0.00
8.01	1.0283	.2174	.0486	1.0283	.2174	.0486	1.0283	.2174	.0486	1.0000	0.0000	0.0000	0.00
9.99	1.1710	.2697	.1393	1.1710	.2697	.1393	1.1710	.2697	.1393	1.0000	0.0000	0.0000	0.00
11.99	1.2991	.3428	.2285	1.2991	.3428	.2285	1.2991	.3428	.2285	1.0000	0.0000	0.0000	0.00
14.01	1.4212	.4124	.3277	1.4212	.4124	.3277	1.4212	.4124	.3277	1.0000	0.0000	0.0000	0.00
15.98	1.4932	.4916	.4127	1.4932	.4916	.4127	1.4932	.4916	.4127	1.0000	0.0000	0.0000	0.00
17.98	1.5767	.5608	.5154	1.5767	.5608	.5154	1.5767	.5608	.5154	1.0000	0.0000	0.0000	0.00
19.95	1.6578	.6292	.6198	1.6578	.6292	.6198	1.6578	.6292	.6198	1.0000	0.0000	0.0000	0.00
21.99	1.7611	.7207	.7146	1.7611	.7207	.7146	1.7611	.7207	.7146	1.0000	0.0000	0.0000	0.00
24.01	1.8553	.8149	.8135	1.8553	.8149	.8135	1.8553	.8149	.8135	1.0000	0.0000	0.0000	0.00
RUN = 197													
-3.70	.3506	.0992	-.0412	.3506	.0992	-.0412	.3506	.0992	-.0412	1.0000	0.0000	0.0000	0.00
-1.98	.4812	.1104	.0429	.4812	.1104	.0429	.4812	.1104	.0429	1.0000	0.0000	0.0000	0.00
.01	.6411	.1331	.1314	.6411	.1331	.1314	.6411	.1331	.1314	1.0000	0.0000	0.0000	0.00
2.03	.8162	.1661	.2267	.8162	.1661	.2267	.8162	.1661	.2267	1.0000	0.0000	0.0000	0.00
3.99	.9774	.2130	.3138	.9774	.2130	.3138	.9774	.2130	.3138	1.0000	0.0000	0.0000	0.00
6.01	1.1329	.2703	.4114	1.1329	.2703	.4114	1.1329	.2703	.4114	1.0000	0.0000	0.0000	0.00
8.00	1.2978	.3445	.4979	1.2978	.3445	.4979	1.2978	.3445	.4979	1.0000	0.0000	0.0000	0.00
10.01	1.4398	.4207	.5872	1.4398	.4207	.5872	1.4398	.4207	.5872	1.0000	0.0000	0.0000	0.00
12.00	1.5939	.5110	.6927	1.5939	.5110	.6927	1.5939	.5110	.6927	1.0000	0.0000	0.0000	0.00
13.97	1.6680	.5755	.7540	1.6680	.5755	.7540	1.6680	.5755	.7540	1.0000	0.0000	0.0000	0.00
18.00	1.8436	.7358	.9154	1.8436	.7358	.9154	1.8436	.7358	.9154	1.0000	0.0000	0.0000	0.00
19.98	1.8918	.8242	.9854	1.8918	.8242	.9854	1.8918	.8242	.9854	1.0000	0.0000	0.0000	0.00
21.97	1.9324	.9249	1.0273	1.9324	.9249	1.0273	1.9324	.9249	1.0273	1.0000	0.0000	0.0000	0.00
23.96	1.9659	1.0235	1.0580	1.9659	1.0235	1.0580	1.9659	1.0235	1.0580	1.0000	0.0000	0.0000	0.00
16.01	1.7708	.6597	.8262	1.7708	.6597	.8262	1.7708	.6597	.8262	1.0000	0.0000	0.0000	0.00

TABLE 5.- CONTINUED.

VEO-WING 1/10-SCALE RESEARCH MODEL, VSTOL TEST NO. 204

ALPHA	CL	CD	CPM	CLE2	CDE2	CME2	CLCT	CDCT	CMCT	NPR	CT	CTRF	THETAJ
RUN = 198													
-3.64	.6399	-.3866	-.2118	.4976	.1044	-.0737	.6371	-.3771	-.2091	1.4378	.5099	.5112	19.80
-2.00	.7685	-.3684	-.1416	.6125	.1174	-.0038	.7657	-.3599	-.1392	1.4368	.5089	.5103	19.80
.02	.9778	-.3354	-.0475	.8047	.1452	.0905	.9746	-.3264	-.0450	1.4374	.5095	.5108	19.80
1.98	1.1546	-.2915	.0354	.9647	.1837	.1737	1.1507	-.2818	.0382	1.4382	.5104	.5117	19.80
4.03	1.3496	-.2319	.1444	1.1431	.2358	.2825	1.3456	-.2227	.1471	1.4377	.5100	.5113	19.80
6.00	1.5255	-.1630	.2393	1.3030	.2974	.3775	1.5211	-.1539	.2420	1.4377	.5101	.5113	19.80
8.00	1.6960	-.0784	.3378	1.4577	.3736	.4758	1.6915	-.0698	.3404	1.4374	.5097	.5110	19.80
10.01	1.8436	.0126	.4260	1.5898	.4556	.5639	1.8390	.0206	.4285	1.4370	.5092	.5105	19.80
11.95	2.0043	.1114	.5325	1.7363	.5446	.6701	2.0001	.1182	.5347	1.4357	.5080	.5094	19.79
13.99	2.0999	.2012	.6104	1.8162	.6253	.7483	2.0949	.2087	.6129	1.4366	.5090	.5103	19.79
16.00	2.2219	.2823	.6724	1.9224	.6975	.8107	2.2156	.2910	.6753	1.4383	.5108	.5120	19.80
19.99	2.4117	.5023	.8272	2.0839	.8959	.9656	2.4047	.5108	.8301	1.4385	.5110	.5122	19.80
23.96	2.5894	.7615	.9602	2.2336	1.1331	1.0992	2.5802	.7711	.9638	1.4392	.5132	.5145	19.80
RUN = 199													
-3.59	.8569	-.7143	-.3432	.5402	.1399	-.0685	.8498	-.6949	-.3369	1.8498	.9209	.9110	23.94
-1.96	1.0012	-.6910	-.2774	.6604	.1538	-.0028	.9935	-.6719	-.2712	1.8497	.9208	.9109	23.94
.01	1.1982	-.6476	-.1941	.8294	.1831	.0798	1.1906	-.6306	-.1885	1.8477	.9188	.9089	23.92
2.02	1.4362	-.5969	-.0795	1.0367	.2235	.1956	1.4265	-.5769	-.0728	1.8515	.9225	.9126	23.95
4.00	1.5993	-.5320	.0037	1.1697	.2774	.2801	1.5871	-.5090	.0115	1.8549	.9263	.9164	23.96
5.99	1.7602	-.4576	.0903	1.3008	.3391	.3678	1.7456	-.4322	.0992	1.8580	.9296	.9197	23.98
8.01	1.9818	-.3574	.2042	1.4949	.4225	.4815	1.9664	-.3328	.2129	1.8558	.9293	.9194	23.97
10.01	2.1718	-.2538	.3093	1.6577	.5089	.5868	2.1554	-.2294	.3182	1.8562	.9296	.9197	23.97
12.01	2.3176	-.1403	.4109	1.7811	.5988	.6864	2.3041	-.1217	.4178	1.8555	.9232	.9133	23.97
13.98	2.4069	-.0451	.4891	1.8467	.6736	.7640	2.3941	-.0286	.4954	1.8539	.9212	.9113	23.96
23.94	2.9982	.5998	.8571	2.3160	1.2163	1.1344	2.9766	.6193	.8659	1.8537	.9295	.9195	23.96
20.01	2.7644	.3000	.7237	2.1311	.9569	.9988	2.7490	.3159	.7304	1.8510	.9224	.9125	23.94
16.00	2.5189	.0501	.5480	1.9346	.7478	.8225	2.5063	.0653	.5540	1.8515	.9200	.9101	23.94
RUN = 200													
-3.56	1.1082	-1.2752	-.5707	.5061	.1475	-.0789	1.0913	-1.2354	-.5570	2.5289	1.5432	1.5449	26.50
-1.96	1.2626	-1.2410	-.5070	.6215	.1632	-.0156	1.2451	-1.2028	-.4937	2.5284	1.5420	1.5436	26.50
.00	1.5048	-1.1896	-.4120	.8173	.1897	.0786	1.4871	-1.1541	-.3994	2.5257	1.5396	1.5411	26.50
1.99	1.7256	-1.1212	-.3103	.9938	.2279	.1781	1.7096	-1.0918	-.2996	2.5192	1.5334	1.5348	26.49
4.01	1.9375	-1.0371	-.2043	1.1595	.2839	.2834	1.9213	-1.0097	-.1942	2.5170	1.5318	1.5331	26.48
6.02	2.1253	-.9461	-.1107	1.3028	.3449	.3761	2.1094	-.9211	-.1013	2.5134	1.5296	1.5307	26.48
8.04	2.3615	-.8245	.0113	1.4993	.4295	.4952	2.3497	-.8073	.0179	2.5089	1.5208	1.5218	26.47
10.01	2.5809	-.7020	.1296	1.6783	.5184	.6123	2.5708	-.6883	.1351	2.5082	1.5170	1.5180	26.47
12.02	2.7282	-.5944	.2065	1.7751	.6034	.6936	2.7099	-.5715	.2158	2.5224	1.5292	1.5307	26.49
14.00	2.8359	-.4837	.2870	1.8429	.6793	.7736	2.8178	-.4625	.2959	2.5209	1.5279	1.5293	26.49
16.00	2.9625	-.3851	.3561	1.9294	.7429	.8428	2.9434	-.3642	.3651	2.5214	1.5283	1.5297	26.49
20.01	3.2011	-.1123	.5143	2.0901	.9419	1.0017	3.1793	-.0915	.5239	2.5234	1.5301	1.5316	26.49
23.97	3.4856	.2433	.6592	2.3083	1.2155	1.1449	3.4658	.2596	.6674	2.5149	1.5256	1.5268	26.48
19.97	3.2229	-.1004	.5181	2.1127	.9547	1.0054	3.2010	-.0796	.5277	2.5204	1.5302	1.5316	26.49

TABLE 5.- CONTINUED.

VEO-WING 1/10-SCALE RESEARCH MODEL, VSTOL TEST NO. 204

ALPHA	CL	CD	CPM	CLE2	CDE2	CME2	CLCT	CDCT	CMCT	NPR	CT	CTRF	THETAJ
RUN = 201													
-2.02	1.4909	-1.7603	-.6885	.6178	.1556	-.0247	1.4973	-1.7743	-.6934	3.1274	2.0848	2.1055	26.51
-.01	1.7669	-1.6995	-.5958	.8281	.1833	.0674	1.7745	-1.7147	-.6012	3.1252	2.0832	2.1038	26.51
1.99	2.0039	-1.6265	-.5034	.9985	.2245	.1607	2.0107	-1.6392	-.5079	3.1274	2.0857	2.1065	26.51
5.95	2.4472	-1.4299	-.2913	1.3234	.3366	.3687	2.4618	-1.4529	-.2999	3.1276	2.0730	2.0936	26.51
4.02	2.2381	-1.5319	-.3887	1.1699	.2792	.2742	2.2474	-1.5476	-.3945	3.1275	2.0819	2.1026	26.51
8.04	2.6952	-1.3163	-.1835	1.4985	.4216	.4817	2.7013	-1.3252	-.1869	3.1252	2.0894	2.1101	26.51
10.01	2.9016	-1.1881	-.0879	1.6467	.5061	.5768	2.9090	-1.1982	-.0918	3.1261	2.0877	2.1084	26.51
12.01	3.0936	-1.0498	.0204	1.7825	.5971	.6840	3.1034	-1.0621	.0155	3.1227	2.0844	2.1050	26.51
14.01	3.2158	-.9316	.1031	1.8473	.6695	.7671	3.2252	-.9427	.0985	3.1240	2.0856	2.1063	26.51
20.03	3.6561	-.4929	.3393	2.1280	.9551	1.0029	3.6574	-.5037	.3344	3.1223	2.0845	2.1052	26.51
24.04	3.9650	-.1052	.4767	2.3366	1.2347	1.1415	3.9743	-.1128	.4729	3.1215	2.0881	2.1087	26.51
15.99	3.3564	-.8011	.1630	1.9344	.7504	.3264	3.3573	-.8131	.1579	3.1217	2.0839	2.1046	26.51
RUN = 202													
.00	.5812	.1441	.1287	.5812	.1441	.1237	.5312	.1441	.1287	1.0000	0.0000	0.0000	0.00
4.00	.9287	.2063	.3125	.9287	.2063	.3125	.9287	.2063	.3125	1.0000	0.0000	0.0000	0.00
8.02	1.2126	.3039	.4901	1.2126	.3039	.4901	1.2126	.3039	.4901	1.0000	0.0000	0.0000	0.00
12.03	1.4920	.3847	.6117	1.4920	.3847	.6117	1.4920	.3847	.6117	1.0000	0.0000	0.0000	0.00
16.01	1.7831	.5310	.7836	1.7831	.5310	.7836	1.7831	.5310	.7836	1.0000	0.0000	0.0000	0.00
20.06	1.9867	.7236	.9735	1.9867	.7236	.9735	1.9867	.7236	.9735	1.0000	0.0000	0.0000	0.00
-3.73	.2571	.1371	-.0479	.2571	.1371	-.0479	.2571	.1371	-.0479	1.0000	0.0000	0.0000	0.00
-2.02	.3934	.1396	.0321	.3934	.1396	.0321	.3934	.1396	.0321	1.0000	0.0000	0.0000	0.00
-.01	.5923	.1469	.1358	.5923	.1469	.1358	.5923	.1469	.1358	1.0000	0.0000	0.0000	0.00
2.03	.7863	.1748	.2374	.7863	.1748	.2374	.7863	.1748	.2374	1.0000	0.0000	0.0000	0.00
6.03	1.0530	.2560	.3906	1.0530	.2560	.3906	1.0530	.2560	.3906	1.0000	0.0000	0.0000	0.00
10.07	1.3827	.3676	.5850	1.3827	.3676	.5850	1.3327	.3676	.5850	1.0000	0.0000	0.0000	0.00
14.18	1.6751	.4633	.7146	1.6751	.4633	.7146	1.6751	.4633	.7146	1.0000	0.0000	0.0000	0.00
18.04	1.8590	.6247	.8710	1.8590	.6247	.8710	1.8590	.6247	.8710	1.0000	0.0000	0.0000	0.00
22.02	2.0695	.8432	1.0501	2.0695	.8432	1.0501	2.0695	.8432	1.0501	1.0000	0.0000	0.0000	0.00
24.04	2.1841	.9885	1.1392	2.1841	.9885	1.1392	2.1841	.9885	1.1392	1.0000	0.0000	0.0000	0.00

TABLE 5.- CONTINUED.

VEO-WING 1/10-SCALE RESEARCH MODEL, VSTOL TEST NO. 204

ALPHA	CL	CD	CPM	CLE2	CDE2	CME2	CLCT	CDCT	CMCT	NPR	CT	CTRF	THETAJ
RUN = 203													
-.01	.9197	-.3142	-.0466	.7486	.1614	.0898	.9183	-.3106	-.0456	1.4321	.5039	.5054	19.78
8.03	1.6295	-.0994	.3442	1.3935	.3478	.4808	1.6275	-.0957	.3453	1.4337	.5042	.5056	19.79
11.96	1.9143	.0227	.4929	1.6482	.4528	.6295	1.9120	.0264	.4941	1.4346	.5043	.5058	19.79
16.05	2.2558	.1812	.6365	1.9592	.5917	.7733	2.2528	.1853	.6379	1.4353	.5050	.5064	19.79
19.99	2.5239	.4172	.8187	2.1983	.8082	.9561	2.5191	.4229	.8207	1.4358	.5074	.5088	19.79
-3.64	.5914	-.3471	-.1989	.4508	.1385	-.0624	.5903	-.3432	-.1978	1.4333	.5040	.5055	19.79
-1.98	.7175	-.3372	-.1452	.5629	.1438	-.0088	.7163	-.3336	-.1442	1.4331	.5038	.5053	19.79
.06	.9173	-.3134	-.0523	.7458	.1617	.0841	.9161	-.3100	-.0513	1.4329	.5036	.5051	19.79
1.98	1.1082	-.2769	.0417	.9208	.1927	.1783	1.1067	-.2730	.0428	1.4333	.5041	.5056	19.79
5.99	1.4691	-.1669	.2494	1.2492	.2884	.3860	1.4673	-.1632	.2505	1.4332	.5041	.5056	19.79
10.02	1.7574	-.0334	.4264	1.5063	.4050	.5628	1.7555	-.0302	.4274	1.4329	.5038	.5053	19.79
14.02	2.0871	.0805	.5560	1.8053	.5013	.6927	2.0844	.0846	.5573	1.4339	.5049	.5064	19.79
17.99	2.3925	.2912	.7179	2.0817	.6921	.8549	2.3889	.2958	.7194	1.4340	.5059	.5073	19.79
22.02	2.6123	.5455	.9052	2.2718	.9261	1.0431	2.6060	.5524	.9077	1.4366	.5093	.5107	19.79
24.01	2.7254	.6943	.9974	2.3720	1.0628	1.1353	2.7190	.7009	.9999	1.4352	.5092	.5106	19.79
RUN = 204													
.00	1.1398	-.6152	-.1921	.7703	.2166	.0823	1.1318	-.5971	-.1862	1.8524	.9200	.9101	23.95
3.99	1.5311	-.5148	.0054	1.1037	.2912	.2806	1.5208	-.4954	.0121	1.8531	.9222	.9123	23.95
8.03	1.8946	-.3689	.2096	1.4106	.4064	.4853	1.8821	-.3488	.2167	1.8533	.9239	.9140	23.95
11.99	2.2064	-.2190	.3629	1.6702	.5206	.6384	2.1928	-.2003	.3699	1.8525	.9234	.9135	23.95
16.04	2.5841	-.0403	.5027	1.9971	.6596	.7781	2.5693	-.0226	.5096	1.8524	.9233	.9134	23.95
20.08	2.8854	.2329	.6893	2.2492	.8911	.9654	2.8680	.2509	.6969	1.8523	.9253	.9154	23.95
-3.61	.7963	-.6695	-.3406	.4787	.1870	-.0651	.7883	-.6478	-.3336	1.8528	.9234	.9135	23.95
-2.00	.9242	-.6524	-.2862	.5828	.1949	-.0107	.9155	-.6309	-.2792	1.8526	.9235	.9136	23.95
-.00	1.1617	-.6201	-.1841	.7911	.2140	.0912	1.1526	-.5996	-.1774	1.8537	.9226	.9127	23.96
2.04	1.3396	-.5704	-.1024	.9401	.2487	.1725	1.3304	-.5516	-.0960	1.8538	.9212	.9113	23.96
6.07	1.7326	-.4421	.1186	1.2759	.3478	.3938	1.7215	-.4230	.1252	1.8550	.9223	.9124	23.96
10.01	2.0501	-.2876	.2997	1.5399	.4695	.5751	2.0375	-.2688	.3065	1.8554	.9229	.9130	23.97
14.01	2.3879	-.1503	.4166	1.8267	.5688	.6917	2.3745	-.1331	.4232	1.8545	.9220	.9122	23.96
18.06	2.7449	.0917	.5875	2.1352	.7686	.8623	2.7310	.1071	.5938	1.8532	.9210	.9111	23.95
22.08	3.0008	.3835	.7808	2.3423	1.0185	1.0567	2.9832	.4005	.7882	1.8540	.9247	.9148	23.96
24.01	3.0963	.5346	.8597	2.4175	1.1465	1.1353	3.0788	.5503	.8668	1.8533	.9238	.9139	23.95

TABLE 5.- CONTINUED.

VEO-WING 1/10-SCALE RESEARCH MODEL, VSTOL TEST NO. 204

ALPHA	CL	CD	CPM	CLE2	CDE2	CME2	CLCT	CDCT	CMCT	NPR	CT	CTRF	THETAJ
RUN = 205													
.01	1.4361	-1.1280	-.4017	.7607	.2278	.0799	1.4299	-1.1156	-.3973	2.5054	1.5138	1.5147	26.47
4.04	1.8740	-1.0061	-.2009	1.1013	.3054	.2830	1.8632	-.9877	-.1942	2.5049	1.5213	1.5222	26.47
8.07	2.2641	-.8285	.0057	1.4052	.4194	.4872	2.2562	-.8169	.0101	2.5045	1.5140	1.5149	26.47
12.05	2.6120	-.6650	.1532	1.6567	.5343	.6411	2.5921	-.6400	.1633	2.5203	1.5319	1.5333	26.49
16.07	3.0235	-.4598	.2938	1.9869	.6691	.7815	3.0023	-.4367	.3038	2.5186	1.5313	1.5326	26.49
20.04	3.3528	-.1606	.4769	2.2407	.8936	.9644	3.3302	-.1392	.4868	2.5184	1.5311	1.5324	26.49
-3.56	1.0371	-1.2148	-.5700	.4387	.1995	-.0813	1.0237	-1.1832	-.5590	2.5219	1.5342	1.5357	26.49
-1.92	1.2457	-1.1918	-.4820	.6073	.2044	.0065	1.2316	-1.1610	-.4712	2.5212	1.5339	1.5353	26.49
.01	1.4297	-1.1488	-.4200	.7448	.2247	.0684	1.4148	-1.1189	-.4093	2.5213	1.5334	1.5348	26.49
2.04	1.6537	-1.0859	-.3194	.9224	.2597	.1678	1.6393	-1.0594	-.3098	2.5184	1.5302	1.5315	26.49
6.06	2.0786	-.9341	-.1048	1.2526	.3600	.3336	2.0603	-.9055	-.0940	2.5190	1.5339	1.5352	26.49
10.05	2.4598	-.7485	.0906	1.5485	.4815	.5777	2.4422	-.7248	.1000	2.5198	1.5295	1.5309	26.49
14.06	2.8320	-.5775	.2191	1.8407	.5814	.7043	2.8165	-.5595	.2267	2.5183	1.5238	1.5251	26.49
18.00	3.1700	-.3284	.3650	2.0954	.7655	.8530	3.1474	-.3055	.3753	2.5192	1.5322	1.5335	26.49
22.07	3.5105	.0242	.5925	2.3630	1.0373	1.0795	3.4884	.0437	.6019	2.5189	1.5294	1.5307	26.49
24.03	3.6122	.1932	.6609	2.4301	1.1669	1.1482	3.5889	.2124	.6706	2.5194	1.5302	1.5315	26.49
RUN = 206													
-3.54	1.2339	-1.6853	-.7402	.4384	.1921	-.0977	1.2260	-1.6667	-.7338	3.0615	2.0201	2.0390	26.51
-1.98	1.4188	-1.6445	-.6670	.5777	.1987	-.0286	1.4157	-1.6376	-.6646	3.0484	2.0075	2.0260	26.51
-.00	1.6850	-1.6086	-.5806	.7741	.2181	.0626	1.6750	-1.5885	-.5735	3.0638	2.0222	2.0412	26.51
2.01	1.9506	-1.5382	-.4630	.9784	.2515	.1788	1.9420	-1.5223	-.4573	3.0586	2.0179	2.0367	26.51
4.01	2.1486	-1.4606	-.3720	1.1131	.2961	.2706	2.1383	-1.4430	-.3655	3.0639	2.0202	2.0392	26.51
5.99	2.3670	-1.3723	-.2707	1.2690	.3517	.3734	2.3534	-1.3509	-.2627	3.0579	2.0251	2.0440	26.51
8.06	2.5631	-1.2591	-.1684	1.4072	.4186	.4735	2.5526	-1.2438	-.1626	3.0655	2.0184	2.0374	26.51
10.40	2.7730	-1.1441	-.0697	1.5492	.4857	.5725	2.7614	-1.1287	-.0637	3.0649	2.0191	2.0381	26.51
12.03	2.9351	-1.0661	-.0084	1.6627	.5317	.6352	2.9202	-1.0475	-.0009	3.0634	2.0236	2.0425	26.51
14.01	3.1514	-.9624	.0520	1.8295	.5845	.6931	3.1410	-.9502	.0570	3.0628	2.0159	2.0348	26.51
16.03	3.3866	-.8231	.1396	2.0117	.6754	.7804	3.3765	-.8121	.1443	3.0616	2.0148	2.0336	26.51
18.25	3.5965	-.6483	.2242	2.1568	.8037	.8685	3.5783	-.6300	.2324	3.0715	2.0256	2.0448	26.51
19.99	3.7467	-.5021	.3096	2.2601	.9087	.9554	3.7246	-.4812	.3192	3.0767	2.0301	2.0494	26.51
22.03	3.8900	-.3235	.4028	2.3514	1.0357	1.0497	3.8646	-.3010	.4135	3.0781	2.0335	2.0529	26.51
24.09	4.0322	-.1331	.4950	2.4382	1.1765	1.1450	3.9982	-.1051	.5088	3.0748	2.0436	2.0629	26.51

TABLE 5.- CONTINUED.

VEO-WING 1/10-SCALE RESEARCH MODEL, VSTOL TEST NO. 204

ALPHA	CL	CD	CPM	CLE2	CDE2	CME2	CLCT	CDCT	CMCT	NPR	CT	CTRF	THETAJ
RUN = 207													
-3.78	.1891	.1099	-.2711	.1891	.1099	-.2711	.1891	.1099	-.2711	1.0000	0.0000	0.0000	0.00
-1.99	.3397	.1014	-.1822	.3397	.1014	-.1822	.3397	.1014	-.1822	1.0000	0.0000	0.0000	0.00
.04	.5190	.1002	-.0967	.5190	.1002	-.0967	.5190	.1002	-.0967	1.0000	0.0000	0.0000	0.00
2.02	.7394	.1074	.0083	.7394	.1074	.0083	.7394	.1074	.0083	1.0000	0.0000	0.0000	0.00
4.04	.8951	.1313	.0774	.8951	.1313	.0774	.8951	.1313	.0774	1.0000	0.0000	0.0000	0.00
6.00	1.0780	.1613	.1858	1.0780	.1613	.1858	1.0780	.1613	.1858	1.0000	0.0000	0.0000	0.00
10.05	1.3834	.2522	.3818	1.3834	.2522	.3818	1.3834	.2522	.3818	1.0000	0.0000	0.0000	0.00
12.01	1.5504	.3131	.4913	1.5504	.3131	.4913	1.5504	.3131	.4913	1.0000	0.0000	0.0000	0.00
14.07	1.6892	.3787	.5940	1.6892	.3787	.5940	1.6892	.3787	.5940	1.0000	0.0000	0.0000	0.00
16.00	1.7520	.4377	.6777	1.7520	.4377	.6777	1.7520	.4377	.6777	1.0000	0.0000	0.0000	0.00
18.04	1.8834	.5261	.7886	1.8834	.5261	.7886	1.8834	.5261	.7886	1.0000	0.0000	0.0000	0.00
18.04	1.8655	.5199	.7820	1.8655	.5199	.7820	1.8655	.5199	.7820	1.0000	0.0000	0.0000	0.00
20.04	1.9854	.6156	.8816	1.9854	.6156	.8816	1.9854	.6156	.8816	1.0000	0.0000	0.0000	0.00
22.03	2.0925	.7196	.9774	2.0925	.7196	.9774	2.0925	.7196	.9774	1.0000	0.0000	0.0000	0.00
23.99	2.1932	.8448	1.0724	2.1932	.8448	1.0724	2.1932	.8448	1.0724	1.0000	0.0000	0.0000	0.00
RUN = 208													
.02	.8562	-.3728	-.2764	.6851	.1020	-.1401	.8551	-.3697	-.2755	1.4364	.5033	.5046	19.79
-3.74	.4795	-.3861	-.4429	.3399	.0989	-.3065	.4785	-.3828	-.4420	1.4379	.5035	.5047	19.80
-2.01	.6766	-.3899	-.3494	.5228	.0894	-.2134	.6760	-.3879	-.3489	1.4369	.5021	.5034	19.80
.05	.8610	-.3756	-.2730	.6899	.0986	-.1368	.8601	-.3729	-.2722	1.4374	.5029	.5041	19.80
2.00	1.0487	-.3588	-.1918	.8609	.1108	-.0551	1.0470	-.3546	-.1906	1.4387	.5046	.5058	19.80
3.99	1.2521	-.3257	-.0882	1.0483	.1367	.0483	1.2505	-.3220	-.0871	1.4377	.5041	.5054	19.80
6.06	1.4480	-.2836	.0198	1.2277	.1710	.1553	1.4463	-.2801	.0209	1.4371	.5038	.5051	19.80
7.99	1.6054	-.2341	.1170	1.3697	.2132	.2536	1.6034	-.2303	.1182	1.4373	.5043	.5056	19.80
9.97	1.7629	-.1755	.2178	1.5125	.2625	.3541	1.7613	-.1727	.2186	1.4364	.5032	.5045	19.79
11.76	1.9317	-.1065	.3165	1.6678	.3232	.4527	1.9302	-.1040	.3173	1.4359	.5029	.5043	19.79
12.02	1.9572	-.0948	.3314	1.6918	.3332	.4674	1.9560	-.0928	.3320	1.4351	.5022	.5036	19.79
14.05	2.1281	-.0134	.4265	1.8470	.4058	.5628	2.1262	-.0106	.4274	1.4360	.5033	.5046	19.79
16.00	2.3213	.0925	.5130	2.0265	.5014	.6492	2.3197	.0947	.5138	1.4356	.5027	.5041	19.79
17.97	2.4500	.2071	.6046	2.1410	.6059	.7409	2.4480	.2096	.6055	1.4359	.5032	.5045	19.79
19.96	2.5789	.3299	.7140	2.2562	.7179	.8503	2.5768	.3325	.7149	1.4365	.5034	.5047	19.79
21.98	2.6842	.4567	.8125	2.3476	.8334	.9490	2.6816	.4596	.8136	1.4368	.5039	.5052	19.80
23.99	2.7622	.5815	.9057	2.4128	.9461	1.0421	2.7597	.5842	.9067	1.4363	.5036	.5050	19.79

TABLE 5.- CONTINUED.

VEO-WING 1/10-SCALE RESEARCH MODEL, VSTOL TEST NO. 204

ALPHA	CL	CD	CPM	CLE2	CDE2	CME2	CLCT	CDCT	CMCT	NPR	CT	CTRF	THETAJ
RUN = 209													
-3.69	.6842	-.7189	-.5844	.3647	.1423	-.3068	.6744	-.6926	-.5759	1.8706	.9284	.9186	24.04
-1.98	.8547	-.7078	-.5080	.5109	.1411	-.2313	.8452	-.6842	-.5003	1.8676	.9257	.9159	24.03
-.02	1.0688	-.6936	-.4228	.6958	.1445	-.1458	1.0578	-.6690	-.4147	1.8655	.9272	.9173	24.02
2.08	1.3261	-.6648	-.3131	.9231	.1581	-.0364	1.3147	-.6416	-.3053	1.8648	.9262	.9163	24.01
4.04	1.5032	-.6250	-.2278	1.0710	.1858	.0497	1.4899	-.5999	-.2192	1.8657	.9287	.9188	24.02
6.03	1.7172	-.5748	-.1175	1.2559	.2224	.1607	1.7019	-.5483	-.1083	1.8669	.9309	.9210	24.02
7.99	1.8831	-.5088	-.0223	1.3987	.2664	.2538	1.8706	-.4887	-.0151	1.8660	.9240	.9141	24.02
9.99	2.0643	-.4385	.0879	1.5537	.3181	.3636	2.0518	-.4200	.0946	1.8667	.9226	.9128	24.02
12.02	2.2454	-.3550	.1977	1.7092	.3818	.4729	2.2331	-.3382	.2040	1.8659	.9211	.9113	24.02
13.98	2.4388	-.2617	.2925	1.8740	.4612	.5695	2.4222	-.2405	.3006	1.8655	.9272	.9174	24.02
15.95	2.6514	-.1413	.3729	2.0612	.5630	.6504	2.6331	-.1195	.3815	1.8649	.9288	.9189	24.01
17.95	2.7997	-.0114	.4587	2.1860	.6709	.7358	2.7814	.0089	.4669	1.8658	.9276	.9177	24.02
19.99	2.9538	.1390	.5805	2.3192	.7961	.8563	2.9377	.1556	.5875	1.8649	.9234	.9135	24.01
23.97	3.1979	.4327	.7945	2.5184	1.0449	1.0707	3.1799	.4489	.3018	1.8638	.9244	.9146	24.01
RUN = 210													
2.05	1.6022	-1.1737	-.5562	.8685	.1746	-.0673	1.5863	-1.1445	-.5456	2.5365	1.5332	1.5350	26.31
6.03	2.0478	-1.0612	-.3471	1.2218	.2338	.1419	2.0293	-1.0322	-.3361	2.5304	1.5343	1.5359	26.50
13.97	2.8779	-.6911	.0841	1.8849	.4727	.5713	2.8597	-.6697	.0931	2.5354	1.5280	1.5299	26.51
19.98	3.4133	-.2463	.3630	2.3061	.8052	.8492	3.3950	-.2289	.3711	2.5329	1.5252	1.5270	26.50
23.99	3.6663	.0757	.5729	2.4855	1.0495	1.0602	3.6440	.0940	.5821	2.5305	1.5288	1.5305	26.50
16.01	3.1037	-.5426	.1645	2.0726	.5821	.6504	3.0374	-.5247	.1722	2.5317	1.5242	1.5259	26.50
11.97	2.6362	-.7978	-.0232	1.6893	.3938	.4564	2.6236	-.7819	-.0218	2.5317	1.5203	1.5220	26.50
4.03	1.8323	-1.1157	-.4489	1.0565	.1996	.0373	1.8194	-1.0938	-.4408	2.5319	1.5253	1.5270	26.50
RUN = 211													
-.03	1.6152	-1.6953	-.8120	.6957	.1507	-.1620	1.5961	-1.6570	-.7985	3.1041	2.0424	2.0623	26.51
2.01	1.8484	-1.6505	-.7306	.8618	.1648	-.0794	1.8261	-1.6095	-.7159	3.1026	2.0462	2.0661	26.51
3.97	2.1128	-1.5856	-.6240	1.0671	.1907	.0256	2.0916	-1.5496	-.6109	3.1018	2.0413	2.0612	26.51
6.00	2.3669	-1.5155	-.5037	1.2573	.2258	.1471	2.3426	-1.4773	-.4894	3.1052	2.0448	2.0647	26.51
8.01	2.5673	-1.4195	-.4082	1.4035	.2724	.2390	2.5480	-1.3915	-.3974	3.1023	2.0338	2.0535	26.51
10.10	2.7910	-1.3353	-.3014	1.5575	.3250	.3504	2.7618	-1.2960	-.2860	3.1007	2.0485	2.0684	26.51
11.98	2.9900	-1.2276	-.1962	1.7079	.3850	.4531	2.9647	-1.1957	-.1834	3.1016	2.0403	2.0601	26.51
14.05	3.2030	-1.1017	-.1004	1.8633	.4637	.5490	3.1764	-1.0706	-.0874	3.1020	2.0406	2.0605	26.51
15.96	3.4670	-.9498	-.0003	2.0772	.5683	.6484	3.4408	-.9212	.0119	3.1000	2.0384	2.0582	26.51
20.01	3.8307	-.6010	.1944	2.3384	.8144	.8426	3.8036	-.5753	.2062	3.0990	2.0370	2.0567	26.51
24.00	4.0869	-.2478	.3932	2.4956	1.0636	1.0431	4.0541	-.2207	.4066	3.1022	2.0421	2.0620	26.51

TABLE 5.- CONTINUED.

VEO-WING 1/10-SCALE RESEARCH MODEL, VSTOL TEST NO. 204

ALPHA	CL	CD	CPM	CLE2	CDE2	CME2	CLCT	CDCT	CMCT	NPR	CT	CTRF	THETAJ
RUN = 212													
-3.79	.1796	.0949	-.2659	.1796	.0949	-.2659	.1796	.0949	-.2659	1.0000	0.0000	0.0000	0.00
-2.02	.3260	.0923	-.1850	.3260	.0923	-.1850	.3260	.0923	-.1850	1.0000	0.0000	0.0000	0.00
.04	.5124	.0909	-.0962	.5124	.0909	-.0962	.5124	.0909	-.0962	1.0000	0.0000	0.0000	0.00
2.06	.7194	.1015	-.0009	.7194	.1015	-.0009	.7194	.1015	-.0009	1.0000	0.0000	0.0000	0.00
4.04	.9056	.1261	.0853	.9056	.1261	.0853	.9056	.1261	.0853	1.0000	0.0000	0.0000	0.00
5.99	1.0650	.1577	.1901	1.0650	.1577	.1901	1.0650	.1577	.1901	1.0000	0.0000	0.0000	0.00
7.97	1.2365	.2003	.2987	1.2365	.2003	.2987	1.2365	.2003	.2987	1.0000	0.0000	0.0000	0.00
9.97	1.3726	.2520	.3857	1.3726	.2520	.3857	1.3726	.2520	.3857	1.0000	0.0000	0.0000	0.00
11.99	1.5354	.3092	.4931	1.5354	.3092	.4931	1.5354	.3092	.4931	1.0000	0.0000	0.0000	0.00
13.98	1.6829	.3722	.6065	1.6829	.3722	.6065	1.6829	.3722	.6065	1.0000	0.0000	0.0000	0.00
16.03	1.7551	.4415	.6904	1.7551	.4415	.6904	1.7551	.4415	.6904	1.0005	0.0000	0.0000	0.00
17.96	1.8472	.5246	.7682	1.8472	.5246	.7682	1.8472	.5246	.7682	1.0009	0.0000	0.0000	0.00
19.98	1.9813	.6244	.8766	1.9813	.6244	.8766	1.9813	.6244	.8766	1.0004	0.0000	0.0000	0.00
21.97	2.0785	.7293	.9658	2.0785	.7293	.9658	2.0785	.7293	.9658	1.0012	0.0000	0.0000	0.00
23.94	2.1840	.8530	1.0683	2.1840	.8530	1.0683	2.1840	.8530	1.0683	1.0000	0.0000	0.0000	0.00
RUN = 213													
-1.99	1.3524	-1.7283	-.8842	.5037	.1322	-.2398	1.3418	-1.7050	-.8761	3.0919	2.0254	2.0449	26.51
.05	1.6001	-1.6841	-.7953	.6885	.1399	-.1527	1.5911	-1.6662	-.7890	3.0823	2.0199	2.0392	26.51
2.05	1.8499	-1.6322	-.7063	.8759	.1578	-.0641	1.8409	-1.6157	-.7004	3.0797	2.0186	2.0378	26.51
4.04	2.1094	-1.5811	-.6079	1.0698	.1806	.0367	2.0959	-1.5582	-.5995	3.0772	2.0264	2.0456	26.51
6.03	2.3362	-1.5041	-.5070	1.2356	.2213	.1379	2.3214	-1.4809	-.4984	3.0795	2.0272	2.0465	26.51
8.01	2.5581	-1.4168	-.3948	1.4016	.2651	.2484	2.5456	-1.3987	-.3879	3.0816	2.0218	2.0411	26.51
10.03	2.7540	-1.3244	-.2984	1.5371	.3181	.3458	2.7391	-1.3043	-.2905	3.0826	2.0248	2.0441	26.51
11.99	2.9764	-1.2170	-.1818	1.7053	.3813	.4617	2.9621	-1.1990	-.1746	3.0833	2.0228	2.0421	26.51
14.03	3.1986	-1.0814	-.0741	1.8771	.4639	.5666	3.1894	-1.0706	-.0696	3.0810	2.0141	2.0333	26.51
16.02	3.4623	-.9277	.0152	2.0872	.5714	.6562	3.4521	-.9166	.0200	3.0819	2.0149	2.0342	26.51
17.99	3.6419	-.7696	.1050	2.2155	.6822	.7463	3.6305	-.7581	.1101	3.0834	2.0160	2.0353	26.51
20.00	3.8024	-.5886	.1986	2.3241	.8139	.8407	3.7888	-.5758	.2045	3.0804	2.0185	2.0377	26.51
24.05	4.0754	-.2294	.4001	2.5001	1.0666	1.0429	4.0593	-.2162	.4067	3.0807	2.0206	2.0399	26.51

TABLE 5.- CONTINUED.

VEO-WING 1/10-SCALE RESEARCH MODEL, VSTOL TEST NO. 204

ALPHA	CL	CD	CPM	CLE2	CDE2	CME2	CLCT	CDCT	CMCT	NPR	CT	CTRF	THETAJ
RUN = 214													
-3.68	1.1037	-1.7303	-.9446	.3925	.1451	-.3331	1.0947	-1.7067	-.9369	1.9576	2.0255	2.0057	24.45
-1.97	1.3106	-1.7291	-.8792	.5324	.1462	-.2596	1.2916	-1.6832	-.8641	1.9687	2.0501	2.0303	24.50
-.02	1.5607	-1.7017	-.7991	.7174	.1505	-.1780	1.5381	-1.6521	-.7824	1.9676	2.0550	2.0352	24.50
2.04	1.8067	-1.6607	-.7119	.8937	.1680	-.0883	1.7784	-1.6041	-.6926	1.9656	2.0639	2.0440	24.49
3.97	2.0401	-1.6088	-.6185	1.0624	.1948	.0075	2.0535	-1.6335	-.6271	1.9660	2.0716	2.0516	24.49
6.01	2.2913	-1.5397	-.5168	1.2469	.2330	.1110	2.3026	-1.5588	-.5236	1.9668	2.0776	2.0575	24.50
7.95	2.4747	-1.4262	-.4154	1.3900	.2800	.2016	2.4527	-1.3915	-.4029	1.9681	2.0415	2.0218	24.50
9.94	2.7274	-1.3424	-.2825	1.5781	.3338	.3376	2.6982	-1.2998	-.2667	1.9661	2.0522	2.0324	24.49
11.97	2.9767	-1.2380	-.1497	1.7667	.3998	.4716	2.9436	-1.1932	-.1327	1.9651	2.0562	2.0363	24.49
13.99	3.1786	-1.1012	-.0632	1.9125	.4922	.5577	3.1447	-1.0585	-.0466	1.9645	2.0551	2.0352	24.49
15.97	3.4196	-.9603	.0216	2.0988	.5882	.6425	3.3841	-.9187	.0383	1.9645	2.0552	2.0353	24.49
19.93	3.7767	-.6165	.2143	2.3527	.8370	.8351	3.7388	-.5777	.2309	1.9643	2.0547	2.0348	24.48
23.96	4.0250	-.2811	.4232	2.5008	1.0701	1.0446	3.9829	-.2437	.4404	1.9645	2.0569	2.0369	24.49
RUN = 215													
2.02	1.8153	-1.5719	-.7170	.8455	.1812	-.0648	1.8240	-1.5876	-.7228	3.5613	1.9823	2.0035	26.93
4.01	2.0622	-1.5090	-.6179	1.0317	.2099	.0346	2.0710	-1.5237	-.6235	3.5612	1.9830	2.0042	26.93
8.06	2.5083	-1.3515	-.4060	1.3599	.2895	.2456	2.5189	-1.3667	-.4121	3.5536	1.9817	2.0029	26.92
9.95	2.7175	-1.2579	-.2928	1.5179	.3412	.3579	2.7309	-1.2757	-.3000	3.5598	1.9780	1.9991	26.93
11.97	2.9269	-1.1531	-.1874	1.6715	.4028	.4634	2.9407	-1.1703	-.1946	3.5601	1.9782	1.9993	26.93
13.98	3.1415	-1.0305	-.0840	1.8327	.4801	.5665	3.1563	-1.0476	-.0914	3.5594	1.9776	1.9987	26.93
16.00	3.3883	-.8776	.0057	2.0287	.5840	.6554	3.4054	-.8960	-.0025	3.5588	1.9751	1.9962	26.93
19.95	3.7468	-.5384	.1965	2.2916	.8244	.8453	3.7670	-.5573	.1875	3.5568	1.9726	1.9937	26.93
24.01	3.9988	-.1899	.3994	2.4395	1.0753	1.0535	4.0090	-.1983	.3951	3.5682	1.9869	2.0080	26.94
RUN = 216													
-3.77	.2835	.0614	-.2757	.2835	.0614	-.2757	.2835	.0614	-.2757	1.0000	0.0000	0.0000	0.00
-1.91	.4365	.0670	-.1872	.4365	.0670	-.1872	.4365	.0670	-.1872	1.0000	0.0000	0.0000	0.00
.04	.5798	.0805	-.0942	.5798	.0805	-.0942	.5798	.0805	-.0942	1.0000	0.0000	0.0000	0.00
1.98	.7410	.0983	.0068	.7410	.0983	.0068	.7410	.0983	.0068	1.0000	0.0000	0.0000	0.00
4.01	.9347	.1282	.1092	.9347	.1282	.1092	.9347	.1282	.1092	1.0000	0.0000	0.0000	0.00
6.02	1.1084	.1696	.2142	1.1084	.1696	.2142	1.1084	.1696	.2142	1.0000	0.0000	0.0000	0.00
8.02	1.2747	.2243	.3050	1.2747	.2243	.3050	1.2747	.2243	.3050	1.0000	0.0000	0.0000	0.00
9.96	1.4433	.2871	.4089	1.4433	.2871	.4089	1.4433	.2871	.4089	1.0000	0.0000	0.0000	0.00
13.99	1.6740	.4448	.5723	1.6740	.4448	.5723	1.6740	.4448	.5723	1.0000	0.0000	0.0000	0.00
15.99	1.7860	.5330	.6669	1.7860	.5330	.6669	1.7860	.5330	.6669	1.0000	0.0000	0.0000	0.00
18.00	1.8886	.6250	.7719	1.8886	.6250	.7719	1.8886	.6250	.7719	1.0000	0.0000	0.0000	0.00
20.06	1.9851	.7271	.8791	1.9851	.7271	.8791	1.9851	.7271	.8791	1.0000	0.0000	0.0000	0.00
22.02	2.0658	.8347	.9830	2.0658	.8347	.9830	2.0658	.8347	.9830	1.0000	0.0000	0.0000	0.00
23.99	2.1065	.9559	1.0497	2.1065	.9559	1.0497	2.1065	.9559	1.0497	1.0000	0.0000	0.0000	0.00
11.96	1.6033	.3799	.4881	1.6033	.3799	.4881	1.6033	.3799	.4881	1.0000	0.0000	0.0000	0.00

TABLE 5.- CONTINUED.

VEO-WING 1/10-SCALE RESEARCH MODEL, VSTOL TEST NO. 204

ALPHA	CL	CD	CPM	CLE2	CDE2	CME2	CLCT	CDCT	CMCT	NPR	CT	CTRF	THETAJ
RUN = 217													
-3.65	.6007	-.4211	-.4559	.4603	.0640	-.3195	.5997	-.4175	-.4549	1.4368	.5037	.5050	19.80
-2.02	.7432	-.4109	-.3742	.5891	.0700	-.2378	.7421	-.4074	-.3732	1.4366	.5037	.5050	19.79
-.02	.9170	-.3881	-.2768	.7459	.0879	-.1401	.9155	-.3838	-.2755	1.4373	.5045	.5058	19.80
2.02	1.0922	-.3586	-.1840	.9044	.1106	-.0474	1.0907	-.3548	-.1829	1.4364	.5041	.5054	19.79
4.01	1.3059	-.3171	-.0633	1.1038	.1411	.0720	1.3061	-.3177	-.0634	1.4326	.4993	.5009	19.79
6.03	1.4837	-.2622	.0317	1.2640	.1918	.1679	1.4824	-.2595	.0325	1.4363	.5030	.5043	19.79
7.96	1.6795	-.1999	.1426	1.4446	.2464	.2789	1.6780	-.1972	.1435	1.4371	.5030	.5043	19.80
10.09	1.8474	-.1176	.2329	1.5959	.3200	.3693	1.8457	-.1146	.2339	1.4381	.5034	.5047	19.80
14.00	2.1299	.0732	.4188	1.8489	.4930	.5552	2.1278	.0764	.4198	1.4368	.5038	.5051	19.80
24.01	2.6624	.6708	.8868	2.5442	.7765	.9356	2.6517	.6805	.8912	1.0962	.1100	.1586	24.21
15.97	2.2429	.1800	.5036	1.9502	.5865	.6389	2.2433	.1796	.5034	1.4342	.4995	.5009	19.79
20.02	2.4906	.4122	.6984	2.1714	.7954	.8330	2.4925	.4100	.6975	1.4290	.4970	.4987	19.78
11.99	2.0260	-.0202	.3269	1.7620	.4060	.4623	2.0261	-.0203	.3268	1.4333	.4999	.5014	19.79
RUN = 218													
-3.61	.8221	-.7558	-.5852	.5043	.0994	-.3098	.8145	-.7352	-.5786	1.8616	.9222	.9123	24.00
-1.97	.9728	-.7381	-.5045	.6302	.1083	-.2289	.9643	-.7171	-.4977	1.8630	.9230	.9131	24.00
.05	1.1534	-.7061	-.4170	.7821	.1261	-.1420	1.1449	-.6871	-.4108	1.8607	.9211	.9112	23.99
2.01	1.3643	-.6713	-.3004	.9641	.1495	-.0248	1.3543	-.6508	-.2935	1.8597	.9230	.9131	23.99
3.97	1.5431	-.6183	-.2078	1.1174	.1839	.0662	1.5347	-.6026	-.2025	1.8587	.9180	.9082	23.98
5.99	1.7325	-.5565	-.1076	1.2782	.2310	.1668	1.7232	-.5403	-.1020	1.8612	.9189	.9091	23.99
7.98	1.9395	-.4837	-.0038	1.4583	.2873	.2706	1.9297	-.4681	.0018	1.8604	.9186	.9088	23.99
10.05	2.1835	-.3808	.1297	1.6762	.3704	.4032	2.1745	-.3675	.1345	1.8579	.9162	.9064	23.98
12.00	2.3206	-.2809	.2041	1.7873	.4537	.4780	2.3104	-.2668	.2093	1.8589	.9176	.9078	23.98
14.03	2.4314	-.1710	.2831	2.0048	.4178	.4918	2.4137	-.1466	.2918	1.6671	.7303	.7271	21.90
16.01	2.5593	-.0516	.3796	1.9755	.6443	.6537	2.5477	-.0379	.3850	1.8581	.9182	.9084	23.98
20.05	2.8479	.2264	.5797	2.2177	.8783	.8534	2.8365	.2382	.5847	1.8586	.9165	.9067	23.98
24.02	3.0628	.5151	.7766	2.3901	1.1209	1.0498	3.0517	.5251	.7811	1.8583	.9151	.9054	23.98
RUN = 219													
-1.93	1.3039	-1.2930	-.7114	.6575	.1191	-.2162	1.2829	-1.2470	-.6953	2.5585	1.5505	1.5531	26.53
.01	1.4473	-1.2391	-.6477	.7605	.1369	-.1577	1.4313	-1.2070	-.6362	2.5419	1.5359	1.5379	26.51
2.01	1.6730	-1.1939	-.5408	.9370	.1600	-.0497	1.6544	-1.1597	-.5283	2.5453	1.5389	1.5410	26.52
6.06	2.0975	-1.0551	-.3330	1.2690	.2415	.1573	2.0777	-1.0243	-.3214	2.5456	1.5366	1.5387	26.52
8.06	2.3385	-.9657	-.2191	1.4654	.3010	.2711	2.3178	-.9357	-.2075	2.5449	1.5364	1.5385	26.52
10.02	2.5294	-.8668	-.1282	1.6122	.3712	.3628	2.5064	-.8357	-.1158	2.5449	1.5386	1.5407	26.52
12.03	2.7345	-.7429	-.0171	1.7756	.4609	.4732	2.7114	-.7139	-.0053	2.5420	1.5369	1.5390	26.51
13.98	2.8593	-.6215	.0463	1.8598	.5492	.5367	2.8351	-.5931	.0582	2.5427	1.5372	1.5393	26.51
15.95	2.9949	-.4913	.1543	1.9555	.6444	.6447	2.9695	-.4636	.1662	2.5421	1.5374	1.5395	26.51
19.93	3.2859	-.1962	.3577	2.1710	.8638	.8479	3.2595	-.1711	.3694	2.5420	1.5364	1.5384	26.51
23.96	3.5343	.1248	.5478	2.3486	1.1032	1.0375	3.5071	.1473	.5590	2.5408	1.5353	1.5373	26.51
3.95	1.8657	-1.1221	-.4491	1.0886	.1990	.0393	1.8502	-1.0957	-.4393	2.5448	1.5306	1.5327	26.52

TABLE 5.- CONTINUED.

VEO-WING 1/10-SCALE RESEARCH MODEL,VSTOL TEST NO. 204

ALPHA	CL	CD	CPM	CLE2	CDE2	CME2	CLCT	CDCT	CMCT	NPR	CT	CTRF	THETAJ
RUN = 220													
2.01	1.9077	-1.6661	-.7204	.9205	.1505	-.0687	1.8848	-1.6240	-.7053	3.1113	2.0475	2.0676	26.51
3.97	2.1583	-1.6014	-.6066	1.1072	.1844	.0465	2.1317	-1.5562	-.5901	3.1155	2.0519	2.0721	26.51
6.02	2.4354	-1.5167	-.4781	1.3194	.2330	.1761	2.4055	-1.4698	-.4605	3.1165	2.0551	2.0753	26.51
7.98	2.6219	-1.4289	-.4065	1.4434	.2865	.2495	2.5871	-1.3782	-.3871	3.1183	2.0608	2.0812	26.51
10.05	2.8685	-1.3063	-.2872	1.6320	.3612	.3672	2.8350	-1.2612	-.2695	3.1158	2.0557	2.0759	26.51
12.01	3.0589	-1.1730	-.1875	1.7716	.4438	.4639	3.0296	-1.1362	-.1727	3.1139	2.0466	2.0667	26.51
14.03	3.2321	-1.0292	-.1044	1.8857	.5448	.5486	3.1985	-.9900	-.0881	3.1173	2.0511	2.0713	26.51
15.96	3.3599	-.8885	-.0169	1.9643	.6362	.6346	3.3280	-.8536	-.0020	3.1132	2.0468	2.0669	26.51
20.01	3.6663	-.5653	.1745	2.1649	.8585	.8267	3.6304	-.5313	.1901	3.1155	2.0490	2.0692	26.51
23.97	3.9696	-.2068	.3754	2.3715	1.1114	1.0284	3.9295	-.1737	.3918	3.1113	2.0515	2.0716	26.51
RUN = 221													
-3.66	.3445	.0748	-.1462	.3445	.0748	-.1462	.3445	.0748	-.1462	1.0000	0.0000	0.0000	0.00
-1.98	.5050	.0820	-.0602	.5050	.0820	-.0602	.5050	.0820	-.0602	1.0000	0.0000	0.0000	0.00
-.00	.6889	.0959	.0501	.6889	.0959	.0501	.6889	.0959	.0501	1.0000	0.0000	0.0000	0.00
2.00	.8287	.1219	.1387	.8287	.1219	.1387	.8287	.1219	.1387	1.0000	0.0000	0.0000	0.00
4.02	1.0217	.1575	.2492	1.0217	.1575	.2492	1.0217	.1575	.2492	1.0000	0.0000	0.0000	0.00
5.99	1.1862	.2026	.3367	1.1862	.2026	.3367	1.1862	.2026	.3367	1.0000	0.0000	0.0000	0.00
8.03	1.3270	.2526	.4205	1.3270	.2526	.4205	1.3270	.2526	.4205	1.0000	0.0000	0.0000	0.00
10.03	1.4478	.3137	.5031	1.4478	.3137	.5031	1.4478	.3137	.5031	1.0006	0.0000	0.0000	0.00
12.05	1.6025	.4023	.5915	1.6025	.4023	.5915	1.6025	.4023	.5915	1.0000	0.0000	0.0000	0.00
14.09	1.7248	.4874	.6691	1.7248	.4874	.6691	1.7248	.4874	.6691	1.0006	0.0000	0.0000	0.00
15.99	1.8570	.5817	.7747	1.8570	.5817	.7747	1.8570	.5817	.7747	1.0000	0.0000	0.0000	0.00
18.03	1.9614	.6779	.8899	1.9614	.6779	.8899	1.9614	.6779	.8899	1.0000	0.0000	0.0000	0.00
19.96	2.0358	.7721	.9720	2.0358	.7721	.9720	2.0358	.7721	.9720	1.0000	0.0000	0.0000	0.00
21.98	2.1172	.8824	1.0637	2.1172	.8824	1.0637	2.1172	.8824	1.0637	1.0000	0.0000	0.0000	0.00
23.97	2.1548	1.0007	1.1204	2.1548	1.0007	1.1204	2.1548	1.0007	1.1204	1.0000	0.0000	0.0000	0.00
RUN = 222													
-3.58	.6919	-.4066	-.3097	.5514	.0768	-.1737	.6913	-.4046	-.3092	1.4350	.5020	.5034	19.79
-1.97	.8446	-.3930	-.2328	.6909	.0851	-.0972	.8443	-.3923	-.2326	1.4343	.5007	.5022	19.79
.02	1.0212	-.3665	-.1353	.8512	.1054	.0002	1.0211	-.3664	-.1352	1.4337	.5001	.5015	19.79
2.02	1.1865	-.3303	-.0423	.9996	.1366	.0935	1.1859	-.3289	-.0419	1.4351	.5015	.5029	19.79
4.02	1.3966	-.2845	.0711	1.1939	.1750	.2068	1.3963	-.2837	.0713	1.4341	.5008	.5022	19.79
5.95	1.5649	-.2316	.1452	1.3467	.2210	.2809	1.5645	-.2307	.1454	1.4343	.5010	.5024	19.79
8.02	1.7664	-.1593	.2426	1.5325	.2843	.3781	1.7664	-.1593	.2427	1.4334	.5000	.5015	19.79
10.01	1.9378	-.0797	.3391	1.6885	.3556	.4746	1.9377	-.0796	.3391	1.4335	.5001	.5016	19.79
12.08	2.1115	.0205	.4333	1.8466	.4467	.5688	2.1113	.0208	.4334	1.4335	.5003	.5018	19.79
13.96	2.2225	.1061	.5197	1.9433	.5239	.6555	2.2219	.1070	.5200	1.4342	.5010	.5025	19.79
16.04	2.3667	.2225	.6171	2.0728	.6296	.7527	2.3663	.2231	.6173	1.4339	.5006	.5021	19.79
20.06	2.6139	.4659	.8106	2.2914	.8524	.9465	2.6127	.4674	.8111	1.4348	.5020	.5034	19.79
24.02	2.7369	.7246	.9620	2.3870	1.0892	1.0985	2.7341	.7274	.9631	1.4363	.5040	.5053	19.79

TABLE 5.- CONTINUED.

VEO-WING 1/10-SCALE RESEARCH MODEL, VSTOL TEST NO. 204

ALPHA	CL	CD	CPM	CLE2	CDE2	CME2	CLCT	CDCT	CMCT	NPR	CT	CTRF	THETAJ
RUN = 223													
-3.52	.8978	-.7354	-.4560	.5805	.1144	-.1822	.8919	-.7197	-.4510	1.8605	.9169	.9072	23.99
-1.95	1.0462	-.7122	-.3814	.7076	.1244	-.1090	1.0416	-.7009	-.3777	1.8584	.9123	.9025	23.98
.05	1.2376	-.6831	-.2831	.8679	.1461	-.0091	1.2305	-.6671	-.2778	1.8570	.9178	.9080	23.97
2.09	1.4726	-.6354	-.1551	1.0752	.1778	.1179	1.4661	-.6221	-.1506	1.8541	.9149	.9051	23.96
4.04	1.6435	-.5800	-.0709	1.2193	.2183	.2017	1.6371	-.5680	-.0668	1.8524	.9138	.9040	23.95
6.02	1.8831	-.5177	.0251	1.4274	.2709	.3001	1.8729	-.5000	.0313	1.8617	.9206	.9108	24.00
7.97	2.0579	-.4400	.1033	1.5762	.3320	.3780	2.0475	-.4234	.1092	1.8608	.9197	.9099	23.99
10.01	2.2623	-.3421	.2102	1.7552	.4101	.4839	2.2529	-.3282	.2153	1.8579	.9170	.9072	23.98
11.98	2.4251	-.2358	.2906	1.8932	.4976	.5639	2.4159	-.2232	.2953	1.8570	.9158	.9060	23.97
14.01	2.5604	-.1291	.3799	2.0027	.5852	.6533	2.5507	-.1166	.3847	1.8573	.9160	.9062	23.97
15.98	2.7122	-.0044	.4783	2.1305	.6900	.7515	2.7023	.0075	.4829	1.8569	.9156	.9058	23.97
19.96	2.9749	.2626	.6828	2.3466	.9148	.9561	2.9644	.2736	.6874	1.8564	.9154	.9056	23.97
24.01	3.1127	.5559	.8293	2.4388	1.1630	1.1030	3.1003	.5671	.8343	1.8578	.9169	.9071	23.98
RUN = 224													
-3.14	1.2000	-1.2881	-.6455	.5936	.1155	-.1585	1.1892	-1.2632	-.6369	2.5382	1.5271	1.5290	26.51
-2.02	1.3140	-1.2686	-.6038	.6790	.1257	-.1159	1.3015	-1.2410	-.5941	2.5354	1.5303	1.5321	26.51
.06	1.5421	-1.2218	-.5083	.8555	.1512	-.0193	1.5272	-1.1921	-.4977	2.5386	1.5331	1.5351	26.51
2.09	1.7877	-1.1594	-.3786	1.0561	.1828	.1081	1.7748	-1.1357	-.3701	2.5316	1.5269	1.5286	26.50
4.04	1.9979	-1.0920	-.2866	1.2206	.2253	.2005	1.9839	-1.0681	-.2778	2.5346	1.5277	1.5295	26.51
6.03	2.2152	-1.0186	-.2001	1.3914	.2725	.2877	2.1992	-.9935	-.1906	2.5372	1.5296	1.5315	26.51
8.01	2.4280	-.9235	-.1124	1.5629	.3349	.3738	2.4136	-.9025	-.1043	2.5316	1.5254	1.5271	26.50
9.99	2.5876	-.8287	-.0447	1.6774	.4015	.4426	2.5706	-.8057	-.0356	2.5331	1.5286	1.5303	26.50
12.03	2.8342	-.6988	.0745	1.8804	.4988	.5620	2.8160	-.6759	.0838	2.5335	1.5292	1.5310	26.50
14.03	2.9693	-.5751	.1456	1.9755	.5870	.6325	2.9515	-.5542	.1543	2.5316	1.5274	1.5291	26.50
15.96	3.1565	-.4350	.2600	2.1229	.6943	.7475	3.1368	-.4135	.2693	2.5337	1.5292	1.5310	26.50
20.05	3.4596	-.1272	.4708	2.3485	.9254	.9582	3.4387	-.1074	.4800	2.5333	1.5289	1.5306	26.50
23.97	3.6031	.1863	.6145	2.4248	1.1586	1.1008	3.5830	.2029	.6228	2.5291	1.5261	1.5277	26.50
RUN = 225													
-2.13	1.5280	-1.7322	-.7769	.6895	.1184	-.1366	1.5228	-1.7206	-.7728	3.0756	2.0127	2.0318	26.51
.00	1.7951	-1.6763	-.6627	.8879	.1426	-.0222	1.7890	-1.6641	-.6584	3.0766	2.0134	2.0326	26.51
2.03	2.0164	-1.6130	-.5633	1.0459	.1719	.0769	2.0104	-1.6019	-.5593	3.0761	2.0126	2.0317	26.51
6.02	2.4941	-1.4583	-.3712	1.3983	.2599	.2710	2.4839	-1.4425	-.3652	3.0806	2.0187	2.0379	26.51
7.99	2.6973	-1.3570	-.2918	1.5448	.3201	.3494	2.6883	-1.3439	-.2868	3.0741	2.0158	2.0349	26.51
10.06	2.9456	-1.2434	-.1926	1.7298	.3960	.4506	2.9325	-1.2256	-.1856	3.0749	2.0219	2.0411	26.51
11.97	3.1705	-1.1035	-.0923	1.9038	.4903	.5492	3.1601	-1.0903	-.0870	3.0776	2.0166	2.0358	26.51
13.99	3.3491	-.9627	.0010	2.0272	.5855	.6424	3.3383	-.9500	.0062	3.0784	2.0165	2.0357	26.51
16.02	3.5364	-.8002	.0997	2.1614	.6986	.7406	3.5263	-.7893	.1044	3.0768	2.0148	2.0339	26.51
19.99	3.8658	-.4650	.3112	2.3960	.9301	.9498	3.8603	-.4598	.3136	3.0711	2.0075	2.0265	26.51
24.02	4.0102	-.1263	.4385	2.4412	1.1660	1.0790	3.9997	-.1176	.4428	3.0781	2.0135	2.0326	26.51

TABLE 5.- CONTINUED.

VEO-WING 1/10-SCALE RESEARCH MODEL,VSTOL TEST NO. 204

ALPHA	CL	CD	CPM	CLE2	CDE2	CME2	CLCT	CDCT	CMCT	NPR	CT	CTRF	THETAJ
RUN = 227													
-3.75	.2787	.0603	-.2717	.2787	.0603	-.2717	.2787	.0603	-.2717	1.0000	0.0000	0.0000	0.00
-2.05	.4123	.0632	-.1906	.4123	.0632	-.1906	.4123	.0632	-.1906	1.0000	0.0000	0.0000	0.00
-.04	.5838	.0756	-.1003	.5838	.0756	-.1003	.5838	.0756	-.1003	1.0010	0.0000	0.0000	0.00
1.94	.7465	.0947	-.0093	.7465	.0947	-.0093	.7465	.0947	-.0093	1.0000	0.0000	0.0000	0.00
3.95	.9221	.1243	.0798	.9221	.1243	.0798	.9221	.1243	.0798	1.0000	0.0000	0.0000	0.00
5.98	1.1085	.1634	.1874	1.1085	.1634	.1874	1.1085	.1634	.1874	1.0000	0.0000	0.0000	0.00
7.97	1.2693	.2135	.2820	1.2693	.2135	.2820	1.2693	.2135	.2820	1.0000	0.0000	0.0000	0.00
9.96	1.3742	.2694	.3611	1.3742	.2694	.3611	1.3742	.2694	.3611	1.0000	0.0000	0.0000	0.00
12.01	1.5698	.3520	.4642	1.5698	.3520	.4642	1.5698	.3520	.4642	1.0000	0.0000	0.0000	0.00
14.01	1.6864	.4325	.5471	1.6864	.4325	.5471	1.6864	.4325	.5471	1.0000	0.0000	0.0000	0.00
16.03	1.8152	.5265	.6266	1.8152	.5265	.6266	1.8152	.5265	.6266	1.0000	0.0000	0.0000	0.00
17.95	1.9416	.6304	.6837	1.9416	.6304	.6837	1.9416	.6304	.6837	1.0000	0.0000	0.0000	0.00
19.97	2.0508	.7386	.7637	2.0508	.7386	.7637	2.0508	.7386	.7637	1.0000	0.0000	0.0000	0.00
22.15	2.1169	.8542	.8386	2.1169	.8542	.8386	2.1169	.8542	.8386	1.0000	0.0000	0.0000	0.00
24.01	2.1403	.9563	.8896	2.1403	.9563	.8896	2.1403	.9563	.8896	1.0000	0.0000	0.0000	0.00
4.01	.9341	.1318	.0716	.9341	.1318	.0716	.9341	.1318	.0716	1.0000	0.0000	0.0000	0.00
11.99	1.5599	.3562	.4437	1.5599	.3562	.4437	1.5599	.3562	.4437	1.0000	0.0000	0.0000	0.00
16.00	1.8213	.5342	.6188	1.8213	.5342	.6188	1.8213	.5342	.6188	1.0000	0.0000	0.0000	0.00
19.98	2.0223	.7398	.7454	2.0223	.7398	.7454	2.0223	.7398	.7454	1.0000	0.0000	0.0000	0.00
RUN = 228													
-3.68	.5901	-.4124	-.4405	.4499	.0725	-.3041	.5891	-.4089	-.4396	1.4398	.5036	.5048	19.80
-2.01	.7543	-.3999	-.3605	.6001	.0805	-.2241	.7533	-.3967	-.3596	1.4390	.5034	.5046	19.80
-.02	.9529	-.3795	-.2668	.7816	.0967	-.1301	.9513	-.3749	-.2655	1.4397	.5049	.5060	19.80
1.96	1.1123	-.3511	-.1770	.9246	.1190	-.0402	1.1104	-.3464	-.1756	1.4399	.5051	.5062	19.80
4.06	1.3100	-.3068	-.0746	1.1058	.1546	.0617	1.3086	-.3037	-.0737	1.4406	.5034	.5045	19.80
5.98	1.4705	-.2598	.0126	1.2510	.1945	.1490	1.4690	-.2566	.0136	1.4416	.5036	.5046	19.81
8.04	1.6654	-.1922	.1136	1.4301	.2531	.2498	1.6642	-.1899	.1144	1.4417	.5027	.5037	19.81
10.09	1.8506	-.1158	.2186	1.5985	.3226	.3553	1.8482	-.1117	.2199	1.4422	.5047	.5057	19.81
12.02	1.9970	-.0262	.2921	1.7304	.4032	.4287	1.9947	-.0225	.2933	1.4417	.5044	.5054	19.81
14.06	2.1862	.0905	.3944	1.9045	.5102	.5310	2.1838	.0942	.3956	1.4417	.5044	.5055	19.81
15.97	2.2928	.1920	.4648	1.9969	.6026	.6016	2.2898	.1961	.4661	1.4410	.5051	.5062	19.81
18.02	2.4237	.3063	.5239	2.1133	.7062	.6608	2.4206	.3104	.5253	1.4408	.5051	.5062	19.81
20.07	2.5613	.4410	.6028	2.2380	.8280	.7392	2.5592	.4435	.6037	1.4421	.5032	.5043	19.81
22.15	2.6552	.5686	.6858	2.3165	.9454	.8228	2.6515	.5728	.6873	1.4416	.5056	.5067	19.81
24.03	2.6977	.6956	.7473	2.3468	1.0610	.8842	2.6939	.6996	.7488	1.4414	.5055	.5065	19.81

TABLE 5.- CONTINUED.

VEO-WING 1/10-SCALE RESEARCH MODEL, VSTOL TEST NO. 204

ALPHA	CL	CD	CPM	CLE2	CDE2	CME2	CLCT	CDCT	CMCT	NPR	CT	CTRF	THETAJ
RUN = 229													
-3.60	.8135	-.7336	-.5900	.4951	.1212	-.3144	.8059	-.7132	-.5834	1.8682	.9220	.9122	24.03
-2.04	.9651	-.7143	-.5177	.6233	.1320	-.2419	.9567	-.6936	-.5110	1.8690	.9226	.9128	24.03
-.02	1.1546	-.6826	-.4288	.7839	.1499	-.1536	1.1461	-.6635	-.4225	1.8676	.9211	.9113	24.03
2.02	1.3423	-.6477	-.3392	.9417	.1718	-.0636	1.3327	-.6282	-.3326	1.8687	.9220	.9122	24.03
4.04	1.5399	-.5984	-.2322	1.1112	.2057	.0431	1.5301	-.5800	-.2259	1.8675	.9211	.9113	24.03
6.11	1.7445	-.5346	-.1312	1.2876	.2525	.1437	1.7346	-.5176	-.1252	1.8660	.9199	.9101	24.02
8.01	1.9405	-.4592	-.0381	1.4583	.3118	.2365	1.9305	-.4431	-.0324	1.8658	.9191	.9093	24.02
9.97	2.1369	-.3773	.0574	1.6238	.3826	.3346	2.1221	-.3554	.0654	1.8740	.9267	.9169	24.06
12.08	2.3144	-.2706	.1455	1.7729	.4711	.4230	2.2980	-.2481	.1539	1.8727	.9281	.9183	24.05
14.07	2.4885	-.1447	.2406	1.9237	.5752	.5171	2.4733	-.1254	.2480	1.8715	.9248	.9150	24.05
16.02	2.6280	-.0212	.3282	2.0391	.6788	.6047	2.6124	-.0026	.3355	1.8721	.9246	.9148	24.05
17.99	2.7668	.1024	.3927	2.1541	.7816	.6692	2.7505	.1204	.4001	1.8735	.9245	.9147	24.06
20.06	2.8680	.2366	.4585	2.2314	.8933	.7350	2.8511	.2539	.4658	1.8723	.9245	.9147	24.05
22.11	2.9224	.3725	.5245	2.2612	1.0075	.8016	2.9034	.3907	.5325	1.8730	.9266	.9168	24.05
24.08	3.0408	.5239	.6126	2.3585	1.1353	.8895	3.0217	.5410	.6204	1.8723	.9260	.9162	24.05
RUN = 230													
-3.57	1.0830	-1.2840	-.8072	.4831	.1326	-.3168	1.0689	-1.2508	-.7957	2.5529	1.5360	1.5384	26.53
-2.02	1.2714	-1.2498	-.7100	.6382	.1404	-.2234	1.2608	-1.2264	-.7019	2.5409	1.5256	1.5276	26.51
.02	1.4461	-1.2077	-.6545	.7629	.1606	-.1672	1.4338	-1.1832	-.6457	2.5429	1.5273	1.5294	26.51
1.95	1.6648	-1.1599	-.5428	.9367	.1829	-.0562	1.6526	-1.1374	-.5347	2.5408	1.5255	1.5275	26.51
4.05	1.8751	-1.0962	-.4426	1.1007	.2157	.0426	1.8641	-1.0775	-.4357	2.5360	1.5216	1.5234	26.51
6.07	2.0968	-1.0253	-.3459	1.2742	.2619	.1407	2.0830	-1.0037	-.3378	2.5418	1.5256	1.5276	26.51
8.04	2.3111	-.9418	-.2528	1.4418	.3204	.2356	2.2939	-.9168	-.2431	2.5473	1.5304	1.5326	26.52
10.05	2.5113	-.8389	-.1576	1.5993	.3907	.3302	2.4941	-.8157	-.1484	2.5451	1.5288	1.5310	26.52
12.07	2.7143	-.7165	-.0586	1.7606	.4791	.4287	2.6973	-.6951	-.0499	2.5433	1.5273	1.5293	26.52
14.01	2.9009	-.5808	.0433	1.9083	.5805	.5300	2.8842	-.5613	.0515	2.5419	1.5257	1.5277	26.51
16.05	3.0466	-.4396	.1202	2.0125	.6862	.6072	3.0286	-.4200	.1286	2.5435	1.5266	1.5286	26.52
18.13	3.2290	-.2859	.2000	2.1543	.8020	.6873	3.2100	-.2666	.2087	2.5444	1.5271	1.5292	26.52
20.08	3.3270	-.1434	.2604	2.2176	.9060	.7469	3.3088	-.1262	.2684	2.5425	1.5251	1.5271	26.51
22.03	3.3940	-.0043	.3220	2.2485	1.0077	.8090	3.3742	.0132	.3304	2.5438	1.5265	1.5285	26.52
24.01	3.5044	.1607	.3964	2.3237	1.1330	.8837	3.4832	.1782	.4051	2.5425	1.5275	1.5295	26.51

TABLE 5.- CONTINUED.

VEO-WING 1/10-SCALE RESEARCH MODEL, VSTOL TEST NO. 204

ALPHA	CL	CD	CPM	CLE2	CDE2	CME2	CLCT	CDCT	CMCT	NPR	CT	CTRF	THETAJ
RUN = 231													
-2.01	1.4657	-1.7222	-.8937	.6173	.1394	-.2489	1.4548	-1.6982	-.8854	3.1016	2.0261	2.0458	26.51
-.06	1.6740	-1.6706	-.8169	.7643	.1579	-.1733	1.6638	-1.6501	-.8097	3.0981	2.0227	2.0423	26.51
1.98	1.9214	-1.6259	-.7160	.9460	.1718	-.0714	1.9091	-1.6032	-.7078	3.1012	2.0257	2.0454	26.51
3.99	2.1456	-1.5534	-.6152	1.1087	.2072	.0287	2.1335	-1.5329	-.6077	3.0993	2.0236	2.0432	26.51
5.98	2.3704	-1.4700	-.5200	1.2730	.2531	.1238	2.3578	-1.4502	-.5126	3.0988	2.0232	2.0428	26.51
8.00	2.6038	-1.3725	-.4216	1.4465	.3109	.2222	2.5905	-1.3532	-.4142	3.0983	2.0232	2.0429	26.51
10.07	2.8265	-1.2601	-.3252	1.6087	.3811	.3189	2.8120	-1.2406	-.3175	3.0981	2.0240	2.0436	26.51
12.05	3.0310	-1.1311	-.2325	1.7576	.4664	.4113	3.0164	-1.1127	-.2251	3.0974	2.0233	2.0429	26.51
14.01	3.2161	-.9918	-.1349	1.8878	.5623	.5094	3.1998	-.9728	-.1270	3.0985	2.0247	2.0444	26.51
16.01	3.3868	-.8306	-.0543	2.0063	.6751	.5895	3.3710	-.8134	-.0469	3.0968	2.0232	2.0428	26.51
17.98	3.5608	-.6759	.0055	2.1287	.7818	.6495	3.5439	-.6587	.0131	3.0974	2.0238	2.0434	26.51
20.07	3.6421	-.5159	.0744	2.1597	.8868	.7175	3.6265	-.5011	.0811	3.0947	2.0213	2.0408	26.51
21.99	3.7589	-.3528	.1487	2.2294	1.0003	.7922	3.7419	-.3377	.1559	3.0957	2.0225	2.0421	26.51
24.07	3.9340	-.1475	.2350	2.3579	1.1482	.8780	3.9178	-.1341	.2416	3.0946	2.0208	2.0403	26.51
RUN = 232													
7.90	1.2559	.2343	.2545	1.2559	.2343	.2545	1.2559	.2343	.2545	1.0000	0.0000	0.0000	0.00
7.98	1.3569	.1632	.2199	1.2992	.2491	.2533	1.3802	.1286	.2064	1.0445	.0712	.1034	25.90
7.99	1.4894	.0584	.1621	1.3799	.2439	.2254	1.4928	.0526	.1602	1.1517	.1940	.2154	22.54
8.00	1.5783	-.1139	.1072	1.3924	.2373	.2142	1.5831	-.1229	.1045	1.3311	.3900	.3974	19.90
8.03	1.8984	-.3966	-.0034	1.4723	.3043	.2401	1.8834	-.3719	.0052	1.7694	.8293	.8203	23.27
8.03	2.1383	-.7003	-.1450	1.4616	.3179	.2361	2.1221	-.6759	-.1359	2.2067	1.2294	1.2226	25.58
8.03	2.3690	-1.0217	-.3035	1.4367	.3282	.2210	2.3493	-.9932	-.2924	2.6673	1.6345	1.6406	26.61
8.02	2.6034	-1.3711	-.4312	1.4373	.3237	.2172	2.5821	-1.3402	-.4194	3.1155	2.0372	2.0572	26.51
8.01	3.3036	-2.2852	-.8305	1.4338	.3975	.2289	3.2835	-2.2564	-.8191	3.5029	3.2347	3.2699	26.87
8.00	4.2461	-3.5634	-1.3777	1.4473	.4563	.2063	4.2201	-3.5260	-1.3630	3.4812	4.8450	4.8981	26.84
RUN = 233													
8.01	1.2892	.2613	.2974	1.2892	.2613	.2974	1.2892	.2613	.2974	1.0000	0.0000	0.0000	0.00
8.02	1.3572	.1786	.2472	1.2974	.2679	.2818	1.3762	.1502	.2363	1.0486	.0759	.1075	25.78
8.03	1.5127	.0934	.2182	1.4095	.2656	.2778	1.5254	.0723	.2109	1.1380	.1781	.2007	22.91
8.02	1.6162	-.0960	.1475	1.4270	.2618	.2564	1.6172	-.0979	.1469	1.3393	.3979	.4048	19.86
8.01	2.1241	-.6846	-.1268	1.4454	.3365	.2556	2.1060	-.6574	-.1166	2.2120	1.2329	1.2261	25.61
8.03	2.3864	-.9853	-.2671	1.4630	.3517	.2524	2.3754	-.9694	-.2609	2.6516	1.6193	1.6249	26.60
7.99	2.6304	-1.3559	-.4073	1.4613	.3450	.2433	2.6054	-1.3194	-.3933	3.1167	2.0439	2.0640	26.51
8.02	3.3195	-2.2735	-.8156	1.4388	.4215	.2511	3.2899	-2.2311	-.7988	3.5245	3.2512	3.2864	26.89
7.98	4.2576	-3.5708	-1.3742	1.4346	.4851	.2257	4.2643	-3.5805	-1.3780	3.4945	4.8883	4.9417	26.86
7.98	4.2683	-3.5613	-1.3675	1.4454	.4914	.2336	4.2765	-3.5731	-1.3721	3.5103	4.8858	4.9389	26.88

TABLE 5.- CONTINUED.

VEO-WING 1/10-SCALE RESEARCH MODEL, VSTOL TEST NO. 204

ALPHA	CL	CD	CPM	CLE2	CDE2	CME2	CLCT	CDCT	CMCT	NPR	CT	CTRF	THETAJ
RUN = 234													
-3.73	.3224	.0615	-.2294	.3224	.0615	-.2294	.3224	.0615	-.2294	1.0000	0.0000	0.0000	0.00
-2.02	.4369	.0685	-.1851	.4369	.0685	-.1851	.4369	.0685	-.1851	1.0000	0.0000	0.0000	0.00
-.00	.5816	.0808	-.1291	.5816	.0808	-.1291	.5816	.0808	-.1291	1.0000	0.0000	0.0000	0.00
2.00	.7130	.0971	-.0827	.7130	.0971	-.0827	.7130	.0971	-.0827	1.0000	0.0000	0.0000	0.00
4.03	.8822	.1187	-.0350	.8822	.1187	-.0350	.8822	.1187	-.0350	1.0000	0.0000	0.0000	0.00
6.05	.9785	.1486	.0289	.9785	.1486	.0289	.9785	.1486	.0289	1.0000	0.0000	0.0000	0.00
8.01	1.0845	.1924	.0707	1.0845	.1924	.0707	1.0845	.1924	.0707	1.0000	0.0000	0.0000	0.00
10.07	1.1891	.2503	.1228	1.1891	.2503	.1228	1.1891	.2503	.1228	1.0000	0.0000	0.0000	0.00
12.04	1.2616	.3171	.1751	1.2616	.3171	.1751	1.2616	.3171	.1751	1.0000	0.0000	0.0000	0.00
13.99	1.3526	.4086	.2222	1.3526	.4086	.2222	1.3526	.4086	.2222	1.0000	0.0000	0.0000	0.00
16.01	1.4596	.4916	.2689	1.4596	.4916	.2689	1.4596	.4916	.2689	1.0000	0.0000	0.0000	0.00
18.02	1.5212	.5662	.3312	1.5212	.5662	.3312	1.5212	.5662	.3312	1.0000	0.0000	0.0000	0.00
20.07	1.6147	.6526	.4087	1.6147	.6526	.4087	1.6147	.6526	.4087	1.0000	0.0000	0.0000	0.00
22.06	1.6860	.7365	.4832	1.6860	.7365	.4832	1.6860	.7365	.4832	1.0000	0.0000	0.0000	0.00
24.07	1.7172	.8119	.5409	1.7172	.8119	.5409	1.7172	.8119	.5409	1.0000	0.0000	0.0000	0.00
RUN = 235													
-3.69	.6331	-.4072	-.4111	.4936	.0758	-.2752	.6327	-.4056	-.4106	1.4403	.5017	.5028	19.80
-1.99	.7351	-.3938	-.3700	.5810	.0857	-.2339	.7343	-.3914	-.3693	1.4397	.5025	.5037	19.80
-.04	.8973	-.3736	-.3152	.7271	.1002	-.1792	.8965	-.3715	-.3146	1.4393	.5022	.5034	19.80
2.06	1.0476	-.3466	-.2630	.8598	.1214	-.1267	1.0464	-.3438	-.2621	1.4390	.5031	.5043	19.80
4.05	1.1982	-.3155	-.2129	.9943	.1459	-.0765	1.1969	-.3125	-.2120	1.4391	.5033	.5045	19.80
5.99	1.3704	-.2686	-.1594	1.1507	.1860	-.0229	1.3688	-.2652	-.1584	1.4395	.5037	.5049	19.80
8.01	1.4821	-.2096	-.1118	1.2469	.2364	.0245	1.4807	-.2070	-.1109	1.4388	.5030	.5042	19.80
10.07	1.5856	-.1420	-.0471	1.3343	.2956	.0893	1.5838	-.1390	-.0461	1.4393	.5035	.5047	19.80
12.06	1.6757	-.0637	-.0046	1.4088	.3658	.1321	1.6733	-.0599	-.0034	1.4403	.5045	.5057	19.80
13.97	1.8117	.0323	.0240	1.5305	.4528	.1607	1.8091	.0363	.0253	1.4405	.5048	.5059	19.80
16.01	1.9458	.1364	.0783	1.6498	.5466	.2150	1.9430	.1402	.0796	1.4404	.5047	.5058	19.80
17.99	2.0588	.2362	.1391	1.7487	.6360	.2759	2.0558	.2400	.1404	1.4406	.5049	.5060	19.80
20.08	2.1617	.3449	.2183	1.8373	.7332	.3551	2.1586	.3487	.2197	1.4406	.5049	.5060	19.80
22.12	2.2167	.4381	.2868	1.8779	.8153	.4239	2.2127	.4425	.2884	1.4416	.5059	.5070	19.81
24.07	2.2726	.5398	.3623	1.9216	.9050	.4993	2.2688	.5438	.3638	1.4412	.5055	.5066	19.81

TABLE 5.- CONTINUED.

VEO-WING 1/10-SCALE RESEARCH MODEL,VSTOL TEST NO. 204

ALPHA	CL	CD	CPM	CLE2	CDE2	CME2	CLCT	CDCT	CMCT	NPR	CT	CTRF	THETAJ
RUN = 236													
-3.63	.8254	-.7301	-.5548	.5071	.1257	-.2790	.8175	-.7089	-.5479	1.8678	.9229	.9131	24.03
-2.02	.9550	-.7057	-.5127	.6149	.1365	-.2385	.9483	-.6891	-.5073	1.8627	.9181	.9083	24.00
-.01	1.1289	-.6765	-.4600	.7600	.1527	-.1860	1.1219	-.6608	-.4548	1.8619	.9174	.9076	24.00
2.07	1.2743	-.6538	-.4135	.8748	.1627	-.1391	1.2662	-.6372	-.4079	1.8633	.9187	.9089	24.01
4.02	1.4510	-.6119	-.3587	1.0245	.1896	-.0846	1.4428	-.5965	-.3534	1.8622	.9177	.9079	24.00
6.04	1.6159	-.5562	-.3211	1.1605	.2313	-.0465	1.6063	-.5395	-.3153	1.8640	.9195	.9097	24.01
7.98	1.7612	-.4879	-.2574	1.2800	.2826	.0168	1.7516	-.4726	-.2520	1.8621	.9181	.9084	24.00
10.00	1.8557	-.4131	-.2079	1.3478	.3400	.0663	1.8457	-.3982	-.2024	1.8620	.9181	.9083	24.00
12.02	1.9968	-.3128	-.1553	1.4636	.4207	.1185	1.9872	-.2995	-.1503	1.8610	.9166	.9068	23.99
14.01	2.1429	-.1984	-.1254	1.5853	.5154	.1480	2.1334	-.1863	-.1207	1.8603	.9156	.9058	23.99
16.01	2.3022	-.0791	-.0682	1.7182	.6165	.2060	2.2907	-.0654	-.0628	1.8633	.9180	.9082	24.01
18.00	2.4356	.0420	-.0087	1.8278	.7168	.2655	2.4237	.0552	-.0033	1.8635	.9180	.9082	24.01
19.99	2.5331	.1565	.0627	1.9026	.8094	.3367	2.5211	.1689	.0679	1.8630	.9174	.9076	24.00
22.05	2.6044	.2688	.1350	1.9507	.8988	.4091	2.5918	.2810	.1403	1.8633	.9177	.9079	24.01
24.02	2.6743	.3870	.2164	1.9993	.9942	.4905	2.6613	.3987	.2217	1.8633	.9177	.9079	24.01
RUN = 237													
-3.60	1.0937	-1.2749	-.7708	.4974	.1348	-.2828	1.0827	-1.2489	-.7618	2.5556	1.5282	1.5306	26.53
-2.05	1.2713	-1.2518	-.7243	.6357	.1453	-.2352	1.2577	-1.2220	-.7138	2.5470	1.5327	1.5349	26.52
.04	1.4326	-1.2119	-.6794	.7459	.1616	-.1900	1.4176	-1.1820	-.6688	2.5488	1.5333	1.5356	26.52
2.00	1.6244	-1.1709	-.6253	.8909	.1786	-.1358	1.6083	-1.1413	-.6145	2.5491	1.5337	1.5360	26.52
4.04	1.8049	-1.1140	-.5774	1.0241	.2082	-.0880	1.7880	-1.0853	-.5668	2.5486	1.5333	1.5355	26.52
6.03	1.9822	-1.0453	-.5345	1.1569	.2479	-.0456	1.9650	-1.0184	-.5243	2.5472	1.5319	1.5341	26.52
8.01	2.1722	-.9642	-.4738	1.2994	.3039	.0169	2.1511	-.9336	-.4620	2.5528	1.5371	1.5395	26.52
10.02	2.2612	-.8781	-.4184	1.3483	.3538	.0702	2.2426	-.8531	-.4085	2.5461	1.5311	1.5332	26.52
12.02	2.3849	-.7756	-.3707	1.4292	.4243	.1181	2.3650	-.7507	-.3606	2.5470	1.5319	1.5341	26.52
14.03	2.5439	-.6516	-.3425	1.5460	.5146	.1467	2.5226	-.6268	-.3320	2.5478	1.5327	1.5349	26.52
16.05	2.7270	-.5136	-.2786	1.6891	.6164	.2103	2.7052	-.4899	-.2684	2.5471	1.5321	1.5343	26.52
18.02	2.8714	-.3790	-.2134	1.7958	.7141	.2753	2.8494	-.3565	-.2034	2.5463	1.5314	1.5336	26.52
20.09	2.9850	-.2444	-.1439	1.8705	.8094	.3448	2.9620	-.2226	-.1338	2.5466	1.5317	1.5338	26.52
22.01	3.0809	-.1149	-.0734	1.9299	.9026	.4161	3.0554	-.0923	-.0626	2.5482	1.5340	1.5362	26.52
24.04	3.1914	.0320	.0170	2.0053	1.0076	.5064	3.1655	.0533	.0277	2.5491	1.5335	1.5358	26.52

TABLE 5.- CONTINUED.

VEO-WING 1/10-SCALE RESEARCH MODEL,VSTOL TEST NO. 204

ALPHA	CL	CD	CPM	CLE2	CDE2	CME2	CLCT	CDCT	CMCT	NPR	CT	CTRF	THETAJ
RUN = 238													
-3.59	1.2807	-1.7692	-.9577	.4741	.1378	-.3049	1.2610	-1.7225	-.9417	3.1267	2.0503	2.0706	26.51
-2.07	1.4613	-1.7346	-.9058	.6066	.1459	-.2546	1.4424	-1.6930	-.8914	3.1267	2.0453	2.0656	26.51
-.03	1.6607	-1.6869	-.8581	.7388	.1634	-.2064	1.6396	-1.6445	-.8432	3.1284	2.0469	2.0672	26.51
2.04	1.8619	-1.6357	-.8037	.8747	.1782	-.1526	1.8402	-1.5960	-.7894	3.1262	2.0448	2.0651	26.51
4.01	2.0760	-1.5727	-.7500	1.0275	.2056	-.0992	2.0534	-1.5343	-.7360	3.1256	2.0441	2.0644	26.51
6.05	2.3053	-1.4933	-.7039	1.1933	.2479	-.0526	2.2806	-1.4545	-.6894	3.1273	2.0456	2.0659	26.51
7.99	2.4641	-1.4006	-.6472	1.2955	.2994	.0031	2.4397	-1.3651	-.6336	3.1241	2.0427	2.0630	26.51
10.01	2.5979	-1.3014	-.5836	1.3721	.3540	.0657	2.5741	-1.2692	-.5710	3.1207	2.0397	2.0598	26.51
12.03	2.7271	-1.1901	-.5417	1.4418	.4229	.1085	2.7005	-1.1568	-.5282	3.1236	2.0422	2.0624	26.51
14.02	2.9249	-1.0441	-.5169	1.5830	.5251	.1340	2.8958	-1.0100	-.5028	3.1260	2.0444	2.0647	26.51
16.02	3.0873	-.9026	-.4570	1.6930	.6170	.1931	3.0586	-.8713	-.4436	3.1236	2.0420	2.0623	26.51
18.02	3.2450	-.7514	-.3944	1.8000	.7174	.2552	3.2164	-.7224	-.3816	3.1218	2.0403	2.0605	26.51
20.11	3.3958	-.5898	-.3247	1.8972	.8263	.3252	3.3653	-.5610	-.3115	3.1231	2.0416	2.0618	26.51
22.08	3.4993	-.4446	-.2662	1.9510	.9208	.3846	3.4659	-.4152	-.2522	3.1252	2.0441	2.0643	26.51
24.03	3.6149	-.2968	-.1780	2.0135	1.0212	.4759	3.5731	-.2623	-.1609	3.1272	2.0537	2.0741	26.51
RUN = 239													
8.04	1.0552	.2226	.0690	1.0552	.2226	.0690	1.0552	.2226	.0690	1.0000	0.0000	0.0000	0.00
8.04	1.1905	.1615	.0386	1.1336	.2459	.0715	1.1336	.2459	.0715	1.0427	.0694	.1018	25.96
8.05	1.3117	.0560	-.0223	1.2019	.2418	.0411	1.3149	.0507	-.0241	1.1521	.1945	.2158	22.53
8.01	1.4321	-.1122	-.0801	1.2464	.2383	.0267	1.4373	-.1219	-.0830	1.3305	.3892	.3967	19.91
8.01	1.7081	-.4029	-.2180	1.2822	.2979	.0255	1.6932	-.3783	-.2094	1.7702	.8291	.8201	23.28
8.03	1.9632	-.7119	-.3530	1.2849	.3083	.0290	1.9456	-.6854	-.3431	2.2091	1.2319	1.2251	25.59
8.02	2.2232	-1.0283	-.5043	1.2906	.3224	.0204	2.2030	-.9991	-.4930	2.6655	1.6354	1.6414	26.61
8.02	2.4502	-1.3554	-.6294	1.2985	.3186	.0109	2.4431	-1.3449	-.6254	3.0893	2.0125	2.0319	26.51
7.96	3.1346	-2.3141	-1.0491	1.2519	.3917	.0193	3.0994	-2.2636	-1.0292	3.5077	3.2609	3.2964	26.87
8.00	4.0320	-3.5430	-1.5456	1.2549	.4463	.0269	4.0273	-3.5362	-1.5429	3.4856	4.8081	4.8607	26.85
RUN = 240													
-3.79	.2977	.0631	-.2618	.2977	.0631	-.2618	.2977	.0631	-.2618	1.0000	0.0000	0.0000	0.00
-1.97	.4525	.0664	-.1745	.4525	.0664	-.1745	.4525	.0664	-.1745	1.0000	0.0000	0.0000	0.00
.06	.5877	.0797	-.0924	.5877	.0797	-.0924	.5877	.0797	-.0924	1.0000	0.0000	0.0000	0.00
2.02	.7217	.0988	-.0132	.7217	.0988	-.0132	.7217	.0988	-.0132	1.0000	0.0000	0.0000	0.00
4.06	.9501	.1316	.0981	.9501	.1316	.0981	.9501	.1316	.0981	1.0000	0.0000	0.0000	0.00
6.02	1.1284	.1719	.1982	1.1284	.1719	.1982	1.1284	.1719	.1982	1.0000	0.0000	0.0000	0.00
8.05	1.3022	.2285	.2976	1.3022	.2285	.2976	1.3022	.2285	.2976	1.0000	0.0000	0.0000	0.00
9.97	1.4522	.2890	.3818	1.4522	.2890	.3818	1.4522	.2890	.3818	1.0000	0.0000	0.0000	0.00
12.04	1.6156	.3666	.4868	1.6156	.3666	.4868	1.6156	.3666	.4868	1.0000	0.0000	0.0000	0.00
14.06	1.7226	.4434	.5981	1.7226	.4434	.5981	1.7226	.4434	.5981	1.0000	0.0000	0.0000	0.00
16.06	1.8510	.5380	.6895	1.8510	.5380	.6895	1.8510	.5380	.6895	1.0000	0.0000	0.0000	0.00
18.06	1.9681	.6330	.7927	1.9681	.6330	.7927	1.9681	.6330	.7927	1.0006	0.0000	0.0000	0.00
20.02	2.0625	.7336	.8958	2.0625	.7336	.8958	2.0625	.7336	.8958	1.0000	0.0000	0.0000	0.00
22.06	2.1511	.8410	1.0055	2.1511	.8410	1.0055	2.1511	.8410	1.0055	1.0000	0.0000	0.0000	0.00
24.13	2.2377	.9677	1.1116	2.2377	.9677	1.1116	2.2377	.9677	1.1116	1.0000	0.0000	0.0000	0.00

TABLE 5.- CONTINUED.

VEO-WING 1/10-SCALE RESEARCH MODEL, VSTOL TEST NO. 204

ALPHA	CL	CD	CPM	CLE2	CDE2	CME2	CLCT	CDCT	CMCT	NPR	CT	CTRF	THETAJ
RUN # 242													
-3.68	.6263	-.4069	-.4404	.4911	.0790	-.3024	.6263	-.4067	-.4403	1.4589	.5002	.5044	19.23
-2.02	.7538	-.3916	-.3803	.6047	.0891	-.2426	.7541	-.3925	-.3805	1.4576	.4991	.5033	19.25
-.01	.9593	-.3675	-.2699	.7941	.1050	-.1328	.9605	-.3710	-.2709	1.4547	.4964	.5006	19.28
2.01	1.1403	-.3334	-.1800	.9587	.1322	-.0431	1.1419	-.3375	-.1812	1.4538	.4956	.4998	19.30
4.04	1.3122	-.2916	-.0840	1.1143	.1670	.0529	1.3141	-.2960	-.0853	1.4535	.4953	.4995	19.30
6.03	1.4948	-.2394	.0119	1.2812	.2120	.1487	1.4969	-.2438	.0106	1.4534	.4952	.4994	19.30
8.05	1.7305	-.1691	.1450	1.5014	.2737	.2816	1.7332	-.1742	.1434	1.4524	.4943	.4985	19.31
10.03	1.9046	-.0879	.2339	1.6605	.3463	.3704	1.9076	-.0932	.2322	1.4523	.4939	.4981	19.32
12.01	2.0492	.0029	.3233	1.7907	.4277	.4596	2.0528	-.0031	.3213	1.4522	.4930	.4972	19.32
14.01	2.1824	.0995	.4031	1.9078	.5170	.5401	2.1849	.0957	.4019	1.4514	.4954	.4996	19.33
16.03	2.3649	.2272	.5200	2.0777	.6319	.6561	2.3695	.2206	.5178	1.4517	.4920	.4963	19.32
18.00	2.4987	.3357	.6075	2.1969	.7316	.7439	2.5026	.3306	.6057	1.4523	.4936	.4978	19.32
20.02	2.6339	.4653	.7208	2.3186	.8500	.8572	2.6383	.4600	.7189	1.4519	.4932	.4974	19.32
22.04	2.7310	.5901	.8450	2.4023	.9635	.9814	2.7355	.5850	.8431	1.4518	.4932	.4974	19.32
23.99	2.7858	.7003	.9232	2.4440	1.0629	1.0597	2.7899	.6959	.9215	1.4523	.4940	.4982	19.31
RUN # 243													
-3.62	.8763	-.6662	-.6085	.5246	.1566	-.3111	.8784	-.6711	-.6103	1.8949	.8947	.8948	26.76
-2.01	1.0260	-.6440	-.5462	.6506	.1693	-.2483	1.0278	-.6479	-.5476	1.8960	.8957	.8958	26.79
.02	1.2240	-.6190	-.4526	.8225	.1784	-.1562	1.2273	-.6256	-.4551	1.8926	.8927	.8928	26.71
2.12	1.4402	-.5697	-.3442	1.0087	.2133	-.0472	1.4432	-.5750	-.3462	1.8940	.8939	.8940	26.74
4.05	1.6158	-.5262	-.2450	1.1621	.2390	.0498	1.6212	-.5353	-.2486	1.8889	.8894	.8896	26.62
6.00	1.7884	-.4675	-.1528	1.3115	.2801	.1407	1.7956	-.4788	-.1572	1.8855	.8865	.8867	26.53
8.09	2.0127	-.3704	-.0362	1.5102	.3584	.2565	2.0212	-.3828	-.0412	1.8838	.8850	.8852	26.49
10.03	2.1814	-.2829	.0469	1.6529	.4295	.3405	2.1893	-.2935	.0425	1.8860	.8868	.8871	26.55
12.00	2.3780	-.1898	.1549	1.8130	.5105	.4547	2.3781	-.1900	.1548	1.9006	.8998	.8998	26.90
14.01	2.5617	-.0683	.2538	1.9849	.6056	.5525	2.5702	-.0783	.2545	1.8861	.8868	.8871	26.55
16.03	2.7300	.0713	.3596	2.1321	.7236	.6522	2.7404	.0599	.3545	1.8833	.8845	.8848	26.48
18.03	2.9116	.2025	.4601	2.2796	.8381	.7582	2.9142	.1998	.4589	1.8966	.8963	.8964	26.80
20.02	3.0490	.3447	.5581	2.3997	.9565	.8542	3.0548	.3392	.5554	1.8917	.8920	.8921	26.69
22.02	3.1583	.4853	.6762	2.4915	1.0729	.9706	3.1669	.4777	.6724	1.8879	.8886	.8888	26.59
24.02	3.1927	.6168	.7650	2.5058	1.1807	1.0594	3.2016	.6095	.7611	1.8878	.8885	.8887	26.59

TABLE 5.- CONTINUED.

VED-WING 1/10-SCALE RESEARCH MODEL,VSTOL TEST NO. 204

ALPHA	CL	CD	CPM	CLE2	CDE2	CME2	CLCT	CDCT	CMCT	NPR	CT	CTRF	THETAJ
RUN = 244													
-.03	1.4751	-1.1077	-.6690	.7499	.1841	-.1560	1.4837	-1.1229	-.6750	2.5723	1.4825	1.4814	29.34
2.06	1.7374	-.9663	-.5306	.9656	.2982	-.0176	1.7465	-.9812	-.5366	2.5724	1.4826	1.4815	29.34
4.02	1.9128	-.9961	-.4519	1.0987	.2394	.0607	1.9234	-1.0122	-.4586	2.5704	1.4808	1.4797	29.36
6.11	2.1490	-.9143	-.3311	1.2901	.2919	.1817	2.1596	-.9290	-.3374	2.5717	1.4819	1.4807	29.35
8.07	2.3257	-.7876	-.2519	1.4255	.3867	.2611	2.3373	-.8028	-.2586	2.5670	1.4808	1.4796	29.40
10.03	2.5280	-.7081	-.1546	1.5869	.4372	.3592	2.5385	-.7208	-.1603	2.5687	1.4836	1.4824	29.38
11.98	2.7077	-.6110	-.0459	1.7286	.5009	.4677	2.7191	-.6240	-.0519	2.5677	1.4827	1.4815	29.39
14.04	2.8931	-.4399	.0467	1.8742	.6368	.5605	2.9044	-.4518	.0410	2.5687	1.4836	1.4824	29.38
16.04	3.1071	-.3071	.1526	2.0517	.7328	.6663	3.1193	-.3191	.1467	2.5681	1.4829	1.4817	29.39
18.04	3.2755	-.1659	.2406	2.1863	.8334	.7535	3.2907	-.1798	.2335	2.5642	1.4794	1.4782	29.43
19.99	3.4455	-.0017	.3540	2.3212	.9625	.8675	3.4589	-.0132	.3478	2.5676	1.4823	1.4811	29.39
22.04	3.5620	.1398	.4558	2.4000	1.0669	.9710	3.5716	.1321	.4515	2.5687	1.4876	1.4865	29.38
24.04	3.6518	.3062	.5698	2.4642	1.1879	1.0823	3.6676	.2944	.5629	2.5698	1.4802	1.4791	29.37
RUN = 245													
-3.73	1.1960	-1.6275	-.9227	.4860	.2479	-.3160	1.2026	-1.6449	-.9283	3.1377	1.9816	2.0053	24.47
-2.00	1.3876	-1.5927	-.8425	.6230	.2561	-.2371	1.3965	-1.6142	-.8495	3.1372	1.9771	2.0007	24.47
.02	1.6216	-1.5500	-.7407	.7927	.2693	-.1355	1.6317	-1.5722	-.7481	3.1345	1.9759	1.9992	24.48
2.00	1.8209	-1.5067	-.6542	.9276	.2875	-.0477	1.8296	-1.5241	-.6601	3.1363	1.9808	2.0043	24.47
4.03	2.0615	-1.4417	-.5449	1.1070	.3161	.0604	2.0727	-1.4625	-.5520	3.1368	1.9767	2.0003	24.47
6.01	2.2518	-1.3629	-.4582	1.2405	.3557	.1452	2.2669	-1.3886	-.4672	3.1368	1.9706	1.9940	24.47
8.04	2.5001	-1.2683	-.3513	1.4251	.4183	.2539	2.5129	-1.2883	-.3585	3.1370	1.9765	2.0001	24.47
9.99	2.7416	-1.1625	-.2294	1.6108	.4842	.3754	2.7563	-1.1839	-.2372	3.1333	1.9744	1.9976	24.48
12.04	2.9399	-1.0209	-.1293	1.7513	.5849	.4754	2.9553	-1.0418	-.1371	3.1360	1.9744	1.9978	24.47
13.98	3.1331	-.8901	-.0423	1.8878	.6790	.5636	3.1461	-.9064	-.0486	3.1402	1.9794	2.0032	24.46
15.99	3.3555	-.7281	.0648	2.0568	.7943	.6704	3.3702	-.7453	.0580	3.1360	1.9776	2.0011	24.47
18.01	3.5696	-.5754	.1554	2.2170	.9014	.7616	3.5838	-.5910	.1491	3.1354	1.9792	2.0027	24.48
20.02	3.7572	-.3946	.2605	2.3555	1.0316	.8659	3.7739	-.4116	.2533	3.1337	1.9763	1.9997	24.48
22.04	3.9013	-.2246	.3773	2.4480	1.1535	.9835	3.9164	-.2389	.3710	3.1343	1.9794	2.0028	24.48
23.98	3.9297	-.0816	.4666	2.4311	1.2460	1.0727	3.9458	-.0959	.4601	3.1340	1.9788	2.0021	24.48
RUN = 246													
8.02	1.2928	.2492	.2714	1.2928	.2492	.2714	1.2928	.2492	.2714	1.0000	0.0000	0.0000	0.00
8.01	1.3400	.1681	.2286	1.2881	.2542	.2599	1.3401	.1678	.2285	1.0405	.0997	.1005	23.06
8.04	1.4963	.0899	.1734	1.3918	.2633	.2334	1.4965	.0896	.1733	1.1429	.1997	.2025	23.03
8.07	1.6661	-.0602	.1273	1.4769	.2844	.2386	1.6716	-.0701	.1241	1.3410	.3888	.3931	20.71
8.01	1.9146	-.3138	.0018	1.4982	.3548	.2481	1.9219	-.3256	-.0025	1.7763	.7862	.7877	23.90
8.00	2.2176	-.5400	-.1919	1.4551	.3662	.2384	2.2258	-.5498	-.1966	2.2339	1.1872	1.1843	32.08
8.00	2.3853	-.8818	-.2924	1.4496	.4009	.2418	2.3933	-.8928	-.2970	2.6886	1.5863	1.5877	28.11
8.00	2.5274	-1.2656	-.3611	1.4563	.4140	.2429	2.4896	-1.2063	-.3398	3.1225	1.9695	1.9921	24.53
8.00	3.1293	-2.2147	-.7520	1.4183	.5534	.2165	3.0953	-2.1597	-.7328	3.5495	3.1628	3.2542	23.73
7.98	3.9562	-3.4409	-1.2614	1.4065	.6826	.1816	3.9472	-3.4264	-1.2564	3.5286	4.7166	4.8481	23.75

TABLE 5.- CONTINUED.

VEO-WING 1/10-SCALE RESEARCH MODEL,VSTOL TEST NO. 204

ALPHA	CL	CD	CPM	CLE2	CDE2	CME2	CLCT	CDCT	CMCT	NPR	CT	CTRF	THETAJ
RUN = 248													
-3.78	.3882	-.4224	-.3557	.2898	.0692	-.2399	.3903	-.4327	-.3581	1.4489	.4897	.5013	15.10
-1.97	.5514	-.4261	-.2737	.4362	.0703	-.1562	.5519	-.4282	-.2742	1.4567	.4978	.5096	15.03
.03	.6723	-.4031	-.2202	.5404	.0866	-.1032	.6735	-.4076	-.2212	1.4546	.4954	.5071	15.05
2.04	.8874	-.3796	-.1062	.7383	.1055	.0108	.8886	-.3838	-.1072	1.4546	.4958	.5075	15.05
4.04	1.0503	-.3469	-.0150	.8841	.1339	.1023	1.0513	-.3498	-.0157	1.4554	.4970	.5087	15.04
6.03	1.2465	-.2990	.0935	1.0643	.1737	.2104	1.2484	-.3039	.0923	1.4538	.4949	.5066	15.06
8.02	1.4380	-.2421	.1901	1.2391	.2254	.3072	1.4395	-.2456	.1893	1.4560	.4963	.5080	15.03
10.01	1.5963	-.1734	.2764	1.3815	.2861	.3934	1.5982	-.1775	.2754	1.4552	.4955	.5072	15.04
11.99	1.7861	-.0812	.3910	1.5562	.3692	.5076	1.7889	-.0866	.3896	1.4547	.4940	.5057	15.05
14.00	1.9535	.0157	.4945	1.7081	.4574	.6110	1.9567	.0099	.4930	1.4538	.4936	.5053	15.06
15.99	2.1201	.1249	.5959	1.8589	.5589	.7127	2.1229	.1204	.5947	1.4536	.4948	.5065	15.06
18.00	2.2721	.2423	.6901	1.9955	.6675	.8070	2.2746	.2384	.6890	1.4545	.4955	.5072	15.05
20.03	2.4223	.3728	.7965	2.1313	.7870	.9132	2.4255	.3682	.7952	1.4542	.4945	.5062	15.05
22.04	2.5502	.4889	.9086	2.2439	.8940	1.0257	2.5525	.4857	.9077	1.4549	.4962	.5079	15.04
24.04	2.6460	.6174	.9943	2.3260	1.0113	1.1113	2.6487	.6140	.9932	1.4537	.4957	.5074	15.06
RUN = 249													
-3.73	.5160	-.7075	-.5041	.3124	.1723	-.2888	.5191	-.7212	-.5074	1.8886	.8862	.9030	16.76
-2.00	.6881	-.7021	-.4246	.4574	.1737	-.2086	.6910	-.7131	-.4273	1.8888	.8888	.9056	16.76
.02	.9130	-.6850	-.3134	.6513	.1822	-.0974	.9162	-.6957	-.3161	1.8890	.8890	.9058	16.77
2.00	1.0858	-.6615	-.2261	.7941	.1978	-.0098	1.0888	-.6706	-.2284	1.8881	.8906	.9074	16.75
4.02	1.2739	-.6210	-.1278	.9535	.2245	.0876	1.2784	-.6331	-.1309	1.8875	.8873	.9041	16.74
6.00	1.4529	-.5729	-.0348	1.1027	.2619	.1810	1.4574	-.5838	-.0376	1.8885	.8885	.9053	16.76
8.00	1.6784	-.5051	.0780	1.3000	.3153	.2934	1.6840	-.5174	.0748	1.8885	.8866	.9034	16.76
9.98	1.8664	-.4277	.1740	1.4598	.3789	.3894	1.8726	-.4400	.1707	1.8893	.8865	.9033	16.77
12.04	2.0651	-.3321	.2869	1.6303	.4595	.5021	2.0718	-.3443	.2836	1.8877	.8863	.9031	16.74
14.03	2.2436	-.2276	.3880	1.7810	.5491	.6035	2.2503	-.2388	.3849	1.8877	.8872	.9040	16.74
16.03	2.4237	-.1030	.4939	1.9355	.6557	.7089	2.4317	-.1155	.4904	1.8871	.8855	.9023	16.73
18.04	2.6027	.0254	.5873	2.0866	.7690	.8029	2.6095	.0156	.5844	1.8869	.8883	.9051	16.73
20.04	2.7674	.1661	.6920	2.2259	.8906	.9075	2.7749	.1560	.6890	1.8874	.8876	.9044	16.74
22.03	2.9231	.3167	.8091	2.3573	1.0211	1.0244	2.9316	.3061	.8059	1.8877	.8867	.9035	16.74
24.02	3.0272	.4643	.8835	2.4371	1.1493	1.0989	3.0356	.4545	.8804	1.8871	.8873	.9041	16.73

TABLE 5.- CONTINUED.

VEO-WING 1/10-SCALE RESEARCH MODEL, VSTOL TEST NO. 204

ALPHA	CL	CD	CPM	CLE2	CDE2	CME2	CLCT	CDCT	CMCT	NPR	CT	CTRF	THETAJ
RUN = 250													
-3.69	.6308	-1.2857	-.6891	.2397	.1553	-.2922	.6859	-1.3022	-.6936	2.5744	1.4830	1.5070	20.71
-1.99	.8528	-1.2670	-.6175	.3691	.1597	-.2208	.8586	-1.2838	-.6222	2.5728	1.4825	1.5065	20.72
.04	1.1038	-1.2332	-.4984	.5711	.1723	-.1026	1.1113	-1.2531	-.5040	2.5713	1.4791	1.5030	20.72
2.00	1.3017	-1.2061	-.4155	.7170	.1909	-.0166	1.3054	-1.2151	-.4181	2.5803	1.4904	1.5145	20.71
4.02	1.5325	-1.1542	-.2965	.9009	.2164	.1010	1.5388	-1.1679	-.3004	2.5732	1.4851	1.5091	20.72
6.01	1.7483	-1.0936	-.1936	1.0695	.2549	.2040	1.7549	-1.1065	-.1974	2.5729	1.4857	1.5097	20.72
8.03	1.9817	-1.0175	-.0885	1.2551	.3072	.3094	1.9881	-1.0292	-.0921	2.5734	1.4868	1.5108	20.72
10.02	2.1366	-.9227	.0110	1.4160	.3732	.4080	2.1951	-.9369	.0066	2.5734	1.4837	1.5076	20.72
12.05	2.4038	-.8124	.1227	1.5883	.4550	.5197	2.4130	-.8268	.1182	2.5752	1.4831	1.5071	20.71
14.00	2.5924	-.6990	.2238	1.7337	.5404	.6209	2.6018	-.7125	.2195	2.5725	1.4839	1.5078	20.72
16.02	2.8003	-.5579	.3328	1.8985	.6503	.7299	2.8102	-.5712	.3284	2.5740	1.4837	1.5076	20.71
18.03	2.9887	-.4077	.4214	2.0460	.7671	.8181	2.9999	-.4217	.4167	2.5718	1.4823	1.5063	20.72
20.02	3.1712	-.2540	.5223	2.1866	.8894	.9197	3.1812	-.2656	.5182	2.5734	1.4850	1.5090	20.72
22.02	3.3342	-.0813	.6331	2.3095	1.0280	1.0308	3.3438	-.0917	.6294	2.5750	1.4861	1.5101	20.71
24.01	3.4592	.0852	.7177	2.3997	1.1551	1.1143	3.4722	.0720	.7128	2.5750	1.4818	1.5057	20.71
RUN = 251													
-3.68	.8218	-1.7426	-.7959	.2707	.2078	-.2784	.8251	-1.7543	-.7990	3.1444	1.9881	2.0268	19.46
-1.98	1.0401	-1.7236	-.7020	.4324	.2067	-.1853	1.0447	-1.7381	-.7058	3.1429	1.9851	2.0237	19.46
.01	1.2181	-1.6898	-.6414	.5441	.2170	-.1252	1.2236	-1.7053	-.6456	3.1404	1.9838	2.0224	19.46
2.03	1.4705	-1.6477	-.5243	.7299	.2346	-.0083	1.4764	-1.6626	-.5284	3.1365	1.9843	2.0227	19.45
4.01	1.6799	-1.5945	-.4268	.8790	.2521	.0863	1.6902	-1.6182	-.4334	3.1295	1.9747	2.0128	19.44
5.98	1.9228	-1.5208	-.3127	1.0642	.2878	.1969	1.8947	-1.4615	-.2960	3.1181	1.9643	2.0021	19.41
8.00	2.1378	-1.4407	-.2250	1.2153	.3385	.2850	2.1067	-1.3807	-.2078	3.1167	1.9664	2.0041	19.41
10.00	2.3790	-1.3363	-.1090	1.3990	.4029	.3987	2.3496	-1.2841	-.0938	3.1119	1.9588	1.9963	19.40
12.03	2.6091	-1.2444	-.0073	1.5527	.4802	.5090	2.6177	-1.2585	-.0115	3.1425	1.9838	2.0224	19.46
14.00	2.8072	-1.1227	.0859	1.6912	.5661	.6027	2.8153	-1.1350	.0822	3.1436	1.9856	2.0242	19.46
15.98	3.0260	-.9764	.1996	1.8541	.6704	.7155	3.0362	-.9908	.1951	3.1411	1.9827	2.0213	19.46
18.01	3.2050	-.8207	.2782	1.9780	.7801	.7930	3.2183	-.8382	.2726	3.1414	1.9785	2.0169	19.46
19.99	3.4212	-.6541	.3949	2.1379	.9053	.9103	3.4335	-.6691	.3899	3.1411	1.9810	2.0195	19.46
22.03	3.6013	-.4830	.5080	2.2600	1.0337	1.0248	3.6106	-.4936	.5044	3.1409	1.9861	2.0247	19.46
24.03	3.7374	-.3109	.6059	2.3446	1.1573	1.1226	3.7478	-.3220	.6020	3.1433	1.9851	2.0237	19.46
RUN = 252													
8.01	1.1070	.2024	.3075	1.1070	.2024	.3075	1.1070	.2024	.3075	1.0000	0.0000	0.0000	0.00
8.02	1.1691	.0920	.2712	1.1131	.2057	.3008	1.1583	.1138	.2769	1.0651	.1238	.1268	18.23
8.01	1.2779	.0123	.2496	1.1908	.2013	.2989	1.2767	.0150	.2503	1.1462	.2029	.2081	16.74
8.03	1.4038	-.1545	.1873	1.2372	.2181	.2833	1.4045	-.1561	.1869	1.3516	.3982	.4081	16.06
8.04	1.6012	-.4498	.0853	1.2790	.2970	.2723	1.6022	-.4522	.0847	1.7915	.7975	.8133	15.29
8.07	1.8858	-.7353	-.0097	1.3019	.3179	.3049	1.8935	-.7491	-.0139	2.2343	1.1844	1.2042	20.94
7.98	1.9831	-1.1121	-.1414	1.2104	.3197	.2843	1.9828	-1.1116	-.1413	2.7146	1.6007	1.6270	20.37
7.99	2.1476	-1.4370	-.2274	1.2217	.3467	.2850	2.1609	-1.4627	-.2348	3.1314	1.9716	2.0097	19.44
8.00	2.6167	-2.4264	-.4918	1.1967	.4453	.2996	2.6045	-2.4018	-.4850	3.5205	3.1268	3.2036	18.31
8.02	3.3452	-3.7149	-.8898	1.2133	.5644	.2975	3.3141	-3.6524	-.8724	3.4948	4.6683	4.7810	18.46

TABLE 5.- CONTINUED.

VEO-WING 1/10-SCALE RESEARCH MODEL,VSTOL TEST NO. 204

ALPHA	CL	CD	CPM	CLE2	CDE2	CME2	CLCT	CDCT	CMCT	NPR	CT	CTRF	THETAJ
RUN = 253													
-3.80	.1247	.0356	-.2554	.1247	.0356	-.2554	.1247	.0356	-.2554	1.0009	0.0000	0.0000	0.00
-1.99	.2909	.0355	-.1607	.2909	.0355	-.1607	.2909	.0355	-.1607	1.0009	0.0000	0.0000	0.00
.01	.4450	.0426	-.0608	.4450	.0426	-.0608	.4450	.0426	-.0608	1.0017	0.0000	0.0000	0.00
2.03	.5921	.0586	.0265	.5921	.0586	.0265	.5921	.0586	.0265	1.0009	0.0000	0.0000	0.00
4.02	.7634	.0839	.1312	.7634	.0839	.1312	.7634	.0839	.1312	1.0000	0.0000	0.0000	0.00
6.01	.9059	.1184	.2189	.9059	.1184	.2189	.9059	.1184	.2189	1.0000	0.0000	0.0000	0.00
8.03	1.1280	.1695	.3458	1.1280	.1695	.3458	1.1280	.1695	.3458	1.0000	0.0000	0.0000	0.00
10.00	1.2577	.2260	.4257	1.2577	.2260	.4257	1.2577	.2260	.4257	1.0000	0.0000	0.0000	0.00
12.02	1.4332	.3090	.5345	1.4332	.3090	.5345	1.4332	.3090	.5345	1.0000	0.0000	0.0000	0.00
14.02	1.5645	.3874	.6230	1.5645	.3874	.6230	1.5645	.3874	.6230	1.0000	0.0000	0.0000	0.00
16.02	1.7100	.4809	.7395	1.7100	.4809	.7395	1.7100	.4809	.7395	1.0000	0.0000	0.0000	0.00
15.99	1.6998	.4779	.7310	1.6998	.4779	.7310	1.6998	.4779	.7310	1.0000	0.0000	0.0000	0.00
17.97	1.8000	.5666	.8281	1.8000	.5666	.8281	1.8000	.5666	.8281	1.0003	0.0000	0.0000	0.00
20.00	1.9055	.6649	.9380	1.9055	.6649	.9380	1.9055	.6649	.9380	1.0000	0.0000	0.0000	0.00
22.05	1.9961	.7702	1.0440	1.9961	.7702	1.0440	1.9961	.7702	1.0440	1.0000	0.0000	0.0000	0.00
24.04	2.0917	.8894	1.1381	2.0917	.8894	1.1381	2.0917	.8894	1.1381	1.0000	0.0000	0.0000	0.00
RUN = 254													
-3.89	-.1418	.0320	-.1788	-.1418	.0320	-.1788	-.1418	.0320	-.1788	1.0049	0.0000	0.0000	0.00
-1.99	-.0267	.0243	-.1140	-.0267	.0243	-.1140	-.0267	.0243	-.1140	1.0044	0.0000	0.0000	0.00
.00	.1361	.0225	-.0239	.1361	.0225	-.0239	.1361	.0225	-.0239	1.0052	0.0000	0.0000	0.00
2.01	.3084	.0305	.0818	.3084	.0305	.0818	.3084	.0305	.0818	1.0056	0.0000	0.0000	0.00
4.01	.4805	.0482	.1886	.4805	.0482	.1886	.4805	.0482	.1886	1.0039	0.0000	0.0000	0.00
6.02	.6499	.0727	.2983	.6499	.0727	.2983	.6499	.0727	.2983	1.0037	0.0000	0.0000	0.00
8.02	.7990	.1079	.3883	.7990	.1079	.3883	.7990	.1079	.3883	1.0033	0.0000	0.0000	0.00
10.01	.9797	.1572	.4853	.9797	.1572	.4853	.9797	.1572	.4853	1.0039	0.0000	0.0000	0.00
12.04	1.1728	.2261	.5853	1.1728	.2261	.5853	1.1728	.2261	.5853	1.0031	0.0000	0.0000	0.00
13.99	1.3404	.2987	.6817	1.3404	.2987	.6817	1.3404	.2987	.6817	1.0035	0.0000	0.0000	0.00
15.99	1.4622	.3787	.7627	1.4622	.3787	.7627	1.4622	.3787	.7627	1.0031	0.0000	0.0000	0.00
18.03	1.5724	.4653	.8531	1.5724	.4653	.8531	1.5724	.4653	.8531	1.0027	0.0000	0.0000	0.00
19.98	1.6876	.5588	.9515	1.6876	.5588	.9515	1.6876	.5588	.9515	1.0024	0.0000	0.0000	0.00
22.03	1.7990	.6644	1.0548	1.7990	.6644	1.0548	1.7990	.6644	1.0548	1.0020	0.0000	0.0000	0.00
23.99	1.8840	.7663	1.1306	1.8840	.7663	1.1306	1.8840	.7663	1.1306	1.0002	0.0000	0.0000	0.00

TABLE 5.- CONTINUED.

VEO-WING 1/10-SCALE RESEARCH MODEL,VSTOL TEST NO. 204

ALPHA	CL	CD	CPM	CLE2	CDE2	CME2	CLCT	CDCT	CMCT	NPR	CT	CTRF	THETAJ
RUN = 257													
-3.84	-.1630	.0364	-.1902	-.1630	.0364	-.1902	-.1630	.0364	-.1902	1.0040	0.0000	0.0000	0.00
-1.98	.0112	.0240	-.0886	.0112	.0240	-.0886	.0112	.0240	-.0886	1.0037	0.0000	0.0000	0.00
-.00	.1640	.0242	-.0011	.1640	.0242	-.0011	.1640	.0242	-.0011	1.0043	0.0000	0.0000	0.00
2.09	.3290	.0316	.0946	.3290	.0316	.0946	.3290	.0316	.0946	1.0044	0.0000	0.0000	0.00
4.02	.4860	.0464	.1967	.4860	.0464	.1967	.4860	.0464	.1967	1.0042	0.0000	0.0000	0.00
6.02	.6420	.0680	.3023	.6420	.0680	.3023	.6420	.0680	.3023	1.0048	0.0000	0.0000	0.00
8.06	.8502	.1076	.4158	.8502	.1076	.4158	.8502	.1076	.4158	1.0045	0.0000	0.0000	0.00
10.05	1.0113	.1544	.5041	1.0113	.1544	.5041	1.0113	.1544	.5041	1.0046	0.0000	0.0000	0.00
12.13	1.1822	.2208	.5891	1.1822	.2208	.5891	1.1822	.2208	.5891	1.0046	0.0000	0.0000	0.00
14.16	1.3364	.2922	.6804	1.3364	.2922	.6804	1.3364	.2922	.6804	1.0049	0.0000	0.0000	0.00
16.09	1.4739	.3713	.7760	1.4739	.3713	.7760	1.4739	.3713	.7760	1.0049	0.0000	0.0000	0.00
18.18	1.5957	.4620	.8756	1.5957	.4620	.8756	1.5957	.4620	.8756	1.0052	0.0000	0.0000	0.00
20.13	1.7050	.5530	.9733	1.7050	.5530	.9733	1.7050	.5530	.9733	1.0043	0.0000	0.0000	0.00
22.14	1.8008	.6493	1.0725	1.8008	.6493	1.0725	1.8008	.6493	1.0725	1.0037	0.0000	0.0000	0.00
24.16	1.9306	.7744	1.1787	1.9306	.7744	1.1787	1.9306	.7744	1.1787	1.0013	0.0000	0.0000	0.00
RUN = 259													
-3.82	-.1115	-.4735	-.2574	-.1408	.0370	-.1798	-.1115	-.4737	-.2574	1.4604	.4998	.5114	7.10
-2.07	.0499	-.4802	-.1820	.0051	.0284	-.1046	.0500	-.4812	-.1822	1.4596	.4990	.5106	7.10
-.02	.2195	-.4803	-.1016	.1564	.0271	-.0240	.2195	-.4806	-.1016	1.4593	.4997	.5113	7.10
2.03	.4263	-.4630	.0047	.3456	.0388	.0818	.4269	-.4663	.0042	1.4576	.4967	.5082	7.10
4.02	.6226	-.4425	.1082	.5243	.0574	.1855	.6230	-.4445	.1079	1.4587	.4979	.5095	7.10
6.05	.8260	-.4133	.2200	.7100	.0833	.2974	.8264	-.4149	.2198	1.4591	.4984	.5099	7.10
8.10	1.0090	-.3689	.3093	.8761	.1200	.3862	1.0103	-.3736	.3086	1.4580	.4952	.5067	7.10
10.03	1.2063	-.3174	.4018	1.0558	.1707	.4793	1.2065	-.3182	.4017	1.4586	.4992	.5107	7.10
12.10	1.4086	-.2424	.4975	1.2411	.2383	.5747	1.4094	-.2448	.4971	1.4579	.4975	.5090	7.10
14.07	1.5923	-.1622	.5956	1.4078	.3142	.6731	1.5926	-.1628	.5955	1.4592	.4993	.5109	7.10
16.13	1.7794	-.0597	.6894	1.5781	.4090	.7668	1.7800	-.0611	.6892	1.4578	.4986	.5101	7.10
18.18	1.9614	.0575	.7748	1.7438	.5182	.8521	1.9623	.0556	.7745	1.4592	.4979	.5095	7.10
20.16	2.1178	.1735	.8713	1.8843	.6265	.9486	2.1187	.1717	.8710	1.4581	.4981	.5096	7.10
22.17	2.2758	.2994	.9784	2.0261	.7448	1.0558	2.2763	.2985	.9782	1.4588	.4990	.5105	7.10
24.20	2.4067	.4340	1.0784	2.1424	.8686	1.1555	2.4082	.4315	1.0779	1.4585	.4972	.5087	7.10

TABLE 5.- CONTINUED.

VEO-WING 1/10-SCALE RESEARCH MODEL, VSTOL TEST NO. 204

ALPHA	CL	CD	CPM	CLE2	CDE2	CME2	CLCT	CDCT	CMCT	NPR	CT	CTRF	THETAJ
RUN = 260													
-3.80	-.0580	-.8335	-.3039	-.1108	.0718	-.1838	-.0576	-.8403	-.3048	1.8940	.8933	.9069	7.13
-2.01	.1342	-.8423	-.2105	.0530	.0627	-.0902	.1347	-.8473	-.2111	1.8955	.8950	.9086	7.13
-.02	.3250	-.8349	-.1363	.2127	.0647	-.0163	.3259	-.8420	-.1372	1.8960	.8930	.9066	7.13
2.00	.5005	-.8283	-.0483	.3568	.0656	.0715	.5018	-.8365	-.0494	1.8955	.8919	.9054	7.13
4.05	.7361	-.8025	.0659	.5606	.0851	.1857	.7378	-.8112	.0648	1.8957	.8913	.9049	7.13
6.02	.9594	-.7695	.1768	.7535	.1118	.2966	.9614	-.7780	.1757	1.8965	.8914	.9050	7.13
8.11	1.1624	-.7190	.2688	.9249	.1527	.3884	1.1651	-.7289	.2675	1.8959	.8899	.9034	7.13
10.06	1.4042	-.6533	.3684	1.1372	.2096	.4880	1.4073	-.6633	.3670	1.8966	.8897	.9032	7.13
12.15	1.6097	-.5757	.4576	1.3107	.2786	.5774	1.6125	-.5838	.4565	1.8956	.8916	.9051	7.13
13.98	1.7669	-.5003	.5263	1.4405	.3450	.6463	1.7696	-.5074	.5253	1.8948	.8925	.9061	7.13
16.10	2.0032	-.3783	.6440	1.6464	.4526	.7637	2.0069	-.3869	.6427	1.8949	.8907	.9043	7.13
18.17	2.1977	-.2574	.7329	1.8103	.5622	.8529	2.2008	-.2638	.7319	1.8951	.8930	.9066	7.13
20.14	2.3978	-.1188	.8312	1.9834	.6851	.9509	2.4020	-.1271	.8299	1.8943	.8908	.9044	7.13
22.14	2.5844	.0279	.9337	2.1415	.8179	1.0536	2.5883	.0209	.9326	1.8952	.8921	.9057	7.13
24.17	2.7398	.1806	1.0189	2.2689	.9549	1.1389	2.7437	.1742	1.0179	1.8938	.8926	.9062	7.13
RUN = 261													
-3.74	.0057	-1.4390	-.3829	-.0905	.0634	-.1818	.0061	-1.4445	-.3837	2.5898	1.4944	1.5054	7.41
-2.01	.1711	-1.4414	-.3192	.0298	.0564	-.1185	.1717	-1.4479	-.3201	2.5861	1.4935	1.5045	7.40
.05	.4110	-1.4334	-.2271	.2158	.0597	-.0262	.4117	-1.4386	-.2278	2.5876	1.4947	1.5057	7.40
2.06	.6744	-1.4244	-.1093	.4263	.0634	.0922	.6748	-1.4270	-.1096	2.5892	1.4974	1.5084	7.41
4.05	.8626	-1.3926	-.0344	.5641	.0816	.1663	.8640	-1.3994	-.0354	2.5879	1.4931	1.5041	7.40
6.08	1.0885	-1.3521	.0617	.7384	.1093	.2621	1.0905	-1.3602	.0606	2.5857	1.4917	1.5027	7.40
8.11	1.3107	-1.2968	.1517	.9087	.1521	.3524	1.3127	-1.3039	.1507	2.5872	1.4927	1.5037	7.40
10.14	1.5892	-1.2158	.2575	1.1375	.2124	.4575	1.5932	-1.2283	.2558	2.5890	1.4869	1.4979	7.41
12.05	1.8234	-1.1322	.3523	1.3294	.2810	.5522	1.8325	-1.1439	.3506	2.5857	1.4878	1.4987	7.40
14.10	2.0648	-1.0368	.4454	1.5134	.3635	.6461	2.0670	-1.0425	.4446	2.5845	1.4940	1.5050	7.39
16.15	2.2978	-.9102	.5471	1.6977	.4671	.7474	2.3013	-.9182	.5460	2.5841	1.4914	1.5024	7.39
18.09	2.4916	-.7863	.6164	1.8453	.5699	.8167	2.4954	-.7942	.6152	2.5837	1.4913	1.5023	7.39
20.13	2.7416	-.6250	.7295	2.0489	.7049	.9293	2.7470	-.6353	.7279	2.5832	1.4885	1.4995	7.39
22.19	2.9604	-.4597	.8230	2.2193	.8458	1.0281	2.9653	-.4683	.8266	2.5841	1.4902	1.5012	7.39
24.14	3.1241	-.3027	.9118	2.3388	.9776	1.1119	3.1289	-.3105	.9106	2.5820	1.4909	1.5019	7.38

TABLE 5.- CONTINUED.

VEO-WING 1/10-SCALE RESEARCH MODEL,VSTOL TEST NO. 204

ALPHA	CL	CD	CPM	CLE2	CDE2	CME2	CLCT	CDCT	CMCT	NPR	CT	CTRF	THETAJ
RUN = 262													
-3.76	.0253	-1.9595	-.4782	-.1025	.0652	-.1905	.0247	-1.9506	-.4770	3.1734	2.0088	2.0288	7.37
-2.04	.2137	-1.9559	-.4196	.0242	.0586	-.1318	.2133	-1.9522	-.4190	3.1654	2.0037	2.0234	7.42
.17	.5095	-1.9479	-.3041	.2416	.0609	-.0157	.5086	-1.9410	-.3031	3.1639	2.0070	2.0266	7.42
2.03	.7012	-1.9162	-.2357	.3702	.0608	.0504	.7036	-1.9309	-.2378	3.1554	1.9852	2.0045	7.47
4.06	.9567	-1.9028	-.1284	.5542	.0785	.1593	.9563	-1.9006	-.1281	3.1633	2.0022	2.0218	7.43
6.00	1.1891	-1.8535	-.0333	.7210	.1066	.2535	1.1901	-1.8577	-.0339	3.1631	1.9958	2.0153	7.43
8.02	1.4519	-1.8016	.0651	.9137	.1465	.3526	1.4515	-1.8002	.0653	3.1643	2.0015	2.0211	7.42
10.07	1.7326	-1.7161	.1697	1.1271	.2034	.4563	1.7347	-1.7226	.1687	3.1615	1.9932	2.0127	7.44
12.08	1.9835	-1.6251	.2620	1.3099	.2736	.5491	1.9852	-1.6297	.2613	3.1595	1.9951	2.0146	7.45
14.08	2.2412	-1.5254	.3641	1.4996	.3551	.6520	2.2405	-1.5236	.3643	3.1609	2.0019	2.0214	7.44
16.09	2.4830	-1.3907	.4606	1.6784	.4562	.7476	2.4849	-1.3952	.4599	3.1601	1.9951	2.0146	7.45
18.08	2.7210	-1.2524	.5485	1.8510	.5698	.8360	2.7211	-1.2527	.5484	3.1615	1.9997	2.0192	7.44
20.10	2.9515	-1.0890	.6470	2.0209	.6951	.9338	2.9549	-1.0955	.6459	3.1593	1.9928	2.0122	7.45
22.16	3.1970	-.9138	.7579	2.2012	.8372	1.0453	3.1995	-.9182	.7572	3.1572	1.9950	2.0144	7.46
24.14	3.3922	-.7422	.8491	2.3366	.9744	1.1363	3.3944	-.7458	.8485	3.1589	1.9958	2.0152	7.45
RUN = 263													
8.05	.8261	.1003	.3900	.8261	.1003	.3900	.8261	.1003	.3900	1.0041	0.0000	0.0000	0.00
8.05	.8254	.0348	.3948	.7994	.1326	.4090	.8251	.0360	.3950	1.0426	.1013	.1012	6.82
8.05	.8730	-.0859	.3572	.8181	.1057	.3846	.8742	-.0903	.3566	1.1392	.1955	.1993	7.93
8.05	.9624	-.2934	.3052	.8546	.1027	.3660	.9622	-.2927	.3053	1.3522	.4007	.4105	7.17
8.07	1.0989	-.6318	.2576	.8882	.1447	.3684	1.1014	-.6407	.2564	1.7826	.7909	.8046	7.11
8.09	1.2727	-.9850	.2163	.9600	.1689	.3659	1.2770	-1.0010	.2143	2.2338	1.1837	1.1956	7.07
8.07	1.3738	-1.3716	.1397	.9416	.1596	.3595	1.3794	-1.3913	.1369	2.6875	1.5797	1.5910	7.69
8.08	1.4652	-1.8001	.0824	.9266	.1600	.3690	1.4619	-1.7881	.0841	3.1897	2.0123	2.0327	7.28
7.99	1.6520	-2.8288	-.0569	.8622	.1854	.3643	1.6342	-2.7610	-.0475	3.4953	3.0690	3.1159	6.69
8.06	2.0982	-4.3913	-.2829	.8831	.2215	.3621	2.0993	-4.3954	-.2835	3.5208	4.6959	4.7702	6.70
RUN = 264													
-3.80	.1573	.0391	-.2328	.1573	.0391	-.2328	.1573	.0391	-.2328	1.0007	0.0000	0.0000	0.00
-2.07	.2923	.0383	-.1517	.2923	.0383	-.1517	.2923	.0383	-.1517	1.0012	0.0000	0.0000	0.00
-.01	.4171	.0465	-.0787	.4171	.0465	-.0787	.4171	.0465	-.0787	1.0005	0.0000	0.0000	0.00
2.02	.6055	.0585	.0332	.6055	.0585	.0332	.6055	.0585	.0332	1.0005	0.0000	0.0000	0.00
4.02	.7666	.0826	.1304	.7666	.0826	.1304	.7666	.0826	.1304	1.0000	0.0000	0.0000	0.00
6.03	.9647	.1182	.2502	.9647	.1182	.2502	.9647	.1182	.2502	1.0000	0.0000	0.0000	0.00
8.02	1.1214	.1646	.3364	1.1214	.1646	.3364	1.1214	.1646	.3364	1.0000	0.0000	0.0000	0.00
10.09	1.2879	.2247	.4307	1.2879	.2247	.4307	1.2879	.2247	.4307	1.0000	0.0000	0.0000	0.00
12.09	1.4539	.2980	.5321	1.4539	.2980	.5321	1.4539	.2980	.5321	1.0000	0.0000	0.0000	0.00
14.13	1.6044	.3796	.6304	1.6044	.3796	.6304	1.6044	.3796	.6304	1.0007	0.0000	0.0000	0.00
16.10	1.7238	.4659	.7296	1.7238	.4659	.7296	1.7238	.4659	.7296	1.0010	0.0000	0.0000	0.00
18.15	1.8250	.5561	.8245	1.8250	.5561	.8245	1.8250	.5561	.8245	1.0025	0.0000	0.0000	0.00
20.14	1.9308	.6542	.9388	1.9308	.6542	.9388	1.9308	.6542	.9388	1.0013	0.0000	0.0000	0.00
22.23	2.0260	.7618	1.0493	2.0260	.7618	1.0493	2.0260	.7618	1.0493	1.0007	0.0000	0.0000	0.00
24.18	2.1238	.8796	1.1471	2.1238	.8796	1.1471	2.1238	.8796	1.1471	1.0000	0.0000	0.0000	0.00

TABLE 5.- CONTINUED.

VEO-WING 1/10-SCALE RESEARCH MODEL, VSTOL TEST NO. 204

ALPHA	CL	CD	CPM	CLE2	CDE2	CME2	CLCT	CDCT	CMCT	NPR	CT	CTRF	THETAJ
RUN = 266													
-3.76	.3438	-.4446	-.3757	.2450	.0496	-.2595	.3454	-.4523	-.3775	1.4523	.4923	.5040	15.07
-2.01	.4937	-.4380	-.3056	.3803	.0492	-.1901	.4964	-.4493	-.3083	1.4484	.4886	.5002	15.11
-.01	.6771	-.4258	-.2156	.5463	.0593	-.0996	.6795	-.4349	-.2178	1.4493	.4907	.5023	15.10
1.92	.8728	-.4086	-.1146	.7241	.0795	.0030	.8732	-.4101	-.1150	1.4582	.4985	.5103	15.01
4.02	1.0496	-.3721	-.0173	.8835	.1093	.1000	1.0504	-.3746	-.0179	1.4579	.4975	.5092	15.02
6.00	1.2453	-.3278	.0869	1.0629	.1472	.2041	1.2464	-.3306	.0862	1.4588	.4970	.5087	15.01
8.05	1.4430	-.2696	.1801	1.2431	.1998	.2977	1.4436	-.2710	.1798	1.4580	.4984	.5102	15.01
10.10	1.6100	-.1989	.2800	1.3940	.2618	.3973	1.6112	-.2016	.2794	1.4584	.4971	.5088	15.01
12.10	1.8008	-.1125	.3856	1.5685	.3412	.5031	1.8017	-.1143	.3851	1.4578	.4980	.5098	15.02
14.17	1.9712	-.0159	.4890	1.7226	.4295	.6065	1.9721	-.0174	.4886	1.4591	.4983	.5101	15.00
16.07	2.1421	.0958	.5926	1.8792	.5318	.7099	2.1435	.0935	.5920	1.4578	.4973	.5091	15.02
18.15	2.2696	.2070	.6700	1.9909	.6334	.7874	2.2709	.2049	.6695	1.4577	.4976	.5093	15.02
20.15	2.4393	.3420	.7904	2.1463	.7580	.9077	2.4410	.3396	.7898	1.4578	.4972	.5089	15.02
22.16	2.5536	.4626	.8923	2.2444	.8705	1.0102	2.5536	.4626	.8923	1.4590	.5001	.5119	15.00
24.19	2.6690	.6032	1.0021	2.3466	.9987	1.1197	2.6700	.6021	1.0018	1.4592	.4985	.5103	15.00
RUN = 267													
-3.70	.4957	-.7864	-.5101	.2880	.0981	-.2926	.4977	-.7946	-.5121	1.8965	.8917	.9085	16.92
-1.99	.6898	-.7772	-.4178	.4566	.1005	-.2007	.6921	-.7858	-.4199	1.8939	.8913	.9081	16.87
.02	.8909	-.7566	-.3273	.6266	.1129	-.1100	.8932	-.7644	-.3293	1.8948	.8919	.9088	16.89
1.97	1.0647	-.7291	-.2430	.7722	.1293	-.0263	1.0680	-.7387	-.2454	1.8929	.8900	.9068	16.85
4.05	1.2884	-.6855	-.1262	.9657	.1606	.0900	1.2925	-.6963	-.1289	1.8918	.8887	.9055	16.83
6.00	1.4639	-.6337	-.0368	1.1132	.2003	.1792	1.4687	-.6450	-.0397	1.8911	.8880	.9047	16.81
8.02	1.6831	-.5630	.0691	1.3034	.2568	.2848	1.6888	-.5753	.0658	1.8919	.8868	.9035	16.83
10.11	1.9120	-.4855	.1770	1.4949	.3261	.3963	1.9140	-.4894	.1759	1.9043	.8956	.9125	17.09
12.08	2.0850	-.3967	.2727	1.6399	.4031	.4923	2.0858	-.3981	.2723	1.9008	.8984	.9153	17.01
14.11	2.2628	-.2861	.3733	1.7921	.4938	.5917	2.2659	-.2912	.3718	1.9001	.8941	.9109	17.00
16.12	2.4476	-.1592	.4808	1.9500	.6032	.6992	2.4512	-.1647	.4793	1.9006	.8936	.9104	17.01
18.12	2.6156	-.0321	.5612	2.0907	.7140	.7801	2.6183	-.0359	.5601	1.9006	.8955	.9123	17.01
20.16	2.7959	.1139	.6838	2.2442	.8422	.9029	2.7978	.1113	.6830	1.8997	.8969	.9138	16.99
22.20	2.9435	.2676	.7968	2.3670	.9743	1.0156	2.9467	.2638	.7956	1.9007	.8951	.9120	17.01
24.28	3.0560	.4218	.8852	2.4528	1.1089	1.1046	3.0577	.4199	.8846	1.9005	.8975	.9144	17.01

TABLE 5.- CONTINUED.

VEO-WING 1/10-SCALE RESEARCH MODEL, VSTOL TEST NO. 204

ALPHA	CL	CD	CPM	CLE2	CDE2	CME2	CLCT	CDCT	CMCT	NPR	CT	CTRF	THETAJ
RUN = 268													
-3.68	.6960	-1.3818	-.6785	.2498	.0772	-.2765	.6956	-1.3805	-.6781	2.5999	1.5014	1.5257	20.68
-2.02	.8907	-1.3611	-.5907	.4041	.0790	-.1903	.8921	-1.3651	-.5918	2.5916	1.4958	1.5200	20.69
.07	1.1116	-1.3288	-.5031	.5728	.0924	-.1026	1.1132	-1.3328	-.5042	2.5890	1.4958	1.5200	20.70
2.01	1.3244	-1.2993	-.4102	.7373	.1040	-.0095	1.3256	-1.3021	-.4111	2.5890	1.4970	1.5212	20.70
4.01	1.5476	-1.2477	-.3043	.9125	.1330	.0961	1.5495	-1.2518	-.3055	2.5925	1.4955	1.5197	20.69
6.05	1.7668	-1.1888	-.1975	1.0825	.1698	.2033	1.7682	-1.1916	-.1983	2.5936	1.4970	1.5212	20.69
8.03	2.0243	-1.1110	-.0856	1.2916	.2260	.3161	2.0241	-1.1107	-.0855	2.5919	1.5003	1.5246	20.69
10.10	2.2380	-1.0187	.0136	1.4582	.2903	.4150	2.2383	-1.0192	.0134	2.5941	1.4993	1.5236	20.69
12.11	2.4364	-.9065	.1171	1.6129	.3711	.5176	2.4387	-.9102	.1160	2.5923	1.4958	1.5200	20.69
14.12	2.6408	-.7872	.2193	1.7710	.4638	.6208	2.6411	-.7877	.2192	2.5929	1.4994	1.5237	20.69
16.12	2.8300	-.6494	.3195	1.9189	.5680	.7201	2.8322	-.6523	.3186	2.5917	1.4964	1.5206	20.69
18.17	3.0113	-.4902	.4119	2.0662	.6827	.8087	3.0226	-.5041	.4072	2.5874	1.4823	1.5063	20.70
20.22	3.2173	-.3343	.5242	2.2221	.8140	.9245	3.2204	-.3379	.5230	2.5896	1.4953	1.5195	20.69
22.21	3.3796	-.1709	.6323	2.3468	.9404	1.0320	3.3845	-.1761	.6304	2.5883	1.4929	1.5171	20.70
24.21	3.5045	.0003	.7292	2.4362	1.0721	1.1279	3.5122	-.0074	.7263	2.5866	1.4892	1.5133	20.70
RUN = 269													
-3.66	.7949	-1.8681	-.7927	.2475	.0689	-.2795	.8019	-1.8930	-.7993	3.1322	1.9746	2.0128	19.44
-1.89	.9872	-1.8456	-.7174	.3802	.0738	-.2042	.9949	-1.8700	-.7240	3.1317	1.9749	2.0131	19.44
-.01	1.2194	-1.8026	-.6228	.5541	.0836	-.1127	1.1984	-1.7429	-.6066	3.1334	1.9621	2.0001	19.44
4.02	1.6836	-1.7169	-.4238	.8854	.1218	.0874	1.6566	-1.6548	-.4065	3.1337	1.9664	2.0045	19.44
6.03	1.9401	-1.6602	-.3189	1.0713	.1619	.1967	1.9489	-1.6786	-.3241	3.1478	1.9800	2.0186	19.47
8.06	2.2037	-1.5805	-.2081	1.2680	.2150	.3090	2.2103	-1.5932	-.2117	3.1472	1.9859	2.0247	19.47
10.10	2.4334	-1.4817	-.1078	1.4329	.2816	.4100	2.4391	-1.4918	-.1108	3.1473	1.9885	2.0273	19.47
12.07	2.6661	-1.3661	.0064	1.6072	.3594	.5235	2.6737	-1.3785	.0027	3.1484	1.9858	2.0245	19.47
14.15	2.8437	-1.2367	.0853	1.7255	.4453	.6011	2.8544	-1.2527	.0804	3.1466	1.9811	2.0198	19.47
16.10	3.0694	-1.0875	.1972	1.8952	.5548	.7129	3.0811	-1.1039	.1921	3.1484	1.9803	2.0189	19.47
20.13	3.4680	-.7670	.3952	2.1805	.7899	.9111	3.4799	-.7814	.3904	3.1468	1.9817	2.0203	19.47
22.12	3.6411	-.6009	.5036	2.2973	.9134	1.0207	3.6507	-.6117	.5000	3.1473	1.9859	2.0246	19.47
24.14	3.8009	-.4169	.6032	2.4023	1.0515	1.1212	3.8086	-.4250	.6003	3.1493	1.9890	2.0278	19.47
18.16	3.2525	-.9350	.2658	2.0180	.6665	.7825	3.2629	-.9484	.2615	3.1519	1.9833	2.0221	19.47
12.12	2.6346	-1.3649	-.0247	1.5728	.3619	.4932	2.6409	-1.3751	-.0278	3.1508	1.9882	2.0271	19.47
4.02	1.6902	-1.7314	-.4363	.8819	.1279	.0818	1.6949	-1.7421	-.4393	3.1517	1.9886	2.0275	19.47

TABLE 5.- CONTINUED.

VEO-WING 1/10-SCALE RESEARCH MODEL, VSTOL TEST NO. 204

ALPHA	CL	CD	CPM	CLE2	CDE2	CME2	CLCT	CDCT	CMCT	NPR	CT	CTRF	THETAJ
RUN = 270													
8.06	1.1543	.1788	.3337	1.1543	.1788	.3337	1.1543	.1788	.3337	1.0000	0.0000	0.0000	0.00
8.04	1.1326	.1084	.2916	1.0848	.2037	.3163	1.1306	.1123	.2926	1.0454	.1042	.1066	18.59
8.07	1.2745	.0008	.2551	1.1874	.1892	.3042	1.2735	.0030	.2557	1.1459	.2024	.2076	16.74
8.04	1.3663	-.1828	.1733	1.1999	.1892	.2692	1.3672	-.1850	.1728	1.3516	.3977	.4076	16.06
8.06	1.6141	-.5007	.0962	1.2894	.2510	.2844	1.6129	-.4980	.0969	1.7918	.8029	.8189	15.30
8.06	1.8683	-.8332	-.0370	1.2703	.2459	.2855	1.8616	-.8211	-.0334	2.2654	1.2136	1.2337	20.93
8.07	2.0168	-1.1912	-.1269	1.2455	.2311	.2969	2.0208	-1.1986	-.1291	2.7072	1.5917	1.6179	20.40
8.07	2.1536	-1.5645	-.2363	1.2179	.2304	.2807	2.1605	-1.5776	-.2401	3.1475	1.9854	2.0242	19.47
8.10	2.6642	-2.6305	-.4904	1.2349	.2628	.3035	2.6424	-2.5864	-.4783	3.5536	3.1480	3.2271	18.19
8.03	3.4262	-4.0933	-.8954	1.2660	.2926	.3076	3.3948	-4.0295	-.8779	3.5520	4.7694	4.8890	18.19
RUN = 271													
-3.76	.2858	.0632	-.2769	.2858	.0632	-.2769	.2858	.0632	-.2769	1.0000	0.0000	0.0000	0.00
-2.04	.4337	.0664	-.1890	.4337	.0664	-.1890	.4337	.0664	-.1890	1.0000	0.0000	0.0000	0.00
.00	.5827	.0776	-.0949	.5827	.0776	-.0949	.5827	.0776	-.0949	1.0000	0.0000	0.0000	0.00
2.04	.7531	.0976	.0088	.7531	.0976	.0088	.7531	.0976	.0088	1.0000	0.0000	0.0000	0.00
4.07	.9436	.1284	.1050	.9436	.1284	.1050	.9436	.1284	.1050	1.0000	0.0000	0.0000	0.00
6.00	1.1103	.1690	.2026	1.1103	.1690	.2026	1.1103	.1690	.2026	1.0000	0.0000	0.0000	0.00
8.05	1.2730	.2242	.2933	1.2730	.2242	.2933	1.2730	.2242	.2933	1.0000	0.0000	0.0000	0.00
10.09	1.4585	.2925	.4017	1.4585	.2925	.4017	1.4585	.2925	.4017	1.0000	0.0000	0.0000	0.00
12.12	1.6300	.3714	.5102	1.6300	.3714	.5102	1.6300	.3714	.5102	1.0000	0.0000	0.0000	0.00
14.09	1.7363	.4463	.6176	1.7363	.4463	.6176	1.7363	.4463	.6176	1.0000	0.0000	0.0000	0.00
16.16	1.8516	.5386	.7127	1.8516	.5386	.7127	1.8516	.5386	.7127	1.0000	0.0000	0.0000	0.00
18.15	1.9621	.6331	.8166	1.9621	.6331	.8166	1.9621	.6331	.8166	1.0000	0.0000	0.0000	0.00
20.10	2.0615	.7331	.9193	2.0615	.7331	.9193	2.0615	.7331	.9193	1.0000	0.0000	0.0000	0.00
22.12	2.1519	.8445	1.0237	2.1519	.8445	1.0237	2.1519	.8445	1.0237	1.0000	0.0000	0.0000	0.00
24.19	2.2206	.9625	1.1196	2.2206	.9625	1.1196	2.2206	.9625	1.1196	1.0000	0.0000	0.0000	0.00
RUN = 273													
-3.78	.6060	-.3659	-.4404	.4741	.1057	-.3059	.6099	-.3801	-.4444	1.4459	.4854	.4896	19.40
-1.99	.7271	-.3467	-.3784	.5791	.1275	-.2422	.7293	-.3539	-.3804	1.4520	.4925	.4967	19.32
.03	.9318	-.3332	-.2743	.7671	.1357	-.1380	.9342	-.3400	-.2763	1.4518	.4928	.4970	19.32
1.98	1.1322	-.3093	-.1648	.9515	.1542	-.0285	1.1347	-.3157	-.1667	1.4521	.4932	.4974	19.32
3.99	1.2942	-.2635	-.0723	1.0975	.1933	.0640	1.2969	-.2698	-.0742	1.4530	.4931	.4973	19.31
5.99	1.4568	-.2105	.0163	1.2447	.2384	.1523	1.4602	-.2176	.0141	1.4532	.4923	.4965	19.30
8.04	1.7062	-.1414	.1487	1.4784	.2992	.2846	1.7100	-.1488	.1465	1.4530	.4918	.4960	19.31
10.02	1.8727	-.0740	.2458	1.6291	.3597	.3821	1.8761	-.0800	.2439	1.4534	.4932	.4974	19.30
12.03	2.0285	.0192	.3420	1.7703	.4430	.4780	2.0327	.0124	.3398	1.4525	.4920	.4962	19.31
14.06	2.2023	.1213	.4389	1.9294	.5358	.5749	2.2067	.1147	.4367	1.4529	.4921	.4963	19.31
16.06	2.3755	.2450	.5425	2.0877	.6502	.6788	2.3797	.2391	.5405	1.4516	.4928	.4970	19.32
18.05	2.5213	.3582	.6450	2.2191	.7538	.7815	2.5252	.3530	.6432	1.4522	.4936	.4978	19.32
20.07	2.6420	.4759	.7497	2.3262	.8606	.8861	2.6462	.4708	.7479	1.4522	.4935	.4977	19.32
22.05	2.7398	.6022	.8721	2.4107	.9758	1.0085	2.7441	.5974	.8703	1.4515	.4936	.4978	19.33
24.03	2.8095	.7229	.9625	2.4687	1.0837	1.0986	2.8150	.7171	.9603	1.4507	.4921	.4963	19.34

TABLE 5.- CONTINUED.

VEO-WING 1/10-SCALE RESEARCH MODEL, VSTOL TEST NO. 204

ALPHA	CL	CD	CPM	CLE2	CDE2	CME2	CLCT	CDCT	CMCT	NPR	CT	CTRF	THETAJ
RUN = 274													
-3.58	.8704	-.6351	-.6053	.5206	.1832	-.3097	.8743	-.6445	-.6086	1.8935	.8898	.8900	26.73
-2.00	1.0286	-.6177	-.5251	.6561	.1916	-.2292	1.0325	-.6261	-.5281	1.8932	.8907	.8909	26.72
-.00	1.2082	-.6004	-.4456	.8075	.1959	-.1495	1.2121	-.6082	-.4484	1.8929	.8914	.8915	26.71
2.03	1.4239	-.5567	-.3340	.9952	.2246	-.0381	1.4282	-.5646	-.3370	1.8933	.8910	.8911	26.72
4.01	1.6095	-.5064	-.2345	1.1531	.2608	.0620	1.6133	-.5128	-.2370	1.8940	.8925	.8926	26.74
6.04	1.8166	-.4336	-.1278	1.3347	.3156	.1680	1.8216	-.4415	-.1309	1.8926	.8907	.8908	26.70
8.04	2.0024	-.3616	-.0316	1.4952	.3687	.2638	2.0086	-.3706	-.0352	1.8941	.8890	.8891	26.74
10.02	2.1939	-.2763	.0770	1.6620	.4360	.3724	2.2006	-.2852	.0733	1.8939	.8889	.8890	26.74
12.07	2.3750	-.1799	.1863	1.8187	.5122	.4811	2.3826	-.1894	.1822	1.8932	.8878	.8879	26.72
14.04	2.5704	-.0486	.2787	1.9910	.6238	.5735	2.5786	-.0581	.2746	1.8930	.8875	.8876	26.72
16.05	2.7550	.0882	.3829	2.1523	.7400	.6777	2.7634	.0791	.3788	1.8927	.8876	.8878	26.71
18.04	2.9054	.2152	.4789	2.2818	.8449	.7731	2.9152	.2053	.4743	1.8919	.8861	.8862	26.69
20.03	3.0692	.3649	.5922	2.4210	.9750	.8878	3.0765	.3580	.5889	1.8924	.8900	.8902	26.70
22.05	3.1850	.5136	.7135	2.5172	1.0994	1.0084	3.1939	.5058	.7095	1.8922	.8882	.8883	26.70
24.05	3.2201	.6424	.8016	2.5322	1.2047	1.0966	3.2291	.6351	.7978	1.8921	.8884	.8885	26.69
RUN = 275													
-3.63	1.1119	-1.1603	-.8265	.4698	.1861	-.3123	1.1152	-1.1672	-.8291	2.5914	1.4925	1.4917	29.13
-2.02	1.2376	-1.1282	-.7477	.6089	.1883	-.2352	1.2957	-1.1440	-.7538	2.5764	1.4822	1.4812	29.30
-.01	1.5228	-1.0964	-.6344	.7963	.2015	-.1203	1.5284	-1.1065	-.6384	2.5806	1.4884	1.4874	29.25
2.01	1.6881	-1.0474	-.5629	.9174	.2202	-.0497	1.6962	-1.0606	-.5682	2.5765	1.4845	1.4835	29.29
4.02	1.9080	-.9657	-.4493	1.0947	.2729	.0630	1.9174	-.9802	-.4553	2.5788	1.4827	1.4817	29.27
6.03	2.1117	-.9221	-.3557	1.2531	.2907	.1581	2.1193	-.9327	-.3602	2.5787	1.4869	1.4859	29.27
8.02	2.3547	-.8097	-.2354	1.4572	.3687	.2768	2.3654	-.8238	-.2416	2.5786	1.4823	1.4813	29.27
10.02	2.5294	-.7391	-.1434	1.5909	.4075	.3670	2.5403	-.7525	-.1514	2.5780	1.4827	1.4817	29.28
12.07	2.7308	-.6002	-.0210	1.7505	.5140	.4922	2.7406	-.6114	-.0261	2.5789	1.4851	1.4841	29.27
14.08	2.9493	-.4317	.0759	1.9281	.6514	.5902	2.9565	-.4393	.0723	2.5823	1.4895	1.4886	29.23
16.06	3.1384	-.2988	.1765	2.0814	.7460	.6904	3.1475	-.3078	.1721	2.5784	1.4872	1.4862	29.27
18.07	3.2926	-.1563	.2588	2.2055	.8460	.7699	3.3076	-.1701	.2517	2.5797	1.4796	1.4787	29.26
20.07	3.4881	.0070	.3848	2.3629	.9738	.8976	3.4999	-.0031	.3794	2.5797	1.4845	1.4835	29.26
22.05	3.6029	.1303	.4679	2.4415	1.0611	.9821	3.6112	.1236	.4642	2.5817	1.4894	1.4884	29.24
24.04	3.6839	.2877	.5888	2.4932	1.1761	1.1020	3.6947	.2796	.5841	2.5824	1.4865	1.4856	29.23

TABLE 5.- CONTINUED.

VEO-WING 1/10-SCALE RESEARCH MODEL, VSTOL TEST NO. 204

ALPHA	CL	CD	CPM	CLE2	CDE2	CME2	CLCT	CDCT	CMCT	NPR	CT	CTRF	THETAJ
RUN = 276													
-3.61	1.1997	-1.7032	-.9276	.4933	.1412	-.3281	1.1804	-1.6530	-.9113	3.1146	1.9532	1.9750	24.56
-2.03	1.3538	-1.6755	-.8707	.5956	.1522	-.2701	1.3318	-1.6225	-.8532	3.1158	1.9568	1.9787	24.56
.02	1.6015	-1.6379	-.7617	.7770	.1692	-.1598	1.5748	-1.5794	-.7422	3.1270	1.9636	1.9863	24.51
2.00	1.8276	-1.5890	-.6676	.9384	.1938	-.0640	1.7962	-1.5262	-.6463	3.1280	1.9694	1.9922	24.51
3.99	2.0546	-1.5124	-.5584	1.1051	.2372	.0446	2.0219	-1.4523	-.5376	3.1297	1.9676	1.9906	24.50
6.03	2.3172	-1.4182	-.4297	1.3113	.2886	.1701	2.2874	-1.3676	-.4120	3.1332	1.9581	1.9811	24.48
8.02	2.5377	-1.2952	-.3362	1.4672	.3855	.2668	2.5001	-1.2361	-.3150	3.1366	1.9693	1.9927	24.47
10.01	2.7063	-1.1631	-.2631	1.5746	.4835	.3419	2.7207	-1.1841	-.2708	3.1323	1.9748	1.9980	24.49
12.03	2.9394	-1.0644	-.1321	1.7548	.5351	.4706	2.8988	-1.0097	-.1115	3.1317	1.9673	1.9904	24.49
14.05	3.1526	-.9131	-.0358	1.9087	.6485	.5688	3.1694	-.9342	-.0439	3.1311	1.9733	1.9965	24.49
16.07	3.3615	-.7229	.0656	2.0665	.7905	.6687	3.3164	-.5701	.0866	3.1327	1.9686	1.9918	24.49
18.06	3.5538	-.5918	.1556	2.2099	.8730	.7573	3.5096	-.5436	.1754	3.1350	1.9646	1.9879	24.48
20.05	3.7488	-.4275	.2668	2.3495	.9952	.8707	3.7686	-.4476	.2583	3.1362	1.9721	1.9955	24.47
22.12	3.8860	-.2515	.3666	2.4292	1.1261	.9735	3.8995	-.2644	.3610	3.1345	1.9816	2.0050	24.48
24.08	3.9412	-.0932	.4792	2.4406	1.2323	1.0850	3.9575	-.1076	.4727	3.1380	1.9785	2.0022	24.46
RUN = 277													
8.01	1.2885	.2388	.2750	1.2885	.2388	.2750	1.2885	.2388	.2750	1.0000	0.0000	0.0000	0.00
8.02	1.3364	.1849	.2287	1.2835	.2726	.2607	1.3356	.1862	.2292	1.0429	.1015	.1024	23.03
8.04	1.4915	.1057	.1888	1.3897	.2746	.2474	1.4944	.1010	.1872	1.1379	.1945	.1972	23.04
8.06	1.6377	-.0614	.1294	1.4475	.2857	.2414	1.6418	-.0690	.1270	1.3450	.3915	.3958	20.66
8.08	1.8937	-.3251	.0136	1.4709	.3483	.2630	1.8970	-.3304	.0116	1.7821	.7937	.7951	24.04
8.03	2.2412	-.5486	-.1579	1.4822	.3515	.2700	2.2540	-.5637	-.1651	2.2254	1.1802	1.1773	32.11
8.03	2.3599	-.9313	-.2863	1.4260	.3579	.2463	2.3658	-.9394	-.2897	2.7103	1.5900	1.5919	27.39
8.04	2.5366	-1.2799	-.3498	1.4620	.4076	.2551	2.5493	-1.2998	-.3569	3.1427	1.9766	2.0006	24.45
8.03	3.1633	-2.2667	-.7247	1.4438	.5136	.2480	3.1773	-2.2893	-.7326	3.5691	3.1742	3.2690	23.70
8.02	4.0207	-3.5099	-1.2077	1.4617	.6229	.2392	4.0051	-3.4846	-1.1988	3.5290	4.7290	4.8610	23.75
RUN = 278													
-3.86	-.1668	.0295	-.1957	-.1668	.0295	-.1957	-.1668	.0295	-.1957	1.0054	0.0000	0.0000	0.00
-2.04	-.0202	.0172	-.1131	-.0202	.0172	-.1131	-.0202	.0172	-.1131	1.0054	0.0000	0.0000	0.00
-.04	.1391	.0154	-.0223	.1391	.0154	-.0223	.1391	.0154	-.0223	1.0047	0.0000	0.0000	0.00
1.97	.3138	.0205	.0839	.3138	.0205	.0839	.3138	.0205	.0839	1.0060	0.0000	0.0000	0.00
4.00	.4860	.0367	.1903	.4860	.0367	.1903	.4860	.0367	.1903	1.0053	0.0000	0.0000	0.00
6.03	.6634	.0606	.3044	.6634	.0606	.3044	.6634	.0606	.3044	1.0061	0.0000	0.0000	0.00
12.06	1.1868	.2059	.5892	1.1868	.2059	.5892	1.1868	.2059	.5892	1.0051	0.0000	0.0000	0.00
14.04	1.3454	.2821	.6818	1.3454	.2821	.6818	1.3454	.2821	.6818	1.0050	0.0000	0.0000	0.00
16.09	1.4833	.3711	.7738	1.4833	.3711	.7738	1.4833	.3711	.7738	1.0055	0.0000	0.0000	0.00
16.09	1.4823	.3704	.7734	1.4823	.3704	.7734	1.4823	.3704	.7734	1.0056	0.0000	0.0000	0.00
18.19	1.5983	.4564	.8654	1.5983	.4564	.8654	1.5983	.4564	.8654	1.0051	0.0000	0.0000	0.00
20.10	1.7115	.5496	.9662	1.7115	.5496	.9662	1.7115	.5496	.9662	1.0046	0.0000	0.0000	0.00
20.11	1.7134	.5499	.9671	1.7134	.5499	.9671	1.7134	.5499	.9671	1.0046	0.0000	0.0000	0.00
22.07	1.8249	.6512	1.0675	1.8249	.6512	1.0675	1.8249	.6512	1.0675	1.0034	0.0000	0.0000	0.00
24.11	1.9232	.7659	1.1550	1.9232	.7659	1.1550	1.9232	.7659	1.1550	1.0018	0.0000	0.0000	0.00

TABLE 5.- CONTINUED.

VEO-WING 1/10-SCALE RESEARCH MODEL, VSTOL TEST NO. 204

ALPHA	CL	CD	CPM	CLE2	CDE2	CME2	CLCT	CDCT	CMCT	NPR	CT	CTRF	THETAJ
RUN = 280													
-3.78	-.1104	-.4789	-.2688	-.1531	.0333	-.1819	-.1107	-.4753	-.2682	1.4406	.5036	.5139	8.55
-1.98	.0610	-.4865	-.1858	.0027	.0206	-.0996	.0610	-.4867	-.1858	1.4367	.4999	.5104	8.54
.06	.2587	-.4910	-.0980	.1812	.0207	-.0105	.2576	-.4836	-.0968	1.4443	.5073	.5175	8.56
2.02	.4210	-.4794	-.0118	.3264	.0272	.0753	.4200	-.4743	-.0110	1.4420	.5050	.5154	8.55
4.03	.6308	-.4538	.0970	.5196	.0447	.1832	.6307	-.4535	.0970	1.4384	.5003	.5108	8.54
6.06	.8291	-.4279	.2035	.6992	.0703	.2906	.8279	-.4232	.2043	1.4436	.5047	.5149	8.56
8.03	1.0233	-.3870	.2993	.8766	.1056	.3862	1.0222	-.3834	.2999	1.4425	.5037	.5139	8.55
10.07	1.2046	-.3340	.3878	1.0401	.1542	.4749	1.2030	-.3292	.3886	1.4432	.5050	.5152	8.56
12.02	1.4147	-.2627	.4908	1.2335	.2201	.5780	1.4128	-.2575	.4917	1.4429	.5054	.5157	8.55
14.05	1.6033	-.1747	.5836	1.4046	.3026	.6711	1.6006	-.1684	.5848	1.4435	.5068	.5170	8.56
16.09	1.7809	-.0738	.6863	1.5660	.3948	.7735	1.7787	-.0689	.6872	1.4430	.5053	.5156	8.56
18.03	1.9174	.0249	.7564	1.6860	.4873	.8439	1.9143	.0312	.7576	1.4440	.5069	.5171	8.56
20.00	2.1159	.1538	.8761	1.8698	.6061	.9632	2.1136	.1579	.8769	1.4425	.5046	.5149	8.55
22.04	2.2700	.2819	.9778	2.0074	.7260	1.0650	2.2671	.2868	.9787	1.4422	.5056	.5159	8.55
24.05	2.4089	.4216	1.0680	2.1308	.8564	1.1553	2.4057	.4266	1.0690	1.4424	.5058	.5161	8.55
RUN = 281													
-3.77	-.0864	-.8463	-.3361	-.1555	.0721	-.1966	-.0883	-.8213	-.3323	1.8767	.9252	.9210	8.08
-2.05	.1264	-.8545	-.2358	.0297	.0606	-.0963	.1239	-.8304	-.2321	1.8744	.9243	.9202	8.08
.00	.3232	-.8531	-.1455	.1936	.0590	-.0058	.3196	-.8281	-.1417	1.8724	.9254	.9213	8.08
1.97	.5043	-.8392	-.0651	.3438	.0663	.0744	.5002	-.8159	-.0616	1.8714	.9237	.9196	8.09
3.98	.7245	-.8133	.0455	.5329	.0824	.1845	.7203	-.7939	.0485	1.8680	.9199	.9159	8.09
5.97	.9200	-.7824	.1416	.6968	.1092	.2810	.9144	-.7599	.1451	1.8747	.9233	.9191	8.08
7.97	1.1508	-.7354	.2438	.8964	.1490	.3833	1.1441	-.7120	.2475	1.8764	.9245	.9203	8.08
9.99	1.3587	-.6755	.3327	1.0730	.2002	.4723	1.3509	-.6515	.3365	1.8763	.9254	.9212	8.08
12.00	1.5919	-.5946	.4370	1.2750	.2725	.5769	1.5826	-.5690	.4411	1.8747	.9273	.9231	8.08
14.00	1.7966	-.5008	.5349	1.4507	.3520	.6744	1.7875	-.4783	.5386	1.8754	.9245	.9203	8.08
16.05	1.9994	-.3875	.6323	1.6225	.4539	.7720	1.9888	-.3638	.6362	1.8748	.9261	.9219	8.08
18.09	2.2007	-.2589	.7224	1.7955	.5656	.8617	2.1907	-.2385	.7258	1.8740	.9228	.9187	8.08
20.07	2.3876	-.1281	.8187	1.9529	.6842	.9584	2.3757	-.1057	.8226	1.8746	.9255	.9214	8.08
22.16	2.5842	.0244	.9285	2.1198	.8210	1.0683	2.5711	.0470	.9325	1.8748	.9263	.9221	8.08
24.16	2.7437	.1772	1.0182	2.2508	.9586	1.1583	2.7288	.2008	1.0224	1.8737	.9280	.9238	8.08

TABLE 5.- CONTINUED.

VEO-WING 1/10-SCALE RESEARCH MODEL, VSTOL TEST NO. 204

ALPHA	CL	CD	CPM	CLE2	CDE2	CME2	CLCT	CDCT	CMCT	NPR	CT	CTRF	THETAJ
RUN = 282													
-3.74	.0014	-1.4659	-.4138	-.1074	.0622	-.1919	-.0015	-1.4255	-.4080	2.5672	1.5407	1.5320	7.81
-2.01	.1871	-1.4791	-.3443	.0318	.0525	-.1213	.1823	-1.4313	-.3373	2.5652	1.5483	1.5395	7.81
.00	.4529	-1.4685	-.2348	.2442	.0531	-.0123	.4469	-1.4245	-.2284	2.5658	1.5447	1.5359	7.81
2.04	.6520	-1.4544	-.1577	.3890	.0606	.0649	.6441	-1.4088	-.1510	2.5628	1.5465	1.5376	7.80
4.02	.8862	-1.4142	-.0522	.5730	.0822	.1693	.8785	-1.3776	-.0468	2.5644	1.5376	1.5289	7.80
5.97	1.1147	-1.3831	.0420	.7489	.1082	.2645	1.1042	-1.3403	.0484	2.5673	1.5443	1.5355	7.81
7.98	1.3556	-1.3223	.1455	.9397	.1487	.3669	1.3455	-1.2865	.1509	2.5634	1.5374	1.5286	7.80
9.99	1.5928	-1.2494	.2372	1.1259	.2049	.4585	1.5818	-1.2152	.2425	2.5657	1.5362	1.5274	7.81
12.01	1.8464	-1.1595	.3346	1.3279	.2791	.5561	1.8336	-1.1239	.3401	2.5641	1.5380	1.5292	7.80
14.08	2.0938	-1.0587	.4360	1.5216	.3654	.6583	2.0776	-1.0185	.4423	2.5657	1.5436	1.5348	7.81
16.11	2.3146	-.9341	.5314	1.6941	.4651	.7531	2.2988	-.8983	.5371	2.5646	1.5394	1.5306	7.80
18.08	2.5476	-.8007	.6103	1.8763	.5826	.8330	2.5275	-.7592	.6170	2.5635	1.5464	1.5376	7.80
20.08	2.7643	-.6412	.7094	2.0487	.7112	.9310	2.7463	-.6070	.7150	2.5628	1.5388	1.5300	7.80
22.17	2.9695	-.4759	.8066	2.2061	.8479	1.0279	2.9512	-.4441	.8120	2.5626	1.5370	1.5282	7.80
24.09	3.1482	-.3133	.9001	2.3397	.9860	1.1217	3.1277	-.2803	.9057	2.5617	1.5391	1.5303	7.80
RUN = 283													
-3.72	.0226	-1.9586	-.5135	-.1161	.0584	-.2193	.0207	-1.9303	-.5094	3.1131	2.0284	2.0217	7.66
-2.02	.2687	-1.9647	-.4137	.0697	.0488	-.1192	.2657	-1.9349	-.4093	3.1130	2.0300	2.0233	7.66
-.00	.5049	-1.9613	-.3332	.2348	.0511	-.0379	.5000	-1.9246	-.3278	3.1148	2.0371	2.0304	7.65
1.98	.7504	-1.9312	-.2322	.4122	.0596	.0618	.7460	-1.9056	-.2284	3.1119	2.0260	2.0193	7.66
4.03	.9940	-1.8991	-.1419	.5845	.0801	.1523	.9884	-1.8720	-.1379	3.1124	2.0278	2.0211	7.66
6.01	1.2377	-1.8568	-.0444	.7600	.1069	.2499	1.2312	-1.8299	-.0404	3.1115	2.0278	2.0210	7.67
8.02	1.5158	-1.8057	.0608	.9679	.1479	.3560	1.5062	-1.7714	.0660	3.1137	2.0357	2.0290	7.65
9.99	1.7517	-1.7279	.1442	1.1379	.2011	.4390	1.7423	-1.6984	.1487	3.1119	2.0311	2.0243	7.66
12.12	2.0400	-1.6229	.2507	1.3552	.2803	.5452	2.0301	-1.5954	.2549	3.1114	2.0294	2.0227	7.67
14.11	2.2932	-1.5093	.3505	1.5448	.3641	.6444	2.2843	-1.4870	.3540	3.1112	2.0241	2.0174	7.67
16.13	2.5367	-1.3778	.4413	1.7217	.4700	.7355	2.5262	-1.3539	.4451	3.1103	2.0263	2.0196	7.67
18.09	2.7746	-1.2362	.5244	1.8963	.5833	.8188	2.7629	-1.2119	.5283	3.1103	2.0271	2.0204	7.67
20.13	3.0154	-1.0710	.6250	2.0730	.7159	.9194	3.0029	-1.0473	.6289	3.1101	2.0269	2.0202	7.67
22.11	3.2422	-.8935	.7284	2.2418	.8541	1.0219	3.2321	-.8758	.7313	3.1094	2.0204	2.0137	7.68
24.09	3.4270	-.7284	.8113	2.3634	.9896	1.1057	3.4127	-.7052	.8153	3.1106	2.0273	2.0206	7.67
RUN = 284													
7.99	.8196	.1273	.3718	.8196	.1273	.3718	.8196	.1273	.3718	1.0035	0.0000	0.0000	0.00
7.99	.8309	.0517	.3705	.8000	.1527	.3841	.8000	.1527	.3841	1.0434	.0696	.1057	9.03
8.00	.8765	-.0716	.3271	.8190	.1281	.3571	.8832	-.0946	.3237	1.1401	.1793	.2078	8.07
8.00	.9647	-.2822	.2871	.8483	.1165	.3547	.9648	-.2825	.2870	1.3410	.3997	.4153	8.27
8.02	1.0926	-.6323	.2215	.8621	.1548	.3497	1.0865	-.6115	.2249	1.7637	.8218	.8202	8.31
8.04	1.2908	-1.0184	.1957	.9585	.1666	.3732	1.2803	-.9809	.2013	2.2225	1.2391	1.2307	7.62
8.04	1.3857	-1.4003	.1128	.9400	.1576	.3505	1.3778	-1.3726	.1170	2.6616	1.6289	1.6204	7.93
8.04	1.5028	-1.7976	.0462	.9548	.1574	.3407	1.4928	-1.7620	.0515	3.1206	2.0371	2.0304	7.61
7.97	1.7708	-2.9427	-.1038	.9474	.1890	.3334	1.7585	-2.8959	-.0973	3.5227	3.2485	3.2381	6.76
8.03	2.1845	-4.4784	-.3478	.9440	.2204	.3084	2.1908	-4.5022	-.3512	3.5233	4.8754	4.8598	6.76

TABLE 5.- CONTINUED.

VEO-WING 1/10-SCALE RESEARCH MODEL, VSTOL TEST NO. 204

ALPHA	CL	CD	CPM	CLE2	CDE2	CME2	CLCT	CDCT	CMCT	NPR	CT	CTRF	THETAJ
RUN = 285													
-3.77	.1288	.0442	-.2506	.1288	.0442	-.2506	.1288	.0442	-.2506	1.0000	0.0000	0.0000	0.00
-2.01	.2917	.0401	-.1555	.2917	.0401	-.1555	.2917	.0401	-.1555	1.0000	0.0000	0.0000	0.00
-.04	.4245	.0469	-.0758	.4245	.0469	-.0758	.4245	.0469	-.0758	1.0000	0.0000	0.0000	0.00
1.94	.5915	.0597	.0295	.5915	.0597	.0295	.5915	.0597	.0295	1.0000	0.0000	0.0000	0.00
3.98	.7618	.0833	.1301	.7618	.0833	.1301	.7618	.0833	.1301	1.0000	0.0000	0.0000	0.00
6.02	.9291	.1159	.2342	.9291	.1159	.2342	.9291	.1159	.2342	1.0000	0.0000	0.0000	0.00
8.05	1.1082	.1644	.3303	1.1082	.1644	.3303	1.1082	.1644	.3303	1.0000	0.0000	0.0000	0.00
10.03	1.2900	.2234	.4350	1.2900	.2234	.4350	1.2900	.2234	.4350	1.0000	0.0000	0.0000	0.00
12.05	1.4519	.3052	.5304	1.4519	.3052	.5304	1.4519	.3052	.5304	1.0000	0.0000	0.0000	0.00
14.08	1.5927	.3894	.6104	1.5927	.3894	.6104	1.5927	.3894	.6104	1.0000	0.0000	0.0000	0.00
16.14	1.7205	.4784	.7147	1.7205	.4784	.7147	1.7205	.4784	.7147	1.0005	0.0000	0.0000	0.00
18.05	1.8322	.5668	.8179	1.8322	.5668	.8179	1.8322	.5668	.8179	1.0009	0.0000	0.0000	0.00
20.05	1.9210	.6578	.9194	1.9210	.6578	.9194	1.9210	.6578	.9194	1.0010	0.0000	0.0000	0.00
22.03	2.0115	.7602	1.0263	2.0115	.7602	1.0263	2.0115	.7602	1.0263	1.0003	0.0000	0.0000	0.00
24.08	2.1165	.8866	1.1215	2.1165	.8866	1.1215	2.1165	.8866	1.1215	1.0000	0.0000	0.0000	0.00
RUN = 287													
-3.70	.3478	-.4698	-.3705	.2352	.0288	-.2497	.3474	-.4682	-.3701	1.4415	.5016	.5112	16.42
-2.01	.4826	-.4669	-.3060	.3543	.0324	-.1842	.4811	-.4611	-.3046	1.4427	.5059	.5155	16.42
.00	.6765	-.4497	-.2093	.5317	.0418	-.0882	.6757	-.4469	-.2086	1.4439	.5029	.5123	16.42
2.03	.8350	-.4294	-.1313	.6721	.0589	-.0096	.8333	-.4243	-.1300	1.4443	.5053	.5148	16.42
4.03	1.0545	-.3962	-.0153	.8744	.0870	.1066	1.0523	-.3904	-.0138	1.4437	.5061	.5157	16.42
6.03	1.2327	-.3537	.0821	1.0363	.1218	.2037	1.2308	-.3491	.0833	1.4428	.5049	.5145	16.42
8.03	1.4549	-.2937	.2021	1.2423	.1739	.3235	1.4531	-.2899	.2031	1.4433	.5041	.5137	16.42
10.01	1.6156	-.2277	.2855	1.3867	.2328	.4070	1.6135	-.2234	.2866	1.4439	.5048	.5143	16.42
12.03	1.7983	-.1316	.3860	1.5530	.3210	.5077	1.7957	-.1269	.3873	1.4437	.5053	.5148	16.42
14.05	1.9534	-.0394	.4764	1.6923	.4045	.5981	1.9506	-.0346	.4777	1.4451	.5055	.5149	16.42
16.06	2.1338	.0751	.5850	1.8570	.5102	.7069	2.1305	.0804	.5865	1.4438	.5061	.5157	16.42
18.03	2.2675	.1788	.6741	1.9746	.6057	.7965	2.2628	.1857	.6761	1.4446	.5082	.5178	16.42
20.01	2.4233	.3073	.7850	2.1170	.7222	.9069	2.4195	.3124	.7865	1.4452	.5062	.5157	16.42
22.07	2.5378	.4343	.8863	2.2167	.8381	1.0082	2.5337	.4394	.8878	1.4440	.5064	.5159	16.42
24.07	2.6592	.5738	.9908	2.3224	.9684	1.1134	2.6530	.5810	.9930	1.4461	.5093	.5188	16.42

TABLE 5.- CONTINUED.

VEO-WING 1/10-SCALE RESEARCH MODEL, VSTOL TEST NO. 204

ALPHA	CL	CD	CPM	CLE2	CDE2	CME2	CLCT	CDCT	CMCT	NPR	CT	CTRF	THETAJ
RUN = 288													
-3.74	.4843	-.8168	-.4972	.2356	.0750	-.2621	.4782	-.7950	-.4914	1.8740	.9226	.9258	19.32
-1.99	.6582	-.8068	-.4205	.3824	.0770	-.1854	.6514	-.7851	-.4147	1.8763	.9227	.9259	19.33
.04	.8469	-.7867	-.3320	.5403	.0858	-.0972	.8397	-.7662	-.3265	1.8752	.9217	.9249	19.32
2.00	1.0563	-.7613	-.2327	.7184	.1041	.0031	1.0468	-.7372	-.2262	1.8757	.9258	.9290	19.32
4.03	1.2474	-.7225	-.1271	.8800	.1282	.1082	1.2381	-.7009	-.1212	1.8763	.9234	.9266	19.32
6.04	1.4460	-.6771	-.0306	1.0467	.1649	.2060	1.4336	-.6511	-.0233	1.8757	.9286	.9319	19.32
8.02	1.6646	-.6106	.0724	1.2360	.2179	.3092	1.6509	-.5842	.0799	1.8765	.9296	.9328	19.33
9.99	1.8705	-.5309	.1827	1.4150	.2805	.4190	1.8571	-.5071	.1897	1.8759	.9273	.9305	19.32
12.04	2.0580	-.4366	.2863	1.5732	.3589	.5229	2.0432	-.4123	.2936	1.8760	.9284	.9316	19.32
14.01	2.2436	-.3319	.3860	1.7318	.4463	.6224	2.2281	-.3083	.3931	1.8762	.9282	.9314	19.32
16.03	2.4225	-.2047	.4877	1.8844	.5537	.7238	2.4070	-.1829	.4945	1.8754	.9267	.9299	19.32
18.07	2.6022	-.0784	.5825	2.0345	.6642	.8198	2.5830	-.0533	.5905	1.8773	.9315	.9348	19.33
20.01	2.7551	.0608	.6817	2.1649	.7811	.9181	2.7373	.0825	.6888	1.8760	.9279	.9312	19.32
22.03	2.8924	.2035	.7873	2.2771	.9025	1.0238	2.8738	.2246	.7945	1.8760	.9280	.9312	19.32
24.05	3.0099	.3566	.8784	2.3716	1.0321	1.1143	2.9919	.3757	.8850	1.8761	.9262	.9294	19.32
RUN = 289													
-3.63	.6727	-1.4257	-.6739	.2295	.0650	-.2688	.6619	-1.3893	-.6640	2.5599	1.5376	1.5552	20.19
-2.00	.8566	-1.4135	-.6018	.3697	.0683	-.1954	.8434	-1.3732	-.5907	2.5609	1.5419	1.5597	20.19
.04	1.0842	-1.3894	-.5057	.5439	.0763	-.0986	1.0688	-1.3474	-.4941	2.5628	1.5443	1.5620	20.19
2.01	1.3084	-1.3472	-.4047	.7206	.0934	.0007	1.2938	-1.3114	-.3946	2.5602	1.5382	1.5558	20.19
3.99	1.5197	-1.2978	-.3003	.8836	.1191	.1043	1.5050	-1.2651	-.2910	2.5600	1.5354	1.5531	20.19
6.05	1.7532	-1.2450	-.1965	1.0620	.1568	.2109	1.7330	-1.2041	-.1846	2.5645	1.5451	1.5629	20.20
10.07	2.2517	-1.0647	.0339	1.4670	.2806	.4396	2.2315	-1.0299	.0444	2.5599	1.5398	1.5574	20.19
12.08	2.4110	-.9517	.1238	1.5863	.3557	.5260	2.3957	-.9274	.1313	2.5506	1.5284	1.5458	20.16
14.04	2.6356	-.8294	.2360	1.7662	.4494	.6386	2.6191	-.8053	.2436	2.5540	1.5289	1.5463	20.17
16.02	2.8120	-.6981	.3178	1.8980	.5513	.7208	2.7938	-.6731	.3259	2.5541	1.5305	1.5480	20.17
18.07	3.0013	-.5571	.4014	2.0403	.6621	.8057	2.9795	-.5295	.4105	2.5574	1.5347	1.5523	20.18
20.07	3.1993	-.3880	.5186	2.2014	.7913	.9208	3.1814	-.3668	.5258	2.5537	1.5274	1.5448	20.17
22.09	3.3746	-.2279	.6276	2.3304	.9209	1.0318	3.3508	-.2018	.6368	2.5550	1.5349	1.5524	20.17
24.08	3.4899	-.0495	.7129	2.4149	1.0540	1.1139	3.4736	-.0327	.7190	2.5536	1.5232	1.5406	20.17
8.04	1.9746	-1.1470	-.1061	1.2408	.2209	.2980	1.9580	-1.1161	-.0970	2.5555	1.5347	1.5522	20.17

TABLE 5.- CONTINUED.

VEO-WING 1/10-SCALE RESEARCH MODEL,VSTOL TEST NO. 204

ALPHA	CL	CD	CPM	CLE2	CDE2	CME2	CLCT	CDCT	CMCT	NPR	CT	CTRF	THETAJ
RUN = 290													
-2.03	1.0097	-1.8887	-.7389	.3797	.0724	-.2039	1.0009	-1.8612	-.7314	3.1181	2.0284	2.0599	19.84
-.01	1.2228	-1.8530	-.6558	.5257	.0809	-.1218	1.2144	-1.8298	-.6494	3.1181	2.0243	2.0557	19.84
2.06	1.4779	-1.8199	-.5592	.7069	.0990	-.0221	1.4641	-1.7856	-.5496	3.1208	2.0364	2.0680	19.83
4.03	1.7280	-1.7668	-.4448	.8916	.1242	.0922	1.7132	-1.7333	-.4353	3.1205	2.0361	2.0677	19.83
6.02	1.9857	-1.7059	-.3320	1.0812	.1606	.2067	1.9670	-1.6671	-.3208	3.1209	2.0424	2.0741	19.83
8.04	2.2178	-1.6227	-.2429	1.2468	.2128	.2965	2.1965	-1.5825	-.2311	3.1192	2.0447	2.0765	19.84
10.05	2.4527	-1.5252	-.1433	1.4171	.2771	.3967	2.4290	-1.4839	-.1309	3.1235	2.0469	2.0787	19.83
12.06	2.6811	-1.4053	-.0316	1.5884	.3505	.5055	2.6615	-1.3739	-.0220	3.1194	2.0364	2.0680	19.84
14.08	2.8913	-1.2716	.0694	1.7407	.4397	.6050	2.8739	-1.2458	.0775	3.1177	2.0306	2.0621	19.84
16.06	3.1130	-1.1256	.1722	1.9012	.5486	.7091	3.0920	-1.0967	.1815	3.1204	2.0352	2.0668	19.83
18.07	3.3052	-.9701	.2556	2.0371	.6589	.7918	3.2847	-.9438	.2643	3.1211	2.0329	2.0645	19.83
20.06	3.5292	-.7931	.3645	2.2035	.7929	.9014	3.5061	-.7655	.3739	3.1198	2.0354	2.0670	19.84
22.12	3.7092	-.6122	.4710	2.3262	.9265	1.0084	3.6839	-.5840	.4809	3.1236	2.0373	2.0689	19.83
24.05	3.8594	-.4330	.5724	2.4278	1.0556	1.1089	3.8357	-.4083	.5813	3.1179	2.0338	2.0653	19.84
RUN = 291													
8.02	1.1156	.1824	.3200	1.1156	.1824	.3200	1.1156	.1824	.3200	1.0000	0.0000	0.0000	0.00
8.02	1.1306	.1085	.2811	1.0811	.2025	.3063	1.1504	.0711	.2710	1.0449	.0715	.1062	19.77
8.04	1.2526	.0044	.2471	1.1603	.1860	.2943	1.2647	-.0194	.2409	1.1371	.1768	.2037	18.90
8.05	1.3680	-.1963	.1873	1.1958	.1781	.2831	1.3688	-.1981	.1869	1.3401	.3981	.4121	16.64
8.07	1.6131	-.5228	.0777	1.2313	.2270	.2898	1.5956	-.4886	.0874	1.7828	.8383	.8414	18.91
8.09	1.8286	-.8689	-.0182	1.2503	.2312	.3004	1.8124	-.8381	-.0093	2.2217	1.2345	1.2428	19.64
8.10	2.0560	-1.2296	-.1356	1.2646	.2249	.3006	2.0391	-1.1986	-.1263	2.6727	1.6349	1.6559	20.45
8.11	2.1936	-1.5990	-.2424	1.2291	.2188	.2921	2.1810	-1.5753	-.2354	3.1132	2.0264	2.0578	19.84
8.01	2.7343	-2.6350	-.5569	1.2336	.2484	.2888	2.7307	-2.6281	-.5549	3.5024	3.2077	3.2505	19.49
8.02	3.5036	-4.1466	-1.0069	1.2090	.2635	.2867	3.5003	-4.1402	-1.0050	3.5250	4.9071	4.9713	19.47
RUN = 292													
-3.87	.1404	.0416	-.2539	.1404	.0416	-.2539	.1404	.0416	-.2539	1.0011	0.0000	0.0000	0.00
-2.01	.2933	.0392	-.1608	.2933	.0392	-.1608	.2933	.0392	-.1608	1.0013	0.0000	0.0000	0.00
-.02	.4259	.0469	-.0807	.4259	.0469	-.0807	.4259	.0469	-.0807	1.0011	0.0000	0.0000	0.00
2.01	.5928	.0597	.0206	.5928	.0597	.0206	.5928	.0597	.0206	1.0008	0.0000	0.0000	0.00
4.01	.7696	.0828	.1299	.7696	.0828	.1299	.7696	.0828	.1299	1.0002	0.0000	0.0000	0.00
6.01	.9222	.1162	.2229	.9222	.1162	.2229	.9222	.1162	.2229	1.0000	0.0000	0.0000	0.00
8.03	1.1013	.1634	.3250	1.1013	.1634	.3250	1.1013	.1634	.3250	1.0000	0.0000	0.0000	0.00
10.04	1.3033	.2257	.4427	1.3033	.2257	.4427	1.3033	.2257	.4427	1.0000	0.0000	0.0000	0.00
12.02	1.4411	.2927	.5298	1.4411	.2927	.5298	1.4411	.2927	.5298	1.0000	0.0000	0.0000	0.00
14.08	1.6027	.3750	.6383	1.6027	.3750	.6383	1.6027	.3750	.6383	1.0000	0.0000	0.0000	0.00
16.04	1.7252	.4620	.7360	1.7252	.4620	.7360	1.7252	.4620	.7360	1.0000	0.0000	0.0000	0.00
18.07	1.8154	.5506	.8185	1.8154	.5506	.8185	1.8154	.5506	.8185	1.0000	0.0000	0.0000	0.00
20.07	1.9370	.6547	.9339	1.9370	.6547	.9339	1.9370	.6547	.9339	1.0000	0.0000	0.0000	0.00
22.08	2.0263	.7602	1.0364	2.0263	.7602	1.0364	2.0263	.7602	1.0364	1.0000	0.0000	0.0000	0.00
24.06	2.1321	.8822	1.1301	2.1321	.8822	1.1301	2.1321	.8822	1.1301	1.0000	0.0000	0.0000	0.00

TABLE 5.- CONTINUED.

VEO-WING 1/10-SCALE RESEARCH MODEL, VSTOL TEST NO. 204

ALPHA	CL	CD	CPM	CLE2	CDE2	CME2	CLCT	CDCT	CMCT	NPR	CT	CTRF	THETAJ
RUN = 294													
-3.81	.3522	-.4089	-.3588	.2478	.0532	-.2501	.3567	-.4293	-.3635	1.4843	.4789	.4737	16.53
-2.00	.5139	-.4032	-.2810	.3954	.0543	-.1726	.5194	-.4248	-.2861	1.4816	.4775	.4726	16.51
.01	.7023	-.3910	-.1795	.5675	.0631	-.0708	.7083	-.4112	-.1843	1.4824	.4787	.4737	16.52
2.00	.8731	-.3704	-.0995	.7218	.0810	.0098	.8789	-.3878	-.1037	1.4854	.4815	.4761	16.54
4.01	1.0800	-.3352	.0054	.9131	.1102	.1145	1.0867	-.3529	.0010	1.4843	.4808	.4756	16.53
6.04	1.3017	-.2933	.1211	1.1190	.1462	.2304	1.3088	-.3104	.1169	1.4847	.4813	.4760	16.53
8.02	1.4561	-.2329	.1881	1.2584	.1996	.2973	1.4639	-.2501	.1838	1.4856	.4809	.4755	16.54
10.02	1.6686	-.1596	.2972	1.4560	.2658	.4064	1.6771	-.1765	.2929	1.4851	.4809	.4756	16.54
12.03	1.8498	-.0739	.3955	1.6229	.3427	.5044	1.8594	-.0917	.3909	1.4840	.4796	.4744	16.53
14.07	2.0681	.0295	.4884	1.8261	.4386	.5974	2.0780	.0128	.4839	1.4832	.4804	.4753	16.53
16.05	2.2545	.1438	.5737	1.9997	.5429	.6823	2.2659	.1260	.5688	1.4829	.4786	.4735	16.52
18.08	2.4544	.2713	.6702	2.1850	.6618	.7790	2.4660	.2545	.6655	1.4822	.4793	.4744	16.52
20.07	2.5969	.3995	.7629	2.3137	.7810	.8719	2.6086	.3833	.7584	1.4825	.4802	.4751	16.52
22.08	2.7142	.5316	.8747	2.4182	.9023	.9836	2.7268	.5157	.8701	1.4834	.4795	.4743	16.52
24.09	2.8115	.6691	.9646	2.5024	1.0296	1.0736	2.8243	.6542	.9601	1.4843	.4802	.4749	16.53
RUN = 295													
-3.69	.5744	-.7341	-.4415	.3573	.0641	-.2519	.5772	-.7444	-.4439	1.9273	.8836	.8272	18.90
-2.00	.7384	-.7276	-.3722	.4964	.0683	-.1815	.7401	-.7330	-.3735	1.9301	.8939	.8319	18.91
.01	.9203	-.7069	-.2876	.6502	.0816	-.0965	.9217	-.7108	-.2885	1.9295	.8956	.8335	18.91
2.00	1.1272	-.6769	-.1895	.8295	.1021	.0017	1.1285	-.6804	-.1903	1.9295	.8960	.8340	18.91
4.00	1.3376	-.6336	-.0866	1.0142	.1318	.1038	1.3403	-.6398	-.0882	1.9292	.8927	.8309	18.91
6.02	1.5550	-.5823	.0170	1.2021	.1761	.2087	1.5553	-.5830	.0168	1.9367	.8992	.8365	18.93
8.07	1.7705	-.5132	.1099	1.3900	.2333	.3019	1.7701	-.5125	.1100	1.9379	.9008	.8380	18.93
10.04	1.9836	-.4240	.2029	1.5784	.3079	.3946	1.9839	-.4244	.2027	1.9378	.8994	.8366	18.93
12.04	2.2193	-.3185	.2948	1.7893	.3980	.4863	2.2201	-.3198	.2944	1.9373	.8983	.8356	18.93
14.02	2.4640	-.2071	.3773	2.0081	.4962	.5694	2.4634	-.2062	.3775	1.9388	.9011	.8381	18.94
16.05	2.6978	-.0714	.4624	2.2174	.6152	.6545	2.6974	-.0708	.4626	1.9371	.9009	.8380	18.93
18.07	2.9423	.0832	.5531	2.4368	.7541	.7457	2.9406	.0854	.5538	1.9359	.9029	.8401	18.93
20.05	3.0970	.2326	.6369	2.5694	.8848	.8292	3.0960	.2339	.6373	1.9367	.9018	.8389	18.93
22.08	3.2514	.3930	.7473	2.7001	1.0269	.9399	3.2496	.3951	.7479	1.9362	.9029	.8401	18.93
24.05	3.3571	.5554	.8464	2.7865	1.1678	1.0383	3.3573	.5552	.8463	1.9347	.8997	.8371	18.92

TABLE 5.- CONTINUED.

VEO-WING 1/10-SCALE RESEARCH MODEL,VSTOL TEST NO. 204

ALPHA	CL	CD	CPM	CLE2	CDE2	CME2	CLCT	CDCT	CMCT	NPR	CT	CTRF	THETAJ
RUN = 296													
-3.64	.7611	-1.2424	-.5719	.4009	.0654	-.2607	.7606	-1.2404	-.5714	2.6128	1.5023	1.3565	19.04
-2.01	.9146	-1.2369	-.5201	.5137	.0725	-.2060	.9101	-1.2224	-.5167	2.6167	1.5168	1.3694	19.04
-.01	1.1767	-1.2085	-.3985	.7303	.0856	-.0844	1.1719	-1.1947	-.3952	2.6147	1.5161	1.3689	19.04
1.98	1.3574	-1.1652	-.3292	.8678	.1088	-.0161	1.3536	-1.1554	-.3268	2.6159	1.5117	1.3649	19.04
4.00	1.6069	-1.1142	-.2167	1.0717	.1440	.0970	1.6018	-1.1023	-.2137	2.6162	1.5144	1.3673	19.04
6.03	1.8287	-1.0420	-.1242	1.2521	.1906	.1880	1.8259	-1.0361	-.1227	2.6172	1.5071	1.3608	19.04
8.04	2.1016	-.9550	-.0200	1.4835	.2539	.2915	2.1000	-.9519	-.0192	2.6161	1.5039	1.3578	19.04
10.01	2.3274	-.8636	.0529	1.6671	.3254	.3650	2.3246	-.8585	.0543	2.6174	1.5064	1.3601	19.04
12.05	2.5996	-.7494	.1427	1.8945	.4200	.4560	2.5938	-.7398	.1453	2.6171	1.5125	1.3655	19.04
14.04	2.8842	-.6180	.2239	2.1380	.5278	.5376	2.8771	-.6071	.2269	2.6167	1.5143	1.3673	19.04
16.06	3.1359	-.4632	.3207	2.3520	.6523	.6335	3.1306	-.4557	.3228	2.6159	1.5101	1.3634	19.04
18.03	3.3498	-.3075	.4034	2.5277	.7810	.7164	3.3440	-.2998	.4056	2.6139	1.5107	1.3641	19.04
20.05	3.5743	-.1256	.5016	2.7144	.9331	.8145	3.5683	-.1182	.5038	2.6153	1.5106	1.3639	19.04
22.05	3.7367	.0528	.5964	2.8412	1.0797	.9089	3.7315	.0588	.5982	2.6140	1.5088	1.3624	19.04
24.08	3.8901	.2344	.7068	2.9564	1.2317	1.0202	3.8821	.2430	.7095	2.6138	1.5130	1.3662	19.04
RUN = 297													
-3.62	.9056	-1.6755	-.7143	.4167	.0537	-.2859	.9038	-1.6691	-.7127	3.1723	2.0075	1.7970	19.41
-1.99	1.0939	-1.6570	-.6441	.5550	.0604	-.2147	1.0910	-1.6479	-.6418	3.1741	2.0107	1.8000	19.41
.02	1.3273	-1.6149	-.5494	.7300	.0781	-.1210	1.3258	-1.6104	-.5483	3.1746	2.0053	1.7953	19.42
2.03	1.5387	-1.5740	-.4616	.8797	.1032	-.0314	1.5345	-1.5633	-.4588	3.1768	2.0128	1.8020	19.42
4.01	1.8029	-1.5119	-.3358	1.0876	.1385	.0935	1.7996	-1.5043	-.3338	3.1768	2.0092	1.7987	19.42
6.01	2.0361	-1.4498	-.2447	1.2593	.1833	.1872	2.0284	-1.4336	-.2404	3.1790	2.0200	1.8084	19.43
8.03	2.2925	-1.3562	-.1527	1.4610	.2442	.2779	2.2865	-1.3447	-.1496	3.1775	2.0145	1.8035	19.43
10.05	2.5572	-1.2420	-.0584	1.6750	.3195	.3697	2.5557	-1.2393	-.0576	3.1769	2.0034	1.7935	19.42
12.05	2.8400	-1.1169	.0355	1.9046	.4114	.4631	2.8393	-1.1157	.0359	3.1766	2.0016	1.7918	19.42
14.04	3.1208	-.9832	.1270	2.1303	.5152	.5558	3.1176	-.9785	.1284	3.1775	2.0064	1.7962	19.43
16.06	3.3862	-.8271	.2162	2.3423	.6375	.6455	3.3815	-.8205	.2181	3.1779	2.0091	1.7985	19.42
18.03	3.6306	-.6610	.3134	2.5345	.7696	.7437	3.6234	-.6517	.3162	3.1782	2.0131	1.8022	19.43
20.06	3.8325	-.4788	.4082	2.6869	.9115	.8382	3.8255	-.4703	.4108	3.1777	2.0124	1.8015	19.42
22.04	4.0352	-.2875	.5160	2.8415	1.0639	.9461	4.0269	-.2780	.5190	3.1750	2.0141	1.8031	19.42
24.03	4.1842	-.0926	.6013	2.9464	1.2143	1.0306	4.1775	-.0855	.6037	3.1751	2.0108	1.8000	19.41
RUN = 298													
8.01	1.0902	.2053	.2872	1.0902	.2053	.2872	1.0902	.2053	.2872	1.0000	0.0000	0.0000	0.00
8.02	1.1757	.1257	.2803	1.1286	.2099	.3049	1.1286	.2099	.3049	1.0541	.0488	.0965	21.23
8.03	1.2823	.0304	.2427	1.2010	.2013	.2865	1.2545	.0888	.2577	1.1460	.1519	.1892	17.41
8.05	1.4238	-.1310	.1794	1.2695	.2186	.2668	1.4349	-.1560	.1731	1.3731	.3733	.3822	15.77
8.09	1.7212	-.4156	.0917	1.3803	.2615	.2656	1.7178	-.4089	.0935	1.8346	.8079	.7580	18.63
8.13	1.9491	-.7095	.0211	1.4445	.2711	.2741	1.9457	-.7028	.0228	2.2754	1.2082	1.1028	19.10
8.03	2.0982	-1.0246	-.0756	1.4392	.2662	.2568	2.0946	-1.0174	-.0737	2.7233	1.6089	1.4493	19.01
8.01	2.3094	-1.3436	-.1516	1.4766	.2579	.2806	2.3025	-1.3305	-.1481	3.1920	2.0165	1.8051	19.46
8.02	2.8855	-2.2948	-.4347	1.5755	.2771	.2523	2.8739	-2.2720	-.4286	3.6291	3.2286	2.8863	18.97
8.01	3.6111	-3.5459	-.8238	1.6558	.2865	.2017	3.6061	-3.5362	-.8212	3.6001	4.8122	4.3024	19.02

TABLE 5.- CONTINUED.

VEO-WING 1/10-SCALE RESEARCH MODEL, VSTOL TEST NO. 204

ALPHA	CL	CD	CPM	CLE2	CDE2	CME2	CLCT	CDCT	CMCT	NPR	CT	CTRF	THETAJ
RUN = 299													
16.06	4.9352	-2.8430	-.4014	2.4690	.6668	.6215	4.9362	-2.8445	-.4018	3.5926	4.7981	4.2897	19.03
16.05	4.0433	-1.6892	-.0343	2.3989	.6556	.6479	4.0414	-1.6865	-.0335	3.6143	3.2037	2.8640	19.00
16.04	3.4261	-.8859	.1922	2.3347	.6368	.6461	3.4292	-.8902	.1910	3.2748	2.0941	1.8735	19.60
16.02	3.1436	-.5570	.2779	2.3039	.6409	.6133	3.1308	-.5387	.2831	2.7446	1.6248	1.4629	19.01
16.05	2.9429	-.2646	.3750	2.2990	.6502	.6317	2.9290	-.2448	.3806	2.2984	1.2266	1.1187	19.09
16.00	2.5887	-.0155	.4762	2.1627	.6020	.6482	2.5895	-.0166	.4759	1.8229	.7985	.7502	18.60
16.04	2.1705	.2132	.5699	1.9665	.5420	.6584	2.1821	.1945	.5649	1.3765	.3785	.3870	15.79
16.07	1.9288	.3474	.6379	1.8234	.5068	.6822	1.8919	.4032	.6534	1.1483	.1538	.1911	17.40
16.06	1.7897	.4309	.6723	1.7334	.5044	.6961	1.7334	.5044	.6961	1.0478	.0440	.0926	21.38
16.03	1.7004	.4952	.6846	1.7004	.4952	.6846	1.7004	.4952	.6846	1.0000	0.0000	0.0000	0.00
RUN = 301													
-3.88	-.1629	.0400	-.1962	-.1629	.0400	-.1962	-.1629	.0400	-.1962	1.0046	0.0000	0.0000	0.00
-2.02.	-.0178	.0290	-.1105	-.0178	.0290	-.1105	-.0178	.0290	-.1105	1.0049	0.0000	0.0000	0.00
.01	.1836	.0248	.0083	.1836	.0248	.0083	.1836	.0248	.0083	1.0046	0.0000	0.0000	0.00
2.00	.3112	.0321	.0781	.3112	.0321	.0781	.3112	.0321	.0781	1.0046	0.0000	0.0000	0.00
4.00	.4683	.0449	.1758	.4683	.0449	.1758	.4683	.0449	.1758	1.0040	0.0000	0.0000	0.00
6.01	.6286	.0689	.2841	.6236	.0689	.2841	.6286	.0689	.2841	1.0041	0.0000	0.0000	0.00
8.05	.8167	.1056	.3903	.8167	.1056	.3903	.8167	.1056	.3903	1.0034	0.0000	0.0000	0.00
4.00	.4877	.0495	.1877	.4877	.0495	.1877	.4877	.0495	.1877	1.0042	0.0000	0.0000	0.00
10.04	.9975	.1540	.4882	.9975	.1540	.4882	.9975	.1540	.4882	1.0026	0.0000	0.0000	0.00
12.04	1.1622	.2139	.5732	1.1622	.2139	.5732	1.1622	.2139	.5732	1.0025	0.0000	0.0000	0.00
14.04	1.3288	.2861	.6736	1.3288	.2861	.6736	1.3288	.2861	.6736	1.0025	0.0000	0.0000	0.00
16.05	1.4696	.3681	.7632	1.4696	.3681	.7632	1.4696	.3681	.7632	1.0021	0.0000	0.0000	0.00
18.06	1.5772	.4513	.8409	1.5772	.4513	.8409	1.5772	.4513	.8409	1.0023	0.0000	0.0000	0.00
20.04	1.6950	.5434	.9504	1.6950	.5434	.9504	1.6950	.5434	.9504	1.0018	0.0000	0.0000	0.00
22.03	1.8030	.6431	1.0500	1.8030	.6431	1.0500	1.8030	.6431	1.0500	1.0011	0.0000	0.0000	0.00
24.06	1.8874	.7525	1.1257	1.8874	.7525	1.1257	1.8874	.7525	1.1257	1.0000	0.0000	0.0000	0.00

TABLE 5.- CONTINUED.

VEO-WING 1/10-SCALE RESEARCH MODEL, VSTOL TEST NO. 204

ALPHA	CL	CD	CPM	CLE2	CDE2	CME2	CLCT	CDCT	CMCT	NPR	CT	CTRF	THETAJ
RUN = 303													
-3.81	-.1245	.0497	-.1712	-.1245	.0497	-.1712	-.1245	.0497	-.1712	1.0052	0.0000	0.0000	0.00
-3.79	-.1055	-.4421	-.2511	-.1357	.0420	-.1773	-.1049	-.4525	-.2527	1.4926	.4895	.4850	7.36
-1.95	.0731	-.4495	-.1617	.0273	.0330	-.0879	.0741	-.4603	-.1633	1.4923	.4891	.4847	7.36
-.02	.2691	-.4474	-.0726	.2073	.0325	.0010	.2706	-.4589	-.0744	1.4928	.4883	.4838	7.36
2.01	.4578	-.4359	.0185	.3788	.0428	.0923	.4595	-.4461	.0169	1.4924	.4895	.4851	7.36
4.00	.6585	-.4154	.1201	.5631	.0596	.1938	.6606	-.4261	.1184	1.4933	.4890	.4845	7.36
6.01	.8563	-.3839	.2258	.7445	.0866	.2994	.8590	-.3953	.2240	1.4937	.4881	.4836	7.36
7.98	1.0478	-.3446	.3201	.9197	.1222	.3938	1.0508	-.3555	.3184	1.4934	.4886	.4841	7.36
10.00	1.2440	-.2875	.4107	1.0995	.1748	.4844	1.2473	-.2980	.4090	1.4934	.4889	.4844	7.36
12.06	1.4491	-.2034	.5006	1.2887	.2514	.5740	1.4535	-.2159	.4986	1.4922	.4867	.4823	7.36
14.02	1.6530	-.1178	.5843	1.4775	.3305	.6576	1.6582	-.1311	.5821	1.4911	.4857	.4815	7.36
16.02	1.8717	-.0132	.6690	1.6798	.4303	.7426	1.8766	-.0246	.6671	1.4912	.4875	.4832	7.36
17.99	2.0652	.0991	.7414	1.8583	.5355	.8149	2.0706	.0876	.7394	1.4909	.4872	.4830	7.36
20.01	2.2673	.2332	.8371	2.0459	.6607	.9104	2.2738	.2206	.8350	1.4913	.4857	.4814	7.36
22.04	2.4226	.3658	.9290	2.1853	.7868	1.0026	2.4286	.3551	.9272	1.4919	.4876	.4833	7.36
24.01	2.5763	.5140	1.0307	2.3257	.9250	1.1040	2.5837	.5018	1.0286	1.4904	.4855	.4814	7.37
RUN = 304													
-3.72	-.0382	-.7990	-.2924	-.0763	.0524	-.1956	-.0388	-.7841	-.2907	1.9526	.9161	.8523	6.29
-1.95	.1549	-.8057	-.2012	.0904	.0450	-.1043	.1537	-.7900	-.1994	1.9520	.9170	.8531	6.29
-.01	.3554	-.7961	-.1210	.2628	.0458	-.0247	.3544	-.7867	-.1199	1.9487	.9102	.8470	6.29
2.05	.5834	-.7797	-.0170	.4606	.0581	.0793	.5820	-.7708	-.0159	1.9464	.9097	.8467	6.29
4.01	.7838	-.7608	.0762	.6315	.0775	.1729	.7811	-.7461	.0779	1.9547	.9160	.8520	6.29
6.00	1.0032	-.7228	.1822	.8226	.1070	.2787	1.0007	-.7112	.1836	1.9518	.9127	.8492	6.29
8.02	1.2012	-.6749	.2689	.9911	.1490	.3655	1.1980	-.6625	.2704	1.9504	.9138	.8503	6.29
10.01	1.4394	-.6079	.3634	1.2008	.2082	.4600	1.4358	-.5955	.3649	1.9506	.9138	.8503	6.29
12.06	1.6873	-.5190	.4484	1.4199	.2875	.5450	1.6835	-.5074	.4498	1.9490	.9131	.8497	6.29
14.03	1.9441	-.4175	.5317	1.6496	.3778	.6281	1.9405	-.4077	.5329	1.9480	.9113	.8481	6.29
16.05	2.2001	-.2959	.6184	1.8780	.4880	.7148	2.1963	-.2868	.6196	1.9468	.9106	.8475	6.29
18.05	2.4269	-.1604	.6796	2.0773	.6128	.7760	2.4224	-.1504	.6808	1.9467	.9118	.8486	6.29
20.07	2.6540	-.0123	.7701	2.2757	.7513	.8669	2.6473	.0012	.7718	1.9550	.9162	.8522	6.29
22.07	2.8355	.1346	.8651	2.4290	.8876	.9623	2.8267	.1509	.8672	1.9543	.9199	.8557	6.29
24.02	3.0155	.3068	.9738	2.5867	1.0403	1.0703	3.0092	.3175	.9752	1.9530	.9133	.8496	6.29
16.04	2.1867	-.3002	.6066	1.8629	.4883	.7034	2.1809	-.2861	.6083	1.9545	.9164	.8524	6.29

TABLE 5.- CONTINUED.

VEO-WING 1/10-SCALE RESEARCH MODEL, VSTOL TEST NO. 204

ALPHA	CL	CD	CPM	CLE2	CDE2	CME2	CLCT	CDCT	CMCT	NPR	CT	CTRF	THETAJ
RUN = 305													
-3.78	.0120	-1.3403	-.3544	-.0387	.0477	-.2051	.0106	-1.3017	-.3502	2.6540	1.5429	1.3889	5.87
-1.97	.2233	-1.3458	-.2737	.1286	.0412	-.1243	.2206	-1.3061	-.2694	2.6515	1.5442	1.3902	5.88
.00	.4491	-1.3330	-.1925	.3071	.0457	-.0435	.4454	-1.2977	-.1887	2.6507	1.5393	1.3860	5.88
2.02	.6857	-1.3199	-.0958	.4947	.0577	.0537	.6802	-1.2800	-.0915	2.6509	1.5447	1.3908	5.88
4.01	.9320	-1.2882	.0152	.6932	.0822	.1647	.9250	-1.2481	.0195	2.6521	1.5452	1.3911	5.87
6.04	1.1897	-1.2435	.1210	.9022	.1188	.2707	1.1810	-1.2024	.1255	2.6535	1.5466	1.3923	5.87
5.99	1.1595	-1.2432	.1102	.8747	.1126	.2591	1.1523	-1.2090	.1140	2.6519	1.5388	1.3854	5.87
7.99	1.3926	-1.1857	.1958	1.0605	.1592	.3447	1.3842	-1.1520	.1995	2.6505	1.5386	1.3853	5.88
10.02	1.6745	-1.1117	.2907	1.2942	.2234	.4400	1.6641	-1.0754	.2948	2.6511	1.5419	1.3882	5.88
11.99	1.9448	-1.0137	.3702	1.5194	.3060	.5192	1.9338	-.9794	.3740	2.6514	1.5400	1.3865	5.88
14.02	2.2223	-.9067	.4497	1.7496	.3995	.5990	2.2091	-.8703	.4539	2.6508	1.5430	1.3891	5.88
16.03	2.5116	-.7665	.5352	1.9940	.5183	.6843	2.4980	-.7347	.5391	2.6501	1.5405	1.3870	5.88
18.04	2.7636	-.6220	.6073	2.2011	.6463	.7564	2.7487	-.5884	.6112	2.6482	1.5409	1.3875	5.88
20.03	3.0218	-.4571	.6971	2.4156	.7911	.8462	3.0056	-.4238	.7010	2.6503	1.5412	1.3876	5.88
22.05	3.2650	-.2775	.7965	2.6140	.9507	.9459	3.2465	-.2428	.8007	2.6492	1.5437	1.3900	5.88
24.04	3.4538	-.0993	.8886	2.7616	1.1040	1.0378	3.4349	-.0665	.8926	2.6525	1.5420	1.3882	5.87
RUN = 306													
-3.76	.0751	-1.7652	-.4691	-.0285	.0519	-.2466	.0729	-1.7276	-.4645	3.2096	2.0423	1.8200	7.03
-2.03	.3026	-1.7604	-.3796	.1446	.0457	-.1580	.2999	-1.7300	-.3759	3.2076	2.0343	1.8130	7.02
-.02	.6117	-1.7561	-.2722	.3894	.0510	-.0493	.6070	-1.7178	-.2675	3.2152	2.0433	1.8207	7.04
1.99	.8338	-1.7297	-.1814	.5497	.0628	.0403	.8288	-1.6976	-.1774	3.2066	2.0364	1.8149	7.02
4.00	1.0865	-1.6881	-.0775	.7402	.0905	.1438	1.0808	-1.6590	-.0739	3.2064	2.0332	1.8119	7.02
6.03	1.3427	-1.6430	.0281	.9330	.1236	.2499	1.3356	-1.6126	.0319	3.2106	2.0350	1.8135	7.03
8.03	1.6008	-1.5796	.1078	1.1296	.1732	.3294	1.5923	-1.5481	.1118	3.2056	2.0367	1.8151	7.01
10.05	1.8978	-1.4929	.2090	1.3648	.2429	.4309	1.8880	-1.4611	.2130	3.2077	2.0373	1.8157	7.02
12.03	2.1630	-1.3937	.2871	1.5708	.3207	.5087	2.1528	-1.3640	.2909	3.2078	2.0353	1.8138	7.02
14.03	2.4662	-1.2791	.3717	1.8131	.4173	.5940	2.4535	-1.2460	.3760	3.2116	2.0398	1.8178	7.03
15.99	2.7569	-1.1347	.4570	2.0480	.5341	.6786	2.7448	-1.1063	.4607	3.2086	2.0346	1.8132	7.02
17.99	3.0430	-.9777	.5395	2.2761	.6648	.7613	3.0301	-.9502	.5432	3.2116	2.0341	1.8127	7.03
19.99	3.3078	-.8002	.6204	2.4851	.8136	.8416	3.2946	-.7744	.6240	3.2059	2.0325	1.8114	7.02
22.03	3.5620	-.6114	.7166	2.6817	.9735	.9382	3.5472	-.5847	.7204	3.2065	2.0343	1.8130	7.02
24.01	3.7870	-.4120	.8032	2.8524	1.1419	1.0247	3.7711	-.3856	.8069	3.2062	2.0346	1.8133	7.02

TABLE 5.- CONTINUED.

VEO-WING 1/10-SCALE RESEARCH MODEL, VSTOL TEST NO. 204

ALPHA	CL	CD	CPM	CLE2	CDE2	CME2	CLCT	CDCT	CMCT	NPR	CT	CTRF	THETAJ
RUN = 307													
7.99	.8090	.1106	.3465	.8090	.1106	.3465	.8090	.1106	.3465	1.0010	0.0000	0.0000	0.00
7.97	.8124	.0261	.3352	.7814	.1203	.3494	.7814	.1203	.3494	1.0584	.0512	.0992	10.19
7.99	.8646	-.0859	.3116	.8114	.1002	.3390	.8456	-.0193	.3214	1.1518	.1557	.1936	7.98
8.01	.9820	-.2688	.2782	.8761	.1116	.3381	.9858	-.2827	.2760	1.3865	.3859	.3949	7.54
8.01	1.1612	-.5983	.2606	.9711	.1440	.3494	1.1575	-.5839	.2623	1.8426	.8159	.7663	6.35
8.02	1.3224	-.9294	.2269	1.0454	.1560	.3510	1.3158	-.9037	.2299	2.2995	1.2291	1.1202	6.29
8.03	1.4394	-1.2560	.1819	1.0880	.1681	.3391	1.4322	-1.2268	.1851	2.7519	1.6334	1.4668	5.83
8.05	1.5894	-1.5797	.0971	1.1153	.1791	.3202	1.5791	-1.5418	.1020	3.2149	2.0441	1.8216	7.04
7.97	1.9758	-2.5922	-.0923	1.2075	.2017	.2809	1.9616	-2.5406	-.0855	3.6524	3.2602	2.8976	7.40
8.00	2.5184	-3.9937	-.3085	1.3571	.2235	.2545	2.5134	-3.9756	-.3061	3.6422	4.9212	4.3742	7.40
RUN = 308													
-3.75	.2947	.0678	-.2676	.2947	.0678	-.2676	.2947	.0678	-.2676	1.0004	0.0000	0.0000	0.00
-2.03	.4263	.0715	-.1893	.4263	.0715	-.1893	.4263	.0715	-.1893	1.0005	0.0000	0.0000	0.00
-.01	.5725	.0819	-.0988	.5725	.0819	-.0988	.5725	.0819	-.0988	1.0005	0.0000	0.0000	0.00
1.97	.7392	.0990	.0045	.7392	.0990	.0045	.7392	.0990	.0045	1.0001	0.0000	0.0000	0.00
3.99	.9193	.1293	.1009	.9193	.1293	.1009	.9193	.1293	.1009	1.0000	0.0000	0.0000	0.00
6.02	1.1143	.1718	.2103	1.1143	.1718	.2103	1.1143	.1718	.2103	1.0000	0.0000	0.0000	0.00
7.97	1.2791	.2228	.3010	1.2791	.2228	.3010	1.2791	.2228	.3010	1.0000	0.0000	0.0000	0.00
10.06	1.4856	.2963	.4187	1.4856	.2963	.4187	1.4856	.2963	.4187	1.0000	0.0000	0.0000	0.00
12.06	1.6309	.3785	.5121	1.6309	.3785	.5121	1.6309	.3785	.5121	1.0000	0.0000	0.0000	0.00
13.98	1.7576	.4594	.6126	1.7576	.4594	.6126	1.7576	.4594	.6126	1.0000	0.0000	0.0000	0.00
16.01	1.8795	.5518	.7131	1.8795	.5518	.7131	1.8795	.5518	.7131	1.0000	0.0000	0.0000	0.00
17.99	1.9598	.6353	.8024	1.9598	.6353	.8024	1.9598	.6353	.8024	1.0000	0.0000	0.0000	0.00
19.98	2.0715	.7384	.9277	2.0715	.7384	.9277	2.0715	.7384	.9277	1.0000	0.0000	0.0000	0.00
22.02	2.1695	.8497	1.0476	2.1695	.8497	1.0476	2.1695	.8497	1.0476	1.0000	0.0000	0.0000	0.00
24.00	2.2569	.9720	1.1385	2.2569	.9720	1.1385	2.2569	.9720	1.1385	1.0000	0.0000	0.0000	0.00
RUN = 310													
-3.69	.6979	-.3705	-.4530	.5718	.1054	-.3299	.6988	-.3739	-.4538	1.5009	.4965	.4923	18.54
-1.95	.8814	-.3562	-.3522	.7415	.1124	-.2298	.8835	-.3632	-.3540	1.4970	.4926	.4890	18.57
-.02	1.0718	-.3270	-.2565	.9178	.1306	-.1356	1.0765	-.3408	-.2602	1.4884	.4853	.4828	18.61
2.00	1.2201	-.2944	-.1745	1.0503	.1567	-.0537	1.2256	-.3090	-.1784	1.4871	.4843	.4820	18.62
4.00	1.4179	-.2540	-.0669	1.2313	.1947	.0547	1.4220	-.2639	-.0695	1.4939	.4893	.4860	18.58
6.01	1.6089	-.1949	.0281	1.4076	.2445	.1491	1.6146	-.2075	.0247	1.4912	.4861	.4833	18.59
8.00	1.8206	-.1256	.1370	1.6041	.3066	.2581	1.8268	-.1380	.1336	1.4896	.4861	.4834	18.60
10.00	1.9937	-.0432	.2407	1.7624	.3809	.3617	2.0005	-.0557	.2371	1.4886	.4857	.4831	18.61
12.00	2.1304	.0588	.3374	1.9327	.4780	.4593	2.1854	.0504	.3350	1.4943	.4902	.4869	18.58
14.03	2.3960	.1711	.4387	2.1340	.5805	.5604	2.4018	.1620	.4360	1.4932	.4892	.4860	18.58
16.01	2.5896	.2989	.5242	2.3141	.6982	.6456	2.5963	.2892	.5213	1.4924	.4881	.4851	18.59
18.00	2.7400	.4216	.6138	2.4503	.8117	.7355	2.7466	.4127	.6110	1.4912	.4888	.4859	18.60
20.01	2.8651	.5586	.7276	2.5626	.9376	.8489	2.8726	.5492	.7245	1.4921	.4879	.4849	18.59
22.05	2.9548	.6932	.8576	2.6393	1.0609	.9789	2.9628	.6839	.8545	1.4926	.4876	.4845	18.59
24.03	3.0333	.8312	.9641	2.7054	1.1876	1.0853	3.0420	.8217	.9609	1.4909	.4871	.4843	18.59

TABLE 5.- CONTINUED.

VEO-WING 1/10-SCALE RESEARCH MODEL, VSTOL TEST NO. 204

ALPHA	CL	CD	CPM	CLE2	CDE2	CME2	CLCT	CDCT	CMCT	NPR	CT	CTRF	THETAJ
RUN = 311													
-3.60	1.0590	-.6485	-.5865	.6827	.1187	-.3158	1.0522	-.6348	-.5817	1.9533	.9164	.8545	29.73
-1.99	1.2202	-.6236	-.5095	.8234	.1308	-.2394	1.2141	-.6120	-.5053	1.9525	.9141	.8523	29.73
.01	1.4193	-.5872	-.4040	.9972	.1519	-.1343	1.4135	-.5770	-.4003	1.9499	.9126	.8512	29.72
1.99	1.6021	-.5379	-.3146	1.1568	.1830	-.0461	1.5979	-.5310	-.3120	1.9508	.9086	.8473	29.72
4.01	1.8241	-.4807	-.2112	1.3523	.2262	.0581	1.8183	-.4719	-.2078	1.9499	.9113	.8499	29.72
6.05	2.0511	-.4061	-.1125	1.5542	.2840	.1569	2.0448	-.3972	-.1090	1.9489	.9117	.8504	29.71
7.99	2.2441	-.3211	-.0252	1.7234	.3525	.2446	2.2367	-.3115	-.0213	1.9518	.9131	.8514	29.72
10.05	2.4678	-.2164	.0811	1.9231	.4381	.3508	2.4600	-.2071	.0849	1.9488	.9129	.8515	29.71
11.98	2.6835	-.0990	.1685	2.1202	.5332	.4367	2.6786	-.0935	.1708	1.9496	.9079	.8467	29.71
14.05	2.9329	.0307	.2584	2.3430	.6466	.5286	2.9237	.0403	.2626	1.9485	.9143	.8529	29.71
15.99	3.1440	.1766	.3570	2.5352	.7706	.6265	3.1360	.1844	.3606	1.9496	.9120	.8506	29.71
18.03	3.3355	.3334	.4611	2.7051	.9061	.7310	3.3265	.3416	.4650	1.9489	.9131	.8517	29.72
20.01	3.4733	.4931	.5596	2.8240	1.0434	.8293	3.4644	.5007	.5633	1.9487	.9125	.8511	29.71
22.11	3.6061	.6719	.6929	2.9360	1.1987	.9630	3.5959	.6798	.6970	1.9489	.9138	.8524	29.71
24.05	3.6783	.8317	.8110	2.9934	1.3337	1.0800	3.6704	.8374	.8141	1.9489	.9104	.8491	29.71
RUN = 312													
-3.54	1.3518	-1.1268	-.7815	.7311	.1213	-.3338	1.3357	-1.0944	-.7699	2.6498	1.5399	1.3938	29.99
-2.01	1.5077	-1.0999	-.7060	.8529	.1329	-.2577	1.4898	-1.0662	-.6937	2.6507	1.5421	1.3959	29.99
.00	1.7392	-1.0526	-.5969	1.0410	.1575	-.1483	1.7195	-1.0184	-.5842	2.6545	1.5438	1.3970	29.98
2.01	1.9504	-.9941	-.5024	1.2111	.1893	-.0543	1.9304	-.9622	-.4903	2.6534	1.5416	1.3953	29.98
4.00	2.1724	-.9202	-.4029	1.3934	.2352	.0446	2.1525	-.8906	-.3915	2.6498	1.5394	1.3934	29.99
6.02	2.4187	-.8385	-.2973	1.5955	.2941	.1524	2.3938	-.8042	-.2837	2.6497	1.5469	1.4003	29.99
8.09	2.6924	-.7264	-.1892	1.8327	.3709	.2585	2.6700	-.6978	-.1775	2.6532	1.5401	1.3940	29.98
10.02	2.8737	-.6194	-.1290	1.9761	.4500	.3194	2.8490	-.5899	-.1167	2.6495	1.5425	1.3962	29.99
12.04	3.1583	-.4831	-.0242	2.2257	.5515	.4231	3.1348	-.4570	-.0129	2.6494	1.5388	1.3929	29.99
14.04	3.4356	-.3336	.0725	2.4664	.6692	.5204	3.4101	-.3071	.0843	2.6498	1.5406	1.3946	29.99
16.04	3.6498	-.1698	.1659	2.6469	.7978	.6135	3.6240	-.1449	.1774	2.6496	1.5395	1.3935	29.99
18.03	3.8371	-.0021	.2639	2.8006	.9307	.7117	3.8099	.0224	.2756	2.6481	1.5404	1.3944	29.99
20.01	3.9999	.1752	.3733	2.9309	1.0724	.8216	3.9709	.1995	.3855	2.6492	1.5418	1.3956	29.99
22.13	4.1516	.3676	.5042	3.0473	1.2267	.9536	4.1189	.3930	.5175	2.6515	1.5457	1.3991	29.99
24.11	4.2418	.5503	.6256	3.1133	1.3672	1.0730	4.2132	.5710	.6370	2.6503	1.5390	1.3932	29.99

TABLE 5.- CONTINUED.

VEO-WING 1/10-SCALE RESEARCH MODEL,VSTOL TEST NO. 204

ALPHA	CL	CD	CPM	CLE2	CDE2	CME2	CLCT	CDCT	CMCT	NPR	CT	CTRF	THETAJ
RUN = 313													
-2.02	1.6650	-1.5132	-.8499	.8721	.1310	-.2860	1.6535	-1.4893	-.8417	3.2049	2.0295	1.8254	27.76
-.01	1.8938	-1.4727	-.7461	1.0404	.1533	-.1795	1.8764	-1.4395	-.7346	3.2172	2.0417	1.8364	27.70
2.01	2.1272	-1.4136	-.6405	1.2138	.1876	-.0717	2.1051	-1.3749	-.6268	3.2189	2.0495	1.8434	27.70
4.03	2.3647	-1.3304	-.5261	1.3980	.2325	.0410	2.3442	-1.2974	-.5141	3.2164	2.0432	1.8377	27.71
5.98	2.6145	-1.2456	-.4335	1.5913	.2897	.1357	2.5889	-1.2072	-.4193	3.2180	2.0512	1.8450	27.70
8.02	2.8463	-1.1360	-.3487	1.7709	.3597	.2198	2.8210	-1.1009	-.3353	3.2177	2.0481	1.8421	27.70
9.99	3.0901	-1.0165	-.2612	1.9644	.4404	.3070	3.0642	-.9830	-.2481	3.2176	2.0471	1.8412	27.70
12.03	3.3951	-.8665	-.1513	2.2219	.5449	.4150	3.3718	-.8385	-.1401	3.2166	2.0405	1.8353	27.71
14.03	3.6747	-.7087	-.0598	2.4523	.6618	.5069	3.6496	-.6805	-.0482	3.2183	2.0420	1.8365	27.70
16.07	3.9116	-.5358	.0443	2.6397	.7915	.6116	3.8844	-.5073	.0564	3.2165	2.0438	1.8383	27.71
18.08	4.1250	-.3502	.1605	2.8077	.9314	.7276	4.0970	-.3230	.1725	3.2171	2.0434	1.8379	27.71
20.08	4.2820	-.1677	.2551	2.9204	1.0671	.8224	4.2529	-.1413	.2672	3.2151	2.0436	1.8381	27.71
22.06	4.4353	.0254	.3723	3.0337	1.2116	.9389	4.4069	.0495	.3838	3.2167	2.0414	1.8362	27.70
24.04	4.5695	.2232	.4904	3.1291	1.3590	1.0565	4.5417	.2451	.5013	3.2164	2.0393	1.8343	27.70
RUN = 314													
8.01	1.2560	.2328	.2659	1.2560	.2328	.2659	1.2560	.2328	.2659	1.0000	0.0000	0.0000	0.00
8.04	1.3964	.1861	.2410	1.3093	.3267	.2868	1.3093	.3267	.2868	1.0556	.0487	.1654	23.75
8.06	1.5881	.1110	.2044	1.4615	.3433	.2748	1.5410	.1974	.2306	1.1513	.1592	.2646	20.50
8.02	1.7753	-.0476	.1394	1.5776	.3700	.2561	1.7806	-.0588	.1362	1.3885	.3895	.4620	17.31
8.07	2.1912	-.2471	.0039	1.7382	.4307	.2461	2.1865	-.2400	.0064	1.8317	.8084	.8152	25.69
8.06	2.4719	-.5032	-.1219	1.7955	.4418	.2352	2.4591	-.4854	-.1151	2.2949	1.2232	1.1621	27.53
8.02	2.6655	-.8055	-.2409	1.7856	.4286	.2316	2.6459	-.7781	-.2304	2.7605	1.6364	1.5157	27.47
8.03	2.8896	-1.1698	-.3535	1.8026	.4287	.2398	2.8887	-1.1685	-.3531	3.2842	2.1017	1.9331	26.18
7.98	3.5211	-2.0867	-.6778	1.8727	.4835	.2280	3.5206	-2.0859	-.6776	3.6836	3.3010	3.0534	24.69
8.00	4.4517	-3.2552	-1.1177	2.0008	.5477	.2277	4.4541	-3.2590	-1.1190	3.6532	4.8951	4.5243	24.80
RUN = 316													
.03	1.1172	-.3463	-.2388	.9360	.1731	-.0935	1.1202	-.3550	-.2413	1.4903	.4918	.5501	19.21
.08	1.4964	-.6156	-.3866	1.0857	.2017	-.1109	1.4849	-.5926	-.3788	1.9520	.9260	.9147	26.60
.01	1.9591	-1.5224	-.7222	1.1129	.1819	-.1355	1.9309	-1.4655	-.7026	3.2177	2.0690	1.9028	26.40
RUN = 317													
-.00	.6020	.0861	-.0784	.6020	.0861	-.0784	.6020	.0861	-.0784	1.0000	0.0000	0.0000	0.00
.01	1.1072	-.3478	-.2487	.9274	.1703	-.1041	1.1111	-.3590	-.2518	1.4867	.4895	.5484	19.13
.07	1.5060	-.6081	-.3816	1.0998	.2023	-.1086	1.4986	-.5934	-.3766	1.9440	.9166	.9064	26.56
.02	1.9216	-1.5024	-.7477	1.0781	.1915	-.1637	1.8980	-1.4550	-.7313	3.2008	2.0576	1.8924	26.45
RUN = 318													
.01	.5831	.0851	-.0898	.5831	.0851	-.0898	.5831	.0851	-.0898	1.0000	0.0000	0.0000	0.00
.01	1.0498	-.3455	-.2773	.8719	.1697	-.1338	1.0550	-.3607	-.2816	1.4836	.4857	.5450	19.05
-.01	1.4368	-.6071	-.4143	1.0327	.2018	-.1421	1.4306	-.5947	-.4101	1.9424	.9140	.9041	26.55
.01	1.9345	-1.5116	-.7350	1.0886	.1895	-.1489	1.9076	-1.4574	-.7163	3.2084	2.0658	1.8999	26.43
RUN = 319													
-.00	.5616	.0866	-.1063	.5616	.0866	-.1063	.5616	.0866	-.1063	1.0000	0.0000	0.0000	0.00
.01	1.0460	-.3405	-.2739	.8685	.1742	-.1307	1.0515	-.3566	-.2784	1.4821	.4848	.5444	19.02
-.00	1.3931	-.6017	-.4364	.9891	.2067	-.1643	1.3870	-.5895	-.4323	1.9439	.9138	.9037	26.56
.05	1.9350	-1.4883	-.7192	1.0960	.1914	-.1394	1.9180	-1.4543	-.7075	3.1873	2.0413	1.8776	26.49

TABLE 5.- CONTINUED.

VEO-WING 1/10-SCALE RESEARCH MODEL, VSTOL TEST NO. 204

ALPHA	CL	CD	CPM	CLE2	CDE2	CME2	CLCT	CDCT	CMCT	NPR	CT	CTRF	THETAJ
RUN = 320													
.01	.5795	.0841	-.0941	.5795	.0841	-.0941	.5795	.0841	-.0941	1.0000	0.0000	0.0000	0.00
.01	1.0453	-.3492	-.2783	.8642	.1713	-.1327	1.0481	-.3570	-.2805	1.4898	.4926	.5511	19.19
.01	1.4503	-.6154	-.4056	1.0429	.1987	-.1314	1.4411	-.5969	-.3994	1.9470	.9208	.9103	26.57
.02	1.9196	-1.5102	-.7388	1.0726	.1918	-.1523	1.8920	-1.4548	-.7197	3.2077	2.0674	1.9012	26.43
RUN = 321													
-.01	.5585	.0857	-.1120	.5585	.0857	-.1120	.5585	.0857	-.1120	1.0000	0.0000	0.0000	0.00
.00	1.0444	-.3435	-.2786	.8651	.1736	-.1342	1.0486	-.3556	-.2820	1.4868	.4885	.5473	19.13
.00	1.4095	-.6065	-.4221	1.0044	.2045	-.1491	1.4023	-.5920	-.4172	1.9419	.9164	.9065	26.55
.01	1.9625	-1.4991	-.7019	1.1211	.1912	-.1192	1.9409	-1.4556	-.6868	3.2005	2.0529	1.8881	26.45
RUN = 322													
8.02	1.3807	.2562	.3391	1.3807	.2562	.3391	1.3807	.2562	.3391	1.0000	0.0000	0.0000	0.00
8.03	1.9028	-.1318	.1550	1.6504	.3580	.3007	1.9064	-.1388	.1529	1.4911	.4929	.5510	19.23
8.04	2.3244	-.3330	-.0247	1.8113	.4116	.2475	2.3166	-.3217	-.0206	1.9403	.9138	.9042	26.54
8.03	2.9489	-1.1662	-.3405	1.8711	.4077	.2473	2.9624	-1.1859	-.3479	3.2248	2.0740	1.9075	26.37
RUN = 323													
8.03	1.3288	.2549	.3091	1.3288	.2549	.3091	1.3288	.2549	.3091	1.0000	0.0000	0.0000	0.00
8.05	1.8648	-.1260	.1280	1.6154	.3607	.2721	1.8712	-.1385	.1243	1.4834	.4875	.5463	19.08
8.03	2.2988	-.3324	-.0281	1.7830	.4154	.2456	2.2882	-.3169	-.0224	1.9467	.9190	.9085	26.57
8.04	2.9016	-1.1463	-.3426	1.8329	.4093	.2399	2.8744	-1.1067	-.3277	3.2015	2.0523	1.8874	26.45
RUN = 324													
8.00	1.2808	.2515	.2897	1.2808	.2515	.2897	1.2808	.2515	.2897	1.0000	0.0000	0.0000	0.00
8.04	1.8634	-.1258	.1318	1.6137	.3612	.2761	1.8694	-.1376	.1283	1.4851	.4882	.5474	19.10
8.00	2.2552	-.3316	-.0393	1.7424	.4139	.2331	2.2474	-.3203	-.0351	1.9361	.9138	.9048	26.52
8.01	2.8652	-1.1348	-.3442	1.8039	.4077	.2344	2.8466	-1.1077	-.3341	3.1771	2.0358	1.8724	26.52
RUN = 325													
8.04	1.2939	.2529	.2983	1.2939	.2529	.2983	1.2939	.2529	.2983	1.0000	0.0000	0.0000	0.00
8.03	1.8154	-.1328	.1046	1.5675	.3518	.2479	1.8230	-.1478	.1001	1.4827	.4850	.5444	19.06
8.04	2.2804	-.3368	-.0268	1.7627	.4134	.2477	2.2681	-.3191	-.0204	1.9448	.9218	.9114	26.57
8.04	2.8488	-1.1358	-.3445	1.7865	.4075	.2342	2.8295	-1.1077	-.3339	3.1856	2.0371	1.8735	26.50
RUN = 326													
4.03	1.0482	.1575	.1544	1.0482	.1575	.1544	1.0482	.1575	.1544	1.0000	0.0000	0.0000	0.00
4.01	.9930	.1595	.1199	.9930	.1595	.1199	.9930	.1595	.1199	1.0000	0.0000	0.0000	0.00
3.98	.9498	.1592	.1102	.9498	.1592	.1102	.9498	.1592	.1102	1.0000	0.0000	0.0000	0.00
3.98	.9331	.1581	.1014	.9331	.1581	.1014	.9331	.1581	.1014	1.0000	0.0000	0.0000	0.00
3.97	.9247	.1599	.0955	.9247	.1599	.0955	.9247	.1599	.0955	1.0000	0.0000	0.0000	0.00
3.98	.9043	.1601	.0831	.9043	.1601	.0831	.9043	.1601	.0831	1.0000	0.0000	0.0000	0.00
RUN = 327													
4.00	1.5365	-.2631	-.0340	1.3234	.2374	.1093	1.5433	-.2790	-.0386	1.4821	.4845	.5439	19.06
3.99	1.4808	-.2579	-.0667	1.2682	.2428	.0764	1.4876	-.2740	-.0713	1.4820	.4845	.5440	19.02
4.00	1.4547	-.2610	-.0758	1.2377	.2456	.0698	1.4580	-.2687	-.0780	1.4891	.4925	.5511	19.19
3.98	1.4245	-.2586	-.0912	1.2090	.2453	.0535	1.4291	-.2693	-.0943	1.4882	.4896	.5480	19.18
4.00	1.4108	-.2597	-.0903	1.1949	.2448	.0545	1.4151	-.2698	-.0932	1.4881	.4902	.5488	19.16
4.01	1.4610	-.2600	-.0627	1.2442	.2460	.0827	1.4647	-.2686	-.0652	1.4879	.4917	.5503	19.18

TABLE 5.- CONTINUED.

VEO-WING 1/10-SCALE RESEARCH MODEL, VSTOL TEST NO. 204

ALPHA	CL	CD	CPM	CLE2	CDE2	CME2	CLCT	CDCT	CMCT	NPR	CT	CTRF	THETAJ
RUN = 328													
4.02	1.9431	-.5063	-.1950	1.4807	.2765	.0789	1.9335	-.4900	-.1892	1.9424	.9192	.9092	26.56
4.00	1.8865	-.4980	-.2127	1.4263	.2818	.0599	1.8790	-.4852	-.2082	1.9405	.9150	.9054	26.55
4.00	1.8755	-.4916	-.2105	1.4153	.2883	.0621	1.8678	-.4787	-.2060	1.9402	.9151	.9055	26.54
4.00	1.8617	-.4921	-.2208	1.4016	.2875	.0517	1.8542	-.4793	-.2164	1.9410	.9149	.9052	26.55
3.99	1.8258	-.4947	-.2309	1.3659	.2849	.0417	1.8183	-.4820	-.2265	1.9409	.9148	.9051	26.55
3.98	1.8202	-.4991	-.2346	1.3586	.2834	.0390	1.8109	-.4834	-.2291	1.9426	.9185	.9085	26.55
RUN = 329													
4.02	2.4484	-1.3525	-.5033	1.4955	.2644	.0764	2.4295	-1.3204	-.4918	3.1867	2.0406	1.8768	26.49
4.00	2.3781	-1.3451	-.5370	1.4275	.2698	.0416	2.3607	-1.3155	-.5264	3.1882	2.0373	1.8739	26.49
3.99	2.3740	-1.3507	-.5281	1.4199	.2702	.0527	2.3530	-1.3149	-.5153	3.1890	2.0452	1.8809	26.49
3.99	2.3551	-1.3489	-.5403	1.4012	.2713	.0404	2.3346	-1.3140	-.5278	3.1850	2.0441	1.8801	26.50
3.98	2.3578	-1.3578	-.5404	1.3988	.2722	.0436	2.3316	-1.3133	-.5245	3.1889	2.0562	1.8912	26.49
3.99	2.3532	-1.3431	-.5342	1.4022	.2732	.0449	2.3350	-1.3122	-.5232	3.1893	2.0390	1.8753	26.48
RUN = 330													
12.02	1.5984	.3974	.4956	1.5984	.3974	.4956	1.5984	.3974	.4956	1.0000	0.0000	0.0000	0.00
12.01	1.6180	.4014	.5121	1.6180	.4014	.5121	1.6180	.4014	.5121	1.0000	0.0000	0.0000	0.00
12.02	1.5763	.3940	.4857	1.5763	.3940	.4857	1.5763	.3940	.4857	1.0000	0.0000	0.0000	0.00
RUN = 331													
12.04	2.1804	.0529	.3196	1.8943	.5241	.4653	2.1843	.0465	.3176	1.4922	.4933	.5513	19.23
12.01	2.1610	.0432	.3177	1.8742	.5160	.4639	2.1640	.0382	.3162	1.4919	.4948	.5530	19.23
12.02	2.1651	.0448	.3284	1.8780	.5175	.4747	2.1679	.0403	.3270	1.4941	.4953	.5530	19.26
RUN = 332													
12.11	2.7319	-.0913	.1773	2.1702	.6118	.4481	2.7264	-.0844	.1799	1.9361	.9088	.8999	26.51
12.05	2.6650	-.1114	.1470	2.0975	.5990	.4208	2.6529	-.0962	.1528	1.9454	.9197	.9093	26.57
12.05	2.6721	-.1073	.1456	2.1048	.6034	.4194	2.6600	-.0921	.1514	1.9450	.9197	.9093	26.55
RUN = 333													
12.10	3.4226	-.8641	-.1409	2.2509	.6048	.4393	3.3979	-.8331	-.1286	3.1907	2.0432	1.8791	26.48
12.04	3.3744	-.8763	-.1654	2.2031	.5939	.4153	3.3492	-.8446	-.1529	3.1844	2.0440	1.8797	26.51
12.04	3.3650	-.8732	-.1551	2.1977	.5916	.4236	3.3439	-.8468	-.1447	3.1815	2.0367	1.8731	26.51
RUN = 334													
-2.00	.2788	.0413	-.1614	.2788	.0413	-.1614	.2788	.0413	-.1614	1.0011	0.0000	0.0000	0.00
.02	.4363	.0484	-.0694	.4363	.0484	-.0694	.4363	.0484	-.0694	1.0005	0.0000	0.0000	0.00
1.99	.5956	.0609	.0293	.5956	.0609	.0293	.5956	.0609	.0293	1.0001	0.0000	0.0000	0.00
4.01	.7604	.0848	.1278	.7604	.0848	.1278	.7604	.0848	.1278	1.0000	0.0000	0.0000	0.00
6.01	.9343	.1178	.2371	.9343	.1178	.2371	.9343	.1178	.2371	1.0000	0.0000	0.0000	0.00
8.05	1.1098	.1673	.3323	1.1098	.1673	.3323	1.1098	.1673	.3323	1.0000	0.0000	0.0000	0.00
10.02	1.2859	.2269	.4344	1.2859	.2269	.4344	1.2859	.2269	.4344	1.0000	0.0000	0.0000	0.00
12.04	1.4476	.3038	.5380	1.4476	.3038	.5380	1.4476	.3038	.5380	1.0000	0.0000	0.0000	0.00
14.05	1.5959	.3901	.6404	1.5959	.3901	.6404	1.5959	.3901	.6404	1.0000	0.0000	0.0000	0.00
16.05	1.7183	.4779	.7391	1.7183	.4779	.7391	1.7183	.4779	.7391	1.0000	0.0000	0.0000	0.00
18.09	1.8170	.5665	.8382	1.8170	.5665	.8382	1.8170	.5665	.8382	1.0000	0.0000	0.0000	0.00
20.03	1.9193	.6589	.9469	1.9193	.6589	.9469	1.9193	.6589	.9469	1.0000	0.0000	0.0000	0.00
22.04	2.0190	.7657	1.0593	2.0190	.7657	1.0593	2.0190	.7657	1.0593	1.0000	0.0000	0.0000	0.00
24.07	2.1240	.8904	1.1555	2.1240	.8904	1.1555	2.1240	.8904	1.1555	1.0000	0.0000	0.0000	0.00

TABLE 5.- CONTINUED.

VEO-WING 1/10-SCALE RESEARCH MODEL, VSTOL TEST NO. 204

ALPHA	CL	CD	CPM	CLE2	CDE2	CME2	CLCT	CDCT	CMCT	NPR	CT	CTRF	THETAJ
RUN = 336													
-3.68	.3707	-.4165	-.3627	.2632	.0540	-.2520	.3733	-.4279	-.3654	1.4862	.4881	.4826	16.55
-2.01	.5123	-.4099	-.2902	.3910	.0572	-.1794	.5152	-.4211	-.2928	1.4878	.4883	.4825	16.56
-.01	.7094	-.3976	-.1894	.5718	.0658	-.0785	.7125	-.4079	-.1918	1.4878	.4892	.4834	16.56
1.97	.8853	-.3767	-.1000	.7317	.0818	.0109	.8887	-.3870	-.1025	1.4861	.4889	.4835	16.55
3.99	1.0787	-.3437	.0011	.9085	.1101	.1123	1.0820	-.3525	-.0011	1.4885	.4905	.4847	16.57
6.01	1.2896	-.2980	.1110	1.1038	.1488	.2221	1.2935	-.3074	.1087	1.4889	.4897	.4839	16.57
8.01	1.4547	-.2413	.1902	1.2540	.1975	.3010	1.4595	-.2518	.1876	1.4887	.4883	.4825	16.57
10.05	1.6777	-.1639	.3098	1.4608	.2689	.4209	1.6821	-.1728	.3075	1.4892	.4900	.4841	16.57
12.03	1.8661	-.0755	.4041	1.6349	.3487	.5150	1.8714	-.0852	.4016	1.4882	.4888	.4831	16.56
14.06	2.0918	.0321	.5030	1.8450	.4492	.6142	2.0967	.0238	.5008	1.4877	.4902	.4846	16.56
16.01	2.2826	.1513	.5821	2.0222	.5591	.6931	2.2882	.1426	.5797	1.4874	.4895	.4839	16.56
18.05	2.4499	.2717	.6673	2.1746	.6705	.7736	2.4553	.2639	.6652	1.4884	.4904	.4846	16.56
20.05	2.6146	.4099	.7772	2.3265	.7976	.8880	2.6213	.4009	.7746	1.4875	.4886	.4830	16.56
22.03	2.7411	.5425	.8838	2.4383	.9219	.9952	2.7467	.5355	.8318	1.4866	.4909	.4854	16.56
24.08	2.8459	.6879	.9904	2.5323	1.0534	1.1009	2.8542	.6782	.9874	1.4864	.4871	.4815	16.55
RUN = 337													
-3.60	.5578	-.7486	-.4586	.3329	.0709	-.2638	.5544	-.7361	-.4556	1.9433	.9140	.8493	18.95
-2.02	.7186	-.7417	-.3866	.4703	.0744	-.1911	.7139	-.7264	-.3829	1.9411	.9172	.8530	18.94
-.00	.9530	-.7160	-.2719	.6774	.0872	-.0772	.9490	-.7045	-.2691	1.9405	.9131	.8491	18.94
2.01	1.1331	-.6898	-.1887	.8280	.1069	.0069	1.1273	-.6746	-.1850	1.9435	.9175	.8531	18.95
3.99	1.3500	-.6489	-.0843	1.0171	.1378	.1115	1.3432	-.6328	-.0803	1.9446	.9188	.8542	18.95
6.01	1.5613	-.6010	.0122	1.1993	.1768	.2088	1.5524	-.5817	.0170	1.9474	.9229	.8579	18.96
7.98	1.7635	-.5338	.0970	1.3741	.2325	.2940	1.7530	-.5131	.1023	1.9512	.9251	.8596	18.96
9.99	2.0018	-.4413	.2026	1.5878	.3070	.3986	1.9927	-.4249	.2069	1.9511	.9202	.8551	18.96
12.08	2.2542	-.3316	.2955	1.8120	.4033	.4921	2.2433	-.3134	.3004	1.9495	.9228	.8577	18.96
14.08	2.5103	-.2106	.3883	2.0431	.5078	.5847	2.4991	-.1934	.3930	1.9499	.9221	.8569	18.96
16.05	2.7282	-.0741	.4654	2.2361	.6285	.6620	2.7159	-.0566	.4703	1.9493	.9230	.8579	18.96
18.03	2.9099	.0681	.5395	2.3962	.7503	.7353	2.8994	.0819	.5435	1.9459	.9186	.8540	18.95
20.06	3.1251	.2387	.6535	2.5895	.8999	.8486	3.1162	.2496	.6567	1.9425	.9151	.8510	18.94
22.08	3.2958	.4027	.7812	2.7363	1.0459	.9767	3.2855	.4145	.7848	1.9424	.9168	.8525	18.94
24.06	3.4084	.5647	.8802	2.8265	1.1886	1.0758	3.3974	.5766	.8839	1.9427	.9174	.8531	18.94

TABLE 5.- CONTINUED.

VEO-WING 1/10-SCALE RESEARCH MODEL, VSTOL TEST NO. 204

ALPHA	CL	CD	CPM	CLE2	CDE2	CME2	CLCT	CDCT	CMCT	NPR	CT	CTRF	THETAJ
RUN = 338													
-3.59	.8311	-1.2719	-.5671	.4607	.0683	-.2482	.8215	-1.2372	-.5589	2.6298	1.5399	1.3904	19.04
-2.04	.9732	-1.2543	-.5087	.5667	.0763	-.1895	.9625	-1.2191	-.5002	2.6270	1.5408	1.3914	19.04
-.01	1.1737	-1.2264	-.4298	.7189	.0930	-.1096	1.1604	-1.1875	-.4204	2.6272	1.5455	1.3955	19.04
2.03	1.4313	-1.1851	-.3145	.9294	.1178	.0058	1.4163	-1.1462	-.3049	2.6266	1.5462	1.3962	19.04
4.03	1.6551	-1.1285	-.2060	1.1095	.1531	.1135	1.6401	-1.0932	-.1972	2.6290	1.5425	1.3928	19.04
6.07	1.8869	-1.0597	-.1150	1.2955	.2027	.2049	1.8701	-1.0237	-.1058	2.6292	1.5440	1.3941	19.04
8.08	2.1433	-.9672	-.0117	1.5110	.2675	.3065	2.1283	-.9380	-.0042	2.6292	1.5363	1.3872	19.04
10.05	2.3911	-.8733	.0749	1.7145	.3432	.3943	2.3728	-.8404	.0836	2.6302	1.5417	1.3920	19.04
12.09	2.6788	-.7537	.1656	1.9584	.4394	.4853	2.6586	-.7201	.1746	2.6291	1.5435	1.3937	19.04
14.00	2.9514	-.6244	.2487	2.1914	.5441	.5685	2.9299	-.5914	.2578	2.6285	1.5436	1.3938	19.04
16.18	3.2222	-.4581	.3490	2.4183	.6808	.6688	3.1994	-.4258	.3581	2.6281	1.5438	1.3940	19.04
18.15	3.4525	-.2973	.4395	2.6087	.8150	.7598	3.4273	-.2641	.4491	2.6297	1.5462	1.3961	19.04
20.22	3.6566	-.1124	.5403	2.7749	.9665	.8600	3.6320	-.0823	.5493	2.6278	1.5430	1.3934	19.04
22.20	3.8149	.0618	.6361	2.8957	1.1107	.9561	3.7884	.0920	.6454	2.6278	1.5445	1.3947	19.04
24.13	3.9733	.2588	.7487	3.0219	1.2733	1.0677	3.9485	.2854	.7570	2.6291	1.5403	1.3908	19.04
RUN = 339													
-3.63	.9273	-1.6844	-.7110	.4343	.0613	-.2788	.9212	-1.6626	-.7056	3.1635	2.0253	1.8140	19.40
-1.97	1.1328	-1.6863	-.6467	.5797	.0667	-.2061	1.1185	-1.6411	-.6353	3.1937	2.0529	1.8382	19.48
-.01	1.3894	-1.6527	-.5417	.7752	.0842	-.1000	1.3722	-1.6042	-.5294	3.1952	2.0575	1.8423	19.48
2.03	1.6257	-1.5969	-.4323	.9535	.1093	.0072	1.6099	-1.5567	-.4219	3.1937	2.0482	1.8338	19.47
4.10	1.8632	-1.5347	-.3259	1.1289	.1478	.1142	1.8452	-1.4934	-.3152	3.1948	2.0502	1.8358	19.48
6.01	2.0647	-1.4631	-.2423	1.2761	.1914	.1968	2.0468	-1.4254	-.2323	3.1886	2.0466	1.8328	19.47
8.05	2.3417	-1.3730	-.1546	1.4915	.2582	.2865	2.3192	-1.3299	-.1430	3.1954	2.0543	1.8395	19.48
10.08	2.6591	-1.2520	-.0384	1.7556	.3412	.4006	2.6391	-1.2166	-.0287	3.1930	2.0454	1.8315	19.48
12.09	2.9320	-1.1311	.0501	1.9712	.4326	.4900	2.9087	-1.0932	.0608	3.1936	2.0496	1.8353	19.48
14.11	3.2039	-.9812	.1459	2.1956	.5383	.5822	3.1858	-.9540	.1537	3.1846	2.0365	1.8236	19.45
16.09	3.4781	-.8258	.2411	2.4097	.6687	.6815	3.4512	-.7882	.2522	3.1933	2.0517	1.8372	19.48
18.20	3.7200	-.6482	.3318	2.5948	.8084	.7732	3.6897	-.6089	.3437	3.1949	2.0554	1.8406	19.48
20.14	3.9392	-.4643	.4326	2.7657	.9532	.8738	3.9077	-.4263	.4444	3.1945	2.0551	1.8402	19.48
22.20	4.1378	-.2590	.5470	2.9186	1.1109	.9863	4.1093	-.2270	.5573	3.1891	2.0478	1.8339	19.47
24.23	4.2984	-.0606	.6410	3.0289	1.2672	1.0814	4.2664	-.0272	.6521	3.1952	2.0517	1.8371	19.48

TABLE 5.- CONTINUED.

VEO-WING 1/10-SCALE RESEARCH MODEL, VSTOL TEST NO. 204

ALPHA	CL	CD	CPM	CLE2	CDE2	CME2	CLCT	CDCT	CMCT	NPR	CT	CTRF	THETAJ
RUN = 341													
-3.76	.1451	.0409	-.2489	.1451	.0409	-.2489	.1451	.0409	-.2489	1.0019	0.0000	0.0000	0.00
-2.01	.2871	.0387	-.1576	.2871	.0387	-.1576	.2871	.0387	-.1576	1.0016	0.0000	0.0000	0.00
-.01	.4423	.0447	-.0703	.4423	.0447	-.0703	.4423	.0447	-.0703	1.0020	0.0000	0.0000	0.00
2.02	.5842	.0588	.0201	.5842	.0588	.0201	.5842	.0588	.0201	1.0012	0.0000	0.0000	0.00
3.97	.7586	.0827	.1237	.7586	.0827	.1237	.7586	.0827	.1237	1.0005	0.0000	0.0000	0.00
5.99	.9284	.1132	.2311	.9284	.1132	.2311	.9284	.1132	.2311	1.0000	0.0000	0.0000	0.00
8.05	1.1105	.1619	.3318	1.1105	.1619	.3318	1.1105	.1619	.3318	1.0000	0.0000	0.0000	0.00
10.07	1.2764	.2201	.4314	1.2764	.2201	.4314	1.2764	.2201	.4314	1.0000	0.0000	0.0000	0.00
12.00	1.4411	.2898	.5352	1.4411	.2898	.5352	1.4411	.2898	.5352	1.0000	0.0000	0.0000	0.00
14.09	1.5989	.3714	.6435	1.5989	.3714	.6435	1.5989	.3714	.6435	1.0000	0.0000	0.0000	0.00
16.04	1.7194	.4579	.7370	1.7194	.4579	.7370	1.7194	.4579	.7370	1.0000	0.0000	0.0000	0.00
18.02	1.8169	.5461	.8275	1.8169	.5461	.8275	1.8169	.5461	.8275	1.0000	0.0000	0.0000	0.00
20.06	1.9264	.6486	.9376	1.9264	.6486	.9376	1.9264	.6486	.9376	1.0000	0.0000	0.0000	0.00
22.06	2.0285	.7559	1.0535	2.0285	.7559	1.0535	2.0285	.7559	1.0535	1.0000	0.0000	0.0000	0.00
24.07	2.1173	.8750	1.1377	2.1173	.8750	1.1377	2.1173	.8750	1.1377	1.0000	0.0000	0.0000	0.00
RUN = 343													
-3.70	.3670	-.4236	-.3641	.2591	.0493	-.2528	.3690	-.4324	-.3661	1.4879	.4908	.4851	16.56
-2.01	.5041	-.4162	-.2947	.3832	.0503	-.1840	.5072	-.4281	-.2975	1.4833	.4376	.4824	16.53
-.00	.6978	-.3977	-.1904	.5617	.0514	-.0805	.7023	-.4129	-.1940	1.4824	.4340	.4789	16.52
2.06	.8983	-.3816	-.0912	.7416	.0327	.0212	.8995	-.3351	-.0921	1.4918	.4963	.4900	16.59
4.04	1.0888	-.3439	.0059	.9172	.1120	.1177	1.0911	-.3501	.0043	1.4909	.4933	.4871	16.58
6.05	1.2370	-.3033	.0810	1.0491	.1475	.1931	1.2391	-.3033	.0797	1.4905	.4945	.4884	16.58
8.06	1.4431	-.2409	.1827	1.2408	.2004	.2941	1.4467	-.2487	.1808	1.4889	.4914	.4855	16.57
10.03	1.6627	-.1660	.3019	1.4450	.2684	.4134	1.6663	-.1732	.3001	1.4900	.4918	.4858	16.58
12.04	1.8657	-.0779	.4027	1.6331	.3484	.5141	1.8697	-.0853	.4008	1.4890	.4915	.4856	16.57
14.09	2.0826	.0273	.4950	1.8350	.4451	.6065	2.0869	.0200	.4931	1.4880	.4915	.4857	16.56
16.06	2.2814	.1441	.5842	2.0202	.5524	.6955	2.2866	.1361	.5821	1.4868	.4904	.4847	16.55
18.08	2.4595	.2682	.6789	2.1836	.6675	.7903	2.4645	.2609	.6769	1.4872	.4910	.4854	16.56
20.07	2.6059	.3982	.7748	2.3172	.7866	.8859	2.6121	.3899	.7725	1.4865	.4896	.4840	16.55
22.02	2.7260	.5287	.8819	2.4229	.9086	.9934	2.7311	.5222	.8800	1.4873	.4917	.4860	16.56
24.08	2.8494	.6816	1.0035	2.5345	1.0486	1.1145	2.8565	.6733	1.0010	1.4851	.4890	.4836	16.55

TABLE 5.- CONTINUED.

VEO-WING 1/10-SCALE RESEARCH MODEL, VSTOL TEST NO. 204

ALPHA	CL	CD	CPM	CLE2	CDE2	CME2	CLCT	CDCT	CMCT	NPR	CT	CTRF	THETAJ
RUN = 344													
-3.62	.5915	-.7642	-.4358	.3653	.0610	-.2397	.5865	-.7457	-.4314	1.9475	.9206	.8556	18.95
-2.00	.7553	-.7543	-.3617	.5056	.0650	-.1654	.7495	-.7353	-.3572	1.9462	.9214	.8565	18.95
.00	.9252	-.7307	-.2850	.6467	.0801	-.0884	.9185	-.7111	-.2802	1.9472	.9224	.8573	18.95
2.05	1.1391	-.7018	-.1817	.8318	.0988	.0149	1.1316	-.6824	-.1769	1.9451	.9224	.8575	18.95
4.06	1.3599	-.6590	-.0719	1.0251	.1292	.1244	1.3521	-.6408	-.0674	1.9465	.9213	.8564	18.95
6.07	1.5777	-.6035	.0275	1.2149	.1740	.2242	1.5687	-.5843	.0324	1.9455	.9228	.8579	18.95
8.05	1.7901	-.5299	.1217	1.4017	.2324	.3178	1.7816	-.5132	.1260	1.9447	.9201	.8556	18.95
10.04	2.0001	-.4435	.2054	1.5857	.3043	.4014	1.9912	-.4276	.2096	1.9450	.9196	.8550	18.95
12.01	2.2466	-.3406	.3000	1.8063	.3933	.4962	2.2367	-.3242	.3044	1.9452	.9206	.8558	18.95
14.00	2.5023	-.2220	.3891	2.0361	.4974	.5856	2.4911	-.2048	.3938	1.9454	.9221	.8573	18.95
16.00	2.7193	-.0887	.4736	2.2287	.6132	.6699	2.7081	-.0726	.4781	1.9450	.9211	.8563	18.95
18.02	2.9118	.0550	.5529	2.3965	.7397	.7493	2.8996	.0712	.5575	1.9442	.9218	.8570	18.95
20.03	3.1191	.2169	.6594	2.5801	.8830	.8558	3.1064	.2325	.6640	1.9441	.9216	.8569	18.95
22.06	3.2638	.3789	.7592	2.7001	1.0271	.9561	3.2492	.3958	.7643	1.9456	.9240	.8590	18.95
24.06	3.4011	.5510	.8801	2.8158	1.1784	1.0768	3.3866	.5665	.8850	1.9439	.9228	.8580	18.95
RUN = 345													
-3.57	.7758	-1.2864	-.5918	.4037	.0586	-.2716	.7647	-1.2462	-.5822	2.6283	1.5462	1.3955	19.04
-2.00	.9584	-1.2714	-.5139	.5495	.0631	-.1937	.9462	-1.2314	-.5043	2.6272	1.5464	1.3957	19.04
-.04	1.1855	-1.2406	-.4133	.7312	.0788	-.0931	1.1720	-1.2015	-.4037	2.6246	1.5459	1.3954	19.04
2.00	1.3956	-1.2035	-.3212	.8945	.0994	-.0010	1.3805	-1.1642	-.3116	2.6280	1.5466	1.3959	19.04
4.02	1.6227	-1.1487	-.2159	1.0765	.1345	.1040	1.6067	-1.1112	-.2066	2.6276	1.5451	1.3946	19.04
6.04	1.8832	-1.0818	-.1116	1.2919	.1818	.2085	1.8657	-1.0444	-.1021	2.6281	1.5457	1.3951	19.04
7.99	2.1086	-.9962	-.0240	1.4764	.2431	.2952	2.0916	-.9629	-.0154	2.6272	1.5414	1.3913	19.04
10.11	2.3771	-.8889	.0686	1.7000	.3251	.3875	2.3595	-.8574	.0769	2.6250	1.5400	1.3901	19.04
12.02	2.6391	-.7780	.1514	1.9214	.4137	.4706	2.6198	-.7461	.1600	2.6277	1.5413	1.3911	19.04
14.05	2.9080	-.6491	.2366	2.1469	.5193	.5565	2.8859	-.6152	.2459	2.6237	1.5448	1.3945	19.04
16.06	3.1594	-.4947	.3283	2.3588	.6446	.6478	3.1373	-.4632	.3371	2.6260	1.5427	1.3925	19.04
18.05	3.3871	-.3327	.4159	2.5474	.7781	.7354	3.3639	-.3021	.4247	2.6247	1.5425	1.3924	19.04
20.03	3.6011	-.1545	.5197	2.7242	.9256	.8389	3.5776	-.1255	.5283	2.6261	1.5413	1.3912	19.04
22.05	3.7776	.0228	.6270	2.8604	1.0748	.9472	3.7502	.0543	.6366	2.6284	1.5462	1.3956	19.04
24.06	3.9279	.2117	.7295	2.9754	1.2297	1.0493	3.9003	.2411	.7387	2.6262	1.5446	1.3941	19.04

TABLE 5.- CONTINUED.

VEO-WING 1/10-SCALE RESEARCH MODEL,VSTOL TEST NO. 204

ALPHA	CL	CD	CPM	CLE2	CDE2	CME2	CLCT	CDCT	CMCT	NPR	CT	CTRF	THETAJ
RUN = 346													
-3.53	.9312	-1.7122	-.7133	.4300	.0460	-.2763	.9208	-1.6757	-.7042	3.1843	2.0425	1.8283	19.44
-2.04	1.1097	-1.6873	-.6422	.5650	.0533	-.2070	1.0997	-1.6553	-.6342	3.1759	2.0374	1.8239	19.42
.05	1.3570	-1.6464	-.5330	.7510	.0690	-.0992	1.3473	-1.6191	-.5261	3.1730	2.0323	1.8193	19.41
2.10	1.5868	-1.5984	-.4320	.9205	.0928	.0012	1.5768	-1.5730	-.4254	3.1705	2.0306	1.8178	19.40
4.09	1.8190	-1.5344	-.3215	1.0961	.1300	.1105	1.8094	-1.5122	-.3157	3.1659	2.0270	1.8146	19.39
6.06	2.0501	-1.4731	-.2393	1.2649	.1753	.1960	2.0348	-1.4409	-.2308	3.1746	2.0398	1.8259	19.41
8.04	2.3498	-1.3790	-.1283	1.5094	.2395	.3063	2.3345	-1.3495	-.1204	3.1707	2.0372	1.8237	19.40
9.99	2.5655	-1.2773	-.0567	1.6718	.3092	.3773	2.5506	-1.2509	-.0495	3.1702	2.0338	1.8209	19.41
12.03	2.8640	-1.1613	.0395	1.9073	.4016	.4776	2.8419	-1.1253	.0496	3.1866	2.0472	1.8325	19.45
14.05	3.1380	-1.0163	.1319	2.1311	.5069	.5677	3.1186	-.9868	.1404	3.1757	2.0395	1.8259	19.42
16.07	3.4062	-.8502	.2322	2.3501	.6319	.6660	3.3892	-.8262	.2392	3.1718	2.0329	1.8199	19.41
18.06	3.6549	-.6708	.3359	2.5523	.7690	.7674	3.6410	-.6527	.3414	3.1616	2.0255	1.8135	19.38
20.02	3.8531	-.4937	.4206	2.7018	.9072	.8523	3.8386	-.4761	.4260	3.1659	2.0254	1.8133	19.39
22.08	4.0735	-.2989	.5332	2.8662	1.0668	.9677	4.0522	-.2748	.5409	3.1698	2.0360	1.8229	19.40
24.10	4.2530	-.0889	.6494	3.0038	1.2279	1.0816	4.2362	-.0711	.6553	3.1662	2.0274	1.8150	19.39
RUN = 347													
8.02	1.1589	.1086	.2901	1.1117	.1926	.3148	1.1117	.1926	.3148	1.0518	.0476	.0964	21.29
8.02	1.2592	.0066	.2395	1.1752	.1842	.2849	1.2280	.0725	.2564	1.1501	.1589	.1965	17.29
8.05	1.4172	-.1524	.1982	1.2618	.1998	.2862	1.4273	-.1752	.1925	1.3708	.3757	.3850	15.76
8.10	1.7442	-.4327	.1304	1.4029	.2456	.3045	1.7406	-.4255	.1323	1.8262	.8086	.7594	18.61
8.12	1.9463	-.7398	.0354	1.4353	.2536	.2917	1.9365	-.7206	.0403	2.2709	1.2236	1.1171	19.11
8.03	2.0943	-1.0541	-.0619	1.4292	.2490	.2736	2.0843	-1.0345	-.0568	2.7244	1.6244	1.4630	19.01
7.99	2.3443	-1.3676	-.1257	1.5064	.2499	.3084	2.3300	-1.3400	-.1183	3.1686	2.0347	1.8217	19.40
8.04	2.8974	-2.3403	-.4214	1.5710	.2577	.2735	2.8719	-2.2904	-.4081	3.6100	3.2627	2.9169	19.00
8.00	3.6508	-3.6304	-.7964	1.6651	.2590	.2453	3.6569	-3.6425	-.7996	3.5870	4.8848	4.3669	19.05
RUN = 348													
-3.77	.1214	.0439	-.2545	.1214	.0439	-.2545	.1214	.0439	-.2545	1.0016	0.0000	0.0000	0.00
-1.96	.2892	.0419	-.1565	.2892	.0419	-.1565	.2892	.0419	-.1565	1.0020	0.0000	0.0000	0.00
-.04	.4188	.0494	-.0801	.4188	.0494	-.0801	.4188	.0494	-.0801	1.0012	0.0000	0.0000	0.00
1.98	.5955	.0617	.0281	.5955	.0617	.0281	.5955	.0617	.0281	1.0008	0.0000	0.0000	0.00
3.98	.7561	.0855	.1232	.7561	.0855	.1232	.7561	.0855	.1232	1.0001	0.0000	0.0000	0.00
6.05	.9250	.1199	.2285	.9250	.1199	.2285	.9250	.1199	.2285	1.0000	0.0000	0.0000	0.00
8.05	1.1236	.1675	.3441	1.1236	.1675	.3441	1.1236	.1675	.3441	1.0000	0.0000	0.0000	0.00
9.98	1.2763	.2248	.4325	1.2763	.2248	.4325	1.2763	.2248	.4325	1.0000	0.0000	0.0000	0.00
12.05	1.4551	.3057	.5479	1.4551	.3057	.5479	1.4551	.3057	.5479	1.0000	0.0000	0.0000	0.00
12.10	1.4535	.3120	.5429	1.4535	.3120	.5429	1.4535	.3120	.5429	1.0000	0.0000	0.0000	0.00
14.01	1.5979	.3881	.6388	1.5979	.3881	.6388	1.5979	.3881	.6388	1.0000	0.0000	0.0000	0.00
16.02	1.7259	.4772	.7410	1.7259	.4772	.7410	1.7259	.4772	.7410	1.0000	0.0000	0.0000	0.00
17.98	1.8160	.5597	.8354	1.8160	.5597	.8354	1.8160	.5597	.8354	1.0000	0.0000	0.0000	0.00
20.01	1.9231	.6552	.9504	1.9231	.6552	.9504	1.9231	.6552	.9504	1.0000	0.0000	0.0000	0.00
22.05	2.0186	.7617	1.0606	2.0186	.7617	1.0606	2.0186	.7617	1.0606	1.0000	0.0000	0.0000	0.00
24.05	2.1265	.8894	1.1577	2.1265	.8894	1.1577	2.1265	.8894	1.1577	1.0000	0.0000	0.0000	0.00

TABLE 5.- CONTINUED.

VEO-WING 1/10-SCALE RESEARCH MODEL,VSTOL TEST NO. 204

ALPHA	CL	CD	CPM	CLE2	CDE2	CME2	CLCT	CDCT	CMCT	NPR	CT	CTRF	THETAJ
RUN = 349													
-3.77	.1467	.0420	-.2430	.1467	.0420	-.2430	.1467	.0420	-.2430	1.0012	0.0000	0.0000	0.00
-2.10	.2888	.0397	-.1549	.2888	.0397	-.1549	.2888	.0397	-.1549	1.0008	0.0000	0.0000	0.00
-.01	.4391	.0466	-.0673	.4391	.0466	-.0673	.4391	.0466	-.0673	1.0014	0.0000	0.0000	0.00
1.98	.5874	.0619	.0213	.5874	.0619	.0213	.5874	.0619	.0213	1.0005	0.0000	0.0000	0.00
3.98	.7772	.0843	.1357	.7772	.0843	.1357	.7772	.0843	.1357	1.0000	0.0000	0.0000	0.00
5.98	.9184	.1159	.2246	.9184	.1159	.2246	.9184	.1159	.2246	1.0000	0.0000	0.0000	0.00
8.01	1.1138	.1656	.3367	1.1138	.1656	.3367	1.1138	.1656	.3367	1.0000	0.0000	0.0000	0.00
10.06	1.2802	.2237	.4322	1.2802	.2237	.4322	1.2802	.2237	.4322	1.0000	0.0000	0.0000	0.00
12.02	1.4447	.2906	.5409	1.4447	.2906	.5409	1.4447	.2906	.5409	1.0000	0.0000	0.0000	0.00
14.02	1.6078	.3747	.6450	1.6078	.3747	.6450	1.6078	.3747	.6450	1.0000	0.0000	0.0000	0.00
16.01	1.7247	.4625	.7398	1.7247	.4625	.7398	1.7247	.4625	.7398	1.0000	0.0000	0.0000	0.00
18.01	1.8040	.5423	.8185	1.8040	.5423	.8185	1.8040	.5423	.8185	1.0000	0.0000	0.0000	0.00
20.06	1.9205	.6454	.9330	1.9205	.6454	.9330	1.9205	.6454	.9330	1.0000	0.0000	0.0000	0.00
22.05	2.0309	.7534	1.0583	2.0309	.7534	1.0583	2.0309	.7534	1.0583	1.0000	0.0000	0.0000	0.00
24.11	2.1210	.8732	1.1453	2.1210	.8732	1.1453	2.1210	.8732	1.1453	1.0000	0.0000	0.0000	0.00
RUN = 351													
-3.65	.3656	-.4535	-.3886	.2505	.0543	-.2644	.3675	-.4618	-.3907	1.4959	.4919	.5206	16.42
-2.03	.5319	-.4500	-.3074	.4024	.0547	-.1830	.5339	-.4580	-.3094	1.4949	.4922	.5210	16.42
-.04	.7064	-.4350	-.2172	.5596	.0645	-.0929	.7089	-.4435	-.2193	1.4935	.4917	.5207	16.42
1.98	.9244	-.4132	-.1038	.7602	.0805	.0204	.9274	-.4220	-.1060	1.4930	.4912	.5202	16.42
4.05	1.0908	-.3749	-.0206	.9096	.1106	.1031	1.0949	-.3858	-.0234	1.4908	.4890	.5181	16.42
5.99	1.3142	-.3235	.0927	1.1182	.1521	.2155	1.3201	-.3377	.0891	1.4907	.4855	.5144	16.42
8.01	1.4923	-.2629	.1819	1.2798	.2050	.3046	1.4990	-.2776	.1781	1.4889	.4847	.5139	16.42
9.99	1.6946	-.1918	.2858	1.4654	.2698	.4088	1.7011	-.2049	.2823	1.4894	.4862	.5153	16.42
11.97	1.8701	-.1040	.3782	1.6235	.3523	.5020	1.8751	-.1133	.3757	1.4953	.4900	.5187	16.42
13.99	2.0583	-.0014	.4811	1.7949	.4475	.6053	2.0628	-.0090	.4789	1.4947	.4916	.5204	16.42
16.04	2.2341	.1109	.5817	1.9549	.5499	.7058	2.2390	.1033	.5795	1.4955	.4914	.5202	16.42
17.98	2.4495	.2417	.6788	2.1554	.6713	.8030	2.4544	.2346	.6767	1.4954	.4918	.5206	16.42
20.07	2.5912	.3819	.7817	2.2828	.7988	.9055	2.5975	.3733	.7792	1.4948	.4899	.5186	16.42
22.13	2.7138	.5203	.8908	2.3889	.9281	1.0153	2.7189	.5139	.8889	1.4933	.4923	.5214	16.42
24.04	2.8288	.6621	.9865	2.4921	1.0569	1.1104	2.8357	.6541	.9840	1.4941	.4900	.5188	16.42

TABLE 5.- CONTINUED.

VEO-WING 1/10-SCALE RESEARCH MODEL, VSTOL TEST NO. 204

ALPHA	CL	CD	CPM	CLE2	CDE2	CME2	CLCT	CDCT	CMCT	NPR	CT	CTRF	THETAJ
RUN = 352													
-3.68	.5789	-.8058	-.4909	.3295	.0740	-.2677	.5754	-.7934	-.4877	1.9466	.9129	.9144	19.51
-1.99	.7612	-.7991	-.4106	.4849	.0760	-.1867	.7563	-.7836	-.4067	1.9468	.9162	.9177	19.52
.01	.9799	-.7754	-.3114	.6734	.0890	-.0876	.9747	-.7608	-.3076	1.9458	.9154	.9171	19.52
1.99	1.1698	-.7449	-.2243	.8329	.1097	-.0001	1.1636	-.7291	-.2202	1.9466	.9169	.9186	19.52
4.11	1.4253	-.6976	-.0995	1.0582	.1419	.1241	1.4194	-.6840	-.0959	1.9463	.9148	.9163	19.51
6.00	1.5770	-.6411	-.0337	1.1846	.1809	.1886	1.5730	-.6326	-.0314	1.9473	.9094	.9109	19.52
7.96	1.8179	-.5704	.0677	1.3965	.2401	.2906	1.8125	-.5599	.0706	1.9457	.9118	.9135	19.52
9.99	2.0401	-.4807	.1738	1.5896	.3154	.3970	2.0336	-.4693	.1770	1.9456	.9131	.9148	19.51
12.07	2.2583	-.3719	.2791	1.7784	.4086	.5027	2.2506	-.3594	.2827	1.9460	.9147	.9163	19.51
13.99	2.4676	-.2567	.3791	1.9624	.5063	.6025	2.4601	-.2454	.3825	1.9469	.9135	.9151	19.52
16.00	2.6893	-.1210	.4709	2.1568	.6253	.6946	2.6805	-.1087	.4746	1.9457	.9152	.9168	19.51
18.07	2.9130	.0332	.5448	2.3533	.7603	.7687	2.9032	.0459	.5487	1.9472	.9160	.9175	19.52
20.06	3.1118	.2048	.6491	2.5294	.9095	.8722	3.1038	.2145	.6522	1.9447	.9126	.9143	19.51
22.01	3.2570	.3574	.7671	2.6482	1.0451	.9913	3.2458	.3701	.7712	1.9461	.9168	.9184	19.52
24.05	3.3859	.5340	.8687	2.7558	1.1967	1.0919	3.3771	.5432	.8718	1.9442	.9127	.9145	19.51
RUN = 353													
-3.65	.7867	-1.3658	-.6511	.3638	.0707	-.2829	.7730	-1.3364	-.6436	2.6311	1.5314	1.4975	20.05
-2.02	.9902	-1.3514	-.5649	.5264	.0726	-.1967	.9307	-1.3221	-.5574	2.6275	1.5315	1.4976	20.06
-.00	1.2004	-1.3195	-.4828	.6869	.0871	-.1146	1.1099	-1.2907	-.4753	2.6294	1.5313	1.4974	20.06
2.02	1.4677	-1.2762	-.3721	.9051	.1106	-.0041	1.4565	-1.2486	-.3647	2.6288	1.5305	1.4966	20.06
4.01	1.6773	-1.2194	-.2853	1.0686	.1440	.0818	1.6666	-1.1954	-.2788	2.6297	1.5269	1.4931	20.06
6.00	1.9301	-1.1625	-.1911	1.2686	.1901	.1791	1.9130	-1.1276	-.1815	2.6295	1.5397	1.5057	20.06
7.99	2.1698	-1.0703	-.0960	1.4654	.2520	.2724	2.1551	-1.0426	-.0883	2.6282	1.5321	1.4982	20.06
9.98	2.4432	-.9642	.0226	1.6926	.3340	.3913	2.4267	-.9358	.0306	2.6299	1.5336	1.4996	20.06
11.99	2.6652	-.8446	.1084	1.8711	.4241	.4764	2.6494	-.8193	.1157	2.6276	1.5305	1.4967	20.06
14.04	2.9062	-.7121	.1938	2.0645	.5315	.5630	2.8867	-.6833	.2023	2.6304	1.5356	1.5016	20.06
16.04	3.1332	-.5570	.2926	2.2533	.6496	.6598	3.1175	-.5355	.2992	2.6289	1.5272	1.4934	20.06
18.01	3.4005	-.3843	.3848	2.4785	.7929	.7525	3.3830	-.3620	.3918	2.6272	1.5290	1.4953	20.06
20.04	3.6256	-.1991	.4862	2.6624	.9448	.8539	3.6072	-.1773	.4932	2.6270	1.5292	1.4954	20.06
22.01	3.8130	-.0210	.5887	2.8073	1.0933	.9578	3.7901	.0044	.5971	2.6278	1.5350	1.5011	20.06
24.08	3.9752	.1907	.7107	2.9340	1.2635	1.0783	3.9556	.2109	.7176	2.6273	1.5288	1.4951	20.06

TABLE 5.- CONTINUED.

VEO-WING 1/10-SCALE RESEARCH MODEL, VSTOL TEST NO. 204

ALPHA	CL	CD	CPM	CLE2	CDE2	CME2	CLCT	CDCT	CMCT	NPR	CT	CTRF	THETAJ
RUN = 354													
-3.61	.9403	-1.8480	-.7773	.3703	.0644	-.2766	.9270	-1.8034	-.7656	3.2046	2.0478	1.9956	20.21
-2.04	1.1221	-1.8239	-.7054	.5014	.0686	-.2063	1.1088	-1.7834	-.6947	3.1952	2.0437	1.9917	20.20
.00	1.3838	-1.7775	-.5971	.7000	.0813	-.1009	1.3729	-1.7479	-.5892	3.1942	2.0323	1.9805	20.20
2.04	1.6448	-1.7373	-.4988	.8932	.1019	-.0012	1.6305	-1.7023	-.4893	3.1912	2.0388	1.9869	20.19
4.09	1.9147	-1.6765	-.3946	1.0962	.1379	.1040	1.8977	-1.6387	-.3842	3.1930	2.0425	1.9905	20.20
6.03	2.1573	-1.5943	-.2997	1.2818	.1833	.1965	2.1428	-1.5650	-.2915	3.1938	2.0336	1.9816	20.19
7.98	2.4000	-1.5071	-.2208	1.4616	.2449	.2771	2.3818	-1.4731	-.2111	3.1941	2.0396	1.9875	20.20
10.00	2.6585	-1.3929	-.1207	1.6608	.3216	.3762	2.6411	-1.3630	-.1121	3.1937	2.0355	1.9836	20.20
11.99	2.9409	-1.2607	-.0271	1.8845	.4178	.4696	2.9227	-1.2317	-.0186	3.1927	2.0351	1.9833	20.19
14.03	3.2142	-1.1204	.0616	2.0944	.5256	.5604	3.1907	-1.0858	.0721	3.1951	2.0429	1.9908	20.20
16.01	3.4743	-.9530	.1617	2.3018	.6487	.6590	3.4530	-.9239	.1707	3.1937	2.0369	1.9850	20.20
18.05	3.7317	-.7731	.2576	2.5006	.7893	.7556	3.7068	-.7416	.2676	3.1906	2.0412	1.9891	20.19
20.11	3.9642	-.5702	.3548	2.6806	.9427	.8518	3.9415	-.5435	.3635	3.1932	2.0360	1.9841	20.19
22.09	4.1726	-.3624	.4400	2.8372	1.1059	.9371	4.1485	-.3359	.4490	3.1923	2.0367	1.9848	20.19
24.07	4.3693	-.1487	.5594	2.9828	1.2737	1.0569	4.3432	-.1220	.5688	3.1925	2.0383	1.9864	20.19
RUN = 355													
8.03	1.1234	.1651	.3259	1.1234	.1651	.3259	1.1234	.1651	.3259	1.0000	0.0000	0.0000	0.00
8.03	1.1589	.1094	.2856	1.1161	.1980	.3101	1.1161	.1980	.3101	1.0547	.0457	.0983	17.74
8.05	1.2770	.0063	.2405	1.1908	.1931	.2883	1.2459	.0738	.2578	1.1524	.1566	.2057	16.72
8.07	1.4618	-.1646	.1903	1.2897	.2119	.2896	1.4718	-.1864	.1846	1.3776	.3781	.4140	16.50
8.10	1.7860	-.4690	.0823	1.4156	.2588	.2808	1.7823	-.4617	.0843	1.8298	.8081	.8167	18.87
8.13	2.0247	-.7997	-.0193	1.4524	.2629	.2740	2.0133	-.7785	-.0134	2.2918	1.2245	1.2069	20.18
8.15	2.2097	-1.1457	-.1111	1.4605	.2591	.2774	2.1957	-1.1195	-.1039	2.7405	1.6305	1.5921	19.92
8.02	2.3833	-1.4851	-.2275	1.4491	.2566	.2671	2.3703	-1.4610	-.2207	3.1869	2.0281	1.9764	20.18
8.05	2.9595	-2.5381	-.5353	1.4910	.2858	.2533	2.9336	-2.4884	-.5214	3.6256	3.2574	3.1830	19.43
8.02	3.7721	-3.8932	-.9510	1.5801	.3161	.2262	3.7459	-3.8429	-.9369	3.6003	4.8580	4.7458	19.48
RUN = 356													
-3.81	-.1442	.0397	-.1790	-.1442	.0397	-.1790	-.1442	.0397	-.1790	1.0052	0.0000	0.0000	0.00
-2.02	.0173	.0286	-.0823	.0173	.0286	-.0823	.0173	.0286	-.0823	1.0054	0.0000	0.0000	0.00
-.04	.1519	.0272	-.0073	.1519	.0272	-.0073	.1519	.0272	-.0073	1.0048	0.0000	0.0000	0.00
1.99	.3323	.0328	.0977	.3323	.0328	.0977	.3323	.0328	.0977	1.0049	0.0000	0.0000	0.00
4.03	.4874	.0460	.2010	.4874	.0460	.2010	.4874	.0460	.2010	1.0043	0.0000	0.0000	0.00
6.04	.6531	.0722	.3070	.6531	.0722	.3070	.6531	.0722	.3070	1.0041	0.0000	0.0000	0.00
8.01	.8118	.1055	.3958	.8118	.1055	.3958	.8118	.1055	.3958	1.0037	0.0000	0.0000	0.00
10.04	1.0080	.1579	.5065	1.0080	.1579	.5065	1.0080	.1579	.5065	1.0032	0.0000	0.0000	0.00
12.04	1.1682	.2241	.5974	1.1682	.2241	.5974	1.1682	.2241	.5974	1.0031	0.0000	0.0000	0.00
13.98	1.3213	.2922	.6879	1.3213	.2922	.6879	1.3213	.2922	.6879	1.0031	0.0000	0.0000	0.00
16.05	1.4669	.3747	.7880	1.4669	.3747	.7880	1.4669	.3747	.7880	1.0031	0.0000	0.0000	0.00
18.04	1.5878	.4577	.8873	1.5878	.4577	.8873	1.5878	.4577	.8873	1.0028	0.0000	0.0000	0.00
20.05	1.6926	.5439	.9833	1.6926	.5439	.9833	1.6926	.5439	.9833	1.0024	0.0000	0.0000	0.00
22.09	1.8062	.6484	1.0884	1.8062	.6484	1.0884	1.8062	.6484	1.0884	1.0014	0.0000	0.0000	0.00
24.07	1.9216	.7709	1.1812	1.9216	.7709	1.1812	1.9216	.7709	1.1812	1.0000	0.0000	0.0000	0.00

TABLE 5.- CONTINUED.

VEO-WING 1/10-SCALE RESEARCH MODEL, VSTOL TEST NO. 204

ALPHA	CL	CD	CPM	CLE2	CDE2	CME2	CLCT	CDCT	CMCT	NPR	CT	CTRF	THETAJ
RUN = 358													
-3.82	-.1072	-.4694	-.2690	-.1373	.0509	-.1949	-.1071	-.4723	-.2694	1.5044	.4972	.5211	7.13
-2.03	.0957	-.4802	-.1624	.0495	.0382	-.0884	.0960	-.4839	-.1630	1.5033	.4964	.5204	7.13
.03	.2767	-.4650	-.0754	.2136	.0378	-.0032	.2791	-.4843	-.0782	1.4871	.4815	.5068	7.11
2.01	.4935	-.4593	.0255	.4125	.0450	.0983	.4959	-.4742	.0234	1.4899	.4856	.5107	7.12
4.01	.6412	-.4415	.1023	.5424	.0613	.1753	.6438	-.4547	.1004	1.4898	.4872	.5124	7.12
5.97	.8419	-.4106	.2036	.7262	.0869	.2813	.8453	-.4253	.2064	1.4896	.4857	.5108	7.12
8.00	1.0304	-.3676	.3026	.8975	.1245	.3752	1.0346	-.3832	.3003	1.4893	.4846	.5097	7.11
10.02	1.2397	-.3094	.4004	1.0894	.1782	.4731	1.2443	-.3244	.3982	1.4889	.4851	.5103	7.11
12.00	1.4469	-.2314	.4997	1.2798	.2507	.5724	1.4521	-.2463	.4975	1.4888	.4851	.5103	7.11
14.06	1.6419	-.1451	.6005	1.4569	.3325	.6734	1.6468	-.1577	.5986	1.4912	.4872	.5122	7.12
16.04	1.8233	-.0506	.6919	1.6218	.4207	.7649	1.8284	-.0625	.6900	1.4925	.4877	.5126	7.12
18.00	2.0073	.0574	.7658	1.7897	.5217	.8388	2.0127	.0459	.7639	1.4920	.4879	.5128	7.12
20.01	2.2087	.1915	.8726	1.9757	.6463	.9454	2.2153	.1785	.8705	1.4915	.4861	.5110	7.12
22.04	2.3611	.3207	.9732	2.1111	.7688	1.0463	2.3673	.3097	.9714	1.4905	.4880	.5132	7.12
24.08	2.5204	.4770	1.0738	2.2565	.9128	1.1464	2.5288	.4631	1.0715	1.4908	.4846	.5095	7.12
RUN = 359													
-3.80	-.0504	-.8446	-.2918	-.0902	.0605	-.1927	-.0510	-.8299	-.2902	1.9462	.9148	.9060	6.31
-2.06	.1201	-.8508	-.2194	.0531	.0524	-.1203	.1191	-.8363	-.2178	1.9481	.9146	.9057	6.31
-.01	.3741	-.8476	-.1034	.2749	.0509	-.0045	.3727	-.8350	-.1020	1.9463	.9128	.9040	6.31
1.99	.5660	-.8359	-.0220	.4353	.0592	.0770	.5641	-.8227	-.0206	1.9460	.9135	.9046	6.32
4.05	.7755	-.8106	.0745	.6128	.0790	.1734	.7731	-.7978	.0759	1.9469	.9132	.9044	6.31
5.99	1.0032	-.7779	.1785	.8104	.1066	.2775	1.0003	-.7643	.1800	1.9463	.9140	.9053	6.31
8.00	1.2320	-.7251	.2791	1.0087	.1502	.3780	1.2291	-.7136	.2804	1.9454	.9120	.9033	6.32
10.01	1.4244	-.6651	.3606	1.1704	.2033	.4595	1.4206	-.6521	.3621	1.9486	.9137	.9047	6.30
12.07	1.6776	-.5747	.4699	1.3923	.2845	.5689	1.6731	-.5612	.4715	1.9491	.9144	.9054	6.30
14.04	1.8883	-.4836	.5582	1.5732	.3662	.6573	1.8831	-.4695	.5598	1.9476	.9152	.9063	6.31
16.00	2.1170	-.3729	.6493	1.7723	.4675	.7486	2.1105	-.3571	.6512	1.9485	.9172	.9082	6.31
18.09	2.3603	-.2308	.7223	1.9862	.5940	.8213	2.3543	-.2176	.7238	1.9484	.9146	.9057	6.31
20.08	2.5905	-.0809	.8196	2.1885	.7292	.9185	2.5846	-.0692	.8211	1.9480	.9132	.9043	6.31
22.09	2.7809	.0720	.9235	2.3502	.8684	1.0226	2.7742	.0844	.9250	1.9458	.9142	.9054	6.32
24.05	2.9512	.2358	1.0217	2.4932	1.0177	1.1209	2.9437	.2486	1.0234	1.9467	.9150	.9061	6.31

TABLE 5.- CONTINUED.

VEO-WING 1/10-SCALE RESEARCH MODEL, VSTOL TEST NO. 204

ALPHA	CL	CD	CPM	CLE2	CDE2	CME2	CLCT	CDCT	CMCT	NPR	CT	CTRF	THETAJ
RUN = 360													
-3.76	.0178	-1.4149	-.3464	-.0334	.0536	-.1944	.0169	-1.3897	-.3438	2.6273	1.5262	1.4693	5.76
-1.99	.2304	-1.4256	-.2627	.1335	.0448	-.1102	.2284	-1.3961	-.2596	2.6275	1.5307	1.4736	5.76
-.02	.4593	-1.4209	-.1755	.3117	.0474	-.0227	.4562	-1.3894	-.1722	2.6278	1.5329	1.4757	5.76
1.99	.6667	-1.4022	-.0969	.4675	.0603	.0558	.6624	-1.3706	-.0936	2.6278	1.5332	1.4761	5.76
4.08	.9464	-1.3726	.0163	.6940	.0815	.1690	.9409	-1.3412	.0196	2.6292	1.5331	1.4758	5.76
6.09	1.1960	-1.3265	.1200	.8931	.1162	.2726	1.1898	-1.2969	.1231	2.6293	1.5314	1.4741	5.76
8.00	1.4406	-1.2747	.2190	1.0893	.1588	.3718	1.4330	-1.2438	.2223	2.6282	1.5331	1.4759	5.76
10.00	1.6765	-1.1990	.3087	1.2758	.2202	.4614	1.6682	-1.1697	.3119	2.6256	1.5317	1.4746	5.76
12.02	1.9181	-1.1045	.3964	1.4685	.2973	.5488	1.9095	-1.0778	.3993	2.6271	1.5292	1.4721	5.76
16.04	2.4484	-.8646	.5728	1.9018	.5017	.7251	2.4382	-.8390	.5757	2.6257	1.5286	1.4716	5.76
18.02	2.6876	-.7265	.6382	2.0934	.6220	.7908	2.6757	-.6995	.6413	2.6261	1.5307	1.4736	5.76
20.05	2.9696	-.5483	.7351	2.3288	.7763	.8874	2.9577	-.5237	.7379	2.6247	1.5284	1.4714	5.76
22.06	3.2218	-.3676	.8401	2.5345	.9348	.9925	3.2085	-.3424	.8430	2.6246	1.5296	1.4726	5.76
24.04	3.4276	-.1744	.9286	2.6990	1.0978	1.0804	3.4167	-.1553	.9309	2.6240	1.5229	1.4661	5.76
RUN = 361													
-3.68	.0854	-1.9198	-.4533	-.0240	.0587	-.2106	.0868	-1.9448	-.4564	3.2419	2.0738	1.9815	6.84
-2.08	.3231	-1.9240	-.3684	.1589	.0521	-.1260	.3250	-1.9477	-.3713	3.2335	2.0751	1.9829	6.83
-.04	.5495	-1.8971	-.2881	.3175	.0546	-.0481	.5431	-1.8432	-.2815	3.2277	2.0568	1.9655	6.82
1.94	.8280	-1.8861	-.1850	.5274	.0660	.0561	.8183	-1.8230	-.1772	3.2258	2.0668	1.9751	6.82
4.05	1.0963	-1.8423	-.0840	.7264	.0872	.1555	1.0862	-1.7899	-.0775	3.2199	2.0558	1.9646	6.80
6.04	1.3580	-1.7953	.0190	.9217	.1194	.2582	1.3463	-1.7441	.0254	3.2200	2.0550	1.9638	6.80
8.05	1.6334	-1.7290	.1181	1.1305	.1688	.3573	1.6201	-1.6788	.1245	3.2173	2.0543	1.9632	6.80
9.99	1.8666	-1.6515	.1963	1.2995	.2279	.4354	1.8517	-1.6020	.2026	3.2164	2.0540	1.9631	6.80
12.00	2.1787	-1.5406	.2915	1.5476	.3137	.5299	2.1634	-1.4957	.2972	3.2153	2.0496	1.9587	6.79
14.06	2.4433	-1.4256	.3642	1.7450	.4068	.6031	2.4256	-1.3793	.3703	3.2159	2.0518	1.9610	6.80
16.11	2.7662	-1.2727	.4578	2.0033	.5335	.6965	2.7470	-1.2272	.4638	3.2156	2.0517	1.9608	6.79
18.05	3.0519	-1.1158	.5345	2.2272	.6659	.7734	3.0301	-1.0686	.5408	3.2152	2.0544	1.9633	6.79
20.09	3.3282	-.9360	.6251	2.4400	.8164	.8641	3.3041	-.8885	.6316	3.2136	2.0558	1.9647	6.79
22.03	3.5406	-.7515	.7014	2.5992	.9589	.9391	3.5208	-.7155	.7064	3.2173	2.0430	1.9523	6.79
23.98	3.8217	-.5442	.8038	2.8178	1.1417	1.0426	3.7957	-.5005	.8100	3.2141	2.0532	1.9622	6.79
RUN = 362													
8.01	.8364	.0271	.3719	.8061	.1307	.3859	.8061	.1307	.3859	1.0673	.0555	.1079	8.30
8.03	.9009	-.0760	.3513	.8480	.1218	.3756	.8818	-.0048	.3600	1.1555	.1563	.2047	6.95
8.04	1.0098	-.2683	.3080	.9038	.1264	.3657	1.0166	-.2939	.3043	1.3777	.3756	.4086	6.99
8.07	1.1775	-.6274	.2545	.9714	.1554	.3475	1.1749	-.6174	.2556	1.8377	.8103	.8094	6.68
8.05	1.3431	-.9918	.2273	1.0571	.1647	.3537	1.3373	-.9682	.2298	2.2848	1.2250	1.1913	5.84
8.02	1.4643	-1.3578	.1947	1.0911	.1661	.3581	1.4567	-1.3266	.1980	2.7415	1.6335	1.5690	5.74
8.05	1.6134	-1.7033	.1035	1.1183	.1760	.3378	1.6053	-1.6725	.1073	3.1880	2.0333	1.9435	6.71
7.96	1.9600	-2.7925	-.0707	1.1742	.1964	.3056	1.9516	-2.7605	-.0667	3.6114	3.2346	3.0904	6.77
8.04	2.4890	-4.2236	-.2728	1.3106	.2320	.2885	2.4832	-4.2016	-.2700	3.5834	4.8238	4.6088	6.78

TABLE 5.- CONTINUED.

VEO-WING 1/10-SCALE RESEARCH MODEL,VSTOL TEST NO. 204

ALPHA	CL	CD	CPM	CLE2	CDE2	CME2	CLCT	CDCT	CMCT	NPR	CT	CTRF	THETAJ
RUN = 363													
-3.77	.2867	.0694	-.2680	.2867	.0694	-.2680	.2867	.0694	-.2680	1.0000	0.0000	0.0000	0.00
-2.01	.4255	.0723	-.1790	.4255	.0723	-.1790	.4255	.0723	-.1790	1.0000	0.0000	0.0000	0.00
-.05	.5943	.0819	-.0830	.5943	.0819	-.0830	.5943	.0819	-.0830	1.0000	0.0000	0.0000	0.00
1.98	.7449	.0984	.0097	.7449	.0984	.0097	.7449	.0984	.0097	1.0000	0.0000	0.0000	0.00
4.00	.9219	.1297	.1060	.9219	.1297	.1060	.9219	.1297	.1060	1.0000	0.0000	0.0000	0.00
5.98	1.0861	.1697	.1979	1.0861	.1697	.1979	1.0861	.1697	.1979	1.0000	0.0000	0.0000	0.00
7.99	1.2988	.2281	.3094	1.2988	.2281	.3094	1.2988	.2281	.3094	1.0000	0.0000	0.0000	0.00
10.03	1.4710	.2949	.4078	1.4710	.2949	.4078	1.4710	.2949	.4078	1.0000	0.0000	0.0000	0.00
11.98	1.6266	.3735	.5105	1.6266	.3735	.5105	1.6266	.3735	.5105	1.0000	0.0000	0.0000	0.00
13.96	1.7671	.4560	.6226	1.7671	.4560	.6226	1.7671	.4560	.6226	1.0000	0.0000	0.0000	0.00
16.04	1.8702	.5444	.7143	1.8702	.5444	.7143	1.8702	.5444	.7143	1.0000	0.0000	0.0000	0.00
18.03	1.9492	.6281	.7978	1.9492	.6281	.7978	1.9492	.6281	.7978	1.0000	0.0000	0.0000	0.00
20.01	2.0690	.7318	.9327	2.0690	.7318	.9327	2.0690	.7318	.9327	1.0000	0.0000	0.0000	0.00
22.03	2.1707	.8439	1.0506	2.1707	.8439	1.0506	2.1707	.8439	1.0506	1.0000	0.0000	0.0000	0.00
24.01	2.2570	.9671	1.1432	2.2570	.9671	1.1432	2.2570	.9671	1.1432	1.0000	0.0000	0.0000	0.00
RUN = 366													
-3.71	.7273	-.3893	-.4535	.5696	.0957	-.3076	.7307	-.3998	-.4567	1.4957	.4893	.5099	21.71
-2.02	.8638	-.3744	-.3822	.6918	.1060	-.2362	.8674	-.3846	-.3853	1.4953	.4896	.5103	21.71
-.01	1.0377	-.3537	-.3000	.8476	.1240	-.1529	1.0402	-.3598	-.3019	1.4979	.4936	.5141	21.71
2.02	1.2490	-.3194	-.1866	1.0432	.1438	-.0403	1.2528	-.3280	-.1893	1.4972	.4910	.5114	21.71
4.01	1.4204	-.2765	-.0894	1.1986	.1841	.0570	1.4246	-.2852	-.0921	1.4966	.4907	.5113	21.71
6.01	1.6330	-.2191	.0075	1.3941	.2354	.1545	1.6364	-.2256	.0054	1.4970	.4929	.5135	21.71
7.98	1.8133	-.1481	.0992	1.5603	.2955	.2454	1.8183	-.1570	.0963	1.4969	.4902	.5107	21.71
10.10	2.0735	-.0493	.2365	1.8040	.3852	.3829	2.0786	-.0575	.2338	1.4970	.4903	.5113	21.71
12.03	2.2057	.0471	.3203	1.9213	.4729	.4668	2.2107	.0397	.3177	1.4960	.4914	.5121	21.71
14.01	2.3603	.1547	.4229	2.0612	.5705	.5695	2.3655	.1475	.4204	1.4957	.4914	.5122	21.71
16.04	2.5568	.2832	.5309	2.2420	.6897	.6780	2.5610	.2777	.5289	1.4954	.4933	.5141	21.71
16.00	2.5497	.2860	.5291	2.2368	.6906	.6755	2.5555	.2784	.5264	1.4956	.4908	.5115	21.71
18.09	2.7315	.4254	.6064	2.4034	.8192	.7531	2.7369	.4189	.6040	1.4962	.4919	.5125	21.71
20.05	2.8721	.5613	.7283	2.5326	.9415	.8742	2.8797	.5527	.7250	1.4950	.4890	.5097	21.71
22.07	2.9718	.6967	.8499	2.6178	1.0661	.9964	2.9784	.6898	.8472	1.4950	.4908	.5116	21.71
24.01	3.0604	.8391	.9437	2.6946	1.1957	1.0899	3.0678	.8318	.9407	1.4933	.4900	.5109	21.71
24.02	3.0645	.8397	.9508	2.6996	1.1953	1.0966	3.0729	.8315	.9474	1.4938	.4886	.5094	21.71

TABLE 5.- CONTINUED.

VEO-WING 1/10-SCALE RESEARCH MODEL, VSTOL TEST NO. 204

ALPHA	CL	CD	CPM	CLE2	CDE2	CME2	CLCT	CDCT	CMCT	NPR	CT	CTRF	THETAJ
RUN = 367													
-3.61	1.1067	-.6853	-.6425	.6947	.1164	-.3328	1.1002	-.6727	-.6377	1.9532	.9143	.9014	30.81
-1.92	1.2855	-.6667	-.5612	.8478	.1281	-.2496	1.2758	-.6492	-.5544	1.9504	.9202	.9074	30.76
.04	1.4838	-.6257	-.4638	1.0210	.1501	-.1535	1.4757	-.6121	-.4584	1.9502	.9160	.9033	30.77
2.04	1.6731	-.5789	-.3805	1.1817	.1823	-.0692	1.6630	-.5632	-.3741	1.9520	.9189	.9060	30.81
4.03	1.8966	-.5144	-.2719	1.3806	.2269	.0385	1.8875	-.5014	-.2664	1.9534	.9161	.9032	30.81
5.97	2.1430	-.4388	-.1675	1.6014	.2857	.1433	2.1327	-.4249	-.1616	1.9530	.9175	.9045	30.81
8.01	2.3778	-.3417	-.0642	1.8111	.3634	.2465	2.3671	-.3283	-.0583	1.9506	.9174	.9046	30.78
10.00	2.5450	-.2403	.0165	1.9533	.4451	.3276	2.5332	-.2265	.0227	1.9530	.9184	.9055	30.81
12.10	2.7644	-.1088	.1383	2.1489	.5540	.4490	2.7528	-.0962	.1442	1.9516	.9174	.9045	30.79
14.02	2.9683	.0207	.2428	2.3286	.6643	.5546	2.9542	.0350	.2497	1.9525	.9204	.9074	30.80
16.04	3.1624	.1754	.3367	2.5016	.7953	.6480	3.1488	.1882	.3431	1.9515	.9189	.9060	30.79
18.09	3.3541	.3400	.4149	2.6714	.9361	.7263	3.3399	.3525	.4214	1.9511	.9191	.9063	30.78
20.03	3.5107	.5054	.5352	2.8110	1.0758	.8453	3.4988	.5151	.5405	1.9510	.9156	.9028	30.78
22.02	3.6106	.6642	.6536	2.8892	1.2112	.9648	3.5963	.6751	.6598	1.9521	.9182	.9054	30.81
24.05	3.7140	.8394	.7707	2.9758	1.3596	1.0810	3.7012	.8484	.7761	1.9507	.9158	.9031	30.78
RUN = 368													
-3.54	1.4214	-1.1932	-.8695	.7176	.1051	-.3525	1.4067	-1.1660	-.8587	2.6294	1.5321	1.4768	32.00
-2.00	1.6034	-1.1631	-.7892	.8653	.1153	-.2724	1.5884	-1.1370	-.7786	2.6278	1.5312	1.4762	32.00
.06	1.8192	-1.1091	-.6941	1.0358	.1415	-.1776	1.8034	-1.0839	-.6838	2.6275	1.5308	1.4756	32.00
1.97	2.0473	-1.0513	-.5897	1.2248	.1690	-.0745	2.0330	-1.0301	-.5807	2.6255	1.5265	1.4715	32.01
3.97	2.2601	-.9820	-.5105	1.3911	.2156	.0074	2.2402	-.9546	-.4987	2.6326	1.5351	1.4796	31.99
6.08	2.5590	-.8832	-.3996	1.6465	.2814	.1183	2.5383	-.8567	-.3878	2.6309	1.5349	1.4795	32.00
7.98	2.7510	-.7750	-.3163	1.8059	.3522	.1987	2.7349	-.7558	-.3076	2.6273	1.5259	1.4710	32.00
10.05	3.0152	-.6491	-.1965	2.0263	.4475	.3204	2.9947	-.6264	-.1858	2.6290	1.5318	1.4767	32.00
12.03	3.2289	-.5056	-.0970	2.2070	.5514	.4177	3.2120	-.4881	-.0885	2.6298	1.5252	1.4702	32.00
14.06	3.4694	-.3513	-.0023	2.4056	.6739	.5149	3.4467	-.3294	.0088	2.6309	1.5328	1.4774	32.00
16.12	3.7106	-.1672	.1025	2.6118	.8180	.6191	3.6884	-.1472	.1130	2.6298	1.5309	1.4757	32.00
18.04	3.9307	.0152	.1974	2.8008	.9618	.7135	3.9092	.0332	.2073	2.6275	1.5291	1.4740	32.00
20.06	4.0936	.1971	.3007	2.9298	1.1043	.8173	4.0702	.2153	.3111	2.6293	1.5308	1.4756	32.00
21.99	4.2175	.3755	.4219	3.0215	1.2448	.9394	4.1910	.3947	.4333	2.6322	1.5339	1.4785	31.99
24.02	4.3325	.5789	.5482	3.1105	1.4025	1.0641	4.3095	.5944	.5579	2.6285	1.5287	1.4736	32.00

TABLE 5.- CONTINUED.

VEO-WING 1/10-SCALE RESEARCH MODEL, VSTOL TEST NO. 204

ALPHA	CL	CD	CPM	CLE2	CDE2	CME2	CLCT	CDCT	CMCT	NPR	CT	CTRF	THETAJ
RUN = 369													
-3.51	1.5885	-1.6700	-1.0069	.7279	.1004	-.3523	1.5672	-1.6261	-.9907	3.2115	2.0508	1.9684	29.43
-1.94	1.7812	-1.6293	-.9269	.8736	.1105	-.2735	1.7616	-1.5917	-.9128	3.1978	2.0442	1.9623	29.49
-.01	1.9770	-1.5690	-.8473	1.0153	.1328	-.1966	1.9598	-1.5386	-.8357	3.2003	2.0364	1.9547	29.48
1.96	2.2338	-1.5078	-.7463	1.2116	.1636	-.0940	2.2132	-1.4741	-.7331	3.2001	2.0411	1.9592	29.49
3.98	2.4681	-1.4227	-.6581	1.3899	.2089	-.0071	2.4483	-1.3928	-.6462	3.2012	2.0373	1.9556	29.48
6.04	2.7442	-1.3200	-.5538	1.6096	.2700	.0964	2.7248	-1.2927	-.5426	3.2020	2.0349	1.9533	29.48
7.97	3.0164	-1.2216	-.4557	1.8180	.3440	.2005	2.9848	-1.1804	-.4384	3.2052	2.0541	1.9716	29.46
10.02	3.2483	-1.0780	-.3576	2.0018	.4349	.2949	3.2225	-1.0467	-.3441	3.2042	2.0422	1.9602	29.47
11.98	3.5055	-.9257	-.2603	2.2095	.5419	.3913	3.4802	-.8971	-.2476	3.2051	2.0398	1.9579	29.46
14.01	3.7566	-.7660	-.1781	2.4050	.6611	.4757	3.7251	-.7326	-.1629	3.2098	2.0478	1.9656	29.44
16.00	4.0287	-.5696	-.0670	2.6318	.8044	.5851	4.0004	-.5418	-.0538	3.2035	2.0414	1.9594	29.47
18.05	4.2616	-.3714	.0341	2.8160	.9524	.6865	4.2319	-.3441	.0475	3.2032	2.0420	1.9601	29.47
20.01	4.4634	-.1753	.1360	2.9722	1.0979	.7889	4.4322	-.1487	.1496	3.1978	2.0427	1.9608	29.50
20.02	4.4600	-.1698	.1253	2.9685	1.1048	.7782	4.4279	-.1424	.1393	3.2041	2.0440	1.9619	29.47
22.06	4.6364	.0497	.2421	3.1016	1.2704	.8945	4.6041	.0754	.2559	3.2080	2.0430	1.9611	29.45
24.12	4.7748	.2687	.3842	3.1979	1.4322	1.0363	4.7427	.2924	.3974	3.2047	2.0415	1.9596	29.46
RUN = 370													
8.01	1.3992	.1817	.2325	1.3422	.2664	.2647	1.3422	.2664	.2647	1.0596	.0487	.1021	25.95
8.02	1.5754	.0911	.1868	1.4644	.2763	.2483	1.5299	.1670	.2120	1.1670	.1695	.2159	22.92
8.02	1.7862	-.0549	.1193	1.5801	.3020	.2382	1.7956	-.0712	.1139	1.3819	.3325	.4121	21.93
8.02	2.2465	-.2635	-.0619	1.7683	.3796	.2046	2.2431	-.2590	-.0601	1.8292	.8056	.3014	23.62
8.01	2.5809	-.5418	-.2222	1.8003	.3721	.1991	2.5370	-.5138	-.2093	2.3005	1.2379	1.2019	32.49
8.00	2.7870	-.8544	-.3430	1.7849	.3552	.2032	2.7675	-.8309	-.3323	2.7309	1.6317	1.5703	31.64
8.01	2.9855	-1.2132	-.4600	1.7879	.3534	.1952	2.9538	-1.1718	-.4427	3.2193	2.0543	1.9719	29.39
8.00	3.6435	-2.1588	-.8209	1.8534	.3738	.1521	3.6278	-2.1366	-.8124	3.6051	3.2283	3.1014	27.25
7.99	4.6954	-3.3798	-1.3497	2.0093	.4032	.1115	4.6788	-3.3564	-1.3406	3.5813	4.8299	4.6396	27.38
RUN = 371													
-3.78	.2861	.0695	-.2762	.2861	.0695	-.2762	.2861	.0695	-.2762	1.0000	0.0000	0.0000	0.00
-2.05	.4369	.0711	-.1792	.4369	.0711	-.1792	.4369	.0711	-.1792	1.0000	0.0000	0.0000	0.00
-.01	.6043	.0829	-.0821	.6043	.0829	-.0821	.6043	.0829	-.0821	1.0000	0.0000	0.0000	0.00
2.00	.7243	.1050	-.0071	.7243	.1050	-.0071	.7243	.1050	-.0071	1.0000	0.0000	0.0000	0.00
3.98	.9204	.1389	.1042	.9204	.1389	.1042	.9204	.1389	.1042	1.0000	0.0000	0.0000	0.00
6.02	1.0838	.1805	.2006	1.0838	.1805	.2006	1.0838	.1805	.2006	1.0000	0.0000	0.0000	0.00
8.03	1.2446	.2265	.3079	1.2446	.2265	.3079	1.2446	.2265	.3079	1.0000	0.0000	0.0000	0.00
10.03	1.4042	.2919	.4003	1.4042	.2919	.4003	1.4042	.2919	.4003	1.0000	0.0000	0.0000	0.00
12.00	1.5758	.3690	.5103	1.5758	.3690	.5103	1.5758	.3690	.5103	1.0000	0.0000	0.0000	0.00
14.05	1.7022	.4490	.6071	1.7022	.4490	.6071	1.7022	.4490	.6071	1.0000	0.0000	0.0000	0.00
16.04	1.8418	.5456	.7077	1.8418	.5456	.7077	1.8418	.5456	.7077	1.0000	0.0000	0.0000	0.00
18.11	1.9470	.6397	.8033	1.9470	.6397	.8033	1.9470	.6397	.8033	1.0000	0.0000	0.0000	0.00
20.03	2.0573	.7461	.9119	2.0573	.7461	.9119	2.0573	.7461	.9119	1.0000	0.0000	0.0000	0.00
22.02	2.1549	.8583	1.0257	2.1549	.8583	1.0257	2.1549	.8583	1.0257	1.0000	0.0000	0.0000	0.00
24.08	2.2315	.9860	1.1124	2.2315	.9860	1.1124	2.2315	.9860	1.1124	1.0000	0.0000	0.0000	0.00

TABLE 5.- CONTINUED.

VEO-WING 1/10-SCALE RESEARCH MODEL,VSTOL TEST NO. 204

ALPHA	CL	CD	CPM	CLE2	CDE2	CME2	CLCT	CDCT	CMCT	NPR	CT	CTRF	THETAJ
RUN = 373													
-3.74	.3355	-.0230	-.3149	.3057	.0646	-.2884	.3345	-.0200	-.3140	1.0000	.1036	.0926	22.51
-2.08	.4751	-.0205	-.2266	.4426	.0668	-.1999	.4738	-.0169	-.2256	1.0000	.1042	.0931	22.50
-.04	.6326	-.0092	-.1348	.5970	.0768	-.1081	.6311	-.0057	-.1337	1.0000	.1043	.0931	22.50
1.97	.7827	.0137	-.0428	.7439	.0989	-.0159	.7809	.0177	-.0416	1.0000	.1049	.0936	22.49
3.99	.9881	.0466	.0675	.9462	.1308	.0945	.9860	.0509	.0688	1.0000	.1053	.0941	22.49
6.05	1.2150	.0929	.1900	1.1699	.1758	.2171	1.2126	.0973	.1915	1.0000	.1057	.0943	22.49
8.00	1.3565	.1477	.2606	1.3087	.2289	.2876	1.3540	.1519	.2620	1.0000	.1054	.0941	22.49
10.02	1.5390	.2213	.3534	1.4887	.3003	.3803	1.5367	.2250	.3546	1.0000	.1049	.0937	22.49
12.00	1.7182	.3078	.4521	1.6651	.3851	.4790	1.7156	.3115	.4534	1.0000	.1050	.0938	22.49
14.01	1.8918	.4081	.5581	1.8361	.4834	.5849	1.8892	.4116	.5593	1.0000	.1049	.0936	22.49
16.04	2.0395	.5119	.6589	1.9810	.5852	.6858	2.0367	.5154	.6602	1.0000	.1051	.0938	22.49
18.02	2.1729	.6219	.7432	2.1122	.6929	.7700	2.1702	.6251	.7444	1.0000	.1047	.0935	22.49
20.03	2.2798	.7351	.8630	2.2166	.8041	.8898	2.2769	.7383	.8642	1.0000	.1043	.0936	22.49
22.07	2.3766	.8576	.9883	2.3109	.9243	1.0152	2.3735	.8607	.9896	1.0000	.1049	.0936	22.50
24.05	2.4640	.9860	1.0798	2.3964	1.0500	1.1065	2.4612	.9886	1.0809	1.0000	.1043	.0931	22.50
RUN = 374													
-3.70	.3950	-.0923	-.3373	.3416	.0776	-.2874	.3941	-.0896	-.3365	1.0000	.2032	.1780	21.13
-1.96	.5374	-.0848	-.2560	.4792	.0824	-.2064	.5368	-.0831	-.2555	1.0000	.2020	.1770	21.16
-.01	.6899	-.0700	-.1699	.6264	.0937	-.1207	.6898	-.0698	-.1699	1.0000	.2003	.1755	21.18
2.03	.8609	-.0505	-.0689	.7921	.1098	-.0199	.8612	-.0513	-.0692	1.0000	.1990	.1745	21.20
4.06	1.0602	-.0142	.0370	.9856	.1440	.0861	1.0604	-.0146	.0369	1.0000	.1995	.1749	21.18
6.10	1.2536	.0328	.1305	1.1718	.1920	.1806	1.2519	.0362	.1315	1.0000	.2043	.1789	21.11
8.04	1.4347	.0932	.2189	1.3475	.2496	.2691	1.4328	.0966	.2200	1.0000	.2045	.1791	21.10
10.12	1.6438	.1737	.3232	1.5505	.3277	.3736	1.6413	.1779	.3246	1.0000	.2056	.1800	21.09
12.05	1.8270	.2631	.4220	1.7284	.4143	.4725	1.8241	.2676	.4235	1.0000	.2062	.1805	21.09
14.08	1.9993	.3682	.5200	1.8955	.5156	.5705	1.9964	.3724	.5215	1.0000	.2059	.1802	21.08
16.01	2.1510	.4723	.6190	2.0419	.6167	.6696	2.1475	.4770	.6206	1.0000	.2067	.1809	21.08
18.00	2.3074	.5908	.7114	2.1932	.7315	.7621	2.3035	.5956	.7131	1.0000	.2071	.1813	21.08
20.07	2.4275	.7176	.8170	2.3082	.8542	.8677	2.4234	.7223	.8187	1.0000	.2072	.1813	21.07
22.03	2.5346	.8436	.9490	2.4103	.9765	.9999	2.5299	.8487	.9509	1.0000	.2079	.1820	21.06
24.12	2.6192	.9814	1.0402	2.4902	1.1096	1.0911	2.6144	.9862	1.0421	1.0000	.2078	.1818	21.06

TABLE 5.- CONTINUED.

VEO-WING 1/10-SCALE RESEARCH MODEL, VSTOL TEST NO. 204

ALPHA	CL	CD	CPM	CLE2	CDE2	CME2	CLCT	CDCT	CMCT	NPR	CT	CTRF	THETAJ
RUN = 375													
-3.68	.4854	-.2497	-.3752	.3922	.0753	-.2875	.4855	-.2500	-.3753	1.0000	.3996	.3381	19.69
-1.98	.6357	-.2420	-.2944	.5330	.0790	-.2068	.6361	-.2434	-.2947	1.0000	.3984	.3371	19.72
-.02	.7997	-.2275	-.2091	.6854	.0925	-.1209	.7992	-.2261	-.2087	1.0000	.4018	.3399	19.67
1.99	.9608	-.2091	-.1242	.8352	.1073	-.0358	.9600	-.2071	-.1236	1.0000	.4026	.3405	19.67
4.06	1.1739	-.1678	-.0168	1.0367	.1447	.0717	1.1727	-.1650	-.0160	1.0000	.4036	.3413	19.65
6.01	1.3746	-.1181	.0824	1.2268	.1898	.1709	1.3732	-.1151	.0832	1.0000	.4039	.3415	19.63
8.01	1.5645	-.0529	.1679	1.4058	.2501	.2565	1.5627	-.0495	.1689	1.0000	.4046	.3421	19.62
9.98	1.7483	.0287	.2545	1.5795	.3256	.3430	1.7467	.0316	.2554	1.0000	.4038	.3415	19.64
12.05	1.9620	.1310	.3667	1.7827	.4217	.4552	1.9602	.1339	.3676	1.0000	.4040	.3416	19.62
14.02	2.1249	.2311	.4446	1.9348	.5170	.5335	2.1220	.2355	.4460	1.0000	.4062	.3434	19.60
16.06	2.3082	.3516	.5567	2.1083	.6305	.6455	2.3053	.3557	.5580	1.0000	.4060	.3431	19.59
18.12	2.5078	.4909	.6667	2.2979	.7623	.7555	2.5047	.4949	.6680	1.0000	.4060	.3431	19.59
20.01	2.6178	.6100	.7525	2.3988	.8748	.8414	2.6143	.6143	.7539	1.0000	.4066	.3436	19.58
22.03	2.7191	.7407	.8532	2.4903	.9984	.9424	2.7147	.7456	.8550	1.0000	.4078	.3446	19.57
24.02	2.8521	.9014	.9786	2.6154	1.1500	1.0674	2.8485	.9052	.9799	1.0000	.4061	.3432	19.58
RUN = 376													
-3.65	.4957	-.3285	-.4159	.3936	.0760	-.3144	.4953	-.3268	-.4154	1.0000	.5021	.4172	17.82
-2.02	.6414	-.3172	-.3458	.5282	.0831	-.2447	.6412	-.3166	-.3456	1.0000	.5008	.4160	17.81
.01	.8393	-.3043	-.2316	.7118	.0930	-.1303	.8387	-.3024	-.2311	1.0000	.5023	.4172	17.78
1.95	1.0053	-.2795	-.1486	.8643	.1134	-.0472	1.0046	-.2775	-.1481	1.0000	.5026	.4175	17.80
3.98	1.2073	-.2426	-.0536	1.0523	.1462	.0479	1.2060	-.2395	-.0528	1.0000	.5040	.4185	17.76
6.01	1.4271	-.1872	.0469	1.2581	.1966	.1486	1.4254	-.1834	.0480	1.0000	.5050	.4193	17.75
8.04	1.6482	-.1144	.1418	1.4656	.2636	.2435	1.6462	-.1102	.1429	1.0000	.5056	.4198	17.74
10.03	1.8340	-.0315	.2355	1.6384	.3400	.3372	1.8318	-.0273	.2366	1.0000	.5056	.4198	17.75
12.01	2.0096	.0616	.3242	1.8015	.4257	.4258	2.0075	.0653	.3252	1.0000	.5051	.4193	17.74
14.02	2.2316	.1770	.4282	2.0108	.5339	.5299	2.2291	.1809	.4293	1.0000	.5057	.4197	17.73
16.05	2.3886	.2903	.5228	2.1551	.6396	.6246	2.3858	.2946	.5240	1.0000	.5062	.4202	17.73
18.13	2.5311	.4171	.6043	2.2855	.7567	.7059	2.5288	.4203	.6052	1.0000	.5047	.4191	17.75
20.02	2.6855	.5468	.7182	2.4285	.8788	.8199	2.6826	.5506	.7193	1.0000	.5057	.4198	17.73
22.09	2.8187	.6943	.8301	2.5492	1.0177	.9320	2.8148	.6989	.8315	1.0000	.5072	.4210	17.71
24.04	2.9476	.8523	.9495	2.6682	1.1652	1.0511	2.9446	.8557	.9506	1.0000	.5054	.4196	17.72
RUN = 377													
8.02	1.2528	.2367	.3007	1.2528	.2367	.3007	1.2528	.2367	.3007	1.0000	0.0000	0.0000	0.00
8.02	1.2810	.2143	.2727	1.2664	.2383	.2805	1.2664	.2383	.2805	1.0000	.0304	.0281	23.24
8.01	1.2936	.1901	.2406	1.2647	.2384	.2564	1.2647	.2384	.2564	1.0000	.0622	.0562	22.92
8.02	1.3421	.1617	.2274	1.2944	.2426	.2543	1.3397	.1657	.2287	1.0000	.1051	.0939	22.49
8.04	1.4686	.1026	.2155	1.3818	.2581	.2654	1.4672	.1051	.2163	1.0000	.2032	.1780	21.12
8.05	1.5916	-.0376	.1677	1.4336	.2631	.2558	1.5910	-.0364	.1681	1.0000	.4017	.3398	19.66
8.05	1.6331	-.1021	.1432	1.4521	.2708	.2440	1.6336	-.1030	.1429	1.0000	.4987	.4145	17.85
8.07	1.7220	-.2999	.1014	1.5198	.2976	.2102	1.7211	-.2975	.1018	1.0000	.8032	.6307	10.63
7.97	1.8605	-.5677	.0340	1.5897	.3114	.1779	1.8629	-.5753	.0328	1.0000	1.1897	.9198	9.15

TABLE 5.- CONTINUED.

VEO-WING 1/10-SCALE RESEARCH MODEL, VSTOL TEST NO. 204

ALPHA	CL	CD	CPM	CLE2	CDE2	CME2	CLCT	CDCT	CMCT	NPR	CT	CTRF	THETAJ
RUN = 378													
16.03	1.8410	.5543	.6922	1.8410	.5543	.6922	1.8410	.5543	.6922	1.0000	0.0000	0.0000	0.00
16.04	1.9265	.5489	.6743	1.9081	.5714	.6823	1.9081	.5714	.6823	1.0000	.0316	.0291	23.22
16.04	1.9792	.5383	.6599	1.9436	.5824	.6759	1.9436	.5824	.6759	1.0000	.0627	.0567	22.92
16.06	2.0506	.5241	.6531	1.9912	.5986	.6805	2.0468	.5288	.6549	1.0000	.1068	.0953	22.47
16.07	2.1608	.4836	.6142	2.0529	.6257	.6642	2.1588	.4861	.6151	1.0000	.2037	.1784	21.12
16.09	2.3060	.3624	.5578	2.1084	.6365	.6455	2.3063	.3620	.5577	1.0000	.3995	.3379	19.69
16.05	2.3736	.2988	.5229	2.1421	.6434	.6239	2.3738	.2985	.5228	1.0000	.4996	.4152	17.84
16.06	2.5224	.1002	.4946	2.2389	.6633	.6037	2.5214	.1020	.4950	1.0000	.8026	.6305	10.66
16.03	2.6835	-.1678	.4584	2.2917	.6722	.6015	2.6830	-.1668	.4586	1.0000	1.2015	.9269	8.98
RUN = 379													
-3.72	.1668	.0449	-.2303	.1668	.0449	-.2303	.1668	.0449	-.2303	1.0000	0.0000	0.0000	0.00
-2.01	.2734	.0460	-.1646	.2734	.0460	-.1646	.2734	.0460	-.1646	1.0000	0.0000	0.0000	0.00
-.03	.4407	.0525	-.0640	.4407	.0525	-.0640	.4407	.0525	-.0640	1.0000	0.0000	0.0000	0.00
2.03	.6082	.0667	.0385	.6082	.0667	.0385	.6082	.0667	.0385	1.0000	0.0000	0.0000	0.00
3.98	.7536	.0910	.1272	.7536	.0910	.1272	.7536	.0910	.1272	1.0000	0.0000	0.0000	0.00
6.03	.9180	.1262	.2302	.9180	.1262	.2302	.9180	.1262	.2302	1.0000	0.0000	0.0000	0.00
7.98	1.0872	.1722	.3232	1.0872	.1722	.3232	1.0872	.1722	.3232	1.0000	0.0000	0.0000	0.00
9.99	1.2764	.2320	.4362	1.2764	.2320	.4362	1.2764	.2320	.4362	1.0000	0.0000	0.0000	0.00
11.98	1.4285	.2998	.5314	1.4285	.2998	.5314	1.4285	.2998	.5314	1.0000	0.0000	0.0000	0.00
13.98	1.5752	.3775	.6350	1.5752	.3775	.6350	1.5752	.3775	.6350	1.0000	0.0000	0.0000	0.00
16.06	1.7091	.4674	.7396	1.7091	.4674	.7396	1.7091	.4674	.7396	1.0000	0.0000	0.0000	0.00
18.07	1.8090	.5579	.8316	1.8090	.5579	.8316	1.8090	.5579	.8316	1.0000	0.0000	0.0000	0.00
20.03	1.9172	.6553	.9397	1.9172	.6553	.9397	1.9172	.6553	.9397	1.0000	0.0000	0.0000	0.00
22.04	2.0160	.7641	1.0468	2.0160	.7641	1.0468	2.0160	.7641	1.0468	1.0000	0.0000	0.0000	0.00
24.10	2.1086	.8857	1.1441	2.1086	.8857	1.1441	2.1086	.8857	1.1441	1.0000	0.0000	0.0000	0.00
RUN = 381													
-3.71	.1813	-.0570	-.2557	.1638	.0374	-.2363	.1805	-.0525	-.2548	1.0000	.1049	.0960	14.22
-2.04	.3000	-.0564	-.1865	.2796	.0380	-.1670	.2989	-.0513	-.1854	1.0000	.1057	.0966	14.21
-.01	.5074	-.0509	-.0758	.4835	.0438	-.0560	.5059	-.0448	-.0745	1.0000	.1069	.0977	14.20
1.95	.6470	-.0347	.0058	.6199	.0590	.0254	.6453	-.0288	.0070	1.0000	.1067	.0976	14.20
4.00	.8229	-.0083	.1015	.7923	.0847	.1213	.8209	-.0022	.1028	1.0000	.1070	.0978	14.19
5.98	1.0152	.0295	.2041	.9814	.1215	.2239	1.0129	.0357	.2054	1.0000	.1072	.0980	14.19
8.03	1.2310	.0841	.3104	1.1941	.1744	.3301	1.2287	.0898	.3116	1.0000	.1067	.0975	14.20
9.99	1.3527	.1424	.3720	1.3127	.2316	.3918	1.3501	.1482	.3733	1.0000	.1070	.0978	14.20
12.06	1.5629	.2272	.4953	1.5198	.3145	.5150	1.5602	.2325	.4965	1.0000	.1065	.0974	14.20
14.02	1.7159	.3110	.5907	1.6697	.3971	.6104	1.7129	.3165	.5919	1.0000	.1069	.0977	14.20
16.04	1.8667	.4086	.6942	1.8178	.4924	.7138	1.8638	.4134	.6953	1.0000	.1061	.0970	14.20
18.03	1.9878	.5057	.7778	1.9360	.5879	.7974	1.9848	.5106	.7790	1.0000	.1063	.0972	14.20
20.02	2.1097	.6142	.8937	2.0551	.6944	.9133	2.1065	.6188	.8948	1.0000	.1061	.0970	14.21
22.06	2.2120	.7301	1.0134	2.1545	.8085	1.0330	2.2086	.7348	1.0145	1.0000	.1063	.0972	14.20
24.07	2.3225	.8651	1.1093	2.2628	.9408	1.1288	2.3194	.8690	1.1103	1.0000	.1055	.0964	14.21

TABLE 5.- CONTINUED.

VED-WING 1/10-SCALE RESEARCH MODEL, VSTOL TEST NO. 204

ALPHA	CL	CD	CPM	CLE2	CDE2	CME2	CLCT	CDCT	CMCT	NPR	CT	CTRF	THETAJ
RUN = 382													
-3.70	.2204	-.1298	-.2783	.1912	.0467	-.2440	.2206	-.1308	-.2785	1.0000	.1989	.1788	13.11
-2.00	.3433	-.1341	-.2058	.3079	.0478	-.1703	.3422	-.1286	-.2047	1.0000	.2063	.1853	13.01
.04	.5166	-.1239	-.1150	.4749	.0559	-.0796	.5155	-.1192	-.1141	1.0000	.2054	.1845	13.03
2.06	.6872	-.1063	-.0170	.6393	.0716	.0183	.6860	-.1019	-.0161	1.0000	.2050	.1842	13.03
3.98	.8819	-.0750	.0828	.8284	.0997	.1178	.8810	-.0722	.0834	1.0000	.2033	.1827	13.04
6.01	1.0737	-.0357	.1791	1.0142	.1366	.2140	1.0729	-.0333	.1795	1.0000	.2028	.1822	13.05
8.03	1.2390	.0192	.2652	1.1739	.1880	.2999	1.2386	.0203	.2655	1.0000	.2013	.1810	13.06
10.01	1.4738	.0894	.3869	1.4028	.2561	.4217	1.4733	.0907	.3872	1.0000	.2016	.1812	13.07
12.02	1.6300	.1696	.4718	1.5533	.3334	.5065	1.6295	.1706	.4720	1.0000	.2012	.1809	13.08
14.02	1.8042	.2621	.5760	1.7219	.4230	.6107	1.8038	.2629	.5762	1.0000	.2010	.1807	13.09
16.10	1.9527	.3643	.6745	1.8652	.5208	.7089	1.9530	.3638	.6744	1.0000	.1994	.1793	13.10
18.02	2.0976	.4697	.7569	2.0050	.6231	.7913	2.0979	.4692	.7568	1.0000	.1993	.1792	13.11
20.09	2.2215	.5852	.8685	2.1241	.7341	.9027	2.2226	.5836	.8682	1.0000	.1978	.1779	13.12
22.06	2.3244	.7042	.9764	2.2223	.8490	1.0104	2.3250	.7020	.9758	1.0000	.1969	.1771	13.13
24.10	2.4412	.8458	1.0801	2.3343	.9863	1.1141	2.4432	.8431	1.0794	1.0000	.1962	.1765	13.15
RUN = 383													
-3.69	.2642	-.3060	-.3130	.2111	.0459	-.2492	.2633	-.2996	-.3119	1.0000	.4074	.3559	12.27
-2.05	.3823	-.3024	-.2621	.3188	.0506	-.1978	.3806	-.2932	-.2604	1.0000	.4106	.3586	12.25
-.01	.5918	-.2868	-.1488	.5168	.0564	-.0856	.5914	-.2852	-.1485	1.0000	.4018	.3513	12.34
2.05	.7629	-.2679	-.0607	.6754	.0726	.0026	.7624	-.2661	-.0603	1.0000	.4020	.3515	12.35
4.05	.9807	-.2338	.0489	.8819	.1016	.1118	.9807	-.2339	.0488	1.0000	.3999	.3497	12.36
6.09	1.1779	-.1884	.1430	1.0675	.1422	.2058	1.1783	-.1896	.1428	1.0000	.3986	.3486	12.38
8.04	1.3765	-.1299	.2329	1.2556	.1945	.2953	1.3778	-.1334	.2322	1.0000	.3957	.3461	12.39
10.03	1.5493	-.0648	.3195	1.4158	.2599	.3827	1.5487	-.0634	.3198	1.0000	.4017	.3511	12.32
12.01	1.7554	.0206	.4310	1.6103	.3413	.4943	1.7544	.0227	.4314	1.0000	.4026	.3519	12.33
14.00	1.9454	.1144	.5280	1.7886	.4313	.5916	1.9436	.1180	.5288	1.0000	.4046	.3536	12.32
16.05	2.1135	.2243	.6218	1.9464	.5336	.6850	2.1126	.2260	.6222	1.0000	.4022	.3515	12.32
18.04	2.2520	.3326	.7018	2.0737	.6370	.7652	2.2504	.3353	.7024	1.0000	.4036	.3528	12.32
20.07	2.4016	.4576	.8093	2.2124	.7558	.8728	2.3997	.4606	.8100	1.0000	.4041	.3532	12.32
22.06	2.5362	.5932	.9215	2.3374	.8837	.9848	2.5348	.5951	.9220	1.0000	.4028	.3520	12.32
24.07	2.6671	.7420	1.0266	2.4586	1.0250	1.0898	2.6660	.7436	1.0270	1.0000	.4022	.3515	12.31

TABLE 5.- CONTINUED.

VEO-WING 1/10-SCALE RESEARCH MODEL, VSTOL TEST NO. 204

ALPHA	CL	CD	CPM	CLE2	CDE2	CME2	CLCT	CDCT	CMCT	NPR	CT	CTRF	THETAJ
RUN = 384													
-3.68	.2970	-.3868	-.3290	.2409	.0446	-.2554	.2963	-.3816	-.3281	1.0000	.5062	.4351	11.09
-2.04	.4318	-.3849	-.2633	.3633	.0456	-.1895	.4308	-.3788	-.2622	1.0000	.5071	.4359	11.08
.03	.6444	-.3751	-.1521	.5600	.0547	-.0780	.6428	-.3670	-.1506	1.0000	.5097	.4380	11.08
2.02	.7873	-.3499	-.0777	.6886	.0705	-.0042	.7869	-.3485	-.0774	1.0000	.5017	.4318	11.18
4.12	1.0121	-.3143	.0302	.8987	.0999	.1034	1.0124	-.3153	.0300	1.0000	.4988	.4294	11.19
6.03	1.2005	-.2739	.1175	1.0734	.1359	.1907	1.2010	-.2753	.1173	1.0000	.4983	.4290	11.20
7.97	1.4028	-.2133	.2113	1.2622	.1905	.2844	1.4038	-.2163	.2108	1.0000	.4963	.4275	11.24
10.02	1.6113	-.1345	.3091	1.4572	.2611	.3817	1.6136	-.1404	.3080	1.0000	.4927	.4246	11.26
12.03	1.8066	-.0525	.4064	1.6373	.3418	.4796	1.8071	-.0538	.4062	1.0000	.4984	.4291	11.20
14.02	2.0025	.0402	.4989	1.8183	.4324	.5725	2.0012	.0431	.4995	1.0000	.5037	.4333	11.15
16.05	2.1787	.1495	.5975	1.9813	.5339	.6709	2.1778	.1513	.5978	1.0000	.5023	.4321	11.14
18.02	2.3131	.2572	.6783	2.1021	.6351	.7519	2.3118	.2595	.6788	1.0000	.5031	.4328	11.15
20.05	2.4760	.3890	.7953	2.2520	.7589	.8688	2.4748	.3910	.7957	1.0000	.5027	.4325	11.14
22.09	2.6481	.5373	.9189	2.4105	.9000	.9925	2.6462	.5402	.9195	1.0000	.5040	.4336	11.15
24.05	2.7689	.6856	1.0053	2.5194	1.0394	1.0788	2.7673	.6879	1.0058	1.0000	.5033	.4329	11.14
RUN = 385													
8.02	1.0952	.1727	.3246	1.0952	.1727	.3246	1.0952	.1727	.3246	1.0000	0.0000	0.0000	0.00
8.04	1.1948	.0898	.2910	1.1585	.1785	.3104	1.1931	.0938	.2919	1.0000	.1048	.0958	14.22
8.02	1.1405	.1483	.3172	1.1284	.1768	.3239	1.1284	.1768	.3239	1.0000	.0321	.0309	14.90
8.03	1.1581	.1255	.3010	1.1369	.1764	.3126	1.1369	.1764	.3126	1.0000	.0592	.0551	14.65
8.03	1.1846	.0930	.2836	1.1498	.1779	.3022	1.1845	.0932	.2837	1.0000	.1003	.0918	14.26
8.04	1.2545	.0220	.2599	1.1899	.1890	.2943	1.2548	.0212	.2598	1.0000	.1991	.1790	13.10
8.05	1.3697	-.1357	.2279	1.2471	.1942	.2912	1.3689	-.1336	.2283	1.0000	.4026	.3519	12.33
8.06	1.3856	-.2118	.1984	1.2434	.1965	.2718	1.3849	-.2097	.1988	1.0000	.5025	.4323	11.15
8.07	1.4823	-.4111	.1864	1.3100	.2145	.2713	1.4827	-.4123	.1862	1.0000	.7984	.6489	7.33
7.99	1.6221	-.7069	.1351	1.3843	.2232	.2506	1.6204	-.7003	.1360	1.0000	1.2085	.9600	6.36
RUN = 386													
16.03	1.6977	.4645	.7290	1.6977	.4645	.7290	1.6977	.4645	.7290	1.0000	0.0000	0.0000	0.00
16.04	1.7657	.4558	.7218	1.7506	.4811	.7281	1.7506	.4811	.7281	1.0000	.0306	.0295	14.92
16.05	1.7977	.4363	.7038	1.7692	.4844	.7155	1.7692	.4844	.7155	1.0000	.0601	.0560	14.64
16.06	1.8541	.4140	.6949	1.8059	.4965	.7143	1.8520	.4175	.6958	1.0000	.1045	.0956	14.22
16.07	1.9642	.3612	.6750	1.8757	.5199	.7098	1.9633	.3629	.6753	1.0000	.2021	.1817	13.07
16.09	2.1042	.2228	.6191	1.9359	.5345	.6827	2.1019	.2271	.6200	1.0000	.4056	.3543	12.28
16.10	2.1694	.1587	.5975	1.9716	.5432	.6708	2.1683	.1608	.5979	1.0000	.5027	.4323	11.12
16.07	2.3190	-.0337	.5692	2.0609	.5634	.6542	2.3188	-.0331	.5693	1.0000	.8008	.6506	7.31
16.00	2.4752	-.3146	.5262	2.1105	.5698	.6417	2.4744	-.3126	.5264	1.0000	1.2028	.9566	6.41

TABLE 5.- CONTINUED.

VEO-WING 1/10-SCALE RESEARCH MODEL, VSTOL TEST NO. 204

ALPHA	CL	CD	CPM	CLE2	CDE2	CME2	CLCT	CDCT	CMCT	NPR	CT	CTRF	THETAJ
RUN = 387													
-3.77	-.1663	.0415	-.1952	-.1663	.0415	-.1952	-.1663	.0415	-.1952	1.0000	0.0000	0.0000	0.00
-2.04	-.0038	.0309	-.0982	-.0038	.0309	-.0982	-.0038	.0309	-.0982	1.0000	0.0000	0.0000	0.00
-.01	.1570	.0306	-.0092	.1570	.0306	-.0092	.1570	.0306	-.0092	1.0000	0.0000	0.0000	0.00
2.07	.3189	.0350	.0904	.3189	.0350	.0904	.3189	.0350	.0904	1.0000	0.0000	0.0000	0.00
4.01	.4803	.0514	.1932	.4803	.0514	.1932	.4803	.0514	.1932	1.0000	0.0000	0.0000	0.00
5.99	.6467	.0770	.2994	.6467	.0770	.2994	.6467	.0770	.2994	1.0000	0.0000	0.0000	0.00
7.97	.8214	.1120	.3972	.8214	.1120	.3972	.8214	.1120	.3972	1.0000	0.0000	0.0000	0.00
10.02	1.0051	.1614	.4953	1.0051	.1614	.4953	1.0051	.1614	.4953	1.0000	0.0000	0.0000	0.00
12.06	1.1735	.2225	.5861	1.1735	.2225	.5861	1.1735	.2225	.5861	1.0000	0.0000	0.0000	0.00
14.09	1.3491	.2985	.6933	1.3491	.2985	.6933	1.3491	.2985	.6933	1.0000	0.0000	0.0000	0.00
16.03	1.4689	.3731	.7785	1.4689	.3731	.7785	1.4689	.3731	.7785	1.0000	0.0000	0.0000	0.00
18.04	1.5824	.4599	.8643	1.5824	.4599	.8643	1.5824	.4599	.8643	1.0000	0.0000	0.0000	0.00
20.12	1.7008	.5540	.9764	1.7008	.5540	.9764	1.7008	.5540	.9764	1.0000	0.0000	0.0000	0.00
22.06	1.8104	.6557	1.0767	1.8104	.6557	1.0767	1.8104	.6557	1.0767	1.0000	0.0000	0.0000	0.00
24.04	1.9184	.7706	1.1696	1.9184	.7706	1.1696	1.9184	.7706	1.1696	1.0000	0.0000	0.0000	0.00
RUN = 389													
-3.84	-.1193	-.0594	-.1959	-.1244	.0332	-.1874	-.1194	-.0576	-.1957	1.0000	.1020	.0928	7.00
-1.98	.0687	-.0708	-.0928	.0606	.0214	-.0844	.0686	-.0692	-.0926	1.0000	.1017	.0925	7.02
.06	.2096	-.0693	-.0169	.1982	.0224	-.0085	.2095	-.0679	-.0167	1.0000	.1016	.0924	7.03
1.96	.3483	-.0613	.0586	.3339	.0298	.0670	.3481	-.0601	.0587	1.0000	.1013	.0922	7.06
4.05	.5457	-.0439	.1772	.5280	.0465	.1856	.5455	-.0428	.1773	1.0000	.1013	.0921	7.07
5.97	.7131	-.0175	.2709	.6924	.0716	.2792	.7130	-.0170	.2710	1.0000	.1005	.0914	7.14
8.02	.9127	.0237	.3733	.8889	.1113	.3815	.9127	.0235	.3732	1.0000	.0997	.0907	7.17
10.05	1.0918	.0775	.4661	1.0650	.1635	.4743	1.0921	.0766	.4660	1.0000	.0990	.0900	7.23
12.04	1.2674	.1474	.5640	1.2379	.2317	.5721	1.2680	.1459	.5639	1.0000	.0982	.0893	7.28
14.12	1.4287	.2241	.6686	1.3964	.3064	.6766	1.4296	.2217	.6683	1.0000	.0972	.0884	7.34
16.10	1.5765	.3058	.7657	1.5414	.3866	.7737	1.5776	.3032	.7655	1.0000	.0969	.0882	7.39
18.03	1.7099	.3960	.8513	1.6718	.4763	.8594	1.7108	.3941	.8511	1.0000	.0977	.0889	7.35
20.03	1.8454	.4879	.9496	1.8015	.5754	.9585	1.8423	.4941	.9502	1.0000	.1076	.0979	6.59
22.03	1.9553	.6015	1.0462	1.9107	.6815	1.0545	1.9550	.6021	1.0463	1.0000	.1008	.0916	7.10
24.11	2.0851	.7336	1.1509	2.0378	.8115	1.1592	2.0850	.7337	1.1509	1.0000	.1002	.0912	7.16

TABLE 5.- CONTINUED.

VEO-WING 1/10-SCALE RESEARCH MODEL,VSTOL TEST NO. 204

ALPHA	CL	CD	CPM	CLE2	CDE2	CME2	CLCT	CDCT	CMCT	NPR	CT	CTRF	THETAJ
RUN = 390													
-3.83	-.1098	-.1415	-.2116	-.1131	.0407	-.1961	-.1098	-.1397	-.2115	1.0000	.2020	.1822	4.90
-2.02	.0661	-.1512	-.1116	.0569	.0317	-.0961	.0660	-.1485	-.1114	1.0000	.2029	.1831	4.90
-.03	.2232	-.1513	-.0259	.2076	.0316	-.0103	.2229	-.1482	-.0257	1.0000	.2035	.1836	4.89
1.99	.3957	-.1437	.0638	.3737	.0387	.0794	.3953	-.1405	.0641	1.0000	.2036	.1837	4.89
4.02	.5809	-.1242	.1617	.5524	.0578	.1774	.5803	-.1205	.1621	1.0000	.2042	.1842	4.89
6.00	.7677	-.0949	.2646	.7328	.0860	.2803	.7669	-.0911	.2650	1.0000	.2042	.1842	4.89
8.04	.9467	-.0541	.3566	.9055	.1254	.3722	.9458	-.0505	.3569	1.0000	.2042	.1842	4.89
9.99	1.1484	.0019	.4559	1.1009	.1804	.4716	1.1473	.0060	.4563	1.0000	.2048	.1847	4.89
12.05	1.3297	.0746	.5591	1.2756	.2521	.5748	1.3281	.0795	.5595	1.0000	.2058	.1856	4.88
14.10	1.5092	.1542	.6627	1.4485	.3306	.6785	1.5072	.1600	.6632	1.0000	.2068	.1865	4.88
16.02	1.6489	.2374	.7492	1.5825	.4110	.7650	1.6469	.2425	.7497	1.0000	.2060	.1858	4.88
18.06	1.7801	.3327	.8177	1.7075	.5042	.8335	1.7778	.3381	.8182	1.0000	.2065	.1862	4.88
20.12	1.9389	.4478	.9308	1.8603	.6163	.9466	1.9365	.4528	.9313	1.0000	.2062	.1860	4.88
22.14	2.0747	.5661	1.0301	1.9900	.7322	1.0459	2.0720	.5715	1.0306	1.0000	.2067	.1864	4.88
24.05	2.2024	.6944	1.1174	2.1121	.8577	1.1332	2.1994	.6999	1.1179	1.0000	.2069	.1866	4.88
RUN = 391													
-3.83	-.0873	-.3079	-.2262	-.0896	.0429	-.1975	-.0873	-.3079	-.2262	1.0000	.4000	.3508	4.22
-2.00	.0897	-.3170	-.1390	.0760	.0337	-.1102	.0897	-.3168	-.1389	1.0000	.4003	.3510	4.22
-.05	.2569	-.3158	-.0497	.2313	.0348	-.0209	.2569	-.3151	-.0496	1.0000	.4008	.3515	4.22
2.03	.4415	-.3073	.0397	.4032	.0421	.0685	.4415	-.3066	.0397	1.0000	.4008	.3515	4.22
4.03	.6558	-.2878	.1489	.6052	.0611	.1778	.6555	-.2861	.1491	1.0000	.4020	.3525	4.22
6.04	.8182	-.2584	.2356	.7555	.0880	.2644	.8180	-.2571	.2357	1.0000	.4015	.3520	4.22
8.01	1.0325	-.2148	.3442	.9579	.1295	.3731	1.0322	-.2132	.3443	1.0000	.4019	.3524	4.22
10.03	1.2330	-.1557	.4443	1.1463	.1854	.4731	1.2327	-.1546	.4444	1.0000	.4012	.3518	4.22
12.08	1.4111	-.0849	.5365	1.3120	.2537	.5654	1.4105	-.0829	.5367	1.0000	.4024	.3528	4.22
14.11	1.5940	-.0036	.6287	1.4828	.3321	.6577	1.5930	-.0008	.6289	1.0000	.4033	.3536	4.22
16.12	1.7827	.0970	.7256	1.6602	.4273	.7544	1.7822	.0985	.7257	1.0000	.4018	.3523	4.22
18.00	1.9364	.1945	.8017	1.8028	.5214	.8307	1.9355	.1968	.8019	1.0000	.4028	.3532	4.22
20.05	2.0705	.3079	.8962	1.9258	.6288	.9251	2.0699	.3091	.8964	1.0000	.4015	.3520	4.22
22.11	2.2349	.4398	.9935	2.0787	.7555	1.0223	2.2342	.4412	.9936	1.0000	.4018	.3523	4.22
24.12	2.3951	.5876	1.0838	2.2276	.8981	1.1127	2.3941	.5895	1.0839	1.0000	.4024	.3528	4.22

TABLE 5.- CONTINUED.

VEO-WING 1/10-SCALE RESEARCH MODEL, VSTOL TEST NO. 204

ALPHA	CL	CD	CPM	CLE2	CDE2	CME2	CLCT	CDCT	CMCT	NPR	CT	CTRF	THETAJ
RUN = 392													
-3.82	-.0714	-.3934	-.2310	-.0740	.0391	-.1965	-.0714	-.3917	-.2309	1.0000	.5019	.4324	4.16
-2.00	.0935	-.4020	-.1462	.0773	.0300	-.1116	.0935	-.4005	-.1460	1.0000	.5017	.4323	4.16
-.02	.2812	-.4012	-.0605	.2500	.0307	-.0259	.2811	-.3990	-.0603	1.0000	.5026	.4330	4.15
1.98	.4555	-.3899	.0254	.4093	.0403	.0599	.4553	-.3880	.0255	1.0000	.5022	.4327	4.15
4.00	.6570	-.3732	.1291	.5956	.0557	.1637	.6566	-.3707	.1293	1.0000	.5030	.4333	4.15
6.11	.8787	-.3383	.2428	.8016	.0882	.2774	.8782	-.3356	.2430	1.0000	.5032	.4334	4.14
8.02	1.0468	-.2979	.3250	.9556	.1248	.3595	1.0464	-.2962	.3251	1.0000	.5020	.4325	4.15
10.05	1.2620	-.2388	.4308	1.1556	.1819	.4654	1.2611	-.2356	.4311	1.0000	.5039	.4340	4.14
12.06	1.4553	-.1648	.5224	1.3337	.2537	.5571	1.4538	-.1597	.5228	1.0000	.5062	.4358	4.13
14.02	1.6589	-.0722	.6200	1.5252	.3337	.6543	1.6602	-.0761	.6197	1.0000	.4952	.4273	4.22
16.15	1.8382	.0284	.7121	1.6894	.4292	.7464	1.8396	.0247	.7118	1.0000	.4954	.4275	4.22
18.07	1.9837	.1288	.7897	1.8218	.5239	.8239	1.9853	.1247	.7893	1.0000	.4949	.4270	4.21
20.02	2.1182	.2370	.8793	1.9428	.6267	.9136	2.1198	.2333	.8790	1.0000	.4953	.4273	4.21
22.04	2.2838	.3669	.9783	2.0942	.7515	1.0127	2.2849	.3547	.9781	1.0000	.4971	.4289	4.21
24.06	2.4615	.5241	1.0647	2.2593	.8999	1.0988	2.4636	.5200	1.0643	1.0000	.4946	.4267	4.21
RUN = 393													
8.01	.8163	.1176	.3894	.8163	.1176	.3894	.8163	.1176	.3894	1.0000	0.0000	0.0000	0.00
8.01	.8580	.0865	.3819	.8464	.1163	.3847	.8464	.1163	.3847	1.0000	.0355	.0320	13.28
8.02	.8707	.0653	.3738	.8531	.1168	.3786	.8531	.1168	.3786	1.0000	.0599	.0544	10.38
8.01	.8938	.0331	.3641	.8701	.1203	.3723	.8940	.0325	.3641	1.0000	.0994	.0904	7.20
8.04	.9790	-.0425	.3700	.9391	.1311	.3852	.9796	-.0449	.3697	1.0000	.1972	.1781	4.92
8.02	.9948	-.2174	.3235	.9200	.1276	.3524	.9943	-.2151	.3237	1.0000	.4027	.3530	4.22
8.02	1.0655	-.2945	.3270	.9737	.1315	.3617	1.0644	-.2895	.3274	1.0000	.5060	.4358	4.14
8.02	1.1191	-.4964	.3040	.9949	.1401	.3519	1.1192	-.4973	.3040	1.0000	.7989	.6485	3.02
8.01	1.2380	-.7856	.2702	1.0586	.1492	.3400	1.2383	-.7870	.2701	1.0000	1.1982	.9518	2.35
RUN = 394													
16.03	1.4691	.3765	.7765	1.4691	.3765	.7765	1.4691	.3765	.7765	1.0000	0.0000	0.0000	0.00
16.04	1.5201	.3571	.7763	1.5060	.3818	.7788	1.5060	.3818	.7788	1.0000	.0317	.0285	13.61
16.04	1.5316	.3336	.7606	1.5072	.3816	.7654	1.5072	.3816	.7654	1.0000	.0593	.0538	10.93
16.05	1.5891	.3092	.7651	1.5531	.3933	.7734	1.5889	.3097	.7651	1.0000	.1006	.0915	7.11
16.03	1.6420	.2367	.7445	1.5777	.4046	.7598	1.6422	.2361	.7444	1.0000	.1993	.1799	4.91
16.05	1.7526	.0864	.7163	1.6320	.4131	.7449	1.7536	.0838	.7161	1.0000	.3969	.3483	4.22
16.05	1.8410	.0207	.7167	1.6916	.4264	.7513	1.8404	.0221	.7168	1.0000	.5017	.4323	4.16
16.05	1.9655	-.1674	.6770	1.7541	.4441	.7247	1.9664	-.1699	.6768	1.0000	.7968	.6470	3.02
16.04	2.1157	-.4407	.6439	1.8084	.4564	.7134	2.1180	-.4474	.6434	1.0000	1.1911	.9483	2.86

TABLE 5.- CONTINUED.

VEO-WING 1/10-SCALE RESEARCH MODEL, VSTOL TEST NO. 204

ALPHA	CL	CD	CPM	CLE2	CDE2	CME2	CLCT	CDCT	CMCT	NPR	CT	CTRF	THETAJ
RUN = 400													
-3.88	.1045	.0415	-.2616	.1045	.0415	-.2616	.1045	.0415	-.2616	1.0004	0.0000	0.0000	0.00
-2.04	.2737	.0376	-.1589	.2737	.0376	-.1589	.2737	.0376	-.1589	1.0004	0.0000	0.0000	0.00
.00	.4218	.0457	-.0823	.4218	.0457	-.0823	.4218	.0457	-.0823	1.0006	0.0000	0.0000	0.00
2.08	.5923	.0588	.0206	.5923	.0588	.0206	.5923	.0588	.0206	1.0000	0.0000	0.0000	0.00
3.99	.7902	.0792	.1391	.7902	.0792	.1391	.7902	.0792	.1391	1.0000	0.0000	0.0000	0.00
5.99	.9205	.1117	.2166	.9205	.1117	.2166	.9205	.1117	.2166	1.0000	0.0000	0.0000	0.00
7.99	1.1190	.1603	.3232	1.1190	.1603	.3232	1.1190	.1603	.3232	1.0000	0.0000	0.0000	0.00
9.99	1.2831	.2188	.4143	1.2831	.2188	.4143	1.2831	.2188	.4143	1.0000	0.0000	0.0000	0.00
12.01	1.4497	.2926	.5128	1.4497	.2926	.5128	1.4497	.2926	.5128	1.0000	0.0000	0.0000	0.00
14.00	1.6026	.3754	.6092	1.6026	.3754	.6092	1.6026	.3754	.6092	1.0000	0.0000	0.0000	0.00
15.97	1.7138	.4561	.7056	1.7138	.4561	.7056	1.7138	.4561	.7056	1.0000	0.0000	0.0000	0.00
17.97	1.8161	.5442	.8005	1.8161	.5442	.8005	1.8161	.5442	.8005	1.0004	0.0000	0.0000	0.00
20.03	1.9315	.6469	.9101	1.9315	.6469	.9101	1.9315	.6469	.9101	1.0000	0.0000	0.0000	0.00
22.07	2.0283	.7518	1.0244	2.0283	.7518	1.0244	2.0283	.7518	1.0244	1.0000	0.0000	0.0000	0.00
24.02	2.1260	.8714	1.1125	2.1260	.8714	1.1125	2.1260	.8714	1.1125	1.0000	0.0000	0.0000	0.00
RUN = 402													
-3.77	.4945	-.8069	-.4966	.2882	.0765	-.2795	.4967	-.8165	-.4990	1.8963	.8903	.9071	16.92
-2.02	.6882	-.7995	-.4135	.4543	.0799	-.1957	.6900	-.8062	-.4152	1.8965	.8932	.9101	16.92
-.01	.9104	-.7748	-.3086	.6477	.0908	-.0922	.9140	-.7866	-.3116	1.8953	.8879	.9047	16.90
1.99	1.0820	-.7464	-.2333	.7886	.1114	-.0164	1.0854	-.7562	-.2358	1.8952	.8898	.9066	16.89
4.01	1.2908	-.7047	-.1303	.9679	.1411	.0862	1.2950	-.7156	-.1331	1.8948	.8886	.9054	16.89
5.97	1.4924	-.6516	-.0311	1.1403	.1817	.1855	1.4972	-.6630	-.0341	1.8969	.8879	.9046	16.93
8.02	1.7092	-.5836	.0705	1.3274	.2373	.2872	1.7141	-.5942	.0677	1.8964	.8886	.9053	16.92
10.02	1.9011	-.5021	.1686	1.4915	.3041	.3850	1.9069	-.5134	.1655	1.8961	.8875	.9042	16.91
12.07	2.1109	-.4015	.2800	1.6718	.3912	.4969	2.1161	-.4109	.2774	1.8962	.8894	.9062	16.92
14.08	2.2771	-.2968	.3769	1.8100	.4802	.5940	2.2825	-.3056	.3744	1.8971	.8899	.9066	16.93
16.01	2.4582	-.1785	.4791	1.9649	.5828	.6963	2.4635	-.1867	.4767	1.8969	.8904	.9072	16.93
18.04	2.6317	-.0496	.5647	2.1114	.6946	.7821	2.6368	-.0569	.5626	1.8965	.8912	.9080	16.92
20.11	2.8048	.1006	.6727	2.2590	.8244	.8896	2.8111	.0922	.6702	1.8959	.8897	.9065	16.91
22.10	2.9587	.2524	.7814	2.3900	.9551	.9976	2.9669	.2423	.7783	1.8945	.8873	.9040	16.88
24.03	3.0786	.4037	.8738	2.4862	1.0866	1.0902	3.0871	.3940	.8707	1.8961	.8873	.9041	16.91

TABLE 5.- CONTINUED.

VEO-WING 1/10-SCALE RESEARCH MODEL, VSTOL TEST NO. 204

ALPHA	CL	CD	CPM	CLE2	CDE2	CME2	CLCT	CDCT	CMCT	NPR	CT	CTRF	THETAJ
RUN = 403													
-3.69	.8081	-1.8953	-.7775	.2620	.0388	-.2646	.8160	-1.9234	-.7850	3.1400	1.9714	2.0097	19.45
-1.85	1.0318	-1.8694	-.6973	.4257	.0423	-.1860	1.0110	-1.8039	-.6798	3.1314	1.9674	2.0055	19.44
.01	1.2267	-1.8285	-.6231	.5629	.0520	-.1147	1.2076	-1.7743	-.6085	3.1304	1.9564	1.9942	19.44
2.05	1.4662	-1.7839	-.5238	.7361	.0710	-.0158	1.4454	-1.7311	-.5094	3.1273	1.9556	1.9934	19.43
4.05	1.7062	-1.7429	-.4304	.9063	.0971	.0813	1.6785	-1.6791	-.4126	3.1346	1.9682	2.0064	19.45
6.03	1.9366	-1.6708	-.3283	1.0774	.1339	.1810	1.9099	-1.6147	-.3125	3.1278	1.9610	1.9988	19.43
8.02	2.1843	-1.5925	-.2326	1.2604	.1853	.2782	2.1535	-1.5333	-.2156	3.1310	1.9655	2.0035	19.44
10.01	2.4223	-1.4861	-.1176	1.4423	.2497	.3905	2.3944	-1.4368	-.1032	3.1300	1.9556	1.9934	19.44
12.02	2.6313	-1.3722	-.0206	1.5920	.3268	.4870	2.6026	-1.3253	-.0066	3.1285	1.9539	1.9916	19.43
13.98	2.8620	-1.2558	.0855	1.7589	.4161	.5961	2.8255	-1.2005	.1024	3.1305	1.9650	2.0030	19.44
16.07	3.0552	-1.1111	.1705	1.8925	.5189	.6807	3.0172	-1.0578	.1871	3.1287	1.9642	2.0021	19.44
18.04	3.2740	-.9496	.2792	2.0600	.6336	.7879	3.2385	-.9033	.2941	3.1319	1.9573	1.9951	19.44
20.03	3.5141	-.7784	.4098	2.2411	.7674	.9203	3.4723	-.7276	.4266	3.1304	1.9645	2.0025	19.44
22.00	3.6603	-.6180	.4952	2.3349	.8834	1.0057	3.6166	-.5685	.5120	3.1303	1.9648	2.0028	19.44
24.07	3.8234	-.4293	.5980	2.4437	1.0240	1.1089	3.7771	-.3806	.6151	3.1311	1.9659	2.0039	19.44
RUN = 404													
-3.88	.1342	.0437	-.2308	.1342	.0437	-.2308	.1342	.0437	-.2308	1.0000	0.0000	0.0000	0.00
-2.01	.2584	.0444	-.1625	.2584	.0444	-.1625	.2584	.0444	-.1625	1.0000	0.0000	0.0000	0.00
.00	.4376	.0503	-.0589	.4376	.0503	-.0589	.4376	.0503	-.0589	1.0000	0.0000	0.0000	0.00
1.96	.5976	.0660	.0312	.5976	.0660	.0312	.5976	.0660	.0312	1.0000	0.0000	0.0000	0.00
4.01	.7792	.0892	.1445	.7792	.0892	.1445	.7792	.0892	.1445	1.0000	0.0000	0.0000	0.00
6.01	.9318	.1240	.2354	.9318	.1240	.2354	.9318	.1240	.2354	1.0000	0.0000	0.0000	0.00
8.06	1.1015	.1721	.3227	1.1015	.1721	.3227	1.1015	.1721	.3227	1.0000	0.0000	0.0000	0.00
10.02	1.2671	.2324	.4230	1.2671	.2324	.4230	1.2671	.2324	.4230	1.0000	0.0000	0.0000	0.00
12.01	1.4349	.3077	.5186	1.4349	.3077	.5186	1.4349	.3077	.5186	1.0000	0.0000	0.0000	0.00
14.07	1.5931	.3906	.6229	1.5931	.3906	.6229	1.5931	.3906	.6229	1.0000	0.0000	0.0000	0.00
16.08	1.7114	.4755	.7122	1.7114	.4755	.7122	1.7114	.4755	.7122	1.0000	0.0000	0.0000	0.00
18.06	1.8107	.5626	.8000	1.8107	.5626	.8000	1.8107	.5626	.8000	1.0000	0.0000	0.0000	0.00
20.08	1.9254	.6643	.9135	1.9254	.6643	.9135	1.9254	.6643	.9135	1.0000	0.0000	0.0000	0.00
22.00	2.0175	.7644	1.0200	2.0175	.7644	1.0200	2.0175	.7644	1.0200	1.0000	0.0000	0.0000	0.00
24.06	2.1184	.8968	1.1102	2.1184	.8968	1.1102	2.1184	.8968	1.1102	1.0000	0.0000	0.0000	0.00

TABLE 5.- CONTINUED.

VEO-WING 1/10-SCALE RESEARCH MODEL,VSTOL TEST NO. 204

ALPHA	CL	CD	CPM	CLE2	CDE2	CME2	CLCT	CDCT	CMCT	NPR	CT	CTRF	THETAJ
RUN = 406													
-3.82	.1422	.0135	-.2386	.1424	.0405	-.2361	.1424	.0405	-.2361	1.0000	.0440	.0270	3.37
-2.00	.2794	.0114	-.1547	.2788	.0382	-.1521	.2788	.0382	-.1521	1.0000	.0437	.0268	3.37
.03	.4121	.0194	-.0816	.4105	.0461	-.0790	.4105	.0461	-.0790	1.0000	.0436	.0267	3.37
1.98	.5762	.0323	.0199	.5737	.0585	.0224	.5737	.0585	.0224	1.0000	.0430	.0263	3.37
3.98	.7621	.0570	.1280	.7588	.0826	.1304	.7588	.0826	.1304	1.0000	.0423	.0258	3.38
6.04	.9390	.0875	.2262	.9341	.1172	.2291	.9341	.1172	.2291	1.0000	.0479	.0301	3.35
8.04	1.1254	.1353	.3269	1.1196	.1645	.3297	1.1196	.1645	.3297	1.0000	.0476	.0297	3.35
10.06	1.3169	.1972	.4310	1.3101	.2258	.4338	1.3101	.2258	.4338	1.0000	.0472	.0295	3.35
12.06	1.4772	.2717	.5290	1.4695	.2994	.5317	1.4695	.2994	.5317	1.0000	.0463	.0288	3.36
14.03	1.6524	.3599	.6422	1.6439	.3872	.6449	1.6439	.3872	.6449	1.0000	.0460	.0286	3.36
16.03	1.7687	.4475	.7284	1.7596	.4734	.7310	1.7596	.4734	.7310	1.0000	.0445	.0274	3.37
18.00	1.8676	.5477	.8165	1.8579	.5726	.8191	1.8579	.5726	.8191	1.0000	.0435	.0267	3.37
20.03	2.0146	.6559	.9298	2.0025	.6839	.9327	2.0025	.6839	.9327	1.0000	.0485	.0304	3.35
22.09	2.1185	.7707	1.0477	2.1060	.7971	1.0505	2.1060	.7971	1.0505	1.0000	.0469	.0293	3.36
24.05	2.2203	.8956	1.1436	2.2070	.9213	1.1513	2.2070	.9213	1.1513	1.0000	.0464	.0289	3.36
-.00	.4373	.0319	-.0605	.4355	.0639	-.0575	.4355	.0639	-.0575	1.0000	.0506	.0321	3.34
RUN = 407													
-3.73	.1393	-.0070	-.2452	.1402	.0582	-.2387	.1393	-.0103	-.2455	1.0000	.0951	.0652	3.00
-2.00	.3007	-.0106	-.1453	.2995	.0538	-.1389	.3007	-.0147	-.1457	1.0000	.0939	.0643	3.00
.02	.4363	-.0029	-.0638	.4329	.0611	-.0574	.4365	-.0073	-.0642	1.0000	.0935	.0641	3.00
1.98	.6094	.0089	.0378	.6039	.0724	.0441	.6098	.0042	.0373	1.0000	.0930	.0637	3.01
3.99	.7776	.0321	.1265	.7699	.0950	.1328	.7782	.0271	.1260	1.0000	.0926	.0634	3.01
6.00	.9785	.0630	.2310	.9685	.1260	.2373	.9793	.0584	.2305	1.0000	.0932	.0639	3.00
7.98	1.1379	.1092	.3120	1.1257	.1723	.3184	1.1388	.1050	.3116	1.0000	.0938	.0642	3.00
10.03	1.3314	.1703	.4255	1.3168	.2335	.4320	1.3322	.1669	.4252	1.0000	.0947	.0649	3.00
12.02	1.5128	.2512	.5222	1.4957	.3149	.5287	1.5135	.2486	.5219	1.0000	.0961	.0659	2.99
14.05	1.7018	.3409	.6215	1.6820	.4057	.6282	1.7021	.3400	.6214	1.0000	.0985	.0677	2.98
16.07	1.8542	.4360	.7037	1.8318	.5008	.7106	1.8543	.4358	.7037	1.0000	.0997	.0686	2.98
18.06	2.0063	.5444	.7928	1.9816	.6087	.7997	2.0063	.5445	.7929	1.0000	.1002	.0689	2.98
20.05	2.1138	.6501	.8846	2.0868	.7136	.8915	2.1137	.6503	.8847	1.0000	.1004	.0690	2.98
22.07	2.2190	.7656	.9939	2.1898	.8282	1.0008	2.2189	.7659	.9939	1.0000	.1004	.0691	2.98
24.07	2.3222	.8926	1.0964	2.2909	.9539	1.1033	2.3221	.8926	1.0964	1.0000	.1001	.0688	2.98

TABLE 5.- CONTINUED.

VEO-WING 1/10-SCALE RESEARCH MODEL, VSTOL TEST NO. 204

ALPHA	CL	CD	CPM	CLE2	CDE2	CME2	CLCT	CDCT	CMCT	NPR	CT	CTRF	THETAJ
RUN = 408													
-3.71	.1536	-.0746	-.2586	.1539	.0538	-.2469	.1536	-.0849	-.2595	1.0000	.1851	.1284	3.58
-2.04	.2750	-.0762	-.1898	.2715	.0519	-.1782	.2753	-.0868	-.1908	1.0000	.1848	.1282	3.58
-.02	.4704	-.0719	-.0744	.4624	.0565	-.0627	.4710	-.0820	-.0753	1.0000	.1854	.1286	3.59
1.98	.6234	-.0583	.0156	.6108	.0707	.0273	.6243	-.0674	.0147	1.0000	.1869	.1297	3.60
4.00	.8256	-.0302	.1184	.8084	.0985	.1301	.8268	-.0390	.1176	1.0000	.1871	.1298	3.61
6.04	1.0213	.0038	.2213	.9995	.1324	.2330	1.0227	-.0043	.2205	1.0000	.1881	.1305	3.63
8.00	1.1892	.0545	.3049	1.1630	.1817	.3167	1.1910	.0459	.3041	1.0000	.1873	.1299	3.62
10.00	1.3729	.1168	.3988	1.3422	.2436	.4106	1.3749	.1088	.3981	1.0000	.1880	.1304	3.63
12.00	1.5794	.1973	.4968	1.5443	.3230	.5086	1.5816	.1895	.4961	1.0000	.1883	.1306	3.62
14.06	1.7788	.2880	.5859	1.7390	.4129	.5977	1.7811	.2808	.5853	1.0000	.1891	.1311	3.64
15.99	1.9545	.3879	.6781	1.9106	.5112	.6899	1.9571	.3806	.6774	1.0000	.1888	.1309	3.63
17.98	2.0843	.4910	.7517	2.0360	.6129	.7635	2.0871	.4840	.7510	1.0000	.1892	.1312	3.64
20.05	2.2238	.6109	.8661	2.1715	.7302	.8779	2.2272	.6032	.8654	1.0000	.1879	.1303	3.63
22.03	2.3229	.7201	.9623	2.2660	.8387	.9741	2.3260	.7137	.9616	1.0000	.1897	.1315	3.64
24.05	2.4414	.8556	1.0741	2.3804	.9718	1.0859	2.4448	.8490	1.0734	1.0000	.1893	.1313	3.63
RUN = 409													
-2.00	.3108	-.1082	-.1737	.3052	.0474	-.1609	.3101	-.0901	-.1722	1.0000	.2265	.1558	4.05
-.01	.4865	-.1004	-.0726	.4755	.0546	-.0599	.4852	-.0826	-.0712	1.0000	.2259	.1554	4.05
2.01	.6344	-.0855	.0147	.6180	.0692	.0275	.6325	-.0676	.0162	1.0000	.2262	.1556	4.06
3.99	.8304	-.0575	.1149	.8086	.0971	.1277	.8273	-.0391	.1164	1.0000	.2269	.1561	4.06
6.00	1.0150	-.0254	.2118	.9869	.1329	.2248	1.0109	-.0023	.2137	1.0000	.2343	.1608	4.09
8.03	1.2063	.0253	.3040	1.1724	.1830	.3170	1.2012	.0488	.3059	1.0000	.2351	.1613	4.10
10.01	1.4078	.0913	.4023	1.3684	.2481	.4154	1.4018	.1150	.4043	1.0000	.2356	.1617	4.10
12.01	1.6082	.1774	.4970	1.5648	.3279	.5099	1.6029	.1958	.4986	1.0000	.2278	.1567	4.07
14.05	1.7956	.2640	.5748	1.7467	.4135	.5877	1.7895	.2828	.5764	1.0000	.2288	.1573	4.06
16.05	1.9889	.3724	.6756	1.9352	.5191	.6885	1.9825	.3899	.6772	1.0000	.2272	.1563	4.06
18.08	2.1481	.4776	.7650	2.0875	.6263	.7781	2.1393	.4991	.7669	1.0000	.2339	.1606	4.09
20.05	2.2566	.5859	.8615	2.1911	.7321	.8744	2.2473	.6068	.8633	1.0000	.2334	.1602	4.09
22.07	2.3784	.7080	.9708	2.3073	.8527	.9839	2.3678	.7295	.9728	1.0000	.2350	.1613	4.09
24.07	2.4865	.8419	1.0613	2.4101	.9846	1.0744	2.4749	.8636	1.0633	1.0000	.2358	.1618	4.10
24.05	2.4414	.8556	1.0741	2.3804	.9718	1.0859	2.4448	.8490	1.0734	1.0000	.1893	.1313	3.63

TABLE 5.- CONTINUED.

VEO-WING 1/10-SCALE RESEARCH MODEL,VSTOL TEST NO. 204

ALPHA	CL	CD	CPM	CLE2	CDE2	CME2	CLCT	CDCT	CMCT	NPR	CT	CTRF	THETAJ
RUN = 410													
-3.72	.1130	-.0261	-.2641	.1139	.0452	-.2570	.1130	-.0237	-.2638	1.0000	.1034	.0713	2.97
-2.04	.2809	-.0306	-.1624	.2798	.0406	-.1553	.2809	-.0283	-.1622	1.0000	.1033	.0712	2.97
.09	.4754	-.0246	-.0447	.4716	.0470	-.0375	.4753	-.0218	-.0444	1.0000	.1041	.0717	2.97
3.98	.7909	.0143	.1271	.7821	.0859	.1343	.7905	.0175	.1274	1.0000	.1047	.0722	2.96
3.99	.7863	.0145	.1249	.7776	.0865	.1321	.7859	.0180	.1252	1.0000	.1052	.0726	2.96
6.02	.9710	.0501	.2211	.9596	.1223	.2284	.9703	.0541	.2215	1.0000	.1058	.0730	2.96
7.99	1.1451	.0967	.3143	1.1312	.1682	.3216	1.1443	.1005	.3147	1.0000	.1055	.0728	2.96
9.97	1.3369	.1597	.4197	1.3207	.2304	.4269	1.3361	.1631	.4201	1.0000	.1051	.0725	2.96
11.98	1.5149	.2360	.5175	1.4961	.3064	.5248	1.5139	.2397	.5179	1.0000	.1055	.0728	2.96
14.04	1.7012	.3261	.6111	1.6799	.3957	.6183	1.7001	.3297	.6115	1.0000	.1054	.0727	2.96
16.09	1.8692	.4241	.7071	1.8453	.4931	.7144	1.8679	.4278	.7075	1.0000	.1057	.0730	2.96
18.07	2.0024	.5268	.7901	1.9763	.5946	.7974	2.0011	.5302	.7905	1.0000	.1053	.0727	2.96
20.02	2.1223	.6312	.8948	2.0938	.6984	.9021	2.1207	.6348	.8952	1.0000	.1057	.0730	2.96
22.01	2.2371	.7474	1.0096	2.2062	.8137	1.0169	2.2354	.7511	1.0100	1.0000	.1059	.0731	2.96
24.03	2.3324	.8737	1.1084	2.2993	.9386	1.1157	2.3306	.8771	1.1088	1.0000	.1056	.0729	2.96
RUN = 411													
-3.70	.1740	-.0927	-.2411	.1739	.0443	-.2290	.1740	-.0942	-.2412	1.0000	.1978	.1370	3.76
-2.02	.2950	-.0947	-.1699	.2908	.0425	-.1578	.2950	-.0959	-.1700	1.0000	.1983	.1373	3.76
-.00	.4936	-.0897	-.0539	.4845	.0479	-.0418	.4937	-.0903	-.0539	1.0000	.1991	.1379	3.78
2.00	.6390	-.0742	.0297	.6252	.0631	.0418	.6391	-.0747	.0296	1.0000	.1993	.1380	3.78
3.99	.8269	-.0453	.1257	.8081	.0920	.1378	.8269	-.0451	.1257	1.0000	.2002	.1386	3.80
5.97	1.0262	-.0093	.2307	1.0026	.1279	.2428	1.0261	-.0085	.2307	1.0000	.2011	.1392	3.81
8.05	1.2041	.0431	.3180	1.1756	.1793	.3301	1.2040	.0438	.3180	1.0000	.2010	.1391	3.80
10.07	1.3959	.1086	.4170	1.3626	.2435	.4291	1.3958	.1091	.4170	1.0000	.2007	.1389	3.80
12.03	1.5876	.1873	.5034	1.5495	.3213	.5156	1.5873	.1881	.5035	1.0000	.2012	.1393	3.81
14.05	1.8144	.2812	.6014	1.7716	.4142	.6136	1.8140	.2824	.6015	1.0000	.2018	.1397	3.81
16.04	1.9706	.3797	.6839	1.9234	.5104	.6960	1.9704	.3802	.6839	1.0000	.2008	.1390	3.81
18.00	2.1064	.4834	.7596	2.0546	.6130	.7718	2.1060	.4845	.7597	1.0000	.2017	.1396	3.81
20.05	2.2340	.5971	.8655	2.1775	.7248	.8777	2.2335	.5983	.8656	1.0000	.2019	.1397	3.81
22.02	2.3579	.7152	.9806	2.2969	.8412	.9928	2.3572	.7166	.9807	1.0000	.2022	.1399	3.81
24.04	2.4587	.8462	1.0777	2.3935	.9695	1.0899	2.4582	.8471	1.0778	1.0000	.2016	.1395	3.81
16.07	1.9728	.3794	.6881	1.9255	.5103	.7003	1.9725	.3801	.6882	1.0000	.2011	.1392	3.81

TABLE 5.- CONTINUED.

VEO-WING 1/10-SCALE RESEARCH MODEL, VSTOL TEST NO. 204

ALPHA	CL	CD	CPM	CLE2	CDE2	CME2	CLCT	CDCT	CMCT	NPR	CT	CTRF	THETAJ
RUN = 412													
-3.68	.2111	-.2215	-.2770	.2100	.0360	-.2575	.2111	-.2237	-.2772	1.0000	.3967	.2575	3.93
-1.99	.3817	-.2223	-.1945	.3729	.0361	-.1749	.3817	-.2235	-.1946	1.0000	.3982	.2585	3.93
-.04	.5269	-.2140	-.1123	.5093	.0441	-.0927	.5270	-.2148	-.1123	1.0000	.3987	.2588	3.93
1.97	.6960	-.1972	-.0153	.6694	.0604	.0043	.6961	-.1977	-.0154	1.0000	.3993	.2590	3.94
4.04	.9193	-.1687	.1153	.8834	.0875	.1349	.9194	-.1693	.1152	1.0000	.3990	.2587	3.94
6.04	1.0699	-.1298	.1955	1.0249	.1257	.2151	1.0699	-.1297	.1955	1.0000	.4003	.2595	3.95
8.01	1.2735	-.0766	.2953	1.2197	.1778	.3149	1.2734	-.0758	.2953	1.0000	.4012	.2600	3.95
10.03	1.4835	-.0092	.3867	1.4206	.2436	.4065	1.4832	-.0079	.3869	1.0000	.4021	.2606	3.95
12.00	1.6858	.0692	.4751	1.6142	.3196	.4948	1.6854	.0703	.4752	1.0000	.4019	.2605	3.95
13.99	1.9006	.1653	.5687	1.8201	.4140	.5885	1.8999	.1674	.5689	1.0000	.4034	.2614	3.95
16.07	2.1117	.2780	.6763	2.0221	.5238	.6961	2.1109	.2802	.6765	1.0000	.4036	.2616	3.95
18.04	2.2259	.3843	.7493	2.1288	.6247	.7689	2.2258	.3844	.7493	1.0000	.4002	.2593	3.95
20.12	2.3694	.5066	.8658	2.2630	.7448	.8855	2.3687	.5082	.8659	1.0000	.4023	.2609	3.95
22.04	2.4705	.6196	.9556	2.3561	.8543	.9753	2.4697	.6213	.9557	1.0000	.4029	.2611	3.95
24.07	2.6015	.7619	1.0545	2.4788	.9924	1.0742	2.6006	.7636	1.0546	1.0000	.4030	.2611	3.95
RUN = 413													
-3.67	.2731	-.2810	-.2847	.2697	.0296	-.2605	.2732	-.2829	-.2849	1.0000	.4970	.3106	4.31
-2.03	.3804	-.2755	-.2387	.3680	.0345	-.2145	.3804	-.2777	-.2389	1.0000	.4964	.3102	4.31
-.01	.5736	-.2670	-.1288	.5502	.0434	-.1045	.5737	-.2681	-.1289	1.0000	.4982	.3113	4.32
1.98	.8208	-.2499	.0238	.7868	.0587	.0480	.8210	-.2518	.0236	1.0000	.4969	.3104	4.32
4.02	.9764	-.2200	.1183	.9313	.0881	.1426	.9765	-.2208	.1182	1.0000	.4988	.3114	4.32
6.03	1.1132	-.1802	.1868	1.0573	.1259	.2111	1.1134	-.1813	.1867	1.0000	.4983	.3111	4.32
8.03	1.2935	-.1278	.2745	1.2270	.1758	.2987	1.2938	-.1292	.2743	1.0000	.4977	.3108	4.32
10.02	1.5344	-.0558	.3819	1.4574	.2457	.4062	1.5346	-.0567	.3818	1.0000	.4986	.3113	4.32
12.03	1.7558	.0291	.4780	1.6679	.3286	.5024	1.7558	.0290	.4780	1.0000	.5000	.3121	4.32
14.04	1.9530	.1241	.5646	1.8547	.4202	.5890	1.9531	.1240	.5646	1.0000	.4999	.3120	4.32
16.01	2.1345	.2236	.6513	2.0262	.5159	.6757	2.1347	.2232	.6513	1.0000	.4993	.3117	4.32
18.02	2.2671	.3356	.7484	2.1481	.6252	.7729	2.2667	.3365	.7485	1.0000	.5015	.3130	4.32
20.06	2.4105	.4584	.8684	2.2811	.7439	.8929	2.4100	.4596	.8685	1.0000	.5021	.3134	4.32
22.05	2.5136	.5796	.9609	2.3754	.8584	.9853	2.5140	.5788	.9608	1.0000	.4985	.3112	4.32
24.04	2.6250	.7118	1.0478	2.4766	.9867	1.0722	2.6248	.7121	1.0478	1.0000	.5005	.3124	4.32
RUN = 414													
8.02	1.1035	.1655	.3223	1.1035	.1655	.3223	1.1035	.1655	.3223	1.0000	0.0000	0.0000	0.00
8.02	1.1023	.1452	.3096	1.0991	.1613	.3111	1.0991	.1613	.3111	1.0000	.0300	.0163	3.43
8.02	1.1316	.1272	.3080	1.1240	.1653	.3117	1.1240	.1653	.3117	1.0000	.0596	.0388	3.25
8.03	1.1616	.0956	.3078	1.1477	.1668	.3150	1.1609	.0991	.3081	1.0000	.1053	.0726	2.96
8.04	1.1881	.0361	.2927	1.1594	.1727	.3048	1.1878	.0373	.2928	1.0000	.2018	.1396	3.81
8.05	1.2841	-.0705	.2922	1.2302	.1828	.3117	1.2841	-.0709	.2921	1.0000	.3995	.2590	3.94
8.03	1.3296	-.1180	.2787	1.2630	.1864	.3031	1.3297	-.1185	.2787	1.0000	.4992	.3116	4.32
8.05	1.4731	-.2345	.2567	1.3676	.2043	.2982	1.4731	-.2346	.2567	1.0000	.7999	.4513	5.47
8.01	1.5762	-.4421	.2295	1.4193	.1965	.2922	1.5769	-.4449	.2293	1.0000	1.1946	.6575	5.79

TABLE 5.- CONTINUED.

VEO-WING 1/10-SCALE RESEARCH MODEL, VSTOL TEST NO. 204

ALPHA	CL	CD	CPM	CLE2	CDE2	CME2	CLCT	CDCT	CMCT	NPR	CT	CTRF	THETAJ
RUN = 415													
16.03	1.7171	.4482	.7361	1.7171	.4482	.7361	1.7171	.4482	.7361	1.0000	0.0000	0.0000	0.00
16.04	1.7482	.4363	.7249	1.7427	.4519	.7264	1.7427	.4519	.7264	1.0000	.0303	.0166	3.43
16.04	1.7925	.4244	.7109	1.7797	.4609	.7147	1.7797	.4609	.7147	1.0000	.0594	.0387	3.26
16.05	1.8564	.4081	.6955	1.8334	.4750	.7025	1.8558	.4099	.6956	1.0000	.1026	.0707	2.97
16.06	1.9306	.3688	.6797	1.9328	.5008	.6919	1.9799	.3706	.6798	1.0000	.2028	.1403	3.83
16.04	2.0818	.2669	.6555	1.9933	.5105	.6751	2.0819	.2667	.6555	1.0000	.3996	.2592	3.94
16.06	2.1490	.2298	.6786	2.0411	.5204	.7028	2.1499	.2275	.6784	1.0000	.4961	.3099	4.31
16.02	2.2020	.1011	.6902	2.0370	.5201	.7317	2.2024	.1003	.6902	1.0000	.7985	.4503	5.48
16.04	2.3211	-.0873	.6983	2.0764	.5235	.7611	2.3220	-.0896	.6981	1.0000	1.1956	.6580	5.79
RUN = 416													
-3.70	.2850	.0765	-.2729	.2850	.0765	-.2729	.2850	.0765	-.2729	1.0000	0.0000	0.0000	0.00
-2.00	.4247	.0792	-.1897	.4247	.0792	-.1897	.4247	.0792	-.1897	1.0000	0.0000	0.0000	0.00
-.01	.5602	.0889	-.1004	.5602	.0889	-.1004	.5602	.0889	-.1004	1.0000	0.0000	0.0000	0.00
2.00	.7205	.1097	-.0041	.7205	.1097	-.0041	.7205	.1097	-.0041	1.0000	0.0000	0.0000	0.00
3.98	.9019	.1410	.0943	.9019	.1410	.0943	.9019	.1410	.0943	1.0000	0.0000	0.0000	0.00
6.01	1.0995	.1841	.2060	1.0995	.1841	.2060	1.0995	.1841	.2060	1.0000	0.0000	0.0000	0.00
8.04	1.2662	.2307	.3213	1.2662	.2307	.3213	1.2662	.2307	.3213	1.0000	0.0000	0.0000	0.00
10.10	1.4301	.2996	.4151	1.4301	.2996	.4151	1.4301	.2996	.4151	1.0000	0.0000	0.0000	0.00
12.04	1.5748	.3746	.5088	1.5748	.3746	.5088	1.5748	.3746	.5088	1.0000	0.0000	0.0000	0.00
14.01	1.7219	.4568	.6152	1.7219	.4568	.6152	1.7219	.4568	.6152	1.0000	0.0000	0.0000	0.00
15.99	1.8410	.5445	.7107	1.8410	.5445	.7107	1.8410	.5445	.7107	1.0000	0.0000	0.0000	0.00
18.04	1.9552	.6429	.8121	1.9552	.6429	.8121	1.9552	.6429	.8121	1.0000	0.0000	0.0000	0.00
20.02	2.0689	.7486	.9301	2.0689	.7486	.9301	2.0689	.7486	.9301	1.0000	0.0000	0.0000	0.00
22.06	2.1522	.8566	1.0363	2.1522	.8566	1.0363	2.1522	.8566	1.0363	1.0000	0.0000	0.0000	0.00
24.04	2.2372	.9796	1.1330	2.2372	.9796	1.1330	2.2372	.9796	1.1330	1.0000	0.0000	0.0000	0.00
RUN = 418													
-3.67	.3522	-.0086	-.2672	.3531	.0628	-.2619	.3522	-.0059	-.2670	1.0000	.1039	.0714	2.93
-2.02	.4673	-.0041	-.2013	.4661	.0674	-.1959	.4672	-.0014	-.2011	1.0000	.1040	.0715	2.94
-.00	.6368	.0080	-.0985	.6330	.0797	-.0931	.6366	.0110	-.0983	1.0000	.1044	.0718	2.96
1.97	.7766	.0277	-.0164	.7704	.0995	-.0109	.7763	.0310	-.0161	1.0000	.1049	.0721	2.98
3.99	.9285	.0567	.0685	.9197	.1282	.0740	.9281	.0600	.0687	1.0000	.1048	.0720	2.99
6.03	1.1288	.0991	.1818	1.1174	.1707	.1874	1.1282	.1027	.1821	1.0000	.1053	.0724	3.01
8.02	1.3132	.1534	.2741	1.2994	.2246	.2797	1.3125	.1571	.2744	1.0000	.1054	.0725	3.02
10.03	1.4756	.2197	.3641	1.4593	.2902	.3696	1.4748	.2231	.3643	1.0000	.1051	.0723	3.00
12.06	1.6821	.3078	.4881	1.6633	.3777	.4937	1.6812	.3113	.4884	1.0000	.1053	.0724	3.00
14.00	1.8573	.4013	.5721	1.8361	.4706	.5776	1.8562	.4048	.5724	1.0000	.1053	.0724	3.00
16.04	2.0372	.5048	.6747	2.0135	.5733	.6803	2.0360	.5083	.6749	1.0000	.1053	.0724	3.02
18.03	2.1623	.6115	.7597	2.1362	.6794	.7654	2.1609	.6151	.7600	1.0000	.1057	.0727	3.02
20.06	2.2878	.7290	.8789	2.2594	.7958	.8845	2.2864	.7325	.8792	1.0000	.1055	.0726	3.00
22.09	2.3698	.8448	.9822	2.3391	.9105	.9878	2.3682	.8482	.9825	1.0000	.1055	.0725	3.00
24.04	2.4745	.9735	1.1071	2.4417	1.0377	1.1126	2.4730	.9765	1.1074	1.0000	.1049	.0721	2.99

TABLE 5.- CONTINUED.

VEO-WING 1/10-SCALE RESEARCH MODEL, VSTOL TEST NO. 204

ALPHA	CL	CD	CPM	CLE2	CDE2	CME2	CLCT	CDCT	CMCT	NPR	CT	CTRF	THETAJ
RUN = 419													
-3.65	.3640	-.0741	-.2906	.3652	.0671	-.2769	.3641	-.0697	-.2902	1.0000	.2064	.1412	3.17
-2.00	.5052	-.0705	-.2034	.5023	.0709	-.1896	.5051	-.0658	-.2029	1.0000	.2069	.1415	3.16
.04	.6637	-.0567	-.1176	.6558	.0844	-.1038	.6634	-.0522	-.1172	1.0000	.2066	.1413	3.17
2.02	.7994	-.0353	-.0345	.7866	.1050	-.0208	.7990	-.0312	-.0341	1.0000	.2061	.1409	3.17
4.00	1.0233	-.0047	.0881	1.0056	.1355	.1018	1.0227	-.0002	.0885	1.0000	.2066	.1413	3.16
5.99	1.1816	.0384	.1712	1.1591	.1779	.1849	1.1809	.0429	.1716	1.0000	.2066	.1413	3.16
8.04	1.3897	.0980	.2783	1.3623	.2363	.2920	1.3889	.1021	.2787	1.0000	.2061	.1410	3.16
10.00	1.5558	.1655	.3677	1.5236	.3032	.3815	1.5548	.1701	.3682	1.0000	.2068	.1414	3.16
12.00	1.7460	.2492	.4560	1.7090	.3860	.4699	1.7447	.2540	.4565	1.0000	.2073	.1417	3.16
14.02	1.9599	.3495	.5464	1.9179	.4851	.5602	1.9583	.3545	.5469	1.0000	.2077	.1420	3.16
16.05	2.1269	.4563	.6399	2.0805	.5896	.6536	2.1255	.4604	.6403	1.0000	.2064	.1411	3.16
18.02	2.2956	.5748	.7431	2.2445	.7066	.7569	2.2939	.5790	.7436	1.0000	.2066	.1413	3.16
20.07	2.4067	.6900	.8484	2.3509	.8200	.8622	2.4049	.6943	.8489	1.0000	.2069	.1415	3.17
22.02	2.5088	.8109	.9671	2.4489	.9382	.9803	2.5071	.8144	.9674	1.0000	.2057	.1407	3.17
24.01	2.5901	.9379	1.0644	2.5258	1.0631	1.0781	2.5883	.9414	1.0648	1.0000	.2057	.1407	3.17
RUN = 420													
-3.73	.4554	-.1946	-.3104	.4569	.0669	-.2873	.4554	-.1914	-.3101	1.0000	.4049	.2615	3.39
-1.93	.5653	-.1853	-.2521	.5587	.0768	-.2289	.5652	-.1815	-.2517	1.0000	.4058	.2621	3.39
.03	.7334	-.1732	-.1495	.7177	.0883	-.1264	.7331	-.1695	-.1492	1.0000	.4057	.2620	3.39
1.99	.9118	-.1516	-.0431	.8872	.1091	-.0199	.9114	-.1480	-.0427	1.0000	.4055	.2618	3.40
4.03	1.0871	-.1159	.0563	1.0531	.1448	.0795	1.0865	-.1112	.0567	1.0000	.4072	.2628	3.40
6.04	1.2777	-.0715	.1619	1.2345	.1884	.1852	1.2768	-.0662	.1624	1.0000	.4084	.2635	3.41
8.03	1.4573	-.0109	.2452	1.4052	.2467	.2684	1.4564	-.0063	.2456	1.0000	.4072	.2628	3.40
10.03	1.6532	.0600	.3348	1.5921	.3159	.3581	1.6520	.0649	.3353	1.0000	.4079	.2631	3.41
12.05	1.8886	.1496	.4406	1.8181	.4043	.4639	1.8870	.1557	.4411	1.0000	.4093	.2644	3.41
14.04	2.0826	.2546	.5200	2.0049	.5025	.5429	2.0823	.2556	.5201	1.0000	.4015	.2598	3.36
16.01	2.2756	.3643	.6198	2.1894	.6095	.6428	2.2752	.3654	.6199	1.0000	.4019	.2600	3.36
18.02	2.4121	.4765	.7149	2.3170	.7195	.7380	2.4113	.4786	.7151	1.0000	.4034	.2609	3.36
20.01	2.5302	.5954	.8246	2.4273	.8334	.8475	2.5299	.5959	.8247	1.0000	.4010	.2593	3.36
22.03	2.6332	.7180	.9283	2.5213	.9537	.9513	2.6322	.7201	.9285	1.0000	.4035	.2609	3.37
24.01	2.7448	.8605	1.0374	2.6253	1.0914	1.0603	2.7442	.8617	1.0375	1.0000	.4020	.2600	3.37

TABLE 5.- CONTINUED.

VEO-WING 1/10-SCALE RESEARCH MODEL, VSTOL TEST NO. 204

ALPHA	CL	CD	CPM	CLE2	CDE2	CME2	CLCT	CDCT	CMCT	NPR	CT	CTRF	THETAJ
RUN = 421													
-3.63	.4987	-.2486	-.3428	.4978	.0634	-.3152	.4988	-.2502	-.3429	1.0000	.4975	.3120	3.81
-2.02	.6267	-.2410	-.2655	.6170	.0713	-.2379	.6268	-.2421	-.2656	1.0000	.4982	.3124	3.81
-.08	.7690	-.2269	-.1821	.7487	.0850	-.1544	.7691	-.2277	-.1821	1.0000	.4986	.3126	3.81
1.96	.9251	-.2043	-.0844	.8936	.1073	-.0567	.9251	-.2045	-.0844	1.0000	.4998	.3132	3.81
4.04	1.1245	-.1665	.0374	1.0818	.1435	.0651	1.1246	-.1669	.0374	1.0000	.4995	.3130	3.81
6.00	1.3307	-.1182	.1495	1.2774	.1899	.1772	1.3308	-.1188	.1495	1.0000	.4990	.3126	3.81
7.99	1.5188	-.0564	.2371	1.4549	.2494	.2647	1.5189	-.0572	.2370	1.0000	.4987	.3125	3.81
10.10	1.7477	.0189	.3421	1.6722	.3238	.3699	1.7474	.0198	.3422	1.0000	.5015	.3141	3.81
12.09	1.9445	.1098	.4298	1.8584	.4120	.4575	1.9442	.1108	.4298	1.0000	.5017	.3142	3.81
14.06	2.1620	.2096	.5247	2.0654	.5093	.5525	2.1615	.2114	.5249	1.0000	.5030	.3150	3.81
16.04	2.3353	.3217	.6200	2.2287	.6169	.6478	2.3351	.3224	.6201	1.0000	.5012	.3139	3.81
18.06	2.4574	.4306	.7124	2.3402	.7226	.7402	2.4568	.4321	.7125	1.0000	.5025	.3147	3.81
20.06	2.5754	.5537	.8283	2.4486	.8403	.8560	2.5753	.5540	.8283	1.0000	.5005	.3134	3.81
22.05	2.6809	.6794	.9395	2.5441	.9617	.9672	2.6807	.6798	.9395	1.0000	.5008	.3137	3.81
24.00	2.7842	.8145	1.0378	2.6377	1.0923	1.0655	2.7838	.8154	1.0379	1.0000	.5016	.3141	3.81
RUN = 422													
7.99	1.2363	.2237	.2852	1.2363	.2237	.2852	1.2363	.2237	.2852	1.0000	0.0000	0.0000	0.00
8.00	1.2621	.2011	.2836	1.2598	.2199	.2863	1.2593	.2199	.2863	1.0000	.0313	.0189	-.93
8.00	1.2936	.1840	.2763	1.2877	.2235	.2794	1.2877	.2235	.2794	1.0000	.0599	.0399	.61
8.01	1.3467	.1622	.2795	1.3338	.2297	.2844	1.3467	.1623	.2795	1.0000	.1001	.0687	2.80
8.01	1.3468	.1018	.2437	1.3205	.2343	.2569	1.3472	.0999	.2435	1.0000	.1971	.1350	3.23
8.02	1.4710	-.0043	.2461	1.4199	.2496	.2690	1.4710	-.0041	.2461	1.0000	.4003	.2590	3.36
8.02	1.5097	-.0499	.2310	1.4458	.2554	.2586	1.5101	-.0514	.2309	1.0000	.4976	.3119	3.81
8.05	1.6320	-.1709	.2331	1.5317	.2723	.2762	1.6329	-.1749	.2327	1.0000	.7929	.4544	4.71
8.02	1.7549	-.3791	.1998	1.6040	.2709	.2655	1.7556	-.3820	.1995	1.0000	1.1945	.6673	5.05
RUN = 423													
16.05	1.8571	.5364	.7059	1.8571	.5364	.7059	1.8571	.5364	.7059	1.0000	0.0000	0.0000	0.00
16.05	1.8896	.5248	.6937	1.8850	.5420	.6964	1.8850	.5420	.6964	1.0000	.0297	.0178	-.99
16.06	1.9558	.5164	.6874	1.9443	.5547	.6904	1.9443	.5547	.6904	1.0000	.0601	.0400	.61
16.06	2.0284	.5020	.6606	2.0053	.5692	.6659	2.0276	.5042	.6607	1.0000	.1033	.0710	2.93
16.03	2.0414	.4905	.6492	2.0137	.5685	.6570	2.0367	.5036	.6505	1.0000	.1201	.0828	3.52
16.04	2.1007	.4736	.6419	2.0632	.5794	.6532	2.0862	.5145	.6463	1.0000	.1630	.1122	3.54
16.04	2.1323	.4600	.6364	2.0879	.5872	.6496	2.1331	.4579	.6362	1.0000	.1968	.1348	3.23
16.01	2.2712	.3648	.6178	2.1863	.6067	.6405	2.2721	.3622	.6176	1.0000	.3956	.2563	3.33
16.05	2.3296	.3247	.6168	2.2234	.6186	.6444	2.3299	.3239	.6167	1.0000	.4986	.3125	3.81
16.05	2.4049	.2010	.6465	2.2437	.6265	.6896	2.4062	.1976	.6461	1.0000	.7937	.4550	4.71
16.01	2.5122	.0043	.6604	2.2722	.6273	.7261	2.5131	.0020	.6602	1.0000	1.1955	.6676	5.06

TABLE 5.- CONTINUED.

VEO-WING 1/10-SCALE RESEARCH MODEL, VSTOL TEST NO. 204

ALPHA	CL	CD	CPM	CLE2	CDE2	CME2	CLCT	CDCT	CMCT	NPR	CT	CTRF	THETAJ
RUN = 424													
-3.76	-.1437	.0431	-.1754	-.1437	.0431	-.1754	-.1437	.0431	-.1754	1.0000	0.0000	0.0000	0.00
-2.00	-.0271	.0330	-.1104	-.0271	.0330	-.1104	-.0271	.0330	-.1104	1.0000	0.0000	0.0000	0.00
-.00	.1515	.0304	-.0052	.1515	.0304	-.0052	.1515	.0304	-.0052	1.0000	0.0000	0.0000	0.00
1.92	.3022	.0354	.0832	.3022	.0354	.0832	.3022	.0354	.0832	1.0000	0.0000	0.0000	0.00
3.98	.4749	.0513	.1944	.4749	.0513	.1944	.4749	.0513	.1944	1.0000	0.0000	0.0000	0.00
5.98	.6248	.0752	.2893	.6248	.0752	.2893	.6248	.0752	.2893	1.0000	0.0000	0.0000	0.00
8.02	.8174	.1114	.4013	.8174	.1114	.4013	.8174	.1114	.4013	1.0000	0.0000	0.0000	0.00
10.04	.9984	.1608	.4962	.9984	.1608	.4962	.9984	.1608	.4962	1.0000	0.0000	0.0000	0.00
12.00	1.1693	.2243	.5891	1.1693	.2243	.5891	1.1693	.2243	.5891	1.0000	0.0000	0.0000	0.00
14.05	1.3530	.3026	.6935	1.3530	.3026	.6935	1.3530	.3026	.6935	1.0000	0.0000	0.0000	0.00
16.00	1.4741	.3799	.7784	1.4741	.3799	.7784	1.4741	.3799	.7784	1.0000	0.0000	0.0000	0.00
18.02	1.5833	.4622	.8657	1.5833	.4622	.8657	1.5833	.4622	.8657	1.0000	0.0000	0.0000	0.00
20.00	1.7043	.5551	.9757	1.7043	.5551	.9757	1.7043	.5551	.9757	1.0000	0.0000	0.0000	0.00
21.99	1.8223	.6584	1.0886	1.8223	.6584	1.0886	1.8223	.6584	1.0886	1.0000	0.0000	0.0000	0.00
24.05	1.9185	.7741	1.1750	1.9185	.7741	1.1750	1.9185	.7741	1.1750	1.0000	0.0000	0.0000	0.00
RUN = 426													
-3.83	-.1457	-.0345	-.1866	-.1436	.0360	-.1786	-.1457	-.0331	-.1864	1.0000	.1022	.0706	2.10
-2.05	.0051	-.0425	-.1051	.0051	.0261	-.0973	.0051	-.0429	-.1052	1.0000	.0994	.0686	2.01
-2.04	.0291	-.0441	-.0838	.0291	.0244	-.0760	.0291	-.0446	-.0839	1.0000	.0993	.0685	2.00
-.04	.1692	-.0443	-.0079	.1669	.0236	-.0001	.1692	-.0453	-.0081	1.0000	.0985	.0679	1.98
2.00	.3296	-.0371	.0773	.3249	.0304	.0851	.3297	-.0384	.0772	1.0000	.0981	.0676	1.96
4.04	.5087	-.0257	.1763	.5009	.0463	.1844	.5084	-.0225	.1767	1.0000	.1046	.0724	2.18
6.03	.7424	.0043	.3100	.7320	.0760	.3181	.7419	.0075	.3104	1.0000	.1047	.0725	2.19
8.00	.8583	.0423	.3654	.8454	.1137	.3735	.8577	.0456	.3658	1.0000	.1048	.0726	2.19
10.09	1.0799	.0975	.4889	1.0644	.1689	.4971	1.0791	.1012	.4893	1.0000	.1055	.0730	2.20
12.06	1.2542	.1615	.5854	1.2362	.2323	.5936	1.2533	.1652	.5858	1.0000	.1055	.0731	2.21
14.06	1.4118	.2355	.6668	1.3913	.3058	.6750	1.4107	.2393	.6672	1.0000	.1057	.0732	2.21
16.05	1.5904	.3225	.7569	1.5674	.3923	.7651	1.5891	.3265	.7574	1.0000	.1061	.0735	2.21
18.04	1.7326	.4180	.8420	1.7071	.4872	.8502	1.7311	.4222	.8425	1.0000	.1064	.0737	2.21
20.04	1.8679	.5198	.9453	1.8401	.5877	.9535	1.8663	.5236	.9458	1.0000	.1059	.0733	2.21
22.06	1.9840	.6292	1.0405	1.9537	.6963	1.0487	1.9822	.6331	1.0410	1.0000	.1062	.0735	2.21
24.08	2.1128	.7586	1.1376	2.0803	.8244	1.1458	2.1110	.7623	1.1380	1.0000	.1059	.0734	2.21

TABLE 5.- CONTINUED.

VED-WING 1/10-SCALE RESEARCH MODEL, VSTOL TEST NO. 204

ALPHA	CL	CD	CPM	CLE2	CDE2	CME2	CLCT	CDCT	CMCT	NPR	CT	CTRF	THETAJ
RUN = 427													
-3.83	-.1424	-.0916	-.1961	-.1401	.0486	-.1849	-.1424	-.0908	-.1960	1.0000	.2012	.1402	2.89
-1.98	.0495	-.1042	-.0833	.0472	.0372	-.0721	.0494	-.1021	-.0832	1.0000	.2030	.1414	2.89
-.02	.2175	-.1046	.0084	.2104	.0362	.0196	.2174	-.1029	.0086	1.0000	.2025	.1411	2.89
2.04	.3765	-.0972	.0960	.3642	.0450	.1073	.3762	-.0938	.0962	1.0000	.2049	.1427	2.89
3.99	.5548	-.0799	.1933	.5378	.0615	.2046	.5545	-.0768	.1936	1.0000	.2045	.1424	2.89
6.04	.7401	-.0510	.2926	.7179	.0899	.3040	.7396	-.0477	.2929	1.0000	.2048	.1426	2.89
8.05	.9094	-.0124	.3861	.8823	.1277	.3975	.9088	-.0090	.3864	1.0000	.2049	.1427	2.89
10.05	1.0942	.0423	.4767	1.0622	.1815	.4880	1.0934	.0458	.4770	1.0000	.2051	.1428	2.89
12.01	1.2945	.1097	.5699	1.2578	.2478	.5812	1.2936	.1132	.5702	1.0000	.2053	.1430	2.89
14.04	1.4808	.1886	.6540	1.4392	.3253	.6654	1.4797	.1921	.6543	1.0000	.2052	.1429	2.89
16.05	1.6840	.2841	.7451	1.6374	.4200	.7565	1.6826	.2882	.7455	1.0000	.2063	.1437	2.89
18.03	1.8359	.3845	.8260	1.7846	.5184	.8373	1.8344	.3884	.8263	1.0000	.2060	.1434	2.89
20.05	1.9597	.4857	.9159	1.9038	.6179	.9273	1.9581	.4897	.9162	1.0000	.2061	.1435	2.89
22.02	2.0856	.5985	1.0123	2.0248	.7293	1.0237	2.0834	.6030	1.0127	1.0000	.2072	.1443	2.89
24.06	2.2390	.7394	1.1060	2.1738	.8675	1.1174	2.2370	.7434	1.1064	1.0000	.2064	.1437	2.89
RUN = 428													
-3.82	-.1050	-.2053	-.2132	-.1004	.0536	-.1936	-.1051	-.2100	-.2136	1.0000	.3929	.2588	2.80
-2.03	.0691	-.2160	-.1220	.0657	.0422	-.1024	.0692	-.2214	-.1224	1.0000	.3918	.2582	2.80
-.02	.2494	-.2178	-.0286	.2368	.0415	-.0089	.2496	-.2216	-.0289	1.0000	.3942	.2596	2.80
2.02	.4728	-.2089	.0939	.4510	.0500	.1136	.4731	-.2124	.0936	1.0000	.3947	.2599	2.80
3.99	.6258	-.1896	.1811	.5951	.0686	.2008	.6262	-.1929	.1808	1.0000	.3949	.2600	2.80
6.03	.7940	-.1625	.2761	.7540	.0949	.2959	.7944	-.1653	.2758	1.0000	.3958	.2605	2.80
7.99	.9643	-.1226	.3639	.9155	.1330	.3836	.9648	-.1256	.3636	1.0000	.3953	.2602	2.80
9.99	1.1891	-.0637	.4553	1.1314	.1903	.4851	1.1897	-.0664	.4651	1.0000	.3958	.2605	2.80
12.07	1.3928	.0067	.5533	1.3259	.2585	.5781	1.3935	.0042	.5581	1.0000	.3961	.2606	2.80
14.00	1.5654	.0832	.6335	1.4900	.3330	.6533	1.5660	.0812	.6333	1.0000	.3967	.2610	2.80
16.04	1.7930	.1853	.7351	1.7085	.4331	.7550	1.7934	.1841	.7350	1.0000	.3980	.2618	2.80
18.04	1.9443	.2886	.8170	1.8514	.5327	.8369	1.9450	.2868	.8169	1.0000	.3970	.2611	2.80
20.06	2.0692	.3959	.9074	1.9676	.6369	.9273	2.0698	.3945	.9073	1.0000	.3976	.2615	2.80
22.06	2.1769	.5056	.9915	2.0669	.7430	1.0115	2.1774	.5044	.9914	1.0000	.3980	.2617	2.79
24.05	2.3534	.6537	1.0921	2.2350	.8877	1.1120	2.3538	.6530	1.0920	1.0000	.3988	.2622	2.80

TABLE 5.- CONTINUED.

VEO-WING 1/10-SCALE RESEARCH MODEL, VSTOL TEST NO. 204

ALPHA	CL	CD	CPM	CLE2	CDE2	CME2	CLCT	CDCT	CMCT	NPR	CT	CTRF	THETAJ
RUN = 429													
-3.80	-.0431	-.2748	-.2101	-.0390	.0456	-.1843	-.0431	-.2710	-.2098	1.0000	.5060	.3204	3.06
-1.98	.1018	-.2817	-.1379	.0957	.0383	-.1122	.1018	-.2782	-.1376	1.0000	.5056	.3200	3.08
-.03	.2864	-.2816	-.0439	.2693	.0397	-.0180	.2861	-.2763	-.0435	1.0000	.5084	.3217	3.09
1.98	.5033	-.2718	.0684	.4749	.0489	.0943	.5028	-.2662	.0689	1.0000	.5088	.3219	3.09
3.97	.6432	-.2509	.1489	.6035	.0690	.1749	.6425	-.2448	.1494	1.0000	.5096	.3223	3.11
6.00	.8201	-.2148	.2547	.7710	.0961	.2799	.8205	-.2176	.2545	1.0000	.4957	.3148	2.97
7.99	1.0233	-.1732	.3595	.9633	.1366	.3848	1.0237	-.1752	.3594	1.0000	.4968	.3155	2.97
10.02	1.2437	-.1125	.4572	1.1729	.1949	.4824	1.2442	-.1148	.4570	1.0000	.4962	.3154	2.95
11.99	1.4334	-.0416	.5475	1.3526	.2616	.5725	1.4345	-.0456	.5471	1.0000	.4935	.3138	2.93
14.08	1.6562	.0462	.6432	1.5647	.3453	.6732	1.6577	.0412	.6477	1.0000	.4918	.3128	2.92
16.09	1.8444	.1423	.7391	1.7425	.4383	.7641	1.8461	.1373	.7387	1.0000	.4918	.3131	2.90
18.07	2.0022	.2496	.8255	1.8908	.5405	.8504	2.0047	.2432	.8250	1.0000	.4891	.3115	2.89
20.04	2.1194	.3543	.9160	1.9986	.6400	.9408	2.1227	.3465	.9154	1.0000	.4868	.3102	2.87
22.02	2.2193	.4519	.9925	2.0334	.7421	1.0183	2.2176	.4554	.9928	1.0000	.5061	.3205	3.06
24.12	2.3937	.6088	1.1056	2.2476	.8933	1.1313	2.3922	.6117	1.1058	1.0000	.5051	.3199	3.06
RUN = 430													
8.02	.8154	.1102	.3964	.8154	.1102	.3964	.8154	.1102	.3964	1.0000	0.0000	0.0000	0.00
8.02	.8243	.0889	.3765	.8220	.1067	.3778	.8220	.1067	.3778	1.0000	.0322	.0180	-.67
8.02	.8237	.0712	.3560	.8180	.1095	.3701	.8180	.1095	.3701	1.0000	.0594	.0387	.36
8.03	.8628	.0460	.3743	.8509	.1132	.3821	.8629	.0453	.3742	1.0000	.0969	.0682	1.99
8.04	.9185	-.0186	.3813	.8917	.1200	.3925	.9181	-.0167	.3814	1.0000	.2028	.1412	2.39
8.05	.9877	-.1279	.3645	.9378	.1326	.3848	.9872	-.1251	.3648	1.0000	.4043	.2652	2.79
8.06	1.0240	-.1743	.3523	.9631	.1372	.3778	1.0240	-.1741	.3524	1.0000	.5004	.3174	3.01
8.00	1.1640	-.2911	.3438	1.0685	.1554	.3869	1.1650	-.2959	.3433	1.0000	.7916	.4566	4.07
8.00	1.2628	-.4989	.3190	1.1143	.1570	.3842	1.2630	-.4997	.3190	1.0000	1.1985	.6725	4.76
RUN = 431													
16.01	1.4651	.3729	.7672	1.4651	.3729	.7672	1.4651	.3729	.7672	1.0000	0.0000	0.0000	0.00
16.03	1.5035	.3613	.7709	1.4987	.3787	.7723	1.4987	.3787	.7723	1.0000	.0324	.0180	-.67
16.04	1.5386	.3486	.7669	1.5273	.3868	.7712	1.5273	.3868	.7712	1.0000	.0609	.0399	.43
16.04	1.5949	.3284	.7578	1.5725	.3966	.7659	1.5940	.3309	.7581	1.0000	.1038	.0717	2.15
16.06	1.6960	.2845	.7467	1.6505	.4171	.7579	1.6957	.2855	.7468	1.0000	.2015	.1403	2.89
16.04	1.7710	.1752	.7258	1.6856	.4259	.7460	1.7703	.1775	.7259	1.0000	.4036	.2648	2.79
16.05	1.8177	.1326	.7265	1.7136	.4337	.7520	1.8172	.1341	.7266	1.0000	.5026	.3187	3.02
16.06	1.9227	.0243	.7541	1.7652	.4540	.7973	1.9240	.0206	.7537	1.0000	.7932	.4576	4.07

TABLE 5.- CONTINUED.

VEO-WING 1/10-SCALE RESEARCH MODEL, VSTOL TEST NO. 204

ALPHA	CL	CD	CPM	CLE2	CDE2	CME2	CLCT	CDCT	CMCT	NPR	CT	CTRF	THETAJ
RUN = 432													
-3.85	-.1630	.0465	-.1908	-.1630	.0465	-.1908	-.1630	.0465	-.1908	1.0000	0.0000	0.0000	0.00
-2.04	-.0046	.0363	-.0975	-.0046	.0363	-.0975	-.0046	.0363	-.0975	1.0000	0.0000	0.0000	0.00
-.03	.1552	.0322	-.0037	.1552	.0322	-.0037	.1552	.0322	-.0037	1.0000	0.0000	0.0000	0.00
2.01	.3158	.0373	.0897	.3158	.0373	.0897	.3158	.0373	.0897	1.0000	0.0000	0.0000	0.00
4.00	.4908	.0527	.1960	.4908	.0527	.1960	.4908	.0527	.1960	1.0000	0.0000	0.0000	0.00
6.03	.6669	.0781	.3021	.6669	.0781	.3021	.6669	.0781	.3021	1.0000	0.0000	0.0000	0.00
8.00	.8291	.1128	.3955	.8291	.1128	.3955	.8291	.1128	.3955	1.0000	0.0000	0.0000	0.00
10.05	.9822	.1623	.4826	.9822	.1623	.4826	.9822	.1623	.4826	1.0000	0.0000	0.0000	0.00
12.02	1.1640	.2226	.5874	1.1640	.2226	.5874	1.1640	.2226	.5874	1.0000	0.0000	0.0000	0.00
14.05	1.3144	.2923	.6790	1.3144	.2923	.6790	1.3144	.2923	.6790	1.0000	0.0000	0.0000	0.00
16.02	1.4704	.3751	.7758	1.4704	.3751	.7758	1.4704	.3751	.7758	1.0000	0.0000	0.0000	0.00
18.08	1.5919	.4608	.8788	1.5919	.4608	.8788	1.5919	.4608	.8788	1.0000	0.0000	0.0000	0.00
20.03	1.6932	.5486	.9759	1.6932	.5486	.9759	1.6932	.5486	.9759	1.0000	0.0000	0.0000	0.00
22.05	1.8007	.6479	1.0818	1.8007	.6479	1.0818	1.8007	.6479	1.0818	1.0000	0.0000	0.0000	0.00
24.04	1.9022	.7604	1.1670	1.9022	.7604	1.1670	1.9022	.7604	1.1670	1.0000	0.0000	0.0000	0.00
RUN = 433													
-3.80	.1269	.0520	-.2516	.1269	.0520	-.2516	.1269	.0520	-.2516	1.0000	0.0000	0.0000	0.00
-2.04	.2954	.0482	-.1487	.2954	.0482	-.1487	.2954	.0482	-.1487	1.0000	0.0000	0.0000	0.00
.00	.4450	.0543	-.0584	.4450	.0543	-.0584	.4450	.0543	-.0584	1.0000	0.0000	0.0000	0.00
2.00	.5893	.0684	.0263	.5893	.0684	.0263	.5893	.0684	.0263	1.0000	0.0000	0.0000	0.00
4.00	.7533	.0911	.1307	.7533	.0911	.1307	.7533	.0911	.1307	1.0000	0.0000	0.0000	0.00
6.00	.9400	.1268	.2377	.9400	.1268	.2377	.9400	.1268	.2377	1.0000	0.0000	0.0000	0.00
8.00	1.0880	.1708	.3269	1.0880	.1708	.3269	1.0880	.1708	.3269	1.0000	0.0000	0.0000	0.00
10.01	1.2610	.2280	.4338	1.2610	.2280	.4338	1.2610	.2280	.4338	1.0000	0.0000	0.0000	0.00
12.06	1.4286	.2998	.5420	1.4286	.2998	.5420	1.4286	.2998	.5420	1.0000	0.0000	0.0000	0.00
14.06	1.6013	.3856	.6535	1.6013	.3856	.6535	1.6013	.3856	.6535	1.0000	0.0000	0.0000	0.00
16.00	1.7068	.4653	.7370	1.7068	.4653	.7370	1.7063	.4653	.7370	1.0000	0.0000	0.0000	0.00
18.00	1.8043	.5511	.8348	1.8043	.5511	.8348	1.8043	.5511	.8348	1.0000	0.0000	0.0000	0.00
20.03	1.9167	.6513	.9463	1.9167	.6513	.9463	1.9167	.6513	.9463	1.0000	0.0000	0.0000	0.00
22.03	1.9920	.7497	1.0382	1.9920	.7497	1.0382	1.9920	.7497	1.0382	1.0000	0.0000	0.0000	0.00
24.04	2.1003	.8735	1.1459	2.1003	.8735	1.1459	2.1003	.8735	1.1459	1.0000	0.0000	0.0000	0.00

TABLE 5.- CONTINUED.

VEO-WING 1/10-SCALE RESEARCH MODEL, VSTOL TEST NO. 204

ALPHA	CL	CD	CPM	CLE2	CDE2	CME2	CLCT	CDCT	CMCT	NPR	CT	CTRF	THETAJ
RUN = 435													
-3.79	.1556	-.0120	-.2251	.1544	.0543	-.2154	.1556	-.0115	-.2250	1.0000	.1003	.0663	4.79
-1.93	.2951	-.0115	-.1487	.2918	.0537	-.1392	.2951	-.0119	-.1488	1.0000	.0994	.0653	4.84
-.03	.4162	-.0041	-.0830	.4107	.0604	-.0735	.4162	-.0050	-.0831	1.0000	.0986	.0648	4.86
2.02	.6088	.0098	.0303	.6010	.0736	.0396	.6089	.0084	.0301	1.0000	.0979	.0643	4.89
4.01	.7899	.0352	.1311	.7800	.0981	.1404	.7902	.0333	.1309	1.0000	.0971	.0637	4.92
6.01	.9628	.0713	.2281	.9508	.1335	.2373	.9632	.0691	.2277	1.0000	.0966	.0633	4.93
7.99	1.1241	.1173	.3152	1.1100	.1788	.3243	1.1247	.1149	.3148	1.0000	.0962	.0631	4.95
10.05	1.3219	.1783	.4293	1.3056	.2390	.4385	1.3226	.1757	.4289	1.0000	.0959	.0628	4.96
12.09	1.4889	.2574	.5365	1.4705	.3172	.5456	1.4897	.2546	.5361	1.0000	.0956	.0626	4.97
14.00	1.6293	.3333	.6261	1.6092	.3919	.6351	1.6305	.3300	.6256	1.0000	.0946	.0619	5.00
16.01	1.7890	.4225	.7305	1.7655	.4845	.7402	1.7889	.4229	.7306	1.0000	.1007	.0662	4.78
18.01	1.9017	.5159	.8160	1.8756	.5780	.8259	1.9011	.5173	.8162	1.0000	.1024	.0674	4.75
20.03	2.0353	.6213	.9386	2.0069	.6829	.9486	2.0345	.6231	.9389	1.0000	.1030	.0678	4.73
22.13	2.1565	.7358	1.0489	2.1258	.7965	1.0589	2.1555	.7378	1.0492	1.0000	.1033	.0681	4.72
24.05	2.2793	.8665	1.1523	2.2464	.9265	1.1628	2.2781	.8687	1.1531	1.0000	.1038	.0684	4.71
RUN = 436													
-3.78	.1612	-.0781	-.2407	.1619	.0601	-.2216	.1612	-.0752	-.2403	1.0000	.2042	.1382	3.51
-2.05	.3082	-.0800	-.1583	.3047	.0590	-.1390	.3081	-.0763	-.1578	1.0000	.2055	.1391	3.50
-.01	.4552	-.0722	-.0761	.4467	.0672	-.0567	.4549	-.0680	-.0755	1.0000	.2062	.1395	3.50
2.02	.6370	-.0579	.0323	.6236	.0808	.0516	.6366	-.0539	.0329	1.0000	.2059	.1394	3.50
4.01	.8190	-.0304	.1253	.8008	.1076	.1445	.8185	-.0266	.1258	1.0000	.2056	.1392	3.50
5.99	1.0075	.0071	.2385	.9847	.1436	.2576	1.0070	.0101	.2389	1.0000	.2044	.1384	3.50
7.98	1.1747	.0549	.3280	1.1471	.1911	.3472	1.1740	.0584	.3284	1.0000	.2053	.1389	3.50
10.01	1.3474	.1158	.4272	1.3148	.2514	.4465	1.3464	.1198	.4278	1.0000	.2061	.1395	3.50
12.00	1.5482	.1929	.5400	1.5109	.3274	.5593	1.5471	.1969	.5406	1.0000	.2062	.1395	3.50
14.00	1.7010	.2850	.6370	1.6622	.4077	.6551	1.7029	.2788	.6361	1.0000	.1903	.1287	3.55
16.00	1.8533	.3726	.7191	1.8075	.5018	.7381	1.8527	.3743	.7193	1.0000	.2026	.1371	3.51
18.07	2.0339	.4845	.8352	1.9833	.6126	.8543	2.0331	.4867	.8355	1.0000	.2035	.1377	3.51
20.08	2.1330	.5863	.9313	2.0777	.7129	.9505	2.1319	.5889	.9317	1.0000	.2042	.1382	3.51
22.06	2.2525	.6993	1.0292	2.1929	.8239	1.0483	2.2513	.7018	1.0296	1.0000	.2041	.1382	3.51
24.03	2.3631	.8258	1.1216	2.2990	.9486	1.1408	2.3616	.8285	1.1220	1.0000	.2046	.1385	3.50

TABLE 5.- CONTINUED.

VEO-WING 1/10-SCALE RESEARCH MODEL, VSTOL TEST NO. 204

ALPHA	CL	CD	CPM	CLE2	CDE2	CME2	CLCT	CDCT	CMCT	NPR	CT	CTRF	THETAJ
RUN = 437													
-3.75	.2047	-.2671	-.2774	.2085	.0671	-.2334	.2047	-.2652	-.2772	1.0000	.5029	.3342	3.09
-2.06	.3280	-.2643	-.2174	.3221	.0703	-.1733	.3280	-.2620	-.2171	1.0000	.5035	.3347	3.08
-.04	.5444	-.2515	-.0925	.5268	.0789	-.0490	.5445	-.2531	-.0927	1.0000	.4976	.3310	3.09
1.97	.7133	-.2345	.0065	.6840	.0961	.0502	.7133	-.2351	.0064	1.0000	.4992	.3319	3.09
4.03	.8928	-.2046	.1057	.8517	.1251	.1494	.8929	-.2049	.1056	1.0000	.4996	.3322	3.09
6.02	1.0824	-.1667	.2128	1.0297	.1616	.2566	1.0823	-.1667	.2128	1.0000	.5001	.3325	3.09
8.07	1.2953	-.1123	.3166	1.2309	.2142	.3604	1.2952	-.1119	.3166	1.0000	.5006	.3328	3.09
10.01	1.4618	-.0514	.3989	1.3864	.2727	.4427	1.4617	-.0511	.3990	1.0000	.5005	.3328	3.09
12.04	1.6598	.0296	.5074	1.5730	.3506	.5512	1.6597	.0297	.5074	1.0000	.5001	.3325	3.09
14.06	1.8437	.1176	.6061	1.7452	.4366	.6501	1.8432	.1189	.6063	1.0000	.5021	.3339	3.09
16.02	2.0023	.2122	.7034	1.8932	.5272	.7472	2.0020	.2130	.7035	1.0000	.5013	.3333	3.09
18.03	2.1451	.3175	.7945	2.0250	.6286	.8384	2.1448	.3185	.7947	1.0000	.5016	.3335	3.09
20.10	2.2932	.4359	.9030	2.1619	.7424	.9519	2.2928	.4368	.9082	1.0000	.5014	.3334	3.09
22.09	2.4018	.5499	.9945	2.2599	.8517	1.0384	2.4013	.5508	.9946	1.0000	.5015	.3335	3.09
24.07	2.5450	.6900	1.0958	2.3931	.9863	1.1396	2.5448	.6904	1.0958	1.0000	.5008	.3330	3.09
RUN = 438													
-3.81	.1417	.0411	-.2599	.1417	.0411	-.2599	.1417	.0411	-.2599	1.0000	0.0000	0.0000	0.00
-.04	.4526	.0474	-.0710	.4526	.0474	-.0710	.4526	.0474	-.0710	1.0000	0.0000	0.0000	0.00
1.99	.6043	.0621	.0186	.6043	.0621	.0186	.6043	.0621	.0186	1.0000	0.0000	0.0000	0.00
4.00	.7710	.0850	.1273	.7710	.0850	.1273	.7710	.0850	.1273	1.0000	0.0000	0.0000	0.00
6.02	.9649	.1196	.2527	.9649	.1196	.2527	.9649	.1196	.2527	1.0000	0.0000	0.0000	0.00
7.99	1.1150	.1649	.3376	1.1150	.1649	.3376	1.1150	.1649	.3376	1.0000	0.0000	0.0000	0.00
10.10	1.2957	.2271	.4487	1.2957	.2271	.4487	1.2957	.2271	.4487	1.0000	0.0000	0.0000	0.00
11.99	1.4440	.2986	.5426	1.4440	.2986	.5426	1.4440	.2986	.5426	1.0000	0.0000	0.0000	0.00
14.03	1.5887	.3778	.6452	1.5887	.3778	.6452	1.5887	.3778	.6452	1.0000	0.0000	0.0000	0.00
16.06	1.7245	.4702	.7399	1.7245	.4702	.7399	1.7245	.4702	.7399	1.0000	0.0000	0.0000	0.00
18.05	1.8194	.5577	.8332	1.8194	.5577	.8332	1.8194	.5577	.8332	1.0000	0.0000	0.0000	0.00
20.01	1.9393	.6543	.9567	1.9393	.6543	.9567	1.9393	.6543	.9567	1.0000	0.0000	0.0000	0.00
22.01	2.0215	.7534	1.0537	2.0215	.7534	1.0537	2.0215	.7534	1.0537	1.0000	0.0000	0.0000	0.00
24.05	2.1311	.8793	1.1548	2.1311	.8793	1.1548	2.1311	.8793	1.1548	1.0000	0.0000	0.0000	0.00

TABLE 5.- CONTINUED.

VEO-WING 1/10-SCALE RESEARCH MODEL, VSTOL TEST NO. 204

ALPHA	CL	CD	CPM	CLE2	CDE2	CME2	CLCT	CDCT	CMCT	NPR	CT	CTRF	THETAJ
RUN = 441													
-3.77	.3462	-.3713	-.3479	.2673	.0683	-.2534	.3507	-.3962	-.3532	1.4346	.4731	.4451	13.99
-2.02	.4889	-.3564	-.2644	.3986	.0687	-.1722	.4771	-.3009	-.2524	1.4173	.4600	.4346	14.01
-.02	.7123	-.3607	-.1621	.6025	.0808	-.0656	.7158	-.3750	-.1653	1.4412	.4843	.4550	13.98
2.03	.8398	-.3326	-.0705	.7653	.1011	.0253	.8950	-.3508	-.0745	1.4368	.4798	.4512	13.98
4.04	1.0782	-.2948	.0274	.9390	.1332	.1229	1.0844	-.3139	.0231	1.4373	.4786	.4500	13.98
6.06	1.2643	-.2491	.1365	1.1107	.1718	.2316	1.2719	-.2700	.1318	1.4354	.4763	.4481	13.98
7.98	1.4541	-.1900	.2322	1.2874	.2232	.3268	1.4633	-.2131	.2269	1.4341	.4736	.4456	13.99
9.98	1.6243	-.1142	.3234	1.4433	.2931	.4180	1.6344	-.1370	.3181	1.4324	.4735	.4457	13.99
12.02	1.8086	-.0284	.4324	1.6138	.3710	.5267	1.8203	-.0522	.4268	1.4304	.4718	.4443	13.99
14.00	1.9914	.0693	.5360	1.7835	.4605	.6300	2.0046	.0445	.5301	1.4290	.4703	.4430	13.99
15.99	2.1764	.1831	.6314	1.9560	.5650	.7250	2.1445	.2384	.6450	1.4259	.4677	.4409	14.00
18.08	2.3691	.3056	.7277	2.1300	.6873	.8233	2.3797	.2887	.7235	1.4352	.4787	.4503	13.98
20.06	2.5481	.4354	.8392	2.2940	.8117	.9355	2.5569	.4224	.8358	1.4406	.4833	.4540	13.98
22.07	2.7158	.5768	.9516	2.4485	.9441	1.0480	2.7248	.5644	.9483	1.4421	.4837	.4542	13.98
24.02	2.8253	.7144	1.0361	2.5457	1.0724	1.1325	2.8347	.7023	1.0329	1.4420	.4837	.4543	13.98
RUN = 442													
-3.71	.5307	-.6957	-.4395	.3479	.0905	-.2648	.5298	-.6919	-.4387	1.8601	.9044	.8072	16.80
-1.97	.7364	-.6958	-.3410	.5255	.0942	-.1638	.7325	-.6813	-.3378	1.8732	.9168	.8177	16.91
-.03	.9036	-.6729	-.2621	.6666	.1088	-.0851	.8995	-.6595	-.2590	1.8707	.9158	.8168	16.89
2.02	1.1208	-.6446	-.1527	.8552	.1309	.0249	1.1153	-.6285	-.1491	1.8715	.9190	.8197	16.90
3.98	1.3160	-.6062	-.0558	1.0232	.1511	.1222	1.3094	-.5889	-.0518	1.8722	.9207	.8212	16.90
5.98	1.5053	-.5541	.0459	1.1864	.2018	.2237	1.4934	-.5379	.0497	1.8712	.9198	.8204	16.90
7.99	1.7462	-.4801	.1587	1.4023	.2618	.3359	1.7400	-.4666	.1620	1.8705	.9167	.8177	16.89
10.00	1.9556	-.3968	.2603	1.5860	.3317	.4373	1.9492	-.3841	.2633	1.8725	.9159	.8169	16.91
12.05	2.1602	-.2945	.3588	1.7653	.4193	.5356	2.1539	-.2831	.3616	1.8715	.9146	.8157	16.90
13.98	2.3698	-.1866	.4515	1.9517	.5130	.6281	2.3635	-.1761	.4541	1.8697	.9136	.8150	16.88
16.02	2.5910	-.0582	.5497	2.1474	.6270	.7266	2.5837	-.0468	.5526	1.8714	.9152	.8163	16.90
18.00	2.7970	.0808	.6446	2.3295	.7512	.8218	2.7887	.0927	.6473	1.8705	.9163	.8173	16.89
20.00	2.9825	.2303	.7413	2.4903	.8860	.9190	2.9722	.2440	.7450	1.8705	.9192	.8199	16.89
24.05	3.3258	.5674	.9470	2.7890	1.1862	1.1245	3.3151	.5797	.9505	1.8704	.9183	.8192	16.89

TABLE 5.- CONTINUED.

VFD-WING 1/10-SCALE RESEARCH MODEL, VSTOL TEST NO. 204

ALPHA	CL	CD	CPM	CLE2	CDE2	CME2	CLCT	CDCT	CMCT	NPR	CT	CTRF	THETAJ
RUN = 443													
-3.64	.9181	-1.6720	-.6579	.4548	.0729	-.2419	.9061	-1.6269	-.6471	3.0641	2.0531	1.8054	18.51
-1.99	1.0873	-1.6471	-.5846	.5745	.0821	-.1691	1.0745	-1.6038	-.5742	3.0561	2.0514	1.8037	18.51
-.02	1.3051	-1.6095	-.4988	.7339	.0990	-.0839	1.2915	-1.5687	-.4889	3.0534	2.0490	1.8015	18.51
1.99	1.5692	-1.5686	-.3801	.9376	.1215	.0355	1.5532	-1.5257	-.3696	3.0566	2.0520	1.8042	18.51
3.98	1.7559	-1.5097	-.2916	1.0661	.1573	.1240	1.7385	-1.4675	-.2811	3.0558	2.0518	1.8041	18.51
6.00	2.0018	-1.4344	-.1897	1.2557	.2022	.2247	1.9852	-1.3979	-.1804	3.0563	2.0457	1.7986	18.51
7.98	2.2647	-1.3480	-.0929	1.4612	.2643	.3221	2.2455	-1.3096	-.0830	3.0554	2.0489	1.8014	18.51
10.01	2.5407	-1.2404	.0047	1.6804	.3431	.4199	2.5199	-1.2021	.0148	3.0574	2.0495	1.8021	18.51
12.05	2.7999	-1.1143	.1077	1.8854	.4349	.5221	2.7793	-1.0794	.1170	3.0539	2.0461	1.7990	18.51
14.00	3.0553	-.9814	.2130	2.0901	.5336	.6267	3.0349	-.9494	.2217	3.0506	2.0432	1.7964	18.51
16.00	3.2950	-.8310	.3118	2.2762	.6509	.7260	3.2724	-.7981	.3210	3.0532	2.0454	1.7984	18.51
18.06	3.5488	-.6608	.4277	2.4756	.7860	.8427	3.5233	-.6263	.4376	3.0555	2.0438	1.8014	18.51
20.10	3.7771	-.4763	.5078	2.6515	.9333	.9233	3.7438	-.4407	.5183	3.0529	2.0517	1.8039	18.51
22.09	4.0085	-.2831	.6173	2.8342	1.0871	1.0329	3.9785	-.2480	.6279	3.0516	2.0525	1.8046	18.51
24.02	4.1738	-.0953	.7117	2.9520	1.2370	1.1281	4.1405	-.0590	.7231	3.0546	2.0561	1.8078	18.51
RUN = 444													
-3.90	.1496	.0433	-.2663	.1496	.0433	-.2663	.1496	.0433	-.2663	1.0000	0.0000	0.0000	0.00
-1.96	.3188	.0418	-.1545	.3188	.0418	-.1545	.3188	.0418	-.1545	1.0004	0.0000	0.0000	0.00
.02	.4433	.0492	-.0815	.4433	.0492	-.0815	.4433	.0492	-.0815	1.0008	0.0000	0.0000	0.00
2.03	.6152	.0633	.0257	.6152	.0633	.0257	.6152	.0633	.0257	1.0005	0.0000	0.0000	0.00
4.00	.7776	.0866	.1290	.7776	.0866	.1290	.7776	.0866	.1290	1.0001	0.0000	0.0000	0.00
6.02	.9468	.1165	.2385	.9468	.1165	.2385	.9468	.1165	.2385	1.0000	0.0000	0.0000	0.00
7.00	1.0280	.1369	.2833	1.0280	.1369	.2833	1.0280	.1369	.2833	1.0000	0.0000	0.0000	0.00
10.05	1.2827	.2206	.4342	1.2827	.2206	.4342	1.2827	.2206	.4342	1.0000	0.0000	0.0000	0.00
12.01	1.4538	.2899	.5452	1.4538	.2899	.5452	1.4538	.2899	.5452	1.0000	0.0000	0.0000	0.00
14.03	1.6092	.3730	.6543	1.6092	.3730	.6543	1.6092	.3730	.6543	1.0000	0.0000	0.0000	0.00
16.04	1.7244	.4594	.7440	1.7244	.4594	.7440	1.7244	.4594	.7440	1.0000	0.0000	0.0000	0.00
18.07	1.8157	.5449	.8369	1.8157	.5449	.8369	1.8157	.5449	.8369	1.0005	0.0000	0.0000	0.00
20.02	1.9238	.6418	.9420	1.9238	.6418	.9420	1.9238	.6418	.9420	1.0008	0.0000	0.0000	0.00
22.05	2.0153	.7463	1.0442	2.0153	.7463	1.0442	2.0153	.7463	1.0442	1.0006	0.0000	0.0000	0.00
24.06	2.1131	.8668	1.1398	2.1131	.8668	1.1398	2.1131	.8668	1.1398	1.0000	0.0000	0.0000	0.00
8.00	1.0981	.1670	.3165	1.0981	.1670	.3165	1.0981	.1670	.3165	1.0000	0.0000	0.0000	0.00

TABLE 5.- CONTINUED.

VEO-WING 1/10-SCALE RESEARCH MODEL, VSTOL TEST NO. 204

ALPHA	CL	CD	CPM	CLE2	CDE2	CME2	CLCT	CDCT	CMCT	NPR	CT	CTRF	THETAJ
RUN = 446													
-3.75	.3693	-.4356	-.3693	.2678	.0658	-.2559	.3535	-.4070	-.3629	1.4740	.5302	.5115	15.19
-2.00	.5164	-.4261	-.2975	.4001	.0697	-.1846	.5103	-.4000	-.2916	1.4716	.5279	.5093	15.20
.00	.6845	-.4115	-.2060	.5508	.0807	-.0929	.6773	-.3849	-.1998	1.4713	.5286	.5100	15.21
2.02	.8397	-.3904	-.0989	.7385	.0969	.0142	.8314	-.3638	-.0927	1.4705	.5288	.5102	15.21
4.07	1.0789	-.3542	-.0000	.9110	.1258	.1128	1.0704	-.3296	.0058	1.4680	.5270	.5085	15.22
6.00	1.2644	-.3155	.1015	1.0799	.1601	.2146	1.2544	-.2896	.1077	1.4705	.5288	.5102	15.21
7.98	1.4454	-.2585	.1901	1.2449	.2095	.3030	1.4349	-.2340	.1960	1.4692	.5276	.5091	15.22
9.99	1.6315	-.1916	.2964	1.4146	.2694	.4094	1.6199	-.1671	.3024	1.4698	.5280	.5095	15.21
12.01	1.8276	-.0990	.4129	1.5949	.3533	.5257	1.8156	-.0757	.4187	1.4690	.5272	.5088	15.22
14.01	2.0066	-.0053	.5228	1.7584	.4383	.6355	1.9939	.0173	.5286	1.4695	.5268	.5083	15.21
8.04	1.4465	-.2553	.1970	1.2459	.2116	.3097	1.4363	-.2316	.2027	1.4704	.5267	.5082	15.21
16.03	2.1642	.1002	.6213	1.9005	.5349	.7341	2.1507	.1224	.6271	1.4686	.5270	.5085	15.22
17.98	2.3297	.2173	.7067	2.0519	.6417	.8192	2.3161	.2380	.7122	1.4678	.5257	.5072	15.22
20.05	2.5212	.3584	.8200	2.2278	.7732	.9327	2.5064	.3794	.8257	1.4687	.5266	.5081	15.22
22.02	2.6794	.4963	.9202	2.3713	.9016	1.0331	2.6632	.5175	.9261	1.4691	.5276	.5091	15.22
24.01	2.8081	.6437	1.0207	2.4877	1.0362	1.1331	2.7927	.6625	1.0261	1.4690	.5251	.5067	15.22
RUN = 447													
-3.71	.5371	-.7954	-.4853	.3003	.0368	-.2674	.5229	-.7423	-.4722	1.9252	.9576	.9135	18.73
-1.95	.7348	-.7948	-.3922	.4669	.0877	-.1718	.7162	-.7336	-.3769	1.9325	.9671	.9223	18.84
-.02	.9112	-.7735	-.3188	.6137	.0997	-.0983	.8905	-.7128	-.3035	1.9322	.9673	.9225	18.83
1.96	1.1233	-.7457	-.2076	.7950	.1178	.0133	1.1000	-.6845	-.1919	1.9335	.9686	.9238	18.85
4.07	1.3333	-.7009	-.1016	.9744	.1482	.1187	1.3086	-.6424	-.0865	1.9331	.9666	.9218	18.84
6.05	1.5613	-.6495	.0119	1.1726	.1887	.2327	1.5337	-.5900	.0275	1.9319	.9688	.9239	18.83
8.00	1.7397	-.5809	.0962	1.3243	.2405	.3161	1.7117	-.5255	.1110	1.9316	.9651	.9204	18.82
9.96	1.9379	-.5032	.1962	1.4934	.3053	.4167	1.9069	-.4469	.2115	1.9331	.9674	.9226	18.84
12.04	2.1546	-.3989	.3134	1.6815	.3923	.5338	2.1220	-.3444	.3286	1.9325	.9666	.9219	18.84
14.08	2.3559	-.2830	.4208	1.8556	.4906	.6410	2.3218	-.2301	.4359	1.9312	.9659	.9213	18.81
16.08	2.5627	-.1564	.5211	2.0348	.5996	.7415	2.5262	-.1041	.5363	1.9331	.9669	.9221	18.84
18.02	2.7932	-.0136	.6105	2.2338	.7258	.8314	2.7537	.0391	.6262	1.9329	.9691	.9242	18.84
20.06	2.9782	.1385	.7105	2.3985	.8569	.9312	2.9375	.1889	.7260	1.9326	.9680	.9232	18.84
22.07	3.1621	.3025	.8068	2.5572	1.0003	1.0277	3.1194	.3517	.8224	1.9338	.9684	.9235	18.85
24.08	3.3267	.4762	.9155	2.6985	1.1518	1.1361	3.2830	.5232	.9309	1.9327	.9673	.9225	18.84

TABLE 5.- CONTINUED.

VED-WING 1/10-SCALE RESEARCH MODEL, VSTOL TEST NO. 204

ALPHA	CL	CD	CPM	CLE2	CDE2	CME2	CLCT	CDCT	CMCT	NPR	CT	CTRF	THETAJ
RUN = 448													
-1.99	1.0324	-1.9756	-.7022	.4527	.0856	-.1785	1.0636	-1.9141	-.6866	3.3228	2.2677	2.1553	18.98
.03	1.3256	-1.9388	-.5997	.6242	.0966	-.0768	1.3053	-1.8800	-.5846	3.3160	2.2655	2.1529	18.99
2.03	1.5697	-1.8985	-.5003	.7949	.1185	.0247	1.5787	-1.9220	-.5064	3.3203	2.2736	2.1608	18.98
4.01	1.8049	-1.8410	-.3972	.9616	.1470	.1275	1.8153	-1.8653	-.4036	3.3214	2.2722	2.1595	18.98
6.02	2.0622	-1.7715	-.2906	1.1487	.1870	.2344	2.0727	-1.7940	-.2967	3.3210	2.2738	2.1610	18.98
8.06	2.3213	-1.6740	-.1902	1.3417	.2453	.3334	2.2922	-1.6170	-.1746	3.3205	2.2673	2.1548	18.98
10.06	2.5369	-1.5694	-.0890	1.5400	.3160	.4349	2.5550	-1.5120	-.0731	3.3209	2.2691	2.1565	18.98
12.04	2.8533	-1.4400	.0140	1.7452	.4022	.5362	2.8228	-1.3893	.0284	3.3162	2.2623	2.1498	18.99
14.04	3.1198	-1.3052	.1089	1.9453	.5023	.6327	3.0846	-1.2510	.1246	3.3225	2.2680	2.1556	18.98
16.02	3.3547	-1.1556	.2122	2.1172	.6115	.7364	3.3166	-1.1012	.2283	3.3220	2.2698	2.1572	18.98
18.02	3.5988	-.9824	.3020	2.3019	.7336	.8256	3.5603	-.9313	.3175	3.3228	2.2673	2.1549	18.98
20.04	3.8682	-.7881	.4036	2.5095	.8881	.9278	3.8859	-.8100	.3968	3.3193	2.2704	2.1577	18.98
22.09	4.0971	-.5914	.5120	2.6783	1.0369	1.0367	4.1144	-.6112	.5056	3.3226	2.2723	2.1597	18.98
24.06	4.2725	-.3866	.6026	2.8020	1.1879	1.1260	4.2291	-.3401	.6180	3.3186	2.2669	2.1543	18.98
RUN = 449													
-3.82	.1407	.0488	-.2408	.1407	.0488	-.2408	.1407	.0488	-.2408	1.0000	0.0000	0.0000	0.00
-2.03	.2947	.0462	-.1440	.2947	.0462	-.1440	.2947	.0462	-.1440	1.0000	0.0000	0.0000	0.00
-.04	.4340	.0522	-.0551	.4340	.0522	-.0551	.4340	.0522	-.0551	1.0000	0.0000	0.0000	0.00
1.99	.5881	.0665	.0337	.5881	.0665	.0337	.5881	.0665	.0337	1.0000	0.0000	0.0000	0.00
4.00	.7516	.0919	.1352	.7516	.0919	.1352	.7516	.0919	.1352	1.0000	0.0000	0.0000	0.00
6.00	.9242	.1253	.2393	.9242	.1253	.2393	.9242	.1253	.2393	1.0000	0.0000	0.0000	0.00
8.03	1.0938	.1714	.3407	1.0938	.1714	.3407	1.0938	.1714	.3407	1.0000	0.0000	0.0000	0.00
10.06	1.2785	.2341	.4408	1.2785	.2341	.4408	1.2785	.2341	.4408	1.0000	0.0000	0.0000	0.00
12.08	1.4316	.3088	.5423	1.4316	.3088	.5423	1.4316	.3088	.5423	1.0000	0.0000	0.0000	0.00
14.02	1.5740	.3846	.6405	1.5740	.3846	.6405	1.5740	.3846	.6405	1.0000	0.0000	0.0000	0.00
16.04	1.7037	.4722	.7400	1.7037	.4722	.7400	1.7037	.4722	.7400	1.0000	0.0000	0.0000	0.00
18.07	1.7974	.5581	.8273	1.7974	.5581	.8273	1.7974	.5581	.8273	1.0000	0.0000	0.0000	0.00
20.01	1.8991	.6517	.9291	1.8991	.6517	.9291	1.8991	.6517	.9291	1.0000	0.0000	0.0000	0.00
24.04	2.1048	.8820	1.1466	2.1048	.8820	1.1466	2.1048	.8820	1.1466	1.0000	0.0000	0.0000	0.00

TABLE 5.- CONTINUED.

VED-WING 1/10-SCALE RESEARCH MODEL, VSTOL TEST NO. 204

ALPHA	CL	CD	CPM	CLE2	CDE2	CME2	CLCT	CDCT	CMCT	NPR	CT	CTRF	THETAJ
RUN = 451													
-3.79	.1173	-.0083	-.2568	.1177	.0559	-.2476	.1173	-.0088	-.2569	1.0000	.0991	.0642	3.48
-2.03	.2853	-.0099	-.1589	.2838	.0532	-.1498	.2854	-.0116	-.1591	1.0000	.0975	.0632	3.47
-.02	.4328	-.0037	-.0795	.4288	.0624	-.0700	.4327	-.0021	-.0793	1.0000	.1025	.0663	3.50
-.00	.4559	-.0053	-.0656	.4518	.0614	-.0560	.4557	-.0031	-.0653	1.0000	.1034	.0669	3.51
1.99	.6015	.0098	.0180	.5950	.0773	.0277	.6012	.0130	.0184	1.0000	.1049	.0678	3.52
4.02	.7851	.0339	.1218	.7762	.1012	.1316	.7846	.0372	.1223	1.0000	.1051	.0679	3.52
6.02	.9747	.0691	.2272	.9634	.1362	.2370	.9741	.0725	.2277	1.0000	.1053	.0680	3.53
8.06	1.1353	.1177	.3184	1.1216	.1845	.3282	1.1346	.1212	.3189	1.0000	.1055	.0682	3.53
9.99	1.2903	.1748	.4079	1.2743	.2413	.4177	1.2894	.1785	.4084	1.0000	.1060	.0685	3.53
12.05	1.4830	.2527	.5239	1.4652	.3167	.5334	1.4825	.2544	.5241	1.0000	.1028	.0665	3.51
14.07	1.6329	.3332	.6210	1.6131	.3960	.6304	1.6326	.3343	.6211	1.0000	.1017	.0658	3.50
16.00	1.7853	.4236	.7268	1.7636	.4849	.7361	1.7852	.4239	.7268	1.0000	.1004	.0650	3.49
20.03	2.0315	.6236	.9345	2.0065	.6811	.9435	2.0323	.6216	.9342	1.0000	.0966	.0626	3.46
20.04	2.0374	.6202	.9334	2.0112	.6802	.9478	2.0371	.6209	.9385	1.0000	.1012	.0655	3.50
22.01	2.1484	.7323	1.0351	2.1206	.7907	1.0444	2.1485	.7322	1.0351	1.0000	.0997	.0646	3.48
24.04	2.2820	.8685	1.1422	2.2527	.9248	1.1513	2.2826	.8673	1.1420	1.0000	.0979	.0633	3.47
RUN = 452													
-3.80	.1531	-.0644	-.2475	.1533	.0626	-.2292	.1531	-.0655	-.2477	1.0000	.1983	.1270	3.69
-2.04	.2757	-.0641	-.1797	.2721	.0621	-.1615	.2758	-.0659	-.1800	1.0000	.1971	.1263	3.70
-.02	.4677	-.0636	-.0734	.4593	.0692	-.0543	.4674	-.0587	-.0727	1.0000	.2077	.1331	3.64
2.01	.6517	-.0478	.0373	.6386	.0849	.0565	.6512	-.0427	.0380	1.0000	.2080	.1333	3.64
3.98	.7895	-.0185	.1137	.7721	.1110	.1325	.7891	-.0160	.1141	1.0000	.2040	.1307	3.67
6.02	1.0222	.0217	.2535	1.0003	.1498	.2723	1.0218	.0235	.2538	1.0000	.2029	.1300	3.67
7.99	1.1734	.0686	.3378	1.1473	.1951	.3565	1.1732	.0696	.3380	1.0000	.2017	.1292	3.68
10.00	1.3327	.1305	.4176	1.3022	.2556	.4362	1.3326	.1311	.4177	1.0000	.2010	.1288	3.68
12.00	1.5212	.2065	.5237	1.4867	.3293	.5421	1.5214	.2060	.5236	1.0000	.1992	.1276	3.69
14.02	1.6931	.2931	.6227	1.6544	.4141	.6410	1.6934	.2921	.6226	1.0000	.1984	.1271	3.70
15.97	1.8556	.3866	.7199	1.8130	.5056	.7381	1.8562	.3849	.7196	1.0000	.1972	.1263	3.70
18.02	1.9888	.4836	.8069	1.9401	.6062	.8259	1.9874	.4871	.8074	1.0000	.2059	.1319	3.65
20.01	2.1171	.5875	.9177	2.0636	.7096	.9369	2.1150	.5922	.9184	1.0000	.2081	.1334	3.64
22.05	2.2284	.6998	1.0128	2.1703	.8207	1.0321	2.2259	.7052	1.0137	1.0000	.2093	.1341	3.63
24.02	2.3730	.8390	1.1159	2.3107	.9579	1.1352	2.3701	.8444	1.1168	1.0000	.2095	.1343	3.63

TABLE 5.- CONTINUED.

VED-WING 1/10-SCALE RESEARCH MODEL,VSTOL TEST NO. 204

ALPHA	CL	CD	CPM	CLE2	CDE2	CME2	CLCT	CDCT	CMCT	NPR	CT	CTRF	THETAJ
RUN = 453													
-3.78	.2016	-.2535	-.2866	.2092	.0658	-.2428	.2016	-.2545	-.2868	1.0000	.4985	.3195	2.43
-1.99	.3678	-.2560	-.1955	.3654	.0659	-.1513	.3678	-.2545	-.1953	1.0000	.5023	.3219	2.43
.06	.5581	-.2467	-.0940	.5442	.0739	-.0499	.5581	-.2462	-.0939	1.0000	.5008	.3209	2.43
2.01	.7272	-.2302	.0064	.7023	.0904	.0506	.7271	-.2290	.0066	1.0000	.5019	.3215	2.43
4.04	.8808	-.2008	.0974	.8445	.1191	.1416	.8806	-.1992	.0976	1.0000	.5025	.3219	2.43
6.06	1.0738	-.1632	.2039	1.0263	.1549	.2480	1.0736	-.1619	.2041	1.0000	.5021	.3217	2.43
7.99	1.2450	-.1128	.2900	1.1868	.2039	.3343	1.2447	-.1111	.2903	1.0000	.5026	.3220	2.43
9.98	1.4748	-.0428	.4012	1.4055	.2721	.4455	1.4744	-.0407	.4015	1.0000	.5033	.3224	2.43
12.06	1.6512	.0321	.4955	1.5704	.3445	.5398	1.6506	.0344	.4958	1.0000	.5037	.3227	2.43
14.00	1.8336	.1179	.5928	1.7424	.4273	.6371	1.8330	.1201	.5931	1.0000	.5036	.3226	2.43
16.02	1.9967	.2176	.6975	1.8948	.5231	.7417	1.9962	.2192	.6977	1.0000	.5027	.3220	2.43
18.01	2.1365	.3194	.7979	2.0236	.6227	.8423	2.1354	.3226	.7983	1.0000	.5052	.3236	2.43
20.01	2.2569	.4279	.8893	2.1335	.7267	.9337	2.2558	.4307	.8897	1.0000	.5046	.3232	2.43
22.02	2.4015	.5501	.9948	2.2679	.8439	1.0391	2.4004	.5524	.9951	1.0000	.5039	.3228	2.43
24.03	2.5277	.6919	1.0821	2.3840	.9802	1.1263	2.5269	.6936	1.0823	1.0000	.5029	.3221	2.43
RUN = 454													
-3.80	.1430	.0372	-.2462	.1430	.0372	-.2462	.1430	.0372	-.2462	1.0009	0.0000	0.0000	0.00
-1.99	.2879	.0386	-.1634	.2879	.0386	-.1634	.2879	.0386	-.1634	1.0012	0.0000	0.0000	0.00
-.03	.4331	.0431	-.0793	.4331	.0431	-.0793	.4331	.0431	-.0793	1.0012	0.0000	0.0000	0.00
1.99	.5945	.0561	.0269	.5945	.0561	.0269	.5945	.0561	.0269	1.0011	0.0000	0.0000	0.00
4.01	.7586	.0808	.1264	.7586	.0808	.1264	.7586	.0808	.1264	1.0002	0.0000	0.0000	0.00
6.03	.9484	.1155	.2376	.9484	.1155	.2376	.9484	.1155	.2376	1.0000	0.0000	0.0000	0.00
8.03	1.1098	.1612	.3258	1.1098	.1612	.3258	1.1098	.1612	.3258	1.0000	0.0000	0.0000	0.00
10.01	1.2768	.2210	.4219	1.2768	.2210	.4219	1.2768	.2210	.4219	1.0000	0.0000	0.0000	0.00
11.97	1.4266	.2868	.5204	1.4266	.2868	.5204	1.4266	.2868	.5204	1.0000	0.0000	0.0000	0.00
14.01	1.5889	.3700	.6296	1.5889	.3700	.6296	1.5889	.3700	.6296	1.0004	0.0000	0.0000	0.00
16.01	1.7192	.4578	.7263	1.7192	.4578	.7263	1.7192	.4578	.7263	1.0016	0.0000	0.0000	0.00
17.99	1.8051	.5402	.8166	1.8051	.5402	.8166	1.8051	.5402	.8166	1.0025	0.0000	0.0000	0.00
20.02	1.9330	.6453	.9417	1.9330	.6453	.9417	1.9330	.6453	.9417	1.0021	0.0000	0.0000	0.00
22.07	2.0287	.7540	1.0500	2.0287	.7540	1.0500	2.0287	.7540	1.0500	1.0011	0.0000	0.0000	0.00
24.01	2.1369	.8754	1.1605	2.1369	.8754	1.1605	2.1369	.8754	1.1605	1.0000	0.0000	0.0000	0.00
18.07	1.8191	.5463	.8384	1.8191	.5463	.8384	1.8191	.5463	.8384	1.0026	0.0000	0.0000	0.00

TABLE 5.- CONTINUED.

VEO-WING 1/10-SCALE RESEARCH MODEL,VSTOL TEST NO. 204

ALPHA	CL	CD	CPM	CLE2	CDE2	CME2	CLCT	CDCT	CMCT	NPR	CT	CTRF	THETAJ
RUN = 457													
-3.76	.3251	-.4545	-.3932	.2253	.0385	-.2768	.3269	-.4632	-.3952	1.4382	.4913	.5030	15.21
-1.94	.5062	-.4489	-.3021	.3904	.0423	-.1854	.5079	-.4559	-.3038	1.4393	.4930	.5047	15.20
-.01	.7268	-.4377	-.1877	.5948	.0487	-.0711	.7289	-.4453	-.1895	1.4390	.4923	.5041	15.20
2.04	.8676	-.4124	-.1196	.7179	.0700	-.0028	.8696	-.4189	-.1212	1.4400	.4933	.5051	15.19
4.04	1.0538	-.3775	-.0225	.8873	.0997	.0943	1.0559	-.3837	-.0240	1.4403	.4937	.5054	15.19
6.05	1.2415	-.3302	.0802	1.0591	.1392	.1967	1.2445	-.3379	.0783	1.4404	.4918	.5035	15.19
8.04	1.4445	-.2685	.1828	1.2465	.1927	.2988	1.4484	-.2776	.1804	1.4398	.4903	.5019	15.19
10.03	1.6171	-.2039	.2804	1.4027	.2511	.3968	1.6209	-.2120	.2784	1.4398	.4913	.5030	15.19
12.03	1.8002	-.1107	.3893	1.5593	.3374	.5058	1.8038	-.1177	.3875	1.4405	.4923	.5040	15.19
14.02	1.9879	-.0147	.4987	1.7414	.4262	.6155	1.9912	-.0206	.4972	1.4408	.4934	.5052	15.18
16.06	2.1579	.0947	.6040	1.8949	.5282	.7212	2.1604	.0905	.6029	1.4412	.4953	.5070	15.18
18.09	2.2972	.2083	.6947	2.0194	.6314	.8117	2.3004	.2035	.6933	1.4396	.4943	.5061	15.20
20.07	2.4383	.3365	.8042	2.1481	.7457	.9204	2.4437	.3288	.8020	1.4389	.4908	.5025	15.20
22.04	2.5540	.4575	.9023	2.2484	.8596	1.0191	2.5581	.4520	.9007	1.4396	.4933	.5051	15.20
24.04	2.6854	.6023	1.0248	2.3659	.9936	1.1416	2.6896	.5971	1.0232	1.4408	.4934	.5052	15.18
RUN = 458													
-3.72	.4902	-.8071	-.5082	.2884	.0832	-.2920	.4911	-.8113	-.5092	1.8749	.8958	.9129	16.49
-2.03	.6994	-.7997	-.4051	.4720	.0837	-.1891	.7006	-.8044	-.4062	1.8739	.8952	.9123	16.47
-.03	.8734	-.7771	-.3218	.6158	.0977	-.1061	.8748	-.7821	-.3230	1.8719	.8949	.9119	16.43
2.01	1.0707	-.7454	-.2234	.7838	.1173	-.0136	1.0732	-.7530	-.2303	1.8695	.8921	.9092	16.39
3.99	1.2720	-.7037	-.1242	.9568	.1465	.0897	1.2756	-.7135	-.1267	1.8670	.8897	.9067	16.34
6.00	1.4756	-.6499	-.0232	1.1312	.1879	.1906	1.4799	-.6604	-.0258	1.8673	.8889	.9059	16.35
7.99	1.6609	-.5841	.0660	1.2891	.2390	.2789	1.6667	-.5969	.0627	1.8656	.8862	.9031	16.32
10.06	1.8945	-.4972	.1932	1.4946	.3102	.4055	1.9017	-.5118	.1893	1.8641	.8841	.9010	16.29
12.02	2.0504	-.4099	.2866	1.6238	.3822	.4986	2.0587	-.4253	.2825	1.8638	.8828	.8997	16.29
14.02	2.2615	-.2982	.4141	1.8096	.4765	.6252	2.2718	-.3157	.4094	1.8615	.8800	.8969	16.24
16.02	2.4225	-.1820	.5059	1.9429	.5786	.7173	2.4322	-.1973	.5016	1.8597	.8822	.8992	16.21
18.06	2.5791	-.0552	.5851	2.0738	.6874	.7962	2.5899	-.0710	.5806	1.8578	.8813	.8982	16.18
20.05	2.7815	.0953	.7236	2.2527	.8175	.9338	2.7946	.0774	.7184	1.8567	.8783	.8952	16.16
22.06	2.9301	.2348	.8270	2.3673	.9436	1.0407	2.9376	.2253	.8241	1.8694	.8881	.9050	16.39
24.05	3.0460	.3878	.9240	2.4597	1.0770	1.1374	3.0540	.3784	.9211	1.8664	.8878	.9048	16.33

TABLE 5.- CONTINUED.

VED-WING 1/10-SCALE RESEARCH MODEL, VSTOL TEST NO. 204

ALPHA	CL	CD	CPM	CLE2	CDE2	CME2	CLCT	CDCT	CMCT	NPR	CT	CTRF	THETAJ
RUN = 459													
-3.70	.6847	-1.3907	-.6788	.2412	.0553	-.2808	.6881	-1.4019	-.6819	2.5435	1.4885	1.5125	20.75
-2.05	.8522	-1.3689	-.6086	.3686	.0593	-.2119	.8575	-1.3844	-.6129	2.5373	1.4839	1.5079	20.76
.03	1.1183	-1.3445	-.4910	.5822	.0682	-.0935	1.1230	-1.3569	-.4945	2.5386	1.4870	1.5109	20.75
1.98	1.3171	-1.3094	-.3980	.7325	.0856	-.0001	1.3216	-1.3201	-.4011	2.5366	1.4886	1.5126	20.76
4.01	1.5160	-1.2596	-.3072	.8828	.1131	.0906	1.5212	-1.2709	-.3105	2.5391	1.4877	1.5117	20.75
6.02	1.7847	-1.1939	-.1790	1.1048	.1535	.2180	1.7915	-1.2073	-.1830	2.5359	1.4852	1.5092	20.76
7.99	1.9857	-1.1193	-.0910	1.2609	.2021	.3055	1.9939	-1.1343	-.0955	2.5375	1.4832	1.5071	20.76
10.01	2.2243	-1.0266	.0251	1.4534	.2684	.4216	2.2331	-1.0413	.0206	2.5378	1.4832	1.5071	20.75
12.03	2.4323	-.9088	.1390	1.6210	.3506	.5331	2.4465	-.9307	.1321	2.5334	1.4743	1.4981	20.76
14.06	2.6347	-.7980	.2390	1.7734	.4403	.6358	2.6437	-.8110	.2348	2.5356	1.4845	1.5084	20.76
16.05	2.8542	-.6553	.3488	1.9507	.5520	.7456	2.8639	-.6683	.3446	2.5350	1.4840	1.5079	20.76
17.94	3.0397	-.5218	.4370	2.0948	.6579	.8347	3.0476	-.5317	.4337	2.5382	1.4875	1.5115	20.75
20.07	3.2349	-.3528	.5482	2.2468	.7910	.9459	3.2432	-.3624	.5448	2.5372	1.4876	1.5116	20.76
22.02	3.3365	-.1894	.6492	2.3638	.9158	1.0454	3.3990	-.2029	.6444	2.5326	1.4819	1.5058	20.76
24.06	3.5337	-.0156	.7494	2.4704	1.0546	1.1464	3.5447	-.0266	.7453	2.5386	1.4847	1.5087	20.75
RUN = 460													
-3.67	.8200	-1.9034	-.7917	.2720	.0469	-.2777	.8233	-1.9151	-.7948	3.0939	1.9881	2.0258	19.36
-1.97	.9915	-1.8736	-.7253	.3895	.0502	-.2145	.9981	-1.8946	-.7309	3.0856	1.9784	2.0158	19.34
-.02	1.2348	-1.8421	-.6270	.5688	.0577	-.1171	1.2429	-1.8653	-.6333	3.0830	1.9759	2.0131	19.34
2.00	1.4611	-1.7953	-.5319	.7297	.0772	-.0228	1.4710	-1.8209	-.5388	3.0818	1.9731	2.0103	19.33
3.97	1.6728	-1.7427	-.4392	.8775	.1037	.0699	1.6836	-1.7677	-.4461	3.0801	1.9733	2.0105	19.33
6.11	1.9635	-1.6733	-.3010	1.0992	.1434	.2082	1.9745	-1.6966	-.3076	3.0780	1.9747	2.0118	19.33
8.07	2.2197	-1.5907	-.1910	1.2939	.1956	.3184	2.2316	-1.6135	-.1975	3.0788	1.9748	2.0119	19.33
10.01	2.4108	-1.4978	-.1105	1.4261	.2543	.3983	2.4244	-1.5220	-.1175	3.0791	1.9727	2.0099	19.33
11.99	2.6570	-1.3777	.0166	1.6157	.3340	.5237	2.6218	-1.3198	.0337	3.0776	1.9666	2.0036	19.32
14.13	2.8676	-1.2453	.1122	1.7629	.4270	.6193	2.8298	-1.1881	.1295	3.0751	1.9672	2.0042	19.32
16.17	3.0865	-1.0957	.2210	1.9231	.5355	.7281	3.0471	-1.0405	.2382	3.0772	1.9666	2.0036	19.32
18.05	3.2769	-.9635	.3024	2.0524	.6376	.8136	3.2904	-.9812	.2967	3.0917	1.9781	2.0156	19.36
20.07	3.4998	-.7905	.4192	2.2178	.7691	.9310	3.5119	-.6051	.4145	3.0872	1.9814	2.0189	19.35
22.10	3.6793	-.6171	.5356	2.3426	.8965	1.0475	3.6915	-.6310	.5309	3.0888	1.9819	2.0194	19.35
24.14	3.8256	-.4373	.6347	2.4357	1.0282	1.1466	3.8380	-.4503	.6301	3.0872	1.9823	2.0198	19.35

TABLE 5.- CONTINUED.

VEO-WING 1/10-SCALE RESEARCH MODEL,VSTOL TEST NO. 204

ALPHA	CL	CD	CPM	CLE2	CDE2	CME2	CLCT	CDCT	CMCT	NPR	CT	CTRF	THETAJ
RUN = 461													
8.03	1.1633	.1828	.3464	1.1633	.1828	.3464	1.1633	.1828	.3464	1.0000	0.0000	0.0000	0.00
8.02	1.1350	.1065	.3015	1.0900	.1957	.3246	1.1360	.1044	.3010	1.0367	.0978	.0999	18.75
8.03	1.2667	-.0065	.2542	1.1800	.1806	.3030	1.2663	-.0055	.2545	1.1391	.2010	.2062	16.83
8.05	1.4221	-.1828	.2062	1.2573	.1831	.3008	1.4256	-.1907	.2042	1.3346	.3916	.4014	16.19
8.07	1.5933	-.5169	.0933	1.2722	.2327	.2800	1.5935	-.5174	.0932	1.7729	.7995	.8155	15.12
8.08	1.8924	-.8287	-.0071	1.3055	.2287	.3088	1.8976	-.8381	-.0099	2.2054	1.1894	1.2094	20.95
8.03	1.9607	-1.0218	-.0708	1.2777	.2171	.3003	1.9645	-1.0287	-.0728	2.4328	1.3922	1.4147	20.84
8.03	2.0737	-1.1974	-.0988	1.3046	.2128	.3242	2.0832	-1.2148	-.1040	2.6524	1.5805	1.6063	20.58
8.03	2.1899	-1.5835	-.2098	1.2659	.2015	.2992	2.2027	-1.6081	-.2168	3.0817	1.9727	2.0099	19.33
8.01	2.7107	-2.6890	-.4848	1.2670	.2120	.3197	2.6315	-2.6304	-.4685	3.4962	3.1639	3.2404	18.45
8.00	3.4062	-4.1297	-.9077	1.2432	.2150	.2979	3.3883	-4.0939	-.8977	3.4939	4.7391	4.8534	18.47
RUN = 462													
-3.87	-.0016	.1200	-.4572	-.0016	.1200	-.4572	-.0016	.1200	-.4572	1.0021	0.0000	0.0000	0.00
-2.01	.1099	.1059	-.3863	.1099	.1059	-.3863	.1099	.1059	-.3863	1.0028	0.0000	0.0000	0.00
-.03	.2503	.0957	-.2982	.2503	.0957	-.2982	.2503	.0957	-.2982	1.0029	0.0000	0.0000	0.00
1.99	.4140	.0915	-.1957	.4140	.0915	-.1957	.4140	.0915	-.1957	1.0034	0.0000	0.0000	0.00
4.10	.5643	.1015	-.1163	.5643	.1015	-.1163	.5643	.1015	-.1163	1.0029	0.0000	0.0000	0.00
6.01	.7257	.1201	-.0263	.7257	.1201	-.0263	.7257	.1201	-.0263	1.0021	0.0000	0.0000	0.00
8.02	.9028	.1544	.0685	.9028	.1544	.0685	.9028	.1544	.0685	1.0017	0.0000	0.0000	0.00
10.02	1.0544	.2011	.1580	1.0544	.2011	.1580	1.0544	.2011	.1580	1.0005	0.0000	0.0000	0.00
12.07	1.1949	.2668	.2491	1.1949	.2668	.2491	1.1949	.2668	.2491	1.0000	0.0000	0.0000	0.00
14.08	1.3218	.3289	.3430	1.3218	.3289	.3430	1.3218	.3289	.3430	1.0000	0.0000	0.0000	0.00
16.15	1.4489	.4085	.4374	1.4489	.4085	.4374	1.4489	.4085	.4374	1.0000	0.0000	0.0000	0.00
18.09	1.5562	.4801	.5453	1.5562	.4801	.5453	1.5562	.4801	.5453	1.0000	0.0000	0.0000	0.00
20.10	1.6424	.5506	.6656	1.6424	.5506	.6656	1.6424	.5506	.6656	1.0000	0.0000	0.0000	0.00
22.03	1.7210	.6293	.7510	1.7210	.6293	.7510	1.7210	.6293	.7510	1.0000	0.0000	0.0000	0.00
24.07	1.8139	.7217	.8398	1.8139	.7217	.8398	1.8139	.7217	.8398	1.0000	0.0000	0.0000	0.00

TABLE 5.- CONTINUED.

VEO-WING 1/10-SCALE RESEARCH MODEL,VSTOL TEST NO. 204

ALPHA	CL	CD	CPM	CLE2	CDE2	CME2	CLCT	CDCT	CMCT	NPR	CT	CTRF	THETAJ
RUN = 464													
-3.84	.2014	-.3876	-.5985	.1013	.1143	-.4804	.2014	-.3877	-.5986	1.4477	.4999	.5117	15.12
-2.02	.3544	-.3909	-.5303	.2389	.1038	-.4129	.3552	-.3946	-.5312	1.4442	.4963	.5080	15.15
-.00	.5081	-.3909	-.4559	.3753	.0997	-.3384	.5090	-.3943	-.4567	1.4441	.4965	.5083	15.15
2.04	.7131	-.3824	-.3550	.5631	.1019	-.2378	.7145	-.3871	-.3561	1.4427	.4952	.5070	15.17
3.99	.9020	-.3643	-.2651	.7356	.1145	-.1479	.9036	-.3690	-.2663	1.4415	.4952	.5069	15.18
6.02	1.0782	-.3289	-.1697	.8959	.1411	-.0532	1.0810	-.3361	-.1715	1.4404	.4924	.5041	15.19
7.97	1.2356	-.2845	-.0830	1.0377	.1779	.0334	1.2391	-.2927	-.0850	1.4395	.4913	.5030	15.20
10.05	1.4175	-.2218	.0170	1.2038	.2309	.1328	1.4224	-.2321	.0144	1.4369	.4889	.5006	15.22
12.04	1.5410	-.1500	.0954	1.3126	.2930	.2108	1.5472	-.1620	.0923	1.4352	.4868	.4984	15.24
14.05	1.6689	-.0778	.1786	1.4237	.3597	.2947	1.6740	-.0869	.1762	1.4381	.4899	.5015	15.21
16.06	1.8487	.0164	.2749	1.5882	.4454	.3910	1.8539	.0078	.2726	1.4381	.4902	.5019	15.21
18.06	1.9895	.1082	.3794	1.7138	.5282	.4957	1.9947	.1002	.3772	1.4370	.4906	.5023	15.22
20.06	2.1190	.2032	.4955	1.8285	.6137	.6118	2.1242	.1958	.4934	1.4370	.4912	.5029	15.22
22.02	2.2117	.2982	.5909	1.9078	.6975	.7070	2.2178	.2901	.5885	1.4347	.4901	.5018	15.25
24.07	2.3400	.4295	.6976	2.0266	.8114	.8121	2.3514	.4156	.6934	1.4299	.4825	.4941	15.30
RUN = 465													
-3.81	.3467	-.7314	-.7204	.1479	.1570	-.5051	.3482	-.7381	-.7220	1.8716	.8933	.9104	16.43
-1.98	.5370	-.7309	-.6338	.3117	.1461	-.4199	.5399	-.7423	-.6365	1.8695	.8885	.9034	16.39
.03	.7206	-.7252	-.5472	.4657	.1412	-.3340	.7246	-.7387	-.5505	1.8682	.8862	.9031	16.36
2.06	.9129	-.7130	-.4611	.6260	.1472	-.2469	.9162	-.7229	-.4636	1.8693	.8898	.9063	16.39
3.98	1.0948	-.6878	-.3753	.7797	.1624	-.1612	1.0984	-.6976	-.3777	1.8677	.8897	.9063	16.36
6.00	1.2717	-.6454	-.2870	.9289	.1898	-.0741	1.2772	-.6587	-.2904	1.8658	.8858	.9028	16.32
8.00	1.4727	-.5912	-.1855	1.1007	.2292	.0273	1.4795	-.6062	-.1894	1.8697	.8838	.9007	16.39
10.05	1.6475	-.5295	-.0947	1.2450	.2811	.1189	1.6529	-.5405	-.0976	1.8674	.8880	.9050	16.35
11.98	1.7919	-.4571	-.0102	1.3625	.3395	.2033	1.7977	-.4679	-.0131	1.8674	.8880	.9050	16.35
14.01	1.9456	-.3703	.0800	1.4885	.4098	.2933	1.9521	-.3816	.0769	1.8675	.8872	.9042	16.35
16.01	2.1335	-.2684	.1751	1.6480	.4969	.3891	2.1393	-.2776	.1725	1.8686	.8893	.9063	16.37
18.13	2.2945	-.1595	.2702	1.7811	.5875	.4842	2.3006	-.1684	.2677	1.8682	.8894	.9064	16.36
20.08	2.4215	-.0559	.3844	1.8840	.6727	.5930	2.4285	-.0654	.3816	1.8669	.8885	.9055	16.34
22.06	2.5373	.0532	.4835	1.9751	.7628	.6971	2.5447	.0439	.4807	1.8665	.8883	.9053	16.33
24.02	2.6696	.1817	.5785	2.0843	.8707	.7917	2.6781	.1717	.5754	1.8659	.8871	.9040	16.32

TABLE 5.- CONTINUED.

VEO-WING 1/10-SCALE RESEARCH MODEL, VSTOL TEST NO. 204

ALPHA	CL	CD	CPM	CLE2	CDE2	CME2	CLCT	CDCT	CMCT	NPR	CT	CTRF	THETAJ
RUN = 466													
-3.80	.5536	-1.3092	-.8846	.1149	.1294	-.4889	.5595	-1.3285	-.8899	2.5308	1.4802	1.5041	20.76
-2.01	.7369	-1.3076	-.8148	.2524	.1205	-.4180	.7421	-1.3229	-.8190	2.5387	1.4841	1.5080	20.75
.00	.9494	-1.2929	-.7234	.4164	.1134	-.3277	.9566	-1.3119	-.7287	2.5351	1.4800	1.5039	20.76
1.97	1.1572	-1.2777	-.6398	.5735	.1161	-.2422	1.1622	-1.2898	-.6433	2.5386	1.4871	1.5111	20.75
4.01	1.3710	-1.2378	-.5498	.7391	.1317	-.1530	1.3777	-1.2523	-.5540	2.5372	1.4843	1.5083	20.76
6.01	1.6021	-1.1920	-.4416	.9226	.1553	-.0446	1.6090	-1.2057	-.4457	2.5376	1.4849	1.5089	20.76
8.06	1.7825	-1.1307	-.3619	1.0543	.1934	.0357	1.7888	-1.1421	-.3653	2.5401	1.4871	1.5111	20.75
10.00	1.9850	-1.0528	-.2643	1.2141	.2426	.1324	1.9936	-1.0672	-.2687	2.5400	1.4835	1.5074	20.75
12.01	2.1731	-.9614	-.1701	1.3573	.3062	.2265	2.1822	-.9755	-.1745	2.5380	1.4835	1.5074	20.75
14.03	2.3638	-.8545	-.0796	1.5050	.3819	.3165	2.3745	-.8700	-.0846	2.5367	1.4815	1.5054	20.76
16.02	2.5323	-.7426	-.0076	1.6299	.4649	.3890	2.5423	-.7561	-.0121	2.5381	1.4834	1.5074	20.75
18.05	2.7391	-.6146	.1111	1.7938	.5609	.5080	2.7490	-.6269	.1069	2.5387	1.4845	1.5085	20.75
19.99	2.9040	-.4897	.2218	1.9189	.6538	.6189	2.9137	-.5009	.2179	2.5379	1.4854	1.5093	20.75
22.05	3.0419	-.3548	.3149	2.0153	.7537	.7124	3.0510	-.3646	.3114	2.5392	1.4863	1.5103	20.75
24.07	3.1939	-.1952	.4079	2.1336	.8716	.8037	3.2081	-.2095	.4026	2.5370	1.4802	1.5041	20.76
RUN = 467													
-3.79	.6462	-1.8183	-.9993	.1072	.1195	-.4898	.6533	-1.8436	-1.0050	3.0830	1.9741	2.0114	19.34
-1.97	.8547	-1.8417	-.9402	.2418	.1083	-.4198	.8530	-1.8364	-.9388	3.1202	2.0054	2.0440	19.42
-.01	1.0789	-1.8161	-.8540	.4045	.1005	-.3376	1.0810	-1.8221	-.8556	3.1076	1.9938	2.0318	19.39
1.97	1.2809	-1.7899	-.7795	.5392	.1054	-.2620	1.2820	-1.7927	-.7802	3.1103	1.9971	2.0352	19.40
4.01	1.5379	-1.7512	-.6777	.7294	.1172	-.1601	1.5333	-1.7534	-.6783	3.1088	1.9977	2.0359	19.39
5.98	1.7566	-1.7017	-.5860	.8821	.1418	-.0672	1.7557	-1.6998	-.5855	3.1104	2.0021	2.0404	19.40
8.00	1.9886	-1.6388	-.4820	1.0478	.1759	.0379	1.9859	-1.6337	-.4806	3.1134	2.0056	2.0440	19.40
10.02	2.2023	-1.5434	-.3852	1.2006	.2278	.1334	2.2013	-1.5476	-.3849	3.1110	2.0010	2.0392	19.40
12.05	2.3970	-1.4468	-.2830	1.3371	.2865	.2334	2.4004	-1.4524	-.2846	3.1073	1.9935	2.0316	19.39
14.05	2.5845	-1.3435	-.2006	1.4628	.3551	.3167	2.5860	-1.3457	-.2013	3.1067	1.9974	2.0355	19.39
16.02	2.7894	-1.2081	-.1166	1.6158	.4422	.3981	2.7970	-1.2189	-.1200	3.1080	1.9870	2.0250	19.39
18.07	2.9704	-1.0859	-.0133	1.7346	.5270	.5032	2.9743	-1.0908	-.0149	3.1074	1.9938	2.0319	19.39
20.09	3.1566	-.9527	.0991	1.8600	.6214	.6175	3.1559	-.9518	.0993	3.1084	2.0011	2.0393	19.39
22.08	3.3135	-.8002	.2196	1.9719	.7177	.7347	3.3217	-.8095	.2165	3.1094	1.9878	2.0258	19.40
24.06	3.4893	-.6521	.3105	2.0858	.8292	.8294	3.4876	-.6504	.3112	3.1095	2.0023	2.0406	19.40
RUN = 468													
8.00	.9679	.0984	.0518	.9226	.1884	.0751	.9685	.0971	.0514	1.0372	.0985	.1007	18.74
8.01	1.0804	-.0127	.0086	.9963	.1681	.0557	1.0828	-.0179	.0072	1.1330	.1944	.1994	16.92
8.02	1.2055	-.2070	-.0636	1.0373	.1687	.0333	1.2048	-.2055	-.0632	1.3458	.4016	.4116	16.10
8.04	1.4010	-.5330	-.1566	1.0805	.2176	.0301	1.4010	-.5329	-.1566	1.7691	.8001	.8161	15.09
8.06	1.6605	-.8351	-.2841	1.0781	.2146	.0294	1.6701	-.8523	-.2892	2.1924	1.1806	1.2005	20.96
8.07	1.8333	-1.2177	-.3830	1.0609	.1960	.0412	1.8406	-1.2310	-.3870	2.6523	1.5851	1.6109	20.58
8.06	2.0079	-1.6032	-.4517	1.0799	.1861	.0594	2.0181	-1.6229	-.4574	3.0903	1.9782	2.0157	19.35
8.02	2.5133	-2.8020	-.7469	1.0433	.1934	.0723	2.4889	-2.7523	-.7333	3.5702	3.2541	3.3367	18.12

TABLE 5.- CONTINUED.

VEO-WING 1/10-SCALE RESEARCH MODEL, VSTOL TEST NO. 204

ALPHA	CL	CD	CPM	CLE2	CDE2	CME2	CLCT	CDCT	CMCT	NPR	CT	CTRF	THETAJ
RUN = 469													
-3.69	.2252	.0833	-.0027	.2252	.0833	-.0027	.2252	.0833	-.0027	1.0000	0.0000	0.0000	0.00
-1.92	.3523	.0927	.0822	.3523	.0927	.0822	.3523	.0927	.0822	1.0000	0.0000	0.0000	0.00
.03	.4764	.1080	.1589	.4764	.1080	.1589	.4764	.1080	.1589	1.0000	0.0000	0.0000	0.00
1.95	.6383	.1317	.2546	.6383	.1317	.2546	.6383	.1317	.2546	1.0001	0.0000	0.0000	0.00
4.08	.8100	.1724	.3580	.8100	.1724	.3580	.8100	.1724	.3580	1.0000	0.0000	0.0000	0.00
6.02	.9726	.2209	.4458	.9726	.2209	.4458	.9726	.2209	.4458	1.0000	0.0000	0.0000	0.00
7.97	1.1127	.2783	.5223	1.1127	.2783	.5223	1.1127	.2783	.5223	1.0000	0.0000	0.0000	0.00
10.05	1.2576	.3524	.6087	1.2576	.3524	.6087	1.2576	.3524	.6087	1.0000	0.0000	0.0000	0.00
12.05	1.4266	.4423	.7088	1.4266	.4423	.7088	1.4266	.4423	.7088	1.0000	0.0000	0.0000	0.00
14.02	1.5218	.5057	.7810	1.5218	.5057	.7810	1.5218	.5057	.7810	1.0000	0.0000	0.0000	0.00
16.03	1.6317	.5816	.8449	1.6317	.5816	.8449	1.6317	.5816	.8449	1.0000	0.0000	0.0000	0.00
18.04	1.7291	.6656	.9481	1.7291	.6656	.9481	1.7291	.6656	.9481	1.0000	0.0000	0.0000	0.00
20.02	1.7892	.7494	1.0265	1.7892	.7494	1.0265	1.7892	.7494	1.0265	1.0000	0.0000	0.0000	0.00
22.05	1.8347	.8430	1.0680	1.8347	.8430	1.0680	1.8347	.8430	1.0680	1.0000	0.0000	0.0000	0.00
24.07	1.9000	.9472	1.1149	1.9000	.9472	1.1149	1.9000	.9472	1.1149	1.0000	0.0000	0.0000	0.00
RUN = 470													
-3.68	.2440	.0731	.0069	.2440	.0731	.0069	.2440	.0731	.0069	1.0000	0.0000	0.0000	0.00
-2.08	.3353	.0819	.0707	.3353	.0819	.0707	.3353	.0819	.0707	1.0000	0.0000	0.0000	0.00
-.04	.4960	.0972	.1721	.4960	.0972	.1721	.4960	.0972	.1721	1.0000	0.0000	0.0000	0.00
1.96	.6528	.1225	.2585	.6528	.1225	.2585	.6528	.1225	.2585	1.0000	0.0000	0.0000	0.00
3.99	.8036	.1616	.3454	.8036	.1616	.3454	.8036	.1616	.3454	1.0000	0.0000	0.0000	0.00
6.10	.9710	.2104	.4411	.9710	.2104	.4411	.9710	.2104	.4411	1.0000	0.0000	0.0000	0.00
8.06	1.1197	.2693	.5220	1.1197	.2693	.5220	1.1197	.2693	.5220	1.0000	0.0000	0.0000	0.00
10.03	1.2875	.3446	.6141	1.2875	.3446	.6141	1.2875	.3446	.6141	1.0000	0.0000	0.0000	0.00
12.01	1.4159	.4189	.6985	1.4159	.4189	.6985	1.4159	.4189	.6985	1.0000	0.0000	0.0000	0.00
14.07	1.5256	.4893	.7785	1.5256	.4893	.7785	1.5256	.4893	.7785	1.0000	0.0000	0.0000	0.00
16.14	1.6525	.5686	.8534	1.6525	.5686	.8534	1.6525	.5686	.8534	1.0000	0.0000	0.0000	0.00
18.01	1.7257	.6443	.9405	1.7257	.6443	.9405	1.7257	.6443	.9405	1.0000	0.0000	0.0000	0.00
20.05	1.7991	.7353	1.0320	1.7991	.7353	1.0320	1.7991	.7353	1.0320	1.0000	0.0000	0.0000	0.00
22.00	1.8572	.8329	1.0705	1.8572	.8329	1.0705	1.8572	.8329	1.0705	1.0000	0.0000	0.0000	0.00
24.09	1.9203	.9391	1.1106	1.9203	.9391	1.1106	1.9203	.9391	1.1106	1.0000	0.0000	0.0000	0.00

TABLE 5.- CONTINUED.

VED-WING 1/10-SCALE RESEARCH MODEL,VSTOL TEST NO. 204

ALPHA	CL	CD	CPM	CLE2	CDE2	CME2	CLCT	CDCT	CMCT	NPR	CT	CTRF	THETAJ
RUN = 473													
-3.60	.4119	-.4201	-.1532	.3104	.0784	-.0358	.4125	-.4231	-.1540	1.4491	.4970	.5037	15.10
-2.04	.5471	-.4052	-.0724	.4328	.0858	.0441	.5489	-.4127	-.0742	1.4446	.4925	.5042	15.15
-.02	.7160	-.3807	.0150	.5848	.1041	.1311	.7185	-.3900	.0128	1.4427	.4906	.5023	15.17
2.06	.8864	-.3531	.1013	.7362	.1340	.2189	.8871	-.3551	.1008	1.4510	.4979	.5097	15.08
4.07	1.0683	-.3069	.2011	.9009	.1748	.3188	1.0689	-.3087	.2007	1.4507	.4982	.5100	15.09
6.03	1.2293	-.2501	.2825	1.0462	.2239	.3997	1.2306	-.2536	.2816	1.4502	.4964	.5081	15.09
8.02	1.4269	-.1761	.3862	1.2274	.2913	.5035	1.4283	-.1794	.3853	1.4505	.4965	.5082	15.09
10.01	1.6078	-.0916	.4865	1.3927	.3674	.6035	1.6099	-.0961	.4853	1.4495	.4952	.5069	15.10
12.04	1.7644	.0035	.5742	1.5333	.4545	.6911	1.7667	-.0010	.5730	1.4498	.4950	.5067	15.09
14.02	1.8955	.0855	.6566	1.6481	.5299	.7739	1.8971	.0827	.6558	1.4505	.4968	.5086	15.09
16.09	2.0620	.1752	.7324	1.7977	.6122	.8502	2.0625	.1743	.7321	1.4514	.4989	.5107	15.03
18.13	2.1917	.2853	.8197	1.9124	.7118	.9374	2.1928	.2836	.8193	1.4498	.4980	.5098	15.09
20.07	2.2880	.3916	.8988	1.9935	.8096	1.0168	2.2883	.3912	.8987	1.4500	.4995	.5113	15.09
22.09	2.3807	.5152	.9558	2.0720	.9223	1.0738	2.3813	.5145	.9556	1.4503	.4991	.5109	15.09
24.05	2.4790	.6485	1.0250	2.1565	1.0447	1.1429	2.4796	.6477	1.0248	1.4502	.4990	.5108	15.09
RUN = 474													
-3.64	.5664	-.7727	-.2649	.3611	.1136	-.0484	.5680	-.7798	-.2666	1.8844	.8928	.9097	16.68
-2.00	.7260	-.7521	-.1597	.4976	.1253	.0455	.7286	-.7623	-.1722	1.8799	.8897	.9066	16.59
-.00	.8974	-.7288	-.0893	.6365	.1448	.1274	.8989	-.7340	-.0906	1.8820	.8947	.9117	16.63
2.07	1.1085	-.6813	.0102	.8169	.1802	.2264	1.1109	-.6804	.0084	1.8820	.8926	.9096	16.63
4.00	1.2760	-.6342	.0959	.9544	.2193	.3127	1.2778	-.6389	.0947	1.8828	.8950	.9120	16.64
5.98	1.4524	-.5694	.1811	1.1020	.2706	.3976	1.4550	-.5758	.1795	1.8835	.8933	.9102	16.66
8.04	1.6784	-.4851	.2988	1.2983	.3415	.5151	1.6815	-.4917	.2970	1.8836	.8928	.9097	16.66
10.03	1.8180	-.4028	.3716	1.4101	.4098	.5876	1.8215	-.4098	.3697	1.8819	.8922	.9092	16.63
12.08	2.0108	-.2935	.4737	1.5753	.5014	.6891	2.0159	-.3029	.4711	1.8825	.8896	.9065	16.64
14.06	2.1827	-.1931	.5677	1.7177	.5898	.7842	2.1860	-.1987	.5662	1.8829	.8936	.9106	16.65
16.10	2.3548	-.0994	.6446	1.8617	.6675	.8614	2.3577	-.1039	.6434	1.8827	.8948	.9118	16.64
18.03	2.4791	.0161	.7089	1.9615	.7639	.9253	2.4834	.0099	.7071	1.8838	.8926	.9095	16.66
20.01	2.6126	.1460	.8007	2.0706	.8750	1.0165	2.6177	.1391	.7986	1.8817	.8915	.9084	16.62
22.07	2.7541	.2969	.8679	2.1838	1.0085	1.0846	2.7573	.2929	.8667	1.8825	.8950	.9120	16.64
24.07	2.8541	.4461	.9330	2.2611	1.1358	1.1491	2.8590	.4404	.9312	1.8816	.8927	.9096	16.62

TABLE 5.- CONTINUED.

VEO-WING 1/10-SCALE RESEARCH MODEL, VSTOL TEST NO. 204

ALPHA	CL	CD	CPM	CLE2	CDE2	CME2	CLCT	CDCT	CMCT	NPR	CT	CTRF	THETAJ
RUN = 475													
-3.52	.7856	-1.3538	-.4134	.3399	.0850	-.0168	.7909	-1.3709	-.4181	2.5536	1.4824	1.5063	20.74
-2.02	.8990	-1.3404	-.3699	.4129	.0955	.0292	.9016	-1.3482	-.3721	2.5652	1.4919	1.5160	20.73
.01	1.1417	-1.3038	-.2523	.6055	.1126	.1465	1.1451	-1.3129	-.2549	2.5642	1.4904	1.5145	20.73
2.03	1.3603	-1.2568	-.1542	.7723	.1449	.2461	1.3619	-1.2606	-.1553	2.5642	1.4959	1.5201	20.73
4.05	1.5538	-1.1909	-.0666	.9184	.1855	.3326	1.5573	-1.1984	-.0688	2.5630	1.4918	1.5159	20.73
6.06	1.7595	-1.1150	.0239	1.0772	.2368	.4276	1.7640	-1.1239	.0263	2.5636	1.4902	1.5142	20.73
8.04	1.9817	-1.0261	.1244	1.2524	.3022	.5234	1.9859	-1.0339	.1220	2.5645	1.4913	1.5153	20.73
10.06	2.1725	-.9206	.2149	1.3995	.3766	.6125	2.1797	-.9328	.2111	2.5652	1.4860	1.5100	20.73
12.09	2.3892	-.8020	.3214	1.5693	.4686	.7195	2.3958	-.8124	.3182	2.5652	1.4879	1.5119	20.73
14.03	2.5762	-.6895	.4114	1.7127	.5547	.8101	2.5318	-.6975	.4088	2.5648	1.4903	1.5144	20.73
16.03	2.7125	-.5846	.4589	1.8075	.6270	.8571	2.7196	-.5942	.4558	2.5649	1.4882	1.5123	20.73
18.10	2.9159	-.4397	.5509	1.9659	.7408	.9498	2.9215	-.4467	.5485	2.5644	1.4912	1.5153	20.73
20.13	3.0760	-.2950	.6357	2.0806	.8559	1.0363	3.0777	-.2970	.6350	2.5627	1.4975	1.5217	20.73
22.07	3.2084	-.1238	.7060	2.1856	.9807	1.1024	3.2212	-.1377	.7011	2.5620	1.4814	1.5053	20.73
24.07	3.3560	.0528	.7786	2.2936	1.1228	1.1756	3.3675	.0412	.7743	2.5617	1.4839	1.5079	20.73
RUN = 476													
-3.61	.8551	-1.8762	-.5599	.3027	.0737	-.0437	.8584	-1.8876	-.5629	3.1231	1.9834	2.0267	19.42
-2.01	1.0238	-1.8374	-.4772	.4228	.0323	.0342	1.0317	-1.8628	-.4839	3.1081	1.9739	2.0116	19.39
.01	1.2664	-1.7946	-.3742	.5988	.1016	.1366	1.2757	-1.8209	-.3813	3.1045	1.9727	2.0103	19.39
2.01	1.4720	-1.7418	-.2958	.7390	.1289	.2146	1.4826	-1.7687	-.3032	3.1033	1.9716	2.0092	19.38
4.03	1.6924	-1.6823	-.1982	.8908	.1681	.3145	1.7010	-1.7022	-.2037	3.1098	1.9787	2.0165	19.40
6.00	1.9368	-1.6089	-.0935	1.0692	.2189	.4207	1.9432	-1.6224	-.0973	3.1070	1.9853	2.0232	19.39
7.98	2.1440	-1.4957	-.0015	1.2233	.2827	.5075	2.1135	-1.4368	.0153	3.1073	1.9650	2.0025	19.39
10.07	2.3842	-1.3906	.0969	1.3945	.3617	.6083	2.3988	-1.4129	.0904	3.1051	1.9749	2.0125	19.39
12.03	2.5874	-1.2752	.1892	1.5384	.4420	.7006	2.6009	-1.2973	.1826	3.1057	1.9746	2.0123	19.39
14.09	2.7970	-1.1405	.2883	1.6884	.5352	.7990	2.8130	-1.1647	.2809	3.1082	1.9715	2.0092	19.39
16.04	2.9556	-1.0353	.3459	1.7901	.6030	.8567	2.9716	-1.0573	.3388	3.1056	1.9729	2.0105	19.39
18.08	3.1653	-.8778	.4408	1.9452	.7140	.9505	3.1231	-.8228	.4584	3.1061	1.9681	2.0056	19.39
20.13	3.3037	-.7323	.5103	2.0259	.8172	1.0203	3.3225	-.7552	.5028	3.1008	1.9709	2.0084	19.38
22.06	3.4702	-.5644	.5818	2.1398	.9422	1.0923	3.4888	-.5855	.5746	3.1023	1.9723	2.0099	19.38
24.07	3.6119	-.3763	.6554	2.2363	1.0752	1.1636	3.5682	-.3302	.6716	3.1061	1.9624	1.9998	19.39
RUN = 477													
8.03	1.0926	.2885	.4928	1.0926	.2885	.4928	1.0926	.2885	.4928	1.0000	0.0000	0.0000	0.00
8.03	1.1434	.1998	.5009	1.0984	.2889	.5240	1.1444	.1977	.5003	1.0378	.0977	.0998	18.73
8.04	1.2407	.0859	.4488	1.1560	.2683	.4963	1.2424	.0822	.4478	1.1371	.1960	.2011	16.86
8.07	1.4189	-.0866	.4219	1.2536	.2811	.5168	1.4217	-.0928	.4203	1.3422	.3933	.4031	16.13
8.03	1.5960	-.4093	.3175	1.2793	.3319	.5020	1.5998	-.4186	.3153	1.7699	.7907	.8065	15.10
8.02	1.8522	-.7420	.1937	1.2652	.3183	.5153	1.8561	-.7491	.1966	2.2240	1.1920	1.2119	20.95
8.03	1.9948	-1.1155	.0849	1.2253	.2975	.5082	2.0030	-1.1305	.0804	2.6659	1.5832	1.6091	20.54
8.04	2.1500	-1.4946	-.0015	1.2234	.2896	.5101	2.1629	-1.5193	-.0086	3.1153	1.9726	2.0105	19.41
8.03	2.6437	-2.6217	-.2739	1.2025	.2968	.5237	2.6545	-2.6436	-.2849	3.5361	3.1762	3.2550	18.25
8.03	3.3889	-4.0413	-.6675	1.2315	.2977	.5334	3.3749	-4.0130	-.6596	3.5042	4.7308	4.8457	13.40

TABLE 5.- CONTINUED.

VEO-WING 1/10-SCALE RESEARCH MODEL,VSTOL TEST NO. 204

ALPHA	CL	CD	CPM	CLE2	CDE2	CME2	CLCT	CDCT	CMCT	NPR	CT	CTRF	THETAJ
RUN = 478													
-3.75	-.1256	.0345	-.1679	-.1256	.0345	-.1679	-.1256	.0345	-.1679	1.0045	0.0000	0.0000	0.00
-2.02	-.0127	.0265	-.1085	-.0127	.0265	-.1085	-.0127	.0265	-.1085	1.0047	0.0000	0.0000	0.00
.01	.1718	.0228	.0003	.1718	.0228	.0003	.1718	.0228	.0003	1.0048	0.0000	0.0000	0.00
2.01	.3253	.0292	.0916	.3253	.0292	.0916	.3253	.0292	.0916	1.0046	0.0000	0.0000	0.00
4.03	.4853	.0443	.1892	.4853	.0443	.1892	.4853	.0443	.1892	1.0039	0.0000	0.0000	0.00
6.00	.6444	.0677	.2945	.6444	.0677	.2945	.6444	.0677	.2945	1.0042	0.0000	0.0000	0.00
8.06	.8150	.1041	.3882	.8150	.1041	.3882	.8150	.1041	.3882	1.0038	0.0000	0.0000	0.00
10.02	.9911	.1524	.4816	.9911	.1524	.4816	.9911	.1524	.4816	1.0036	0.0000	0.0000	0.00
12.00	1.1702	.2178	.5783	1.1702	.2178	.5783	1.1702	.2178	.5783	1.0034	0.0000	0.0000	0.00
14.03	1.3362	.2896	.6748	1.3362	.2896	.6748	1.3362	.2896	.6748	1.0043	0.0000	0.0000	0.00
16.04	1.4867	.3735	.7693	1.4867	.3735	.7693	1.4867	.3735	.7693	1.0039	0.0000	0.0000	0.00
18.02	1.5844	.4533	.8568	1.5844	.4533	.8568	1.5844	.4533	.8568	1.0039	0.0000	0.0000	0.00
20.07	1.7129	.5507	.9699	1.7129	.5507	.9699	1.7129	.5507	.9699	1.0032	0.0000	0.0000	0.00
22.12	1.8392	.6575	1.0955	1.8392	.6575	1.0955	1.8392	.6575	1.0955	1.0020	0.0000	0.0000	0.00
24.06	1.9271	.7657	1.1697	1.9271	.7657	1.1697	1.9271	.7657	1.1697	1.0007	0.0000	0.0000	0.00
RUN = 480													
-3.74	-.1187	-.4583	-.2657	-.1482	.0331	-.1897	-.1182	-.4777	-.2672	1.4433	.4909	.5023	7.11
-2.02	.0472	-.4745	-.1877	.0027	.0246	-.1119	.0482	-.4851	-.1893	1.4439	.4896	.5011	7.11
-.02	.2603	-.4855	-.0862	.1971	.0226	-.0085	.2603	-.4851	-.0861	1.4533	.5004	.5120	7.11
1.99	.4149	-.4760	-.0117	.3339	.0296	.0660	.4148	-.4756	-.0116	1.4534	.5004	.5120	7.11
4.00	.6122	-.4546	.0892	.5139	.0465	.1667	.6124	-.4555	.0891	1.4533	.4991	.5107	7.11
6.02	.7981	-.4264	.1945	.6819	.0718	.2721	.7981	-.4265	.1945	1.4532	.4999	.5115	7.11
8.05	1.0239	-.3825	.3095	.8906	.1096	.3868	1.0244	-.3842	.3093	1.4532	.4983	.5099	7.11
10.06	1.2217	-.3214	.3914	1.0716	.1643	.4685	1.2226	-.3245	.3909	1.4522	.4968	.5084	7.11
12.02	1.4194	-.2511	.4950	1.2527	.2296	.5721	1.4204	-.2538	.4946	1.4533	.4972	.5087	7.11
14.08	1.6161	-.1672	.5871	1.4313	.3095	.6646	1.6162	-.1676	.5870	1.4519	.4996	.5113	7.11
16.03	1.7862	-.0734	.6781	1.5846	.3984	.7559	1.7856	-.0720	.6783	1.4520	.5014	.5131	7.11
18.05	1.9912	.0519	.7867	1.7744	.5132	.8639	1.9920	.0502	.7864	1.4509	.4982	.5098	7.11
20.07	2.1375	.1623	.8753	1.9037	.6175	.9528	2.1374	.1624	.8753	1.4514	.5001	.5117	7.11
22.05	2.2820	.2887	.9724	2.0332	.7344	1.0497	2.2825	.2877	.9722	1.4524	.4989	.5105	7.11
24.05	2.4209	.4287	1.0656	2.1568	.8654	1.1430	2.4216	.4276	1.0654	1.4530	.4988	.5104	7.11

TABLE 5.- CONTINUED.

VED-WING 1/10-SCALE RESEARCH MODEL, VSTOL TEST NO. 204

ALPHA	CL	CD	CPM	CLE2	CDE2	CME2	CLCT	CDCT	CMCT	NPR	CT	CTRF	THETAJ
RUN = 481													
-3.70	-.0678	-.8491	-.3126	-.1224	.0609	-.1916	-.0677	-.8513	-.3129	1.8886	.8978	.9116	7.13
-2.02	.1221	-.8531	-.2230	.0411	.0512	-.1024	.1226	-.8590	-.2238	1.8848	.8942	.9080	7.13
-.05	.2891	-.8500	-.1526	.1770	.0519	-.0320	.2897	-.8549	-.1533	1.8871	.8952	.9089	7.13
1.98	.5168	-.8424	-.0486	.3725	.0579	.0725	.5172	-.8444	-.0489	1.8861	.8980	.9118	7.13
4.00	.7162	-.8203	.0465	.5401	.0747	.1676	.7165	-.8219	.0463	1.8876	.8984	.9122	7.13
6.07	.9177	-.7860	.1409	.7093	.1023	.2620	.9181	-.7874	.1408	1.8876	.8986	.9124	7.13
8.08	1.1694	-.7295	.2699	.9510	.1470	.3905	1.1908	-.7348	.2692	1.8884	.8946	.9083	7.13
10.08	1.3795	-.6679	.3482	1.1109	.1991	.4687	1.3813	-.6738	.3474	1.8864	.8940	.9077	7.13
12.04	1.6207	-.5900	.4535	1.3216	.2705	.5744	1.6216	-.5927	.4531	1.8867	.8972	.9110	7.13
14.05	1.7681	-.5029	.5333	1.4594	.3454	.6540	1.7896	-.5067	.5327	1.8885	.8960	.9098	7.13
16.04	1.9888	-.3991	.6275	1.6301	.4390	.7485	1.9897	-.4011	.6273	1.8872	.8978	.9116	7.13
18.09	2.1801	-.2730	.7127	1.7935	.5477	.8331	2.1830	-.2790	.7119	1.8875	.8935	.9072	7.13
20.13	2.4060	-.1269	.8254	1.9904	.6795	.9468	2.4090	-.1328	.8255	1.8868	.8934	.9071	7.13
22.09	2.5802	.0129	.9252	2.1369	.8054	1.0458	2.5830	.0078	.9245	1.8864	.8943	.9081	7.13
24.11	2.7209	.1590	1.0009	2.2439	.9372	1.1217	2.7228	.1559	1.0004	1.8858	.8964	.9102	7.13
RUN = 482													
-3.80	-.0418	-1.4417	-.3991	-.1337	.0535	-.2011	-.0410	-1.4549	-.4008	2.5584	1.4869	1.4980	7.32
-2.06	.1457	-1.4445	-.3311	.0093	.0439	-.1341	.1472	-1.4611	-.3333	2.5500	1.4835	1.4947	7.29
-.02	.3997	-1.4395	-.2287	.2105	.0423	-.0318	.4019	-1.4568	-.2310	2.5515	1.4827	1.4938	7.30
2.00	.6188	-1.4274	-.1401	.3764	.0518	.0577	.6207	-1.4395	-.1418	2.5549	1.4878	1.4989	7.31
4.01	.8487	-1.3888	-.0377	.5568	.0709	.1586	.8532	-1.4110	-.0407	2.5524	1.4776	1.4887	7.30
6.05	1.0913	-1.3510	.0617	.7474	.0983	.2582	1.0963	-1.3721	.0588	2.5530	1.4785	1.4895	7.30
8.07	1.3635	-1.2952	.1740	.9687	.1414	.3704	1.3691	-1.3158	.1712	2.5513	1.4788	1.4899	7.30
10.08	1.6142	-1.2380	.2636	1.1627	.2000	.4636	1.6154	-1.2418	.2631	2.5696	1.4951	1.5072	7.35
11.98	1.8388	-1.1571	.3523	1.3395	.2654	.5525	1.8400	-1.1605	.3519	2.5714	1.4964	1.5075	7.35
13.96	2.0474	-1.0525	.4382	1.5023	.3451	.6373	2.0514	-1.0627	.4368	2.5698	1.4891	1.5001	7.35
16.01	2.3043	-.9346	.5408	1.7061	.4503	.7409	2.3054	-.9370	.5404	2.5701	1.4974	1.5085	7.35
18.06	2.5339	-.7920	.6283	1.8879	.5682	.8280	2.5362	-.7968	.6276	2.5691	1.4947	1.5058	7.35
20.05	2.7400	-.6487	.7160	2.0477	.6878	.9154	2.7428	-.6540	.7152	2.5656	1.4941	1.5052	7.34
22.07	2.9786	-.4805	.8298	2.2380	.8334	1.0296	2.9800	-.4830	.8294	2.5658	1.4971	1.5082	7.34
24.06	3.1410	-.3130	.9073	2.3585	.9690	1.1063	3.1459	-.3209	.9060	2.5661	1.4908	1.5019	7.34

TABLE 5.- CONTINUED.

VED-WING 1/10-SCALE RESEARCH MODEL,VSTOL TEST NO. 204

ALPHA	CL	CD	CPM	CLE2	CDE2	CME2	CLCT	CDCT	CMCT	NPR	CT	CTRF	THETAJ
RUN = 483													
-3.73	.0067	-1.9585	-.5082	-.1331	.0419	-.2173	.0075	-1.9717	-.5101	3.1155	1.9869	2.0052	7.72
-2.04	.2308	-1.9504	-.4216	.0316	.0330	-.1314	.2333	-1.9752	-.4252	3.1074	1.9753	1.9934	7.78
-.06	.4756	-1.9428	-.3323	.2078	.0338	-.0420	.4783	-1.9663	-.3358	3.1073	1.9765	1.9946	7.78
1.96	.7067	-1.9297	-.2499	.3690	.0410	.0409	.7098	-1.9484	-.2526	3.1094	1.9813	1.9995	7.76
3.99	.9799	-1.8982	-.1358	.5721	.0585	.1553	.9839	-1.9174	-.1386	3.1064	1.9806	1.9987	7.73
6.07	1.2111	-1.8432	-.0414	.7345	.0884	.2484	1.2180	-1.8712	-.0456	3.1059	1.9715	1.9895	7.79
8.00	1.4512	-1.7974	.0506	.9087	.1237	.3410	1.4572	-1.8187	.0474	3.1090	1.9781	1.9962	7.76
10.01	1.7125	-1.7240	.1433	1.1018	.1826	.4343	1.7175	-1.7396	.1410	3.1113	1.9838	2.0021	7.75
11.98	2.0151	-1.6206	.2643	1.3405	.2557	.5548	2.0233	-1.6436	.2607	3.1053	1.9759	1.9939	7.79
14.04	2.2758	-1.5077	.3612	1.5345	.3430	.6518	2.2850	-1.5306	.3577	3.1045	1.9756	1.9937	7.79
16.01	2.5004	-1.3878	.4526	1.6956	.4371	.7431	2.5100	-1.4095	.4491	3.1055	1.9765	1.9946	7.79
18.04	2.7296	-1.2394	.5366	1.8616	.5517	.8271	2.7417	-1.2645	.5325	3.1010	1.9724	1.9904	7.82
20.11	2.9941	-1.0684	.6486	2.0633	.6874	.9387	2.9614	-1.0066	.6588	3.1008	1.9693	1.9873	7.82
22.12	3.2077	-.9034	.7465	2.2152	.8198	1.0367	3.2225	-.9290	.7421	3.1009	1.9706	1.9886	7.82
24.07	3.3799	-.7323	.8277	2.3317	.9517	1.1174	3.3448	-.6760	.8374	3.0995	1.9657	1.9836	7.83
RUN = 484													
8.01	.8027	.1230	.3782	.8027	.1230	.3782	.8027	.1230	.3782	1.0027	0.0000	0.0000	0.00
8.00	.8006	.0276	.3724	.7737	.1293	.3872	.7993	.0327	.3732	1.0453	.1053	.1053	6.85
8.03	.8681	-.0896	.3434	.8137	.1010	.3707	.8696	-.0950	.3426	1.1359	.1945	.1982	7.90
8.02	.9711	-.2940	.3121	.8652	.0957	.3718	.9727	-.2997	.3113	1.3430	.3942	.4033	7.18
8.05	1.1379	-.6539	.2742	.9235	.1375	.3869	1.1363	-.6480	.2751	1.7354	.8060	.8199	7.11
8.06	1.2645	-1.0221	.1987	.9470	.1522	.3509	1.2633	-1.0178	.1992	2.2384	1.2043	1.2164	7.06
8.02	1.3934	-1.3940	.1390	.9628	.1415	.3579	1.3979	-1.4101	.1367	2.6695	1.5334	1.5947	7.64
8.02	1.4738	-1.7760	.0613	.9371	.1339	.3510	1.4603	-1.7107	.0712	3.1013	1.9673	1.9852	7.82
8.04	1.7184	-2.9481	-.0672	.9028	.1539	.3664	1.7034	-2.8910	-.0592	3.5111	3.1581	3.2074	6.70
8.02	2.1193	-4.4647	-.2936	.9044	.1632	.3533	2.1160	-4.4519	-.2918	3.4919	4.7130	4.7847	6.69
RUN = 485													
-3.68	.3053	.0674	-.2728	.3053	.0674	-.2728	.3053	.0674	-.2728	1.0000	0.0000	0.0000	0.00
-1.98	.4477	.0711	-.1861	.4477	.0711	-.1861	.4477	.0711	-.1861	1.0000	0.0000	0.0000	0.00
-.01	.5972	.0815	-.0933	.5972	.0815	-.0933	.5972	.0815	-.0933	1.0000	0.0000	0.0000	0.00
1.96	.7499	.0986	-.0001	.7499	.0986	-.0001	.7499	.0986	-.0001	1.0000	0.0000	0.0000	0.00
4.04	.9421	.1306	.1002	.9421	.1306	.1002	.9421	.1306	.1002	1.0000	0.0000	0.0000	0.00
6.05	1.1068	.1717	.1956	1.1068	.1717	.1956	1.1068	.1717	.1956	1.0000	0.0000	0.0000	0.00
8.07	1.2871	.2252	.3028	1.2871	.2252	.3028	1.2871	.2252	.3028	1.0000	0.0000	0.0000	0.00
10.02	1.4842	.2935	.4144	1.4842	.2935	.4144	1.4842	.2935	.4144	1.0000	0.0000	0.0000	0.00
12.02	1.6652	.3760	.5304	1.6652	.3760	.5304	1.6652	.3760	.5304	1.0000	0.0000	0.0000	0.00
14.07	1.7507	.4528	.6199	1.7507	.4528	.6199	1.7507	.4528	.6199	1.0000	0.0000	0.0000	0.00
16.12	1.8535	.5441	.6954	1.8535	.5441	.6954	1.8535	.5441	.6954	1.0000	0.0000	0.0000	0.00
18.05	1.9515	.6296	.7973	1.9515	.6296	.7973	1.9515	.6296	.7973	1.0000	0.0000	0.0000	0.00
20.02	2.0597	.7320	.9176	2.0597	.7320	.9176	2.0597	.7320	.9176	1.0001	0.0000	0.0000	0.00
22.08	2.1674	.8477	1.0437	2.1674	.8477	1.0437	2.1674	.8477	1.0437	1.0000	0.0000	0.0000	0.00
24.13	2.2352	.9672	1.1255	2.2352	.9672	1.1255	2.2352	.9672	1.1255	1.0000	0.0000	0.0000	0.00

TABLE 5.- CONTINUED.

VEO-WING 1/10-SCALE RESEARCH MODEL,VSTOL TEST NO. 204

ALPHA	CL	CD	CPM	CLE2	CDE2	CME2	CLCT	CDCT	CMCT	NPR	CT	CTRF	THETAJ
RUN = 487													
-3.63	.6223	-.4004	-.4491	.4864	.0825	-.3114	.6230	-.4028	-.4498	1.4492	.4975	.5018	19.36
-1.98	.7634	-.3829	-.3728	.6149	.0910	-.2365	.7657	-.3903	-.3750	1.4476	.4923	.4966	19.38
-.02	.9527	-.3623	-.2756	.7878	.1066	-.1391	.9552	-.3692	-.2776	1.4456	.4928	.4971	19.40
1.99	1.1358	-.3319	-.1750	.9545	.1305	-.0385	1.1386	-.3391	-.1771	1.4442	.4924	.4967	19.42
4.04	1.3266	-.2904	-.0706	1.1289	.1650	.0659	1.3298	-.2976	-.0728	1.4434	.4921	.4965	19.43
6.00	1.4987	-.2364	.0241	1.2861	.2107	.1602	1.5027	-.2448	.0215	1.4427	.4908	.4951	19.44
8.03	1.7199	-.1723	.1410	1.4394	.2735	.2785	1.7210	-.1745	.1403	1.4521	.4975	.5018	19.32
10.03	1.8731	-.0974	.2324	1.6269	.3406	.3701	1.8741	-.0990	.2318	1.4520	.4981	.5024	19.32
12.07	2.0296	.0000	.3222	1.7637	.4274	.4595	2.0315	-.0031	.3212	1.4508	.4964	.5007	19.33
14.05	2.2174	.1141	.4405	1.9423	.5312	.5776	2.2200	.1102	.4392	1.4490	.4954	.4996	19.36
16.08	2.3868	.2303	.5378	2.0966	.6378	.6751	2.3891	.2270	.5367	1.4434	.4960	.5003	19.37
18.00	2.5090	.3456	.6267	2.2056	.7426	.7639	2.5119	.3418	.6254	1.4467	.4953	.4996	19.39
20.02	2.6487	.4758	.7426	2.3324	.8607	.8795	2.6526	.4710	.7410	1.4461	.4939	.4982	19.39
22.07	2.7498	.6053	.8589	2.4196	.9739	.9959	2.7536	.6010	.8574	1.4453	.4944	.4987	19.40
24.11	2.8010	.7310	.9611	2.4575	1.0929	1.0981	2.8047	.7271	.9596	1.4457	.4947	.4990	19.40
RUN = 488													
-3.66	.8708	-.6981	-.6081	.5274	.1249	-.3142	.8741	-.7060	-.6110	1.8754	.8914	.8917	26.32
-1.95	1.0468	-.6763	-.5268	.6737	.1361	-.2306	1.0494	-.6819	-.5289	1.8887	.8938	.8940	26.31
.04	1.2154	-.6401	-.4459	.8168	.1564	-.1510	1.2197	-.6486	-.4491	1.8862	.8904	.8906	26.35
2.03	1.4160	-.6049	-.3467	.9878	.1825	-.0502	1.4179	-.6083	-.3480	1.8845	.8961	.8964	26.31
4.00	1.6202	-.5537	-.2349	1.1670	.2162	.0605	1.6237	-.5596	-.2371	1.8835	.8932	.8934	26.49
6.09	1.8288	-.4842	-.1280	1.3481	.2674	.1672	1.8332	-.4909	-.1306	1.8848	.8920	.8922	26.52
8.02	2.0010	-.4141	-.0365	1.4938	.3228	.2595	2.0042	-.4187	-.0384	1.8850	.8944	.8946	26.52
10.04	2.2025	-.3201	.0763	1.6712	.3971	.3715	2.2071	-.3263	.0738	1.8837	.8923	.8926	26.49
12.12	2.4110	-.2042	.1959	1.8527	.4946	.4917	2.4146	-.2087	.1939	1.8842	.8942	.8944	26.50
14.08	2.5883	-.0760	.2966	2.0077	.6022	.5918	2.5932	-.0817	.2941	1.8835	.8925	.8928	26.49
16.08	2.7579	.0496	.3774	2.1521	.7091	.6736	2.7611	.0461	.3759	1.8839	.8953	.8955	26.50
18.10	2.9188	.1845	.4809	2.2905	.8216	.7768	2.9226	.1806	.4791	1.8838	.8946	.8948	26.49
20.08	3.0700	.3336	.5931	2.4232	.9463	.8926	3.0768	.3272	.5951	1.8827	.8907	.8909	26.47
22.10	3.1719	.4736	.7081	2.5006	1.0657	1.0041	3.1757	.4702	.7064	1.8833	.8949	.8952	26.48
24.14	3.1932	.6032	.8087	2.5004	1.1720	1.1051	3.1962	.6008	.8075	1.8830	.8961	.8964	26.47

TABLE 5.- CONTINUED.

VFD-WING 1/10-SCALE RESEARCH MODEL;VSTOL TEST NO. 204

ALPHA	CL	CD	CPM	CLE2	CDE2	CME2	CLCT	CDCT	CMCT	NPR	CT	CTRF	THETAJ
RUN = 489													
-2.02	1.2915	-1.2079	-.7468	.6071	.1088	-.2312	1.2983	-1.2210	-.7519	2.5591	1.4853	1.4840	29.48
-.03	1.4812	-1.1659	-.6624	.7503	.1249	-.1466	1.4888	-1.1794	-.6678	2.5546	1.4845	1.4831	29.53
2.05	1.7121	-1.1140	-.5556	.9342	.1505	-.0401	1.7194	-1.1259	-.5614	2.5536	1.4860	1.4846	29.55
3.99	1.9105	-1.0488	-.4558	1.0944	.1825	.0571	1.9223	-1.0666	-.4642	2.5533	1.4787	1.4773	29.55
5.98	2.1427	-.9817	-.3499	1.2799	.2272	.1667	2.1505	-.9926	-.3545	2.5546	1.4866	1.4852	29.53
7.98	2.3886	-.8935	-.2282	1.4821	.2871	.2894	2.3948	-.9016	-.2318	2.5544	1.4898	1.4884	29.54
10.07	2.5696	-.7867	-.1309	1.6225	.3576	.3858	2.5780	-.7968	-.1355	2.5538	1.4863	1.4854	29.54
12.07	2.7543	-.6650	-.0230	1.7727	.4417	.4912	2.7671	-.6795	-.0297	2.5572	1.4806	1.4793	29.51
14.09	2.9733	-.5211	.0851	1.9493	.5538	.6013	2.9830	-.5312	.0802	2.5553	1.4860	1.4847	29.53
16.04	3.1709	-.3667	.1795	2.1177	.6659	.6923	3.1878	-.3833	.1713	2.5558	1.4763	1.4749	29.52
18.02	3.3397	-.2242	.2568	2.2458	.7760	.7823	3.3518	-.2353	.2611	2.5543	1.4836	1.4822	29.54
20.06	3.5172	-.0532	.3971	2.3959	.9018	.9093	3.5368	-.0699	.3882	2.5556	1.4743	1.4729	29.52
22.02	3.6436	.0973	.5002	2.4800	1.0213	1.0169	3.6536	.0394	.4958	2.5554	1.4873	1.4859	29.53
24.15	3.6779	.2634	.5914	2.4848	1.1406	1.1064	3.6922	.2529	.5852	2.5549	1.4823	1.4809	29.53
RUN = 490													
.00	1.5858	-1.6987	-.7758	.7545	.1175	-.1688	1.5959	-1.7210	-.7832	3.1079	1.9758	1.9975	24.59
2.06	1.8718	-1.6484	-.6482	.9743	.1401	-.0402	1.8812	-1.6671	-.6545	3.1090	1.9793	2.0011	24.59
3.97	2.0767	-1.5852	-.5567	1.1204	.1721	.0512	2.0869	-1.6039	-.5631	3.1087	1.9790	2.0007	24.59
6.08	2.3266	-1.5069	-.4440	1.3039	.2174	.1652	2.3354	-1.5218	-.4492	3.1069	1.9831	2.0047	24.60
8.04	2.5429	-1.4124	-.3424	1.4639	.2730	.2656	2.5542	-1.4299	-.3487	3.1088	1.9794	2.0012	24.59
10.09	2.7768	-1.2932	-.2288	1.6423	.3463	.3770	2.7929	-1.3164	-.2374	3.1079	1.9721	1.9987	24.59
12.04	2.9866	-1.1711	-.1204	1.7963	.4293	.4859	3.0029	-1.1929	-.1237	3.1058	1.9730	1.9945	24.60
14.03	3.1822	-1.0235	-.0262	1.9411	.5294	.5782	3.1401	-.9709	-.0057	3.1041	1.9666	1.9830	24.61
16.07	3.4170	-.8621	.0740	2.1164	.6519	.6805	3.4339	-.8818	.0661	3.1077	1.9744	1.9960	24.59
18.06	3.6391	-.7055	.1754	2.2808	.7692	.7846	3.6506	-.7130	.1702	3.1079	1.9832	2.0050	24.59
20.13	3.8074	-.5264	.2883	2.4026	.8921	.8950	3.8254	-.5445	.2805	3.1073	1.9748	1.9964	24.59
22.06	3.9451	-.3664	.3888	2.4879	1.0088	.9977	3.9583	-.3790	.3833	3.1075	1.9820	2.0037	24.59
24.07	3.9978	-.2001	.4976	2.4981	1.1194	1.1044	4.0162	-.2163	.4901	3.1093	1.9758	1.9975	24.58
RUN = 491													
8.03	1.2758	.2500	.2892	1.2758	.2500	.2892	1.2758	.2500	.2892	1.0000	0.0000	0.0000	0.00
8.03	1.3218	.1682	.2615	1.2714	.2518	.2920	1.3235	.1655	.2605	1.0368	.0968	.0976	23.06
8.05	1.4990	.0831	.1985	1.3950	.2556	.2583	1.4997	.0820	.1981	1.1391	.1987	.2014	23.04
8.03	1.6588	-.0895	.1411	1.4671	.2599	.2540	1.6616	-.0947	.1394	1.3405	.3941	.3985	20.72
8.06	1.9222	-.3519	.0146	1.5062	.3203	.2605	1.9280	-.3613	.0111	1.7680	.7889	.7905	23.70
8.02	2.2578	-.6017	-.1575	1.4945	.3032	.2728	2.2664	-.6119	-.1623	2.2170	1.1866	1.1838	32.13
8.02	2.3870	-.9885	-.2647	1.4479	.2909	.2712	2.3953	-.9997	-.2694	2.6739	1.5860	1.5870	28.26
8.03	2.5361	-1.3969	-.3426	1.4614	.2799	.2634	2.5521	-1.4219	-.3517	3.0990	1.9706	1.9916	24.63
8.01	3.1284	-2.4488	-.7313	1.4125	.3217	.2384	3.1431	-2.4726	-.7396	3.5122	3.1727	3.2587	23.76
8.01	3.9936	-3.7856	-1.2057	1.4390	.3397	.2370	3.9735	-3.7613	-1.1972	3.4955	4.7278	4.8522	23.75

TABLE 5.- CONTINUED.

VEO-WING 1/10-SCALE RESEARCH MODEL,VSTOL TEST NO. 204

ALPHA	CL	CD	CPM	CLE2	CDE2	CME2	CLCT	CDCT	CMCT	NPR	CT	CTRF	THETAJ
RUN = 492													
-3.64	.3183	.0705	-.2572	.3183	.0705	-.2572	.3183	.0705	-.2572	1.0000	0.0000	0.0000	0.00
-2.03	.4426	.0740	-.1836	.4426	.0740	-.1836	.4426	.0740	-.1836	1.0000	0.0000	0.0000	0.00
-.04	.5765	.0863	-.1039	.5765	.0863	-.1039	.5765	.0863	-.1039	1.0000	0.0000	0.0000	0.00
1.96	.7500	.1041	-.0012	.7500	.1041	-.0012	.7500	.1041	-.0012	1.0000	0.0000	0.0000	0.00
4.06	.9016	.1374	.0704	.9016	.1374	.0704	.9016	.1374	.0704	1.0000	0.0000	0.0000	0.00
5.97	1.1038	.1760	.1953	1.1038	.1760	.1953	1.1038	.1760	.1953	1.0000	0.0000	0.0000	0.00
7.96	1.2730	.2281	.2945	1.2730	.2281	.2945	1.2730	.2281	.2945	1.0000	0.0000	0.0000	0.00
10.05	1.4577	.2978	.3986	1.4577	.2978	.3986	1.4577	.2978	.3986	1.0000	0.0000	0.0000	0.00
12.04	1.6031	.3772	.4978	1.6031	.3772	.4978	1.6031	.3772	.4978	1.0000	0.0000	0.0000	0.00
14.04	1.7261	.4558	.6100	1.7261	.4558	.6100	1.7261	.4558	.6100	1.0000	0.0000	0.0000	0.00
16.04	1.8498	.5469	.7080	1.8498	.5469	.7080	1.8498	.5469	.7080	1.0000	0.0000	0.0000	0.00
18.12	1.9606	.6436	.8139	1.9606	.6436	.8139	1.9606	.6436	.8139	1.0000	0.0000	0.0000	0.00
20.12	2.0613	.7445	.9274	2.0613	.7445	.9274	2.0613	.7445	.9274	1.0000	0.0000	0.0000	0.00
22.10	2.1666	.8583	1.0495	2.1666	.8583	1.0495	2.1666	.8583	1.0495	1.0000	0.0000	0.0000	0.00
24.13	2.2481	.9878	1.1476	2.2481	.9878	1.1476	2.2481	.9878	1.1476	1.0000	0.0000	0.0000	0.00
RUN = 494													
-3.69	.6095	-.4060	-.4630	.4702	.0770	-.3273	.6092	-.4049	-.4627	1.4319	.5011	.5026	19.78
-2.00	.7701	-.3968	-.3713	.6164	.0825	-.2354	.7696	-.3951	-.3708	1.4312	.5018	.5034	19.78
.07	.9903	-.3759	-.2603	.8187	.0990	-.1238	.9891	-.3725	-.2593	1.4365	.5037	.5050	19.79
1.98	1.1119	-.3454	-.1955	.9245	.1238	-.0590	1.1105	-.3418	-.1945	1.4357	.5039	.5052	19.79
3.98	1.3303	-.3071	-.0689	1.1260	.1568	.0680	1.3280	-.3020	-.0674	1.4366	.5055	.5069	19.79
6.05	1.5063	-.2500	.0283	1.2863	.2042	.1646	1.5049	-.2470	.0292	1.4357	.5033	.5047	19.79
8.05	1.6930	-.1903	.1297	1.4561	.2581	.2667	1.6903	-.1851	.1313	1.4375	.5058	.5071	19.80
10.07	1.8673	-.1054	.2354	1.6158	.3325	.3728	1.8654	-.1022	.2374	1.4368	.5037	.5050	19.80
12.00	2.0282	-.0167	.3341	1.7623	.4123	.4705	2.0264	-.0138	.3351	1.4347	.5034	.5048	19.79
14.03	2.2139	.0987	.4442	1.9326	.5185	.5807	2.2117	.1020	.4453	1.4357	.5040	.5054	19.79
16.04	2.3860	.2152	.5354	2.0892	.6262	.6724	2.3827	.2198	.5369	1.4352	.5055	.5069	19.79
18.13	2.5076	.3259	.6240	2.1948	.7274	.7615	2.5029	.3320	.6261	1.4376	.5077	.5090	19.80
22.03	2.7617	.5780	.8660	2.4198	.9600	1.0045	2.7540	.5865	.8691	1.4394	.5114	.5126	19.80
24.02	2.8182	.7066	.9559	2.4645	1.0750	1.0940	2.8116	.7135	.9585	1.4398	.5095	.5106	19.80

TABLE 5.- CONTINUED.

VEO-WING 1/10-SCALE RESEARCH MODEL, VSTOL TEST NO. 204

ALPHA	CL	CD	CPM	CLE2	CDE2	CME2	CLCT	CDCT	CMCT	NPR	CT	CTRF	THETAJ
RUN = 495													
-3.66	.7877	-.7449	-.6012	.4686	.1154	-.3241	.7783	-.7194	-.5930	1.8647	.9274	.9176	24.01
-2.06	.9732	-.7261	-.5220	.6298	.1263	-.2446	.9625	-.6996	-.5134	1.8621	.9288	.9189	24.00
-.05	1.1573	-.6980	-.4248	.7843	.1420	-.1474	1.1457	-.6718	-.4162	1.8620	.9290	.9191	24.00
1.98	1.3742	-.6599	-.3168	.9720	.1658	-.0395	1.3619	-.6347	-.3083	1.8618	.9284	.9185	24.00
3.97	1.5572	-.6112	-.2161	1.1260	.2005	.0614	1.5438	-.5859	-.2075	1.8632	.9289	.9190	24.00
6.01	1.7874	-.5503	-.1001	1.3264	.2477	.1782	1.7718	-.5233	-.0907	1.8634	.9315	.9213	24.01
8.10	1.9832	-.4680	.0025	1.4952	.3097	.2796	1.9685	-.4445	.0108	1.8628	.9280	.9181	24.00
9.99	2.1561	-.3825	.0943	1.6421	.3795	.3719	2.1401	-.3586	.1030	1.8646	.9291	.9192	24.01
12.00	2.3106	-.2803	.1981	1.7733	.4591	.4740	2.2967	-.2612	.2052	1.8637	.9238	.9140	24.01
14.01	2.5222	-.1526	.3198	1.9569	.5706	.5969	2.5053	-.1309	.3281	1.8628	.9278	.9179	24.00
16.05	2.7135	-.0179	.4139	2.1243	.6829	.6903	2.6973	.0014	.4215	1.8630	.9254	.9156	24.00
18.13	2.8791	.1183	.5206	2.2654	.7966	.7968	2.8627	.1363	.5280	1.8626	.9247	.9148	24.00
20.02	3.0254	.2533	.6252	2.3868	.9139	.9027	3.0056	.2737	.6338	1.8641	.9288	.9189	24.01
22.06	3.1202	.3949	.7263	2.4602	1.0308	1.0030	3.1014	.4130	.7342	1.8634	.9264	.9165	24.01
24.07	3.1543	.5303	.8278	2.4739	1.1415	1.1039	3.1362	.5465	.8351	1.8617	.9245	.9146	24.00
RUN = 496													
-3.63	1.1279	-1.2962	-.7929	.5314	.1170	-.3044	1.1154	-1.2666	-.7827	2.5363	1.5322	1.5340	26.51
-2.06	1.2874	-1.2661	-.7265	.6534	.1283	-.2386	1.2750	-1.2388	-.7169	2.5357	1.5300	1.5318	26.51
-.05	1.4771	-1.2262	-.6453	.7936	.1471	-.1568	1.4627	-1.1973	-.6350	2.5336	1.5323	1.5341	26.50
1.98	1.6907	-1.1851	-.5498	.9547	.1712	-.0584	1.6710	-1.1487	-.5366	2.5341	1.5413	1.5431	26.50
3.99	1.9153	-1.1190	-.4327	1.1355	.2050	.0566	1.8976	-1.0890	-.4217	2.5343	1.5348	1.5366	26.51
6.00	2.1392	-1.0497	-.3335	1.3103	.2512	.1577	2.1173	-1.0153	-.3205	2.5331	1.5407	1.5425	26.50
8.06	2.3725	-.9554	-.2135	1.5000	.3110	.2762	2.3520	-.9257	-.2020	2.5346	1.5361	1.5379	26.51
10.06	2.5689	-.8533	-.1106	1.6524	.3823	.3794	2.5471	-.8240	-.0990	2.5380	1.5365	1.5384	26.51
12.03	2.7677	-.7296	-.0037	1.8112	.4715	.4853	2.7467	-.7033	.0070	2.5344	1.5336	1.5354	26.51
14.10	2.9483	-.5925	.1011	1.9491	.5732	.5899	2.9264	-.5670	.1117	2.5332	1.5335	1.5353	26.50
15.99	3.1446	-.4489	.1377	2.1068	.6838	.6769	3.1213	-.4234	.1988	2.5326	1.5346	1.5363	26.50
18.04	3.3398	-.2957	.2976	2.2642	.7970	.7859	3.3177	-.2733	.3077	2.5345	1.5315	1.5333	26.51
20.02	3.5111	-.1371	.4078	2.3962	.9201	.8970	3.4858	-.1132	.4189	2.5324	1.5347	1.5365	26.50
22.05	3.6434	.0206	.5228	2.4846	1.0437	1.0151	3.6104	.0497	.5368	2.5362	1.5439	1.5458	26.51
24.06	3.6733	.1751	.6104	2.4885	1.1494	1.0988	3.6484	.1955	.6206	2.5328	1.5322	1.5339	26.50

TABLE 5.- CONTINUED.

VEO-WING 1/10-SCALE RESEARCH MODEL,VSTOL TEST NO. 204

ALPHA	CL	CD	CPM	CLE2	CDE2	CME2	CLCT	CDCT	CMCT	NPR	CT	CTRF	THETAJ
RUN = 497													
-3.62	1.2827	-1.7952	-.9877	.4834	.0978	-.3402	1.2688	-1.7623	-.9765	3.0836	2.0393	2.0543	26.51
-2.07	1.4857	-1.7572	-.8993	.6390	.1061	-.2543	1.4742	-1.7321	-.8906	3.0733	2.0274	2.0457	26.51
-.05	1.7161	-1.7081	-.8015	.8055	.1221	-.1574	1.7049	-1.6855	-.7936	3.0757	2.0250	2.0442	26.51
1.98	1.9260	-1.6482	-.7095	.9516	.1472	-.0659	1.9146	-1.6273	-.7020	3.0725	2.0236	2.0428	26.51
4.04	2.1503	-1.5809	-.6133	1.1109	.1807	.0312	2.1369	-1.5580	-.6049	3.0685	2.0263	2.0454	26.51
6.05	2.4314	-1.4854	-.4719	1.3373	.2281	.1687	2.4237	-1.4734	-.4674	3.0658	2.0141	2.0330	26.51
8.04	2.6523	-1.3978	-.3864	1.4937	.2851	.2574	2.6385	-1.3778	-.3787	3.0649	2.0242	2.0432	26.51
10.01	2.8780	-1.2800	-.2692	1.6668	.3562	.3722	2.8679	-1.2663	-.2638	3.0607	2.0169	2.0359	26.51
12.07	3.1018	-1.1517	-.1620	1.8257	.4483	.4829	3.0847	-1.1304	-.1534	3.0919	2.0270	2.0466	26.51
14.07	3.2927	-1.0158	-.0592	1.9554	.5453	.5887	3.2690	-.9880	-.0477	3.0968	2.0362	2.0559	26.51
16.01	3.5107	-.8565	.0232	2.1160	.6645	.6735	3.4803	-.8239	.0371	3.0959	2.0433	2.0636	26.51
18.00	3.7173	-.6868	.1271	2.2765	.7789	.7748	3.6921	-.6612	.1385	3.0947	2.0355	2.0552	26.51
20.07	3.9087	-.5041	.2415	2.4158	.9085	.8891	3.8826	-.4794	.2528	3.0921	2.0356	2.0553	26.51
22.06	4.0565	-.3339	.3606	2.5096	1.0312	1.0108	4.0237	-.3049	.3744	3.0927	2.0434	2.0631	26.51
24.09	4.0833	-.1790	.4466	2.4881	1.1315	1.0972	4.0484	-.1503	.4608	3.0924	2.0448	2.0645	26.51
RUN = 498													
8.02	1.2794	.2608	.2934	1.2794	.2608	.2934	1.2794	.2608	.2934	1.0000	0.0000	0.0000	0.00
8.04	1.3853	.1861	.2643	1.3255	.2753	.2989	1.4049	.1568	.2530	1.0475	.0753	.1074	25.31
8.05	1.5094	.0966	.2120	1.4056	.2692	.2719	1.5220	.0756	.2048	1.1362	.1783	.2014	22.96
8.05	1.6342	-.0966	.1694	1.4461	.2578	.2774	1.6372	-.1023	.1676	1.3307	.3937	.4012	19.90
8.04	1.8767	-.3826	.0198	1.4605	.3097	.2578	1.8683	-.3686	.0246	1.7441	.8165	.8078	22.97
8.07	2.1933	-.7115	-.1033	1.5035	.3209	.2835	2.1671	-.6723	-.0886	2.2100	1.2474	1.2405	25.60
8.04	2.4136	-1.0287	-.2610	1.4823	.3191	.2628	2.3949	-1.0017	-.2504	2.6468	1.6323	1.6332	26.60
8.01	2.6553	-1.3964	-.3909	1.4912	.2962	.2565	2.6354	-1.3675	-.3798	3.0875	2.0347	2.0343	26.51
8.01	3.3749	-2.3995	-.8228	1.4588	.3461	.2648	3.3677	-2.3892	-.8187	3.5346	3.3124	3.3481	26.90
8.04	4.3169	-3.7357	-1.3664	1.4510	.3698	.2567	4.2862	-3.6918	-1.3490	3.5106	4.9530	5.0068	26.88
RUN = 500													
-3.76	.3562	.0732	-.1459	.3562	.0732	-.1459	.3562	.0732	-.1459	1.0000	0.0000	0.0000	0.00
-1.91	.5172	.0773	-.0530	.5172	.0773	-.0530	.5172	.0773	-.0530	1.0000	0.0000	0.0000	0.00
-.03	.6606	.0947	.0332	.6606	.0947	.0332	.6606	.0947	.0332	1.0000	0.0000	0.0000	0.00
2.04	.8686	.1204	.1597	.8686	.1204	.1597	.8686	.1204	.1597	1.0000	0.0000	0.0000	0.00
4.03	1.0359	.1564	.2571	1.0359	.1564	.2571	1.0359	.1564	.2571	1.0000	0.0000	0.0000	0.00
6.09	1.2070	.2023	.3454	1.2070	.2023	.3454	1.2070	.2023	.3454	1.0000	0.0000	0.0000	0.00
8.03	1.3249	.2517	.4093	1.3249	.2517	.4093	1.3249	.2517	.4093	1.0000	0.0000	0.0000	0.00
10.06	1.4744	.3147	.5050	1.4744	.3147	.5050	1.4744	.3147	.5050	1.0000	0.0000	0.0000	0.00
12.13	1.6132	.3954	.5862	1.6132	.3954	.5862	1.6132	.3954	.5862	1.0000	0.0000	0.0000	0.00
14.03	1.7386	.4759	.6633	1.7386	.4759	.6633	1.7386	.4759	.6633	1.0000	0.0000	0.0000	0.00
16.14	1.9006	.5765	.8031	1.9006	.5765	.8031	1.9006	.5765	.8031	1.0000	0.0000	0.0000	0.00
18.06	1.9726	.6607	.8849	1.9726	.6607	.8849	1.9726	.6607	.8849	1.0000	0.0000	0.0000	0.00
20.16	2.0816	.7705	.9968	2.0816	.7705	.9968	2.0816	.7705	.9968	1.0000	0.0000	0.0000	0.00
22.10	2.1610	.8780	1.0826	2.1610	.8780	1.0826	2.1610	.8780	1.0826	1.0000	0.0000	0.0000	0.00
24.10	2.1895	1.0020	1.1348	2.1895	1.0020	1.1348	2.1895	1.0020	1.1348	1.0000	0.0000	0.0000	0.00

TABLE 5.- CONTINUED.

VEG-WING 1/10-SCALE RESEARCH MODEL, VSTOL TEST NO. 204

ALPHA	CL	CD	CPM	CLE2	CDE2	CME2	CLCT	CDCT	CMCT	NPR	CT	CTRF	THETAJ
RUN = 502													
-3.70	.6793	-.4003	-.3240	.5398	.0834	-.1881	.6788	-.3984	-.3235	1.4344	.5019	.5034	19.79
-2.00	.8890	-.4045	-.2339	.7290	.0927	-.0925	.8824	-.3837	-.2280	1.4519	.5218	.5223	19.84
-2.00	.8674	-.3990	-.2391	.7090	.0937	-.0992	.8622	-.3831	-.2346	1.4476	.5167	.5174	19.82
-.01	1.0280	-.3714	-.1612	.8523	.1163	-.0210	1.0220	-.3548	-.1564	1.4473	.5176	.5184	19.82
2.00	1.2250	-.3334	-.0515	1.0332	.1459	.0882	1.2193	-.3191	-.0473	1.4458	.5154	.5162	19.82
4.05	1.4461	-.2873	.0640	1.2364	.1868	.2042	1.4391	-.2713	.0687	1.4456	.5175	.5183	19.82
5.99	1.6001	-.2309	.1334	1.3751	.2345	.2732	1.5931	-.2164	.1378	1.4457	.5160	.5169	19.82
8.02	1.7815	-.1583	.2216	1.5415	.2961	.3605	1.7754	-.1468	.2251	1.4450	.5129	.5138	19.82
10.01	1.9826	-.0718	.3282	1.7263	.3753	.4677	1.9753	-.0592	.3322	1.4459	.5146	.5154	19.82
12.03	2.1564	.0248	.4306	1.8851	.4616	.5697	2.1493	.0361	.4343	1.4447	.5133	.5142	19.82
14.08	2.2822	.1232	.5205	1.9951	.5506	.6598	2.2744	.1349	.5243	1.4455	.5140	.5148	19.82
16.02	2.4022	.2296	.6052	2.1008	.6468	.7444	2.3941	.2408	.6090	1.4451	.5138	.5147	19.82
18.06	2.5438	.3505	.7163	2.2262	.7589	.8563	2.5335	.3536	.7208	1.4467	.5166	.5174	19.82
20.05	2.6763	.4779	.8271	2.3436	.8762	.9675	2.6646	.4919	.8320	1.4466	.5182	.5191	19.82
22.08	2.7514	.6025	.9081	2.4048	.9887	1.0485	2.7392	.6161	.9130	1.4492	.5193	.5190	19.83
24.09	2.7771	.7401	.9750	2.4166	1.1145	1.1156	2.7639	.7538	.9802	1.4487	.5190	.5197	19.83
RUN = 503													
-3.62	.8977	-.7403	-.4706	.5755	.1255	-.1915	.8860	-.7090	-.4605	1.8691	.9338	.9233	24.03
-2.06	1.0520	-.7194	-.4079	.7065	.1371	-.1289	1.0396	-.6887	-.3979	1.8672	.9335	.9235	24.02
-.03	1.3099	-.6904	-.2727	.9320	.1583	.0080	1.2942	-.6551	-.2610	1.8638	.9391	.9291	24.03
2.05	1.4930	-.6383	-.1786	1.0864	.1925	.1008	1.4773	-.6073	-.1682	1.8684	.9343	.9249	24.03
4.09	1.6742	-.5849	-.0934	1.2367	.2334	.1870	1.6565	-.5519	-.0820	1.8704	.9379	.9279	24.04
6.04	1.8409	-.5138	-.0149	1.3799	.2821	.2630	1.8262	-.4884	-.0060	1.8699	.9297	.9198	24.04
7.99	2.0434	-.4376	.0674	1.5539	.3448	.3462	2.0262	-.4101	.0772	1.8702	.9328	.9229	24.04
10.04	2.2538	-.3421	.1762	1.7364	.4227	.4553	2.2353	-.3148	.1862	1.8713	.9333	.9234	24.05
12.06	2.4464	-.2354	.2815	1.9017	.5118	.5610	2.4263	-.2077	.2919	1.8709	.9346	.9247	24.04
14.06	2.5973	-.1246	.3758	2.0260	.6040	.6556	2.5755	-.0967	.3865	1.8715	.9358	.9259	24.05
16.02	2.7257	-.0036	.4562	2.1326	.7018	.7347	2.7055	.0203	.4657	1.8699	.9315	.9217	24.04
18.13	2.8973	.1383	.5328	2.2761	.8241	.8624	2.8739	.1642	.5933	1.8703	.9352	.9253	24.04
20.08	3.0141	.2728	.6716	2.3696	.9377	.9513	2.9894	.2983	.6823	1.8681	.9359	.9259	24.03
22.11	3.1258	.4159	.7730	2.4548	1.0605	1.0541	3.0969	.4436	.7850	1.8704	.9404	.9305	24.04
24.12	3.1565	.5732	.8322	2.4690	1.1890	1.1110	3.1322	.5949	.8420	1.8687	.9330	.9231	24.03

TABLE 5.- CONTINUED.

VEO-WING 1/10-SCALE RESEARCH MODEL,VSTOL TEST NO. 204

ALPHA	CL	CD	CPM	CLE2	CDE2	CME2	CLCT	CDCT	CMCT	NPR	CT	CTRF	THETAJ
RUN = 504													
-3.58	1.1583	-1.2824	-.6876	.5612	.1299	-.1994	1.1460	-1.2533	-.6775	2.5322	1.5316	1.5334	26.50
-2.08	1.3254	-1.2465	-.6184	.6962	.1399	-.1341	1.3167	-1.2272	-.6117	2.5186	1.5211	1.5225	26.49
-.02	1.5596	-1.2050	-.5173	.8784	.1627	-.0310	1.5478	-1.1813	-.5089	2.5245	1.5264	1.5279	26.49
2.05	1.7948	-1.1542	-.4108	1.0601	.1963	.0786	1.7777	-1.1227	-.3994	2.5300	1.5357	1.5374	26.50
4.01	2.0133	-1.0857	-.3043	1.2327	.2386	.1851	1.9952	-1.0550	-.2930	2.5312	1.5355	1.5372	26.50
6.08	2.2426	-1.0014	-.2157	1.4177	.2894	.2720	2.2263	-.9759	-.2061	2.5294	1.5302	1.5318	26.50
7.96	2.4544	-.9166	-.1329	1.5852	.3498	.3562	2.4350	-.8893	-.1220	2.5326	1.5342	1.5360	26.50
10.13	2.6799	-.8011	-.0263	1.7644	.4305	.4623	2.6603	-.7747	-.0159	2.5314	1.5329	1.5346	26.50
12.08	2.8479	-.6812	.0592	1.8943	.5134	.5458	2.8313	-.6604	.0677	2.5304	1.5266	1.5283	26.50
14.01	2.9870	-.5623	.1388	1.9959	.5979	.6245	2.9712	-.5438	.1465	2.5282	1.5243	1.5259	26.50
16.16	3.2106	-.4146	.2657	2.1674	.7172	.7560	3.1853	-.3871	.2776	2.5374	1.5373	1.5392	26.51
18.11	3.3646	-.2667	.3719	2.2848	.8275	.8616	3.3397	-.2415	.3832	2.5379	1.5354	1.5373	26.51
20.03	3.5077	-.1174	.4708	2.3910	.9411	.9607	3.4809	-.0920	.4825	2.5337	1.5368	1.5386	26.50
22.06	3.5959	.0417	.5531	2.4462	1.0593	1.0478	3.5720	.0654	.5695	2.5337	1.5358	1.5376	26.50
24.10	3.6584	.2134	.6213	2.4703	1.1890	1.1110	3.6310	.2359	.6326	2.5372	1.5355	1.5374	26.51
RUN = 505													
-3.55	1.3943	-1.8384	-.8708	.5701	.1062	-.2047	1.3978	-1.8468	-.8736	3.1438	2.0910	2.1121	26.52
-1.95	1.6029	-1.7929	-.7930	.7300	.1171	-.1309	1.6116	-1.8118	-.7996	3.1270	2.0794	2.1001	26.51
.05	1.8398	-1.7237	-.6848	.9060	.1389	-.0266	1.8093	-1.6677	-.6633	3.1217	2.0675	2.0880	26.51
2.05	2.0786	-1.6677	-.5814	1.0767	.1726	.0791	2.0908	-1.6901	-.5895	3.1234	2.0747	2.0953	26.51
3.96	2.2783	-1.5835	-.4903	1.2195	.2109	.1678	2.2438	-1.5299	-.4688	3.1179	2.0674	2.0878	26.51
5.99	2.5523	-1.4950	-.3898	1.4324	.2630	.2672	2.5176	-1.4404	-.3694	3.1175	2.0640	2.0844	26.51
8.01	2.7943	-1.3888	-.3019	1.6124	.3297	.3556	2.7569	-1.3345	-.2811	3.1161	2.0654	2.0857	26.51
10.13	3.0321	-1.2635	-.2008	1.7875	.4100	.4566	2.9929	-1.2107	-.1800	3.1182	2.0651	2.0855	26.51
12.08	3.2256	-1.1230	-.1012	1.9308	.4945	.5532	3.1906	-1.0842	-.0835	3.1162	2.0555	2.0758	26.51
14.04	3.3920	-1.0002	-.0271	2.0363	.5844	.6303	3.3493	-.9503	-.0063	3.1163	2.0650	2.0854	26.51
16.07	3.5892	-.8369	.0783	2.1794	.6972	.7351	3.5460	-.7900	.0984	3.1179	2.0632	2.0835	26.51
18.09	3.7762	-.6638	.2045	2.3173	.8149	.8591	3.7360	-.6231	.2225	3.1173	2.0566	2.0769	26.51
20.10	3.9148	-.4949	.2895	2.4050	.9322	.9444	3.8728	-.4551	.3078	3.1162	2.0573	2.0776	26.51
22.06	4.0386	-.3275	.3835	2.4747	1.0527	1.0410	3.9890	-.2837	.4044	3.1172	2.0655	2.0859	26.51
24.14	4.1220	-.1328	.4562	2.5096	1.1894	1.1135	4.0713	-.0912	.4769	3.1160	2.0648	2.0852	26.51
RUN = 506													
8.02	1.3321	.2388	.3897	1.3321	.2388	.3897	1.3321	.2388	.3897	1.0000	0.0000	0.0000	0.00
8.05	1.4786	.2093	.3531	1.4154	.3041	.3895	1.4921	.1891	.3453	1.0534	.0824	.1139	25.63
8.06	1.6260	.1182	.3181	1.5186	.2985	.3801	1.6332	.1063	.3140	1.1444	.1875	.2098	22.73
8.06	1.7229	-.0655	.2486	1.5340	.2905	.3571	1.7249	-.0693	.2474	1.3338	.3957	.4030	19.89
8.10	1.9973	-.3464	.1185	1.5789	.3463	.3573	1.9881	-.3311	.1237	1.7495	.8180	.8093	23.04
8.03	2.2415	-.6734	-.0279	1.5630	.3488	.3543	2.2228	-.6452	-.0174	2.1980	1.2340	1.2269	25.55
8.05	2.5246	-.9908	-.1664	1.5933	.3568	.3574	2.5060	-.9639	-.1559	2.6471	1.6326	1.6381	26.60
8.07	2.7780	-1.3556	-.2941	1.6105	.3383	.3543	2.7565	-1.3243	-.2821	3.0911	2.0376	2.0572	26.51
8.04	3.4719	-2.3455	-.7377	1.5626	.3878	.3447	3.4728	-2.3468	-.7382	3.5278	3.2985	3.3341	26.89
8.02	4.4341	-3.6790	-1.2748	1.5822	.4109	.3412	4.4154	-3.6522	-1.2642	3.5076	4.9324	4.9860	26.87

TABLE 5.- CONTINUED.

VEO-WING 1/10-SCALE RESEARCH MODEL, VSTOL TEST NO. 204

ALPHA	CL	CD	CPM	CLE2	CDE2	CME2	CLCT	CDCT	CMCT	NPR	CT	CTRF	THETAJ
RUN = 507													
-3.76	.3195	.0693	-.2593	.3195	.0693	-.2593	.3195	.0693	-.2593	1.0000	0.0000	0.0000	0.00
-1.99	.4241	.0744	-.2005	.4241	.0744	-.2005	.4241	.0744	-.2005	1.0000	0.0000	0.0000	0.00
-.05	.5932	.0835	-.0920	.5932	.0835	-.0920	.5932	.0835	-.0920	1.0000	0.0000	0.0000	0.00
2.07	.7832	.1039	.0235	.7832	.1039	.0235	.7832	.1039	.0235	1.0000	0.0000	0.0000	0.00
4.01	.9669	.1354	.1113	.9669	.1354	.1113	.9669	.1354	.1113	1.0000	0.0000	0.0000	0.00
6.06	1.1368	.1782	.2192	1.1368	.1782	.2192	1.1368	.1782	.2192	1.0000	0.0000	0.0000	0.00
7.99	1.2348	.2189	.3028	1.2348	.2189	.3028	1.2348	.2189	.3028	1.0009	0.0000	0.0000	0.00
10.00	1.4675	.2959	.4098	1.4675	.2959	.4098	1.4675	.2959	.4098	1.0000	0.0000	0.0000	0.00
12.14	1.6288	.3778	.5219	1.6288	.3778	.5219	1.6288	.3778	.5219	1.0000	0.0000	0.0000	0.00
14.07	1.6976	.4551	.5876	1.6976	.4551	.5876	1.6976	.4551	.5876	1.0007	0.0000	0.0000	0.00
16.05	1.8239	.5444	.6901	1.8239	.5444	.6901	1.8239	.5444	.6901	1.0005	0.0000	0.0000	0.00
18.07	1.9221	.6326	.7973	1.9221	.6326	.7973	1.9221	.6326	.7973	1.0009	0.0000	0.0000	0.00
20.08	2.0260	.7357	.9134	2.0260	.7357	.9134	2.0260	.7357	.9134	1.0008	0.0000	0.0000	0.00
22.05	2.1022	.8435	1.0125	2.1022	.8435	1.0125	2.1022	.8435	1.0125	1.0000	0.0000	0.0000	0.00
24.07	2.1417	.9701	1.0832	2.1417	.9701	1.0832	2.1417	.9701	1.0832	1.0000	0.0000	0.0000	0.00
RUN = 508													
-3.72	.6156	-.4197	-.4656	.4753	.0673	-.3287	.5141	-.4144	-.4641	1.4370	.5055	.5068	19.80
-2.07	.7767	-.4073	-.3757	.6229	.0741	-.2392	.7755	-.4035	-.3746	1.4361	.5041	.5054	19.79
-.02	.9576	-.3858	-.2732	.7862	.0909	-.1414	.9558	-.3809	-.2768	1.4351	.5052	.5066	19.79
2.01	1.1291	-.3551	-.1859	.9408	.1158	-.0490	1.1270	-.3498	-.1844	1.4353	.5057	.5071	19.79
4.03	1.3284	-.3138	-.0682	1.1233	.1507	.0690	1.3258	-.3079	-.0664	1.4366	.5065	.5078	19.80
6.11	1.5220	-.2593	.0405	1.3004	.1967	.1775	1.5195	-.2542	.0421	1.4374	.5057	.5070	19.80
7.99	1.6824	-.2009	.1299	1.4463	.2473	.2668	1.6799	-.1962	.1313	1.4375	.5053	.5066	19.80
10.03	1.8048	-.1164	.2446	1.6331	.3226	.3812	1.8324	-.1124	.2458	1.4363	.5046	.5060	19.79
12.06	2.0606	-.0195	.3484	1.7927	.4117	.4855	2.0572	-.0141	.3501	1.4372	.5064	.5077	19.80
14.05	2.1532	.0794	.4245	1.8711	.5001	.5614	2.1503	.0838	.4259	1.4376	.5052	.5065	19.80
16.02	2.2457	.1783	.5032	1.9496	.5885	.6399	2.2430	.1820	.5045	1.4373	.5046	.5059	19.80
18.12	2.4225	.3082	.6210	2.1103	.7090	.7583	2.4183	.3136	.6229	1.4381	.5068	.5080	19.80
20.06	2.5246	.4237	.7154	2.1988	.8138	.8527	2.5201	.4291	.7173	1.4380	.5070	.5083	19.80
24.10	2.7233	.6910	.9278	2.3678	1.0603	1.0664	2.7153	.6993	.9310	1.4417	.5116	.5126	19.81

TABLE 5.- CONTINUED.

VEO-WING 1/10-SCALE RESEARCH MODEL, VSTOL TEST NO. 204

ALPHA	CL	CD	CPM	CLE2	CDE2	CME2	CLCT	CDCT	CMCT	NPR	CT	CTRF	THETAJ
RUN = 509													
-3.68	.7950	-.7516	-.6083	.4772	.1070	-.3319	.7862	-.7280	-.6007	1.8606	.9255	.9156	23.99
-1.99	.9878	-.7286	-.5089	.6467	.1162	-.2340	.9800	-.7094	-.5027	1.8570	.9210	.9111	23.97
-.05	1.1727	-.7077	-.4197	.7988	.1335	-.1417	1.1605	-.6802	-.4106	1.8646	.9304	.9205	24.01
2.06	1.3810	-.6705	-.3149	.9747	.1601	-.0357	1.3659	-.6397	-.3046	1.8641	.9346	.9247	24.01
3.99	1.5460	-.6178	-.2178	1.1162	.1908	.0587	1.5341	-.5955	-.2101	1.8625	.9256	.9157	24.00
6.08	1.7313	-.5532	-.1229	1.2722	.2391	.1536	1.7186	-.5314	-.1153	1.8639	.9255	.9157	24.01
7.98	1.9524	-.4851	-.0098	1.4655	.2943	.2677	1.9373	-.4609	-.0011	1.8634	.9289	.9190	24.01
10.01	2.1608	-.3915	.1056	1.6480	.3685	.3824	2.1460	-.3696	.1136	1.8629	.9268	.9169	24.00
12.01	2.3369	-.2842	.2151	1.7975	.4577	.4921	2.3211	-.2624	.2232	1.8644	.9272	.9173	24.01
14.03	2.4489	-.1733	.2929	1.8844	.5482	.5696	2.4331	-.1531	.3007	1.8649	.9259	.9161	24.01
16.04	2.5611	-.0599	.3825	1.9717	.6412	.6591	2.5447	-.0403	.3902	1.8645	.9258	.9159	24.01
18.12	2.7192	.0758	.4918	2.1033	.7566	.7690	2.7006	.0963	.5001	1.8644	.9279	.9180	24.01
20.04	2.8483	.2088	.5856	2.2095	.8693	.8631	2.8285	.2293	.5942	1.8626	.9288	.9189	24.00
22.06	2.9688	.3596	.6872	2.3088	.9956	.9640	2.9500	.3777	.6951	1.8634	.9264	.9166	24.01
24.07	3.0877	.5121	.7904	2.4050	1.1253	1.0674	3.0674	.5303	.7986	1.8629	.9275	.9176	24.00
RUN = 510													
-3.65	1.0878	-1.3030	-.8170	.4927	.1087	-.3292	1.0760	-1.2751	-.8074	2.5342	1.5302	1.5320	26.51
-2.06	1.2577	-1.2822	-.7486	.6207	.1193	-.2583	1.2421	-1.2479	-.7366	2.5361	1.5377	1.5395	26.51
-.02	1.4817	-1.2388	-.6356	.7979	.1340	-.1474	1.4674	-1.2100	-.6254	2.5288	1.5321	1.5337	26.50
2.01	1.6988	-1.1932	-.5395	.9637	.1598	-.0491	1.6807	-1.1598	-.5274	2.5375	1.5379	1.5398	26.51
3.99	1.9313	-1.1393	-.4326	1.1448	.1957	.0610	1.9072	-1.0984	-.4174	2.5403	1.5475	1.5495	26.51
5.99	2.1231	-1.0627	-.3319	1.2947	.2378	.1593	2.1016	-1.0289	-.3191	2.5367	1.5401	1.5420	26.51
8.08	2.3846	-.9713	-.2066	1.5076	.3004	.2854	2.3602	-.9359	-.1929	2.5374	1.5430	1.5449	26.51
10.00	2.5654	-.8672	-.1136	1.6495	.3700	.3766	2.5431	-.8370	-.1017	2.5360	1.5375	1.5394	26.51
12.04	2.7569	-.7471	-.0091	1.7967	.4581	.4817	2.7325	-.7165	.0034	2.5366	1.5391	1.5410	26.51
14.00	2.8945	-.6192	.0679	1.8940	.5521	.5585	2.8695	-.5898	.0802	2.5363	1.5385	1.5404	26.51
16.03	3.0061	-.4917	.1529	1.9663	.6414	.6427	2.9817	-.4651	.1644	2.5361	1.5360	1.5379	26.51
18.07	3.1618	-.3447	.2746	2.0815	.7516	.7648	3.1356	-.3180	.2865	2.5361	1.5374	1.5392	26.51
20.09	3.3210	-.1850	.3805	2.2058	.8701	.8693	3.2967	-.1619	.3911	2.5332	1.5335	1.5352	26.50
22.10	3.4736	-.0242	.4884	2.3172	.9951	.9793	3.4438	.0021	.5011	2.5348	1.5397	1.5415	26.51
24.16	3.5901	.1483	.5714	2.3975	1.1256	1.0624	3.5591	.1737	.5841	2.5358	1.5400	1.5419	26.51

TABLE 5.- CONTINUED.

VEO-WING 1/10-SCALE RESEARCH MODEL,VSTOL TEST NO. 204

ALPHA	CL	CD	CPM	CLE2	CDE2	CME2	CLCT	CDCT	CMCT	NPR	CT	CTRF	THETAJ
RUN = 511													
-3.64	1.2811	-1.8046	-.9843	.4840	.0850	-.3380	1.2689	-1.7757	-.9744	3.0994	2.0310	2.0507	26.51
-2.01	1.4790	-1.7668	-.9080	.6306	.0953	-.2632	1.4677	-1.7420	-.8994	3.0743	2.0270	2.0462	26.51
-.02	1.7088	-1.7136	-.8079	.7990	.1126	-.1650	1.6992	-1.6944	-.8011	3.0659	2.0213	2.0403	26.51
2.06	1.9376	-1.6572	-.7026	.9609	.1367	-.0590	1.9263	-1.6364	-.6952	3.0656	2.0236	2.0426	26.51
4.02	2.1816	-1.6414	-.6218	1.1133	.1695	.0413	2.1910	-1.6574	-.6276	3.1385	2.0817	2.1025	26.52
6.03	2.4604	-1.5569	-.4948	1.3286	.2166	.1685	2.4696	-1.5713	-.5003	3.1353	2.0830	2.1038	26.52
8.04	2.7125	-1.4564	-.3835	1.5186	.2772	.2802	2.7216	-1.4696	-.3885	3.1333	2.0841	2.1049	26.51
10.00	2.9027	-1.3329	-.2871	1.6596	.3464	.3717	2.8614	-1.2771	-.2652	3.1312	2.0688	2.0894	26.51
12.04	3.1163	-1.2030	-.1804	1.8110	.4350	.4800	3.1328	-1.2237	-.1888	3.1316	2.0739	2.0946	26.51
14.03	3.2550	-1.0667	-.1019	1.8921	.5268	.5592	3.2707	-1.0851	-.1095	3.1308	2.0761	2.0968	26.51
16.01	3.3986	-.9217	-.0027	1.9822	.6225	.6579	3.4158	-.9405	-.0108	3.1284	2.0747	2.0953	26.51
18.06	3.5575	-.7626	.0966	2.0876	.7294	.7570	3.5761	-.7814	.0883	3.1310	2.0737	2.0944	26.51
20.13	3.7182	-.5854	.1923	2.1959	.8522	.8524	3.7379	-.6040	.1837	3.1286	2.0732	2.0938	26.51
22.03	3.8803	-.4180	.2883	2.3064	.9723	.9504	3.8960	-.4318	.2817	3.1283	2.0794	2.1000	26.51
24.08	4.0516	-.2116	.4058	2.4339	1.1174	1.0659	4.0727	-.2289	.3972	3.1284	2.0730	2.0936	26.51
RUN = 512													
-3.84	.2058	.0995	-.2527	.2058	.0995	-.2527	.2058	.0995	-.2527	1.0000	0.0000	0.0000	0.00
-2.08	.3655	.0905	-.1676	.3655	.0905	-.1676	.3655	.0905	-.1676	1.0000	0.0000	0.0000	0.00
.07	.5345	.0939	-.0868	.5345	.0939	-.0868	.5345	.0939	-.0868	1.0000	0.0000	0.0000	0.00
1.96	.6917	.1035	-.0110	.6917	.1035	-.0110	.6917	.1035	-.0110	1.0000	0.0000	0.0000	0.00
4.01	.8579	.1297	.0589	.8579	.1297	.0589	.8579	.1297	.0589	1.0000	0.0000	0.0000	0.00
6.02	1.0775	.1631	.1840	1.0775	.1631	.1840	1.0775	.1631	.1840	1.0000	0.0000	0.0000	0.00
7.98	1.1714	.1981	.2708	1.1714	.1981	.2708	1.1714	.1981	.2708	1.0000	0.0000	0.0000	0.00
10.05	1.3956	.2579	.3874	1.3956	.2579	.3874	1.3956	.2579	.3874	1.0000	0.0000	0.0000	0.00
8.08	1.2236	.2026	.3015	1.2236	.2026	.3015	1.2236	.2026	.3015	1.0000	0.0000	0.0000	0.00
12.06	1.5704	.3192	.4988	1.5704	.3192	.4988	1.5704	.3192	.4988	1.0000	0.0000	0.0000	0.00
14.04	1.6835	.3821	.5969	1.6835	.3821	.5969	1.6835	.3821	.5969	1.0000	0.0000	0.0000	0.00
16.12	1.7863	.4557	.6854	1.7863	.4557	.6854	1.7863	.4557	.6854	1.0000	0.0000	0.0000	0.00
18.12	1.8860	.5355	.7890	1.8860	.5355	.7890	1.8860	.5355	.7890	1.0000	0.0000	0.0000	0.00
20.12	1.9990	.6310	.8842	1.9990	.6310	.8842	1.9990	.6310	.8842	1.0000	0.0000	0.0000	0.00
22.11	2.1251	.7438	.9933	2.1251	.7438	.9933	2.1251	.7438	.9933	1.0000	0.0000	0.0000	0.00
24.16	2.2087	.8675	1.0831	2.2087	.8675	1.0831	2.2087	.8675	1.0831	1.0000	0.0000	0.0000	0.00

TABLE 5.- CONTINUED.

VEO-WING 1/10-SCALE RESEARCH MODEL,VSTOL TEST NO. 204

ALPHA	CL	CD	CPM	CLE2	CDE2	CME2	CLCT	CDCT	CMCT	NPR	CT	CTRF	THETAJ
RUN = 513													
-3.77	.5240	-.3952	-.4354	.3824	.0971	-.2969	.5209	-.3842	-.4324	1.4451	.5113	.5122	19.82
-2.03	.6822	-.3869	-.3633	.5283	.0936	-.2270	.6812	-.3838	-.3624	1.4369	.5032	.5045	19.80
.01	.8858	-.3768	-.2828	.7141	.0998	-.1459	.8840	-.3718	-.2813	1.4371	.5053	.5066	19.80
1.96	1.0592	-.3520	-.2119	.8710	.1196	-.0747	1.0568	-.3460	-.2101	1.4366	.5064	.5078	19.79
4.09	1.2934	-.3175	-.0960	1.0878	.1469	.0412	1.2908	-.3114	-.0943	1.4366	.5066	.5079	19.79
6.11	1.4774	-.2742	.0172	1.2555	.1827	.1545	1.4745	-.2682	.0190	1.4373	.5067	.5080	19.80
8.02	1.6378	-.2258	.1220	1.4013	.2224	.2589	1.6352	-.2210	.1235	1.4374	.5055	.5068	19.80
10.02	1.8201	-.1633	.2259	1.5676	.2773	.3631	1.8169	-.1576	.2277	1.4364	.5065	.5079	19.79
12.05	2.0003	-.0867	.3370	1.7332	.3434	.4738	1.9977	-.0825	.3383	1.4370	.5050	.5063	19.80
14.01	2.2262	.0096	.4480	1.9434	.4317	.5853	2.2223	.0153	.4499	1.4378	.5069	.5081	19.80
16.09	2.3584	.1119	.5135	2.0604	.5238	.6508	2.3542	.1176	.5154	1.4373	.5071	.5084	19.80
18.06	2.4787	.2195	.6029	2.1655	.6224	.7408	2.4731	.2267	.6053	1.4390	.5091	.5103	19.80
20.06	2.6058	.3453	.7107	2.2779	.7380	.8489	2.5991	.3533	.7135	1.4396	.5104	.5116	19.80
22.08	2.7302	.4816	.8267	2.3891	.8621	.9648	2.7236	.4890	.8294	1.4397	.5099	.5110	19.80
24.11	2.8216	.6172	.9339	2.4681	.9843	1.0716	2.8156	.6233	.9362	1.4406	.5086	.5097	19.80
RUN = 514													
-3.70	.7072	-.7276	-.5822	.3878	.1352	-.3043	.6970	-.6998	-.5732	1.8668	.9300	.9201	24.02
-2.07	.8489	-.7166	-.5294	.5045	.1381	-.2511	.8374	-.6878	-.5200	1.8670	.9314	.9214	24.02
-.08	1.0840	-.7031	-.4424	.7073	.1445	-.1622	1.0689	-.6692	-.4312	1.8700	.9375	.9275	24.04
1.96	1.2960	-.6690	-.3522	.8914	.1610	-.0732	1.2816	-.6394	-.3422	1.8678	.9333	.9234	24.03
4.03	1.5517	-.6278	-.2278	1.1178	.1863	.0508	1.5366	-.5995	-.2181	1.8679	.9324	.9225	24.03
5.97	1.7312	-.5786	-.1350	1.2687	.2224	.1444	1.7139	-.5488	-.1246	1.8684	.9348	.9249	24.03
8.07	1.9139	-.5121	-.0300	1.4238	.2693	.2487	1.8969	-.4850	-.0203	1.8682	.9323	.9224	24.03
10.02	2.0756	-.4422	.0715	1.5597	.3211	.3498	2.0583	-.4167	.0808	1.8692	.9311	.9212	24.03
12.14	2.2840	-.3545	.1949	1.7404	.3891	.4731	2.2659	-.3297	.2041	1.8683	.9310	.9211	24.03
14.04	2.4667	-.2588	.2871	1.8993	.4658	.5651	2.4483	-.2353	.2961	1.8666	.9302	.9203	24.02
16.02	2.6724	-.1354	.3546	2.0782	.5715	.6336	2.6512	-.1101	.3646	1.8678	.9334	.9235	24.03
18.06	2.8303	.0014	.4572	2.2130	.6851	.7354	2.8097	.0242	.4665	1.8662	.9311	.9212	24.02
20.07	2.9784	.1468	.5702	2.3353	.8103	.8493	2.9550	.1709	.5803	1.8683	.9339	.9240	24.03
22.10	3.0964	.2917	.6832	2.4308	.9317	.9622	3.0727	.3145	.6932	1.8676	.9333	.9234	24.03
24.13	3.2013	.4438	.7882	2.5127	1.0605	1.0674	3.1760	.4665	.7985	1.8669	.9343	.9244	24.02

TABLE 5.- CONTINUED.

VEO-WING 1/10-SCALE RESEARCH MODEL, VSTOL TEST NO. 204

ALPHA	CL	CD	CPM	CLE2	CDE2	CME2	CLCT	CDCT	CMCT	NPR	CT	CTRF	THETAJ
RUN = 515													
-3.68	.9445	-1.2753	-.8320	.3474	.1432	-.3418	.9301	-1.2410	-.8201	2.5380	1.5372	1.5391	26.51
-2.10	1.1472	-1.2558	-.7443	.5149	.1382	-.2570	1.1351	-1.2292	-.7350	2.5276	1.5292	1.5308	26.50
-.02	1.4116	-1.2314	-.6599	.7264	.1439	-.1708	1.3960	-1.2001	-.6488	2.5290	1.5349	1.5365	26.50
2.03	1.6432	-1.1898	-.5737	.9087	.1611	-.0841	1.6260	-1.1582	-.5622	2.5306	1.5360	1.5377	26.50
6.04	2.0900	-1.0645	-.3545	1.2671	.2252	.1326	2.0748	-1.0407	-.3455	2.5308	1.5282	1.5299	26.50
8.04	2.2745	-.9916	-.2582	1.4047	.2721	.2302	2.2561	-.9649	-.2479	2.5330	1.5324	1.5341	26.50
9.95	2.4882	-.9127	-.1399	1.5766	.3215	.3486	2.4688	-.8864	-.1294	2.5298	1.5327	1.5344	26.50
12.03	2.7064	-.8130	-.0159	1.7509	.3870	.4725	2.6863	-.7877	-.0056	2.5308	1.5323	1.5340	26.50
14.02	2.8899	-.6975	.0661	1.8937	.4681	.5542	2.8693	-.6734	.0762	2.5296	1.5316	1.5333	26.50
15.97	3.1405	-.5571	.1601	2.1062	.5729	.6479	3.1201	-.5348	.1698	2.5306	1.5303	1.5320	26.50
18.06	3.3287	-.3983	.2689	2.2528	.6942	.7571	3.3065	-.3757	.2790	2.5290	1.5317	1.5333	26.50
20.11	3.4630	-.2396	.3520	2.3457	.8162	.8414	3.4371	-.2152	.3633	2.5312	1.5355	1.5372	26.50
22.17	3.5948	-.0640	.4752	2.4431	.9488	.9635	3.5708	-.0429	.4853	2.5314	1.5319	1.5336	26.50
24.19	3.7131	.1024	.5808	2.5272	1.0734	1.0687	3.6890	.1221	.5907	2.5276	1.5311	1.5327	26.50
RUN = 516													
-3.64	1.1791	-1.7733	-.9796	.3817	.1172	-.3320	1.1664	-1.7433	-.9683	3.0894	2.0322	2.0518	26.51
-2.04	1.3360	-1.7336	-.9238	.4931	.1187	-.2825	1.3294	-1.7189	-.9187	3.0755	2.0160	2.0351	26.51
.04	1.6440	-1.7068	-.8203	.7307	.1211	-.1765	1.6330	-1.6349	-.8126	3.0659	2.0243	2.0433	26.51
2.04	1.8750	-1.6432	-.7271	.9064	.1373	-.0884	1.8711	-1.6360	-.7245	3.0590	2.0082	2.0269	26.51
4.06	2.1131	-1.5806	-.6338	1.0827	.1638	.0046	2.1093	-1.5742	-.6314	3.0515	2.0074	2.0260	26.51
6.12	2.4075	-1.5522	-.5282	1.2821	.2053	.1297	2.3712	-1.4956	-.5070	3.1211	2.0666	2.0870	26.51
8.04	2.5867	-1.4689	-.4484	1.4041	.2483	.2089	2.5496	-1.4151	-.4278	3.1155	2.0647	2.0850	26.51
10.01	2.8195	-1.3693	-.3231	1.5827	.3008	.3319	2.7846	-1.3221	-.3046	3.1088	2.0581	2.0782	26.51
12.06	3.0347	-1.2638	-.2116	1.7365	.3641	.4447	2.9957	-1.2149	-.1918	3.1107	2.0620	2.0822	26.51
14.07	3.2593	-1.1264	-.1046	1.9119	.4469	.5483	3.2256	-1.0870	-.0882	3.1067	2.0514	2.0714	26.51
16.11	3.5180	-.9720	-.0158	2.1132	.5545	.6381	3.4808	-.9315	.0016	3.1069	2.0545	2.0746	26.51
18.13	3.7055	-.8040	.0701	2.2498	.6699	.7229	3.6689	-.7670	.0865	3.1046	2.0515	2.0715	26.51
20.15	3.8752	-.6164	.1902	2.3686	.8054	.8431	3.8373	-.5807	.2067	3.1029	2.0516	2.0716	26.51
22.19	4.0397	-.4281	.3029	2.4805	.9419	.9571	3.9975	-.3911	.3206	3.1044	2.0556	2.0757	26.51
24.07	4.1555	-.2564	.4017	2.5515	1.0622	1.0560	4.1115	-.2202	.4196	3.1020	2.0563	2.0763	26.51

TABLE 5.- CONTINUED.

VEO-WING 1/10-SCALE RESEARCH MODEL,VSTOL TEST NO. 204

ALPHA	CL	CD	CPM	CLE2	CDE2	CME2	CLCT	CDCT	CMCT	NPR	CT	CTRF	THETAJ
RUN = 517													
-3.72	.5800	-.3553	-.2239	.4389	.1341	-.0862	.5777	-.3474	-.2216	1.4389	.5082	.5094	19.80
-2.10	.7455	-.3479	-.1421	.5906	.1374	-.0045	.7430	-.3402	-.1399	1.4380	.5081	.5094	19.80
-.00	.9584	-.3176	-.0454	.7861	.1611	.0921	.9558	-.3105	-.0433	1.4382	.5075	.5087	19.80
2.03	1.1400	-.2766	.0433	.9505	.1965	.1810	1.1369	-.2688	.0456	1.4378	.5084	.5097	19.80
3.95	1.2993	-.2294	.1428	1.0945	.2359	.2802	1.2964	-.2228	.1447	1.4396	.5072	.5084	19.80
6.04	1.4687	-.1652	.2444	1.2480	.2907	.3812	1.4665	-.1605	.2458	1.4382	.5052	.5065	19.80
8.02	1.6260	-.0964	.3378	1.3898	.3513	.4745	1.6237	-.0921	.3391	1.4372	.5049	.5062	19.80
10.11	1.7913	-.0254	.4332	1.5385	.4142	.5752	1.7884	-.0203	.4397	1.4385	.5058	.5070	19.80
12.07	1.9326	.0267	.5018	1.6660	.4556	.6382	1.9307	.0299	.5028	1.4374	.5037	.5050	19.80
14.07	2.1027	.0847	.5530	1.8182	.5085	.6909	2.0975	.0924	.5555	1.4406	.5093	.5104	19.80
16.11	2.2947	.1943	.6324	1.9954	.6077	.7703	2.2893	.2018	.6349	1.4393	.5092	.5104	19.80
18.04	2.4131	.2990	.7051	2.0990	.7032	.8435	2.4065	.3075	.7080	1.4405	.5108	.5119	19.80
20.09	2.5584	.4397	.8239	2.2294	.8332	.9625	2.5508	.4488	.8271	1.4416	.5118	.5129	19.81
22.19	2.6691	.5837	.9146	2.3264	.9644	1.0531	2.6617	.5920	.9177	1.4410	.5111	.5122	19.81
24.10	2.7557	.7185	.9883	2.4003	1.0878	1.1269	2.7477	.7267	.9914	1.4412	.5115	.5126	19.81
RUN = 518													
-3.64	.7566	-.6880	-.3810	.4349	.1765	-.1022	.7454	-.6580	-.3713	1.8722	.9324	.9225	24.05
-2.04	.9385	-.6702	-.2946	.5943	.1828	-.0168	.9275	-.6429	-.2857	1.8651	.9298	.9199	24.01
-.08	1.1744	-.6395	-.2080	.8000	.2041	.0707	1.1612	-.6098	-.1982	1.8653	.9329	.9229	24.02
2.02	1.3745	-.5865	-.1087	.9709	.2396	.1689	1.3618	-.5604	-.1000	1.8649	.9294	.9195	24.01
4.05	1.5419	-.5247	-.0131	1.1089	.2873	.2648	1.5278	-.4984	-.0041	1.8655	.9302	.9203	24.02
6.00	1.7509	-.4578	.1085	1.2894	.3413	.3871	1.7347	-.4298	.1182	1.8639	.9327	.9228	24.01
8.04	1.8975	-.3807	.1924	1.4086	.4000	.4706	1.8812	-.3547	.2017	1.8654	.9310	.9211	24.02
10.12	2.0609	-.2951	.2889	1.5468	.4632	.5656	2.0465	-.2738	.2967	1.8658	.9260	.9161	24.02
11.99	2.2113	-.2308	.3479	1.6731	.5098	.6243	2.1966	-.2106	.3554	1.8651	.9253	.9155	24.01
16.03	2.5858	-.0529	.4784	1.9910	.6542	.7576	2.5642	-.0272	.4885	1.8708	.9339	.9240	24.04
18.08	2.7818	.0803	.5725	2.1581	.7701	.8535	2.7553	.1097	.5844	1.8714	.9400	.9300	24.05
20.12	2.9071	.2271	.6708	2.2613	.8921	.9509	2.8817	.2533	.6818	1.8708	.9369	.9269	24.04
22.04	3.0303	.3810	.7731	2.3633	1.0232	1.0529	3.0048	.4056	.7838	1.8719	.9358	.9259	24.05
24.07	3.1420	.5431	.8575	2.4519	1.1620	1.1376	3.1148	.5675	.8685	1.8718	.9369	.9269	24.05

TABLE 5.- CONTINUED.

VEO-WING 1/10-SCALE RESEARCH MODEL, VSTOL TEST NO. 204

ALPHA	CL	CD	CPM	CLE2	CDE2	CME2	CLCT	CDCT	CMCT	NPR	CT	CTRF	THETAJ
RUN = 519													
-3.59	1.0509	-1.2488	-.6003	.4466	.1797	-.1060	1.0319	-1.2038	-.5847	2.5479	1.5488	1.5511	26.52
-2.08	1.2799	-1.2199	-.5030	.6423	.1839	-.0119	1.2634	-1.1836	-.4903	2.5389	1.5399	1.5418	26.51
.03	1.4900	-1.1731	-.4275	.7996	.2094	.0646	1.4706	-1.1342	-.4137	2.5358	1.5435	1.5453	26.51
2.01	1.6898	-1.1132	-.3451	.9526	.2434	.1467	1.6697	-1.0762	-.3316	2.5364	1.5421	1.5440	26.51
4.07	1.9060	-1.0360	-.2357	1.1214	.2918	.2555	1.8854	-1.0012	-.2228	2.5367	1.5404	1.5423	26.51
6.01	2.0917	-.9508	-.1264	1.2672	.3426	.3621	2.0745	-.9238	-.1162	2.5371	1.5319	1.5338	26.51
7.99	2.2818	-.8646	-.0285	1.4102	.4035	.4616	2.2609	-.8341	-.0167	2.5357	1.5370	1.5388	26.51
10.02	2.4753	-.7689	.0743	1.5606	.4661	.5638	2.4544	-.7407	.0855	2.5371	1.5350	1.5369	26.51
12.00	2.6381	-.6842	.1395	1.6811	.5186	.6290	2.6162	-.6566	.1507	2.5372	1.5352	1.5370	26.51
12.07	2.6388	-.6742	.1479	1.6865	.5202	.6342	2.6226	-.6539	.1562	2.5297	1.5260	1.5276	26.50
14.19	2.8671	-.5874	.2110	1.8692	.5731	.6984	2.8484	-.5656	.2202	2.5343	1.5288	1.5306	26.51
16.10	3.0619	-.4718	.2805	2.0202	.6608	.7705	3.0368	-.4445	.2923	2.5343	1.5370	1.5388	26.51
18.08	3.2476	-.3222	.3698	2.1686	.7725	.8593	3.2228	-.2971	.3810	2.5347	1.5352	1.5370	26.51
20.10	3.3981	-.1634	.4591	2.2781	.8953	.9499	3.3695	-.1363	.4716	2.5362	1.5393	1.5412	26.51
22.08	3.5473	.0111	.5662	2.3882	1.0336	1.0584	3.5144	.0401	.5802	2.5344	1.5439	1.5457	26.51
24.16	3.6565	.1940	.6551	2.4648	1.1704	1.1457	3.6264	.2186	.6675	2.5356	1.5389	1.5407	26.51
RUN = 520													
-3.56	1.2719	-1.7920	-.7821	.4443	.1611	-.1128	1.2720	-1.7922	-.7821	3.1592	2.0999	2.1213	26.52
-1.98	1.4908	-1.7482	-.6949	.6178	.1644	-.0319	1.4986	-1.7652	-.7008	3.1402	2.0815	2.1024	26.52
-.04	1.7363	-1.6957	-.6179	.7990	.1863	.0451	1.7446	-1.7123	-.6238	3.1389	2.0816	2.1025	26.52
2.01	1.9479	-1.6319	-.5403	.9412	.2203	.1245	1.9541	-1.6433	-.5444	3.1375	2.0872	2.1081	26.52
4.02	2.2167	-1.5447	-.4021	1.1483	.2668	.2610	2.2258	-1.5601	-.4077	3.1323	2.0823	2.1031	26.51
6.00	2.4355	-1.4398	-.2816	1.3108	.3249	.3782	2.4507	-1.4636	-.2905	3.1301	2.0720	2.0927	26.51
7.98	2.6319	-1.3402	-.1887	1.4452	.3867	.4719	2.6464	-1.3612	-.1968	3.1293	2.0747	2.0954	26.51
10.02	2.8153	-1.2477	-.1099	1.5621	.4440	.5538	2.8246	-1.2602	-.1148	3.1283	2.0846	2.1053	26.51
12.02	3.0073	-1.1385	-.0278	1.7053	.4963	.6311	2.9637	-1.0837	-.0057	3.1272	2.0693	2.0899	26.51
14.03	3.2361	-1.0310	.0319	1.8766	.5580	.6912	3.2554	-1.0536	.0226	3.1277	2.0706	2.0912	26.51
16.03	3.4356	-.8926	.1007	2.0247	.6448	.7586	3.3904	-.8434	.1218	3.1289	2.0662	2.0867	26.51
18.05	3.6365	-.7314	.1855	2.1729	.7545	.8431	3.5903	-.6846	.2062	3.1323	2.0651	2.0857	26.51
20.09	3.8306	-.5448	.2986	2.3173	.8863	.9553	3.7849	-.5015	.3185	3.1271	2.0623	2.0828	26.51
22.11	3.9824	-.3658	.3798	2.4083	1.0207	1.0411	3.9999	-.3811	.3724	3.1271	2.0770	2.0976	26.51
24.21	4.1336	-.1638	.4746	2.5018	1.1708	1.1392	4.1435	-.1719	.4705	3.1275	2.0874	2.1081	26.51

TABLE 5.- CONTINUED.

VEO-WING 1/10-SCALE RESEARCH MODEL,VSTOL TEST NO. 204

ALPHA	CL	CD	CPM	CLE2	CDE2	CME2	CLCT	CDCT	CMCT	NPR	CT	CTRF	THETAJ
RUN = 521													
-3.77	.2875	.1294	-.0286	.2875	.1294	-.0286	.2875	.1294	-.0286	1.0000	0.0000	0.0000	0.00
-2.01	.4467	.1315	.0648	.4467	.1315	.0648	.4467	.1315	.0648	1.0000	0.0000	0.0000	0.00
.00	.5810	.1476	.1304	.5810	.1476	.1304	.5810	.1476	.1304	1.0000	0.0000	0.0000	0.00
2.04	.7563	.1757	.2263	.7563	.1757	.2263	.7563	.1757	.2263	1.0000	0.0000	0.0000	0.00
4.06	.9210	.2168	.3147	.9210	.2168	.3147	.9210	.2168	.3147	1.0000	0.0000	0.0000	0.00
6.02	1.0890	.2607	.4201	1.0890	.2607	.4201	1.0890	.2607	.4201	1.0000	0.0000	0.0000	0.00
10.04	1.3690	.3744	.5868	1.3690	.3744	.5868	1.3690	.3744	.5868	1.0000	0.0000	0.0000	0.00
12.04	1.5109	.3973	.6331	1.5109	.3973	.6331	1.5109	.3973	.6331	1.0000	0.0000	0.0000	0.00
14.05	1.6283	.4646	.6973	1.6283	.4646	.6973	1.6283	.4646	.6973	1.0000	0.0000	0.0000	0.00
16.07	1.7909	.5488	.7939	1.7909	.5488	.7939	1.7909	.5488	.7939	1.0000	0.0000	0.0000	0.00
18.06	1.8847	.6384	.8909	1.8847	.6384	.8909	1.8847	.6384	.8909	1.0000	0.0000	0.0000	0.00
20.07	1.9726	.7409	.9804	1.9726	.7409	.9804	1.9726	.7409	.9804	1.0000	0.0000	0.0000	0.00
22.07	2.0860	.8664	1.0739	2.0860	.8664	1.0739	2.0860	.8664	1.0739	1.0000	0.0000	0.0000	0.00
24.13	2.1832	1.0051	1.1480	2.1832	1.0051	1.1480	2.1832	1.0051	1.1480	1.0000	0.0000	0.0000	0.00
8.06	1.2237	.3249	.4917	1.2237	.3249	.4917	1.2237	.3249	.4917	1.0000	0.0000	0.0000	0.00
RUN = 522													
-3.71	.2698	.1319	-.0332	.2698	.1319	-.0332	.2698	.1319	-.0332	1.0000	0.0000	0.0000	0.00
-2.02	.3921	.1319	.0337	.3921	.1319	.0337	.3921	.1319	.0337	1.0000	0.0000	0.0000	0.00
.05	.5832	.1420	.1348	.5832	.1420	.1348	.5832	.1420	.1348	1.0000	0.0000	0.0000	0.00
1.98	.7235	.1645	.2166	.7235	.1645	.2166	.7235	.1645	.2166	1.0000	0.0000	0.0000	0.00
3.98	.9121	.2033	.3172	.9121	.2033	.3172	.9121	.2033	.3172	1.0000	0.0000	0.0000	0.00
6.00	1.0706	.2454	.4095	1.0706	.2454	.4095	1.0706	.2454	.4095	1.0000	0.0000	0.0000	0.00
8.05	1.1953	.3012	.4909	1.1953	.3012	.4909	1.1953	.3012	.4909	1.0000	0.0000	0.0000	0.00
9.99	1.3411	.3569	.5818	1.3411	.3569	.5818	1.3411	.3569	.5818	1.0000	0.0000	0.0000	0.00
12.03	1.5035	.3922	.6380	1.5035	.3922	.6380	1.5035	.3922	.6380	1.0000	0.0000	0.0000	0.00
13.99	1.6427	.4471	.7082	1.6427	.4471	.7082	1.6427	.4471	.7082	1.0000	0.0000	0.0000	0.00
16.06	1.7982	.5291	.8034	1.7982	.5291	.8034	1.7982	.5291	.8034	1.0000	0.0000	0.0000	0.00
18.02	1.8744	.6139	.8885	1.8744	.6139	.8885	1.8744	.6139	.8885	1.0005	0.0000	0.0000	0.00
20.02	1.9772	.7208	.9897	1.9772	.7208	.9897	1.9772	.7208	.9897	1.0005	0.0000	0.0000	0.00
21.96	2.1015	.8471	1.0823	2.1015	.8471	1.0823	2.1015	.8471	1.0823	1.0000	0.0000	0.0000	0.00
24.01	2.1616	.9649	1.1448	2.1616	.9649	1.1448	2.1616	.9649	1.1448	1.0000	0.0000	0.0000	0.00

TABLE 5.- CONTINUED.

VEO-WING 1/10-SCALE RESEARCH MODEL, VSTOL TEST NO. 204

ALPHA	CL	CD	CPM	CLE2	CDE2	CME2	CLCT	CDCT	CMCT	NPR	CT	CTRF	THETAJ
RUN = 523													
-3.62	.7479	-.6597	-.3390	.4341	.1868	-.0667	.7436	-.6481	-.3353	1.8535	.9125	.9027	23.96
-1.97	.9395	-.6569	-.2540	.5980	.1876	.0209	.9318	-.6378	-.2478	1.8599	.9208	.9110	23.99
.02	1.1349	-.6290	-.1832	.7626	.2063	.0928	1.1251	-.6070	-.1760	1.8626	.9243	.9145	24.00
1.97	1.3899	-.5830	-.0587	.9908	.2365	.2165	1.3807	-.5640	-.0523	1.8617	.9214	.9115	24.00
4.03	1.5562	-.5229	.0252	1.1262	.2846	.3015	1.5447	-.5013	.0326	1.8637	.9248	.9149	24.01
5.99	1.7181	-.4557	.1196	1.2625	.3338	.3948	1.7076	-.4374	.1260	1.8615	.9214	.9116	24.00
7.97	1.8925	-.3833	.2171	1.4077	.3931	.4935	1.8793	-.3622	.2246	1.8633	.9252	.9153	24.01
10.02	2.0440	-.3025	.3043	1.5333	.4540	.5798	2.0316	-.2840	.3110	1.8638	.9225	.9127	24.01
12.08	2.2119	-.2163	.3829	1.6783	.5160	.6564	2.2027	-.2037	.3876	1.8623	.9158	.9061	24.00
13.97	2.4079	-.1660	.4451	1.8459	.5539	.7209	2.3938	-.1480	.4520	1.8634	.9232	.9133	24.01
15.94	2.5564	-.0649	.5056	1.9688	.6368	.7829	2.5404	-.0459	.5141	1.8622	.9251	.9153	24.00
17.95	2.7565	.0692	.6149	2.1465	.7476	.8903	2.7419	.0855	.6215	1.8637	.9221	.9123	24.01
20.03	2.8890	.2146	.7090	2.2541	.8712	.9848	2.8730	.2311	.7159	1.8643	.9233	.9134	24.01
21.97	3.0111	.3635	.8113	2.3546	.9982	1.0869	2.9948	.3793	.8181	1.8628	.9230	.9132	24.00
23.95	3.1196	.5215	.8923	2.4400	1.1341	1.1686	3.1014	.5379	.8997	1.8643	.9248	.9149	24.01
RUN = 524													
-3.50	1.2563	-1.6575	-.7163	.4746	.1837	-.0860	1.2634	-1.6742	-.7220	3.0459	1.9820	2.0003	26.51
-1.96	1.4706	-1.6837	-.6672	.6160	.1870	-.0189	1.4552	-1.6500	-.6555	3.1101	2.0368	2.0567	26.51
-.04	1.7318	-1.6423	-.5812	.8127	.2033	.0686	1.7129	-1.6044	-.5678	3.1025	2.0420	2.0619	26.51
2.00	1.9691	-1.5694	-.4827	.9893	.2345	.1642	1.9530	-1.5399	-.4721	3.0891	2.0333	2.0528	26.51
4.01	2.1895	-1.4955	-.3831	1.1438	.2785	.2658	2.1692	-1.4611	-.3706	3.0967	2.0395	2.0593	26.51
5.98	2.4028	-1.4031	-.2739	1.2990	.3302	.3737	2.3837	-1.3731	-.2627	3.0957	2.0352	2.0549	26.51
8.00	2.5876	-1.2989	-.1830	1.4254	.3913	.4634	2.5696	-1.2727	-.1730	3.0971	2.0315	2.0511	26.51
9.96	2.7681	-1.1997	-.0929	1.5503	.4477	.5528	2.7506	-1.1761	-.0836	3.0945	2.0291	2.0487	26.51
11.91	2.9515	-1.1042	-.0196	1.6701	.5115	.6303	2.9249	-1.0707	-.0061	3.0957	2.0424	2.0622	26.51
13.97	3.1841	-1.0047	.0525	1.8499	.5588	.7003	3.1607	-.9772	.0639	3.0958	2.0357	2.0554	26.51
16.03	3.4298	-.8575	.1462	2.0474	.6492	.7906	3.4126	-.8387	.1542	3.0945	2.0252	2.0448	26.51
17.94	3.6237	-.7147	.2245	2.1877	.7493	.8707	3.6017	-.6923	.2344	3.0940	2.0311	2.0507	26.51
20.00	3.7984	-.5400	.3257	2.3085	.8736	.9729	3.7734	-.5162	.3365	3.0905	2.0342	2.0538	26.51
22.03	3.9410	-.3537	.4188	2.4009	1.0071	1.0665	3.9141	-.3300	.4301	3.0955	2.0355	2.0551	26.51
23.95	4.0676	-.1764	.5046	2.4804	1.1341	1.1532	4.0375	-.1516	.5169	3.0925	2.0386	2.0583	26.51

TABLE 5.- CONTINUED.

VEO-WING 1/10-SCALE RESEARCH MODEL,VSTOL TEST NO. 204

ALPHA	CL	CD	CPM	CLE2	CDE2	CME2	CLCT	CDCT	CMCT	NPR	CT	CTRF	THETAJ
RUN = 525													
-3.81	-.0131	.0587	-.2473	-.0131	.0587	-.2473	-.0131	.0587	-.2473	1.0041	0.0000	0.0000	0.00
-2.05	.1470	.0491	-.1564	.1470	.0491	-.1564	.1470	.0491	-.1564	1.0042	0.0000	0.0000	0.00
-.02	.3007	.0491	-.0664	.3007	.0491	-.0664	.3007	.0491	-.0664	1.0042	0.0000	0.0000	0.00
1.99	.4566	.0548	.0305	.4566	.0548	.0305	.4566	.0548	.0305	1.0038	0.0000	0.0000	0.00
4.00	.6313	.0704	.1409	.6313	.0704	.1409	.6313	.0704	.1409	1.0035	0.0000	0.0000	0.00
5.95	.7596	.0945	.2328	.7596	.0945	.2328	.7596	.0945	.2328	1.0043	0.0000	0.0000	0.00
8.01	.9319	.1298	.3430	.9319	.1298	.3430	.9319	.1298	.3430	1.0045	0.0000	0.0000	0.00
9.99	1.0980	.1779	.4414	1.0980	.1779	.4414	1.0980	.1779	.4414	1.0043	0.0000	0.0000	0.00
11.94	1.2374	.2396	.5316	1.2374	.2396	.5316	1.2374	.2396	.5316	1.0044	0.0000	0.0000	0.00
14.01	1.4081	.3134	.6406	1.4081	.3134	.6406	1.4081	.3134	.6406	1.0041	0.0000	0.0000	0.00
16.08	1.5478	.3991	.7280	1.5478	.3991	.7280	1.5478	.3991	.7280	1.0042	0.0000	0.0000	0.00
17.99	1.6387	.4786	.8067	1.6387	.4786	.8067	1.6387	.4786	.8067	1.0039	0.0000	0.0000	0.00
19.95	1.7569	.5682	.9167	1.7569	.5682	.9167	1.7569	.5682	.9167	1.0034	0.0000	0.0000	0.00
21.98	1.8480	.6663	1.0240	1.8480	.6663	1.0240	1.8480	.6663	1.0240	1.0024	0.0000	0.0000	0.00
23.95	1.9223	.7676	1.1241	1.9223	.7676	1.1241	1.9223	.7676	1.1241	1.0015	0.0000	0.0000	0.00
RUN = 527													
-3.75	.2501	-.4494	-.3547	.1393	.0442	-.2338	.2494	-.4464	-.3540	1.4372	.5030	.5059	16.40
-2.05	.3795	-.4505	-.2942	.2541	.0400	-.1732	.3787	-.4473	-.2934	1.4352	.5033	.5063	16.39
-.03	.5507	-.4439	-.2044	.4082	.0415	-.0835	.5499	-.4410	-.2037	1.4366	.5031	.5060	16.39
2.03	.7313	-.4290	-.1050	.5716	.0507	.0159	.7305	-.4264	-.1043	1.4367	.5027	.5056	16.40
4.00	.9110	-.4040	-.0065	.7344	.0710	.1147	.9096	-.4003	-.0055	1.4376	.5039	.5068	16.40
5.97	1.1011	-.3720	.1079	.9082	.0968	.2292	1.0996	-.3682	.1089	1.4372	.5041	.5070	16.40
8.01	1.2792	-.3202	.1952	1.0701	.1410	.3162	1.2778	-.3170	.1960	1.4366	.5035	.5064	16.39
9.99	1.4359	-.2610	.2855	1.2119	.1906	.4060	1.4354	-.2600	.2857	1.4354	.5011	.5041	16.39
12.05	1.6481	-.1701	.4039	1.4077	.2736	.5245	1.6473	-.1686	.4043	1.4362	.5017	.5046	16.39
14.01	1.8345	-.0797	.5088	1.5792	.3553	.6294	1.8337	-.0784	.5092	1.4362	.5015	.5044	16.39
15.95	1.9830	.0134	.5950	1.7119	.4414	.7161	1.9810	.0166	.5959	1.4372	.5037	.5066	16.40
18.05	2.1231	.1167	.6916	1.8346	.5373	.8136	2.1190	.1227	.6934	1.4384	.5072	.5100	16.40
20.02	2.2579	.2280	.8023	1.9550	.6385	.9243	2.2535	.2339	.8040	1.4391	.5073	.5101	16.40
21.96	2.3750	.3425	.9102	2.0583	.7425	1.0323	2.3703	.3484	.9120	1.4403	.5075	.5102	16.41
24.01	2.4669	.4678	1.0175	2.1377	.8545	1.1390	2.4636	.4716	1.0187	1.4386	.5050	.5078	16.40

TABLE 5.- CONTINUED.

VEO-WING 1/10-SCALE RESEARCH MODEL, VSTOL TEST NO. 204

ALPHA	CL	CD	CPM	CLE2	CDE2	CME2	CLCT	CDCT	CMCT	NPR	CT	CTRF	THETAJ
RUN = 528													
-3.72	.4030	-.7916	-.4897	.1314	.0824	-.2406	.3952	-.7666	-.4825	1.8678	.9265	.9152	20.98
-1.92	.6007	-.7897	-.3967	.3019	.0753	-.1477	.5922	-.7650	-.3896	1.8673	.9264	.9152	20.98
-.00	.7827	-.7776	-.3138	.4542	.0788	-.0642	.7726	-.7513	-.3062	1.8685	.9285	.9172	20.99
1.94	.9584	-.7588	-.2296	.6002	.0881	.0207	.9466	-.7307	-.2213	1.8679	.9309	.9196	20.99
4.01	1.1567	-.7217	-.1268	.7690	.1099	.1229	1.1447	-.6959	-.1190	1.8676	.9288	.9175	20.98
5.98	1.3408	-.6787	-.0236	.9257	.1372	.2255	1.3288	-.6552	-.0165	1.8675	.9267	.9154	20.98
8.00	1.5483	-.6207	.0774	1.1040	.1814	.3270	1.5348	-.5963	.0850	1.8676	.9283	.9170	20.98
10.01	1.7253	-.5474	.1708	1.2542	.2367	.4198	1.7121	-.5254	.1778	1.8685	.9260	.9148	20.99
11.98	1.9363	-.4586	.2839	1.4382	.3094	.5330	1.9220	-.4366	.2910	1.8681	.9266	.9154	20.99
13.97	2.1187	-.3615	.3772	1.5926	.3910	.6271	2.1020	-.3376	.3852	1.8687	.9295	.9182	20.99
16.01	2.3084	-.2426	.4815	1.7569	.4896	.7310	2.2918	-.2205	.4890	1.8675	.9280	.9167	20.98
18.03	2.4584	-.1293	.5728	1.8795	.5853	.8230	2.4391	-.1055	.5811	1.8676	.9309	.9196	20.98
19.99	2.6176	.0027	.6886	2.0180	.6929	.9375	2.6010	.0217	.6955	1.8678	.9255	.9143	20.98
21.97	2.7294	.1300	.7849	2.1075	.7981	1.0333	2.7133	.1474	.7913	1.8669	.9240	.9127	20.98
23.94	2.8515	.2660	.9013	2.2054	.9139	1.1503	2.8332	.2844	.9084	1.8675	.9263	.9150	20.98
RUN = 529													
-3.68	.6170	-1.3662	-.6994	.1203	.0751	-.2628	.6063	-1.3353	-.6900	2.5408	1.5329	1.5245	22.70
-2.03	.8285	-1.3584	-.5979	.2914	.0658	-.1620	.8178	-1.3300	-.5892	2.5381	1.5306	1.5221	22.70
-.06	1.0339	-1.3445	-.5181	.4498	.0679	-.0799	1.0241	-1.3090	-.5071	2.5415	1.5387	1.5303	22.70
2.03	1.2720	-1.3093	-.4132	.6331	.0781	.0242	1.2572	-1.2770	-.4030	2.5418	1.5357	1.5274	22.70
4.00	1.4740	-1.2632	-.3207	.7887	.0994	.1161	1.4590	-1.2333	-.3111	2.5412	1.5336	1.5252	22.70
6.01	1.6818	-1.2109	-.2216	.9478	.1293	.2160	1.6644	-1.1792	-.2112	2.5429	1.5364	1.5280	22.70
7.98	1.9298	-1.1356	-.1069	1.1525	.1749	.3295	1.9136	-1.1082	-.0978	2.5412	1.5320	1.5237	22.70
9.95	2.1150	-1.0535	-.0155	1.2952	.2261	.4197	2.1000	-1.0300	-.0076	2.5406	1.5280	1.5196	22.70
11.98	2.3373	-.9520	.0922	1.4689	.3028	.5292	2.3178	-.9239	.1020	2.5409	1.5343	1.5260	22.70
13.94	2.5358	-.8374	.1897	1.6269	.3847	.6259	2.5171	-.8123	.1987	2.5384	1.5315	1.5231	22.70
15.97	2.7404	-.7059	.2950	1.7888	.4834	.7312	2.7208	-.6814	.3039	2.5406	1.5315	1.5232	22.70
18.00	2.9275	-.5704	.3940	1.9314	.5876	.8314	2.9042	-.5434	.4042	2.5397	1.5358	1.5274	22.70
20.01	3.0959	-.4206	.5044	2.0633	.6983	.9404	3.0751	-.3980	.5132	2.5410	1.5309	1.5225	22.70
22.04	3.2481	-.2722	.6160	2.1730	.8128	1.0535	3.2230	-.2469	.6263	2.5412	1.5359	1.5275	22.70
23.98	3.3679	-.1210	.7141	2.2575	.9264	1.1513	3.3427	-.0972	.7241	2.5398	1.5349	1.5265	22.70

TABLE 5.- CONTINUED.

VEO-WING 1/10-SCALE RESEARCH MODEL,VSTOL TEST NO. 204

ALPHA	CL	CD	CPM	CLE2	CDE2	CME2	CLCT	CDCT	CMCT	NPR	CT	CTRF	THETAJ
RUN = 530													
-3.64	.8850	-1.8095	-.9005	.1230	.0723	-.2651	.8740	-1.7823	-.8913	3.0848	2.0293	2.0299	25.67
-2.03	1.0767	-1.7907	-.8252	.2641	.0569	-.1907	1.0659	-1.7662	-.8168	3.0947	2.0267	2.0275	25.65
-.06	1.3106	-1.7642	-.7326	.4333	.0673	-.0970	1.2976	-1.7371	-.7232	3.0933	2.0300	2.0308	25.65
2.09	1.5696	-1.7199	-.6309	.6246	.0769	.0044	1.5559	-1.6938	-.6217	3.0954	2.0294	2.0301	25.65
3.99	1.7908	-1.6734	-.5358	.7839	.0966	.1014	1.7732	-1.6424	-.5247	3.0970	2.0356	2.0364	25.65
5.95	2.0043	-1.6156	-.4373	.9355	.1216	.2009	1.9839	-1.5825	-.4252	3.0960	2.0389	2.0396	25.65
10.00	2.4802	-1.4338	-.2323	1.2929	.2219	.4053	2.4589	-1.4040	-.2208	3.0995	2.0366	2.0374	25.64
12.03	2.7177	-1.3086	-.1144	1.4766	.2982	.5209	2.6996	-1.2852	-.1052	3.0964	2.0296	2.0303	25.65
13.98	2.9252	-1.1799	-.0156	1.6328	.3804	.6185	2.9090	-1.1604	-.0076	3.0955	2.0253	2.0261	25.65
16.02	3.1500	-1.0344	.0851	1.7979	.4851	.7216	3.1279	-1.0096	.0955	3.0931	2.0332	2.0340	25.63
17.97	3.3282	-.8859	.1613	1.9282	.5833	.8164	3.3084	-.8651	.1902	3.0941	2.0286	2.0294	25.65
20.03	3.5309	-.7258	.2927	2.0728	.6931	.9305	3.5042	-.6998	.3044	3.0938	2.0373	2.0380	25.65
21.96	3.6699	-.5704	.3796	2.1633	.8046	1.0180	3.6411	-.5441	.3918	3.0924	2.0390	2.0397	25.66
23.99	3.8152	-.3908	.5066	2.2660	.9255	1.1428	3.7907	-.3699	.5167	3.0915	2.0322	2.0329	25.66
RUN = 531													
8.01	.9286	.1549	.3304	.9286	.1549	.3304	.9286	.1549	.3304	1.0034	0.0000	0.0000	0.00
8.02	1.0150	.0802	.3018	.9639	.1766	.3302	1.0313	.0496	.2927	1.0482	.0758	.1090	19.92
8.02	1.1341	-.0128	.2635	1.0437	.1650	.3132	1.1472	-.0386	.2562	1.1341	.1746	.1994	18.94
8.01	1.2338	-.2236	.2090	1.0652	.1493	.3050	1.2336	-.2231	.2091	1.3394	.4005	.4092	16.33
8.00	1.4808	-.5173	.0956	1.1050	.1926	.3087	1.4752	-.5066	.0988	1.7445	.8122	.8033	19.89
8.01	1.7176	-.8492	-.0206	1.1125	.1909	.3177	1.7098	-.8356	-.0162	2.1821	1.2158	1.2033	22.18
8.01	1.9646	-1.2026	-.1594	1.1322	.1895	.3079	1.9501	-1.1783	-.1513	2.6548	1.6284	1.6220	22.87
8.02	2.2570	-1.5116	-.3261	1.1271	.1856	.3119	2.2359	-1.4799	-.3142	3.1028	2.0380	2.0389	25.64
8.01	2.8246	-2.5660	-.6592	1.1093	.2043	.3216	2.7953	-2.5187	-.6414	3.5021	3.2556	3.2585	23.75
7.98	3.6801	-3.9378	-1.1576	1.1017	.2160	.3155	3.6883	-3.9510	-1.1623	3.4851	4.8845	4.0890	23.85
RUN = 532													
-3.79	-.1219	.0414	-.1117	-.1219	.0414	-.1117	-.1219	.0414	-.1117	1.0036	0.0000	0.0000	0.00
-1.98	.0478	.0278	-.0608	.0478	.0278	-.0608	.0478	.0278	-.0608	1.0035	0.0000	0.0000	0.00
-.04	.1598	.0259	-.0171	.1598	.0259	-.0171	.1598	.0259	-.0171	1.0037	0.0000	0.0000	0.00
2.04	.3043	.0284	.0353	.3043	.0284	.0353	.3043	.0284	.0353	1.0035	0.0000	0.0000	0.00
4.02	.4332	.0387	.0819	.4332	.0387	.0819	.4332	.0387	.0819	1.0028	0.0000	0.0000	0.00
6.01	.5863	.0514	.1316	.5863	.0514	.1316	.5863	.0514	.1316	1.0037	0.0000	0.0000	0.00
8.01	.7026	.0785	.1660	.7026	.0785	.1660	.7026	.0785	.1660	1.0040	0.0000	0.0000	0.00
9.97	.8495	.1185	.2152	.8495	.1185	.2152	.8495	.1185	.2152	1.0047	0.0000	0.0000	0.00
12.00	.9741	.1758	.2667	.9741	.1758	.2667	.9741	.1758	.2667	1.0042	0.0000	0.0000	0.00
14.08	1.0670	.2385	.3184	1.0670	.2385	.3184	1.0670	.2385	.3184	1.0005	0.0000	0.0000	0.00
16.03	1.1834	.3145	.3603	1.1834	.3145	.3603	1.1834	.3145	.3603	1.0000	0.0000	0.0000	0.00
17.99	1.3070	.3951	.4155	1.3070	.3951	.4155	1.3070	.3951	.4155	1.0000	0.0000	0.0000	0.00
20.03	1.3812	.4654	.4819	1.3812	.4654	.4819	1.3812	.4654	.4819	1.0000	0.0000	0.0000	0.00
22.06	1.4452	.5387	.5399	1.4452	.5387	.5399	1.4452	.5387	.5399	1.0000	0.0000	0.0000	0.00
24.07	1.5411	.6268	.6211	1.5411	.6268	.6211	1.5411	.6268	.6211	1.0000	0.0000	0.0000	0.00

TABLE 5.- CONTINUED.

VEO-WING 1/10-SCALE RESEARCH MODEL, VSTOL TEST NO. 204

ALPHA	CL	CD	CPM	CLE2	CDE2	CME2	CLCT	CDCT	CMCT	NPR	CT	CTRF	THETAJ
RUN = 533													
-3.77	-.1243	-.4564	-.1986	-.1537	.0489	-.1219	-.1240	-.4618	-.1994	1.4498	.4947	.5063	7.11
-2.07	.0577	-.4685	-.1520	.0134	.0344	-.0755	.0583	-.4753	-.1530	1.4489	.4933	.5048	7.11
.07	.2393	-.4703	-.1037	.1762	.0306	-.0272	.2402	-.4770	-.1047	1.4478	.4933	.5048	7.11
1.99	.4032	-.4638	-.0542	.3236	.0331	.0220	.4045	-.4721	-.0555	1.4473	.4918	.5033	7.11
4.02	.5853	-.4471	-.0099	.4883	.0459	.0662	.5871	-.4561	-.0113	1.4474	.4910	.5024	7.11
6.03	.7368	-.4310	.0361	.6224	.0586	.1123	.7388	-.4397	.0348	1.4466	.4913	.5028	7.11
8.02	.8948	-.3958	.0828	.7636	.0894	.1590	.8972	-.4045	.0815	1.4471	.4912	.5026	7.11
10.05	1.0841	-.3378	.1303	.9366	.1398	.2060	1.0876	-.3491	.1285	1.4463	.4885	.4999	7.11
12.06	1.2275	-.2716	.1694	1.0629	.2020	.2453	1.2309	-.2813	.1678	1.4460	.4899	.5013	7.11
14.00	1.3729	-.1912	.1998	1.1921	.2770	.2758	1.3764	-.2003	.1983	1.4462	.4905	.5019	7.11
16.08	1.5569	-.0861	.2240	1.3602	.3730	.2996	1.5617	-.0973	.2222	1.4454	.4881	.4995	7.11
18.08	1.6970	.0044	.2779	1.4835	.4583	.3538	1.7013	-.0047	.2764	1.4453	.4902	.5016	7.11
19.99	1.8184	.0983	.3382	1.5903	.5441	.4140	1.8234	.0886	.3365	1.4449	.4893	.5008	7.11
22.05	1.9303	.2002	.4045	1.6853	.6391	.4806	1.9347	.1923	.4032	1.4451	.4912	.5026	7.11
24.02	2.0245	.3050	.4722	1.7651	.7344	.5481	2.0297	.2964	.4707	1.4450	.4901	.5016	7.11
RUN = 534													
-3.75	-.0392	-.8378	-.2406	-.0927	.0676	-.1203	-.0388	-.8446	-.2415	1.8896	.8933	.9070	7.13
-2.04	.1151	-.8456	-.2082	.0347	.0576	-.0878	.1157	-.8527	-.2091	1.8872	.8931	.9068	7.13
-.05	.2990	-.8469	-.1670	.1870	.0549	-.0465	.2996	-.8519	-.1677	1.8903	.8950	.9087	7.13
2.04	.5224	-.8401	-.1094	.3774	.0579	.0113	.5230	-.8443	-.1099	1.8893	.8959	.9096	7.13
4.00	.6794	-.8254	-.0697	.5043	.0650	.0507	.6806	-.8316	-.0705	1.8893	.8938	.9075	7.13
6.05	.8711	-.8041	-.0180	.6641	.0796	.1024	.8725	-.8101	-.0188	1.8903	.8939	.9076	7.13
8.05	1.0563	-.7588	.0267	.8289	.1156	.1469	1.0583	-.7663	.0257	1.8892	.8924	.9061	7.13
10.00	1.2233	-.7022	.0654	.9570	.1615	.1853	1.2262	-.7117	.0641	1.8896	.8902	.9038	7.13
12.02	1.3917	-.6238	.0974	1.0957	.2283	.2171	1.3956	-.6349	.0959	1.8894	.8884	.9020	7.13
14.00	1.5596	-.5333	.1293	1.2346	.3078	.2489	1.5640	-.5445	.1277	1.8890	.8881	.9018	7.13
16.05	1.7701	-.4239	.1564	1.4137	.4084	.2765	1.7734	-.4316	.1552	1.8891	.8917	.9054	7.13
18.07	1.9688	-.3080	.2189	1.5820	.5141	.3394	1.9710	-.3127	.2182	1.8889	.8949	.9086	7.13
20.01	2.1034	-.1989	.2713	1.6907	.6062	.3913	2.1076	-.2070	.2701	1.8883	.8910	.9047	7.13
22.02	2.2403	-.0802	.3365	1.7993	.7107	.4567	2.2444	-.0874	.3354	1.8875	.8918	.9055	7.13
24.02	2.3453	.0326	.3996	1.8761	.8088	.5200	2.3488	.0268	.3987	1.8875	.8933	.9071	7.13

TABLE 5.- CONTINUED.

VEO-WING 1/10-SCALE RESEARCH MODEL, VSTOL TEST NO. 204

ALPHA	CL	CD	CPM	CLE2	CDE2	CME2	CLCT	CDCT	CMCT	NPR	CT	CTRF	THETAJ
RUN = 535													
-3.73	-.0005	-1.4280	-.3188	-.0943	.0598	-.1213	.0007	-1.4484	-.3215	2.5654	1.4798	1.4908	7.34
-2.02	.1697	-1.4384	-.2870	.0315	.0494	-.0894	.1712	-1.4554	-.2893	2.5607	1.4831	1.4941	7.32
-.01	.3861	-1.4358	-.2495	.1958	.0458	-.0518	.3883	-1.4531	-.2518	2.5628	1.4827	1.4938	7.33
2.03	.5991	-1.4222	-.1993	.3561	.0514	-.0016	.6019	-1.4397	-.2017	2.5635	1.4824	1.4934	7.33
4.00	.8125	-1.4065	-.1534	.5187	.0605	.0446	.8154	-1.4213	-.1554	2.5622	1.4850	1.4961	7.33
6.04	1.0483	-1.3772	-.0963	.7024	.0797	.1017	1.0515	-1.3906	-.0981	2.5595	1.4863	1.4974	7.32
8.05	1.2228	-1.3307	-.0607	.8257	.1131	.1375	1.2265	-1.3440	-.0625	2.5627	1.4863	1.4974	7.33
10.03	1.4200	-1.2539	-.0237	.9762	.1614	.1732	1.4269	-1.2810	-.0268	2.5615	1.4770	1.4880	7.33
12.04	1.6391	-1.1684	.0040	1.1467	.2329	.2005	1.6477	-1.1929	.0005	2.5616	1.4743	1.4853	7.33
14.00	1.8165	-1.0804	.0346	1.2749	.3068	.2316	1.8245	-1.1009	.0317	2.5611	1.4782	1.4892	7.32
16.00	2.0658	-.9514	.0548	1.4745	.4202	.2523	2.0728	-.9675	.0525	2.5597	1.4825	1.4936	7.32
18.01	2.2703	-.8287	.1000	1.6297	.5247	.2980	2.2763	-.8412	.0982	2.5601	1.4862	1.4973	7.32
20.04	2.4742	-.6848	.1649	1.7884	.6406	.3622	2.4829	-.7016	.1624	2.5593	1.4813	1.4923	7.32
21.98	2.6234	-.5490	.2261	1.8971	.7454	.4224	2.6366	-.5725	.2226	2.5600	1.4733	1.4843	7.32
24.06	2.7724	-.4053	.3000	1.9996	.8618	.4962	2.7864	-.4283	.2964	2.5590	1.4733	1.4843	7.32
RUN = 536													
-3.73	.0289	-1.9284	-.4282	-.1077	.0613	-.1402	.0306	-1.9526	-.4318	3.1257	1.9759	1.9944	7.66
-2.01	.2643	-1.9347	-.3842	.0664	.0476	-.0955	.2669	-1.9610	-.3881	3.1170	1.9739	1.9922	7.71
.01	.4769	-1.9267	-.3433	.2087	.0464	-.0543	.4806	-1.9537	-.3473	3.1143	1.9730	1.9912	7.73
2.01	.6922	-1.9120	-.2997	.3553	.0496	-.0107	.6969	-1.9397	-.3038	3.1134	1.9722	1.9904	7.74
4.04	.9266	-1.8900	-.2460	.5211	.0588	.0426	.9323	-1.9174	-.2501	3.1166	1.9722	1.9905	7.72
6.02	1.1431	-1.8677	-.2027	.6683	.0775	.0872	1.1470	-1.8836	-.2051	3.1198	1.9838	2.0022	7.69
7.97	1.3520	-1.8114	-.1531	.8127	.1069	.1361	1.3590	-1.8363	-.1568	3.1145	1.9744	1.9927	7.73
10.09	1.5784	-1.7353	-.1118	.9694	.1572	.1771	1.5568	-1.6681	-.1015	3.1113	1.9699	1.9881	7.75
12.05	1.8031	-1.6457	-.0758	1.1355	.2256	.2127	1.8183	-1.6740	-.0801	3.1153	1.9703	1.9885	7.72
14.07	2.0381	-1.5332	-.0509	1.3002	.3127	.2375	2.0120	-1.4679	-.0407	3.1156	1.9697	1.9879	7.72
16.04	2.2709	-1.4046	-.0277	1.4699	.4129	.2608	2.2432	-1.3417	-.0177	3.1124	1.9680	1.9862	7.74
18.06	2.4817	-1.2609	.0195	1.6143	.5119	.3090	2.4934	-1.3050	.0156	3.1103	1.9735	1.9916	7.76
20.05	2.6888	-1.1385	.0875	1.7611	.6216	.3765	2.7022	-1.1640	.0833	3.1121	1.9714	1.9896	7.74
22.08	2.8696	-.9944	.1479	1.8795	.7329	.4371	2.8833	-1.0182	.1439	3.1123	1.9729	1.9910	7.74
24.05	3.0382	-.8444	.2187	1.9898	.8472	.5077	3.0531	-.8684	.2146	3.1127	1.9720	1.9902	7.74
RUN = 537													
8.00	.7065	.0887	.1623	.7065	.0887	.1623	.7065	.0887	.1623	1.0004	0.0000	0.0000	0.00
7.99	.6978	.0082	.1670	.6732	.1017	.1806	.6986	.0053	.1666	1.0376	.0970	.0967	6.77
8.00	.7757	-.1151	.1398	.7203	.0789	.1676	.7763	-.1171	.1395	1.1405	.1979	.2017	7.94
8.00	.8530	-.3159	.0913	.7467	.0758	.1513	.8540	-.3197	.0907	1.3482	.3962	.4058	7.18
8.01	1.0098	-.6627	.0388	.7980	.1212	.1505	1.0103	-.6644	.0386	1.7847	.7982	.8120	7.11
8.02	1.1531	-1.0146	-.0107	.8423	.1354	.1385	1.1586	-1.0351	-.0133	2.2147	1.1790	1.1912	7.10
7.99	1.2648	-1.4260	-.0881	.8282	.1241	.1355	1.2651	-1.4270	-.0883	2.7023	1.5990	1.6104	7.74
7.99	1.3475	-1.8567	-.1480	.8069	.1164	.1414	1.3407	-1.8318	-.1443	3.1809	2.0255	2.0458	7.33
8.01	1.6198	-2.9965	-.2883	.7948	.1467	.1505	1.6208	-3.0001	-.2888	3.5596	3.1963	3.2497	6.70
8.02	2.0570	-4.4996	-.4950	.8323	.1621	.1567	2.0454	-4.4554	-.4888	3.5186	4.7451	4.8199	6.70

TABLE 5.- CONTINUED.

VEO-WING 1/10-SCALE RESEARCH MODEL,VSTOL TEST NO. 204

ALPHA	CL	CD	CPM	CLE2	CDE2	CME2	CLCT	CDCT	CMCT	NPR	CT	CTRF	THETAJ
RUN = 538													
-3.73	.1931	.0515	-.1801	.1931	.0515	-.1801	.1931	.0515	-.1801	1.0005	0.0000	0.0000	0.00
-2.02	.3255	.0489	-.1321	.3255	.0489	-.1321	.3255	.0489	-.1321	1.0001	0.0000	0.0000	0.00
-.00	.4384	.0570	-.0950	.4384	.0570	-.0950	.4384	.0570	-.0950	1.0000	0.0000	0.0000	0.00
2.03	.5729	.0656	-.0432	.5729	.0656	-.0432	.5729	.0656	-.0432	1.0000	0.0000	0.0000	0.00
4.01	.7118	.0801	.0121	.7118	.0801	.0121	.7118	.0801	.0121	1.0000	0.0000	0.0000	0.00
5.98	.8463	.1055	.0592	.8463	.1055	.0592	.8463	.1055	.0592	1.0000	0.0000	0.0000	0.00
8.00	.9605	.1443	.1047	.9605	.1443	.1047	.9605	.1443	.1047	1.0012	0.0000	0.0000	0.00
10.04	1.0664	.1941	.1546	1.0664	.1941	.1546	1.0664	.1941	.1546	1.0012	0.0000	0.0000	0.00
12.01	1.1772	.2575	.2108	1.1772	.2575	.2108	1.1772	.2575	.2108	1.0000	0.0000	0.0000	0.00
13.98	1.2537	.3269	.2575	1.2537	.3269	.2575	1.2537	.3269	.2575	1.0000	0.0000	0.0000	0.00
16.03	1.3965	.4151	.3024	1.3965	.4151	.3024	1.3965	.4151	.3024	1.0000	0.0000	0.0000	0.00
18.05	1.5031	.4999	.3645	1.5031	.4999	.3645	1.5031	.4999	.3645	1.0000	0.0000	0.0000	0.00
20.08	1.5730	.5769	.4313	1.5730	.5769	.4313	1.5730	.5769	.4313	1.0000	0.0000	0.0000	0.00
22.09	1.6285	.6506	.5060	1.6285	.6506	.5060	1.6285	.6506	.5060	1.0000	0.0000	0.0000	0.00
24.03	1.6799	.7252	.5776	1.6799	.7252	.5776	1.6799	.7252	.5776	1.0000	0.0000	0.0000	0.00
RUN = 539													
-3.70	.3741	-.4507	-.3247	.2729	.0565	-.2056	.3730	-.4454	-.3234	1.4612	.5053	.5172	14.98
-1.99	.5446	-.4430	-.2756	.4290	.0560	-.1575	.5445	-.4426	-.2755	1.4556	.5005	.5123	15.04
.02	.6763	-.4284	-.2405	.5435	.0651	-.1227	.6765	-.4291	-.2407	1.4548	.4993	.5111	15.05
2.07	.8514	-.4120	-.1823	.7012	.0751	-.0647	.8520	-.4140	-.1828	1.4525	.4979	.5097	15.07
3.99	.9818	-.3819	-.1469	.8169	.0944	-.0305	.9843	-.3893	-.1487	1.4490	.4923	.5040	15.10
6.04	1.1323	-.3416	-.0964	.9519	.1244	.0190	1.1367	-.3529	-.0992	1.4466	.4881	.4997	15.13
8.05	1.2830	-.2933	-.0409	1.0865	.1653	.0744	1.2881	-.3052	-.0439	1.4446	.4873	.4989	15.15
10.02	1.4007	-.2518	-.0014	1.1814	.2191	.1181	1.3974	-.2448	.0004	1.4651	.5076	.5195	14.95
12.03	1.5151	-.1742	.0525	1.2807	.2856	.1713	1.5132	-.1704	.0535	1.4610	.5042	.5161	14.99
14.03	1.6669	-.0768	.0803	1.4166	.3742	.1991	1.6650	-.0733	.0812	1.4594	.5039	.5158	15.00
16.00	1.8162	.0243	.1269	1.5527	.4622	.2447	1.8165	.0237	.1267	1.4555	.4993	.5111	15.04
18.02	1.9368	.1266	.1777	1.6599	.5513	.2947	1.9395	.1226	.1766	1.4509	.4953	.5070	15.08
20.00	2.0647	.2344	.2544	1.7743	.6475	.3710	2.0686	.2287	.2529	1.4490	.4933	.5049	15.10
22.04	2.1659	.3416	.3435	1.8608	.7442	.4601	2.1700	.3362	.3419	1.4473	.4935	.5052	15.12
24.00	2.2067	.4357	.3983	1.8913	.8229	.5137	2.2146	.4260	.3954	1.4429	.4878	.4994	15.16

TABLE 5.- CONTINUED.

VEO-WING 1/10-SCALE RESEARCH MODEL, VSTOL TEST NO. 204

ALPHA	CL	CD	CPM	CLE2	CDE2	CME2	CLCT	CDCT	CMCT	NPR	CT	CTRF	THETAJ
RUN = 540													
-3.67	.5268	-.7921	-.4349	.3231	.0885	-.2197	.5297	-.8050	-.4380	1.8852	.8870	.9039	16.69
-2.00	.6755	-.7879	-.4010	.4451	.0910	-.1848	.6776	-.7961	-.4031	1.8848	.8916	.9085	16.68
.05	.8822	-.7777	-.3457	.6192	.0961	-.1285	.8835	-.7821	-.3468	1.8858	.8955	.9125	16.70
2.01	1.0344	-.7507	-.3006	.7420	.1118	-.0837	1.0364	-.7566	-.3021	1.8866	.8938	.9107	16.72
5.95	1.3702	-.6700	-.2102	1.0211	.1668	.0056	1.3742	-.6795	-.2127	1.8855	.8899	.9067	16.70
4.03	1.2020	-.7134	-.2581	.8812	.1342	-.0424	1.2058	-.7234	-.2607	1.8858	.8894	.9063	16.70
6.04	1.5179	-.6087	-.1589	1.1400	.2116	.0560	1.5237	-.6213	-.1623	1.8855	.8864	.9032	16.70
10.07	1.6630	-.5355	-.1087	1.2558	.2717	.1065	1.6688	-.5471	-.1118	1.8854	.8872	.9040	16.69
12.02	1.7837	-.4572	-.0634	1.3483	.3374	.1523	1.7890	-.4668	-.0660	1.8860	.8892	.9061	16.71
14.02	1.9570	-.3531	-.0350	1.4926	.4285	.1814	1.9610	-.3599	-.0369	1.8855	.8922	.9091	16.70
16.01	2.1253	-.2390	.0073	1.6337	.5262	.2239	2.1294	-.2453	.0055	1.8859	.8926	.9095	16.71
17.98	2.2930	-.1191	.0672	1.7758	.6292	.2836	2.2972	-.1252	.0654	1.8839	.8927	.9097	16.67
20.04	2.4238	.0094	.1360	1.8837	.7334	.3510	2.4321	-.0017	.1327	1.8849	.8864	.9032	16.68
22.07	2.5271	.1283	.2079	1.9613	.8331	.4230	2.5354	.1180	.2048	1.8848	.8870	.9038	16.68
24.00	2.6158	.2383	.2775	2.0238	.9269	.4936	2.6216	.2315	.2754	1.8849	.8912	.9081	16.69
RUN = 541													
-3.64	.7266	-1.3715	-.6008	.2847	.0669	-.2046	.7323	-1.3901	-.6060	2.5705	1.4808	1.5048	20.72
-2.03	.8855	-1.3576	-.5676	.4035	.0663	-.1718	.8922	-1.3774	-.5731	2.5611	1.4794	1.5033	20.73
.02	1.0309	-1.3276	-.5189	.5499	.0737	-.1244	1.0901	-1.3516	-.5257	2.5578	1.4747	1.4985	20.73
2.11	1.3225	-1.3116	-.4628	.7344	.0851	-.0638	1.3259	-1.3197	-.4651	2.5639	1.4914	1.5155	20.73
4.04	1.4752	-1.2625	-.4260	.8437	.1063	-.0290	1.4822	-1.2777	-.4304	2.5638	1.4836	1.5075	20.73
6.06	1.6773	-1.2070	-.3751	.9988	.1370	.0213	1.6857	-1.2237	-.3800	2.5626	1.4816	1.5055	20.73
8.02	1.8413	-1.1321	-.3244	1.1204	.1620	.0703	1.8535	-1.1544	-.3311	2.5620	1.4750	1.4988	20.73
9.96	1.9855	-1.0603	-.2875	1.2166	.2355	.1092	1.9944	-1.0753	-.2921	2.5657	1.4828	1.5067	20.72
12.03	2.1488	-.9552	-.2401	1.3345	.3101	.1560	2.1594	-.9717	-.2453	2.5629	1.4807	1.5046	20.73
14.05	2.3429	-.8247	-.2107	1.4869	.4080	.1845	2.3563	-.8440	-.2168	2.5639	1.4769	1.5008	20.73
16.00	2.5305	-.7044	-.1663	1.6309	.5012	.2297	2.5424	-.7204	-.1716	2.5632	1.4803	1.5042	20.73
18.02	2.7228	-.5607	-.1115	1.7831	.6105	.2839	2.7370	-.5784	-.1174	2.5626	1.4777	1.5015	20.73
20.05	2.8799	-.4270	-.0391	1.8947	.7152	.3580	2.8903	-.4390	-.0433	2.5615	1.4844	1.5084	20.73
22.10	2.9910	-.2935	.0298	1.9657	.8123	.4268	3.0020	-.3055	.0255	2.5600	1.4840	1.5080	20.73
24.06	3.1010	-.1517	.1063	2.0417	.9155	.5022	3.1155	-.1663	.1009	2.5618	1.4797	1.5036	20.73

TABLE 5.- CONTINUED.

VEO-WING 1/10-SCALE RESEARCH MODEL, VSTOL TEST NO. 204

ALPHA	CL	CD	CPM	CLE2	CDE2	CME2	CLCT	CDCT	CMCT	NPR	CT	CTRF	THETAJ
RUN = 542													
-3.64	.8338	-1.8812	-.7279	.2862	.0581	-.2151	.8401	-1.9035	-.7338	3.1162	1.9772	2.0152	19.41
-2.03	.9968	-1.8486	-.6917	.3996	.0622	-.1830	.9772	-1.7859	-.6750	3.1049	1.9645	2.0020	19.39
.07	1.2450	-1.8268	-.6317	.5767	.0644	-.1219	1.2218	-1.7612	-.6140	3.1072	1.9683	2.0059	19.39
1.98	1.4354	-1.7919	-.5933	.7042	.0772	-.0833	1.4096	-1.7259	-.5753	3.1063	1.9695	2.0071	19.39
4.02	1.6235	-1.7375	-.5515	.8289	.0986	-.0432	1.5979	-1.6784	-.5351	3.1043	1.9632	2.0006	19.38
6.00	1.8305	-1.6918	-.5086	.9673	.1265	.0031	1.8414	-1.7148	-.5151	3.1088	1.9751	2.0128	19.39
8.03	2.0050	-1.6095	-.4569	1.0822	.1691	.0523	1.9739	-1.5497	-.4398	3.1062	1.9661	2.0036	19.39
10.00	2.1953	-1.5227	-.4024	1.2106	.2262	.1076	2.1605	-1.4610	-.3844	3.1045	1.9695	2.0070	19.39
12.02	2.3435	-1.4225	-.3519	1.3005	.2856	.1568	2.3096	-1.3670	-.3353	3.1073	1.9638	2.0013	19.39
14.05	2.5620	-1.2803	-.3209	1.4642	.3822	.1855	2.5312	-1.2336	-.3067	3.1082	1.9549	1.9923	19.39
16.01	2.7542	-1.1536	-.2765	1.5971	.4747	.2312	2.7187	-1.1036	-.2609	3.1069	1.9602	1.9976	19.39
18.05	2.9497	-1.0083	-.2207	1.7353	.5781	.2870	2.9122	-.9593	-.2050	3.1054	1.9605	1.9979	19.39
20.02	3.1304	-.8641	-.1534	1.8576	.6849	.3561	3.0868	-.8111	-.1360	3.1062	1.9673	2.0048	19.39
22.03	3.2642	-.7224	-.0767	1.9383	.7811	.4324	3.2189	-.6711	-.0593	3.1011	1.9672	2.0046	19.38
24.04	3.3862	-.5653	-.0055	2.0121	.8865	.5025	3.3431	-.5198	.0104	3.1062	1.9616	1.9990	19.39
RUN = 543													
8.00	.9603	.1326	.0925	.9603	.1326	.0925	.9603	.1326	.0925	1.0000	0.0000	0.0000	0.00
8.01	1.0094	.0542	.0768	.9617	.1494	.1016	1.0075	.0580	.0778	1.0446	.1042	.1066	18.61
8.00	1.1203	-.0517	.0325	1.0349	.1332	.0807	1.1209	-.0530	.0322	1.1409	.1985	.2036	16.81
8.02	1.2481	-.2246	-.0224	1.0849	.1392	.0716	1.2527	-.2348	-.0250	1.3405	.3890	.3987	16.14
8.03	1.4467	-.5387	-.1215	1.1330	.1958	.0612	1.4535	-.5546	-.1255	1.7696	.7831	.7988	15.09
8.05	1.7230	-.8552	-.2548	1.1384	.1997	.0603	1.7298	-.8674	-.2584	2.2239	1.1863	1.2061	20.95
7.99	1.8758	-1.2277	-.3600	1.1095	.1835	.0622	1.8855	-1.2456	-.3653	2.6768	1.5800	1.6059	20.51
7.99	2.0172	-1.6022	-.4535	1.0948	.1778	.0563	1.9857	-1.5414	-.4361	3.1106	1.9672	2.0048	19.40
8.01	2.5349	-2.7457	-.7285	1.0893	.1942	.0772	2.5368	-2.7496	-.7296	3.5563	3.1957	3.2761	18.17
7.99	3.2502	-4.1727	-1.1313	1.0953	.1995	.0702	3.2248	-4.1211	-1.1171	3.5386	4.7561	4.8743	18.24
RUN = 544													
-1.97	.9812	-1.8237	-.6821	.3811	.0871	-.1726	.9613	-1.7603	-.6652	3.1138	1.9652	2.0029	19.41
.07	1.2141	-1.8067	-.6347	.5422	.0929	-.1219	1.2219	-1.8288	-.6407	3.1169	1.9770	2.0149	19.41
2.07	1.4151	-1.7658	-.5882	.6788	.1057	-.0766	1.4250	-1.7911	-.5951	3.1132	1.9733	2.0111	19.40
4.02	1.6197	-1.7180	-.5411	.8211	.1247	-.0301	1.6316	-1.7456	-.5487	3.1151	1.9705	2.0083	19.41
5.99	1.8072	-1.6649	-.5005	.9451	.1504	.0108	1.8195	-1.6909	-.5078	3.1148	1.9718	2.0096	19.41
8.02	2.0201	-1.5904	-.4418	1.0930	.1961	.0703	2.0318	-1.6131	-.4483	3.1146	1.9749	2.0128	19.41
10.03	2.1852	-1.4914	-.3861	1.2017	.2520	.1231	2.1532	-1.4345	-.3695	3.1134	1.9641	2.0017	19.40
12.05	2.3310	-1.3846	-.3376	1.2900	.3176	.1697	2.3003	-1.3343	-.3226	3.1102	1.9579	1.9953	19.40
14.07	2.5362	-1.2581	-.3104	1.4348	.4075	.1975	2.5028	-1.2076	-.2950	3.1118	1.9594	1.9969	19.40
15.96	2.7405	-1.1444	-.2772	1.5763	.4961	.2346	2.7560	-1.1662	-.2840	3.1138	1.9738	2.0116	19.41
18.02	2.9473	-.9855	-.2134	1.7282	.6074	.2968	2.9051	-.9303	-.1957	3.1135	1.9682	2.0059	19.40
20.05	3.1114	-.8403	-.1411	1.8381	.7069	.3685	3.0686	-.7883	-.1240	3.1120	1.9661	2.0037	19.40
22.01	3.2630	-.7021	-.0665	1.9314	.8079	.4454	3.2795	-.7208	-.0728	3.1102	1.9754	2.0132	19.40
24.01	3.3707	-.5486	.0022	1.9932	.9073	.5120	3.3241	-.4993	.0194	3.1135	1.9666	2.0043	19.40

TABLE 5.- CONTINUED.

VEO-WING 1/10-SCALE RESEARCH MODEL,VSTOL TEST NO. 204

ALPHA	CL	CD	CPM	CLE2	CDE2	CME2	CLCT	CDCT	CMCT	NPR	CT	CTRF	THETAJ
RUN = 545													
-3.66	.1700	.0439	-.1952	.1700	.0439	-.1952	.1700	.0439	-.1952	1.0002	0.0000	0.0000	0.00
-1.97	.2944	.0422	-.1496	.2944	.0422	-.1496	.2944	.0422	-.1496	1.0007	0.0000	0.0000	0.00
2.00	.5674	.0562	-.0501	.5674	.0562	-.0501	.5674	.0562	-.0501	1.0000	0.0000	0.0000	0.00
3.98	.6990	.0717	.0035	.6990	.0717	.0035	.6990	.0717	.0035	1.0000	0.0000	0.0000	0.00
5.98	.8303	.0969	.0467	.8303	.0969	.0467	.8303	.0969	.0467	1.0000	0.0000	0.0000	0.00
8.00	.9579	.1361	.1019	.9579	.1361	.1019	.9579	.1361	.1019	1.0007	0.0000	0.0000	0.00
9.98	1.0655	.1810	.1585	1.0655	.1810	.1585	1.0655	.1810	.1585	1.0007	0.0000	0.0000	0.00
12.01	1.1661	.2458	.2136	1.1661	.2458	.2136	1.1661	.2458	.2136	1.0000	0.0000	0.0000	0.00
14.00	1.2679	.3265	.2663	1.2679	.3265	.2663	1.2679	.3265	.2663	1.0000	0.0000	0.0000	0.00
16.00	1.3840	.4058	.3060	1.3840	.4058	.3060	1.3840	.4058	.3060	1.0000	0.0000	0.0000	0.00
18.01	1.4746	.4877	.3590	1.4746	.4877	.3590	1.4746	.4877	.3590	1.0000	0.0000	0.0000	0.00
19.99	1.5576	.5654	.4341	1.5576	.5654	.4341	1.5576	.5654	.4341	1.0000	0.0000	0.0000	0.00
22.01	1.6248	.6470	.5090	1.6248	.6470	.5090	1.6248	.6470	.5090	1.0000	0.0000	0.0000	0.00
23.99	1.6712	.7252	.5700	1.6712	.7252	.5700	1.6712	.7252	.5700	1.0000	0.0000	0.0000	0.00
.01	.4383	.0515	-.0995	.4383	.0515	-.0995	.4383	.0515	-.0995	1.0006	0.0000	0.0000	0.00
RUN = 546													
-3.67	.5380	-.8115	-.4369	.3290	.0798	-.2180	.5384	-.8130	-.4373	1.8940	.8985	.9155	16.87
-2.00	.6723	-.7852	-.3971	.4475	.0851	-.1842	.6769	-.8029	-.4014	1.8747	.8821	.8989	16.49
-.02	.8441	-.7660	-.3532	.5892	.0959	-.1403	.8493	-.7836	-.3576	1.8750	.8820	.8988	16.49
2.02	1.0251	-.7443	-.2978	.7389	.1102	-.0844	1.0302	-.7595	-.3016	1.8754	.8843	.9012	16.50
4.00	1.2039	-.7147	-.2536	.8875	.1318	-.0396	1.2087	-.7273	-.2568	1.8750	.8868	.9037	16.49
6.01	1.4019	-.6786	-.1949	1.0436	.1661	.0251	1.4017	-.6781	-.1947	1.8988	.9006	.9175	16.97
8.00	1.5250	-.6151	-.1534	1.1403	.2130	.0652	1.5267	-.6186	-.1543	1.8966	.8962	.9131	16.92
9.99	1.6515	-.5441	-.1062	1.2389	.2690	.1120	1.6538	-.5487	-.1074	1.8960	.8949	.9118	16.91
11.98	1.7957	-.4577	-.0532	1.3542	.3432	.1655	1.7969	-.4599	-.0538	1.8949	.8976	.9146	16.89
13.99	1.9596	-.3511	-.0292	1.4888	.4349	.1902	1.9600	-.3517	-.0294	1.8970	.8993	.9163	16.93
16.00	2.1093	-.2406	.0132	1.6139	.5263	.2314	2.1115	-.2440	.0122	1.8933	.8961	.9130	16.86
17.99	2.3023	-.1119	.0772	1.7811	.6383	.2952	2.3043	-.1148	.0764	1.8903	.8966	.9135	16.79
20.00	2.4167	.0103	.1414	1.8742	.7359	.3575	2.4233	.0015	.1388	1.8895	.8891	.9060	16.78
22.01	2.5225	.1269	.2133	1.9531	.8355	.4301	2.5275	.1206	.2114	1.8890	.8921	.9089	16.77
23.99	2.6020	.2451	.2830	2.0100	.9327	.4992	2.6083	.2378	.2807	1.8875	.8905	.9074	16.74

TABLE 5.- CONTINUED.

VEO-WING 1/10-SCALE RESEARCH MODEL, VSTOL TEST NO. 204

ALPHA	CL	CD	CPM	CLE2	CDE2	CME2	CLCT	CDCT	CMCT	NPR	CT	CTRF	THETAJ
RUN = 547													
-3.64	.8065	-1.8877	-.7463	.2546	.0617	-.2294	.8100	-1.9000	-.7496	3.1376	1.9875	2.0260	19.45
-2.02	.9926	-1.8749	-.7069	.3841	.0626	-.1887	.9950	-1.8825	-.7089	3.1377	1.9922	2.0308	19.45
-.00	1.2115	-1.8492	-.6579	.5340	.0692	-.1388	1.2129	-1.8532	-.6590	3.1372	1.9959	2.0346	19.45
2.00	1.4169	-1.8064	-.6068	.6748	.0832	-.0892	1.4200	-1.8144	-.6089	3.1311	1.9916	2.0301	19.44
4.01	1.6309	-1.7550	-.5551	.8267	.1003	-.0400	1.6375	-1.7701	-.5593	3.1252	1.9838	2.0220	19.43
6.02	1.8411	-1.6967	-.5039	.9713	.1303	.0119	1.8476	-1.7104	-.5077	3.1294	1.9851	2.0234	19.44
8.02	2.0174	-1.6266	-.4563	1.0819	.1741	.0609	2.0217	-1.6349	-.4587	3.1290	1.9909	2.0293	19.44
10.01	2.1893	-1.5380	-.4042	1.1926	.2274	.1125	2.1949	-1.5479	-.4071	3.1282	1.9889	2.0273	19.43
12.03	2.3348	-1.4309	-.3521	1.2807	.2914	.1626	2.3449	-1.4475	-.3570	3.1286	1.9810	2.0193	19.43
14.00	2.5533	-1.3040	-.3226	1.4405	.3813	.1921	2.5638	-1.3199	-.3274	3.1276	1.9814	2.0196	19.43
15.98	2.7582	-1.1691	-.2798	1.5889	.4755	.2344	2.7702	-1.1860	-.2850	3.1262	1.9797	2.0179	19.43
18.01	2.9747	-1.0231	-.2173	1.7432	.5853	.2988	2.9825	-1.0333	-.2206	3.1256	1.9874	2.0257	19.43
20.01	3.1486	-.8694	-.1377	1.8655	.6908	.3769	3.1604	-.8837	-.1424	3.1253	1.9818	2.0200	19.43
22.01	3.2614	-.7301	-.0713	1.9254	.7834	.4429	3.2744	-.7449	-.0763	3.1236	1.9807	2.0138	19.43
24.04	3.3880	-.5646	.0123	2.0081	.8913	.5232	3.3403	-.5143	.0299	3.1238	1.9681	2.0060	19.43
RUN = 548													
-3.76	.1404	.0507	-.2394	.1404	.0507	-.2394	.1404	.0507	-.2394	1.0003	0.0000	0.0000	0.00
-2.02	.3036	.0450	-.1516	.3036	.0450	-.1516	.3036	.0450	-.1516	1.0005	0.0000	0.0000	0.00
.02	.4561	.0493	-.0623	.4561	.0493	-.0623	.4561	.0493	-.0623	1.0002	0.0000	0.0000	0.00
1.99	.6047	.0600	.0206	.6047	.0600	.0206	.6047	.0600	.0206	1.0005	0.0000	0.0000	0.00
4.00	.7579	.0814	.1135	.7579	.0814	.1135	.7579	.0814	.1135	1.0000	0.0000	0.0000	0.00
5.99	.9204	.1091	.2133	.9204	.1091	.2133	.9204	.1091	.2133	1.0000	0.0000	0.0000	0.00
7.99	1.0883	.1528	.3103	1.0883	.1528	.3103	1.0883	.1528	.3103	1.0000	0.0000	0.0000	0.00
10.00	1.2404	.2034	.4000	1.2404	.2034	.4000	1.2404	.2034	.4000	1.0000	0.0000	0.0000	0.00
12.00	1.4121	.2701	.4981	1.4121	.2701	.4981	1.4121	.2701	.4981	1.0000	0.0000	0.0000	0.00
13.99	1.5584	.3459	.5862	1.5584	.3459	.5862	1.5584	.3459	.5862	1.0009	0.0000	0.0000	0.00
16.00	1.6833	.4345	.6633	1.6833	.4345	.6633	1.6833	.4345	.6633	1.0017	0.0000	0.0000	0.00
17.98	1.8123	.5298	.7420	1.8123	.5298	.7420	1.8123	.5298	.7420	1.0012	0.0000	0.0000	0.00
19.98	1.9029	.6353	.7985	1.9029	.6353	.7985	1.9029	.6353	.7985	1.0006	0.0000	0.0000	0.00
22.00	1.9877	.7372	.8779	1.9877	.7372	.8779	1.9877	.7372	.8779	1.0000	0.0000	0.0000	0.00
23.97	2.0454	.8352	.9515	2.0454	.8352	.9515	2.0454	.8352	.9515	1.0000	0.0000	0.0000	0.00

TABLE 5.- CONTINUED.

VFO-WING 1/10-SCALE RESEARCH MODEL,VSTOL TEST NO. 204

ALPHA	CL	CD	CPM	CLE2	CDE2	CME2	CLCT	CDCT	CMCT	NPR	CT	CTRF	THETAJ
RUN = 549													
-3.71	.3385	-.4395	-.3734	.2387	.0544	-.2570	.3401	-.4474	-.3752	1.4465	.4921	.5038	15.13
-1.99	.5116	-.4350	-.2901	.3974	.0525	-.1743	.5141	-.4459	-.2927	1.4424	.4891	.5007	15.17
.03	.6923	-.4286	-.2086	.5601	.0619	-.0914	.6933	-.4323	-.2095	1.4532	.4963	.5080	15.06
2.01	.8761	-.4110	-.1192	.7270	.0742	-.0021	.8773	-.4150	-.1202	1.4527	.4958	.5076	15.07
4.00	1.0624	-.3817	-.0259	.8963	.0988	.0914	1.0635	-.3849	-.0267	1.4528	.4967	.5085	15.06
6.00	1.2367	-.3410	.0658	1.0542	.1326	.1829	1.2382	-.3450	.0649	1.4525	.4959	.5076	15.07
8.01	1.4197	-.2837	.1518	1.2212	.1820	.2686	1.4219	-.2889	.1505	1.4521	.4945	.5062	15.07
9.99	1.6201	-.2178	.2566	1.4052	.2415	.3736	1.6221	-.2221	.2555	1.4518	.4954	.5071	15.07
12.00	1.7952	-.1381	.3439	1.5634	.3156	.4664	1.7962	-.1401	.3484	1.4535	.4977	.5095	15.06
14.02	1.9692	-.0379	.4457	1.7220	.4063	.5630	1.9709	-.0409	.4449	1.4513	.4966	.5084	15.08
15.99	2.1228	.0662	.5310	1.8600	.5025	.6484	2.1241	.0640	.5304	1.4527	.4975	.5092	15.07
18.01	2.2617	.1782	.5920	1.9832	.6057	.7097	2.2626	.1768	.5916	1.4530	.4984	.5102	15.06
19.99	2.4022	.3097	.6550	2.1094	.7270	.7726	2.4034	.3080	.6545	1.4525	.4980	.5097	15.07
21.99	2.5259	.4393	.7274	2.2190	.8459	.8449	2.5273	.4374	.7268	1.4533	.4977	.5095	15.06
23.99	2.5928	.5657	.8013	2.2716	.9618	.9190	2.5940	.5643	.8009	1.4536	.4982	.5099	15.06
RUN = 550													
-3.67	.5345	-.7965	-.4666	.3278	.0899	-.2494	.5361	-.8032	-.4682	1.8901	.8933	.9102	16.79
-1.93	.6709	-.7886	-.4116	.4366	.0936	-.1938	.6720	-.7927	-.4127	1.8904	.8958	.9128	16.80
-.03	.8617	-.7739	-.3318	.5975	.1019	-.1134	.8623	-.7760	-.3323	1.8914	.8978	.9148	16.82
1.98	1.0536	-.7450	-.2447	.7616	.1179	-.0277	1.0556	-.7508	-.2461	1.8868	.8940	.9110	16.72
4.14	1.2908	-.7075	-.1311	.9659	.1448	.0862	1.2925	-.7121	-.1323	1.8871	.8951	.9121	16.73
6.01	1.4606	-.6532	-.0472	1.1113	.1819	.1682	1.4652	-.6642	-.0501	1.8851	.8883	.9052	16.69
8.03	1.7131	-.5875	.0619	1.3343	.2358	.2775	1.7176	-.5973	.0593	1.8845	.8894	.9063	16.68
9.98	1.8723	-.5127	.1351	1.4666	.2976	.3503	1.8771	-.5225	.1325	1.8810	.8893	.9062	16.61
12.04	2.0995	-.4131	.2517	1.6665	.3806	.4663	2.1057	-.4245	.2486	1.8794	.8872	.9041	16.58
14.03	2.2555	-.3122	.3342	1.7956	.4660	.5486	2.2623	-.3236	.3311	1.8783	.8870	.9039	16.56
15.99	2.4137	-.1904	.4184	1.9290	.5699	.6321	2.4221	-.2035	.4147	1.8768	.8848	.9016	16.53
18.00	2.6008	-.0685	.4876	2.0809	.6802	.7051	2.6040	-.0730	.4863	1.8895	.8946	.9115	16.78
19.99	2.7276	.0721	.5494	2.1811	.9033	.7672	2.7302	.0688	.5484	1.8899	.8959	.9128	16.79
22.01	2.8952	.2251	.6342	2.3148	.9360	.8514	2.8887	.2208	.6329	1.8876	.8946	.9115	16.74
24.01	2.9606	.3644	.6954	2.3676	1.0520	.9119	2.9665	.3575	.6932	1.8887	.8911	.9080	16.76

TABLE 5.- CONTINUED.

VEO-WING 1/10-SCALE RESEARCH MODEL, VSTOL TEST NO. 204

ALPHA	CL	CD	CPM	CLE2	CDE2	CME2	CLCT	CDCT	CMCT	NPR	CT	CTRF	THETAJ
RUN = 551													
-3.65	.7056	-1.3974	-.6587	.2569	.0660	-.2554	.7037	-1.3913	-.6570	2.5875	1.5063	1.5307	20.70
-1.99	.9081	-1.3880	-.5811	.4159	.0655	-.1768	.9048	-1.3782	-.5784	2.5884	1.5102	1.5346	20.70
.03	1.1132	-1.3434	-.4912	.5765	.0726	-.0925	1.1167	-1.3527	-.4938	2.5617	1.4902	1.5143	20.73
2.02	1.3194	-1.3019	-.4066	.7368	.0871	-.0100	1.3264	-1.3185	-.4113	2.5614	1.4823	1.5062	20.73
4.02	1.5512	-1.2622	-.3073	.9174	.1126	.0913	1.5556	-1.2716	-.3100	2.5616	1.4898	1.5139	20.73
6.02	1.7638	-1.1965	-.2127	1.0849	.1505	.1844	1.7709	-1.2106	-.2169	2.5576	1.4845	1.5084	20.73
8.01	1.9912	-1.1189	-.1243	1.2670	.2015	.2722	2.0000	-1.1349	-.1291	2.5583	1.4820	1.5059	20.73
10.01	2.2274	-1.0309	-.0234	1.4559	.2664	.3740	2.2350	-1.0437	-.0273	2.5579	1.4854	1.5093	20.73
12.02	2.4415	-.9196	.0763	1.6278	.3451	.4722	2.4525	-.9367	.0709	2.5560	1.4800	1.5039	20.74
14.02	2.6653	-.7954	.1854	1.8072	.4413	.5816	2.6761	-.8110	.1804	2.5562	1.4814	1.5053	20.74
16.01	2.8288	-.6645	.2605	1.9304	.5385	.6557	2.8424	-.6827	.2545	2.5523	1.4776	1.5015	20.74
17.98	2.9874	-.5289	.3158	2.0487	.6418	.7107	3.0021	-.5474	.3095	2.5505	1.4768	1.5006	20.74
19.99	3.1783	-.3607	.3985	2.2017	.7733	.7924	3.1963	-.3816	.3912	2.5475	1.4728	1.4966	20.74
22.01	3.3178	-.1971	.4586	2.3023	.9011	.8523	3.3371	-.2180	.4512	2.5469	1.4720	1.4958	20.75
24.00	3.4561	-.0258	.5339	2.4027	1.0369	.9277	3.4757	-.0457	.5266	2.5446	1.4725	1.4963	20.75
RUN = 552													
-3.63	.8244	-1.8951	-.7775	.2721	.0556	-.2606	.8275	-1.9059	-.7803	3.1308	1.9890	2.0274	19.44
-2.00	.9861	-1.8674	-.7146	.3319	.0574	-.2008	.9925	-1.8876	-.7200	3.1242	1.9793	2.0174	19.43
-.02	1.2379	-1.8387	-.6226	.5631	.0632	-.1093	1.2452	-1.8595	-.6282	3.1191	1.9734	2.0164	19.42
2.00	1.4556	-1.8076	-.5444	.7255	.0783	-.0284	1.4702	-1.8193	-.5476	3.1226	1.9877	2.0260	19.42
3.99	1.6948	-1.7422	-.4458	.8962	.1022	.0660	1.7062	-1.7684	-.4531	3.1215	1.9719	2.0098	19.42
6.01	1.9363	-1.6767	-.3435	1.0740	.1369	.1676	1.9492	-1.7040	-.3512	3.1184	1.9703	2.0082	19.41
8.01	2.2142	-1.6026	-.2413	1.2838	.1899	.2730	2.2229	-1.6194	-.2461	3.1212	1.9815	2.0196	19.42
9.98	2.4048	-1.5098	-.1654	1.4157	.2462	.3476	2.4161	-1.5298	-.1712	3.1177	1.9775	2.0155	19.41
12.01	2.6522	-1.3962	-.0519	1.6006	.3241	.4615	2.6637	-1.4152	-.0576	3.1217	1.9782	2.0163	19.42
14.00	2.8555	-1.2644	.0386	1.7482	.4137	.5504	2.8709	-1.2877	.0314	3.1200	1.9726	2.0105	19.42
16.01	3.0720	-1.1269	.1293	1.9021	.5177	.6432	3.0837	-1.1433	.1241	3.1212	1.9802	2.0183	19.42
17.99	3.2421	-.9751	.1884	2.0190	.6235	.7011	3.2577	-.9955	.1819	3.1233	1.9748	2.0128	19.42
19.97	3.4182	-.8151	.2551	2.1394	.7425	.7681	3.4329	-.8330	.2492	3.1194	1.9773	2.0153	19.42
22.01	3.5918	-.6481	.3286	2.2498	.8723	.8450	3.5988	-.6560	.3259	3.1215	1.9897	2.0279	19.42
24.01	3.7290	-.4599	.3963	2.3408	1.0061	.9105	3.7424	-.4741	.3914	3.1228	1.9809	2.0190	19.42
RUN = 553													
7.99	1.0865	.1701	.2981	1.0865	.1701	.2981	1.0865	.1701	.2981	1.0000	0.0000	0.0000	0.00
8.00	1.1262	.0856	.2773	1.0813	.1746	.3004	1.1273	.0833	.2767	1.0379	.0975	.0996	18.73
8.01	1.2421	-.0230	.2293	1.1579	.1586	.2766	1.2442	-.0275	.2281	1.1362	.1951	.2001	16.87
7.98	1.3869	-.2104	.1655	1.2204	.1620	.2615	1.3877	-.2123	.1650	1.3461	.3981	.4080	16.10
8.01	1.6016	-.5163	.0767	1.2877	.2202	.2598	1.6077	-.5306	.0731	1.7675	.7848	.8006	15.08
8.02	1.9169	-.8631	-.0478	1.3177	.2240	.2769	1.9081	-.8435	-.0420	2.2647	1.2220	1.2422	20.93
8.02	2.0389	-1.1978	-.1523	1.2740	.2092	.2686	2.0507	-1.2195	-.1588	2.6777	1.5757	1.6015	20.51
8.02	2.1765	-1.5754	-.2488	1.2542	.2022	.2605	2.1460	-1.5166	-.2319	3.1121	1.9650	2.0026	19.40
8.02	2.6734	-2.6747	-.5230	1.2455	.2200	.2725	2.6510	-2.6293	-.5105	3.5398	3.1494	3.2277	18.24
8.00	3.4193	-4.1657	-.9466	1.2549	.2265	.2600	3.4295	-4.1862	-.9523	3.5404	4.7776	4.8965	18.24

TABLE 5.- CONTINUED.

VEO-WING 1/10-SCALE RESEARCH MODEL,VSTOL TEST NO. 204

ALPHA	CL	CD	CPM	CLE2	CDE2	CME2	CLCT	CDCT	CMCT	NPR	CT	CTRF	THETAJ
RUN = 554													
-3.65	.2031	.0798	-.0054	.2031	.0798	-.0054	.2031	.0798	-.0054	1.0012	0.0000	0.0000	0.00
-2.02	.3092	.0843	.0660	.3092	.0843	.0660	.3092	.0843	.0660	1.0017	0.0000	0.0000	0.00
.07	.4552	.0952	.1578	.4552	.0952	.1578	.4552	.0952	.1578	1.0021	0.0000	0.0000	0.00
2.00	.6198	.1162	.2486	.6198	.1162	.2486	.6198	.1162	.2486	1.0021	0.0000	0.0000	0.00
4.04	.7886	.1539	.3459	.7886	.1539	.3459	.7886	.1539	.3459	1.0023	0.0000	0.0000	0.00
6.02	.9567	.2001	.4308	.9567	.2001	.4308	.9567	.2001	.4308	1.0023	0.0000	0.0000	0.00
8.05	1.1143	.2580	.5134	1.1143	.2580	.5134	1.1143	.2580	.5134	1.0020	0.0000	0.0000	0.00
10.05	1.2778	.3316	.6115	1.2778	.3316	.6115	1.2778	.3316	.6115	1.0013	0.0000	0.0000	0.00
11.96	1.4119	.4038	.6938	1.4119	.4038	.6938	1.4119	.4038	.6938	1.0010	0.0000	0.0000	0.00
14.00	1.5248	.4748	.7732	1.5248	.4748	.7732	1.5248	.4748	.7732	1.0005	0.0000	0.0000	0.00
15.99	1.6608	.5499	.8461	1.6608	.5499	.8461	1.6608	.5499	.8461	1.0000	0.0000	0.0000	0.00
18.04	1.7426	.6369	.9406	1.7426	.6369	.9406	1.7426	.6369	.9406	1.0000	0.0000	0.0000	0.00
20.03	1.8075	.7268	1.0115	1.8075	.7268	1.0115	1.8075	.7268	1.0115	1.0000	0.0000	0.0000	0.00
22.04	1.8388	.8149	1.0447	1.8388	.8149	1.0447	1.8388	.8149	1.0447	1.0000	0.0000	0.0000	0.00
24.08	1.9197	.9305	1.0903	1.9197	.9305	1.0903	1.9197	.9305	1.0903	1.0000	0.0000	0.0000	0.00
RUN = 555													
-3.58	.4575	-.3821	-.1113	.3472	.0940	.0009	.4586	-.3869	-.1124	1.4935	.4951	.4887	16.62
-1.97	.5676	-.3688	-.0628	.4443	.1031	.0491	.5691	-.3745	-.0642	1.4930	.4940	.4878	16.62
.03	.7799	-.3484	.0226	.6401	.1188	.1345	.7815	-.3538	.0213	1.4956	.4942	.4876	16.63
2.06	1.0047	-.3125	.1166	.8479	.1509	.2289	1.0060	-.3164	.1157	1.4951	.4958	.4892	16.63
4.02	1.1705	-.2642	.2064	.9978	.1941	.3188	1.1718	-.2676	.2056	1.4944	.4963	.4898	16.63
6.03	1.3466	-.2006	.3052	1.1581	.2509	.4175	1.3482	-.2044	.3042	1.4949	.4958	.4893	16.63
7.99	1.5376	-.1226	.4121	1.3340	.3219	.5243	1.5394	-.1267	.4110	1.4946	.4955	.4889	16.62
10.09	1.7135	-.0381	.4875	1.4933	.3992	.5998	1.7152	-.0417	.4865	1.4933	.4960	.4896	16.62
12.01	1.8750	.0531	.5711	1.6410	.4818	.6832	1.8776	.0485	.5699	1.4931	.4947	.4884	16.62
13.99	2.0450	.1548	.6604	1.7963	.5752	.7725	2.0475	.1504	.6592	1.4931	.4949	.4885	16.61
16.03	2.2059	.2674	.7485	1.9427	.6782	.8604	2.2090	.2624	.7471	1.4919	.4940	.4878	16.61
18.07	2.3783	.3842	.8363	2.1007	.7856	.9483	2.3816	.3795	.8350	1.4913	.4942	.4881	16.60
20.03	2.4949	.5032	.9174	2.2061	.8918	1.0286	2.5008	.4954	.9152	1.4903	.4901	.4842	16.60
22.04	2.6269	.6337	1.0046	2.3225	1.0147	1.1165	2.6310	.6287	1.0031	1.4895	.4935	.4877	16.59
24.06	2.7389	.7793	1.1044	2.4231	1.1472	1.2156	2.7449	.7722	1.1022	1.4885	.4906	.4849	16.58

TABLE 5.- CONTINUED.

VED-WING 1/10-SCALE RESEARCH MODEL, VSTOL TEST NO. 204

ALPHA	CL	CD	CPM	CLE2	CDE2	CME2	CLCT	CDCT	CMCT	NPR	CT	CTRF	THETAJ
RUN = 556													
-3.58	.6596	-.7121	-.2306	.4319	.1151	-.0339	.6539	-.6916	-.2257	1.9486	.9229	.8580	18.96
-2.02	.8360	-.6984	-.1598	.5861	.1219	.0368	.8300	-.6787	-.1551	1.9455	.9222	.8575	18.96
.01	1.0515	-.6699	-.0858	.7723	.1427	.1111	1.0443	-.6488	-.0807	1.9445	.9240	.8592	18.95
2.03	1.2542	-.6142	-.0055	.9505	.1781	.1890	1.2501	-.6035	-.0029	1.9417	.9123	.8485	18.95
4.03	1.4609	-.5566	.0942	1.1284	.2273	.2894	1.4552	-.5430	.0975	1.9460	.9158	.8515	18.96
6.02	1.6442	-.4802	.2174	1.2866	.2877	.4116	1.6399	-.4710	.2197	1.9448	.9109	.8471	18.95
7.99	1.8448	-.3982	.3128	1.4588	.3610	.5080	1.8380	-.3850	.3162	1.9464	.9159	.8517	18.96
10.07	2.0998	-.2940	.4157	1.6859	.4518	.6112	2.0920	-.2799	.4194	1.9458	.9174	.8530	18.96
12.00	2.2516	-.1924	.4782	1.8133	.5384	.6735	2.2438	-.1793	.4817	1.9453	.9164	.8521	18.96
13.98	2.4400	-.0733	.5588	1.9767	.6417	.7541	2.4318	-.0607	.5623	1.9450	.9162	.8520	18.96
16.07	2.6391	.0580	.6344	2.1480	.7588	.8306	2.6284	.0734	.6387	1.9444	.9201	.8557	18.95
18.03	2.8337	.2001	.7215	2.3180	.8847	.9180	2.8215	.2162	.7262	1.9439	.9217	.8572	18.95
20.01	2.9816	.3435	.8086	2.4457	1.0062	1.0040	2.9720	.3554	.8121	1.9440	.9165	.8523	18.95
22.13	3.1634	.5088	.9144	2.6011	1.1536	1.1105	3.1512	.5228	.9187	1.9447	.9200	.8556	18.96
24.04	3.2979	.6657	1.0027	2.7137	1.2925	1.1991	3.2844	.6803	1.0072	1.9439	.9214	.8568	18.95
RUN = 557													
-3.52	.8739	-1.2195	-.3813	.5045	.1110	-.0645	.8668	-1.1939	-.3752	2.6224	1.5295	1.3809	19.04
-1.96	1.0581	-1.2058	-.3185	.6505	.1215	.0000	1.0480	-1.1730	-.3106	2.6257	1.5390	1.3885	19.04
.01	1.2375	-1.1684	-.2452	.8338	.1458	.0737	1.2757	-1.1343	-.2370	2.6231	1.5400	1.3904	19.04
1.96	1.5022	-1.1164	-.1675	1.0045	.1809	.1513	1.4896	-1.0835	-.1594	2.6222	1.5390	1.3895	19.04
4.04	1.7699	-1.0381	-.0610	1.2278	.2345	.2563	1.7585	-1.0114	-.0543	2.6239	1.5321	1.3832	19.04
6.01	1.9321	-.9580	.0529	1.3465	.2951	.3702	1.9198	-.9317	.0595	2.6242	1.5321	1.3831	19.04
8.07	2.2077	-.8551	.1910	1.5753	.3802	.5094	2.1925	-.8254	.1987	2.6205	1.5370	1.3877	19.04
10.09	2.4273	-.7462	.2802	1.7514	.4670	.5988	2.4105	-.7161	.2881	2.6227	1.5382	1.3888	19.04
11.99	2.6151	-.6230	.3535	1.9040	.5592	.6750	2.6020	-.6013	.3643	2.6212	1.5281	1.3797	19.04
14.04	2.8097	-.4885	.4251	2.0570	.6672	.7415	2.7961	-.4676	.4308	2.6208	1.5276	1.3792	19.04
16.06	3.0480	-.3409	.4982	2.2525	.7910	.8156	3.0312	-.3170	.5049	2.6209	1.5323	1.3834	19.04
18.11	3.2685	-.1846	.5776	2.4325	.9189	.8952	3.2504	-.1606	.5845	2.6206	1.5333	1.3844	19.04
20.11	3.4501	-.0175	.6639	2.5774	1.0548	.9811	3.4322	.0046	.6705	2.6264	1.5315	1.3826	19.04
22.05	3.6489	.1432	.7633	2.7338	1.1929	1.0827	3.6235	.1724	.7722	2.6338	1.5428	1.3925	19.04
24.07	3.8177	.3356	.8584	2.8695	1.3489	1.1768	3.7946	.3603	.8662	2.6317	1.5375	1.3878	19.04

TABLE 5.- CONTINUED.

VEO-WING 1/10-SCALE RESEARCH MODEL, VSTOL TEST NO. 204

ALPHA	CL	CD	CPM	CLE2	CDE2	CME2	CLCT	CDCT	CMCT	NPR	CT	CTRF	THETAJ
RUN = 558													
-3.50	1.0117	-1.6604	-.5229	.5062	.1031	-.0825	.9995	-1.6177	-.5123	3.2060	2.0496	1.8345	19.50
-2.07	1.1696	-1.6338	-.4655	.6224	.1112	-.0271	1.1581	-1.5971	-.4563	3.1975	2.0430	1.8288	19.48
.01	1.4552	-1.5945	-.3764	.8425	.1356	.0641	1.4401	-1.5518	-.3656	3.2046	2.0505	1.8353	19.49
2.03	1.7013	-1.5362	-.2898	1.0265	.1748	.1516	1.6833	-1.4906	-.2780	3.2017	2.0548	1.8393	19.49
4.07	1.9825	-1.4451	-.1834	1.2510	.2320	.2557	1.9667	-1.4089	-.1739	3.2030	2.0442	1.8298	19.49
6.04	2.1864	-1.3577	-.0321	1.3953	.2988	.4084	2.1669	-1.3169	-.0212	3.2001	2.0505	1.8357	19.49
8.05	2.4173	-1.2597	.0725	1.5650	.3748	.5147	2.3927	-1.2126	.0852	3.2018	2.0594	1.8434	19.49
10.07	2.6232	-1.1343	.1593	1.7198	.4580	.5980	2.6033	-1.0991	.1680	3.2064	2.0452	1.8307	19.50
12.03	2.8553	-1.0133	.2523	1.8954	.5522	.6928	2.8312	-.9739	.2634	3.2013	2.0516	1.8364	19.49
13.98	3.0505	-.8770	.3236	2.0403	.6510	.7632	3.0276	-.8424	.3336	3.2030	2.0463	1.8317	19.49
15.99	3.2826	-.7233	.3932	2.2199	.7677	.8326	3.2589	-.6901	.4030	3.2025	2.0456	1.8310	19.49
18.05	3.4954	-.5623	.4540	2.3791	.8905	.8936	3.4698	-.5290	.4641	3.2025	2.0470	1.8322	19.49
20.08	3.7383	-.3869	.5596	2.5640	1.0341	1.0020	3.7043	-.3459	.5724	3.2027	2.0595	1.8435	19.49
22.02	3.9167	-.2187	.6408	2.6901	1.1669	1.0851	3.8767	-.1735	.6553	3.2060	2.0674	1.8505	19.50
24.01	4.1313	-.0081	.7460	2.8676	1.3239	1.1864	4.0998	.0252	.7569	3.2016	2.0512	1.8360	19.49
RUN = 559													
8.02	1.0969	.2771	.4801	1.0969	.2771	.4801	1.0969	.2771	.4801	1.0000	0.0000	0.0000	0.00
8.02	1.1600	.2024	.4629	1.1108	.2906	.4886	1.1108	.2906	.4886	1.0578	.0532	.1009	21.09
8.05	1.2925	.1184	.4384	1.2098	.2923	.4830	1.2632	.1800	.4542	1.1472	.1548	.1926	17.38
7.98	1.4675	-.0343	.4001	1.3128	.3175	.4880	1.4780	-.0582	.3941	1.3683	.3746	.3843	15.76
8.05	1.8111	-.3065	.3321	1.4687	.3750	.5070	1.8059	-.2961	.3348	1.8310	.8124	.7627	18.63
8.03	2.0358	-.6093	.2449	1.5259	.3862	.5016	2.0251	-.5885	.2503	2.2839	1.2256	1.1185	19.10
8.00	2.2017	-.9223	.1608	1.5366	.3822	.4965	2.1912	-.9016	.1661	2.7339	1.6258	1.4642	19.01
8.03	2.3819	-1.2390	.0760	1.5395	.3797	.5131	2.3660	-1.2085	.0842	3.1937	2.0384	1.8247	19.47
8.05	2.8588	-2.0500	-.1255	1.5939	.3923	.5374	2.8686	-2.0691	-.1307	3.4702	3.0760	2.7504	19.33
8.04	2.8598	-2.1726	-.1539	1.5541	.3826	.5302	2.8559	-2.1648	-.1518	3.5975	3.2097	2.8695	19.03
7.98	3.5956	-3.4392	-.5356	1.6332	.4044	.4944	3.5846	-3.4177	-.5299	3.5747	4.8269	4.3156	19.06

TABLE 5.- CONTINUED.

VED-WING 1/10-SCALE RESEARCH MODEL, VSTOL TEST NO. 204

ALPHA	CL	CD	CPM	CLE2	CDE2	CME2	CLCT	CDCT	CMCT	NPR	CT	CTRF	THETAJ
RUN = 560													
-3.79	-.0140	.1373	-.4774	-.0140	.1373	-.4774	-.0140	.1373	-.4774	1.0005	0.0000	0.0000	0.00
-2.00	.1590	.1103	-.3780	.1590	.1103	-.3780	.1590	.1103	-.3780	1.0021	0.0000	0.0000	0.00
.01	.3214	.0947	-.2801	.3214	.0947	-.2801	.3214	.0947	-.2801	1.0021	0.0000	0.0000	0.00
2.03	.4496	.0938	-.2075	.4496	.0938	-.2075	.4496	.0938	-.2075	1.0014	0.0000	0.0000	0.00
4.00	.5971	.1047	-.1298	.5971	.1047	-.1298	.5971	.1047	-.1298	1.0009	0.0000	0.0000	0.00
5.95	.7419	.1198	-.0409	.7419	.1198	-.0409	.7419	.1198	-.0409	1.0000	0.0000	0.0000	0.00
7.99	.8986	.1522	.0448	.8986	.1522	.0448	.8986	.1522	.0448	1.0000	0.0000	0.0000	0.00
10.04	1.0621	.1969	.1403	1.0621	.1969	.1403	1.0621	.1969	.1403	1.0000	0.0000	0.0000	0.00
12.04	1.2054	.2534	.2373	1.2054	.2534	.2373	1.2054	.2534	.2373	1.0000	0.0000	0.0000	0.00
14.02	1.3162	.3134	.3224	1.3162	.3134	.3224	1.3162	.3134	.3224	1.0000	0.0000	0.0000	0.00
16.00	1.4280	.3847	.4167	1.4280	.3847	.4167	1.4280	.3847	.4167	1.0000	0.0000	0.0000	0.00
18.02	1.5371	.4588	.5177	1.5371	.4588	.5177	1.5371	.4588	.5177	1.0000	0.0000	0.0000	0.00
20.00	1.6320	.5332	.6203	1.6320	.5332	.6203	1.6320	.5332	.6203	1.0000	0.0000	0.0000	0.00
21.95	1.7290	.6114	.7323	1.7290	.6114	.7323	1.7290	.6114	.7323	1.0000	0.0000	0.0000	0.00
23.95	1.8211	.7019	.8249	1.8211	.7019	.8249	1.8211	.7019	.8249	1.0000	0.0000	0.0000	0.00
RUN = 561													
-3.80	.2165	-.3314	-.5793	.1107	.1357	-.4694	.2199	-.3466	-.5829	1.4855	.4843	.4790	16.56
-1.99	.3740	-.3463	-.5085	.2528	.1206	-.3978	.3771	-.3582	-.5113	1.4840	.4876	.4825	16.55
-.01	.5344	-.3491	-.4295	.3973	.1127	-.3190	.5381	-.3615	-.4325	1.4845	.4869	.4817	16.55
2.04	.7195	-.3452	-.3390	.5664	.1099	-.2288	.7241	-.3590	-.3424	1.4840	.4853	.4802	16.55
4.00	.8950	-.3280	-.2530	.7266	.1214	-.1429	.9002	-.3419	-.2564	1.4833	.4849	.4799	16.54
5.99	1.0355	-.3006	-.1604	.9019	.1419	-.0504	1.0915	-.3151	-.1640	1.4838	.4842	.4791	16.55
8.02	1.2752	-.2563	-.0686	1.0761	.1792	.0413	1.2818	-.2706	-.0722	1.4845	.4840	.4788	16.55
9.98	1.5075	-.1919	.0075	1.2940	.2363	.1173	1.5150	-.2069	.0037	1.4804	.4831	.4785	16.53
12.04	1.7039	-.1217	.0838	1.4756	.2975	.1933	1.7123	-.1374	.0797	1.4801	.4819	.4773	16.52
13.99	1.9260	-.0429	.1641	1.6834	.3688	.2737	1.9349	-.0579	.1600	1.4795	.4824	.4779	16.52
16.00	2.1170	.0554	.2268	1.8606	.4578	.3363	2.1269	.0400	.2226	1.4784	.4815	.4771	16.51
17.94	2.3269	.1593	.3142	2.0568	.5531	.4237	2.3370	.1446	.3101	1.4793	.4820	.4775	16.51
20.02	2.5175	.2806	.3966	2.2325	.6653	.5064	2.5274	.2673	.3928	1.4786	.4833	.4788	16.51
21.97	2.6474	.3944	.5046	2.3505	.7679	.6141	2.6588	.3801	.5004	1.4785	.4815	.4771	16.51
23.99	2.7150	.5079	.6269	2.4052	.8707	.7364	2.7270	.4939	.6227	1.4781	.4814	.4770	16.50

TABLE 5.- CONTINUED.

VED-WING 1/10-SCALE RESEARCH MODEL,VSTOL TEST NO. 204

ALPHA	CL	CD	CPM	CLE2	CDE2	CME2	CLCT	CDCT	CMCT	NPR	CT	CTRF	THETAJ
RUN = 562													
-3.76	.4042	-.6553	-.6712	.1856	.1524	-.4794	.4046	-.6566	-.6715	1.9251	.8985	.8368	18.91
-2.07	.5709	-.6717	-.6031	.3255	.1380	-.4092	.5684	-.6635	-.6012	1.9356	.9092	.8461	18.93
-.01	.7916	-.6729	-.5135	.5163	.1304	-.3188	.7878	-.6617	-.5108	1.9364	.9127	.8492	18.93
2.06	.9969	-.6605	-.4254	.6925	.1329	-.2306	.9926	-.6492	-.4226	1.9352	.9130	.8497	18.93
4.00	1.1804	-.6287	-.3553	.8503	.1512	-.1612	1.1767	-.6201	-.3531	1.9367	.9101	.8468	18.94
6.01	1.4016	-.5897	-.2643	1.0451	.1769	-.0705	1.3983	-.5825	-.2625	1.9359	.9085	.8454	18.93
8.00	1.5982	-.5351	-.2070	1.2155	.2180	-.0134	1.5948	-.5285	-.2053	1.9372	.9080	.8448	18.94
10.02	1.8713	-.4678	-.1304	1.4602	.2753	.0643	1.8656	-.4575	-.1277	1.9380	.9127	.8492	18.94
12.05	2.1194	-.3776	-.0538	1.6832	.3488	.1404	2.1143	-.3692	-.0516	1.9359	.9105	.8473	18.93
13.99	2.3453	-.2867	.0151	1.8835	.4265	.2099	2.3387	-.2764	.0179	1.9364	.9132	.8498	18.94
16.01	2.5998	-.1687	.0937	2.1142	.5263	.2881	2.5939	-.1603	.0961	1.9354	.9111	.8478	18.93
18.01	2.8767	-.0345	.1867	2.3647	.6462	.3820	2.8681	-.0232	.1900	1.9360	.9153	.8518	18.93
20.03	3.0544	.1142	.2556	2.5242	.7696	.4488	3.0509	.1184	.2568	1.9359	.9059	.8430	18.93
22.04	3.2525	.2595	.3549	2.6952	.9011	.5497	3.2445	.2687	.3577	1.9347	.9132	.8499	18.93
23.99	3.3574	.4046	.4671	2.7824	1.0230	.6607	3.3528	.4096	.4687	1.9349	.9073	.8444	18.93
RUN = 563													
-3.72	.5700	-1.1637	-.8229	.2086	.1561	-.5089	.5665	-1.1508	-.8198	2.5984	1.5149	1.3684	19.04
-2.03	.7700	-1.1599	-.7391	.3712	.1441	-.4263	.7676	-1.1517	-.7372	2.5937	1.5094	1.3637	19.04
.03	.9998	-1.1452	-.6484	.5562	.1382	-.3368	.9989	-1.1426	-.6477	2.5943	1.5030	1.3579	19.04
2.05	1.2058	-1.1253	-.5775	.7163	.1445	-.2653	1.2038	-1.1200	-.5762	2.5947	1.5064	1.3609	19.04
4.01	1.4501	-1.1070	-.4896	.9114	.1593	-.1738	1.4416	-1.0871	-.4846	2.6139	1.5239	1.3761	19.04
6.00	1.6816	-1.0665	-.4106	1.0969	.1856	-.0935	1.6699	-1.0415	-.4042	2.6222	1.5306	1.3820	19.04
7.98	1.9618	-1.0039	-.3319	1.3338	.2278	-.0147	1.9490	-.9787	-.3254	2.6229	1.5313	1.3825	19.04
10.05	2.2432	-.9203	-.2700	1.5711	.2878	.0472	2.2296	-.8958	-.2636	2.6217	1.5311	1.3825	19.04
12.00	2.5186	-.8229	-.2066	1.8057	.3620	.1106	2.5039	-.7985	-.2001	2.6214	1.5315	1.3827	19.04
14.05	2.8193	-.7026	-.1316	2.0663	.4532	.1848	2.8055	-.6814	-.1258	2.6227	1.5280	1.3794	19.04
16.02	3.0606	-.5810	-.0481	2.2665	.5509	.2491	3.0443	-.5578	-.0615	2.6212	1.5315	1.3827	19.04
18.06	3.3439	-.4345	.0201	2.5070	.6724	.3384	3.3238	-.4079	.0277	2.6217	1.5370	1.3878	19.04
19.99	3.5697	-.2656	.1037	2.7022	.8045	.4197	3.5551	-.2476	.1090	2.6212	1.5257	1.3775	19.04
22.00	3.7894	-.1044	.1843	2.8775	.9433	.5030	3.7666	-.0782	.1923	2.6232	1.5385	1.3890	19.04
23.98	3.9613	.0786	.2944	3.0185	1.0890	.6114	3.9424	.0988	.3007	2.6203	1.5306	1.3820	19.04

TABLE 5.- CONTINUED.

VEO-WING 1/10-SCALE RESEARCH MODEL,VSTOL TEST NO. 204

ALPHA	CL	CD	CPM	CLE2	CDE2	CME2	CLCT	CDCT	CMCT	NPR	CT	CTRF	THETAJ
RUN = 564													
-3.67	.7859	-1.6243	-.9368	.2880	.1361	-.4987	.7752	-1.5865	-.9274	3.1939	2.0438	1.8294	19.47
-2.03	.9706	-1.6086	-.8724	.4252	.1299	-.4368	.9611	-1.5786	-.8649	3.1839	2.0352	1.8220	19.44
.10	1.2381	-1.5890	-.7711	.6297	.1261	-.3365	1.2283	-1.5613	-.7641	3.1797	2.0328	1.8198	19.43
2.03	1.4238	-1.5647	-.7127	.7556	.1340	-.2764	1.4110	-1.5322	-.7044	3.1824	2.0390	1.8254	19.44
4.01	1.6508	-1.5085	-.6151	.9338	.1476	-.1850	1.6452	-1.4957	-.6117	3.1691	2.0157	1.8047	19.40
6.00	1.9102	-1.4525	-.5277	1.1395	.1726	-.0999	1.9069	-1.4456	-.5259	3.1591	2.0086	1.7986	19.38
7.99	2.2030	-1.3969	-.4620	1.3671	.2150	-.0288	2.1914	-1.3747	-.4561	3.1738	2.0280	1.8157	19.42
10.02	2.4921	-1.3097	-.4074	1.5875	.2749	.0273	2.4677	-1.2842	-.4004	3.1798	2.0327	1.8198	19.43
12.05	2.8196	-1.1870	-.3350	1.8739	.3576	.0974	2.3089	-1.1695	-.3300	3.1764	2.0229	1.8111	19.42
14.03	3.1076	-1.0677	-.2717	2.1078	.4454	.1612	3.0949	-1.0485	-.2662	3.1764	2.0257	1.8136	19.42
16.02	3.3853	-.9333	-.1996	2.3309	.5473	.2349	3.3695	-.9111	-.1931	3.1833	2.0304	1.8177	19.44
18.03	3.6802	-.7810	-.1165	2.5667	.6713	.3212	3.6561	-.7496	-.1070	3.1860	2.0442	1.8300	19.45
19.99	3.9043	-.6063	-.0262	2.7498	.7975	.4084	3.8871	-.5854	-.0197	3.1847	2.0302	1.8175	19.44
22.03	4.1101	-.4347	.0750	2.8986	.9351	.5126	4.0847	-.4060	.0842	3.1881	2.0427	1.8286	19.45
23.98	4.3166	-.2394	.1794	3.0653	1.0826	.6147	4.2960	-.2177	.1865	3.1855	2.0334	1.8203	19.45
RUN = 565													
-3.72	.1444	.0542	-.2427	.1444	.0542	-.2427	.1444	.0542	-.2427	1.0010	0.0000	0.0000	0.00
-2.03	.2686	.0496	-.1700	.2686	.0496	-.1700	.2686	.0496	-.1700	1.0010	0.0000	0.0000	0.00
-.01	.4236	.0527	-.0812	.4236	.0527	-.0812	.4236	.0527	-.0812	1.0012	0.0000	0.0000	0.00
2.06	.6194	.0628	.0376	.6194	.0628	.0376	.6194	.0628	.0376	1.0008	0.0000	0.0000	0.00
4.03	.7678	.0833	.1234	.7678	.0833	.1234	.7678	.0833	.1234	1.0002	0.0000	0.0000	0.00
6.06	.9559	.1158	.2398	.9559	.1158	.2398	.9559	.1158	.2398	1.0000	0.0000	0.0000	0.00
8.04	1.1080	.1578	.3297	1.1080	.1578	.3297	1.1080	.1578	.3297	1.0000	0.0000	0.0000	0.00
10.07	1.2887	.2235	.4309	1.2887	.2235	.4309	1.2887	.2235	.4309	1.0000	0.0000	0.0000	0.00
12.01	1.4456	.2875	.5304	1.4456	.2875	.5304	1.4456	.2875	.5304	1.0000	0.0000	0.0000	0.00
15.99	1.7293	.4524	.7358	1.7293	.4524	.7358	1.7293	.4524	.7358	1.0000	0.0000	0.0000	0.00
18.01	1.7990	.5347	.8058	1.7990	.5347	.8058	1.7990	.5347	.8058	1.0000	0.0000	0.0000	0.00
20.05	1.9447	.6447	.9386	1.9447	.6447	.9386	1.9447	.6447	.9386	1.0000	0.0000	0.0000	0.00
22.03	2.0248	.7446	1.0378	2.0248	.7446	1.0378	2.0248	.7446	1.0378	1.0000	0.0000	0.0000	0.00
24.02	2.1301	.8668	1.1463	2.1301	.8668	1.1463	2.1301	.8668	1.1463	1.0000	0.0000	0.0000	0.00

TABLE 5.- CONTINUED.

VEO-WING 1/10-SCALE RESEARCH MODEL, VSTOL TEST NO. 204

ALPHA	CL	CD	CPM	CLE2	CDE2	CME2	CLCT	CDCT	CMCT	NPR	CT	CTRF	THETAJ
RUN = 567													
-3.66	.5010	-.3793	-.3359	.2919	.0626	-.2424	.4959	-.3685	-.3336	2.0348	.5126	.4890	28.98
-2.00	.6471	-.3716	-.2705	.4249	.0649	-.1768	.6413	-.3603	-.2681	2.0315	.5134	.4898	28.98
.03	.8044	-.3528	-.1913	.5667	.0758	-.0975	.7981	-.3414	-.1888	2.0303	.5136	.4901	28.98
2.02	1.0079	-.3278	-.0815	.7574	.0893	.0116	1.0031	-.3197	-.0797	2.0298	.5099	.4865	28.97
3.98	1.1924	-.2927	.0105	.9183	.1148	.1034	1.1778	-.2856	.0121	2.0285	.5089	.4856	28.97
6.03	1.3836	-.2451	.1137	1.1048	.1531	.2067	1.3785	-.2378	.1154	2.0280	.5093	.4861	28.97
8.03	1.5588	-.1832	.1968	1.2663	.2049	.2898	1.5535	-.1762	.1984	2.0274	.5092	.4859	28.97
10.04	1.7713	-.1032	.3004	1.4660	.2737	.3932	1.7664	-.0971	.3019	2.0258	.5083	.4851	28.97
12.05	1.9612	-.0214	.3907	1.6373	.3505	.4851	1.9504	-.0090	.3939	2.0437	.5172	.4931	29.00
14.05	2.1455	.0796	.4867	1.8097	.4391	.5808	2.1351	.0908	.4896	2.0464	.5161	.4920	29.00
16.06	2.3288	.1945	.5836	1.9804	.5422	.6828	2.3178	.2054	.5916	2.0441	.5163	.4923	29.00
18.00	2.4532	.3061	.6703	2.0923	.6421	.7646	2.4415	.3171	.6734	2.0455	.5168	.4927	29.00
19.98	2.5985	.4347	.7741	2.2265	.7583	.8684	2.5861	.4455	.7772	2.0446	.5172	.4931	29.00
22.01	2.7410	.5725	.8955	2.3554	.8846	.9904	2.7260	.5847	.8992	2.0457	.5203	.4961	29.00
23.97	2.8412	.7150	.9924	2.4454	1.0136	1.0872	2.8260	.7265	.9960	2.0455	.5200	.4958	29.00
RUN = 568													
-3.65	.6677	-.7076	-.4505	.2945	.0665	-.2792	.6600	-.6917	-.4470	2.9169	.9188	.8593	29.39
-2.01	.8221	-.6983	-.3821	.4257	.0678	-.2102	.8126	-.6799	-.3780	2.9221	.9221	.8625	29.37
.03	1.0133	-.6744	-.2925	.5950	.0767	-.1206	1.0083	-.6567	-.2884	2.9226	.9218	.8622	29.37
2.05	1.2282	-.6415	-.1914	.7783	.0948	-.0195	1.2172	-.6236	-.1873	2.9204	.9224	.8628	29.38
4.03	1.4147	-.5986	-.0939	.9397	.1217	.0780	1.4031	-.5810	-.0897	2.9241	.9226	.8628	29.37
6.02	1.6426	-.5449	.0279	1.1426	.1589	.2000	1.6302	-.5274	.0322	2.9227	.9230	.8633	29.37
8.03	1.8217	-.4724	.1136	1.2993	.2109	.2850	1.8106	-.4578	.1173	2.9225	.9196	.8601	29.37
10.03	2.0628	-.3897	.2223	1.5139	.2789	.3947	2.0480	-.3716	.2270	2.9309	.9250	.8651	29.36
11.99	2.2693	-.2934	.3175	1.6974	.3564	.4900	2.2535	-.2754	.3223	2.9304	.9256	.8657	29.36
13.98	2.4339	-.1878	.4011	1.8401	.4415	.5735	2.4178	-.1708	.4058	2.9334	.9251	.8652	29.36
17.96	2.7674	.0630	.6009	2.1328	.6482	.7729	2.7516	.0776	.6052	2.9317	.9230	.8633	29.36
20.00	2.9393	.2078	.7270	2.2820	.7720	.8997	2.9206	.2238	.7320	2.9330	.9263	.8663	29.36
21.98	3.0585	.3481	.8154	2.3800	.8910	.9885	3.0372	.3651	.8208	2.9328	.9291	.8690	29.36
23.96	3.1997	.5145	.9163	2.5011	1.0349	1.0899	3.1761	.5320	.9222	2.9321	.9315	.8712	29.36

TABLE 5.- CONTINUED.

VEO-WING 1/10-SCALE RESEARCH MODEL, VSTOL TEST NO. 204

ALPHA	CL	CD	CPM	CLE2	CDE2	CME2	CLCT	CDCT	CMCT	NPR	CT	CTRF	THETAJ
RUN = 569													
-3.62	.2969	-.1898	-.2943	.2063	.0427	-.2482	.2800	-.1466	-.2857	1.4741	.2457	.2496	24.90
-2.03	.4369	-.1911	-.2218	.3394	.0399	-.1756	.4184	-.1473	-.2130	1.4741	.2468	.2507	24.90
.03	.6182	-.1806	-.1268	.5126	.0466	-.0806	.5982	-.1376	-.1180	1.4761	.2467	.2505	24.90
2.00	.7632	-.1589	-.0505	.6508	.0626	-.0047	.7427	-.1185	-.0422	1.4747	.2447	.2485	24.90
4.01	.9431	-.1302	.0511	.8233	.0866	.0968	.9216	-.0912	.0593	1.4733	.2438	.2478	24.90
6.04	1.1656	-.0913	.1810	1.0381	.1213	.2267	1.1426	-.0530	.1893	1.4729	.2440	.2479	24.91
9.99	1.5304	.0358	.3703	1.3881	.2399	.4162	1.5043	.0733	.3788	1.4769	.2451	.2488	24.89
12.01	1.6897	.1123	.4596	1.5402	.3113	.5054	1.6621	.1490	.4680	1.4771	.2452	.2489	24.90
14.02	1.8665	.2035	.5537	1.7094	.3981	.5998	1.8370	.2401	.5624	1.4776	.2464	.2501	24.89
16.00	2.0351	.3104	.6536	1.8714	.4993	.6997	2.0044	.3458	.6623	1.4755	.2462	.2500	24.90
18.01	2.1579	.4135	.7443	1.9876	.5968	.7904	2.1258	.4481	.7530	1.4770	.2464	.2501	24.90
20.02	2.2872	.5291	.8464	2.1106	.7062	.8925	2.2540	.5624	.8551	1.4757	.2463	.2501	24.90
22.00	2.4013	.6464	.9613	2.2183	.8182	1.0077	2.3666	.6794	.9702	1.4763	.2476	.2513	24.90
23.96	2.4879	.7698	1.0567	2.3003	.9337	1.1027	2.4532	.8001	1.0652	1.4756	.2453	.2491	24.90
RUN = 570													
-3.67	.4437	-.3414	-.3457	.2557	.0604	-.2607	.4184	-.2873	-.3343	1.9258	.4622	.4436	28.74
-2.03	.5973	-.3403	-.2708	.3963	.0589	-.1852	.5689	-.2838	-.2587	1.9321	.4659	.4470	28.76
.04	.7970	-.3237	-.1687	.5829	.0657	-.0835	.7678	-.2706	-.1571	1.9293	.4632	.4444	28.75
2.02	.9700	-.2967	-.0732	.7433	.0838	.0067	.9397	-.2459	-.0669	1.9286	.4616	.4429	28.75
4.03	1.1497	-.2651	.0110	.9091	.1084	.0962	1.1169	-.2142	.0226	1.9309	.4631	.4443	28.76
6.00	1.3284	-.2184	.1099	1.0761	.1452	.1947	1.2949	-.1702	.1211	1.9275	.4612	.4426	28.75
7.98	1.5243	-.1542	.2076	1.2598	.2005	.2924	1.4893	-.1073	.2188	1.9242	.4610	.4424	28.74
9.99	1.7390	-.0804	.3101	1.4627	.2641	.3947	1.7029	-.0354	.3212	1.9237	.4600	.4416	28.74
11.99	1.9182	.0045	.3995	1.6303	.3390	.4841	1.8807	.0481	.4106	1.9242	.4599	.4414	28.74
13.99	2.0998	.1025	.4924	1.8003	.4268	.5770	2.0607	.1448	.5034	1.9227	.4600	.4415	28.73
15.99	2.2676	.2105	.5858	1.9563	.5249	.6706	2.2265	.2521	.5970	1.9228	.4610	.4425	28.73
18.00	2.4283	.3345	.6953	2.1075	.6364	.7797	2.3871	.3732	.7061	1.9224	.4589	.4405	28.74
19.98	2.5671	.4620	.7956	2.2364	.7525	.8799	2.5249	.4991	.8064	1.9223	.4585	.4401	28.73
21.99	2.6900	.5952	.9100	2.3480	.8748	.9946	2.6453	.6317	.9210	1.9223	.4602	.4417	28.73
23.96	2.7884	.7330	.9990	2.4367	1.0010	1.0838	2.7422	.7683	1.0102	1.9212	.4606	.4422	28.73

TABLE 5.- CONTINUED.

VEO-WING 1/10-SCALE RESEARCH MODEL, VSTOL TEST NO. 204

ALPHA	CL	CD	CPM	CLE2	CDE2	CME2	CLCT	CDCT	CMCT	NPR	CT	CTRF	THETAJ
RUN = 571													
-3.66	.6190	-.5990	-.4112	.3009	.0600	-.2660	.6272	-.6162	-.4150	2.6036	.7797	.7318	29.43
-2.01	.7758	-.5874	-.3422	.4395	.0610	-.1973	.7852	-.6056	-.3463	2.6009	.7782	.7304	29.42
.02	.9735	-.5594	-.2404	.6180	.0703	-.0969	.9872	-.5836	-.2460	2.5996	.7704	.7231	29.42
2.01	1.1473	-.5321	-.1595	.7669	.0900	-.0148	1.1585	-.5505	-.1638	2.6044	.7770	.7292	29.43
4.02	1.3369	-.4895	-.0657	.9364	.1170	.0785	1.3502	-.5096	-.0705	2.6016	.7743	.7268	29.42
6.04	1.5310	-.4391	.0377	1.1081	.1545	.1824	1.5438	-.4570	.0334	2.6027	.7765	.7288	29.42
8.00	1.7593	-.3707	.1482	1.3266	.2079	.2928	1.7829	-.3884	.1438	2.6019	.7763	.7286	29.42
10.00	1.9594	-.2903	.2375	1.4958	.2736	.3824	1.9726	-.3064	.2334	2.6043	.7778	.7300	29.43
13.99	2.3453	-.0853	.4264	1.8466	.4417	.5704	2.3627	-.1037	.4214	2.6018	.7730	.7255	29.42
15.99	2.5177	.0343	.5169	2.0011	.5435	.6609	2.5359	.0164	.5119	2.6015	.7728	.7253	29.42
17.97	2.6920	.1619	.6252	2.1555	.6553	.7699	2.7082	.1470	.6209	2.6014	.7767	.7289	29.42
19.98	2.8222	.2966	.7282	2.2710	.7689	.8722	2.8412	.2803	.7232	2.6007	.7734	.7259	29.42
21.97	2.9763	.4489	.8413	2.4088	.9021	.9855	2.9955	.4336	.8364	2.6013	.7738	.7262	29.42
24.00	3.1000	.6044	.9482	2.5140	1.0392	1.0930	3.1170	.5918	.9440	2.6003	.7776	.7297	29.42
RUN = 572													
-3.64	.7373	-.8071	-.4600	.3149	.0571	-.2612	.7251	-.7821	-.4543	3.1629	1.0298	.9619	29.70
-2.03	.8863	-.7896	-.3983	.4430	.0588	-.2017	.8756	-.7691	-.3935	3.1463	1.0247	.9573	29.62
.06	1.0907	-.7606	-.3094	.6179	.0694	-.1133	1.0803	-.7423	-.3051	3.1449	1.0225	.9553	29.61
2.05	1.2878	-.7259	-.2151	.7863	.0876	-.0191	1.2765	-.7076	-.2107	3.1461	1.0230	.9556	29.61
4.04	1.4879	-.6802	-.1059	.9584	.1153	.0903	1.4760	-.6623	-.1015	3.1470	1.0229	.9556	29.61
6.03	1.6856	-.6236	-.0065	1.1283	.1533	.1900	1.6728	-.6058	-.0019	3.1492	1.0235	.9561	29.63
8.01	1.8832	-.5508	.0916	1.3057	.2046	.2876	1.8762	-.5352	.0956	3.1481	1.0212	.9540	29.62
10.01	2.1269	-.4633	.2019	1.5167	.2734	.3984	2.1126	-.4460	.2065	3.1511	1.0241	.9565	29.63
11.98	2.3186	-.3665	.2894	1.6838	.3484	.4858	2.3041	-.3501	.2939	3.1480	1.0235	.9561	29.62
14.01	2.5099	-.2543	.3851	1.8484	.4396	.5820	2.4930	-.2365	.3901	3.1483	1.0263	.9587	29.62
16.00	2.7136	-.1246	.4940	2.0305	.5443	.6902	2.6979	-.1092	.4985	3.1456	1.0236	.9561	29.60
17.97	2.8526	.0007	.5833	2.1458	.6465	.7798	2.8354	.0164	.5881	3.1476	1.0249	.9574	29.61
19.99	2.9992	.1433	.7002	2.2707	.7630	.8966	2.9822	.1577	.7048	3.1483	1.0238	.9564	29.62
22.00	3.1415	.2970	.8124	2.3928	.8901	1.0086	3.1250	.3100	.8167	3.1461	1.0224	.9552	29.62
23.96	3.2683	.4590	.9131	2.4986	1.0270	1.1096	3.2503	.4723	.9177	3.1468	1.0240	.9567	29.62
RUN = 573													
8.01	1.1040	.1536	.3185	1.1040	.1536	.3185	1.1040	.1536	.3185	1.0012	0.0000	0.0000	0.00
8.01	1.1303	.1365	.3082	1.0993	.1766	.3206	1.0993	.1766	.3206	1.0482	.0232	.0507	29.74
8.01	1.1960	.0859	.2841	1.1352	.1709	.3043	1.2084	.0686	.2801	1.1534	.0831	.1046	27.59
8.01	1.2924	.0153	.2660	1.1820	.1827	.3038	1.2976	.0074	.2642	1.3670	.1910	.2005	25.41
8.02	1.4766	-.1154	.2119	1.2425	.2065	.2875	1.4699	-.1063	.2140	1.8235	.4117	.3980	28.00
7.99	1.6665	-.2504	.1856	1.3147	.2128	.2977	1.6579	-.2391	.1883	2.2552	.6150	.5817	29.23
7.99	1.7695	-.3963	.1274	1.3003	.2147	.2809	1.7569	-.3800	.1315	2.7041	.8219	.7704	29.53
7.99	1.8911	-.5512	.0859	1.3009	.2117	.2859	1.8724	-.5270	.0923	3.1719	1.0327	.9646	29.74
8.01	2.2923	-.9728	-.0415	1.3519	.2186	.2888	2.2774	-.9540	-.0363	3.5719	1.6256	1.5178	30.27
8.01	2.7788	-1.5656	-.2157	1.3713	.2188	.2782	2.7591	-1.5407	-.2088	3.5765	2.4340	2.2726	30.26

TABLE 5.- CONTINUED.

VEO-WING 1/10-SCALE RESEARCH MODEL, VSTOL TEST NO. 204

ALPHA	CL	CD	CPM	CLE2	CDE2	CME2	CLCT	CDCT	CMCT	NPR	CT	CTRF	THETAJ
RUN = 575													
-3.83	-.1118	.1211	-.1876	-.1118	.1211	-.1876	-.1118	.1211	-.1876	1.0106	0.0000	0.0000	0.00
-1.99	.0335	.1093	-.1031	.0335	.1093	-.1031	.0335	.1093	-.1031	1.0099	0.0000	0.0000	0.00
-.01	.2006	.1046	-.0054	.2006	.1046	-.0054	.2006	.1046	-.0054	1.0093	0.0000	0.0000	0.00
2.02	.3966	.1039	.1163	.3966	.1039	.1163	.3966	.1039	.1163	1.0104	0.0000	0.0000	0.00
3.99	.5086	.1188	.1857	.5086	.1188	.1857	.5086	.1188	.1857	1.0107	0.0000	0.0000	0.00
6.02	.7058	.1422	.3131	.7058	.1422	.3131	.7058	.1422	.3131	1.0104	0.0000	0.0000	0.00
8.02	.8435	.1786	.3934	.8435	.1786	.3934	.8435	.1786	.3934	1.0104	0.0000	0.0000	0.00
10.00	1.0353	.2305	.5040	1.0353	.2305	.5040	1.0353	.2305	.5040	1.0095	0.0000	0.0000	0.00
14.02	1.3656	.3582	.7068	1.3656	.3582	.7068	1.3656	.3582	.7068	1.0099	0.0000	0.0000	0.00
15.99	1.4722	.4279	.7896	1.4722	.4279	.7896	1.4722	.4279	.7896	1.0098	0.0000	0.0000	0.00
17.98	1.5834	.5100	.8682	1.5834	.5100	.8682	1.5834	.5100	.8682	1.0083	0.0000	0.0000	0.00
19.99	1.7174	.6070	.9739	1.7174	.6070	.9739	1.7174	.6070	.9739	1.0069	0.0000	0.0000	0.00
21.98	1.8390	.7129	1.0872	1.8390	.7129	1.0872	1.8390	.7129	1.0872	1.0053	0.0000	0.0000	0.00
23.97	1.9278	.8218	1.1564	1.9278	.8218	1.1564	1.9278	.8218	1.1564	1.0045	0.0000	0.0000	0.00
RUN = 577													
-3.83	-.2053	-.1274	-.1464	-.1881	.0985	-.0748	-.2022	-.0870	-.1336	1.4414	.2436	.2265	-.51
-2.00	-.0606	-.1442	-.0568	-.0505	.0844	.0146	-.0587	-.1014	-.0434	1.4454	.2461	.2288	-.53
.02	.1117	-.1515	.0336	.1137	.0783	.1050	.1120	-.1076	.0472	1.4468	.2472	.2298	-.53
1.99	.2776	-.1510	.1286	.2717	.0790	.2000	.2764	-.1068	.1423	1.4471	.2475	.2301	-.53
4.00	.4551	-.1364	.2262	.4412	.0921	.2970	.4524	-.0934	.2395	1.4478	.2464	.2290	-.54
6.01	.6509	-.1130	.3436	.6290	.1155	.4145	.6467	-.0696	.3571	1.4484	.2469	.2295	-.54
8.02	.8283	-.0667	.4442	.7985	.1598	.5146	.8227	-.0245	.4573	1.4488	.2458	.2284	-.54
10.03	1.0033	-.0198	.5349	.9655	.2059	.6056	.9962	.0225	.5481	1.4483	.2462	.2288	-.54
12.00	1.1996	.0414	.6374	1.1541	.2663	.7079	1.1910	.0841	.6508	1.4496	.2469	.2294	-.54
13.98	1.3439	.1081	.7218	1.2907	.3308	.7922	1.3339	.1501	.7350	1.4496	.2464	.2290	-.54
15.99	1.5029	.1853	.8153	1.4417	.4065	.8859	1.4913	.2273	.8287	1.4491	.2469	.2295	-.54
18.00	1.6625	.2822	.9063	1.5936	.5009	.9771	1.6494	.3236	.9197	1.4485	.2467	.2293	-.54
20.01	1.8119	.3856	1.0076	1.7350	.6031	1.0785	1.7969	.4279	1.0214	1.4496	.2482	.2307	-.54
22.01	1.9398	.4997	1.1045	1.8555	.7141	1.1753	1.9235	.5411	1.1182	1.4495	.2479	.2304	-.54
24.02	2.0602	.6182	1.1956	1.9685	.8292	1.2662	2.0425	.6587	1.2092	1.4498	.2476	.2301	-.54

TABLE 5.- CONTINUED.

VEO-WING 1/10-SCALE RESEARCH MODEL,VSTOL TEST NO. 204

ALPHA	CL	CD	CPM	CLE2	CDE2	CME2	CLCT	CDCT	CMCT	NPR	CT	CTRF	THETAJ
RUN = 578													
-3.83	-.2748	-.2633	-.0951	-.2325	.1345	-.1352	-.2708	-.2252	-.0990	1.8845	.4424	.4000	-2.25
-1.99	-.1181	-.2824	-.0102	-.0885	.1169	-.0504	-.1152	-.2438	-.0141	1.8836	.4429	.4004	-2.24
-.01	.0523	-.2929	.0784	.0682	.1085	.0381	.0539	-.2529	.0744	1.8848	.4443	.4017	-2.25
2.02	.2147	-.2912	.1592	.2163	.1105	.1189	.2148	-.2511	.1551	1.8839	.4444	.4018	-2.24
4.01	.4200	-.2814	.2691	.4077	.1208	.2289	.4188	-.2406	.2650	1.8859	.4451	.4024	-2.25
6.00	.6037	-.2594	.3721	.5774	.1418	.3318	.6010	-.2191	.3680	1.8856	.4447	.4021	-2.25
8.02	.7955	-.2202	.4800	.7551	.1787	.4398	.7915	-.1811	.4761	1.8845	.4434	.4009	-2.25
10.01	.9817	-.1705	.5693	.9277	.2258	.5293	.9765	-.1325	.5655	1.8861	.4424	.3999	-2.25
12.00	1.1642	-.1124	.6605	1.0965	.2815	.6205	1.1577	-.0749	.6567	1.8860	.4422	.3997	-2.25
13.99	1.3521	-.0406	.7656	1.2699	.3550	.7251	1.3435	.0010	.7613	1.8867	.4470	.4041	-2.25
16.04	1.5248	.0393	.8643	1.4285	.4313	.8239	1.5148	.0801	.8601	1.8847	.4465	.4037	-2.25
17.99	1.6529	.1234	.9316	1.5432	.5128	.8911	1.6413	.1648	.9273	1.8856	.4475	.4046	-2.25
19.99	1.8257	.2337	1.0379	1.7034	.6160	.9977	1.8136	.2716	1.0339	1.8853	.4440	.4014	-2.25
22.00	1.9694	.3457	1.1398	1.8333	.7248	1.0995	1.9555	.3844	1.1357	1.8853	.4455	.4028	-2.25
24.02	2.1009	.4714	1.2310	1.9512	.8461	1.1906	2.0853	.5103	1.2268	1.8852	.4464	.4036	-2.25
RUN = 579													
-3.84	-.3296	-.4998	-.0783	-.2642	.1435	-.1334	-.3263	-.4676	-.0811	2.5587	.7369	.6466	-1.96
-1.99	-.1518	-.5204	.0156	-.1072	.1267	-.0397	-.1495	-.4861	.0127	2.5600	.7391	.6486	-1.96
.03	.0478	-.5296	.1120	.0696	.1177	.0568	.0489	-.4962	.1092	2.5586	.7381	.6477	-1.96
2.01	.2218	-.5289	.1957	.2212	.1195	.1405	.2218	-.4947	.1928	2.5597	.7389	.6483	-1.96
4.00	.4128	-.5211	.2879	.3895	.1298	.2324	.4114	-.4840	.2847	2.5603	.7422	.6513	-1.96
6.02	.6158	-.4973	.3983	.5697	.1525	.3428	.6131	-.4602	.3951	2.5603	.7424	.6514	-1.96
8.01	.8035	-.4569	.4906	.7351	.1886	.4353	.7998	-.4222	.4876	2.5601	.7398	.6492	-1.96
10.00	1.0165	-.4072	.5949	.9259	.2341	.5397	1.0118	-.3741	.5920	2.5594	.7381	.6477	-1.96
12.03	1.2247	-.3429	.6900	1.1114	.2950	.6348	1.2188	-.3098	.6872	2.5595	.7383	.6478	-1.96
14.00	1.4107	-.2698	.7845	1.2760	.3615	.7295	1.4041	-.2392	.7818	2.5602	.7357	.6456	-1.96
16.00	1.5742	-.1900	.8721	1.4176	.4360	.8171	1.5666	-.1599	.8695	2.5586	.7353	.6453	-1.96
18.01	1.7357	-.0995	.9570	1.5568	.5225	.9019	1.7266	-.0678	.9542	2.5591	.7375	.6472	-1.96
19.99	1.9046	.0069	1.0534	1.7040	.6232	.9981	1.8941	.0391	1.0505	2.5585	.7385	.6481	-1.96
22.01	2.0705	.1288	1.1624	1.8482	.7378	1.1071	2.0588	.1608	1.1595	2.5581	.7388	.6483	-1.96
24.01	2.1984	.2495	1.2470	1.9545	.8518	1.1916	2.1851	.2825	1.2439	2.5578	.7405	.6498	-1.96

TABLE 5.- CONTINUED.

VED-WING 1/10-SCALE RESEARCH MODEL,VSTOL TEST NO. 204

ALPHA	CL	CD	CPM	CLE2	CDE2	CME2	CLCT	CDCT	CMCT	NPR	CT	CTRF	THETAJ
RUN = 580													
-3.85	-.3705	-.7058	-.0661	-.2789	.1414	-.1389	-.3723	-.7222	-.0646	3.1117	.9809	.8522	-2.32
-2.00	-.1923	-.7228	.0248	-.1283	.1244	-.0477	-.1938	-.7419	.0265	3.1105	.9780	.8496	-2.32
-.01	.0144	-.7371	.1229	.0491	.1147	.0500	.0138	-.7532	.1243	3.1113	.9814	.8526	-2.32
2.00	.2107	-.7396	.2141	.2154	.1150	.1411	.2106	-.7537	.2153	3.1112	.9838	.8546	-2.32
4.00	.4176	-.7299	.3113	.3925	.1263	.2381	.4180	-.7420	.3124	3.1112	.9860	.8566	-2.32
6.01	.6208	-.7035	.4157	.5657	.1498	.3426	.6217	-.7171	.4168	3.1101	.9843	.8551	-2.32
8.00	.8261	-.6664	.5168	.7416	.1832	.4438	.8276	-.6813	.5180	3.1104	.9828	.8538	-2.32
9.99	1.0297	-.6127	.6092	.9162	.2306	.5365	1.0321	-.6304	.6107	3.1117	.9795	.8509	-2.32
12.01	1.2396	-.5487	.7030	1.0964	.2900	.6303	1.2426	-.5663	.7045	3.1110	.9794	.8508	-2.32
14.00	1.4372	-.4762	.8026	1.2648	.3577	.7299	1.4407	-.4930	.8041	3.1101	.9802	.8515	-2.32
16.02	1.6159	-.3932	.8963	1.4141	.4345	.8235	1.6198	-.4095	.8978	3.1107	.9807	.8520	-2.32
18.01	1.7776	-.3039	.9792	1.5470	.5170	.9054	1.7819	-.3194	.9796	3.1101	.9815	.8526	-2.32
20.00	1.9528	-.1962	1.0768	1.6936	.6166	1.0040	1.9576	-.2110	1.0781	3.1088	.9821	.8532	-2.32
22.02	2.1250	-.0750	1.1876	1.8369	.7296	1.1146	2.1298	-.0882	1.1888	3.1109	.9838	.8547	-2.32
24.01	2.2722	.0540	1.2748	1.9562	.8485	1.2017	2.2772	.0413	1.2759	3.1096	.9843	.8551	-2.32
RUN = 581													
8.01	.8790	.1818	.3984	.8790	.1818	.3984	.8790	.1818	.3984	1.0119	0.0000	0.0000	0.00
7.99	.8014	.1444	.4030	.7969	.1906	.4119	.7969	.1906	.4119	1.0368	.0484	.0465	-2.49
7.99	.7985	.0902	.4302	.7878	.1827	.4568	.7988	.0881	.4296	1.1361	.0978	.0930	-1.37
7.99	.8100	-.0171	.4418	.7846	.1702	.4967	.8093	-.0153	.4423	1.3516	.2019	.1890	-.26
7.99	.8098	-.1624	.4580	.7711	.1883	.4189	.8111	-.1740	.4593	1.7529	.3873	.3528	-1.70
7.98	.7915	-.3291	.4936	.7379	.1864	.4481	.7931	-.3445	.5001	2.1998	.5826	.5183	-2.05
7.98	.8195	-.5028	.5078	.7455	.1899	.4495	.8193	-.5055	.5030	2.6930	.7968	.6966	-1.89
8.00	.8229	-.6598	.5205	.7386	.1868	.4478	.8247	-.6776	.5220	3.1085	.9793	.8508	-2.32
8.00	.8569	-1.1618	.5935	.7391	.2021	.4639	.8589	-1.1050	.5957	3.5149	1.5732	1.3690	-3.06
7.99	.8843	-1.8091	.6511	.7079	.2223	.4588	.8810	-1.7712	.6475	3.4975	2.3437	2.0390	-3.03
RUN = 583													
-3.73	-.1319	.0339	-.1900	-.1319	.0339	-.1900	-.1319	.0339	-.1900	1.0064	0.0000	0.0000	0.00
-2.00	-.0482	.0247	-.0979	-.0482	.0247	-.0979	-.0482	.0247	-.0979	1.0063	0.0000	0.0000	0.00
-.02	.0492	.0188	.0147	.0492	.0188	.0147	.0492	.0188	.0147	1.0066	0.0000	0.0000	0.00
1.99	.1457	.0193	.1143	.1457	.0193	.1143	.1457	.0193	.1143	1.0064	0.0000	0.0000	0.00
3.99	.2504	.0233	.2206	.2504	.0233	.2206	.2504	.0233	.2206	1.0057	0.0000	0.0000	0.00
5.98	.3646	.0370	.3438	.3646	.0370	.3438	.3646	.0370	.3438	1.0056	0.0000	0.0000	0.00
7.98	.4512	.0576	.4357	.4512	.0576	.4357	.4512	.0576	.4357	1.0051	0.0000	0.0000	0.00
10.01	.5337	.0830	.5325	.5337	.0830	.5325	.5337	.0830	.5325	1.0051	0.0000	0.0000	0.00
11.98	.6395	.1253	.6468	.6395	.1253	.6468	.6395	.1253	.6468	1.0050	0.0000	0.0000	0.00
14.02	.7282	.1630	.7409	.7282	.1630	.7409	.7282	.1630	.7409	1.0046	0.0000	0.0000	0.00
16.04	.7909	.2047	.8080	.7909	.2047	.8080	.7909	.2047	.8080	1.0050	0.0000	0.0000	0.00
17.98	.8799	.2559	.9050	.8799	.2559	.9050	.8799	.2559	.9050	1.0044	0.0000	0.0000	0.00
19.95	.9699	.3142	1.0032	.9699	.3142	1.0032	.9699	.3142	1.0032	1.0042	0.0000	0.0000	0.00
22.00	1.0423	.3767	1.0881	1.0423	.3767	1.0881	1.0423	.3767	1.0881	1.0033	0.0000	0.0000	0.00
24.02	1.1267	.4497	1.1653	1.1267	.4497	1.1653	1.1267	.4497	1.1653	1.0031	0.0000	0.0000	0.00

TABLE 5.- CONTINUED.

VEO-WING 1/10-SCALE RESEARCH MODEL, VSTOL TEST NO. 204

ALPHA	CL	CD	CPM	CLE2	CDE2	CME2	CLCT	CDCT	CMCT	NPR	CT	CTRF	THETAJ
RUN = 584													
-3.58	.1841	.0513	.0860	.1841	.0513	.0860	.1841	.0513	.0860	1.0052	0.0000	0.0000	0.00
-2.02	.2555	.0591	.1643	.2555	.0591	.1643	.2555	.0591	.1643	1.0054	0.0000	0.0000	0.00
-.02	.3535	.0716	.2790	.3535	.0716	.2790	.3535	.0716	.2790	1.0055	0.0000	0.0000	0.00
2.01	.4378	.0912	.3733	.4378	.0912	.3733	.4378	.0912	.3733	1.0056	0.0000	0.0000	0.00
4.04	.5248	.1172	.4767	.5248	.1172	.4767	.5248	.1172	.4767	1.0053	0.0000	0.0000	0.00
6.06	.5857	.1407	.5584	.5857	.1407	.5584	.5857	.1407	.5584	1.0052	0.0000	0.0000	0.00
7.99	.6216	.1614	.6104	.6216	.1614	.6104	.6216	.1614	.6104	1.0050	0.0000	0.0000	0.00
10.01	.6061	.1657	.6236	.6061	.1657	.6236	.6061	.1657	.6236	1.0054	0.0000	0.0000	0.00
11.98	.6761	.1994	.7135	.6761	.1994	.7135	.6761	.1994	.7135	1.0041	0.0000	0.0000	0.00
13.99	.7503	.2376	.7931	.7503	.2376	.7931	.7503	.2376	.7931	1.0035	0.0000	0.0000	0.00
16.02	.8385	.2886	.8819	.8385	.2886	.8819	.8385	.2886	.8819	1.0031	0.0000	0.0000	0.00
17.95	.9089	.3436	.9550	.9089	.3436	.9550	.9089	.3436	.9550	1.0030	0.0000	0.0000	0.00
20.00	.9824	.4092	1.0333	.9824	.4092	1.0333	.9824	.4092	1.0333	1.0017	0.0000	0.0000	0.00
21.95	1.0387	.4655	1.1013	1.0387	.4655	1.1013	1.0387	.4655	1.1013	1.0010	0.0000	0.0000	0.00
24.02	1.1012	.5341	1.1678	1.1012	.5341	1.1678	1.1012	.5341	1.1678	1.0000	0.0000	0.0000	0.00
RUN = 585													
-3.91	-.4001	.1388	-.4138	-.4001	.1388	-.4138	-.4001	.1388	-.4138	1.0049	0.0000	0.0000	0.00
-1.96	-.3242	.1127	-.3236	-.3242	.1127	-.3236	-.3242	.1127	-.3236	1.0048	0.0000	0.0000	0.00
-.04	-.2345	.0891	-.2166	-.2345	.0891	-.2166	-.2345	.0891	-.2166	1.0052	0.0000	0.0000	0.00
2.00	-.1362	.0694	-.1077	-.1362	.0694	-.1077	-.1362	.0694	-.1077	1.0053	0.0000	0.0000	0.00
4.00	-.0473	.0603	-.0185	-.0473	.0603	-.0185	-.0473	.0603	-.0185	1.0042	0.0000	0.0000	0.00
6.04	.0302	.0565	.0664	.0302	.0565	.0664	.0302	.0565	.0664	1.0037	0.0000	0.0000	0.00
7.94	.1310	.0568	.1675	.1310	.0568	.1675	.1310	.0568	.1675	1.0032	0.0000	0.0000	0.00
10.04	.2472	.0632	.2816	.2472	.0632	.2816	.2472	.0632	.2816	1.0029	0.0000	0.0000	0.00
12.02	.3581	.0780	.3899	.3581	.0780	.3899	.3581	.0780	.3899	1.0021	0.0000	0.0000	0.00
14.03	.4318	.0986	.4623	.4318	.0986	.4623	.4318	.0986	.4623	1.0013	0.0000	0.0000	0.00
16.02	.5345	.1223	.5641	.5345	.1223	.5641	.5345	.1223	.5641	1.0005	0.0000	0.0000	0.00
17.99	.6422	.1607	.6600	.6422	.1607	.6600	.6422	.1607	.6600	1.0000	0.0000	0.0000	0.00
20.01	.7413	.1979	.7649	.7413	.1979	.7649	.7413	.1979	.7649	1.0000	0.0000	0.0000	0.00
22.03	.8256	.2468	.8501	.8256	.2468	.8501	.8256	.2468	.8501	1.0000	0.0000	0.0000	0.00
23.99	.9082	.2994	.9335	.9082	.2994	.9335	.9082	.2994	.9335	1.0000	0.0000	0.0000	0.00

TABLE 5.- CONTINUED.

VEO-WING 1/10-SCALE RESEARCH MODEL, VSTOL TEST NO. 204

ALPHA	CL	CD	CPM	CLE2	CDE2	CME2	CLCT	CDCT	CMCT	NPR	CT	CTRF	THETAJ
RUN = 586													
-3.66	-.0423	.0242	-.1149	-.0423	.0242	-.1149	-.0423	.0242	-.1149	1.0063	0.0000	0.0000	0.00
-2.01	-.0027	.0183	-.0534	-.0027	.0183	-.0534	-.0027	.0183	-.0534	1.0065	0.0000	0.0000	0.00
-.02	.0462	.0168	.0099	.0462	.0168	.0099	.0462	.0168	.0099	1.0057	0.0000	0.0000	0.00
1.97	.0881	.0192	.0675	.0881	.0192	.0675	.0881	.0192	.0675	1.0051	0.0000	0.0000	0.00
4.04	.1342	.0229	.1237	.1342	.0229	.1237	.1342	.0229	.1237	1.0046	0.0000	0.0000	0.00
6.03	.1896	.0317	.1933	.1896	.0317	.1933	.1896	.0317	.1933	1.0031	0.0000	0.0000	0.00
8.02	.2374	.0414	.2525	.2374	.0414	.2525	.2374	.0414	.2525	1.0027	0.0000	0.0000	0.00
10.01	.2939	.0569	.3151	.2939	.0569	.3151	.2939	.0569	.3151	1.0017	0.0000	0.0000	0.00
11.95	.3477	.0784	.3736	.3477	.0784	.3736	.3477	.0784	.3736	1.0011	0.0000	0.0000	0.00
13.98	.4090	.1028	.4311	.4090	.1028	.4311	.4090	.1028	.4311	1.0002	0.0000	0.0000	0.00
16.02	.4728	.1296	.4970	.4728	.1296	.4970	.4728	.1296	.4970	1.0000	0.0000	0.0000	0.00
18.04	.5395	.1634	.5597	.5395	.1634	.5597	.5395	.1634	.5597	1.0000	0.0000	0.0000	0.00
20.01	.6058	.2033	.6255	.6058	.2033	.6255	.6058	.2033	.6255	1.0000	0.0000	0.0000	0.00
21.98	.6661	.2435	.6853	.6661	.2435	.6853	.6661	.2435	.6853	1.0000	0.0000	0.0000	0.00
23.96	.7316	.2935	.7440	.7316	.2935	.7440	.7316	.2935	.7440	1.0000	0.0000	0.0000	0.00
RUN = 589													
-3.73	.0989	-.4681	-.2373	-.0033	.0227	-.1200	.1007	-.4765	-.2393	1.4481	.4916	.5013	15.49
-2.00	.1700	-.4676	-.1632	.0532	.0183	-.0461	.1724	-.4775	-.1656	1.4455	.4901	.4998	15.52
-.01	.2258	-.4617	-.1099	.0925	.0185	.0068	.2289	-.4728	-.1126	1.4441	.4887	.4984	15.53
1.99	.2874	-.4537	-.0533	.1372	.0225	.0636	.2906	-.4638	-.0558	1.4457	.4896	.4993	15.52
4.02	.3585	-.4432	.0108	.1910	.0299	.1283	.3612	-.4507	.0089	1.4496	.4921	.5018	15.49
5.98	.4155	-.4273	.0612	.2318	.0401	.1787	.4183	-.4345	.0594	1.4499	.4925	.5022	15.48
8.07	.4934	-.4081	.1292	.2923	.0533	.2470	.4960	-.4141	.1276	1.4499	.4935	.5033	15.48
10.02	.5630	-.3836	.1938	.3461	.0713	.3117	.5655	-.3890	.1924	1.4504	.4942	.5039	15.47
12.00	.6420	-.3523	.2639	.4099	.0940	.3817	.6451	-.3583	.2623	1.4498	.4934	.5031	15.48
13.98	.7103	-.3075	.3202	.4630	.1305	.4379	.7137	-.3135	.3186	1.4495	.4933	.5030	15.48
16.07	.7967	-.2663	.3901	.5336	.1624	.5078	.8003	-.2722	.3885	1.4498	.4933	.5030	15.48
18.01	.8637	-.2247	.4462	.5852	.1963	.5643	.8665	-.2289	.4449	1.4506	.4950	.5047	15.47
19.99	.9310	-.1772	.5074	.6391	.2327	.6251	.9349	-.1826	.5058	1.4502	.4935	.5032	15.47
21.99	1.0141	-.1247	.5766	.7069	.2761	.6948	1.0170	-.1286	.5755	1.4510	.4952	.5050	15.47
23.97	1.0952	-.0610	.6383	.7751	.3280	.7562	1.0991	-.0657	.6369	1.4493	.4941	.5039	15.48

TABLE 5.- CONTINUED.

VEO-WING 1/10-SCALE RESEARCH MODEL,VSTOL TEST NO. 204

ALPHA	CL	CD	CPM	CLE2	CDE2	CME2	CLCT	CDCT	CMCT	NPR	CT	CTRF	THETAJ
RUN = 590													
-3.69	.2848	-.8100	-.3438	.0284	.0636	-.1095	.2863	-.8149	-.3451	1.8928	.8949	.9105	20.05
-2.02	.3543	-.8040	-.2850	.0737	.0604	-.0513	.3564	-.8105	-.2867	1.8880	.8933	.9088	20.01
-.01	.4323	-.7923	-.2194	.1220	.0611	.0140	.4349	-.7995	-.2213	1.8863	.8925	.9080	19.99
2.01	.5158	-.7752	-.1571	.1761	.0655	.0760	.5191	-.7834	-.1593	1.8858	.8913	.9068	19.99
4.03	.5877	-.7527	-.1049	.2189	.0748	.1280	.5917	-.7616	-.1074	1.8869	.8904	.9059	20.00
5.99	.6622	-.7274	-.0445	.2660	.0851	.1879	.6673	-.7379	-.0475	1.8880	.8885	.9040	20.01
8.04	.7493	-.6951	.0180	.3264	.1001	.2494	.7563	-.7083	.0141	1.8844	.8853	.9008	19.97
9.97	.8465	-.6626	.0892	.3949	.1217	.3217	.8518	-.6718	.0865	1.8838	.8895	.9050	19.97
11.94	.9268	-.6209	.1469	.4508	.1440	.3782	.9346	-.6334	.1431	1.8818	.8855	.9009	19.95
13.94	1.0148	-.5708	.2103	.5131	.1759	.4413	1.0238	-.5841	.2061	1.8827	.8842	.8996	19.96
15.96	1.1105	-.5215	.2789	.5816	.2091	.5105	1.1185	-.5326	.2754	1.8817	.8865	.9020	19.95
18.00	1.1995	-.4614	.3375	.6451	.2498	.5690	1.2080	-.4724	.3339	1.8810	.8863	.9017	19.94
19.98	1.2884	-.4002	.4070	.7092	.2919	.6388	1.2969	-.4103	.4036	1.8815	.8871	.9025	19.94
22.01	1.3825	-.3290	.4688	.7780	.3426	.7010	1.3905	-.3380	.4657	1.8843	.8881	.9036	19.97
24.04	1.4791	-.2466	.5352	.8525	.4022	.7668	1.4886	-.2565	.5316	1.8828	.8865	.9020	19.96
RUN = 591													
-3.68	.4495	-1.3836	-.5063	.0233	.0548	-.1196	.4567	-1.4080	-.5129	2.5535	1.4750	1.5002	20.19
-2.02	.5309	-1.3722	-.4526	.0637	.0519	-.0663	.5392	-1.3977	-.4595	2.5544	1.4736	1.4988	20.18
.02	.6325	-1.3557	-.3884	.1143	.0530	-.0016	.6410	-1.3788	-.3947	2.5562	1.4758	1.5010	20.17
1.99	.7262	-1.3332	-.3254	.1605	.0557	.0610	.7359	-1.3572	-.3321	2.5582	1.4745	1.4997	20.17
4.00	.8336	-1.3073	-.2585	.2189	.0630	.1285	.8434	-1.3290	-.2647	2.5578	1.4766	1.5018	20.17
6.00	.9304	-1.2777	-.2001	.2667	.0740	.1878	.9391	-1.2954	-.2052	2.5624	1.4806	1.5059	20.15
8.05	1.0343	-1.2367	-.1368	.3239	.0883	.2505	1.0448	-1.2563	-.1425	2.5614	1.4782	1.5034	20.15
10.01	1.1421	-1.1950	-.0699	.3856	.1066	.3180	1.1522	-1.2124	-.0751	2.5609	1.4802	1.5055	20.16
12.04	1.2358	-1.1434	-.0203	.4327	.1323	.3682	1.2455	-1.1588	-.0249	2.5607	1.4822	1.5075	20.16
14.05	1.3602	-1.0855	.0589	.5125	.1616	.4474	1.3702	-1.1002	.0543	2.5614	1.4825	1.5079	20.15
15.97	1.4652	-1.0246	.1230	.5766	.1924	.5113	1.4762	-1.0398	.1182	2.5589	1.4815	1.5069	20.16
17.98	1.5658	-.9559	.1784	.6342	.2306	.5670	1.5763	-.9693	.1740	2.5612	1.4832	1.5086	20.15
19.99	1.6764	-.8797	.2487	.7027	.2747	.6377	1.6863	-.8915	.2447	2.5619	1.4848	1.5102	20.15
21.96	1.7876	-.7958	.3197	.7756	.3233	.7085	1.7989	-.8083	.3154	2.5600	1.4835	1.5088	20.16
24.05	1.8997	-.6996	.3863	.8482	.3814	.7748	1.9120	-.7122	.3817	2.5595	1.4827	1.5080	20.16

TABLE 5.- CONTINUED.

VEO-WING 1/10-SCALE RESEARCH MODEL,VSTOL TEST NO. 204

ALPHA	CL	CD	CPM	CLE2	CDE2	CME2	CLCT	CDCT	CMCT	NPR	CT	CTRF	THETAJ
RUN = 592													
-3.66	.6251	-1.8876	-.6551	.0211	.0445	-.1063	.6285	-1.8984	-.6582	3.1345	1.9889	2.0243	21.02
-2.02	.6895	-1.8477	-.6138	.0427	.0405	-.0748	.6694	-1.7888	-.5970	3.1042	1.9611	1.9959	20.93
.06	.8231	-1.8184	-.5263	.1110	.0395	.0105	.8031	-1.7661	-.5112	3.0961	1.9550	1.9897	20.91
2.00	.9260	-1.7848	-.4679	.1546	.0418	.0667	.9069	-1.7396	-.4546	3.0909	1.9482	1.9828	20.89
4.05	1.0401	-1.7668	-.4297	.1923	.0503	.1126	1.0529	-1.7943	-.4380	3.1165	1.9701	2.0051	20.97
6.07	1.1648	-1.7354	-.3620	.2490	.0585	.1830	1.1745	-1.7545	-.3678	3.1194	1.9789	2.0141	20.97
8.00	1.2715	-1.6810	-.2999	.3008	.0720	.2422	1.2375	-1.6198	-.2810	3.1178	1.9688	2.0038	20.97
9.98	1.3905	-1.6324	-.2312	.3583	.0894	.3118	1.4049	-1.6565	-.2388	3.1167	1.9724	2.0074	20.97
12.03	1.5075	-1.5672	-.1626	.4182	.1115	.3784	1.4708	-1.5107	-.1443	3.1117	1.9662	2.0011	20.95
14.06	1.6402	-1.5052	-.0920	.4877	.1393	.4510	1.6559	-1.5276	-.0994	3.1143	1.9731	2.0081	20.96
15.97	1.7482	-1.4374	-.0285	.5421	.1663	.5144	1.7655	-1.4605	-.0363	3.1177	1.9716	2.0066	20.97
17.98	1.8720	-1.3527	.0266	.6089	.2103	.5702	1.8884	-1.3729	.0195	3.1175	1.9745	2.0095	20.97
19.98	1.9989	-1.2656	.1032	.6820	.2526	.6465	2.0157	-1.2850	.0962	3.1124	1.9747	2.0098	20.95
22.04	2.1137	-1.1713	.1641	.7469	.3007	.7078	2.1347	-1.1834	.1578	3.1081	1.9771	2.0122	20.94
23.97	2.2141	-1.0665	.2169	.8012	.3502	.7578	2.1667	-1.0191	.2350	3.1110	1.9659	2.0003	20.95
RUN = 593													
7.99	.2374	.0677	.2510	.2374	.0677	.2510	.2374	.0677	.2510	1.0015	0.0000	0.0000	0.00
7.99	.2744	-.0120	.2281	.2294	.0823	.2519	.2744	-.0120	.2281	1.0402	.1001	.1045	17.52
8.00	.3597	-.1328	.1933	.2697	.0502	.2418	.3597	-.1349	.1927	1.1393	.1977	.2035	17.94
8.01	.4573	-.3227	.1430	.2901	.0454	.2393	.4590	-.3265	.1420	1.3453	.3959	.4043	16.41
8.03	.6450	-.6341	.0608	.2687	.0823	.2603	.6512	-.6467	.0574	1.7721	.7862	.8002	18.41
8.03	.9258	-.9676	-.0529	.3337	.0945	.2658	.9280	-.9714	-.0540	2.2338	1.1957	1.2160	21.11
8.01	1.0576	-1.3330	-.1562	.3113	.0869	.2542	1.0685	-1.3538	-.1622	2.6782	1.5769	1.6041	19.71
8.02	1.2633	-1.6637	-.2977	.2963	.0837	.2419	1.2326	-1.6083	-.2806	3.1073	1.9623	1.9971	20.94
7.99	1.8204	-2.7523	-.6208	.2717	.0909	.2577	1.8308	-2.7715	-.6267	3.5512	3.1786	3.2376	20.58
7.96	2.5901	-4.1327	-1.0549	.2741	.1025	.2594	2.5708	-4.0976	-1.0440	3.5234	4.7394	4.8272	20.71
RUN = 595													
-3.76	-.2155	.0561	-.2079	-.2155	.0561	-.2079	-.2155	.0561	-.2079	1.0058	0.0000	0.0000	0.00
-2.06	-.0258	.0330	-.0981	-.0258	.0330	-.0981	-.0258	.0330	-.0981	1.0062	0.0000	0.0000	0.00
.06	.1253	.0254	-.0211	.1253	.0254	-.0211	.1253	.0254	-.0211	1.0063	0.0000	0.0000	0.00
1.97	.2959	.0231	.0838	.2959	.0231	.0838	.2959	.0231	.0838	1.0067	0.0000	0.0000	0.00
4.00	.4658	.0389	.1810	.4658	.0389	.1810	.4658	.0389	.1810	1.0067	0.0000	0.0000	0.00
6.04	.6211	.0573	.2786	.6211	.0573	.2786	.6211	.0573	.2786	1.0068	0.0000	0.0000	0.00
8.04	.7931	.0891	.3852	.7931	.0891	.3852	.7931	.0891	.3852	1.0067	0.0000	0.0000	0.00
10.08	.9788	.1336	.4876	.9788	.1336	.4876	.9788	.1336	.4876	1.0068	0.0000	0.0000	0.00
11.99	1.1455	.1890	.5795	1.1455	.1890	.5795	1.1455	.1890	.5795	1.0072	0.0000	0.0000	0.00
14.03	1.3232	.2600	.6821	1.3232	.2600	.6821	1.3232	.2600	.6821	1.0070	0.0000	0.0000	0.00
15.96	1.4554	.3403	.7632	1.4554	.3403	.7632	1.4554	.3403	.7632	1.0062	0.0000	0.0000	0.00
18.02	1.6023	.4369	.8664	1.6023	.4369	.8664	1.6023	.4369	.8664	1.0056	0.0000	0.0000	0.00
19.96	1.7106	.5310	.9567	1.7106	.5310	.9567	1.7106	.5310	.9567	1.0045	0.0000	0.0000	0.00
21.95	1.8235	.6290	1.0636	1.8235	.6290	1.0636	1.8235	.6290	1.0636	1.0037	0.0000	0.0000	0.00
24.04	1.9211	.7431	1.1540	1.9211	.7431	1.1540	1.9211	.7431	1.1540	1.0017	0.0000	0.0000	0.00

TABLE 5.- CONTINUED.

VEO-WING 1/10-SCALE RESEARCH MODEL, VSTOL TEST NO. 204

ALPHA	CL	CD	CPM	CLE2	CDE2	CME2	CLCT	CDCT	CMCT	NPR	CT	CTRF	THETAJ
RUN = 597													
-3.73	.0077	-.4476	-.3498	-.0899	.0537	-.2114	.0052	-.4352	-.3464	1.4422	.5127	.5107	14.75
-2.00	.2406	-.4585	-.2349	.1290	.0335	-.0980	.2392	-.4522	-.2331	1.4393	.5065	.5045	14.78
.08	.3682	-.4533	-.1750	.2387	.0347	-.0381	.3664	-.4467	-.1732	1.4395	.5069	.5049	14.77
1.97	.5673	-.4470	-.0703	.4218	.0366	.0666	.5653	-.4404	-.0685	1.4393	.5070	.5050	14.78
4.02	.7468	-.4251	.0218	.5841	.0525	.1586	.7447	-.4190	.0235	1.4386	.5065	.5045	14.78
6.01	.9402	-.3909	.1256	.7611	.0805	.2625	.9380	-.3851	.1273	1.4372	.5063	.5043	14.80
7.99	1.1291	-.3501	.2230	.9340	.1144	.3598	1.1269	-.3448	.2246	1.4374	.5058	.5038	14.79
10.02	1.3120	-.2926	.3122	1.1009	.1640	.4487	1.3099	-.2880	.3136	1.4383	.5050	.5030	14.79
11.97	1.5218	-.2190	.4201	1.2950	.2306	.5568	1.5193	-.2140	.4216	1.4370	.5056	.5036	14.80
16.03	1.8864	-.0222	.6116	1.6281	.4105	.7484	1.8834	-.0171	.6132	1.4367	.5059	.5039	14.30
18.02	2.0515	.0860	.7088	1.7780	.5108	.8458	2.0476	.0921	.7108	1.4409	.5072	.5052	14.76
19.98	2.2018	.2010	.8046	1.9126	.6184	.9422	2.1963	.2090	.8073	1.4422	.5098	.5070	14.75
22.08	2.3461	.3283	.9143	2.0414	.7352	1.0520	2.3399	.3365	.9171	1.4422	.5103	.5083	14.75
23.98	2.4635	.4527	1.0067	2.1441	.8509	1.1450	2.4557	.4624	1.0101	1.4429	.5125	.5105	14.74
RUN = 598													
-3.75	.2278	-.8144	-.4960	-.0360	.0852	-.2081	.2166	-.7761	-.4838	1.9002	.9401	.9375	20.10
-2.02	.4326	-.8240	-.4029	.1413	.0685	-.1146	.4198	-.7847	-.3902	1.8999	.9414	.9388	20.09
-.04	.5966	-.8171	-.3410	.2737	.0669	-.0519	.5816	-.7761	-.3276	1.9008	.9438	.9412	20.10
2.03	.7993	-.7960	-.2462	.4458	.0730	.0419	.7840	-.7583	-.2337	1.9014	.9407	.9382	20.11
4.04	1.0049	-.7657	-.1421	.6219	.0881	.1454	.9892	-.7308	-.1303	1.9025	.9384	.9358	20.11
6.08	1.2371	-.7239	-.0238	.8239	.1161	.2638	1.2201	-.6893	-.0119	1.9022	.9387	.9362	20.11
8.15	1.4244	-.6646	.0614	.9821	.1534	.3484	1.4070	-.6322	.0727	1.9023	.9369	.9343	20.11
10.07	1.6665	-.5980	.1689	1.1960	.2112	.4564	1.6471	-.5647	.1807	1.9007	.9386	.9360	20.10
12.10	1.8754	-.5087	.2702	1.3774	.2820	.5572	1.8557	-.4775	.2816	1.9012	.9370	.9345	20.10
13.97	2.0680	-.4112	.3609	1.5421	.3660	.6491	2.0451	-.3773	.3735	1.9018	.9410	.9384	20.11
16.00	2.2594	-.2950	.4573	1.7078	.4615	.7448	2.2366	-.2637	.4692	1.9005	.9388	.9362	20.10
18.02	2.4334	-.1730	.5433	1.8535	.5662	.8319	2.4075	-.1400	.5562	1.9007	.9421	.9396	20.10
19.98	2.6305	-.0268	.6590	2.0295	.6875	.9456	2.6074	.0007	.6700	1.9003	.9360	.9335	20.10
21.98	2.7995	.1169	.7674	2.1726	.8111	1.0547	2.7741	.1450	.7790	1.9017	.9379	.9353	20.11
23.99	2.9365	.2693	.8596	2.2850	.9420	1.1472	2.9095	.2973	.8715	1.9004	.9390	.9365	20.10

TABLE 5.- CONTINUED.

VED-WING 1/10-SCALE RESEARCH MODEL, VSTOL TEST NO. 204

ALPHA	CL	CD	CPM	CLE2	CDE2	CME2	CLCT	CDCT	CMCT	NPR	CT	CTRF	THETAJ
RUN = 599													
-3.74	.4418	-1.4269	-.6766	-.0232	.0689	-.1812	.4214	-1.3614	-.6549	2.5947	1.5687	1.5665	21.01
-2.03	.6064	-1.4213	-.6186	.0975	.0583	-.1238	.5846	-1.3581	-.5975	2.5949	1.5670	1.5647	21.01
-.01	.8245	-1.4025	-.5268	.2656	.0539	-.0335	.8022	-1.3445	-.5071	2.5955	1.5622	1.5600	21.00
2.01	1.0323	-1.3781	-.4416	.4215	.0594	.0524	1.0073	-1.3191	-.4213	2.5947	1.5641	1.5619	21.01
4.00	1.2699	-1.3459	-.3395	.6083	.0718	.1555	1.2417	-1.2854	-.3183	2.5930	1.5668	1.5646	21.02
6.04	1.4944	-1.2850	-.2354	.7877	.0989	.2561	1.4689	-1.2351	-.2177	2.5938	1.5561	1.5539	21.01
8.03	1.6886	-1.2345	-.1550	.9295	.1335	.3396	1.6563	-1.1762	-.1339	2.5969	1.5668	1.5645	21.00
10.06	1.9584	-1.1469	-.0400	1.1521	.1912	.4540	1.9251	-1.0918	-.0196	2.5954	1.5645	1.5622	21.01
12.02	2.1973	-1.0507	.0634	1.3455	.2592	.5576	2.1620	-.9965	.0839	2.5940	1.5648	1.5625	21.01
14.05	2.4291	-.9374	.1645	1.5293	.3452	.6598	2.3895	-.8810	.1863	2.5965	1.5690	1.5668	21.00
16.00	2.6266	-.8105	.2572	1.6876	.4351	.7505	2.5892	-.7610	.2768	2.5946	1.5621	1.5598	21.01
18.02	2.8268	-.6701	.3493	1.8440	.5426	.8428	2.7871	-.6210	.3692	2.5962	1.5632	1.5610	21.00
20.02	3.0371	-.5108	.4627	2.0148	.6638	.9552	2.9981	-.4660	.4815	2.5946	1.5594	1.5572	21.01
21.96	3.2240	-.3554	.5736	2.1601	.7868	1.0672	3.1810	-.3092	.5936	2.5959	1.5632	1.5610	21.00
23.99	3.3694	-.1933	.6538	2.2641	.9119	1.1581	3.3233	-.1472	.6844	2.5946	1.5653	1.5630	21.01
RUN = 600													
-3.71	.4379	-1.9372	-.8253	-.0822	.0650	-.2266	.4451	-1.9649	-.8336	3.1364	2.0713	2.0686	18.27
-2.05	.6239	-1.9243	-.7581	.0488	.0538	-.1623	.6065	-1.8642	-.7400	3.1273	2.0626	2.0599	18.26
-.01	.8755	-1.9081	-.6661	.2306	.0477	-.0703	.8561	-1.8493	-.6482	3.1308	2.0620	2.0594	18.26
2.03	1.1367	-1.8738	-.5583	.4246	.0518	.0356	1.1174	-1.8217	-.5423	3.1300	2.0556	2.0530	18.26
4.09	1.3749	-1.8284	-.4560	.5966	.0653	.1360	1.3559	-1.7822	-.4415	3.1201	2.0500	2.0474	18.25
6.09	1.5914	-1.7714	-.3673	.7477	.0932	.2249	1.5712	-1.7265	-.3531	3.1323	2.0493	2.0466	18.26
8.10	1.8863	-1.7030	-.2387	.9776	.1310	.3534	1.8644	-1.6588	-.2245	3.1307	2.0494	2.0468	18.26
10.07	2.1332	-1.6388	-.1647	1.1481	.1867	.4365	2.1441	-1.6590	-.1713	3.1565	2.0771	2.0744	18.29
12.06	2.3864	-1.5337	-.0601	1.3380	.2572	.5413	2.3975	-1.5527	-.0665	3.1542	2.0779	2.0752	18.28
14.01	2.6112	-1.4234	.0248	1.5001	.3340	.6275	2.6209	-1.4387	.0195	3.1588	2.0818	2.0791	18.29
16.03	2.8456	-1.2852	.1286	1.6748	.4303	.7304	2.8571	-1.3020	.1227	3.1542	2.0796	2.0769	18.28
17.97	3.0534	-1.1503	.2187	1.8199	.5315	.8232	3.0603	-1.1597	.2154	3.1561	2.0884	2.0857	18.29
20.02	3.2732	-.9787	.3287	1.9838	.6537	.9315	3.2838	-.9921	.3237	3.1544	2.0828	2.0802	18.29
22.00	3.4457	-.8084	.4304	2.1072	.7705	1.0305	3.4634	-.8293	.4225	3.1586	2.0726	2.0699	18.29
23.95	3.6245	-.6342	.5302	2.2304	.9012	1.1313	3.6402	-.6515	.5234	3.1556	2.0766	2.0739	18.29

TABLE 5.- CONTINUED.

VEO-WING 1/10-SCALE RESEARCH MODEL,VSTOL TEST NO. 204

ALPHA	CL	CD	CPM	CLE2	CDE2	CME2	CLCT	CDCT	CMCT	NPR	CT	CTRF	THETAJ
RUN = 601													
7.99	.7834	.1397	.3582	.7834	.1397	.3582	.7834	.1397	.3582	1.0001	0.0000	0.0000	0.00
7.99	.8684	.0725	.3578	.8234	.1659	.3857	.8668	.0760	.3588	1.0351	.1038	.1036	17.77
8.00	.9679	-.0532	.2916	.8785	.1306	.3491	.9656	-.0486	.2930	1.1333	.2051	.2043	17.93
7.98	1.0684	-.2477	.2144	.9046	.1240	.3281	1.0652	-.2405	.2166	1.3367	.4079	.4062	15.79
7.99	1.3640	-.5655	.0971	.9906	.1726	.3447	1.3506	-.5390	.1060	1.7803	.8297	.8272	18.84
8.00	1.6127	-.9043	-.0534	.9950	.1761	.3469	1.5894	-.8636	-.0383	2.2437	1.2470	1.2446	21.76
8.00	1.6805	-1.0896	-.1101	.9676	.1644	.3543	1.6584	-1.0508	-.0957	2.4581	1.4448	1.4425	21.62
7.99	1.7598	-1.2786	-.1716	.9769	.1698	.3391	1.7366	-1.2358	-.1565	2.6904	1.6487	1.6465	20.40
7.98	1.8652	-1.7234	-.2814	.9356	.1575	.3278	1.8648	-1.7227	-.2812	3.1772	2.1008	2.0981	18.32
7.99	2.4680	-2.7358	-.7081	.9129	.1955	.3323	2.4568	-2.7146	-.7006	3.5651	3.3241	3.3183	19.95
8.00	3.2384	-4.1445	-1.2238	.9300	.2253	.3184	3.2149	-4.1000	-1.2081	3.5412	4.9504	4.9420	19.85
RUN = 602													
-3.77	-.0333	.0473	-.2421	-.0333	.0473	-.2421	-.0333	.0473	-.2421	1.0054	0.0000	0.0000	0.00
-1.98	.1328	.0359	-.1474	.1328	.0359	-.1474	.1328	.0359	-.1474	1.0056	0.0000	0.0000	0.00
.03	.2543	.0353	-.0808	.2543	.0353	-.0808	.2543	.0353	-.0808	1.0061	0.0000	0.0000	0.00
1.99	.4242	.0386	.0271	.4242	.0386	.0271	.4242	.0386	.0271	1.0058	0.0000	0.0000	0.00
4.03	.6104	.0533	.1417	.6104	.0533	.1417	.6104	.0533	.1417	1.0051	0.0000	0.0000	0.00
6.01	.7617	.0767	.2402	.7617	.0767	.2402	.7617	.0767	.2402	1.0051	0.0000	0.0000	0.00
8.07	.9284	.1156	.3418	.9284	.1156	.3418	.9284	.1156	.3418	1.0058	0.0000	0.0000	0.00
10.04	1.1122	.1659	.4481	1.1122	.1659	.4481	1.1122	.1659	.4481	1.0050	0.0000	0.0000	0.00
12.06	1.2742	.2310	.5496	1.2742	.2310	.5496	1.2742	.2310	.5496	1.0052	0.0000	0.0000	0.00
13.98	1.4400	.3045	.6496	1.4400	.3045	.6496	1.4400	.3045	.6496	1.0050	0.0000	0.0000	0.00
16.07	1.5771	.3905	.7403	1.5771	.3905	.7403	1.5771	.3905	.7403	1.0040	0.0000	0.0000	0.00
17.99	1.6872	.4767	.8251	1.6872	.4767	.8251	1.6872	.4767	.8251	1.0036	0.0000	0.0000	0.00
19.99	1.8087	.5727	.9333	1.8087	.5727	.9333	1.8087	.5727	.9333	1.0030	0.0000	0.0000	0.00
21.97	1.9115	.6753	1.0447	1.9115	.6753	1.0447	1.9115	.6753	1.0447	1.0016	0.0000	0.0000	0.00
23.97	1.9968	.7825	1.1473	1.9968	.7825	1.1473	1.9968	.7825	1.1473	1.0003	0.0000	0.0000	0.00

TABLE 5.- CONTINUED.

VEO-WING 1/10-SCALE RESEARCH MODEL, VSTOL TEST NO. 204

ALPHA	CL	CD	CPM	CLE2	CDE2	CME2	CLCT	CDCT	CMCT	NPR	CT	CTRF	THETAJ
RUN = 603													
-3.75	-.0115	.0454	-.2184	-.0115	.0454	-.2184	-.0115	.0454	-.2184	1.0045	0.0000	0.0000	0.00
-2.08	.1188	.0350	-.1491	.1188	.0350	-.1491	.1188	.0350	-.1491	1.0047	0.0000	0.0000	0.00
.08	.2990	.0311	-.0477	.2990	.0311	-.0477	.2990	.0311	-.0477	1.0046	0.0000	0.0000	0.00
2.02	.4477	.0362	.0428	.4477	.0362	.0428	.4477	.0362	.0428	1.0045	0.0000	0.0000	0.00
3.99	.6003	.0508	.1374	.6003	.0508	.1374	.6003	.0508	.1374	1.0042	0.0000	0.0000	0.00
5.95	.7592	.0756	.2377	.7592	.0756	.2377	.7592	.0756	.2377	1.0042	0.0000	0.0000	0.00
8.01	.9089	.1111	.3313	.9089	.1111	.3313	.9089	.1111	.3313	1.0042	0.0000	0.0000	0.00
10.04	1.0979	.1601	.4419	1.0979	.1601	.4419	1.0979	.1601	.4419	1.0041	0.0000	0.0000	0.00
12.04	1.2685	.2230	.5465	1.2685	.2230	.5465	1.2685	.2230	.5465	1.0038	0.0000	0.0000	0.00
13.97	1.4212	.2950	.6446	1.4212	.2950	.6446	1.4212	.2950	.6446	1.0030	0.0000	0.0000	0.00
16.00	1.5668	.3796	.7355	1.5668	.3796	.7355	1.5668	.3796	.7355	1.0023	0.0000	0.0000	0.00
17.96	1.6817	.4662	.8221	1.6817	.4662	.8221	1.6817	.4662	.8221	1.0019	0.0000	0.0000	0.00
19.98	1.8051	.5654	.9306	1.8051	.5654	.9306	1.8051	.5654	.9306	1.0009	0.0000	0.0000	0.00
21.99	1.9034	.6656	1.0425	1.9034	.6656	1.0425	1.9034	.6656	1.0425	1.0000	0.0000	0.0000	0.00
24.00	1.9982	.7791	1.1428	1.9982	.7791	1.1428	1.9982	.7791	1.1428	1.0000	0.0000	0.0000	0.00
RUN = 605													
-3.66	.2064	-.4574	-.3869	.0995	.0496	-.2447	.2027	-.4397	-.3819	1.4509	.5182	.5181	15.57
-1.94	.3677	-.4615	-.3047	.2455	.0421	-.1625	.3634	-.4438	-.2997	1.4499	.5183	.5182	15.57
.07	.5363	-.4571	-.2202	.3965	.0423	-.0780	.5313	-.4391	-.2151	1.4505	.5186	.5186	15.57
2.05	.7317	-.4456	-.1202	.5742	.0506	.0225	.7255	-.4259	-.1146	1.4514	.5206	.5206	15.56
4.05	.8960	-.4200	-.0278	.7211	.0707	.1150	.8890	-.4003	-.0221	1.4520	.5209	.5209	15.56
6.13	1.0883	-.3820	.0886	.8965	.1003	.2309	1.0812	-.3643	.0938	1.4531	.5190	.5190	15.56
8.11	1.2619	-.3388	.1779	1.0531	.1376	.3205	1.2538	-.3203	.1834	1.4531	.5202	.5202	15.56
10.13	1.4474	-.2780	.2792	1.2225	.1896	.4205	1.4392	-.2609	.2834	1.4526	.5190	.5189	15.56
11.96	1.6355	-.2063	.3818	1.3953	.2547	.5244	1.6263	-.1887	.3873	1.4526	.5199	.5199	15.56
13.93	1.8031	-.1139	.4691	1.5466	.3398	.6120	1.7926	-.0955	.4750	1.4530	.5212	.5212	15.56
15.97	1.9935	-.0083	.5741	1.7206	.4365	.7172	1.9821	.0104	.5801	1.4523	.5219	.5218	15.56
17.90	2.1390	.0959	.6615	1.8504	.5326	.8050	2.1260	.1155	.6679	1.4530	.5235	.5235	15.56
20.02	2.3018	.2247	.7737	1.9989	.6482	.9165	2.2898	.2416	.7794	1.4521	.5207	.5207	15.56
21.99	2.4341	.3479	.8943	2.1165	.7609	1.0272	2.4213	.3646	.8901	1.4513	.5210	.5210	15.56
24.06	2.5449	.4823	.9869	2.2127	.8835	1.1297	2.5315	.4984	.9926	1.4517	.5209	.5209	15.56

TABLE 5.- CONTINUED.

VEO-WING 1/10-SCALE RESEARCH MODEL,VSTOL TEST NO. 204

ALPHA	CL	CD	CPM	CLE2	CDE2	CME2	CLCT	CDCT	CMCT	NPR	CT	CTRF	THETAJ
RUN = 606													
-3.72	.3683	-.8116	-.5506	.1025	.0791	-.2645	.3599	-.7833	-.5415	1.8897	.9295	.9295	20.34
-1.97	.5786	-.8130	-.4502	.2859	.0689	-.1643	.5694	-.7853	-.4412	1.8886	.9292	.9292	20.33
.03	.7493	-.8015	-.3799	.4254	.0713	-.0925	.7385	-.7724	-.3694	1.8885	.9310	.9309	20.33
2.09	.9810	-.7839	-.2623	.6258	.0776	.0243	.9689	-.7544	-.2525	1.8873	.9319	.9318	20.32
4.08	1.1537	-.7435	-.1693	.7712	.0998	.1155	1.1430	-.7198	-.1613	1.8874	.9260	.9260	20.32
6.09	1.3471	-.6977	-.0639	.9360	.1303	.2205	1.3362	-.6758	-.0563	1.8867	.9244	.9244	20.32
8.16	1.5648	-.6360	.0380	1.1232	.1778	.3229	1.5524	-.6132	.0460	1.8879	.9259	.9259	20.32
10.12	1.7798	-.5635	.1436	1.3109	.2344	.4282	1.7669	-.5415	.1514	1.8869	.9254	.9254	20.32
12.13	1.9806	-.4755	.2464	1.4836	.3060	.5314	1.9665	-.4534	.2545	1.8876	.9262	.9262	20.32
13.98	2.1810	-.3752	.3481	1.6596	.3892	.6326	2.1667	-.3543	.3558	1.8861	.9253	.9253	20.31
15.91	2.3466	-.2635	.4317	1.7997	.4830	.7163	2.3316	-.2430	.4395	1.8867	.9254	.9254	20.32
17.97	2.5383	-.1343	.5299	1.9627	.5953	.8157	2.5201	-.1112	.5390	1.8853	.9294	.9293	20.31
19.99	2.7062	.0110	.6334	2.1079	.7165	.9179	2.6900	.0302	.6411	1.8857	.9251	.9251	20.31
22.08	2.8669	.1634	.7474	2.2434	.8462	1.0318	2.8503	.1816	.7550	1.8865	.9247	.9247	20.32
24.01	2.9980	.3075	.8458	2.3506	.9704	1.1308	2.9794	.3266	.8540	1.8857	.9267	.9266	20.31
RUN = 607													
-3.70	.5687	-1.4210	-.7418	.1020	.0532	-.2478	.5547	-1.3768	-.7270	2.5775	1.5464	1.5464	21.27
-1.93	.7466	-1.4138	-.6631	.2339	.0462	-.1685	.7309	-1.3691	-.6479	2.5747	1.5474	1.5474	21.28
.08	.9648	-1.3950	-.5744	.4011	.0458	-.0799	.9477	-1.3511	-.5594	2.5744	1.5471	1.5471	21.28
2.05	1.1916	-1.3690	-.4755	.5772	.0548	.0202	1.1715	-1.3224	-.4593	2.5727	1.5508	1.5508	21.29
4.05	1.4088	-1.3157	-.3707	.7496	.0768	.1217	1.3914	-1.2790	-.3577	2.5741	1.5407	1.5407	21.29
6.06	1.6120	-1.2759	-.2798	.8999	.1035	.2158	1.5880	-1.2294	-.2631	2.5820	1.5524	1.5524	21.24
8.00	1.8309	-1.2049	-.1801	1.0746	.1458	.3143	1.8074	-1.1630	-.1647	2.5805	1.5480	1.5481	21.25
9.93	2.0550	-1.1305	-.0824	1.2515	.1974	.4131	2.0280	-1.0859	-.0658	2.5814	1.5521	1.5521	21.25
11.98	2.2975	-1.0245	.0339	1.4476	.2724	.5292	2.2698	-.9822	.0501	2.5790	1.5506	1.5506	21.26
13.99	2.5068	-.9088	.1320	1.6129	.3564	.6267	2.4785	-.8687	.1477	2.5794	1.5490	1.5490	21.26
15.90	2.7180	-.7853	.2314	1.7812	.4506	.7267	2.6873	-.7448	.2476	2.5785	1.5508	1.5508	21.26
17.99	2.9403	-.6330	.3364	1.9574	.5701	.8325	2.9064	-.5916	.3535	2.5804	1.5535	1.5535	21.25
19.97	3.1226	-.4812	.4352	2.1000	.6857	.9308	3.0886	-.4424	.4517	2.5787	1.5516	1.5516	21.26
22.00	3.3042	-.3130	.5514	2.2420	.8157	1.0464	3.2700	-.2767	.5673	2.5786	1.5499	1.5499	21.26
24.06	3.4434	-.1480	.6530	2.3410	.9422	1.1482	3.4075	-.1125	.6691	2.5788	1.5504	1.5504	21.26

TABLE 5.- CONTINUED.

VEO-WING 1/10-SCALE RESEARCH MODEL,VSTOL TEST NO. 204

ALPHA	CL	CD	CPM	CLE2	CDE2	CME2	CLCT	CDCT	CMCT	NPR	CT	CTRF	THETAJ
RUN = 608													
-3.70	.6058	-1.9546	-.8776	.0723	.0534	-.2706	.6115	-1.9762	-.8841	3.1499	2.0777	2.0777	18.58
-2.00	.8165	-1.9476	-.7953	.2239	.0444	-.1885	.8227	-1.9684	-.8016	3.1441	2.0783	2.0783	18.57
.01	1.0594	-1.9222	-.6980	.3987	.0431	-.0925	1.0679	-1.9474	-.7057	3.1463	2.0734	2.0734	18.57
2.03	1.2923	-1.8906	-.6025	.5629	.0505	.0028	1.3016	-1.9152	-.6102	3.1421	2.0737	2.0737	18.56
4.06	1.5354	-1.8469	-.5034	.7360	.0705	.1033	1.5441	-1.8678	-.5100	3.1464	2.0774	2.0774	18.57
6.09	1.7397	-1.7797	-.4144	.8763	.1000	.1901	1.7110	-1.7174	-.3943	3.1503	2.0685	2.0685	18.58
8.07	2.0104	-1.7180	-.2990	1.0785	.1391	.3080	2.0203	-1.7378	-.3055	3.1487	2.0778	2.0778	18.58
10.07	2.2598	-1.6331	-.1904	1.2627	.1926	.4173	2.2693	-1.6504	-.1962	3.1484	2.0802	2.0802	18.58
12.00	2.4862	-1.5204	-.0902	1.4324	.2631	.5151	2.5006	-1.5449	-.0985	3.1494	2.0716	2.0716	18.56
13.98	2.7164	-1.3978	.0037	1.6020	.3475	.6087	2.7321	-1.4225	-.0049	3.1499	2.0707	2.0707	18.58
16.02	2.9492	-1.2598	.1058	1.7728	.4458	.7112	2.9652	-1.2829	.0976	3.1493	2.0719	2.0719	18.58
18.07	3.1551	-1.1087	.1940	1.9182	.5534	.7995	3.1719	-1.1313	.1858	3.1520	2.0718	2.0718	18.59
19.94	3.3645	-.9552	.3059	2.0724	.6678	.9120	3.3803	-.9751	.2984	3.1498	2.0745	2.0745	18.58
21.98	3.5521	-.7904	.4137	2.1976	.7921	1.0222	3.5631	-.8033	.4087	3.1486	2.0830	2.0830	18.58
24.02	3.7130	-.6062	.5191	2.3069	.9225	1.1262	3.7286	-.6231	.5124	3.1529	2.0771	2.0771	18.59
RUN = 609													
8.00	.9155	.1362	.3247	.9155	.1362	.3247	.9155	.1362	.3247	1.0018	0.0000	0.0000	0.00
8.00	.9526	.0737	.3118	.9088	.1666	.3414	.9515	.0762	.3126	1.0341	.1027	.1027	17.27
8.02	1.1186	-.0496	.2807	1.0318	.1360	.3402	1.1165	-.0451	.2822	1.1334	.2050	.2050	17.03
8.03	1.2341	-.2477	.2044	1.0649	.1309	.3206	1.2281	-.2342	.2086	1.3430	.4147	.4147	16.05
8.05	1.4677	-.5594	.0557	1.0871	.1750	.3044	1.4552	-.5353	.0638	1.7805	.8271	.8271	19.34
8.07	1.7530	-.8919	-.0628	1.1363	.1761	.3358	1.7364	-.8631	-.0520	2.2314	1.2332	1.2332	21.93
8.06	1.8841	-1.3025	-.2154	1.0876	.1661	.3040	1.8980	-1.3282	-.2245	2.7169	1.6707	1.6707	20.41
8.07	2.0157	-1.7023	-.3019	1.0805	.1596	.3077	2.0230	-1.7170	-.3067	3.1602	2.0836	2.0836	18.60
7.98	2.6416	-2.7897	-.7591	1.0455	.1858	.3123	2.6527	-2.8103	-.7665	3.6064	3.3766	3.3766	20.23
7.97	3.4266	-4.2390	-1.2933	1.0551	.2023	.2970	3.4102	-4.2082	-1.2823	3.5819	5.0349	5.0348	20.13
RUN = 610													
-3.66	.0820	.0633	-.2750	.0820	.0633	-.2750	.0820	.0633	-.2750	1.0046	0.0000	0.0000	0.00
-2.04	.2403	.0536	-.1780	.2403	.0536	-.1780	.2403	.0536	-.1780	1.0047	0.0000	0.0000	0.00
-.01	.4133	.0557	-.0804	.4133	.0557	-.0804	.4133	.0557	-.0804	1.0042	0.0000	0.0000	0.00
2.07	.5482	.0627	.0082	.5482	.0627	.0082	.5482	.0627	.0082	1.0048	0.0000	0.0000	0.00
4.09	.7169	.0858	.1172	.7169	.0858	.1172	.7169	.0858	.1172	1.0042	0.0000	0.0000	0.00
6.00	.8499	.1096	.2078	.8499	.1096	.2078	.8499	.1096	.2078	1.0048	0.0000	0.0000	0.00
8.03	1.0446	.1489	.3260	1.0446	.1489	.3260	1.0446	.1489	.3260	1.0059	0.0000	0.0000	0.00
10.04	1.2088	.2018	.4240	1.2088	.2018	.4240	1.2088	.2018	.4240	1.0046	0.0000	0.0000	0.00
12.04	1.3678	.2667	.5241	1.3678	.2667	.5241	1.3678	.2667	.5241	1.0041	0.0000	0.0000	0.00
13.98	1.5001	.3487	.6077	1.5001	.3487	.6077	1.5001	.3487	.6077	1.0037	0.0000	0.0000	0.00
15.94	1.6590	.4339	.7105	1.6590	.4339	.7105	1.6590	.4339	.7105	1.0031	0.0000	0.0000	0.00
18.03	1.7912	.5295	.8157	1.7912	.5295	.8157	1.7912	.5295	.8157	1.0028	0.0000	0.0000	0.00
20.01	1.8826	.6224	.9160	1.8826	.6224	.9160	1.8826	.6224	.9160	1.0024	0.0000	0.0000	0.00
21.96	1.9773	.7226	1.0365	1.9773	.7226	1.0365	1.9773	.7226	1.0365	1.0011	0.0000	0.0000	0.00
23.97	2.0464	.8258	1.1319	2.0464	.8258	1.1319	2.0464	.8258	1.1319	1.0000	0.0000	0.0000	0.00

TABLE 5.- CONTINUED.

VEO-WING 1/10-SCALE RESEARCH MODEL,VSTOL TEST NO. 204

ALPHA	CL	CD	CPM	CLE2	CDE2	CME2	CLCT	CDCT	CMCT	NPR	CT	CTRF	THETAJ
RUN = 612													
-3.73	.2617	-.4695	-.4585	.1387	.0553	-.3025	.2528	-.4315	-.4472	1.4523	.5390	.5390	16.93
-2.09	.4310	-.4654	-.3734	.2936	.0534	-.2181	.4216	-.4299	-.3627	1.4511	.5367	.5367	16.92
.00	.6202	-.4593	-.2794	.4634	.0557	-.1236	.6090	-.4226	-.2683	1.4516	.5383	.5383	16.93
1.98	.8042	-.4419	-.1713	.6301	.0664	-.0160	.7921	-.4066	-.1606	1.4499	.5373	.5372	16.92
3.99	.9832	-.4102	-.0722	.7923	.0897	.0825	.9706	-.3773	-.0620	1.4482	.5352	.5351	16.91
6.05	1.1722	-.3685	.0398	.9649	.1209	.1933	1.1599	-.3394	.0489	1.4462	.5315	.5315	16.90
8.01	1.3564	-.3172	.1425	1.1336	.1626	.2953	1.3442	-.2908	.1509	1.4450	.5291	.5290	16.90
10.04	1.5554	-.2400	.2426	1.3159	.2314	.3952	1.5423	-.2143	.2509	1.4438	.5288	.5288	16.89
12.00	1.7349	-.1595	.3400	1.4812	.3004	.4915	1.7227	-.1374	.3473	1.4422	.5253	.5253	16.89
13.99	1.9221	-.0643	.4462	1.6537	.3847	.5969	1.9102	-.0444	.4528	1.4401	.5231	.5231	16.88
15.99	2.0863	.0388	.5364	1.8014	.4799	.6877	2.0727	.0599	.5436	1.4397	.5251	.5251	16.87
17.96	2.2418	.1463	.6360	1.9407	.5789	.7878	2.2263	.1685	.6437	1.4397	.5270	.5270	16.88
19.97	2.3788	.2654	.7414	2.0621	.6880	.8936	2.3619	.2879	.7495	1.4399	.5281	.5281	16.88
22.01	2.4960	.3895	.8605	2.1650	.8001	1.0125	2.4788	.4109	.8684	1.4396	.5275	.5274	16.87
23.98	2.5932	.5180	.9613	2.2492	.9158	1.1129	2.5763	.5376	.9688	1.4407	.5259	.5259	16.88
RUN = 613													
-3.70	.4091	-.7895	-.5619	.1583	.1008	-.2732	.4023	-.7654	-.5541	1.8551	.9250	.9250	19.44
-2.07	.5680	-.7837	-.4888	.2931	.0954	-.2013	.5617	-.7635	-.4822	1.8495	.9211	.9211	19.43
.02	.7845	-.7750	-.3856	.4768	.0961	-.0971	.7766	-.7524	-.3781	1.8486	.9239	.9239	19.43
2.02	.9705	-.7528	-.2939	.6323	.1079	-.0052	.9614	-.7298	-.2862	1.8470	.9248	.9247	19.43
4.02	1.1642	-.7101	-.1864	.8002	.1288	.0991	1.1584	-.6968	-.1819	1.8454	.9146	.9145	19.43
6.02	1.3724	-.6722	-.0722	.9768	.1589	.2151	1.3636	-.6537	-.0658	1.8539	.9205	.9205	19.44
8.01	1.5781	-.6163	.0218	1.1527	.2027	.3099	1.5675	-.5960	.0290	1.8504	.9229	.9228	19.43
10.03	1.7794	-.5447	.1166	1.3234	.2623	.4059	1.7661	-.5212	.1250	1.8517	.9270	.9269	19.44
12.02	1.9831	-.4476	.2174	1.5013	.3400	.5056	1.9709	-.4277	.2247	1.8512	.9233	.9232	19.43
14.01	2.1562	-.3520	.3081	1.6466	.4196	.5967	2.1425	-.3313	.3158	1.8524	.9247	.9247	19.44
16.00	2.3651	-.2304	.4162	1.8294	.5225	.7046	2.3511	-.2108	.4237	1.8515	.9241	.9240	19.44
18.03	2.5195	-.1155	.5064	1.9550	.6212	.7961	2.5024	-.0931	.5152	1.8521	.9282	.9281	19.44
19.99	2.6897	.0249	.6216	2.1027	.7387	.9100	2.6743	.0436	.6291	1.8514	.9242	.9241	19.43
21.97	2.8145	.1542	.7266	2.2012	.8498	1.0161	2.7964	.1748	.7352	1.8511	.9274	.9274	19.43
23.98	2.9317	.3029	.8424	2.2972	.9737	1.1306	2.9156	.3199	.8497	1.8512	.9234	.9234	19.43

TABLE 5.- CONTINUED.

VEO-WING 1/10-SCALE RESEARCH MODEL, VSTOL TEST NO. 204

ALPHA	CL	CD	CPM	CLE2	CDE2	CME2	CLCT	CDCT	CMCT	NPR	CT	CTRF	THETAJ
RUN = 614													
-3.69	.6065	-1.3869	-.7350	.1690	.0864	-.2540	.5960	-1.3516	-.7235	2.5166	1.5369	1.5369	20.23
-2.02	.7641	-1.3656	-.6689	.2890	.0826	-.1928	.7565	-1.3427	-.6614	2.5019	1.5241	1.5241	20.18
.03	.9925	-1.3518	-.5774	.4642	.0833	-.0996	.9824	-1.3244	-.5683	2.5023	1.5292	1.5293	20.18
1.99	1.2023	-1.3188	-.4766	.6275	.0925	-.0006	1.1933	-1.2967	-.4691	2.4999	1.5238	1.5239	20.17
4.03	1.4219	-1.2731	-.3698	.7982	.1146	.1055	1.4131	-1.2536	-.3632	2.5020	1.5214	1.5214	20.18
6.04	1.6408	-1.2209	-.2655	.9674	.1456	.2106	1.6305	-1.1999	-.2582	2.5057	1.5234	1.5234	20.19
8.04	1.8623	-1.1617	-.1738	1.1372	.1889	.3053	1.8467	-1.1326	-.1635	2.5060	1.5330	1.5330	20.19
10.06	2.1109	-1.0675	-.0643	1.3411	.2519	.4133	2.0970	-1.0437	-.0557	2.5077	1.5275	1.5275	20.20
12.01	2.3162	-.9671	.0352	1.5046	.3215	.5112	2.3040	-.9478	.0424	2.5062	1.5229	1.5229	20.19
13.99	2.5157	-.8508	.1343	1.6617	.4068	.6094	2.5044	-.8342	.1406	2.5052	1.5201	1.5201	20.19
15.98	2.7403	-.7209	.2282	1.8397	.5111	.7052	2.7249	-.6998	.2364	2.5055	1.5261	1.5262	20.19
17.98	2.9437	-.5808	.3253	1.9991	.6208	.8036	2.9261	-.5585	.3347	2.5059	1.5284	1.5284	20.19
20.00	3.1168	-.4215	.4345	2.1353	.7404	.9100	3.1033	-.4055	.4411	2.5058	1.5210	1.5210	20.19
21.98	3.2740	-.2802	.5369	2.2434	.8576	1.0168	3.2504	-.2541	.5479	2.5071	1.5353	1.5353	20.19
23.98	3.4060	-.1115	.6511	2.3416	.9839	1.1286	3.3869	-.0919	.6597	2.5066	1.5274	1.5274	20.19
RUN = 615													
-3.68	.7663	-1.8932	-.9113	.1732	.0848	-.2625	.7477	-1.8310	-.8909	3.0940	2.0650	2.0650	20.37
-2.01	.9382	-1.8718	-.8545	.2914	.0794	-.2092	.9207	-1.8190	-.8370	3.0864	2.0556	2.0556	20.35
-.00	1.1939	-1.8520	-.7513	.4780	.0803	-.1048	1.1728	-1.7951	-.7322	3.0790	2.0607	2.0607	20.33
2.03	1.4229	-1.8152	-.6606	.6390	.0903	-.0143	1.3999	-1.7593	-.6416	3.0769	2.0605	2.0605	20.33
4.04	1.6499	-1.7540	-.5491	.8058	.1109	.0926	1.6305	-1.7112	-.5344	3.0700	2.0470	2.0470	20.31
6.05	1.8821	-1.7010	-.4467	.9708	.1387	.1966	1.8586	-1.6535	-.4301	3.0655	2.0530	2.0531	20.30
8.01	2.0968	-1.6205	-.3550	1.1257	.1821	.2864	2.0743	-1.5786	-.3401	3.0624	2.0475	2.0475	20.30
9.92	2.3511	-1.5217	-.2456	1.3236	.2429	.3940	2.3300	-1.4854	-.2324	3.0603	2.0420	2.0420	20.29
12.01	2.5986	-1.4009	-.1357	1.5118	.3190	.5012	2.5802	-1.3718	-.1249	3.0537	2.0345	2.0345	20.28
13.99	2.8056	-1.2678	-.0348	1.6685	.4017	.5971	2.7944	-1.2514	-.0286	3.0463	2.0199	2.0199	20.27
15.99	3.0472	-1.1206	.0536	1.8514	.5107	.6961	3.0338	-1.1024	.0706	3.0408	2.0227	2.0227	20.26
17.99	3.2760	-.9965	.1423	1.9962	.6203	.7902	3.2375	-.9479	.1617	3.0953	2.0620	2.0620	20.37
19.99	3.4711	-.8308	.2542	2.1389	.7385	.9000	3.4332	-.7862	.2725	3.0794	2.0585	2.0585	20.33
22.01	3.6477	-.6616	.3737	2.2759	.8658	1.0218	3.6230	-.6125	.3946	3.0759	2.0664	2.0664	20.33
23.98	3.7938	-.4809	.4759	2.3597	.9882	1.1198	3.7568	-.4430	.4925	3.0755	2.0530	2.0531	20.33
RUN = 616													
8.00	1.0227	.1686	.3204	1.0227	.1686	.3204	1.0227	.1686	.3204	1.0020	0.0000	0.0000	0.00
7.99	1.0574	.1092	.2879	1.0023	.2036	.3173	1.0527	.1172	.2903	1.0402	.1092	.1093	22.26
8.01	1.1884	-.0088	.2485	1.0973	.1764	.3061	1.1855	-.0031	.2503	1.1306	.2064	.2064	18.17
8.01	1.2861	-.2068	.1744	1.1168	.1634	.2877	1.2831	-.2003	.1764	1.3234	.4071	.4071	16.56
8.00	1.5114	-.5157	.0429	1.1385	.2112	.2973	1.5036	-.5005	.0482	1.7411	.8170	.8170	19.15
8.00	1.7211	-.8799	-.0794	1.1490	.2132	.3020	1.7054	-.8499	-.0679	2.1785	1.2338	1.2338	19.63
7.99	1.9440	-1.2343	-.2137	1.1629	.2045	.3035	1.9263	-1.2017	-.2020	2.6282	1.6371	1.6371	20.51
8.00	2.1386	-1.6134	-.3445	1.1584	.2035	.3035	2.1080	-1.5567	-.3243	3.0852	2.0644	2.0645	20.35
8.00	2.8448	-2.6227	-.8459	1.1448	.2449	.3040	2.8275	-2.5936	-.8343	3.5341	3.3338	3.3336	22.66
8.01	3.6649	-4.0131	-1.3927	1.1481	.2660	.3061	3.6322	-3.9575	-1.3706	3.4983	4.9645	4.9643	22.46

TABLE 5.- CONTINUED.

VEO-WING 1/10-SCALE RESEARCH MODEL, VSTOL TEST NO. 204

ALPHA	CL	CD	CPM	CLE2	CDE2	CME2	CLCT	CDCT	CMCT	NPR	CT	CTRF	THETAJ
RUN = 617													
-3.81	.0752	.0580	-.2668	.0752	.0580	-.2668	.0752	.0580	-.2668	1.0033	0.0000	0.0000	0.00
-1.99	.2223	.0521	-.1839	.2223	.0521	-.1839	.2223	.0521	-.1839	1.0034	0.0000	0.0000	0.00
-.03	.3780	.0546	-.1028	.3780	.0546	-.1028	.3780	.0546	-.1028	1.0025	0.0000	0.0000	0.00
1.95	.5522	.0603	.0091	.5522	.0603	.0091	.5522	.0603	.0091	1.0028	0.0000	0.0000	0.00
4.04	.7119	.0826	.1077	.7119	.0826	.1077	.7119	.0826	.1077	1.0021	0.0000	0.0000	0.00
6.03	.8690	.1108	.2085	.8690	.1108	.2085	.8690	.1108	.2085	1.0023	0.0000	0.0000	0.00
8.01	1.0251	.1492	.2993	1.0251	.1492	.2993	1.0251	.1492	.2993	1.0022	0.0000	0.0000	0.00
10.06	1.2088	.2041	.4092	1.2088	.2041	.4092	1.2088	.2041	.4092	1.0019	0.0000	0.0000	0.00
12.01	1.3646	.2730	.5074	1.3646	.2730	.5074	1.3646	.2730	.5074	1.0018	0.0000	0.0000	0.00
14.00	1.4977	.3448	.6008	1.4977	.3448	.6008	1.4977	.3448	.6008	1.0015	0.0000	0.0000	0.00
16.00	1.6660	.4374	.6996	1.6660	.4374	.6996	1.6660	.4374	.6996	1.0004	0.0000	0.0000	0.00
17.98	1.7644	.5212	.7852	1.7644	.5212	.7852	1.7644	.5212	.7852	1.0001	0.0000	0.0000	0.00
20.01	1.8761	.6202	.9032	1.8761	.6202	.9032	1.8761	.6202	.9032	1.0002	0.0000	0.0000	0.00
22.01	1.9571	.7203	1.0078	1.9571	.7203	1.0078	1.9571	.7203	1.0078	1.0000	0.0000	0.0000	0.00
23.99	2.0516	.8328	1.1178	2.0516	.8328	1.1178	2.0516	.8328	1.1178	1.0000	0.0000	0.0000	0.00
RUN = 619													
-3.77	.3730	-.3903	-.4159	.2558	.0711	-.2912	.3711	-.3827	-.4138	1.4751	.5083	.4761	18.02
-2.05	.4754	-.3859	-.3642	.3441	.0729	-.2392	.4729	-.3774	-.3619	1.4750	.5095	.4772	18.02
.01	.6740	-.3784	-.2631	.5263	.0755	-.1380	.6712	-.3698	-.2607	1.4760	.5097	.4774	18.02
2.00	.8942	-.3605	-.1449	.7308	.0879	-.0199	.8912	-.3522	-.1426	1.4746	.5095	.4773	18.02
4.00	1.0635	-.3290	-.0577	.8846	.1132	.0673	1.0602	-.3209	-.0554	1.4751	.5093	.4770	18.02
5.98	1.2286	-.2878	.0283	1.0348	.1474	.1531	1.2253	-.2804	.0305	1.4756	.5087	.4764	18.02
8.02	1.4572	-.2301	.1396	1.2481	.1978	.2643	1.4537	-.2230	.1417	1.4757	.5085	.4763	18.02
10.02	1.6615	-.1548	.2481	1.4383	.2643	.3724	1.6585	-.1491	.2498	1.4745	.5069	.4748	18.02
12.00	1.8341	-.0739	.3348	1.5966	.3372	.4591	1.8309	-.0683	.3365	1.4743	.5069	.4748	18.02
14.01	2.0844	.0143	.4363	1.8218	.4344	.5662	2.0701	.0372	.4434	1.4966	.5288	.4954	18.00
16.00	2.2515	.1336	.5195	1.9822	.5327	.6456	2.2442	.1445	.5229	1.4802	.5139	.4814	18.01
18.00	2.4292	.2600	.6123	2.1468	.6485	.7381	2.4222	.2696	.6154	1.4775	.5127	.4803	18.01
19.98	2.5492	.3832	.7102	2.2548	.7600	.8354	2.5432	.3909	.7128	1.4765	.5105	.4782	18.02
21.99	2.6463	.5104	.8272	2.3402	.8750	.9519	2.6413	.5163	.8293	1.4736	.5082	.4760	18.02
23.99	2.7475	.6442	.9481	2.4291	.9976	1.0727	2.7426	.6496	.9500	1.4716	.5079	.4757	18.02

TABLE 5.- CONTINUED.

VEO-WING 1/10-SCALE RESEARCH MODEL, VSTOL TEST NO. 204

ALPHA	CL	CD	CPM	CLE2	CDE2	CME2	CLCT	CDCT	CMCT	NPR	CT	CTRF	THETAJ
RUN = 620													
-3.70	.5579	-.7153	-.5376	.3177	.0961	-.3047	.5551	-.7059	-.5348	1.9180	.9106	.8462	20.19
-2.02	.7353	-.7095	-.4573	.4717	.0938	-.2248	.7325	-.7010	-.4549	1.9160	.9096	.8454	20.18
.01	.9195	-.6955	-.3725	.6265	.1011	-.1389	.9152	-.6839	-.3691	1.9168	.9133	.8488	20.19
2.00	1.1165	-.6625	-.2776	.7987	.1171	-.0460	1.1144	-.6574	-.2761	1.9164	.9058	.8419	20.19
4.03	1.3295	-.6291	-.1843	.9807	.1449	.0494	1.3242	-.6174	-.1808	1.9258	.9138	.8490	20.23
6.05	1.5382	-.5772	-.0857	1.1625	.1836	.1479	1.5328	-.5661	-.0823	1.9249	.9133	.8485	20.23
8.05	1.7658	-.5092	.0037	1.3636	.2380	.2374	1.7599	-.4982	.0071	1.9281	.9135	.8486	20.24
10.05	1.9957	-.4222	.0984	1.5688	.3091	.3316	1.9904	-.4130	.1013	1.9258	.9114	.8467	20.23
12.00	2.2100	-.3326	.1943	1.7576	.3849	.4279	2.2035	-.3224	.1976	1.9258	.9130	.8482	20.23
13.99	2.4334	-.2214	.2904	1.9571	.4786	.5236	2.4274	-.2126	.2933	1.9275	.9114	.8467	20.24
16.00	2.6452	-.0975	.3805	2.1427	.5883	.6146	2.6369	-.0862	.3844	1.9256	.9151	.8502	20.23
17.99	2.8479	.0418	.4765	2.3206	.7115	.7111	2.8379	.0545	.4809	1.9243	.9175	.8524	20.22
19.99	3.0096	.1938	.5773	2.4613	.8423	.8111	3.0012	.2038	.5809	1.9251	.9141	.8492	20.23
21.99	3.1503	.3447	.6900	2.5779	.9754	.9245	3.1399	.3562	.6942	1.9251	.9166	.8516	20.23
23.99	3.2696	.5068	.8162	2.6767	1.1162	1.0503	3.2598	.5169	.8200	1.9246	.9151	.8502	20.22
RUN = 621													
-3.63	.7636	-1.2229	-.7136	.3670	.0965	-.3331	.7605	-1.2125	-.7106	2.5909	1.5119	1.3777	20.36
-2.04	.9274	-1.2067	-.6438	.4953	.0977	-.2643	.9252	-1.2002	-.6419	2.5842	1.5076	1.3741	20.37
.01	1.1426	-1.1847	-.5568	.6631	.1063	-.1764	1.1390	-1.1751	-.5539	2.5895	1.5113	1.3772	20.36
2.02	1.3841	-1.1634	-.4529	.8554	.1208	-.0694	1.3758	-1.1431	-.4468	2.5941	1.5241	1.3887	20.36
4.01	1.6008	-1.1044	-.3491	1.0336	.1476	.0305	1.5977	-1.0974	-.3470	2.5930	1.5084	1.3745	20.36
6.02	1.8363	-1.0479	-.2571	1.2232	.1883	.1240	1.8306	-1.0363	-.2535	2.5897	1.5142	1.3799	20.36
7.99	2.0832	-.9673	-.1761	1.4283	.2463	.2047	2.0774	-.9566	-.1728	2.5932	1.5134	1.3790	20.36
10.03	2.3625	-.8739	-.0766	1.6647	.3159	.3043	2.3562	-.8632	-.0731	2.5925	1.5137	1.3793	20.36
12.02	2.5945	-.7641	.0138	1.8572	.3985	.3940	2.5892	-.7559	.0165	2.5922	1.5107	1.3766	20.36
13.97	2.8390	-.6433	.1110	2.0613	.4955	.4918	2.8323	-.6334	.1143	2.5891	1.5132	1.3790	20.36
15.99	3.0825	-.4958	.2091	2.2657	.6142	.5896	3.0758	-.4867	.2122	2.5920	1.5124	1.3782	20.36
17.99	3.3065	-.3354	.3034	2.4500	.7470	.6845	3.2982	-.3250	.3070	2.5910	1.5146	1.3802	20.36
19.99	3.5122	-.1623	.4079	2.6186	.8896	.7890	3.5036	-.1521	.4115	2.5912	1.5146	1.3802	20.36
21.97	3.6773	.0115	.5299	2.7495	1.0300	.9094	3.6700	.0195	.5319	2.5918	1.5119	1.3778	20.36
23.99	3.8214	.1977	.6328	2.8583	1.1829	1.0133	3.8138	.2054	.6358	2.5907	1.5119	1.3778	20.36

TABLE 5.- CONTINUED.

VEO-WING 1/10-SCALE RESEARCH MODEL,VSTOL TEST NO. 204

ALPHA	CL	CD	CPM	CLE2	CDE2	CME2	CLCT	CDCT	CMCT	NPR	CT	CTRF	THETAJ
RUN = 622													
-3.62	.9148	-1.6588	-.8654	.3865	.0994	-.3502	.9063	-1.6306	-.8571	3.1603	2.0326	1.8359	20.35
-1.95	1.1506	-1.6441	-.7626	.5724	.0952	-.2485	1.1422	-1.6190	-.7552	3.1570	2.0293	1.8329	20.34
.03	1.3425	-1.6094	-.6880	.7057	.1063	-.1747	1.3343	-1.5873	-.6814	3.1556	2.0262	1.8301	20.34
1.98	1.5850	-1.5794	-.5871	.8876	.1200	-.0719	1.5734	-1.5513	-.5786	3.1545	2.0336	1.8369	20.34
4.01	1.8056	-1.5109	-.4939	1.0544	.1498	.0172	1.7990	-1.4961	-.4893	3.1532	2.0179	1.8227	20.33
6.00	2.0719	-1.4521	-.4033	1.2584	.1923	.1109	2.0595	-1.4269	-.3955	3.1507	2.0311	1.8346	20.33
8.01	2.3257	-1.3554	-.3136	1.4594	.2502	.1981	2.3172	-1.3396	-.3085	3.1553	2.0199	1.8244	20.34
9.96	2.5973	-1.2542	-.2155	1.6786	.3185	.2951	2.5898	-1.2413	-.2113	3.1515	2.0165	1.8214	20.33
11.99	2.8655	-1.1342	-.1205	1.8922	.4038	.3899	2.8582	-1.1227	-.1167	3.1534	2.0151	1.8201	20.33
14.02	3.1232	-.9998	-.0268	2.0954	.5039	.4840	3.1147	-.9874	-.0226	3.1550	2.0166	1.8215	20.34
16.00	3.3959	-.8417	.0722	2.3176	.6246	.5825	3.3878	-.8307	.0760	3.1529	2.0150	1.8201	20.33
18.00	3.6349	-.6635	.1952	2.5535	.7675	.7067	3.6739	-.6496	.2002	3.1523	2.0196	1.8243	20.33
20.00	3.8541	-.4942	.2704	2.6716	.8984	.7825	3.8409	-.4787	.2761	3.1523	2.0226	1.8269	20.33
21.98	4.0310	-.3164	.3820	2.7982	1.0377	.8954	4.0143	-.2981	.3890	3.1520	2.0274	1.8312	20.33
23.99	4.1907	-.1115	.4899	2.9164	1.1933	1.0011	4.1786	-.0991	.4947	3.1509	2.0191	1.8238	20.33
RUN = 623													
8.00	1.0453	.1682	.3083	1.0453	.1682	.3083	1.0453	.1682	.3083	1.0000	0.0000	0.0000	0.00
8.00	1.1155	.1039	.2862	1.0668	.1779	.3130	1.1111	.1105	.2886	1.0459	.1099	.0886	25.32
7.99	1.2219	.0039	.2098	1.1334	.1692	.2591	1.2179	.0112	.2120	1.1536	.2093	.1875	20.15
8.00	1.3711	-.1561	.1458	1.2006	.1875	.2465	1.3665	-.1470	.1485	1.3682	.4110	.3836	18.39
7.99	1.6758	-.4343	.0440	1.3258	.2350	.2495	1.6714	-.4258	.0466	1.8082	.8103	.7553	19.62
8.00	1.9214	-.7238	-.0721	1.3861	.2481	.2362	1.9184	-.7184	-.0704	2.2572	1.2067	1.1096	20.84
8.00	2.1205	-1.0463	-.2025	1.4190	.2591	.2059	2.1072	-1.0214	-.1948	2.7266	1.6310	1.4819	20.25
8.01	3.0123	-2.3029	-.6739	1.5200	.2640	.2457	3.0186	-2.3137	-.6777	3.6302	3.2862	2.9692	22.17
7.98	3.8196	-3.5555	-1.1435	1.6037	.2765	.2193	3.8195	-3.5555	-1.1434	3.6002	4.9001	4.4265	22.05
RUN = 624													
-3.79	-.2033	.0527	-.1923	-.2033	.0527	-.1923	-.2033	.0527	-.1923	1.0050	0.0000	0.0000	0.00
-2.04	-.0291	.0359	-.0957	-.0291	.0359	-.0957	-.0291	.0359	-.0957	1.0047	0.0000	0.0000	0.00
-.00	.1082	.0311	-.0182	.1082	.0311	-.0182	.1082	.0311	-.0182	1.0052	0.0000	0.0000	0.00
1.97	.2725	.0339	.0749	.2725	.0339	.0749	.2725	.0339	.0749	1.0045	0.0000	0.0000	0.00
4.01	.4577	.0466	.1877	.4577	.0466	.1877	.4577	.0466	.1877	1.0042	0.0000	0.0000	0.00
5.99	.6316	.0684	.2953	.6316	.0684	.2953	.6316	.0684	.2953	1.0041	0.0000	0.0000	0.00
7.99	.7710	.0991	.3790	.7710	.0991	.3790	.7710	.0991	.3790	1.0046	0.0000	0.0000	0.00
10.05	.9578	.1622	.4804	.9578	.1622	.4804	.9578	.1622	.4804	1.0041	0.0000	0.0000	0.00
12.01	1.1513	.2206	.5833	1.1513	.2206	.5833	1.1513	.2206	.5833	1.0038	0.0000	0.0000	0.00
14.00	1.3062	.2891	.6745	1.3062	.2891	.6745	1.3062	.2891	.6745	1.0031	0.0000	0.0000	0.00
15.99	1.4479	.3682	.7695	1.4479	.3682	.7695	1.4479	.3682	.7695	1.0034	0.0000	0.0000	0.00
17.99	1.5804	.4576	.8552	1.5804	.4576	.8552	1.5804	.4576	.8552	1.0033	0.0000	0.0000	0.00
19.99	1.6827	.5472	.9564	1.6827	.5472	.9564	1.6827	.5472	.9564	1.0022	0.0000	0.0000	0.00
22.00	1.8274	.6582	1.0979	1.8274	.6582	1.0979	1.8274	.6582	1.0979	1.0010	0.0000	0.0000	0.00
24.00	1.8897	.7571	1.1635	1.8897	.7571	1.1635	1.8897	.7571	1.1635	1.0000	0.0000	0.0000	0.00

TABLE 5.- CONTINUED.

VEO-WING 1/10-SCALE RESEARCH MODEL, VSTOL TEST NO. 204

ALPHA	CL	CD	CPM	CLE2	CDE2	CME2	CLCT	CDCT	CMCT	NPR	CT	CTRF	THETAJ
RUN = 625													
-3.78	-.2214	.0534	-.2088	-.2214	.0534	-.2088	-.2214	.0534	-.2088	1.0051	0.0000	0.0000	0.00
-2.06	-.0411	.0345	-.1079	-.0411	.0345	-.1079	-.0411	.0345	-.1079	1.0045	0.0000	0.0000	0.00
-.02	.1192	.0277	-.0243	.1192	.0277	-.0243	.1192	.0277	-.0243	1.0048	0.0000	0.0000	0.00
2.05	.2966	.0295	.0874	.2966	.0295	.0874	.2966	.0295	.0874	1.0041	0.0000	0.0000	0.00
4.02	.4516	.0432	.1816	.4516	.0432	.1816	.4516	.0432	.1816	1.0036	0.0000	0.0000	0.00
6.02	.6114	.0665	.2768	.6114	.0665	.2768	.6114	.0665	.2768	1.0033	0.0000	0.0000	0.00
7.96	.7861	.0967	.3875	.7861	.0967	.3875	.7861	.0967	.3875	1.0032	0.0000	0.0000	0.00
9.98	.9607	.1439	.4738	.9607	.1439	.4738	.9607	.1439	.4738	1.0026	0.0000	0.0000	0.00
12.00	1.1528	.2060	.5776	1.1528	.2060	.5776	1.1528	.2060	.5776	1.0021	0.0000	0.0000	0.00
13.99	1.3136	.2723	.6754	1.3138	.2723	.6754	1.3138	.2723	.6754	1.0012	0.0000	0.0000	0.00
16.03	1.4510	.3535	.7644	1.4510	.3535	.7644	1.4510	.3535	.7644	1.0016	0.0000	0.0000	0.00
18.01	1.5826	.4427	.8526	1.5826	.4427	.8526	1.5826	.4427	.8526	1.0005	0.0000	0.0000	0.00
19.99	1.6900	.5322	.9553	1.6900	.5322	.9553	1.6900	.5322	.9553	1.0001	0.0000	0.0000	0.00
21.98	1.7846	.6273	1.0529	1.7846	.6273	1.0529	1.7846	.6273	1.0529	1.0000	0.0000	0.0000	0.00
23.99	1.8958	.7413	1.1596	1.8958	.7413	1.1596	1.8958	.7413	1.1596	1.0000	0.0000	0.0000	0.00
RUN = 627													
-3.76	.0627	-.4150	-.3236	-.0312	.0615	-.1990	.0594	-.3981	-.3192	1.4868	.5184	.4856	14.91
-2.03	.1939	-.4154	-.2622	.0864	.0546	-.1384	.1908	-.4020	-.2587	1.4806	.5147	.4821	14.91
.01	.4046	-.4139	-.1565	.2808	.0504	-.0331	.4015	-.4023	-.1534	1.4800	.5129	.4805	14.91
2.01	.5629	-.3996	-.0781	.4231	.0599	.0452	.5595	-.3884	-.0750	1.4799	.5125	.4802	14.91
4.00	.7824	-.3762	.0372	.6269	.0777	.1605	.7787	-.3654	.0402	1.4808	.5122	.4799	14.91
5.99	.9741	-.3453	.1365	.8027	.1037	.2599	.9698	-.3340	.1396	1.4811	.5130	.4807	14.91
8.04	1.1704	-.2967	.2413	.9837	.1442	.3642	1.1664	-.2872	.2439	1.4804	.5110	.4788	14.91
9.98	1.3530	-.2357	.3270	1.1497	.2026	.4511	1.3469	-.2224	.3308	1.4806	.5156	.4831	14.91
12.00	1.5558	-.1580	.4286	1.3379	.2713	.5522	1.5500	-.1465	.4319	1.4796	.5137	.4814	14.91
13.99	1.7778	-.0659	.5307	1.5454	.3550	.6541	1.7718	-.0552	.5338	1.4802	.5131	.4808	14.91
15.99	1.9645	.0355	.6031	1.7174	.4482	.7266	1.9581	.0462	.6063	1.4794	.5133	.4810	14.91
18.00	2.1348	.1488	.6751	1.8735	.5525	.7985	2.1281	.1591	.6782	1.4802	.5131	.4808	14.91
19.99	2.3087	.2747	.7826	2.0330	.6699	.9063	2.3011	.2856	.7860	1.4794	.5142	.4818	14.91
22.03	2.4381	.4072	.8962	2.1500	.7902	1.0193	2.4316	.4157	.8990	1.4793	.5114	.4793	14.91
23.98	2.5603	.5385	.9951	2.2588	.9122	1.1183	2.5530	.5475	.9980	1.4791	.5124	.4802	14.91

TABLE 5.- CONTINUED.

VEO-WING 1/10-SCALE RESEARCH MODEL,VSTOL TEST NO. 204

ALPHA	CL	CD	CPM	CLE2	CDE2	CME2	CLCT	CDCT	CMCT	NPR	CT	CTRF	THETAJ
RUN = 628													
-3.72	.2142	-.7219	-.4395	.0040	.0881	-.2136	.2127	-.7163	-.4379	1.9175	.9062	.8367	18.27
-2.01	.4063	-.7367	-.3598	.1675	.0772	-.1304	.4014	-.7198	-.3550	1.9320	.9191	.8482	18.37
.01	.6280	-.7296	-.2610	.3608	.0758	-.0316	.6223	-.7125	-.2562	1.9288	.9195	.8486	18.35
2.00	.8221	-.7128	-.1728	.5262	.0846	.0572	.8151	-.6941	-.1674	1.9307	.9216	.8505	18.36
4.01	1.0407	-.6765	-.0698	.7185	.1065	.1591	1.0345	-.6615	-.0655	1.9306	.9176	.8468	18.36
6.00	1.2556	-.6369	.0340	.9060	.1352	.2631	1.2486	-.6214	.0386	1.9305	.9184	.8476	18.36
7.96	1.4492	-.5794	.1169	1.0744	.1784	.3455	1.4427	-.5662	.1209	1.9292	.9160	.8454	18.35
9.99	1.6848	-.5076	.2183	1.2818	.2387	.4478	1.6764	-.4920	.2231	1.9337	.9191	.8481	18.38
12.00	1.9138	-.4205	.3066	1.4840	.3134	.5366	1.9037	-.4033	.3120	1.9303	.9217	.8506	18.35
14.01	2.1054	-.3242	.3807	1.6507	.3933	.6104	2.0953	-.3083	.3858	1.9309	.9204	.8494	18.36
16.00	2.3735	-.1969	.4818	1.8945	.5038	.7113	2.3632	-.1818	.4868	1.9305	.9197	.8488	18.36
18.02	2.5863	-.0631	.5678	2.0819	.6215	.7978	2.5745	-.0472	.5732	1.9313	.9214	.8504	18.36
20.01	2.7700	.0824	.6631	2.2442	.7467	.8972	2.7597	.0954	.6726	1.9304	.9179	.8471	18.36
21.99	2.9394	.2340	.7735	2.3889	.8821	1.0035	2.9266	.2490	.7789	1.9302	.9214	.8504	18.36
23.99	3.0872	.3941	.8739	2.5137	1.0234	1.1041	3.0732	.4095	.8795	1.9304	.9226	.8515	18.36
RUN = 629													
-3.69	.4131	-1.2457	-.5800	.0580	.0774	-.2108	.4097	-1.2331	-.5765	2.5937	1.5143	1.3699	18.71
-1.99	.6008	-1.2459	-.5068	.2056	.0697	-.1367	.5960	-1.2297	-.5023	2.5958	1.5187	1.3737	18.71
-.01	.8377	-1.2316	-.4128	.3972	.0700	-.0425	.8322	-1.2152	-.4081	2.5955	1.5192	1.3741	18.71
2.00	1.0631	-1.2095	-.3244	.5749	.0814	.0475	1.0549	-1.1877	-.3182	2.5956	1.5257	1.3801	18.71
4.02	1.2858	-1.1656	-.2181	.7552	.1006	.1519	1.2796	-1.1509	-.2138	2.5926	1.5177	1.3729	18.71
6.03	1.5159	-1.1101	-.1102	.9439	.1310	.2581	1.5119	-1.1013	-.1076	2.5934	1.5107	1.3665	18.71
7.99	1.7641	-1.0444	-.0205	1.1480	.1804	.3490	1.7577	-1.0318	-.0167	2.5957	1.5156	1.3710	18.71
10.01	1.9855	-.9524	.0550	1.3307	.2423	.4222	1.9829	-.9477	.0565	2.5917	1.5060	1.3624	18.72
12.01	2.2603	-.8570	.1530	1.5612	.3194	.5218	2.2544	-.8471	.1561	2.5929	1.5127	1.3684	18.71
13.99	2.4895	-.7477	.2323	1.7480	.4071	.6022	2.4811	-.7347	.2365	2.5903	1.5171	1.3724	18.72
15.99	2.7780	-.6046	.3336	1.9975	.5224	.7030	2.7700	-.5931	.3373	2.5915	1.5154	1.3708	18.72
18.00	3.0265	-.4479	.4177	2.2056	.6527	.7877	3.0170	-.4350	.4220	2.5900	1.5177	1.3731	18.72
20.01	3.2323	-.2757	.5073	2.3795	.7880	.8747	3.2283	-.2707	.5090	2.5907	1.5072	1.3634	18.72
22.02	3.4294	-.1026	.6034	2.5381	.9324	.9715	3.4236	-.0959	.6058	2.5906	1.5098	1.3659	18.72
23.98	3.6303	.0850	.7065	2.7024	1.0907	1.0753	3.6226	.0934	.7096	2.5904	1.5126	1.3684	18.72

TABLE 5.- CONTINUED.

VEO-WING 1/10-SCALE RESEARCH MODEL,VSTOL TEST NO. 204

ALPHA	CL	CD	CPM	CLE2	CDE2	CME2	CLCT	CDCT	CMCT	NPR	CT	CTRF	THETAJ
RUN = 630													
-3.68	.5550	-1.6823	-.7215	.0739	.0871	-.2166	.5477	-1.6553	-.7138	3.1618	2.0310	1.8335	18.89
-2.00	.7730	-1.6776	-.6327	.2397	.0790	-.1273	.7643	-1.6487	-.6244	3.1595	2.0335	1.8358	18.89
.03	.9967	-1.6582	-.5572	.4001	.0815	-.0509	.9858	-1.6264	-.5480	3.1597	2.0372	1.8391	18.89
2.00	1.2371	-1.6149	-.4533	.5870	.0890	.0486	1.2306	-1.5978	-.4482	3.1557	2.0203	1.8237	18.89
4.00	1.4703	-1.5693	-.3527	.7607	.1113	.1493	1.4629	-1.5519	-.3475	3.1558	2.0209	1.8243	18.89
6.01	1.7185	-1.5187	-.2494	.9476	.1422	.2548	1.7077	-1.4955	-.2423	3.1611	2.0282	1.8310	18.89
7.98	1.9663	-1.4499	-.1615	1.1358	.1889	.3445	1.9520	-1.4217	-.1527	3.1641	2.0350	1.8372	18.89
9.99	2.2446	-1.3529	-.0681	1.3599	.2509	.4361	2.2319	-1.3300	-.0609	3.1595	2.0290	1.8317	18.89
12.00	2.5003	-1.2469	.0184	1.5587	.3269	.5233	2.4857	-1.2225	.0262	3.1606	2.0316	1.8340	18.89
14.00	2.7565	-1.1248	.1039	1.7591	.4173	.6097	2.7397	-1.0988	.1125	3.1626	2.0343	1.8365	18.89
16.01	3.0437	-.9652	.1940	1.9991	.5323	.6966	3.0320	-.9485	.1996	3.1588	2.0226	1.8258	18.89
18.00	3.3078	-.8029	.2760	2.2093	.6605	.7798	3.2933	-.7335	.2827	3.1606	2.0269	1.8298	18.89
19.99	3.5454	-.6285	.3677	2.3949	.7980	.8725	3.5285	-.6075	.3752	3.1661	2.0300	1.8326	18.90
22.00	3.7711	-.4456	.4740	2.5677	.9440	.9803	3.7497	-.4209	.4831	3.1637	2.0363	1.8333	18.89
24.00	3.9683	-.2345	.5749	2.7240	1.1048	1.0734	3.9529	-.2180	.5811	3.1648	2.0250	1.8281	18.89
RUN = 631													
7.98	.7738	.1030	.3786	.7738	.1030	.3786	.7738	.1030	.3786	1.0031	0.0000	0.0000	0.00
8.01	.8953	.0443	.3580	.8437	.1401	.3380	.8843	.0646	.3644	1.0653	.1269	.1083	20.27
8.00	1.0708	-.2105	.2381	.9181	.1421	.3376	1.0670	-.2018	.2406	1.3641	.4102	.3843	15.41
8.01	1.4083	-.5012	.1655	1.0803	.1837	.3680	1.4006	-.4850	.1703	1.8220	.3193	.7593	17.57
7.99	1.5947	-.7849	.0450	1.0984	.1903	.3425	1.5949	-.7853	.0449	2.2498	1.1994	1.0942	18.98
7.99	1.7736	-1.1134	-.0580	1.1182	.1913	.3352	1.7668	-1.0999	-.0539	2.7056	1.6167	1.4600	18.69
7.99	1.9724	-1.4500	-.1735	1.1310	.2078	.3396	1.9485	-1.4029	-.1590	3.1938	2.0594	1.8591	18.91
7.99	2.5584	-2.3976	-.5017	1.1847	.2771	.3555	2.5604	-2.4014	-.5029	3.6314	3.2952	3.0063	19.19
7.99	3.3049	-3.6421	-.9394	1.2653	.3331	.3315	3.3045	-3.6413	-.9391	3.5985	4.9010	4.4679	19.17
RUN = 632													
-3.76	-.0346	.0503	-.2383	-.0346	.0503	-.2383	-.0346	.0503	-.2383	1.0041	0.0000	0.0000	0.00
-2.00	.1075	.0399	-.1510	.1075	.0399	-.1510	.1075	.0399	-.1510	1.0039	0.0000	0.0000	0.00
.01	.2590	.0396	-.0640	.2590	.0396	-.0640	.2590	.0396	-.0640	1.0032	0.0000	0.0000	0.00
2.00	.4156	.0442	.0294	.4156	.0442	.0294	.4156	.0442	.0294	1.0032	0.0000	0.0000	0.00
4.02	.5897	.0611	.1372	.5897	.0611	.1372	.5897	.0611	.1372	1.0025	0.0000	0.0000	0.00
4.01	.6068	.0658	.1435	.6068	.0658	.1435	.6068	.0658	.1435	1.0026	0.0000	0.0000	0.00
6.00	.7608	.0897	.2452	.7608	.0897	.2452	.7608	.0897	.2452	1.0024	0.0000	0.0000	0.00
7.99	.9097	.1230	.3369	.9097	.1230	.3369	.9097	.1230	.3369	1.0021	0.0000	0.0000	0.00
10.03	1.1041	.1811	.4526	1.1041	.1811	.4526	1.1041	.1811	.4526	1.0019	0.0000	0.0000	0.00
12.01	1.2643	.2438	.5484	1.2643	.2438	.5484	1.2643	.2438	.5484	1.0012	0.0000	0.0000	0.00
14.01	1.4282	.3163	.6569	1.4282	.3163	.6569	1.4282	.3163	.6569	1.0010	0.0000	0.0000	0.00
16.00	1.5610	.4011	.7401	1.5610	.4011	.7401	1.5610	.4011	.7401	1.0005	0.0000	0.0000	0.00
17.99	1.6823	.4898	.8350	1.6823	.4898	.8350	1.6823	.4898	.8350	1.0000	0.0000	0.0000	0.00
19.98	1.7777	.5801	.9331	1.7777	.5801	.9331	1.7777	.5801	.9331	1.0000	0.0000	0.0000	0.00
21.97	1.8852	.6840	1.0530	1.8852	.6840	1.0530	1.8852	.6840	1.0530	1.0000	0.0000	0.0000	0.00
23.99	1.9723	.7942	1.1510	1.9723	.7942	1.1510	1.9723	.7942	1.1510	1.0000	0.0000	0.0000	0.00

TABLE 5.- CONTINUED.

VEO-WING 1/10-SCALE RESEARCH MODEL, VSTOL TEST NO. 204

ALPHA	CL	CD	CPM	CLE2	CDE2	CME2	CLCT	CDCT	CMCT	NPR	CT	CTRF	THETAJ
RUN = 634													
-3.80	-.0731	.0421	-.2457	-.0943	.1065	-.2258	-.0690	.0298	-.2495	1.0116	.0840	.0678	22.01
-3.76	.2161	-.4098	-.3784	.1115	.0563	-.2559	.2140	-.4007	-.3760	1.4764	.5099	.4797	16.35
-2.09	.3575	-.4115	-.3092	.2397	.0517	-.1871	.3557	-.4042	-.3073	1.4732	.5081	.4780	16.37
-.02	.5707	-.4076	-.2052	.4361	.0512	-.0831	.5685	-.4002	-.2033	1.4732	.5082	.4781	16.37
1.99	.7300	-.3876	-.1214	.5809	.0619	-.0005	.7290	-.3846	-.1206	1.4724	.5035	.4737	16.37
4.01	.9370	-.3627	-.0174	.7704	.0858	.1048	.9342	-.3552	-.0154	1.4748	.5085	.4784	16.36
6.05	1.1373	-.3252	.0897	.9550	.1170	.2109	1.1343	-.3179	.0908	1.4749	.5084	.4783	16.36
8.12	1.3185	-.2722	.1728	1.1210	.1616	.2945	1.3159	-.2666	.1744	1.4740	.5066	.4766	16.36
10.08	1.5063	-.2116	.2687	1.2934	.2165	.3908	1.5028	-.2047	.2707	1.4756	.5082	.4782	16.36
12.07	1.7248	-.1270	.3772	1.4974	.2930	.4991	1.7213	-.1207	.3790	1.4752	.5077	.4776	16.36
14.13	1.9480	-.0275	.4767	1.7048	.3856	.5991	1.9435	-.0198	.4790	1.4761	.5095	.4793	16.35
16.05	2.1372	.0800	.5542	1.8805	.4845	.6766	2.1326	.0873	.5564	1.4751	.5092	.4791	16.36
18.00	2.3162	.1986	.6428	2.0452	.5950	.7654	2.3107	.2066	.6453	1.4761	.5103	.4801	16.35
19.97	2.4566	.3219	.7399	2.1728	.7080	.8622	2.4514	.3290	.7421	1.4752	.5092	.4791	16.36
22.06	2.5604	.4506	.8403	2.2622	.8265	.9629	2.5546	.4579	.8427	1.4754	.5100	.4799	16.35
23.99	2.6840	.5875	.9588	2.3730	.9535	1.0815	2.6776	.5950	.9613	1.4748	.5105	.4802	16.36
RUN = 635													
-3.71	.4026	-.7488	-.5017	.1745	.0692	-.2716	.3993	-.7372	-.4984	1.9223	.9129	.8492	19.29
-1.96	.6169	-.7530	-.4051	.3630	.0608	-.1742	.6123	-.7384	-.4010	1.9231	.9165	.8525	19.29
.04	.7670	-.7348	-.3453	.4850	.0692	-.1145	.7621	-.7208	-.3413	1.9227	.9159	.8520	19.29
2.01	.9836	-.7114	-.2433	.6748	.0806	-.0129	.9789	-.6994	-.2397	1.9224	.9139	.8502	19.29
4.07	1.2043	-.6749	-.1405	.8675	.1050	.0897	1.1994	-.6636	-.1371	1.9220	.9132	.8495	19.29
6.04	1.3839	-.6256	-.0555	1.0221	.1388	.1736	1.3803	-.6179	-.0532	1.9229	.9092	.8457	19.29
8.03	1.6501	-.5590	.0535	1.2621	.1921	.2825	1.6463	-.5517	.0557	1.9226	.9088	.8454	19.29
10.06	1.9101	-.4752	.1627	1.4971	.2594	.3910	1.9074	-.4704	.1642	1.9219	.9060	.8427	19.28
12.03	2.0936	-.3889	.2369	1.6538	.3340	.4661	2.0889	-.3813	.2393	1.9220	.9096	.8461	19.29
13.98	2.3004	-.2833	.3187	1.8355	.4253	.5483	2.2948	-.2747	.3215	1.9226	.9111	.8475	19.29
16.04	2.5426	-.1563	.4146	2.0507	.5378	.6451	2.5348	-.1452	.4183	1.9230	.9146	.8507	19.29
18.01	2.7387	-.0217	.5044	2.2230	.6554	.7349	2.7303	-.0107	.5081	1.9208	.9149	.8512	19.28
20.02	2.9258	.1281	.6088	2.3863	.7869	.8395	2.9167	.1392	.6127	1.9237	.9154	.8515	19.30
22.06	3.0711	.2814	.7122	2.5080	.9214	.9432	3.0610	.2929	.7164	1.9229	.9164	.8525	19.29
24.00	3.2082	.4440	.8329	2.6254	1.0627	1.0632	3.1994	.4534	.8363	1.9229	.9138	.8500	19.29

TABLE 5.- CONTINUED.

VEO-WING 1/10-SCALE RESEARCH MODEL, VSTOL TEST NO. 204

ALPHA	CL	CD	CPM	CLE2	CDE2	CME2	CLCT	CDCT	CMCT	NPR	CT	CTRF	THETAJ
RUN = 636													
-3.68	.6063	-1.2531	-.6622	.2291	.0730	-.2864	.6031	-1.2419	-.6590	2.5959	1.5128	1.3787	19.55
-1.96	.8100	-1.2521	-.5766	.3917	.0675	-.1992	.8048	-1.2357	-.5719	2.5957	1.5189	1.3843	19.55
.03	1.0307	-1.2375	-.4878	.5649	.0722	-.1088	1.0230	-1.2157	-.4815	2.5966	1.5254	1.3901	19.55
2.04	1.2267	-1.2013	-.4027	.7169	.0869	-.0250	1.2200	-1.1842	-.3976	2.5963	1.5202	1.3853	19.55
4.04	1.4662	-1.1529	-.2968	.9147	.1097	.0788	1.4618	-1.1430	-.2939	2.5962	1.5119	1.3778	19.55
6.11	1.7206	-1.0968	-.1928	1.1230	.1469	.1833	1.7150	-1.0851	-.1893	2.5997	1.5142	1.3798	19.55
8.05	1.9525	-1.0268	-.1171	1.3114	.1995	.2601	1.9447	-1.0119	-.1125	2.5997	1.5185	1.3837	19.55
10.04	2.2121	-.9365	-.0359	1.5283	.2674	.3415	2.2034	-.9211	-.0311	2.6004	1.5195	1.3846	19.55
12.05	2.4819	-.8265	.0613	1.7571	.3514	.4383	2.4734	-.8128	.0657	2.5986	1.5176	1.3830	19.55
14.09	2.7701	-.6964	.1618	2.0030	.4563	.5392	2.7603	-.6816	.1666	2.6002	1.5194	1.3846	19.55
15.96	2.9775	-.5699	.2407	2.1722	.5584	.6185	2.9663	-.5543	.2459	2.5980	1.5211	1.3862	19.55
17.98	3.1702	-.4193	.3160	2.3271	.6780	.6932	3.1599	-.4060	.3206	2.5977	1.5185	1.3837	19.55
20.05	3.4207	-.2337	.4399	2.5396	.8315	.8167	3.4109	-.2218	.4441	2.5981	1.5169	1.3823	19.55
21.97	3.5663	-.0738	.5231	2.6480	.9633	.9007	3.5542	-.0601	.5281	2.5992	1.5200	1.3852	19.55
23.97	3.7640	.1216	.6614	2.8107	1.1253	1.0387	3.7521	.1341	.6661	2.5969	1.5190	1.3843	19.55
RUN = 637													
-3.63	.7720	-1.6967	-.8078	.2642	.0733	-.2944	.7623	-1.6629	-.7980	3.1736	2.0389	1.8413	19.64
-1.98	.9809	-1.6827	-.7260	.4232	.0696	-.2136	.9709	-1.6515	-.7168	3.1680	2.0363	1.8389	19.63
.03	1.1891	-1.6568	-.6531	.5703	.0755	-.1408	1.1779	-1.6254	-.6438	3.1643	2.0369	1.8395	19.62
2.00	1.4405	-1.6203	-.5494	.7636	.0875	-.0378	1.4291	-1.5916	-.5408	3.1643	2.0342	1.8371	19.62
4.15	1.6888	-1.5596	-.4416	.9516	.1143	.0676	1.6797	-1.5388	-.4353	3.1615	2.0252	1.8290	19.62
6.16	1.9449	-1.5011	-.3458	1.1470	.1518	.1650	1.9323	-1.4750	-.3378	3.1596	2.0321	1.8354	19.61
8.02	2.2268	-1.4211	-.2569	1.3763	.2035	.2535	2.2141	-1.3968	-.2492	3.1597	2.0304	1.8338	19.61
9.94	2.4837	-1.3208	-.1693	1.5827	.2692	.3391	2.4732	-1.3023	-.1634	3.1565	2.0235	1.8276	19.60
12.01	2.7526	-1.2006	-.0813	1.7948	.3553	.4270	2.7418	-1.1829	-.0756	3.1569	2.0230	1.8271	19.61
13.99	3.0056	-1.0692	-.0042	1.9945	.4526	.5042	2.9941	-1.0520	.0016	3.1571	2.0228	1.8271	19.61
16.00	3.2831	-.9174	.0986	2.2170	.5712	.6081	3.2687	-.8974	.1055	3.1574	2.0273	1.8310	19.61
18.06	3.5029	-.7509	.1909	2.3844	.6979	.7002	3.4882	-.7319	.1976	3.1574	2.0265	1.8303	19.61
19.97	3.7352	-.5753	.2962	2.5689	.8356	.8054	3.7198	-.5567	.3029	3.1568	2.0267	1.8305	19.61
22.02	3.9349	-.3918	.4057	2.7143	.9817	.9170	3.9143	-.3686	.4143	3.1588	2.0344	1.8374	19.61
24.05	4.1107	-.1882	.5290	2.8476	1.1358	1.0381	4.0945	-.1712	.5355	3.1569	2.0260	1.8299	19.61
RUN = 638													
7.97	.9025	.1447	.3058	.9025	.1447	.3058	.9025	.1447	.3058	1.0000	0.0000	0.0000	0.00
7.97	.9700	.0636	.2850	.9254	.1433	.3114	.9666	.0697	.2870	1.0432	.1083	.0914	21.30
8.00	1.1447	-.0367	.2505	1.0594	.1364	.3015	1.1402	-.0276	.2532	1.1536	.2111	.1929	18.23
8.01	1.2760	-.2003	.1761	1.1113	.1552	.2770	1.2694	-.1861	.1802	1.3738	.4166	.3917	16.85
8.05	1.5862	-.4749	.0717	1.2463	.2028	.2745	1.5811	-.4649	.0747	1.8134	.8120	.7582	18.58
8.08	1.8389	-.7703	-.0393	1.3172	.2168	.2663	1.8329	-.7590	-.0358	2.2641	1.2138	1.1164	19.77
8.10	2.0687	-1.0842	-.1271	1.3857	.2201	.2749	2.0604	-1.0684	-.1222	2.7096	1.6195	1.4723	19.54
8.01	2.1959	-1.3920	-.2551	1.3536	.2193	.2503	2.1905	-1.3816	-.2518	3.1498	2.0129	1.8182	19.59
7.97	2.8324	-2.2872	-.6243	1.4204	.2364	.2483	2.8311	-2.2847	-.6234	3.5601	3.2031	2.8918	21.26
7.97	3.5948	-3.5379	-1.0909	1.4801	.2544	.2137	3.5905	-3.5302	-1.0882	3.5364	4.8098	4.3421	21.17

TABLE 5.- CONTINUED.

VEO-WING 1/10-SCALE RESEARCH MODEL, VSTOL TEST NO. 204

ALPHA	CL	CD	CPM	CLE2	CDE2	CME2	CLCT	CDCT	CMCT	NPR	CT	CTRF	THETAJ
RUN = 641													
-3.80	.1256	.0574	-.2811	.1256	.0574	-.2811	.1256	.0574	-.2811	1.0023	0.0000	0.0000	0.00
-1.99	.3142	.0464	-.1687	.3142	.0464	-.1687	.3142	.0464	-.1687	1.0020	0.0000	0.0000	0.00
-.00	.4859	.0479	-.0711	.4859	.0479	-.0711	.4859	.0479	-.0711	1.0017	0.0000	0.0000	0.00
2.02	.6540	.0587	.0373	.6540	.0587	.0373	.6540	.0587	.0373	1.0016	0.0000	0.0000	0.00
3.99	.7927	.0836	.1228	.7927	.0836	.1228	.7927	.0836	.1228	1.0015	0.0000	0.0000	0.00
6.00	.9743	.1129	.2420	.9743	.1129	.2420	.9743	.1129	.2420	1.0015	0.0000	0.0000	0.00
7.99	1.1079	.1552	.3169	1.1079	.1552	.3169	1.1079	.1552	.3169	1.0018	0.0000	0.0000	0.00
9.96	1.2718	.2098	.4185	1.2718	.2098	.4185	1.2718	.2098	.4185	1.0015	0.0000	0.0000	0.00
12.00	1.4503	.2853	.5327	1.4503	.2853	.5327	1.4503	.2853	.5327	1.0013	0.0000	0.0000	0.00
14.00	1.5875	.3583	.6296	1.5875	.3583	.6296	1.5875	.3583	.6296	1.0018	0.0000	0.0000	0.00
16.00	1.7346	.4505	.7324	1.7346	.4505	.7324	1.7346	.4505	.7324	1.0016	0.0000	0.0000	0.00
17.99	1.8161	.5332	.8180	1.8161	.5332	.8180	1.8161	.5332	.8180	1.0020	0.0000	0.0000	0.00
19.99	1.9296	.6310	.9318	1.9296	.6310	.9318	1.9296	.6310	.9318	1.0018	0.0000	0.0000	0.00
21.99	2.0135	.7325	1.0324	2.0135	.7325	1.0324	2.0135	.7325	1.0324	1.0012	0.0000	0.0000	0.00
24.00	2.1136	.8503	1.1430	2.1136	.8503	1.1430	2.1136	.8503	1.1430	1.0000	0.0000	0.0000	0.00
RUN = 643													
-3.73	.3956	-.4276	-.3836	.2577	.0543	-.2617	.3946	-.4243	-.3827	1.4100	.5034	.5012	19.70
-1.98	.5525	-.4240	-.3128	.4001	.0532	-.1910	.5516	-.4210	-.3120	1.4094	.5032	.5010	19.69
-.00	.7172	-.4104	-.2321	.5490	.0596	-.1107	.7167	-.4091	-.2317	1.4089	.5014	.4992	19.69
2.00	.8953	-.3916	-.1389	.7110	.0719	-.0177	.8950	-.3907	-.1387	1.4082	.5009	.4987	19.69
4.00	1.0831	-.3587	-.0318	.8831	.0971	.0891	1.0831	-.3588	-.0319	1.4077	.4999	.4977	19.69
6.01	1.2836	-.3199	.0772	1.0653	.1334	.1995	1.2813	-.3152	.0785	1.4126	.5053	.5031	19.70
8.00	1.4370	-.2635	.1571	1.2042	.1799	.2789	1.4356	-.2608	.1579	1.4121	.5030	.5008	19.70
10.01	1.6500	-.1868	.2696	1.4012	.2471	.3916	1.6480	-.1852	.2706	1.4124	.5041	.5019	19.70
11.99	1.8303	-.1083	.3771	1.5661	.3197	.4994	1.8276	-.1039	.3783	1.4128	.5052	.5030	19.70
14.01	2.0350	-.0079	.4984	1.7549	.4118	.6211	2.0313	-.0023	.5000	1.4128	.5068	.5046	19.70
16.00	2.1778	.0969	.5854	1.8835	.5064	.7080	2.1740	.1022	.5869	1.4131	.5065	.5043	19.70
17.99	2.3268	.2092	.6814	2.0178	.6091	.8043	2.3222	.2152	.6833	1.4134	.5076	.5054	19.71
20.00	2.4793	.3405	.7940	2.1579	.7275	.9162	2.4760	.3445	.7952	1.4132	.5052	.5030	19.71
22.00	2.6017	.4662	.9029	2.2664	.8426	1.0255	2.5975	.4709	.9045	1.4130	.5063	.5041	19.70
23.99	2.7055	.6033	1.0066	2.3576	.9674	1.1290	2.7015	.6075	1.0080	1.4126	.5058	.5036	19.70

TABLE 5.- CONTINUED.

VEO-WING 1/10-SCALE RESEARCH MODEL,VSTOL TEST NO. 204

ALPHA	CL	CD	CPM	CLE2	CDE2	CME2	CLCT	CDCT	CMCT	NPR	CT	CTRF	THETAJ
RUN = 644													
-3.68	.5172	-.7698	-.5227	.2432	.0960	-.2839	.5138	-.7593	-.5197	1.8388	.9111	.9081	21.24
-2.01	.7053	-.7671	-.4318	.4070	.0882	-.1937	.7024	-.7588	-.4295	1.8374	.9088	.9059	21.23
.00	.8945	-.7517	-.3473	.5658	.0941	-.1088	.8908	-.7420	-.3446	1.8374	.9104	.9074	21.23
2.00	1.0953	-.7285	-.2493	.7367	.1066	-.0104	1.0907	-.7176	-.2462	1.8386	.9118	.9089	21.24
4.00	1.3002	-.6887	-.1411	.9131	.1324	.0975	1.2957	-.6791	-.1383	1.8392	.9107	.9077	21.24
6.00	1.5050	-.6391	-.0363	1.0900	.1671	.2021	1.5006	-.6305	-.0337	1.8393	.9097	.9067	21.24
8.00	1.7200	-.5770	.0562	1.2748	.2182	.2958	1.7130	-.5645	.0599	1.8408	.9143	.9114	21.25
10.03	1.9566	-.4917	.1927	1.4850	.2848	.4316	1.9507	-.4820	.1957	1.8392	.9114	.9085	21.24
11.99	2.1036	-.4035	.2672	1.6066	.3551	.5056	2.0982	-.3953	.2698	1.8390	.9098	.9068	21.24
14.03	2.2868	-.2985	.3658	1.7610	.4449	.6052	2.2790	-.2875	.3694	1.8398	.9136	.9106	21.24
16.00	2.4700	-.1751	.4723	1.9207	.5477	.7109	2.4635	-.1665	.4751	1.8393	.9108	.9078	21.24
18.00	2.6452	-.0455	.5677	2.0705	.6581	.8065	2.6381	-.0367	.5707	1.8393	.9114	.9084	21.24
20.00	2.8174	.1001	.6829	2.2209	.7809	.9208	2.8121	.1062	.6850	1.8357	.9081	.9051	21.23
21.99	2.9578	.2465	.7896	2.3392	.9049	1.0271	2.9535	.2511	.7913	1.8343	.9063	.9034	21.22
24.01	3.0801	.4019	.8982	2.4405	1.0365	1.1349	3.0773	.4047	.8992	1.8327	.9039	.9010	21.22
RUN = 645													
-3.65	.7622	-1.3513	-.6949	.2964	.0764	-.2889	.7609	-1.3472	-.6937	2.4862	1.5043	1.5018	21.72
-1.98	.9460	-1.3519	-.6316	.4330	.0769	-.2208	.9390	-1.3326	-.6261	2.4997	1.5206	1.5181	21.73
-.01	1.1744	-1.3311	-.5331	.6121	.0801	-.1221	1.1664	-1.3111	-.5273	2.4973	1.5216	1.5191	21.73
2.01	1.3916	-1.2976	-.4384	.7788	.0959	-.0266	1.3816	-1.2749	-.4317	2.4956	1.5248	1.5223	21.73
4.01	1.6191	-1.2387	-.3292	.9620	.1243	.0802	1.6123	-1.2246	-.3249	2.4962	1.5157	1.5132	21.73
6.02	1.8460	-1.1765	-.2273	1.1413	.1628	.1822	1.8386	-1.1624	-.2230	2.4978	1.5159	1.5134	21.73
8.00	2.0954	-1.1020	-.1170	1.3433	.2146	.2933	2.0861	-1.0857	-.1119	2.4988	1.5188	1.5163	21.73
10.00	2.3212	-1.0080	-.0105	1.5238	.2816	.3997	2.3114	-.9921	-.0054	2.4959	1.5187	1.5162	21.73
12.01	2.5096	-.9001	.0881	1.6661	.3568	.4970	2.4978	-.8885	.0919	2.4964	1.5140	1.5115	21.73
14.00	2.7148	-.7780	.2004	1.8335	.4470	.6087	2.7080	-.7687	.2035	2.4961	1.5115	1.5090	21.73
15.99	2.8975	-.6451	.2915	1.9727	.5505	.7005	2.8890	-.6341	.2953	2.4967	1.5139	1.5114	21.73
18.01	3.1027	-.4980	.3847	2.1321	.6694	.7956	3.0895	-.4821	.3903	2.4989	1.5207	1.5182	21.73
19.99	3.2937	-.3324	.4957	2.2865	.7970	.9051	3.2832	-.3207	.5000	2.4956	1.5158	1.5133	21.73
22.01	3.4741	-.1584	.6061	2.4277	.9351	1.0156	3.4630	-.1468	.6104	2.4955	1.5160	1.5135	21.73
23.99	3.6065	.0130	.7124	2.5241	1.0684	1.1214	3.5963	.0230	.7162	2.4953	1.5143	1.5118	21.73

TABLE 5.- CONTINUED.

VEO-WING 1/10-SCALE RESEARCH MODEL, VSTOL TEST NO. 204

ALPHA	CL	CD	CPM	CLE2	CDE2	CME2	CLCT	CDCT	CMCT	NPR	CT	CTRF	THETAJ
RUN = 646													
-3.55	.9000	-1.8641	-.8059	.3051	.0706	-.2763	.8920	-1.8381	-.7988	3.0415	2.0272	2.0241	20.64
-1.99	1.0786	-1.8454	-.7351	.4332	.0675	-.2070	1.0716	-1.8245	-.7294	3.0414	2.0220	2.0188	20.64
-.00	1.2942	-1.8194	-.6627	.5807	.0750	-.1330	1.2845	-1.7937	-.6555	3.0427	2.0275	2.0243	20.64
2.00	1.5385	-1.7807	-.5618	.7586	.0892	-.0317	1.5273	-1.7538	-.5542	3.0423	2.0292	2.0260	20.64
4.00	1.7757	-1.7236	-.4551	.9325	.1145	.0741	1.7651	-1.7005	-.4485	3.0433	2.0255	2.0223	20.64
5.99	2.0086	-1.6637	-.3603	1.0987	.1501	.1708	1.9941	-1.6348	-.3519	3.0447	2.0324	2.0292	20.65
7.99	2.2787	-1.5787	-.2505	1.3067	.2018	.2802	2.2635	-1.5509	-.2422	3.0413	2.0317	2.0285	20.64
10.00	2.5060	-1.4760	-.1456	1.4741	.2652	.3843	2.4922	-1.4527	-.1386	3.0463	2.0271	2.0239	20.65
12.00	2.7289	-1.3626	-.0364	1.6377	.3413	.4931	2.7146	-1.3402	-.0295	3.0431	2.0266	2.0234	20.64
14.00	2.9336	-1.2297	.0625	1.7863	.4310	.5907	2.9213	-1.2119	.0681	3.0432	2.0216	2.0185	20.64
15.99	3.1537	-1.0867	.1699	1.9471	.5361	.6991	3.1386	-1.0664	.1765	3.0428	2.0254	2.0222	20.64
17.99	3.3695	-.9345	.2647	2.1014	.6518	.7963	3.3482	-.9079	.2736	3.0442	2.0341	2.0309	20.65
20.00	3.5776	-.7538	.3791	2.2605	.7806	.9083	3.5612	-.7346	.3857	3.0426	2.0253	2.0221	20.64
21.99	3.7564	-.5824	.4850	2.3851	.9077	1.0148	3.7373	-.5617	.4924	3.0408	2.0283	2.0251	20.64
24.00	3.9070	-.3910	.5878	2.4869	1.0469	1.1166	3.8901	-.3739	.5941	3.0427	2.0241	2.0209	20.64
RUN = 647													
7.89	1.0972	.1715	.2985	1.0972	.1715	.2985	1.0972	.1715	.2985	1.0000	0.0000	0.0000	0.00
7.99	1.0412	.1454	.3302	1.0412	.1454	.3302	1.0412	.1454	.3302	1.0052	0.0000	0.0000	0.00
8.00	1.0343	.1477	.3282	1.0343	.1477	.3282	1.0343	.1477	.3282	1.0057	0.0000	0.0000	0.00
8.00	1.2492	.0050	.2596	1.1539	.1846	.3057	1.2475	.0083	.2605	1.1095	.2037	.2033	19.96
8.02	1.4227	-.1818	.1883	1.2394	.1717	.2848	1.4228	-.1819	.1883	1.3034	.3999	.3982	19.39
8.00	1.6347	-.4825	.0787	1.2493	.2178	.2860	1.6336	-.4806	.0793	1.7212	.8022	.7993	20.83
8.02	1.8792	-.8165	-.0392	1.2817	.2277	.2813	1.8763	-.8114	-.0376	2.1658	1.2059	1.2031	21.75
8.01	2.0743	-1.1912	-.1604	1.2723	.2128	.2791	2.0648	-1.1744	-.1552	2.6165	1.6193	1.6169	21.73
8.02	2.2813	-1.5760	-.2515	1.2972	.2187	.2870	2.2573	-1.5321	-.2384	3.0752	2.0501	2.0468	20.72
7.99	2.8089	-2.6316	-.5691	1.2642	.2397	.2958	2.7766	-2.5714	-.5509	3.4666	3.2685	3.2604	20.29
8.00	3.5714	-4.0283	-1.0192	1.2594	.2594	.2733	3.5795	-4.0433	-1.0237	3.4396	4.8829	4.8713	20.34

TABLE 5.- CONTINUED.

VEO-WING 1/10-SCALE RESEARCH MODEL, VSTOL TEST NO. 204

ALPHA	CL	CD	CPM	CLE2	CDE2	CME2	CLCT	CDCT	CMCT	NPR	CT	CTRF	THETAJ
RUN = 648													
-3.82	.1667	.0462	-.2529	.1667	.0462	-.2529	.1667	.0462	-.2529	1.0076	0.0000	0.0000	0.00
-2.01	.2905	.0447	-.1890	.2905	.0447	-.1890	.2905	.0447	-.1890	1.0077	0.0000	0.0000	0.00
-.02	.4551	.0454	-.0905	.4551	.0454	-.0905	.4551	.0454	-.0905	1.0079	0.0000	0.0000	0.00
2.01	.6382	.0575	.0178	.6382	.0575	.0178	.6382	.0575	.0178	1.0080	0.0000	0.0000	0.00
4.00	.7863	.0792	.1085	.7863	.0792	.1085	.7863	.0792	.1085	1.0081	0.0000	0.0000	0.00
6.00	.9495	.1110	.2104	.9495	.1110	.2104	.9495	.1110	.2104	1.0085	0.0000	0.0000	0.00
8.00	1.1372	.1552	.3157	1.1372	.1552	.3157	1.1372	.1552	.3157	1.0079	0.0000	0.0000	0.00
10.01	1.2878	.2119	.4059	1.2878	.2119	.4059	1.2878	.2119	.4059	1.0080	0.0000	0.0000	0.00
11.99	1.4450	.2776	.5081	1.4450	.2776	.5081	1.4450	.2776	.5081	1.0075	0.0000	0.0000	0.00
13.97	1.6032	.3571	.6112	1.6032	.3571	.6112	1.6032	.3571	.6112	1.0072	0.0000	0.0000	0.00
16.00	1.7376	.4480	.7085	1.7376	.4480	.7085	1.7376	.4480	.7085	1.0069	0.0000	0.0000	0.00
18.00	1.8488	.5420	.7986	1.8488	.5420	.7986	1.8488	.5420	.7986	1.0075	0.0000	0.0000	0.00
19.99	1.9435	.6345	.9079	1.9435	.6345	.9079	1.9435	.6345	.9079	1.0062	0.0000	0.0000	0.00
22.02	2.0383	.7381	1.0224	2.0383	.7381	1.0224	2.0383	.7381	1.0224	1.0049	0.0000	0.0000	0.00
24.01	2.1014	.8478	1.1070	2.1014	.8478	1.1070	2.1014	.8478	1.1070	1.0042	0.0000	0.0000	0.00
RUN = 650													
-3.75	.3075	-.4283	-.4018	.1726	.0657	-.2801	.3082	-.4310	-.4024	1.4179	.4973	.5120	19.02
-2.00	.4925	-.4274	-.3110	.3436	.0595	-.1900	.4941	-.4329	-.3123	1.4149	.4944	.5091	19.01
.00	.6978	-.4196	-.2122	.5319	.0620	-.0912	.6996	-.4247	-.2135	1.4148	.4947	.5094	19.01
1.99	.8398	-.3990	-.1324	.6576	.0756	-.0117	.8421	-.4051	-.1340	1.4132	.4937	.5083	19.01
4.01	1.0352	-.3660	-.0200	.8385	.0970	.0995	1.0398	-.3768	-.0228	1.4140	.4886	.5031	19.01
6.01	1.2190	-.3342	.0745	1.0018	.1309	.1966	1.2196	-.3355	.0742	1.4251	.4987	.5134	19.03
7.98	1.4189	-.2821	.1739	1.1854	.1759	.2961	1.4192	-.2827	.1737	1.4253	.4993	.5141	19.03
10.02	1.6008	-.2055	.2720	1.3511	.2439	.3943	1.6011	-.2061	.2719	1.4268	.4994	.5141	19.03
12.01	1.7990	-.1230	.3745	1.5333	.3184	.4971	1.7987	-.1226	.3746	1.4259	.5005	.5152	19.03
14.00	1.9732	-.0293	.4680	1.6913	.4043	.5910	1.9719	-.0272	.4685	1.4265	.5023	.5171	19.03
16.00	2.1435	.0801	.5748	1.8468	.5033	.6977	2.1423	.0818	.5752	1.4263	.5020	.5168	19.03
18.02	2.2685	.1881	.6607	1.9577	.6000	.7834	2.2678	.1891	.6610	1.4258	.5012	.5160	19.03
20.01	2.4243	.3129	.7807	2.0995	.7134	.9034	2.4237	.3136	.7810	1.4260	.5009	.5157	19.03
22.02	2.5517	.4430	.8959	2.2138	.8312	1.0183	2.5518	.4429	.8959	1.4251	.4998	.5146	19.03
24.01	2.6459	.5742	.9895	2.2941	.9509	1.1121	2.6454	.5747	.9897	1.4255	.5007	.5155	19.03

TABLE 5.- CONTINUED.

VEO-WING 1/10-SCALE RESEARCH MODEL, VSTOL TEST NO. 204

ALPHA	CL	CD	CPM	CLE2	CDE2	CME2	CLCT	CDCT	CMCT	NPR	CT	CTRF	THETAJ
RUN = 651													
-3.74	.3632	-.8154	-.4322	.1713	.0699	-.2395	.3665	-.8306	-.4355	1.8450	.8848	.9059	15.97
-2.01	.5272	-.8111	-.3630	.3075	.0669	-.1695	.5312	-.8271	-.3665	1.8416	.8839	.9051	16.06
.01	.6990	-.7992	-.2836	.4488	.0698	-.0953	.7038	-.8157	-.2923	1.8419	.8833	.9044	16.05
1.98	.8961	-.7795	-.1920	.6148	.0806	.0022	.9013	-.7953	-.1956	1.8392	.8838	.9050	16.13
4.00	1.1021	-.7433	-.0820	.7925	.1037	.1110	1.1089	-.7618	-.0862	1.8410	.8808	.9018	16.08
6.00	1.3056	-.7070	.0263	.9658	.1314	.2199	1.3120	-.7226	.0227	1.8413	.8835	.9046	16.07
7.99	1.4883	-.6502	.1095	1.1193	.1758	.3033	1.4952	-.6655	.1059	1.8407	.8836	.9048	16.09
10.00	1.6833	-.5769	.2007	1.2862	.2349	.3940	1.6911	-.5929	.1969	1.8416	.8827	.9037	16.06
12.00	1.9130	-.4869	.3193	1.4883	.3095	.5124	1.9219	-.5036	.3153	1.8412	.8815	.9026	16.07
14.00	2.1242	-.3798	.4256	1.6720	.4009	.6188	2.1339	-.3965	.4215	1.8409	.8811	.9021	16.08
16.00	2.2868	-.2729	.5166	1.8071	.4934	.7098	2.2960	-.2876	.5129	1.8422	.8830	.9041	16.04
18.00	2.4391	-.1580	.6100	1.9333	.5928	.8027	2.4481	-.1714	.6066	1.8443	.8842	.9053	15.97
20.01	2.6121	-.0249	.7250	2.0790	.7071	.9186	2.6215	-.0378	.7216	1.8418	.8845	.9056	16.05
22.01	2.7550	.1071	.8338	2.1948	.8242	1.0276	2.7621	.0980	.8313	1.8443	.8888	.9100	15.98
23.99	2.8606	.2510	.9320	2.2788	.9430	1.1254	2.8718	.2377	.9282	1.8414	.8830	.9041	16.06
RUN = 652													
-3.70	.6453	-1.3667	-.6452	.2308	.0691	-.2600	.6274	-1.3044	-.6285	2.5010	1.4635	1.4944	19.80
-2.00	.8034	-1.3645	-.5896	.3432	.0664	-.2019	.8122	-1.3918	-.5970	2.5059	1.4719	1.5030	19.82
.00	1.0220	-1.3433	-.4958	.5130	.0692	-.1087	1.0322	-1.3718	-.5036	2.5041	1.4703	1.5014	19.82
2.01	1.2341	-1.3119	-.4005	.6758	.0816	-.0134	1.2454	-1.3403	-.4084	2.5049	1.4700	1.5011	19.82
4.01	1.4541	-1.2687	-.2962	.8475	.1046	.0910	1.4664	-1.2966	-.3040	2.5051	1.4702	1.5013	19.82
6.02	1.6846	-1.2171	-.1890	1.0282	.1379	.1994	1.6959	-1.2406	-.1958	2.5074	1.4744	1.5056	19.83
8.00	1.8764	-1.1480	-.1046	1.1743	.1827	.2835	1.8891	-1.1720	-.1116	2.5059	1.4734	1.5045	19.82
10.00	2.1269	-1.0658	.0056	1.3760	.2442	.3951	2.1377	-1.0846	.0000	2.5053	1.4788	1.5100	19.82
12.01	2.3506	-.9514	.1150	1.5603	.3217	.5014	2.3142	-.8929	.1327	2.5051	1.4675	1.4985	19.82
14.01	2.5648	-.8387	.2159	1.7292	.4080	.6030	2.5252	-.7795	.2343	2.5059	1.4697	1.5008	19.82
16.00	2.7645	-.7105	.3151	1.8831	.5108	.7035	2.7794	-.7312	.3085	2.5052	1.4750	1.5062	19.82
18.00	2.9308	-.5734	.4085	2.0097	.6129	.7959	2.9491	-.5970	.4008	2.5057	1.4708	1.5019	19.82
20.00	3.1146	-.4237	.5204	2.1528	.7300	.9078	3.1336	-.4465	.5127	2.5052	1.4709	1.5020	19.82
22.01	3.2719	-.2666	.6276	2.2695	.8531	1.0153	3.2912	-.2881	.6202	2.5068	1.4717	1.5029	19.83
24.00	3.4134	-.1043	.7342	2.3723	.9807	1.1220	3.4328	-.1245	.7270	2.5050	1.4726	1.5037	19.82

TABLE 5.- CONTINUED.

VFJ-WING 1/10-SCALE RESEARCH MODEL, VSTOL TEST NO. 204

ALPHA	CL	CD	CPM	CLE2	CDE2	CME2	CLCT	CDCT	CMCT	NPR	CT	CTRF	THETAJ
RUN = 653													
-3.71	.5820	-1.3999	-.6853	.1627	.0523	-.2955	.5876	-1.4193	-.6905	2.5042	1.4803	1.5116	19.82
-1.93	.8073	-1.4014	-.5872	.3412	.0430	-.1958	.8115	-1.4146	-.5908	2.5030	1.4864	1.5178	19.81
-.01	.9920	-1.3751	-.5111	.4789	.0505	-.1205	.9976	-1.3907	-.5153	2.5012	1.4838	1.5152	19.80
2.00	1.1983	-1.3516	-.4225	.6331	.0603	-.0303	1.2023	-1.3617	-.4253	2.5039	1.4893	1.5208	19.82
4.06	1.4563	-1.3059	-.2948	.8427	.0812	.0962	1.4623	-1.3196	-.2986	2.5016	1.4854	1.5168	19.81
6.02	1.6693	-1.2576	-.1916	1.0063	.1118	.2006	1.6738	-1.2668	-.1942	2.5025	1.4900	1.5215	19.81
8.05	1.9138	-1.1828	-.0884	1.2046	.1590	.3028	1.9203	-1.1952	-.0920	2.5016	1.4863	1.5177	19.81
9.91	2.1243	-1.1082	.0017	1.3687	.2154	.3947	2.1281	-1.1149	-.0002	2.5029	1.4925	1.5241	19.81
12.03	2.3479	-.9872	.1188	1.5524	.2941	.5075	2.3603	-1.0072	.1127	2.5018	1.4769	1.5081	19.81
14.03	2.5807	-.8696	.2279	1.7377	.3880	.6181	2.5905	-.8843	.2233	2.5017	1.4827	1.5140	19.81
16.01	2.7660	-.7479	.3225	1.8791	.4814	.7131	2.7753	-.7608	.3184	2.5005	1.4844	1.5158	19.80
17.97	2.9430	-.6165	.4215	2.0141	.5822	.8123	2.9523	-.6285	.4176	2.5002	1.4851	1.5165	19.80
19.98	3.1230	-.4739	.5291	2.1493	.6952	.9213	3.1296	-.4818	.5264	2.5028	1.4899	1.5214	19.81
22.02	3.3019	-.3048	.6540	2.2902	.8262	1.0450	3.3114	-.3154	.6504	2.4985	1.4861	1.5175	19.79
24.04	3.4178	-.1388	.7412	2.3712	.9513	1.1305	3.4320	-.1535	.7359	2.4987	1.4799	1.5112	19.79
RUN = 654													
-3.65	.7551	-1.9081	-.8194	.1715	.0316	-.2889	.7624	-1.9321	-.8260	3.0438	1.9756	2.0257	20.40
-2.04	.9544	-1.9037	-.7473	.3143	.0255	-.2148	.9601	-1.9207	-.7520	3.0387	1.9825	2.0327	20.40
-.00	1.1906	-1.8767	-.6556	.4820	.0288	-.1231	1.1967	-1.8932	-.6603	3.0381	1.9829	2.0330	20.40
1.99	1.4285	-1.8470	-.5605	.6516	.0388	-.0265	1.4327	-1.8572	-.5637	3.0374	1.9892	2.0395	20.40
4.03	1.6743	-1.7919	-.4517	.8318	.0628	.0819	1.6799	-1.8042	-.4553	3.0371	1.9869	2.0371	20.40
5.99	1.9208	-1.7400	-.3454	1.0128	.0905	.1898	1.9241	-1.7466	-.3473	3.0427	1.9928	2.0433	20.40
8.04	2.1773	-1.6523	-.2343	1.2061	.1406	.2998	2.1828	-1.6625	-.2373	3.0403	1.9887	2.0391	20.40
10.07	2.3921	-1.5538	-.1439	1.3623	.1969	.3882	2.4020	-1.5706	-.1489	3.0367	1.9811	2.0311	20.40
11.99	2.6322	-1.4448	-.0349	1.5440	.2709	.4973	2.6424	-1.4608	-.0398	3.0390	1.9816	2.0317	20.40
14.03	2.8580	-1.3133	.0657	1.7094	.3623	.5979	2.8688	-1.3291	.0607	3.0387	1.9814	2.0315	20.40
15.97	3.0723	-1.1823	.1674	1.8638	.4586	.7012	3.0798	-1.1925	.1641	3.0391	1.9876	2.0379	20.40
18.03	3.2644	-1.0296	.2638	1.9998	.5645	.7968	3.2743	-1.0420	.2597	3.0404	1.9846	2.0349	20.40
19.99	3.4526	-.8746	.3764	2.1349	.6744	.9090	3.4636	-.8876	.3719	3.0400	1.9834	2.0336	20.40
21.98	3.6287	-.7066	.4876	2.2571	.7965	1.0206	3.6393	-.7182	.4835	3.0383	1.9846	2.0348	20.40
RUN = 655													
7.99	1.1325	.1567	.3133	1.1325	.1567	.3133	1.1325	.1567	.3133	1.0079	0.0000	0.0000	0.00
7.98	1.1351	.1138	.3138	1.0885	.2050	.3425	1.1356	.1128	.3135	1.0167	.0990	.1024	19.04
8.00	1.2602	-.0331	.2560	1.1679	.1479	.3030	1.2598	-.0375	.2561	1.1152	.2007	.2076	18.39
8.00	1.3316	-.2329	.1766	1.1450	.1377	.2740	1.3305	-.2308	.1772	1.3184	.4024	.4149	18.73
8.03	1.5965	-.5427	.1138	1.2349	.1759	.3089	1.6035	-.5567	.1100	1.7268	.7847	.8045	18.68
8.03	1.6978	-.9333	.0088	1.1868	.1712	.2787	1.7014	-.9413	.0069	2.1706	1.1914	1.2170	16.80
8.03	1.9141	-1.2603	-.1395	1.1593	.1538	.2774	1.8808	-1.1978	-.1210	2.5959	1.5694	1.6030	20.06
8.04	2.1378	-1.6279	-.2410	1.1750	.1499	.2886	2.1514	-1.6531	-.2485	3.0325	1.9720	2.0218	20.40
7.96	2.6894	-2.6953	-.5448	1.1536	.1682	.2948	2.6646	-2.6491	-.5312	3.3991	3.1509	3.2494	20.24
7.97	3.4722	-4.1649	-.9776	1.1514	.1626	.2906	3.4427	-4.1099	-.9614	3.4113	4.7606	4.9106	20.24

TABLE 5.- CONTINUED.

VEO-WING 1/10-SCALE RESEARCH MODEL,VSTOL TEST NO. 204

ALPHA	CL	CD	CPM	CLE2	CDE2	CME2	CLCT	CDCT	CMCT	NPR	CT	CTRF	THETAJ
RUN = 656													
-3.66	.7457	-1.8525	-.8077	.1702	.0613	-.2839	.7310	-1.8035	-.7943	3.0075	1.9499	1.9984	20.40
-1.99	.9806	-1.8509	-.7182	.3464	.0546	-.1919	.9614	-1.7932	-.7023	3.0147	1.9593	2.0083	20.40
-.02	1.1758	-1.8234	-.6496	.4762	.0594	-.1233	1.1545	-1.7661	-.6336	3.0146	1.9596	2.0086	20.40
1.98	1.4191	-1.7841	-.5417	.6561	.0685	-.0166	1.3978	-1.7322	-.5270	3.0125	1.9547	2.0035	20.40
4.00	1.6615	-1.7364	-.4344	.8335	.0888	.0909	1.6380	-1.6846	-.4195	3.0100	1.9556	2.0043	20.40
6.00	1.8818	-1.6816	-.3390	.9873	.1201	.1892	1.8534	-1.6242	-.3212	3.0129	1.9625	2.0115	20.40
7.99	2.1207	-1.6040	-.2416	1.1665	.1617	.2844	2.0923	-1.5514	-.2260	3.0061	1.9584	2.0071	20.40
10.00	2.4025	-1.5118	-.1196	1.3822	.2269	.4087	2.3678	-1.4527	-.1016	3.0139	1.9668	2.0159	20.40
12.00	2.6164	-1.4006	-.0237	1.5387	.2975	.5034	2.5822	-1.3467	-.0069	3.0109	1.9623	2.0112	20.40
14.01	2.8530	-1.2629	.0887	1.7225	.3875	.6129	2.8229	-1.2190	.1026	3.0066	1.9519	2.0004	20.40
15.99	3.0564	-1.1285	.1857	1.8659	.4871	.7116	3.0212	-1.0806	.2012	3.0108	1.9580	2.0068	20.40
17.98	3.2600	-.9811	.2892	2.0135	.5924	.8153	3.2227	-.9340	.3050	3.0105	1.9586	2.0074	20.40
19.99	3.4346	-.8257	.3904	2.1334	.7034	.9166	3.3954	-.7797	.4062	3.0113	1.9589	2.0078	20.40
21.98	3.6156	-.6625	.5011	2.2583	.8247	1.0288	3.5710	-.6137	.5184	3.0099	1.9646	2.0135	20.40
23.99	3.7523	-.4872	.6018	2.3449	.9503	1.1290	3.7073	-.4412	.6186	3.0106	1.9628	2.0117	20.40
RUN = 657													
8.00	1.1257	.1828	.3181	1.1257	.1828	.3181	1.1257	.1828	.3181	1.0061	0.0000	0.0000	0.00
7.99	1.1181	.1426	.3098	1.0723	.2324	.3381	1.1193	.1402	.3090	1.0152	.0974	.1008	19.05
8.00	1.2429	-.0056	.2520	1.1529	.1756	.2981	1.2449	-.0097	.2509	1.1105	.1956	.2023	18.41
8.00	1.3609	-.1994	.2019	1.1775	.1654	.2977	1.3628	-.2032	.2009	1.3113	.3959	.4083	18.70
7.98	1.5552	-.5216	.0933	1.1929	.2004	.2891	1.5607	-.5326	.0904	1.7279	.7880	.8079	18.66
8.00	1.6991	-.8935	.0231	1.1964	.2014	.2884	1.7078	-.9126	.0185	2.1602	1.1794	1.2047	16.66
8.01	1.9680	-1.2257	-.1013	1.2156	.1853	.3146	1.9365	-1.1666	-.0839	2.5961	1.5656	1.5991	20.06
8.00	2.1449	-1.5902	-.2276	1.1880	.1793	.2996	2.1143	-1.5336	-.2107	3.0085	1.9628	2.0117	20.40
7.99	2.6558	-2.5891	-.5168	1.1589	.1959	.3019	2.6221	-2.5264	-.4983	3.3434	3.0692	3.1618	20.27
7.97	3.4513	-4.0574	-.9354	1.1603	.2114	.3175	3.4513	-4.0574	-.9354	3.3754	4.7000	4.8448	20.25
RUN = 658													
-3.73	.1512	.0550	-.2533	.1512	.0550	-.2533	.1512	.0550	-.2533	1.0063	0.0000	0.0000	0.00
-1.99	.3140	.0460	-.1577	.3140	.0460	-.1577	.3140	.0460	-.1577	1.0070	0.0000	0.0000	0.00
.00	.4332	.0511	-.0918	.4332	.0511	-.0918	.4332	.0511	-.0918	1.0061	0.0000	0.0000	0.00
2.00	.6076	.0604	.0134	.6076	.0604	.0134	.6076	.0604	.0134	1.0070	0.0000	0.0000	0.00
4.00	.7781	.0835	.1193	.7781	.0835	.1193	.7781	.0835	.1193	1.0065	0.0000	0.0000	0.00
6.01	.9475	.1112	.2267	.9475	.1112	.2267	.9475	.1112	.2267	1.0068	0.0000	0.0000	0.00
7.99	1.0896	.1549	.3071	1.0896	.1549	.3071	1.0896	.1549	.3071	1.0065	0.0000	0.0000	0.00
10.01	1.2839	.2190	.4249	1.2839	.2190	.4249	1.2839	.2190	.4249	1.0065	0.0000	0.0000	0.00
12.00	1.4346	.2849	.5223	1.4346	.2849	.5223	1.4346	.2849	.5223	1.0060	0.0000	0.0000	0.00
13.99	1.6086	.3658	.6358	1.6086	.3658	.6358	1.6086	.3658	.6358	1.0059	0.0000	0.0000	0.00
18.01	1.8400	.5484	.8231	1.8400	.5484	.8231	1.8400	.5484	.8231	1.0055	0.0000	0.0000	0.00
19.99	1.9334	.6395	.9258	1.9334	.6395	.9258	1.9334	.6395	.9258	1.0051	0.0000	0.0000	0.00
21.98	2.0163	.7375	1.0310	2.0163	.7375	1.0310	2.0163	.7375	1.0310	1.0042	0.0000	0.0000	0.00
24.00	2.0911	.8468	1.1372	2.0911	.8468	1.1372	2.0911	.8468	1.1372	1.0030	0.0000	0.0000	0.00

TABLE 5.- CONTINUED.

VEO-WING 1/10-SCALE RESEARCH MODEL, VSTOL TEST NO. 204

ALPHA	CL	CD	CPM	CLE2	CDE2	CME2	CLCT	CDCT	CMCT	NPR	CT	CTRF	THETAJ
RUN = 660													
-3.70	.3790	-.4165	-.4187	.2198	.0655	-.2859	.3766	-.4093	-.4167	1.3948	.5075	.5075	21.98
-1.99	.5463	-.4149	-.3378	.3725	.0630	-.2047	.5434	-.4068	-.3356	1.3948	.5086	.5086	21.98
-.02	.7328	-.4066	-.2400	.5426	.0653	-.1068	.7295	-.3984	-.2376	1.3953	.5089	.5089	21.98
2.00	.8929	-.3851	-.1548	.6856	.0811	-.0213	.8888	-.3758	-.1521	1.3959	.5102	.5102	21.98
4.02	1.0920	-.3553	-.0416	.8682	.1037	.0921	1.0874	-.3457	-.0388	1.3957	.5106	.5106	21.98
6.01	1.2869	-.3154	.0668	1.0472	.1357	.2006	1.2818	-.3058	.0697	1.3959	.5109	.5109	21.98
7.99	1.4430	-.2608	.1420	1.1882	.1810	.2755	1.4380	-.2521	.1446	1.3960	.5100	.5100	21.98
9.99	1.6606	-.1852	.2580	1.3904	.2478	.3916	1.6551	-.1764	.2607	1.3961	.5104	.5104	21.98
12.01	1.8512	-.0985	.3654	1.5663	.3240	.4988	1.8458	-.0905	.3679	1.3959	.5097	.5097	21.98
14.00	2.0265	-.0017	.4622	1.7265	.4116	.5959	2.0203	.0070	.4650	1.3966	.5107	.5107	21.98
15.99	2.1894	.1073	.5634	1.8752	.5099	.6971	2.1828	.1157	.5662	1.3958	.5107	.5107	21.98
17.98	2.3321	.2165	.6651	2.0041	.6080	.7988	2.3252	.2247	.6679	1.3952	.5107	.5107	21.98
20.00	2.4928	.3419	.7729	2.1396	.7233	.9072	2.4740	.3516	.7763	1.3950	.5131	.5131	21.98
22.01	2.6018	.4740	.8827	2.2478	.8407	1.0161	2.5950	.4810	.8853	1.3947	.5098	.5098	21.98
24.00	2.7068	.6093	.9851	2.3397	.9640	1.1187	2.6992	.6166	.9879	1.3943	.5105	.5105	21.98
RUN = 661													
-3.99	.4820	-.7760	-.5173	.1958	.0873	-.2782	.4790	-.7670	-.5148	1.7865	.9095	.9095	22.03
-1.99	.6706	-.7750	-.4335	.3583	.0818	-.1938	.6666	-.7637	-.4303	1.7864	.9121	.9120	22.03
.01	.8633	-.7650	-.3435	.5190	.0857	-.1023	.8567	-.7486	-.3389	1.7875	.9178	.9177	22.03
2.00	1.0501	-.7424	-.2496	.6759	.0967	-.0082	1.0424	-.7252	-.2447	1.7873	.9188	.9187	22.03
4.00	1.2406	-.7008	-.1425	.8403	.1190	.0973	1.2352	-.6897	-.1392	1.7878	.9124	.9123	22.03
6.00	1.4394	-.6566	-.0416	1.0098	.1506	.1988	1.4325	-.6438	-.0377	1.7870	.9146	.9145	22.03
8.00	1.6553	-.5972	.0413	1.1950	.1992	.3030	1.6453	-.5800	.0665	1.7884	.9199	.9198	22.03
9.97	1.8494	-.5221	.1558	1.3626	.2570	.3973	1.8395	-.5063	.1607	1.7880	.9187	.9187	22.03
12.01	2.0584	-.4263	.2684	1.5449	.3340	.5095	2.0486	-.4118	.2730	1.7878	.9175	.9175	22.03
14.00	2.2426	-.3218	.3648	1.7047	.4180	.6053	2.2339	-.3098	.3687	1.7878	.9148	.9148	22.03
16.01	2.4257	-.2023	.4719	1.8613	.5190	.7126	2.4159	-.1898	.4760	1.7870	.9159	.9159	22.03
18.01	2.5760	-.0848	.5659	1.9857	.6178	.8071	2.5646	-.0713	.5705	1.7862	.9177	.9177	22.03
20.01	2.7459	.0575	.6811	2.1333	.7370	.9215	2.7359	.0686	.6850	1.7867	.9149	.9149	22.03
22.02	2.8989	.2037	.7984	2.2627	.8613	1.0389	2.8885	.2144	.8023	1.7866	.9150	.9149	22.03
23.99	3.0017	.3465	.8945	2.3438	.9814	1.1348	2.9914	.3565	.8983	1.7858	.9144	.9144	22.03

TABLE 5.- CONTINUED.

VFO-WING 1/10-SCALE RESEARCH MODEL,VSTOL TEST NO. 204

ALPHA	CL	CD	CPM	CLE2	CDE2	CME2	CLCT	CDCT	CMCT	NPR	CT	CTRF	THETAJ
RUN = 662													
-3.65	.7149	-1.3586	-.6791	.2282	.0800	-.2705	.7089	-1.3409	-.6741	2.4357	1.5187	1.5187	22.34
-2.01	.8799	-1.3455	-.6096	.3529	.0765	-.2017	.8742	-1.3300	-.6052	2.4322	1.5165	1.5165	22.34
.01	1.0968	-1.3243	-.5206	.5192	.0808	-.1119	1.0895	-1.3066	-.5154	2.4327	1.5192	1.5192	22.34
2.01	1.3241	-1.2971	-.4173	.6953	.0924	-.0071	1.3138	-1.2742	-.4106	2.4326	1.5251	1.5251	22.34
4.00	1.5251	-1.2457	-.3167	.8516	.1146	.0916	1.5172	-1.2296	-.3119	2.4324	1.5179	1.5179	22.34
5.99	1.7488	-1.1934	-.2130	1.0256	.1479	.1969	1.7375	-1.1724	-.2066	2.4319	1.5238	1.5238	22.34
8.00	1.9576	-1.1209	-.1233	1.1881	.1937	.2865	1.9458	-1.1008	-.1170	2.4330	1.5233	1.5233	22.34
9.99	2.1998	-1.0188	-.0036	1.3921	.2572	.4026	2.1943	-1.0102	-.0009	2.4326	1.5102	1.5102	22.34
12.00	2.4212	-.9132	.0981	1.5683	.3353	.5048	2.4144	-.9033	.1013	2.4321	1.5120	1.5120	22.34
13.99	2.6243	-.7998	.1940	1.7274	.4198	.6012	2.6161	-.7886	.1977	2.4335	1.5138	1.5138	22.34
16.00	2.8306	-.6598	.3062	1.8932	.5252	.7127	2.8238	-.6512	.3092	2.4325	1.5110	1.5110	22.34
18.00	2.9964	-.5315	.3928	2.0144	.6248	.8009	2.9854	-.5186	.3974	2.4324	1.5170	1.5170	22.34
19.99	3.1890	-.3752	.5134	2.1679	.7456	.9213	3.1781	-.3632	.5178	2.4320	1.5163	1.5163	22.34
21.99	3.3420	-.2191	.6166	2.2810	.8671	1.0251	3.3292	-.2059	.6216	2.4322	1.5184	1.5184	22.34
23.99	3.4835	-.0495	.7231	2.3863	.9979	1.1312	3.4713	-.0379	.7277	2.4316	1.5169	1.5169	22.34
RUN = 663													
-3.66	.8558	-1.8578	-.8493	.1956	.0761	-.2878	.8417	-1.8166	-.8374	3.0061	2.0435	2.0435	22.50
-1.98	1.0889	-1.8442	-.7519	.3740	.0657	-.1917	1.0752	-1.8073	-.7411	2.9969	2.0393	2.0393	22.50
.01	1.3072	-1.8114	-.6727	.5258	.0744	-.1119	1.2913	-1.7732	-.6613	2.9981	2.0413	2.0413	22.50
2.00	1.5420	-1.7770	-.5808	.6935	.0846	-.0188	1.5230	-1.7353	-.5682	2.9974	2.0458	2.0458	22.50
4.00	1.7715	-1.7169	-.4716	.8617	.1080	.0886	1.7540	-1.6819	-.4608	2.9949	2.0392	2.0391	22.50
6.00	2.0082	-1.6630	-.3744	1.0294	.1399	.1892	1.9836	-1.6177	-.3602	2.9953	2.0516	2.0515	22.50
8.01	2.2599	-1.5616	-.2608	1.2286	.1886	.2973	2.2438	-1.5345	-.2522	2.9954	2.0315	2.0315	22.50
10.01	2.5123	-1.4608	-.1516	1.4204	.2522	.4064	2.4954	-1.4343	-.1430	2.9971	2.0314	2.0314	22.50
11.99	2.7190	-1.3526	-.0604	1.5673	.3236	.4983	2.6999	-1.3248	-.0511	2.9955	2.0337	2.0337	22.50
14.00	2.9695	-1.2170	.0549	1.7593	.4186	.6138	2.9489	-1.1891	.0644	2.9956	2.0347	2.0346	22.50
16.00	3.1560	-1.0736	.1520	1.8925	.5151	.7096	3.1374	-1.0502	.1602	2.9960	2.0299	2.0299	22.50
18.00	3.3474	-.9230	.2446	2.0284	.6214	.8025	3.3272	-.8994	.2531	2.9958	2.0310	2.0310	22.50
19.99	3.5424	-.7609	.3529	2.1682	.7393	.9118	3.5191	-.7354	.3624	2.9941	2.0345	2.0344	22.50
22.00	3.7283	-.5913	.4668	2.2968	.8656	1.0279	3.6985	-.5610	.4785	2.9936	2.0426	2.0425	22.50
24.00	3.8662	-.4082	.5672	2.3881	.9943	1.1270	3.8389	-.3823	.5776	2.9951	2.0377	2.0376	22.50
RUN = 664													
8.00	1.1023	.1661	.3111	1.1023	.1661	.3111	1.1023	.1661	.3111	1.0039	0.0000	0.0000	0.00
7.99	1.1896	.1319	.2935	1.1368	.2137	.3201	1.1911	.1296	.2928	1.0407	.0973	.0973	24.88
8.00	1.2927	.0256	.2484	1.1888	.1979	.3006	1.2921	.0266	.2487	1.1262	.2012	.2012	23.10
8.00	1.4117	-.1534	.1895	1.2092	.1964	.2940	1.4096	-.1497	.1906	1.3017	.4042	.4042	22.06
7.99	1.6063	-.5026	.0785	1.1972	.2043	.2937	1.5979	-.4881	.0829	1.6873	.8167	.8167	22.07
8.00	1.8317	-.8364	-.0087	1.2214	.2164	.3125	1.8232	-.8218	-.0043	2.1061	1.2168	1.2168	22.10
8.00	2.0448	-1.1779	-.1265	1.2311	.2110	.3087	2.0399	-1.1695	-.1239	2.5414	1.6097	1.6098	22.36
7.98	2.2284	-1.5561	-.2782	1.1919	.2049	.2831	2.2064	-1.5187	-.2663	2.9953	2.0434	2.0434	22.50
8.00	2.8157	-2.5285	-.5902	1.1807	.2396	.2998	2.8079	-2.5154	-.5860	3.3651	3.2151	3.2149	22.57
8.00	3.6209	-3.8859	-1.0339	1.1784	.2500	.2949	3.6190	-3.8829	-1.0329	3.3277	4.8036	4.8032	22.57

TABLE 5.- CONTINUED.

VEO-WING 1/10-SCALE RESEARCH MODEL, VSTOL TEST NO. 204

ALPHA	CL	CD	CPM	CLE2	CDE2	CME2	CLCT	CDCT	CMCT	NPR	CT	CTRF	THETAJ
RUN = 666													
-3.75	.1692	.1291	-.2518	.1692	.1291	-.2518	.1692	.1291	-.2518	1.0079	0.0000	0.0000	0.00
-2.00	.3504	.1199	-.1498	.3504	.1199	-.1498	.3504	.1199	-.1498	1.0079	0.0000	0.0000	0.00
.01	.4723	.1255	-.0675	.4723	.1255	-.0675	.4723	.1255	-.0675	1.0076	0.0000	0.0000	0.00
2.00	.6354	.1371	.0346	.6354	.1371	.0346	.6354	.1371	.0346	1.0076	0.0000	0.0000	0.00
3.99	.7892	.1205	.1427	.7892	.1205	.1427	.7892	.1205	.1427	1.0044	0.0000	0.0000	0.00
6.00	.9479	.1290	.2487	.9479	.1290	.2487	.9479	.1290	.2487	1.0023	0.0000	0.0000	0.00
8.01	1.1410	.1763	.3563	1.1410	.1763	.3563	1.1410	.1763	.3563	1.0021	0.0000	0.0000	0.00
10.01	1.3027	.2356	.4517	1.3027	.2356	.4517	1.3027	.2356	.4517	1.0019	0.0000	0.0000	0.00
12.03	1.4777	.2930	.5589	1.4777	.2930	.5589	1.4777	.2930	.5589	1.0013	0.0000	0.0000	0.00
13.99	1.6175	.3729	.6481	1.6175	.3729	.6481	1.6175	.3729	.6481	1.0012	0.0000	0.0000	0.00
15.99	1.7462	.4620	.7500	1.7462	.4620	.7500	1.7462	.4620	.7500	1.0004	0.0000	0.0000	0.00
17.99	1.8481	.5489	.8574	1.8481	.5489	.8574	1.8481	.5489	.8574	1.0018	0.0000	0.0000	0.00
19.99	1.9338	.6393	.9511	1.9338	.6393	.9511	1.9338	.6393	.9511	1.0022	0.0000	0.0000	0.00
22.01	2.0217	.7400	1.0607	2.0217	.7400	1.0607	2.0217	.7400	1.0607	1.0020	0.0000	0.0000	0.00
24.02	2.1065	.8527	1.1603	2.1065	.8527	1.1603	2.1065	.8527	1.1603	1.0005	0.0000	0.0000	0.00
.01	.4870	.0659	-.0569	.4870	.0659	-.0569	.4870	.0659	-.0569	1.0027	0.0000	0.0000	0.00
-3.74	.1867	.0614	-.2389	.1867	.0614	-.2389	.1867	.0614	-.2389	1.0034	0.0000	0.0000	0.00
-2.02	.3254	.0569	-.1549	.3254	.0569	-.1549	.3254	.0569	-.1549	1.0030	0.0000	0.0000	0.00
-.03	.4656	.0629	-.0743	.4656	.0629	-.0743	.4656	.0629	-.0743	1.0026	0.0000	0.0000	0.00
1.99	.6412	.0725	.0421	.6412	.0725	.0421	.6412	.0725	.0421	1.0023	0.0000	0.0000	0.00
4.00	.7935	.0929	.1457	.7935	.0929	.1457	.7935	.0929	.1457	1.0018	0.0000	0.0000	0.00
6.01	.9614	.1284	.2535	.9614	.1284	.2535	.9614	.1284	.2535	1.0017	0.0000	0.0000	0.00
8.01	1.1442	.1770	.3579	1.1442	.1770	.3579	1.1442	.1770	.3579	1.0013	0.0000	0.0000	0.00
3.99	.7849	.1081	.1414	.7849	.1081	.1414	.7849	.1081	.1414	1.0018	0.0000	0.0000	0.00
RUN = 667													
-3.73	.2196	.0552	-.2221	.2196	.0552	-.2221	.2196	.0552	-.2221	1.0011	0.0000	0.0000	0.00
-1.99	.3220	.0547	-.1634	.3220	.0547	-.1634	.3220	.0547	-.1634	1.0008	0.0000	0.0000	0.00
.02	.5054	.0559	-.0539	.5054	.0559	-.0539	.5054	.0559	-.0539	1.0007	0.0000	0.0000	0.00
2.01	.6266	.0699	.0246	.6266	.0699	.0246	.6266	.0699	.0246	1.0008	0.0000	0.0000	0.00
3.99	.7944	.0895	.1391	.7944	.0895	.1391	.7944	.0895	.1391	1.0000	0.0000	0.0000	0.00
6.00	.9511	.1195	.2400	.9511	.1195	.2400	.9511	.1195	.2400	1.0000	0.0000	0.0000	0.00
8.02	1.1248	.1654	.3416	1.1248	.1654	.3416	1.1248	.1654	.3416	1.0000	0.0000	0.0000	0.00
10.01	1.3038	.2242	.4448	1.3038	.2242	.4448	1.3038	.2242	.4448	1.0000	0.0000	0.0000	0.00
11.99	1.4665	.2942	.5498	1.4665	.2942	.5498	1.4665	.2942	.5498	1.0000	0.0000	0.0000	0.00
14.00	1.5983	.3731	.6362	1.5983	.3731	.6362	1.5983	.3731	.6362	1.0000	0.0000	0.0000	0.00
16.00	1.7419	.4631	.7452	1.7419	.4631	.7452	1.7419	.4631	.7452	1.0000	0.0000	0.0000	0.00
17.99	1.8269	.5442	.8405	1.8269	.5442	.8405	1.8269	.5442	.8405	1.0000	0.0000	0.0000	0.00
19.97	1.9293	.6385	.9474	1.9293	.6385	.9474	1.9293	.6385	.9474	1.0000	0.0000	0.0000	0.00
22.00	2.0354	.7478	1.0654	2.0354	.7478	1.0654	2.0354	.7478	1.0654	1.0000	0.0000	0.0000	0.00
23.99	2.1096	.8568	1.1516	2.1096	.8568	1.1516	2.1096	.8568	1.1516	1.0000	0.0000	0.0000	0.00

TABLE 5.- CONTINUED.

VEG-WING 1/10-SCALE RESEARCH MODEL, VSTOL TEST NO. 204

ALPHA	CL	CD	CPM	CLE2	CDE2	CME2	CLCT	CDCT	CMCT	NPR	CT	CTRF	THETAJ
RUN = 669													
-3.76	.4393	-.4184	-.3823	.2822	.0681	-.2549	.4358	-.4077	-.3795	1.4116	.5113	.5112	21.65
-2.00	.5301	-.4142	-.3172	.4075	.0688	-.1893	.5757	-.4020	-.3140	1.4182	.5130	.5130	21.67
.04	.8070	-.4030	-.2020	.6175	.0732	-.0743	.8024	-.3913	-.1989	1.4170	.5126	.5126	21.66
2.02	.9770	-.3805	-.1104	.7712	.0888	.0174	.9720	-.3691	-.1073	1.4168	.5124	.5124	21.66
4.00	1.1465	-.3464	-.0210	.9244	.1157	.1068	1.1410	-.3350	-.0178	1.4164	.5127	.5127	21.66
6.00	1.3415	-.2988	.0795	1.1035	.1553	.2073	1.3356	-.2875	.0826	1.4166	.5127	.5127	21.66
7.99	1.5289	-.2428	.1735	1.2752	.2028	.3014	1.5226	-.2317	.1767	1.4166	.5129	.5128	21.66
10.01	1.7271	-.1631	.2789	1.4584	.2724	.4065	1.7209	-.1531	.2818	1.4172	.5117	.5117	21.66
11.99	1.9123	-.0760	.3811	1.6276	.3517	.5092	1.9047	-.0646	.3845	1.4158	.5138	.5138	21.66
14.00	2.0975	.0272	.4912	1.7987	.4437	.6189	2.0901	.0375	.4943	1.4151	.5126	.5126	21.66
16.01	2.2472	.1379	.5766	1.9335	.5444	.7046	2.2390	.1486	.5800	1.4151	.5134	.5134	21.66
18.02	2.4126	.2642	.6722	2.0853	.6588	.8000	2.4045	.2740	.6754	1.4143	.5127	.5127	21.66
20.00	2.5700	.3966	.7765	2.2289	.7800	.9044	2.5612	.4064	.7798	1.4131	.5132	.5131	21.66
22.01	2.6837	.5323	.8725	2.3321	.9008	.9994	2.6773	.5391	.8748	1.4128	.5094	.5093	21.66
24.01	2.8013	.6814	.9744	2.4379	1.0365	1.1010	2.7955	.6871	.9765	1.4116	.5081	.5081	21.65
RUN = 670													
-3.67	.5902	-.7911	-.5094	.3043	.0742	-.2768	.5867	-.7804	-.5065	1.8024	.9113	.9112	21.96
-2.01	.7541	-.7825	-.4397	.4435	.0733	-.2073	.7506	-.7727	-.4370	1.8004	.9105	.9104	21.96
.00	.9667	-.7659	-.3388	.6250	.0814	-.1056	.9616	-.7532	-.3353	1.8007	.9136	.9136	21.96
2.01	1.1637	-.7346	-.2433	.7941	.0965	-.0111	1.1598	-.7258	-.2408	1.8004	.9097	.9097	21.96
4.02	1.3539	-.6932	-.1518	.9545	.1267	.0809	1.3486	-.6824	-.1488	1.8012	.9120	.9120	21.96
6.01	1.5800	-.6432	-.0423	1.1509	.1651	.1913	1.5729	-.6298	-.0384	1.8003	.9151	.9151	21.96
8.01	1.7737	-.5750	.0452	1.3175	.2162	.2783	1.7670	-.5635	.0486	1.7996	.9133	.9132	21.96
10.02	1.9766	-.4894	.1482	1.4940	.2837	.3808	1.9706	-.4797	.1511	1.8012	.9115	.9114	21.96
12.00	2.1774	-.3915	.2556	1.6678	.3651	.4884	2.1706	-.3814	.2587	1.8014	.9122	.9121	21.96
14.00	2.3715	-.2802	.3635	1.8365	.4573	.5960	2.3650	-.2712	.3663	1.7998	.9112	.9111	21.96
16.00	2.5459	-.1499	.4595	1.9872	.5663	.6914	2.5408	-.1433	.4616	1.8010	.9084	.9084	21.96
18.02	2.7209	-.0186	.5520	2.1367	.6782	.7841	2.7149	-.0114	.5544	1.7991	.9093	.9093	21.96
19.99	2.9073	.1288	.6611	2.2964	.8085	.8944	2.8980	.1392	.6647	1.7997	.9139	.9139	21.96
22.00	3.0581	.2830	.7683	2.4249	.9397	1.0011	3.0496	.2918	.7714	1.8028	.9122	.9122	21.96
24.00	3.1834	.4443	.8654	2.5262	1.0800	1.0988	3.1731	.4543	.8691	1.8048	.9143	.9143	21.95

TABLE 5.- CONCLUDED.

VEO-WING 1/10-SCALE RESEARCH MODEL, VSTOL TEST NO. 204

ALPHA	CL	CD	CPM	CLE2	CDE2	CME2	CLCT	CDCT	CMCT	NPR	CT	CTRF	THETAJ
RUN = 671													
-3.63	.7795	-1.3728	-.6992	.3017	.0535	-.3054	.7782	-1.3688	-.6981	2.4307	1.5043	1.5043	22.15
-2.01	.9923	-1.3653	-.6098	.4742	.0464	-.2160	.9910	-1.3618	-.6088	2.4274	1.5037	1.5037	22.16
.01	1.2016	-1.3250	-.5162	.6383	.0572	-.1253	1.2044	-1.3319	-.5181	2.4255	1.4926	1.4926	22.16
1.99	1.4263	-1.3013	-.4274	.8101	.0731	-.0330	1.4237	-1.2956	-.4258	2.4287	1.5062	1.5062	22.16
4.01	1.6501	-1.2357	-.3180	.9886	.1113	.0749	1.6498	-1.2351	-.3178	2.4368	1.5007	1.5007	22.15
5.99	1.8581	-1.1777	-.2347	1.1508	.1444	.1579	1.8584	-1.1782	-.2348	2.4288	1.4994	1.4994	22.16
7.99	2.1182	-1.0996	-.1242	1.3639	.1992	.2691	2.1172	-1.0979	-.1236	2.4299	1.5020	1.5020	22.16
10.00	2.3629	-1.0023	-.0148	1.5627	.2706	.3789	2.3610	-.9993	-.0139	2.4292	1.5035	1.5035	22.16
11.99	2.5538	-.8859	.0798	1.7090	.3602	.4739	2.5507	-.8814	.0812	2.4365	1.5055	1.5055	22.15
13.99	2.7619	-.7635	.1992	1.8787	.4459	.5812	2.7634	-.7655	.1885	2.4299	1.4975	1.4975	22.16
16.00	2.9571	-.6194	.2854	2.0287	.5629	.6790	2.9551	-.6168	.2863	2.4376	1.5034	1.5034	22.15
17.99	3.1622	-.4646	.3822	2.1999	.6762	.7730	3.1670	-.4703	.3803	2.4258	1.4925	1.4925	22.16
20.00	3.3675	-.3032	.4834	2.3537	.8171	.8789	3.3602	-.2951	.4862	2.4369	1.5109	1.5109	22.15
22.00	3.5218	-.1225	.5831	2.4833	.9468	.9734	3.5284	-.1293	.5806	2.4257	1.4906	1.4906	22.16
24.00	3.6903	.0593	.6926	2.6038	1.1032	1.0871	3.6855	.0640	.6944	2.4368	1.5067	1.5067	22.15
RUN = 672													
-3.62	.8597	-1.9082	-.7774	.2695	.0401	-.2639	.8494	-1.8739	-.7683	2.9891	2.0350	2.0357	20.47
-2.01	1.0296	-1.8864	-.7158	.3865	.0385	-.2038	1.0203	-1.8584	-.7083	2.9863	2.0296	2.0295	20.48
-.02	1.2741	-1.8613	-.6241	.5632	.0442	-.1110	1.2622	-1.8296	-.6156	2.9867	2.0339	2.0338	20.48
2.00	1.5178	-1.8105	-.5250	.7435	.0598	-.0142	1.5085	-1.7881	-.5189	2.9825	2.0242	2.0242	20.49
4.00	1.7925	-1.7623	-.4113	.9459	.1017	.1045	1.7729	-1.7192	-.3994	3.0001	2.0473	2.0473	20.42
6.01	2.0303	-1.6868	-.3111	1.1263	.1278	.2002	2.0181	-1.6623	-.3042	2.9899	2.0274	2.0273	20.47
8.00	2.2898	-1.6010	-.2120	1.3227	.1825	.2997	2.2760	-1.5756	-.2047	2.9893	2.0289	2.0289	20.47
9.99	2.5361	-1.4959	-.1126	1.5101	.2475	.3977	2.5244	-1.4761	-.1069	2.9859	2.0229	2.0229	20.48
12.00	2.7770	-1.3692	.0013	1.6890	.3441	.5125	2.7611	-1.3443	.0088	3.0014	2.0296	2.0296	20.42
14.00	2.9996	-1.2404	.1047	1.8552	.4272	.6147	2.9868	-1.2218	.1104	2.9910	2.0226	2.0226	20.46
16.00	3.2142	-1.0904	.2047	2.0066	.5465	.7171	3.1939	-1.0629	.2133	3.0014	2.0342	2.0342	20.42
17.98	3.4443	-.9282	.2989	2.1861	.6558	.8093	3.4300	-.9102	.3047	2.9867	2.0230	2.0229	20.48
19.99	3.6592	-.7492	.4021	2.3459	.8049	.9162	3.6425	-.7179	.4125	3.0015	2.0411	2.0411	20.42
22.02	3.8725	-.5568	.5082	2.5029	.9386	1.0197	3.8537	-.5362	.5153	2.9896	2.0279	2.0279	20.47
24.00	4.0394	-.3702	.6074	2.6068	1.0917	1.1230	4.0066	-.3368	.6192	3.0008	2.0468	2.0468	20.42
RUN = 673													
8.00	1.1171	.1909	.3139	1.1171	.1909	.3139	1.1171	.1909	.3139	1.0000	0.0000	0.0000	0.00
8.01	1.2235	.0992	.2723	1.1698	.1883	.2976	1.2214	.1026	.2733	1.0674	.1040	.1040	23.07
8.00	1.3312	.0097	.2313	1.2265	.1874	.2807	1.3281	.0150	.2328	1.1507	.2062	.2062	22.51
7.99	1.4565	-.1464	.1735	1.2532	.2101	.2743	1.4513	-.1373	.1761	1.3246	.4105	.4105	21.71
7.99	1.7155	-.4735	.0739	1.3156	.2201	.2776	1.7151	-.4729	.0741	1.6902	.8007	.8007	21.97
8.01	2.1701	-1.1589	-.1565	1.3750	.2185	.2588	2.1749	-1.1672	-.1590	2.5336	1.5904	1.5904	21.98
8.00	2.2868	-1.5876	-.2137	1.3201	.1950	.2928	2.2735	-1.5631	-.2117	2.9887	2.0279	2.0278	20.47
7.99	2.8676	-2.6289	-.5145	1.4273	.2933	.2482	2.8419	-2.5768	-.5010	3.3744	3.2581	3.2578	18.24
7.99	3.6579	-4.0604	-.8953	1.4891	.3142	.2536	3.6654	-4.0755	-.8992	3.3524	4.8831	4.8827	18.38
14.00	2.9996	-1.2404	.1047	1.8552	.4272	.6147	2.9868	-1.2218	.1104	2.9910	2.0226	2.0226	20.46

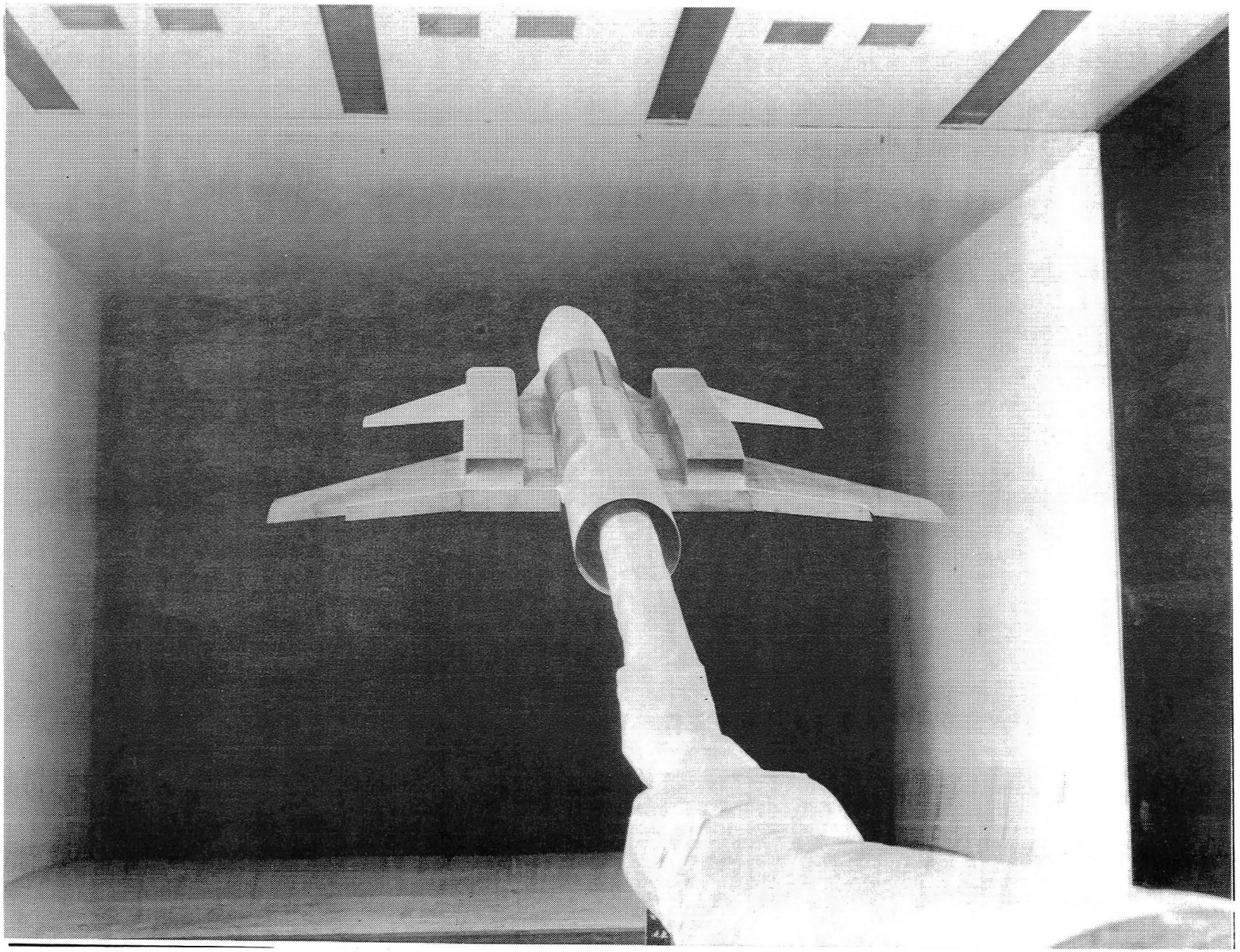

Figure 1.- Rear view of vectored-engine-over wing model installed in the 4- by 7-Meter Tunnel.

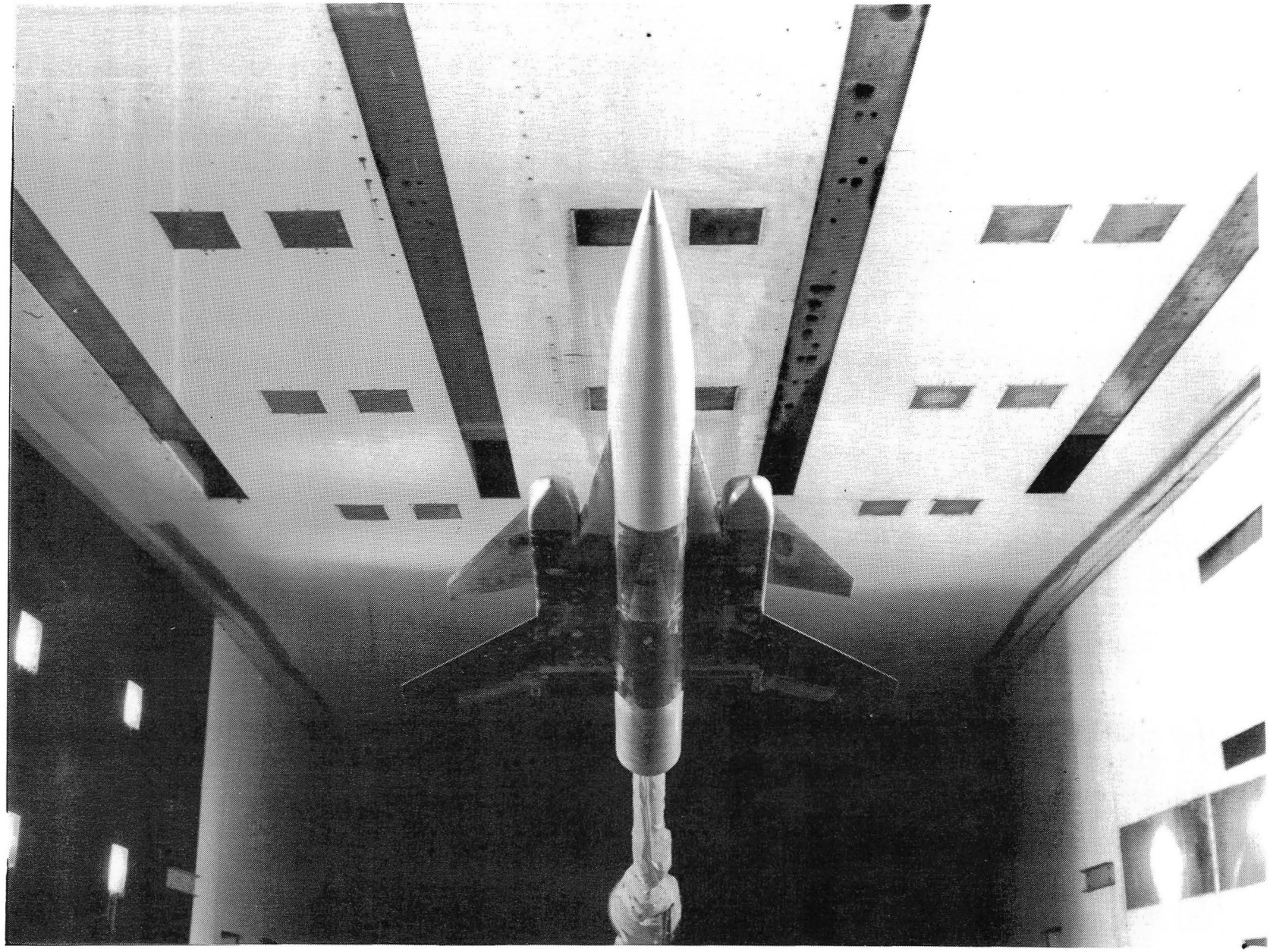

Figure 2.- Bottom view of vectored-engine-over wing model installed in the 4- by 7-Meter Tunnel.

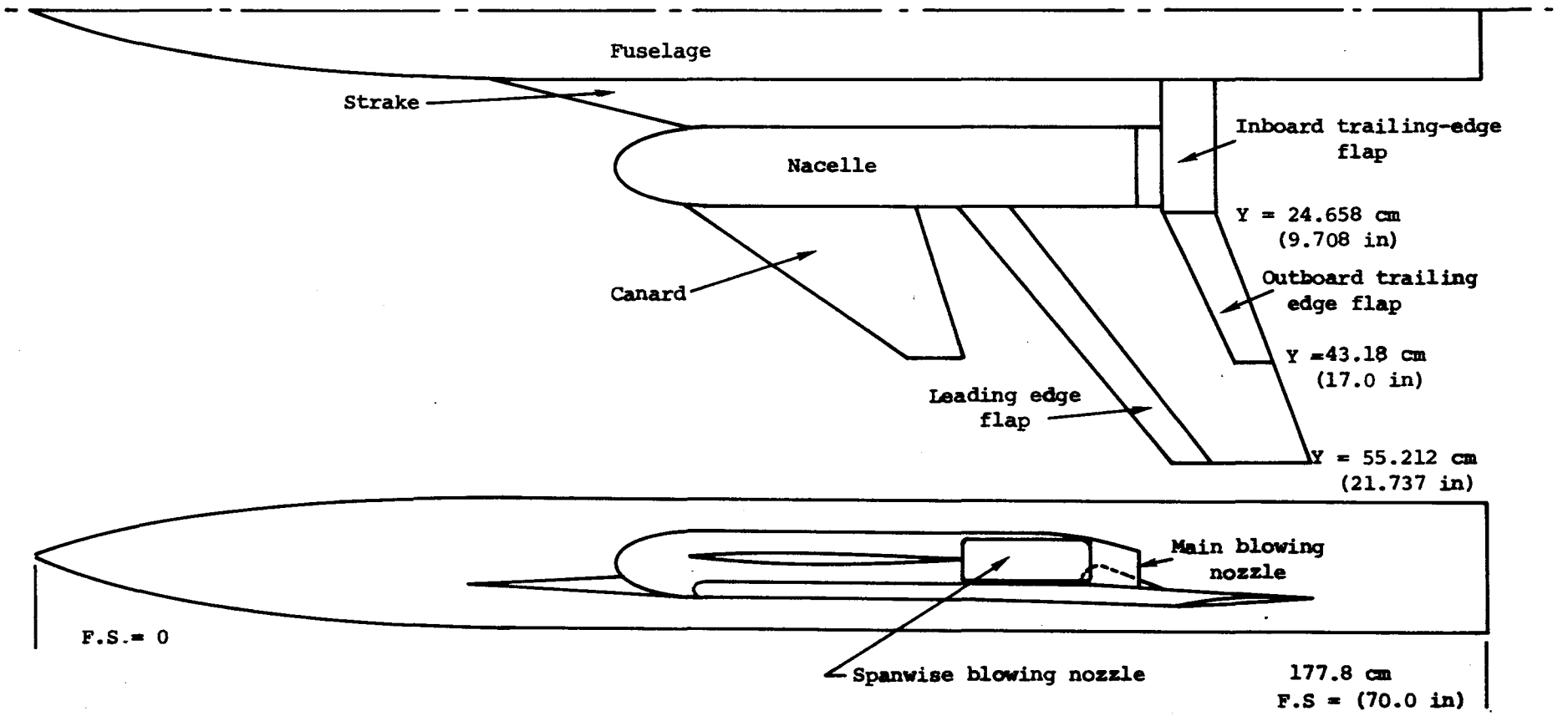

Figure 3. Sketch of VEO wing model configuration

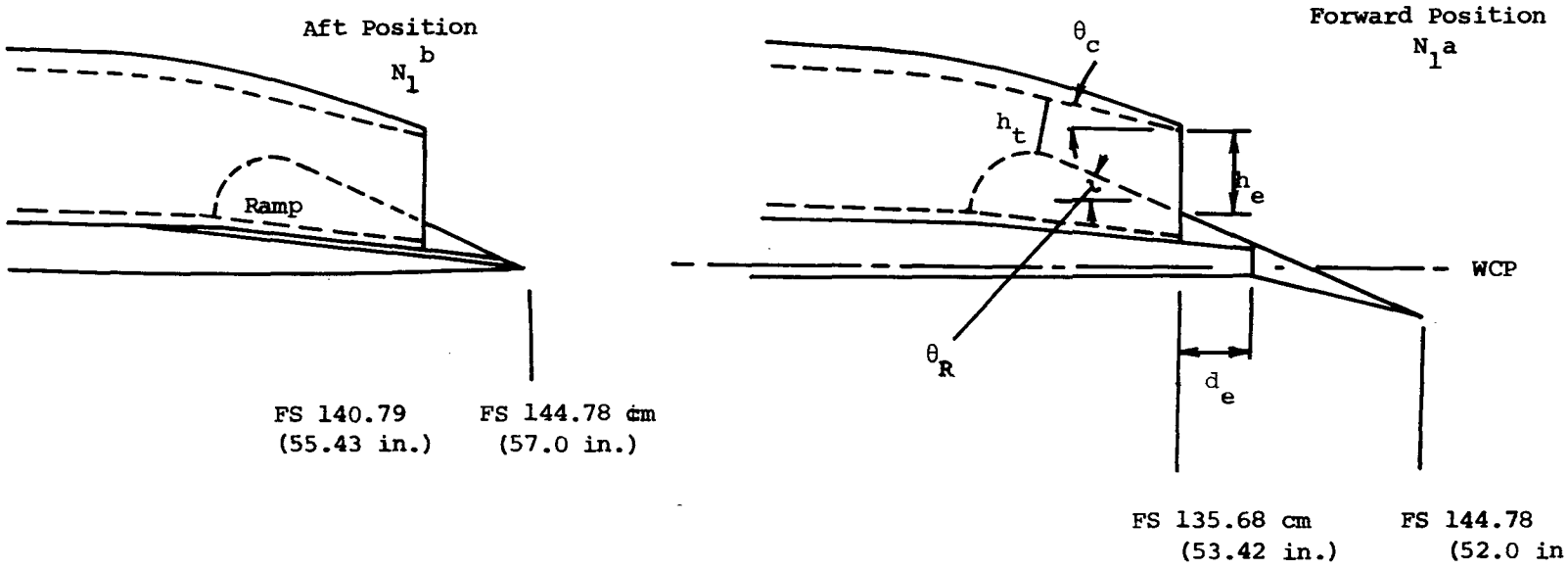

Ramp	A_t cm^2/side (in.^{2}/side)	A_e cm^2/side (in.^{2}/side)	h_t cm (in.)	h_e cm (in.)	d_e cm (in.)	θ_c deg	θ_R deg	Remarks
a	23.129 (3.585)	31.148 (4.828)	2.39 (0.94)	3.23 (1.27)	2.79 (1.1)	10	20	no spanwise blowing
f	24.839 (3.585)	27.464 (4.257)	2.39 (0.94)	2.84 (1.12)	2.79 (1.1)	10	25	no spanwise blowing
b	19.903 (3.085)	30.064 (4.660)	2.06 (0.81)	3.10 (1.22)	2.79 (1.1)	10	22	no spanwise blowing .5 in.^{2}
c	16.794 (2.603)	24.335 (3.772)	1.73 (0.68)	2.51 (0.99)	2.79 (1.1)	10	25	no spanwise blowing 1.0 in.^{2}

Figure 4. N_1 nozzle geometry

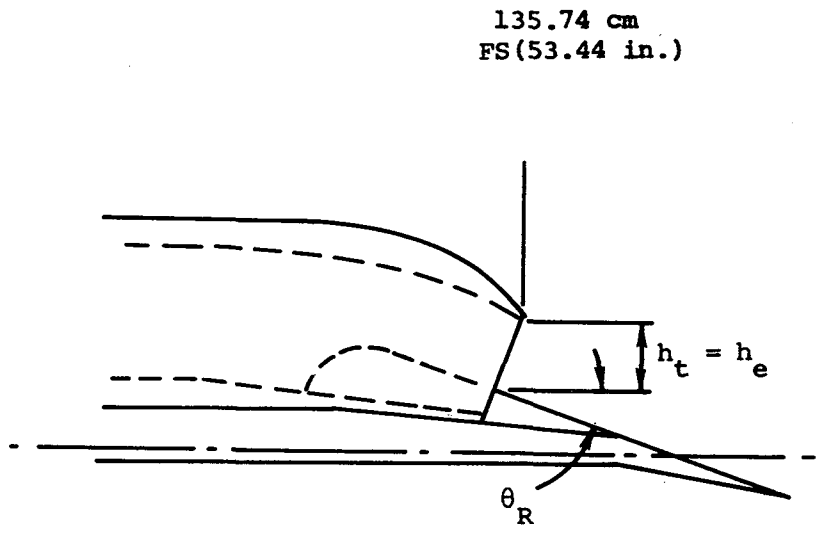

A_t cm^2/side (in.^{2}/side)	A_e cm^2/side (in.^{2}/side)	h_t cm (in.)	h_e cm (in.)	θ_R
22.903 (3.55)	22.903 (3.55)	2.365 (0.931)	2.365 (0.931)	20

Figure 5. N_{13} nozzle geometry

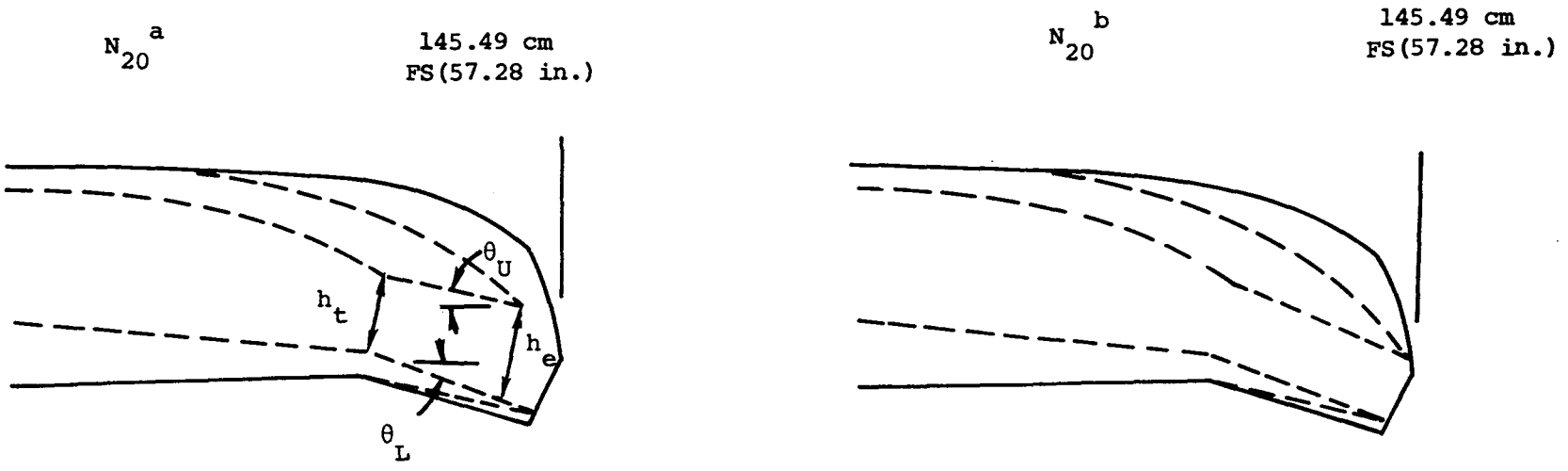

Cowl	A_t cm^2/side ($in.^2$/side)	A_e cm^2/side ($in.^2$/side	h_t cm (in.)	h_e cm (in.)	θ_U deg	θ_L deg
a	23.187 (3.594)	31.052 (4.813)	2.395 (0.943)	3.213 (1.265)	14.75	20.28
b	23.187 (3.594)	24.303 (3.767)	2.395 (0.943)	2.515 (0.990)	20.95	20.28

Figure 6. N_{20} nozzle geometry

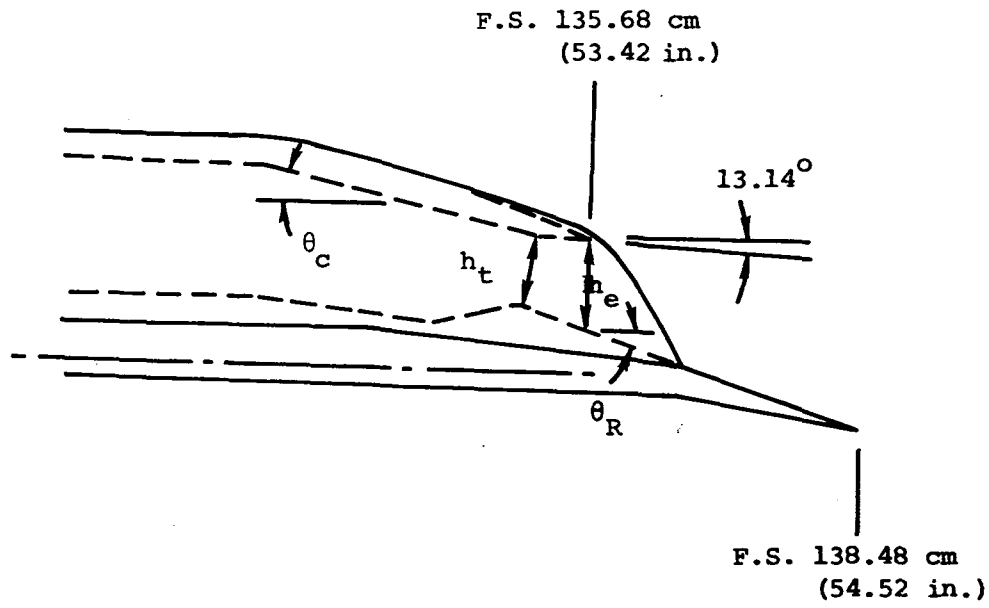

A_t cm^2/side (in^2/side)	A_e cm^2/side (in^2/side)	h_t cm (in.)	h_e cm (in.)	θ_c, deg	θ_r, deg
22.645 (3.51)	27.006 (4.186)	2.349 (0.925)	2.794 (1.100)	4.17	20

Figure 7.- N_{22} nozzle geometry.

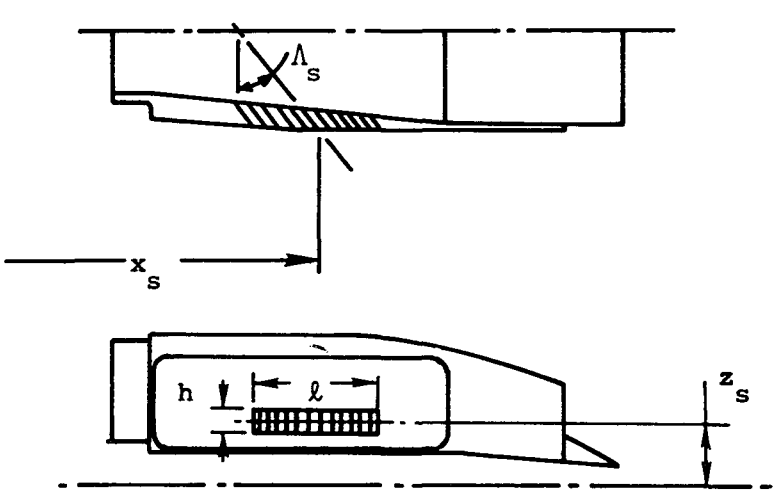

Flush nozzles

N_{11} and N_{21}

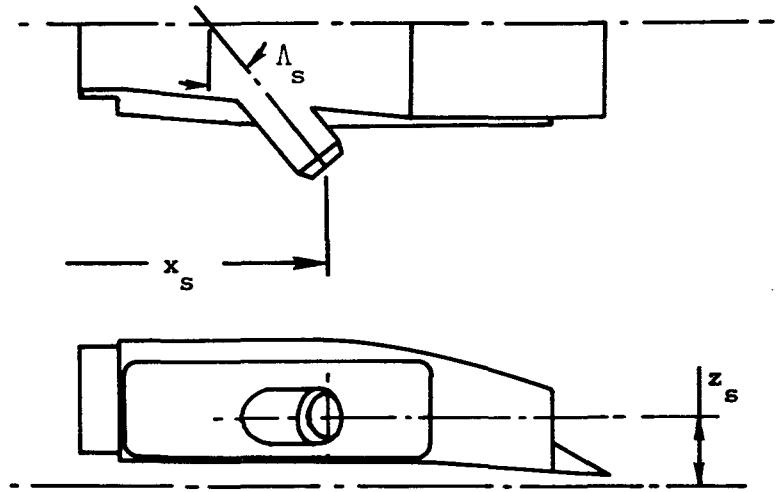

Round nozzle

N_4 and N_{4a}

Spanwise nozzle	A_s cm^2/side (in^2/side)	ℓ cm (in.)	h cm (in.)	x_s cm (in.)	z_s cm (in.)	Λ_s, deg
N_4	6.493 (1.0064)	—	—	123.83 (48.75)	4.191 (1.65)	40
N_{4a}	3.252 (0.504)	—	—	122.30 (48.15)	4.191 (1.65)	40
N_{11}	6.942 (1.076)	5.461 (2.15)	1.270 (0.50)	122.30 (48.15)	4.191 (1.65)	40
N_{21}	6.710 (1.040)	10.566 (4.16)	1.270 (0.50)	122.30 (48.15)	4.191 (1.65)	60

Figure 8.- Spanwise nozzle geometry.

1. Report No.	2. Government Accession No.	3. Recipient's Catalog No.
TM83263		

4. Title and Subtitle	5. Report Date
Wind-Tunnel Investigation of the Powered Low-Speed Longitudinal Aerodynamics of the Vectored-Engine-Over (VEO) Wing Fighter Configuration	February 1982
	6. Performing Organization Code 505-43-23-04
7. Author(s) John W. Paulson, Perry D. Whitten, and Stephen C. Stumpfl	8. Performing Organization Report No.
	10. Work Unit No.
9. Performing Organization Name and Address Langley Research Center Hampton, Virginia 23665	11. Contract or Grant No.
	13. Type of Report and Period Covered Technical Memorandum
12. Sponsoring Agency Name and Address National Aeronautics and Space Administration Washington, DC 20546	14. Sponsoring Agency Code

15. Supplementary Notes

Mr. Whitten works with General Dynamics Corporation, Ft. Worth Division. Mr. Stumpfl for the U.S. Air Force Wright Aeronautical Laboratories, Wright-Patterson Air Force Base, Ohio

16. Abstract

A wind-tunnel investigation incorporating both static and wind-on testing has been conducted in the Langley 4- by 7-Meter Tunnel to determine the effects of vectored thrust along with spanwise blowing on the low-speed aerodynamics of an advanced fighter configuration. Data were obtained over a large range of thrust coefficients corresponding to takeoff and landing thrust settings for many nozzle configurations. This report presents the complete set of static thrust data and the complete set of longitudinal aerodynamic data obtained in this investigation. These data are intended for reference purposes and, therefore, are presented here without analysis or comment. The analysis of the thrust-induced effects found in this investigation are not discussed in this report.

17. Key Words (Suggested by Author(s))	18. Distribution Statement
Thrust-induced effects Vectored-engine-over the wing Low-speed aerodynamics	Unclassified-Unlimited

19. Security Classif. (of this report)	20. Security Classif. (of this page)	21. No. of Pages	22. Price
Unclassified	Unclassified	272	A12

N-305

For sale by the National Technical Information Service, Springfield, Virginia 22161

LIBRARY
185