3 1176 00159 6320

NASA CR-166,322

NASA CONTRACTOR REPORT 166322

NASA-CR-166322
19820014370

Conceptual Design Study of A Visual System for A Rotorcraft Simulator And Some Advances In Platform Motion Utilization

FOR REFERENCE

NOT TO BE TAKEN FROM THIS ROOM

John B. Sinacori

LIBRARY COPY

APR 22 1982

LANGLEY RESEARCH CENTER
LIBRARY, NASA
HAMPTON, VIRGINIA

CONTRACT NAS2-10278
August 1980

NASA

NF02320

U.S. ARMY AVRADCOM

NASA CONTRACTOR REPORT 166322

Conceptual Design Study of A Visual System for A Rotorcraft Simulator And Some Advances In Platform Motion Utilization

John B. Sinacori
J. B. Sinacori Associates
P. O. Box 1043
Hollister, California 95023

Prepared for
Ames Research Center
under Contract NAS2-10278

National Aeronautics and
Space Administration

Ames Research Center
Moffett Field, California 94035

United States Army
Aviation Research and
Development Command
Research and Technology
Laboratory
Moffett Field, California 94035

N82-22244

TABLE OF CONTENTS

		Page
1.0	INTRODUCTION	1
2.0	BACKGROUND AND BASIC REQUIREMENTS	2
3.0	VISUAL SYSTEM ELEMENTS	5
3.1	Interpretation of Basic Requirements in Hardware Terms	5
3.2	Preliminary Concept Definition	9
3.3	Head and Eye Movements During Flight	10
3.4	Concept Deliberation	12
3.5	Preferred Approach	16
3.6	The Optical Relay	19
3.7	Summary of the Preferred Approach	22
4.0	SOME ADVANCES IN MOTION PLATFORM IMPLEMENTATION	24
5.0	RECOMMENDED RESEARCH	26
REFERENCES		27

LIST OF FIGURES

FIGURE	TITLE	PAGE
1	Rotorcraft Pilot Fixation Envelope	2.1
2	The Instantaneous Field-of-View of the Human and the Area-of-Interest Field-of-View	9.1
3	Summary of Image Generation Parameters	12.1
4	Preferred Approach Schematic	17.1
5	Optical Relay Movements	19.1
6	Optical Relay Options	20.1
7	Possible Projection Head Geometry	21.1
8	Three-post Motion Platform Geometry and Limits	25.1
9	Variable-Limit Braking Scheme	25.2
10	Braking Time History	25.3

LIST OF TABLES

TABLE	TITLE	PAGE
1	Preferred Approach Properties	23.1

1.0 INTRODUCTION

A conceptual design effort was performed whose purpose was to define ideas for the visual and motion cueing elements of a rotorcraft flight simulator to be used for rotorcraft development. The level of detail reached was sufficient to permit some technology assessments for the critical elements. The ideas are the result of an assessment of many configurations and are intended to be a stimulus for those who might undertake the detailed design and fabrication of such a simulator.

Some issues were discovered during the study that raised several important research questions. The corresponding research topics were developed and an outline of them is included in this report.

2.0 BACKGROUND AND BASIC REQUIREMENTS

Rotorcraft operate in a wide variety of environmental conditions. Among the more difficult of these to simulate are the low-level mission phases that include nap-of-the-earth (NOE) flight as conducted by the Army's airmobile units. The reason for this is that the terrain is used for cover and as such, the rotorcraft is flown as close to masking objects as possible resulting in an intense continuous collision avoidance task. The necessity to maintain as high a speed as possible makes the already difficult dynamic task one that presses the pilot and the machine to near their performance limits. For a rotorcraft simulator designed for research into flight dynamics or crew integration, it is logical to expect a desire to increase pilot and rotorcraft performance beyond present-day levels, particularly if the spectre of air-to-air combat is raised.

The basic requirements that result from the above are formidable from the viewpoint of a simulator designer so they will be clearly stated before proceeding.

1. BASIC VISUAL REQUIREMENTS

Rotorcraft pilots are likely to fixate on objects in the visual field lying within the solid angle defined by a sphere less the solid angles of two circles lying in the sphere surface. The first circle has a diameter of 120 degrees and its center lies on the line pointing backwards relative to rotorcraft axes while the second circle is also placed in the sphere's surface, but has a diameter of 60 degrees and its center lying directly below. The remaining solid angle is shown in Figure 1. The size of this solid angle is 8.58 steradians and represents a field size of approximately 68% of a full field-of-view.

FIGURE 1 ROTORCRAFT PILOT FIXATION ENVELOPE.

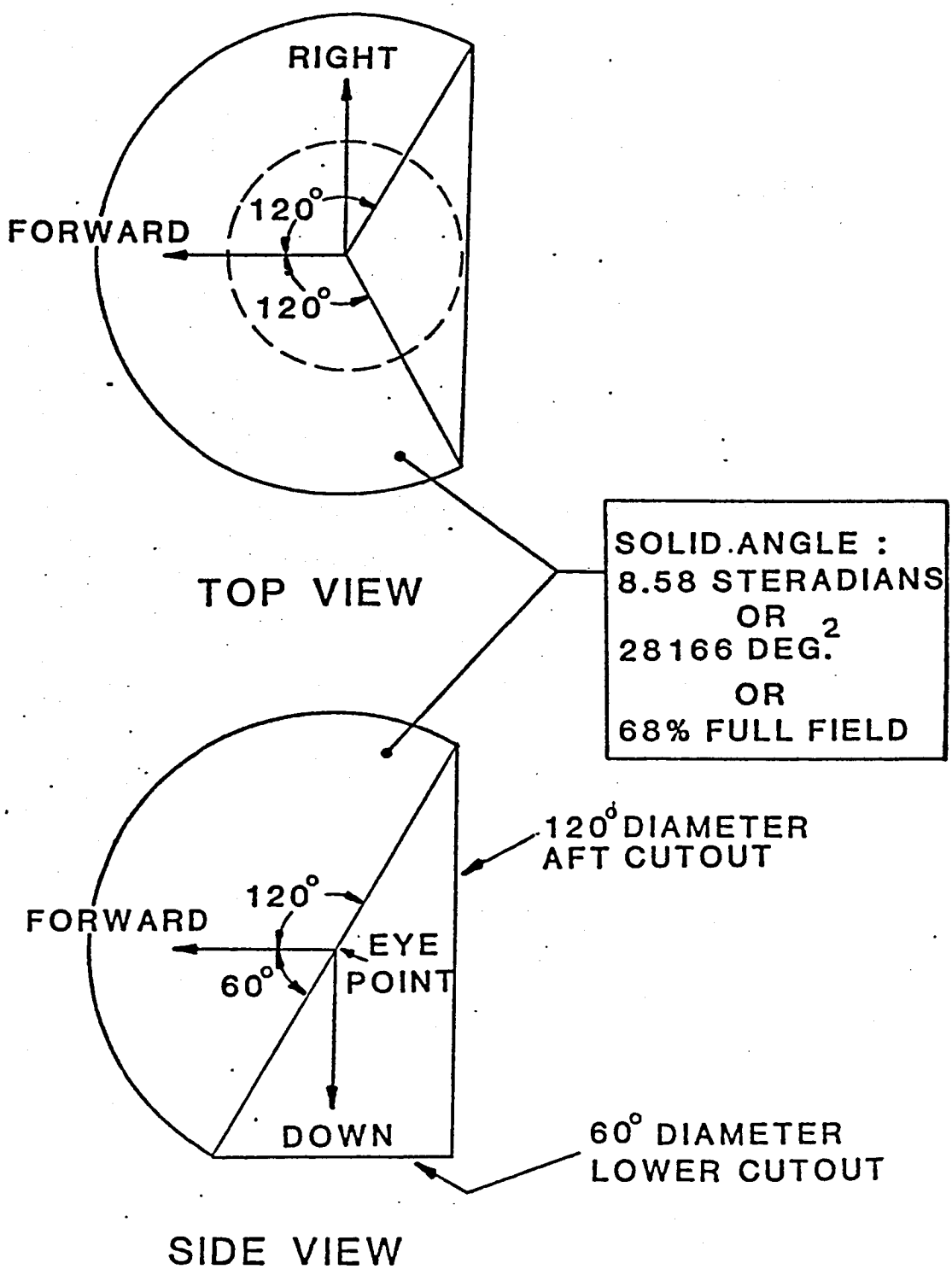

More fixations can be expected to occur in the forward regions of the field-of-view, naturally, because that region encompasses objects usually being approached. During air-to-air combat, evasion of attacking weapons or hover and landing, more fixations will occur near the aft and downward boundaries previously described. While a specific rotorcraft cockpit structure will tend to somewhat restrict fixations, the boundaries stated are believed to represent the maximum envelope of fixations expected during rotorcraft simulation of a wide variety of military and civil missions.

The scene contained within the field-of-view described will be very rich in the sense that there will be many objects that may or may not be visible depending on the ambient lighting and weather conditions. There are many objects in a natural scene that may or may not be used by the rotorcraft pilot in negotiating a desired course. Wooded, rolling hills, stream beds and rivers with surrounding forest, and canyons are the most likely areas where terrain flight will be conducted. Such areas contain trees, grasses, shrubs, and rock formations that are rich in detail. The most likely worst case from the simulator designer's viewpoint is the task of flying down a densely wooded box canyon and when reaching its end, crossing the wooded ridge line into the neighboring canyon only to find a hostile weapon that requires a quick return to the first canyon. While many objects will be visible during the approach to the end of the box canyon, the unmasking at the ridge will reveal many more objects in the next and neighboring canyons.

2. BASIC MOTION REQUIREMENTS

The maneuvers required for the mission phase just described encompass rapid, large attitude and translational movements that, from the simulator designer's viewpoint, will require a motion cueing device in order to permit the pilot and rotorcraft to reach their peak performance. This is simply stating that the pilot must be able to precisely effect the fastest possible changes in attitude and translation considering the effects of handling qualities, turbulence, weapon firing, and visual capability.

The worst case again emerges for good visibility daylight conditions where the richness of scene detail will permit the pilot to reach his peak performance.

3. BASIC COCKPIT REQUIREMENTS

The research and development environment will require the cockpit flexibility that permits rapid configuration changes. The need to research crew integration, however, will require the ability to place two crewmen in close proximity to each other. This, in turn, requires that the primary crewman (pilot) receive the high-quality visual information and also that enough visual information be provided the second crewman (gunner/navigator, etc.) that he perceives enough of their surroundings to at least effectively "prompt" or instruct the pilot.

3.0 VISUAL SYSTEM ELEMENTS

3.1 INTERPRETATION OF BASIC REQUIREMENTS IN HARDWARE TERMS

A large field-of-view size is implied by Figure 1. For the worst case of traversing a canyon and crossing a ridge line, it is conceivable that at least the lower half of this field-of-view will be filled with highly-detailed trees, shrubs, and rock formations. If one knew the answers to three questions, a conceptual design could easily begin. They are:

1. How much visual information is contained within the field-of-view for the worst case environment?
2. How much of this visual information is required to permit real world-like maneuvering performance?
3. How does the required visual information relate to image generation and presentation hardware performance?

An attempt to answer these questions has been made using the following techniques:

1. The application of objective scene content measures to artificially generated and real-world imagery.
2. Using these data with flight dynamics notions to form judgements of what is needed.
3. Relating the objective measures to visual hardware performance.

These are described in the following:

3.1.1 OBJECTIVE SCENE CONTENT MEASURES

A variety of metrics are used by the digital image processing industry to help design reconnaissance hardware. These metrics as used by this industry do attempt to describe properties of imagery that can be used to detect targets, for example. The metrics range from complex Fourier-analysis-based measures that require sophisticated measurement hardware or processing software, to more simple ones that may even be measured manually.

The focus of this study was on the measures of the latter group. Of

these, the thresholded luminance transition count per solid angle was found attractive for several reasons. First, it linearly varies with the number of objects in a scene. Second, it is sensitive to both objects and texture. Third, it can be used to classify objects. Fourth, it can be applied to narrow scan "line", portions of a scene, or the whole scene contained within a field-of-view. Fifth, it bears a direct relationship to computer image generators' performance. Sixth, it is limited by the imaging system resolution. Seventh, it can be measured either by automated or simpler manual means.

The measure is taken by sectioning a visual scene into a smaller solid angle, usually square-appearing. Scans are then made in two orthogonal directions across the solid angle. Along each scan, the number of luminance transitions above a given threshold are counted and the average of each scan direction is taken. The measure is then simply the square root of the product of the two scan direction averages. The resolution of the system that produces the image will limit the maximum count that can be measured. For example, a resolution of one arc-minute per optical line pair will limit the transition count along a narrow (one arc-minute wide) scan "line" or strip to 60 per degree of strip length. For comparison sake, this is the value for images produced by high-quality photographic and printing methods. Instant cameras have a maximum or best resolution of 3 arc-minutes and a corresponding limiting count of 20 per degree. Television camera/model and computer image generators for flight simulators have resolutions of 9 and 3 arc-minutes, respectively, with corresponding count limits of 6.7 and 20 per degree, respectively.

To gain insights into what comprises a "rich, natural scene," a series of high-resolution (one arc-minute) photographs of natural scenes and some natural scenes themselves were manually scanned. The photographs were scanned from a distance that made them appear the correct size. The results showed the luminance transition count for a strip or "line" is a fraction of the resolution-limited value. For the photographs and natural areas examined, the count rarely exceeded 4-8 per degree where the limit was 40-60 per degree. Moving closer to the natural objects (oak trees and grass) did not appreciably change the values.

The conclusion that may be drawn from these preliminary results is that natural wooded scenes are comprised of maximum content levels of 4-8 lumi-

nance transitions per degree of scan and that this level is independent of viewing distance.

Further examination of the natural areas revealed that trees' images were made up of "patches" of light formed by whole branches. From a longer range, the patches appeared to be larger, presumably due to the reduced contrast, thus, yielding nearly the same count.

In order to relate these results to visual system performance, a series of scans were made of photographs of a modelboard containing various numbers of simple objects such as unoccluded blocks. The scan counts measured showed a linear relation to the number of blocks in the photograph. The values asymptoted to maximum levels when the number of scans per object exceeded two. Also, it is easy to demonstrate that half the square of the transition count taken over a solid angle will approximate the number of patch boundaries in the solid angle provided it is completely filled with the patches.

For occluded objects the count is, naturally, reduced to a value corresponding to only the nearest objects.

What do these results mean? The fact that a measure exists that is proportional to the number of edges, face boundaries patches, visible faces, etc., may hold the key to relating real-world scenes (or photographs of them) to visual image generation performance.

If a computer image generator data base were to be constructed of a brushy canyon area suitable for NOE operations, conceivably this data base could be formed of a U-shaped structure covered with brush and tree features. From a pilot's viewpoint, while traversing this canyon, the hillsides would be seen at oblique angles such that little occluding of objects would occur. If we assume a "rich" natural scene comprised of six luminance transitions per degree of linear scan, or assuming a two-dimensional scan average of six per square degree, the total number of transitions in half of the 8.58 steradian (28,166 deg^2) is $28166 \times 0.5 \times 6 = 84500$! If the scene were made up of patch boundaries outlining shrubs and tree branches, the total number of face boundaries would be $((6)^2/2) \times 28166 \times 0.5$ or 254,000! If each patch boundary is formed by a four-sided polygon, the total number of unoccluded edges is one million! It must be remembered that some occlusion is inevitable in constructing a data base and that provisions to include neighboring canyons

for traversing ridge lines must be present. These factors will tend to increase the number of edges and polygons required.

The next question is: Are these levels of scene content required for effective simulation? Probably not. Scans of hilly areas devoid of trees and shrubs yield transition counts slightly less than the values previously described, however, values for snow-covered and sandy desert areas are one to two orders of magnitude smaller. Since it is known that flight over such areas poses some difficulty for pilots when attempting to maintain minimum altitudes and obstacle clearances, a prudent judgement for the required average luminance transition count per square degree is 1/10 of the maximum value of 8 described earlier, or 0.8. With this value, the total number of transitions required would be at least 28,166 x 0.5 x 0.8 = 11266. The corresponding number of patch boundaries (polygons) needed would be $((0.8)^2/2) \times 28166 \times 0.5 = 4507$ and for four edges per polygon, the total number of edges would need to be 4 x 4507 = 18028! For reference sake, this is the value for a checkerboard pattern where each square side is approximately 1/2 degree wide. Another question is concerned with how this requirement interpretation relates to visual hardware concepts. This will be taken up next.

An estimate has been made of the minimum number of edges and polygons required in an 8.58 steradian field-of-view for effective NOE simulation. These values are about 4500 polygons and 18,000 edges, and correspond to approximatley 1/10 of the content of rich natural scenes. These values could be lowered if less content can be accepted, but will be certainly increased due to the necessity of including neighboring regions, and occlusion. These values are a resonable starting point for purposes of defining system parameters and preliminary concepts.

The cost of CGI systems is roughly $500 per "advertised" edge or edge equivalent for a solid angle coverage of 2 steradians or 17% of full field. Due to edge crossings per scan line limitations, the "displayed" edge capacity is usually much less, on the order of 2-3000 over the same field-of-view.

An assessment of this technology has resulted in the judgement that in the near future (3 years or less) the technology will not produce systems with more than a 12000 advertised edge capacity for a cost of $400 to $500 per edge. This suggests that the cost of an 8.58 steradian image generator

alone capable of providing about 18000 edges may easily reach nine million dollars. This means that the requirements as set forth, thus far, are ridiculously impractical and that other ways of accomplishing the simulation need to be examined.

3.2 PRELIMINARY CONCEPT DEFINITION

If the properties of the human visual sense are considered, there may be ways of accomplishing effective NOE simulation without the cost and complexity implied by the basic requirements as set forth above. The properties that appear most important are the limited instantaneous field-of-view of the human and the fact that we see objects differently depending on where we gaze or fixate relative to the object.

The instantaneous field-of-view of the human, as limited by the skull, is shown in Figure 2. This field size is roughly equivalent to that of an ellipse-shaped field-of-view whose major and minor diameters are 180° and 120°, respectively. This corresponds to a solid angle of about 5 steradians or 40% of a full field.

If this field-of-view could be maintained directly before the pilot's face, it probably could be made smaller without appreciably affecting the pilot's ability to maneuver his rotorcraft in tight places. The effect would be similar to that when wearing ski goggles. A reasonable choice would be to draw in the boundary by 15 degrees. The remaining field would be 150 degrees by 90 degrees and would comprise a solid angle of 3.2 steradians or 26 percent of a full field.

It is well known that human visual acuity, and hence resolution, is dependent on where the image being scrutinized falls on the retina. For example, the use of the foveal region results in a resolution of about one arc-minute. However, the resolution, when using the parafoveal region at an eccentricity (angular distance from the fovea) of 25 degrees, is 1/10 the foveal value or 10 arc-minutes.

If a head-directed field-of-view format could be divided into a high image density central field with two low image density peripheral fields, the total image content required may turn out to be practical.

If we assume that the 26% full field solid angle is formed by a central field of 11% full field with two peripheral fields of 7.5 percent each, we may re-estimate the total image content required. First, let us assume

FIGURE 2 THE INSTANTANEOUS FIELD-OF-VIEW OF THE HUMAN AND THE AREA-OF-INTEREST FIELD-OF-VIEW

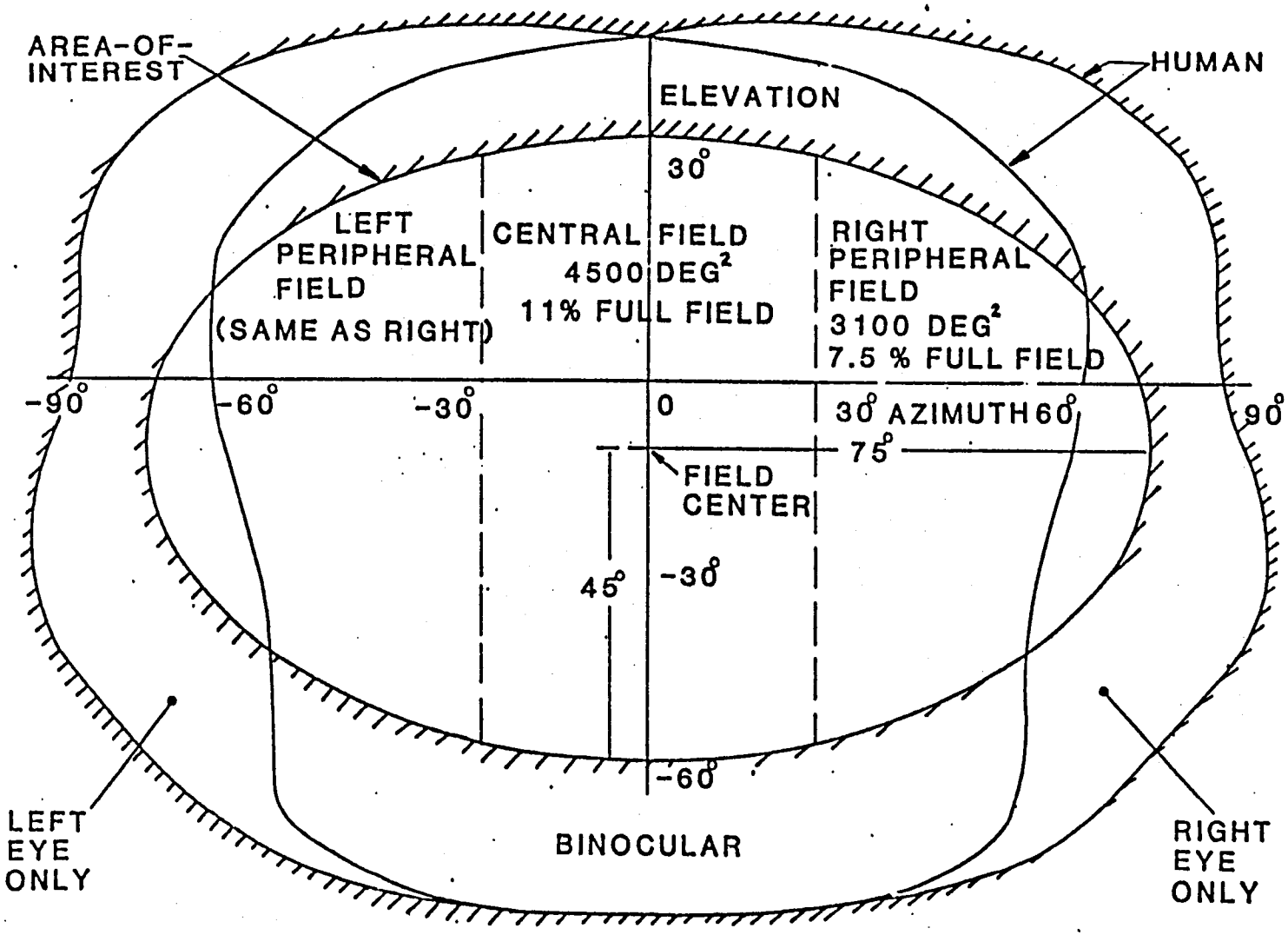

that the luminance transition density in the central field is as before; 0.8 per square degree of solid angle and that it is .08 in the two peripheral fields. The size of the central field is 90° by 50° with a solid angle of 4500 square degrees. The number of polygons required would be 1440 and the number of edges is 5760. The two peripheral fields encompass a solid angle each of 3100 square degrees and at an image density of 0.08 transitions per square degree would require $((.08)^2/2) \times 3100 = 10$ polygons each or 40 edges for a total of 20 polygons and 80 edges. The total for the three fields is 5760 + 80 = 5840! Although the fields described are not optimized, the result of their use is a far more practical requirement and demonstrates the powerful potential of visual simulation systems employing head-directed fields-of-view with image density variation.

Is such a concept feasible considering the expected head and eye movements during flight? These premises are examined in the following paragraphs.

3.3 HEAD AND EYE MOVEMENTS DURING FLIGHT

Reference 2 contains a literature review by the author on head and eye movements in flight and measurement technology. Some of the literature reviewed was for rotorcraft flight. In overview, the head and eye movement data showed a high correlation to the maneuver profile being performed. For example, during 180° autorotations, fixation was predominantly directed at the intended touchdown area with the head accomplishing about two-thirds of the total angular rotation required; the eyes taking up the rest. Eye movements relative to the head were distributed such that 90% of them were of ±12° or less with the remaining 10% accounting for movements between ±12° and ±25°. The results showed that azimuth or elevation eye movements are mostly of small amplitude, i.e. 10° or less. These movements would fit within the high image density central field portion of the head-directed display previously described. Also, maximum head movements corresponded to those from a second order 0.7 damped lag with a 2 Hz natural frequency when responding to step amplitude imputs of up to ±150 degrees. The maximum velocities are about 360 degrees/second and the maximum accelerations about 6000 degree/second^2. These head movements are obviously greater than those of the rotorcraft itself and raises questions relating to the implemen-

tation of the head-directed visual simulation with either a head-slaved or a head-carried display device.

Reference 2 also states that, fortunately, the head-tracking technology is well-developed and off-the-shelf hardware is available.

It is tempting to reduce the size of the high image density field by introducing eye movement measurements, but as Reference 2 points out "no single [eye tracking] concept or device appears suitable for integration into a flight simulator area-of-interest [head/eye directed] display due to excessive obtrusiveness (viewers field obstructed, unable to use eye glasses or contact lenses), limited range, large calibration effort required, complexity, and excessive skull stability requirements."

There is a subtle difference between a head-slaved and a head-carried implementation of a head-directed area-of-interest visual system. This has to do with the head orientation sensor performance and image generator capability for small-amplitude high-frequency head movements such as would be induced during turbulent flight.

The human observer can easily maintain fixation on an object in spite of small-amplitude high-frequency movements of the head where the amplitudes and frequencies reach several degrees and up to two Hz respectively. This is made possible because of compensatory eye movements induced by the vestibular organs and neck receptors.

Consider a visual system employing a head-carried display device and a computer image generator. The head tracker must produce a reasonably clean and accurate (1-2 degrees) set of orientation measurements at high frequencies and these signals must be used to update, i.e. shift imagery being sent to the display device.

The orientation measurement and image generation hardware usually perform their digital computations at a 30 Hz iteration rate. It is doubtful that a clean, accurate head position measurement could be taken at frequencies of two Hz and it is not likely that an image generator cycling at a rate of thirty Hz could produce an image moving at two Hz that is devoid of some degradation. If these premises are true, the result would be either a failure to fixate properly or a degraded image or both.

The situation with a head-slaved area-of-interest concept eases the difficulties. First, the visible field-of-view need not be placed before the observer's face with a high degree of angular precision; with ± 5

degrees being probably sufficient. Second, a lag could be introduced (or may naturally exist) that would reject the high-frequency head movement signals, thereby relaxing the requirement for these signals and making it easier for the image generator to "keep up".

These issues have been considered in the concept deliberations and when examining head-carried mechanizations, the risks associated with these issues were carefuly weighed in the final selection. Other factors relating to the head-carried concepts that reduced their attractiveness were the obtrusiveness and weight of the helmet-mounted display device. A summary of the important scene generation parameters is shown in Figure 3.

3.4 CONCEPT DELIBERATON

Four factors were the drivers in arriving at a preferred concept. They are considered to be the first level of hardware requirements and are based on the uses of a rotorcraft simulator for rotorcraft systems research and development within a Government research facility. The requirements are listed below:

1. A high degree of flexibility in arranging crew seating and cockpit equipment.
2. Rapid interchangeability of cockpit components without the need for visual system reconfiguration or realignment.
3. Minimum interference with crew members so as to permit the use of equipment such as helmet-mounted avionic displays or vision aids.
4. Sufficient imagery for a nearby (1.2-1.8 meter (4-6 feet) away) crewman to permit him to provide realistic prompting to the primary crewman (pilot) in interactive mission simulations.

When the above first-level hardware requirements are integrated with the basic visual requirements from Section 3.1, they comprise the important factors used to rationalize a preferred hardware concept.

The following concepts were considered during the study. The primary reasons for their acceptance or rejection are also included. These reasons not only included the factors described earlier, but also those resulting from a technical risk assessment:

FIGURE 3 SUMMARY OF IMAGE GENERATION PARAMETERS

NUMBER OF LIMINANCE TRANSITIONS, TRANSITION DENSITY PER SQUARE DEGREE, AND FIELD SIZE

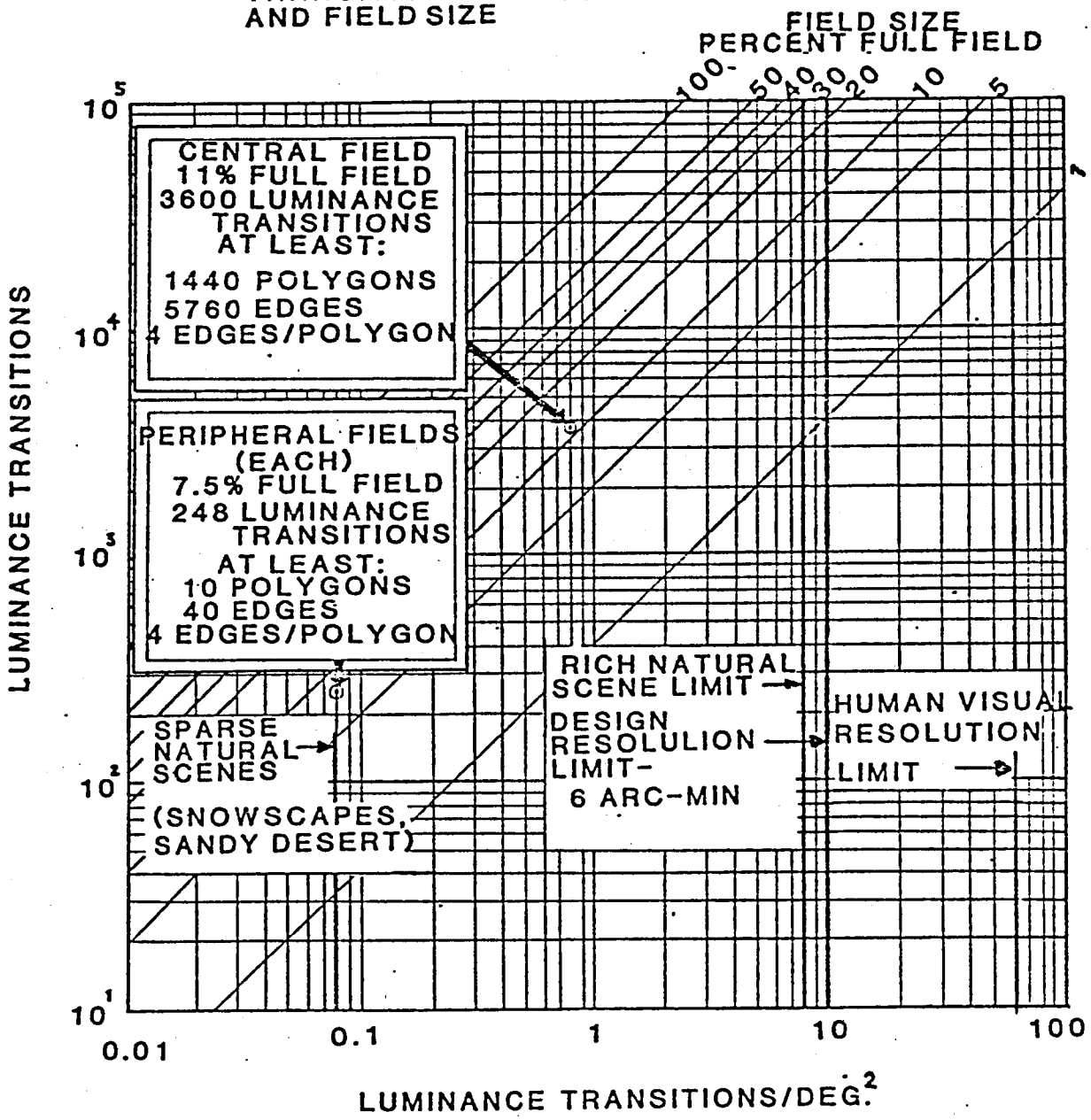

1. An enveloping array of Cathode-Ray-Tubes (CRT's) and collimating light relays may be fed by a computer image generator to yield a large field-of-view visual system. This system was rejected because its small exit pupil restricts the viewing region to that useable by a single crewman.

2. An array of projectors inside a dome screen can be driven by a computer image generator. This system was rejected because of its inadequate field coverage due to the limited number of projectors that can be placed within the dome without interfering with the cockpit.

3. Several projectors fed by computer image generators may be arrayed so as to illuminate a back projection screen placed above the observer. A wraparound reflective collimator then relays the image to the observer. A large viewing region is possible, but the system was rejected because of inadequate overhead field coverage.

4. A computer image generator driving a scanning laser projector carried above the primary crewman can create a large field on the inside of a dome screen. The concept was rejected because of inadequate (overhead and backwards) field coverage.

5. The images of two helmet-mounted CRT's may be relayed to each eye by collimating optics also mounted on the helmet before each eye. Two computer image generators transmit an image signal to each CRT. The concept was rejected as a system for the primary crewman because of the obtrusiveness and weight of the helmet-mounted hardware and the risk associated with the issues raised in Section 3.3. Also, the cockpit structure masking techniques appear to hold a high technical risk. The concept, however, is a good one for the second crewman for whom these factors are less important.

6. The helmet-mounted concept described above may be modified to include an aligned fiber optic cable to relay the image to the vicinity of the eyes with some weight savings and added mobility. These improvements, however, do not appear to offset its disadvan-

tages sufficiently to warrant acceptance and the concept is, therefore, rejected for use by the primary crewman. It is an acceptable approach for the other crewman.

7. An array of translucent screen modules may be placed around the cockpit and illuminated by projectors placed outside the screens. This concept was rejected because of the large number (8-10) of projectors required to obtain adequate field coverage, its large inertia and its large space requirement.

8. A dome (outside) screen may be illuminated through small apertures in the screen by an array of projectors placed outside that are fed by computer image generators. The projection optics must be designed to produce acceptable imagery in spite of a large skewness between the screen area illuminated and the optics. The concept was rejected because of the optic's technical risk and the concept's large inertia.

9. A helmet-mounted projector similar to a miners' lamp may be fed by a computer image generator. A wraparound dome screen accepts the image and the illumination levels, screen gain and cockpit structure surface are manipulated so that the cockpit structure reflection is not objectionable. The concept was rejected because of its tendency to "blind" the second crewman when the projector is pointed at him and the issues discussed in Section 3.3.

10. The preceding helmet-mounted projection concept may be implemented using a scanning laser projector instead. The disadvantages remain so the concept is similarly rejected.

11. A scanning laser projector may be modulated by a computer image generator. Its light may be directly viewed via wraparound reflective optics. The concept was rejected because of its small viewing region suitable for only one crewman and the implied safety issue.

12. A large number of conventional or flat-panel CRT's may be mosaicked around the cockpit. Groups of them may be fed by computer image

generators. The concept was rejected because of the large number of CRT's required and the resulting large inertia and the structure required to hold it. Use of the flat panel CRT's was rejected because of the high risk involved.

13. A mosaic of CRT's with mirror/beamsplitter collimating optics may be placed on structure surrounding the cockpit and driven by a computer image generator. The concept was rejected because of inadequate field coverage and small viewing region suitable for only one crewman.

14. An area-of-interest concept may be implemented by slaving an array of projectors carried on gimbals mounted near the cockpit. A computer image generator supplies the projectors with image data and the whole assembly is carried within a dome screen. The projector's gimbal center (intersection of its rotational axes) is made virtual and placed near the dome screen center. The concept was rejected because of the large masses of gimbal structure and projectors that must be head-slaved.

15. An area-of-interest concept using television camera/model elements may be created by employing a head-tracked camera and servoed projector within a dome screen. The concept was rejected because of camera depth-of-focus limitations which reduce the near-field resolution and the inadequate instantaneous field-of-view.

16. An area-of-interest system may be implemented using projectors, lens or fiber optical relays and projection optics carried close to the center of a dome screen. The projection optics are head-slaved (orientation only). The projectors are driven by computer image generators. The concept was rejected because of light occlusion by above-the-head cockpit structure.

17. A dome screen may be placed around a cockpit structure. On the outside of the cockpit, fixed projection heads (lenses) are placed on a separate structure and together cover three-fourths of the

dome with imagery supplied from a computer image generator feeding projectors. The images from the projectors are relayed by lenses or fiber optic cables to the object surface of the projection head. The concept is acceptable if area-of-interest control of the projectors is included and some adjustment of the projection heads is available to accomodate various cockpit structures.

18. A dome array of solid-state light-producing devices was examined and found to have attractive qualities, however, the concept was rejected because the technology is not available for producing the large number of high-quality chips containing the light-producing elements (diodes, etc.) and controlling them.

3.5 PREFERRED APPROACH

The basic requirements as set forth in Sections 2.0 and 3.1 are considered a strong factor in the definition of the following approach. It is desireable to have the visual system carried independently of the cockpit top structure and yet flexible enough to permit head direction of an area-of-interest field-of-view. Furthermore, it is desireable not to carry any display devices on the head so as to allow the use of helmet sights or vision aids and minimize the impact of the issues raised in Section 3.3. Also, the space immediately behind the cockpit should be left open so as to permit the possibility of designing the cockpit so it may be slid in and out of the display "module" without necessitating visual system realignment or reconfiguration. This space is inevitably where observer and experimenter stations tend to become located. This space is also usually the most convenient for moving cockpit elements in and out of the cockpit shell.

The area-of-interest concepts described by Numbers 8, 14, 16 and 17 come close to embodying the principles deemed best for the application. Head direction of an area-of-interest field-of-view appears imperative in view of the image generation performance potential. A projection concept inside a dome screen appears to have the potential of providing some imagery to a second crewman and also result in small inertia. The use of projectors carried near the dome center is an excellent way to use projection hardware, but, unfortunately, this space must also contain the crewmen and

the cockpit. Also, projectors are bulky and, if placed directly behind the cockpit, would restrict the ease of interchanging cockpit elements. The use of relay optics to remove the projectors from this area is logical. The placement of the projection optics near the dome center is excellent, however, the top cockpit structure will occlude the image particularly when head-directed slaving of the projection elements is employed.

The preferred approach carries this progression farther until the cockpit top structure occlusion is eliminated or reduced to acceptable levels. The preferred concept is shown schematically in Figure 4. The image data is created by a three-channel computer image generator that feeds its signals to projectors carried on independent structure located above and behind the cockpit. The projectors generate an image which is relayed by a rigid fiber optic bundle to near the end of a servo-driven arm. At the end of this arm, a servo-driven projection head transmits the image to the screen. The arm is driven in two axes by pilot head translational and rotational movements so as to avoid cockpit occlusion. The additional three rotational axes of the projection head are also driven by the pilot's head movements to maintain the field-of-view before his face.

The optical relay is designed for maximum resolution on the center of the field-of-view and lowered resolution at the peripheral portions. Drive algorithms for the arm and projection head servos are user-specific. The user would have a choice of utilizing a fixed, but adjustable, field-of-view, or incorporate a head rotational motion-directed area-of-interest field format, or one that also included translational head movement direction. The need would depend on the simulation, the desired field-of-view location and the cockpit top structure form. It is expected that a few "favorite" algorithms would evolve and become "standard" implementations of the head-directed area-of-interest visual system.

If projectors such as the solid or liquid-crystal type were to be employed, a high-resolution version would be needed to generate the image for the central channel. Lesser equality projectors are implied for the peripheral channels. The fiber optic relay from the projectors to the end of the arm are of the rigid, aligned-fiber type. It is suggested that the projection hardware be carried on two small-amplitude gimbals that also carry the arm. The rotational movements of the projectors are small and only used to give an effective translation of the projection head at the

FIGURE 4 PREFERRED APPROACH SCHEMATIC

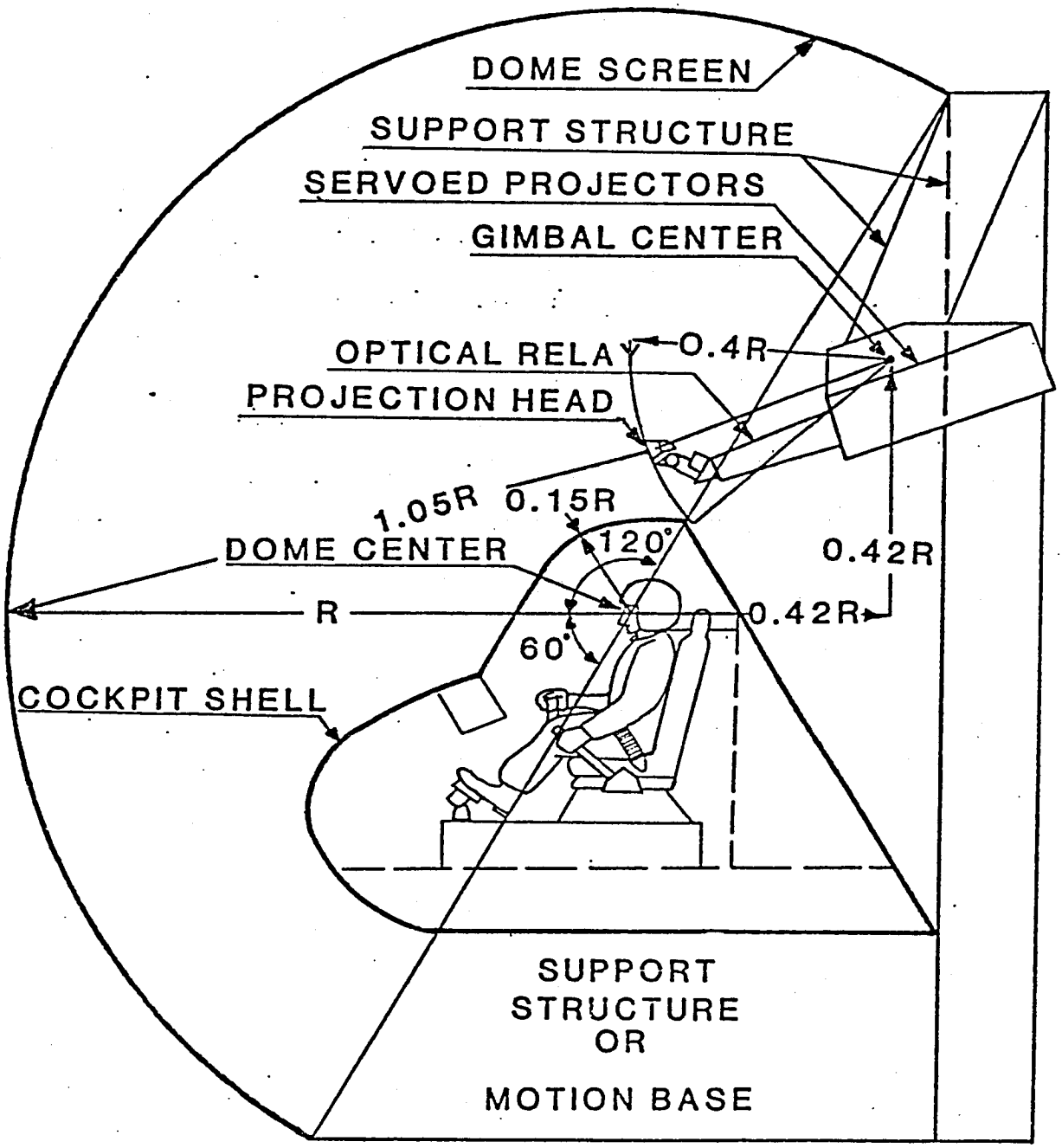

end of the arm. The projection head at the end of the arm is an array of lenses and lens-prism combinations that relay the image on the end of the fiber plate to the screen. The lens system is designed to image the downstream or output end of the fiber plate onto the screen. The translational movements of the head are about 19 percent of the screen radius, a reasonable value considering depth-of-focus constraints.

The order of rotation of the two gimbals of the projection head is chosen so as to match the preferred comfortable head motions expected. A brief survey of large head motions revealed a tendency to move in a pitch-yaw order. For example, pointing the head to the upper right portion of a cockpit results in an orientation that can be described by only two Euler parameters, not three, and suggests the use of a simpler pitch-yaw order of rotation.

A variation in this concept results if a scanning laser system is used in place of a solid or liquid-crystal projector. In this case, the scanning head may be fixed to the cockpit with the arm and fiber plate rotating around it to produce the translational movements of the projection head. The image on the plate input surface would, of course, have to be shifted in order not to produce an apparent rotation of the image on the screen.

Still another variation is possible where the laser scanning elements are separated by a fiber optic ribbon. In this case, the high-speed line scanner is carried at a location conveniently away from the cockpit and dome center. The high-speed beam is carried by a fiber optic ribbon to the input end of the arm where a slower-speed frame scanner spreads the scan on the spherically-shaped end of the fiber plate.

In all three of these variations, the fiber optic relay may be rigid, i.e. the flexibility of the fibers is not necessary, thereby providing some additonal options to follow in its manufacture. Some of the important details of the optical relay are discussed in Section 3.6.

3.6 THE OPTICAL RELAY

Three aspects of the optical relay were considered. They are listed and discussed below:

1. Arm Movements Required to Minimize Occlusion From the Cockpit Top Structure:

A graphical analysis was performed to determine the projection head movements required to minimize occlusion from the cockpit top structure. A generic top structure shape was assumed that was a section of a 0.46 meter (18 inch) radius sphere with its center at the pilot's nominal eye point. A small nose permitting a large forward look-down angle was also assumed. The projection head was assumed to be able to translate on the end of the arm relative to the cockpit and rotate its optical axis. The results showed that a lateral displacement of 0.33 meter (13 inches) permitted the head to rotate such that its projected field-of-view would easily reach a look-down angle of 60 degrees over the sides of the cockpit.

Achieving the same look-down angles over the nose requires the same translation forward or a raising of the head about the same distance. This led to the conclusion that the movements of the projection head are best facilitated by mounting the head on the end of an arm driven in two-axes such that the head movements are approximately ±0.33 meter (±13 inches) laterally and ±0.30 meter (±12 inches) vertically. Overhead field coverage is obtained by moving the arm down and rotating the head up. The arm must be moved above and laterally in order to cover look-down angles of 15 degrees for the field areas to the opposite side of a wide cockpit with side-by-side seating. Coverage for this portion is dependent on the width of the cockpit and the depth of the side window and appears possible for several of the more common rotorcraft window layouts if the projection head is raised 0.58 meter (23 inches) above its neutral positon. The concept outlined here is shown schematically in Figure 5.

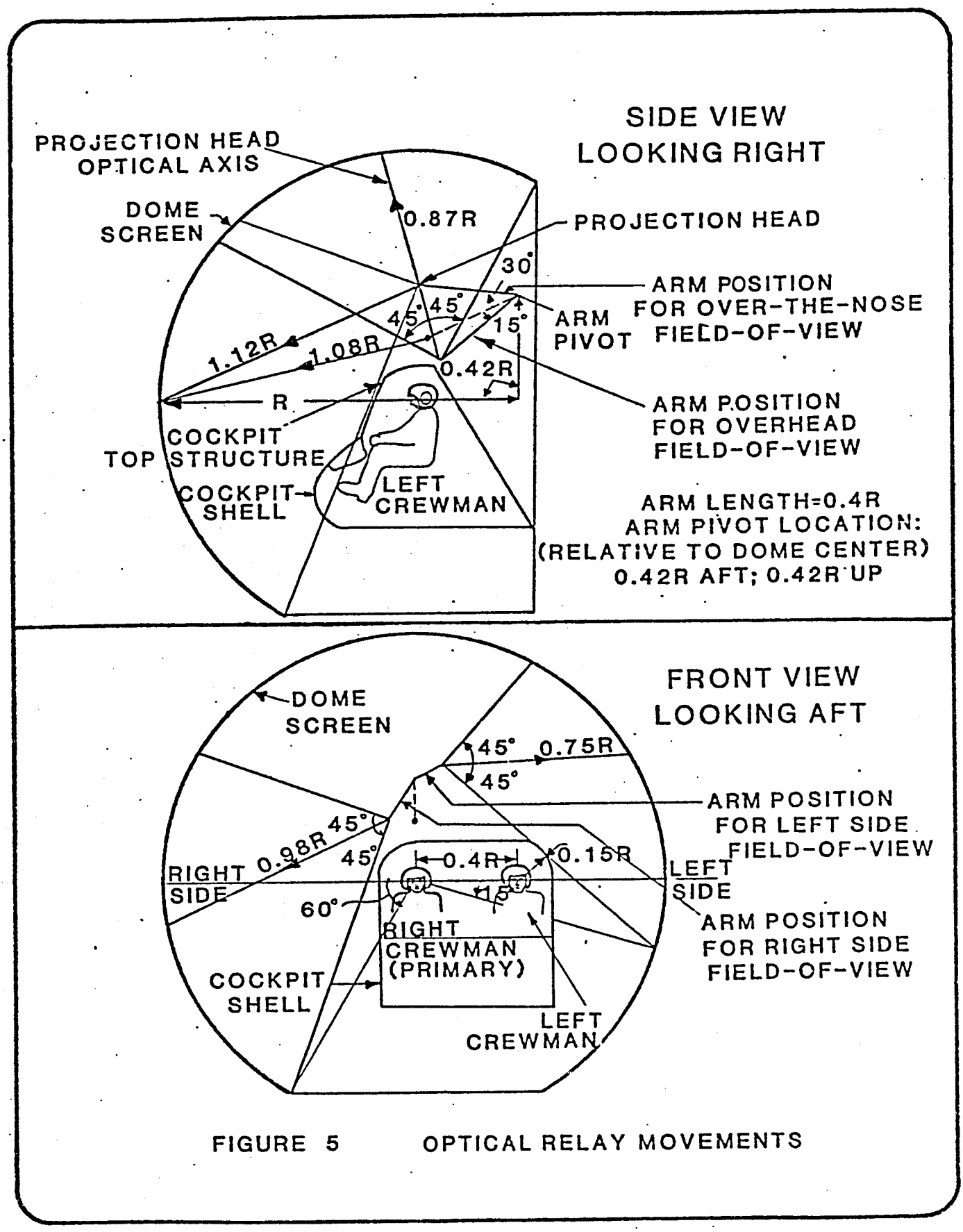

FIGURE 5 OPTICAL RELAY MOVEMENTS

2. Possible Fiber/Lens Configurations:

The purpose of the fiber optic plate is to relay the image from the output surface of the projector(s) to a surface located in the arm that is convenient for imaging onto the screen by the projection head. If the image "writer" is an array of three projectors such as the liquid or solid crystal light valve type, the input end of the fiber plate must be designed to mate with the "writing" surface of these projectors. This could involve splitting the fibers into three "semi-rigid" bundles, the ends of which are ground and polished to accept the projector interface. The flexibility of the fiber bundles is expected not to be high enough to permit the rigid mounting of the projectors and it is implied that the projection hardware must be also carried on the gimbals that move the arm.

For the option where a scanning laser system is used as an image "writer", the input end of the fiber plate is entirely different. The laser scans are usually portions of arcs in a spherical coordinate frame and, therefore, the surface that accepts the laser "spot" should also be spherical. The scanning head and laser source, however, may be fixed to the support structure which in turn is attached to the same structure that the cockpit is. This means that the optical relay arm with its spherically-shaped input surface must be carried on gimbals that rotate the arm about the scanning head. A shift of the image is implied that is proportional to the arm rotations. The concept leaves room for safety structure around the scanner and for light cutoff devices in the arm to guard against a bright static spot being projected in the event of scanner failure. A schematic of the optical relay using the two image "writer" concepts is shown in Figure 6.

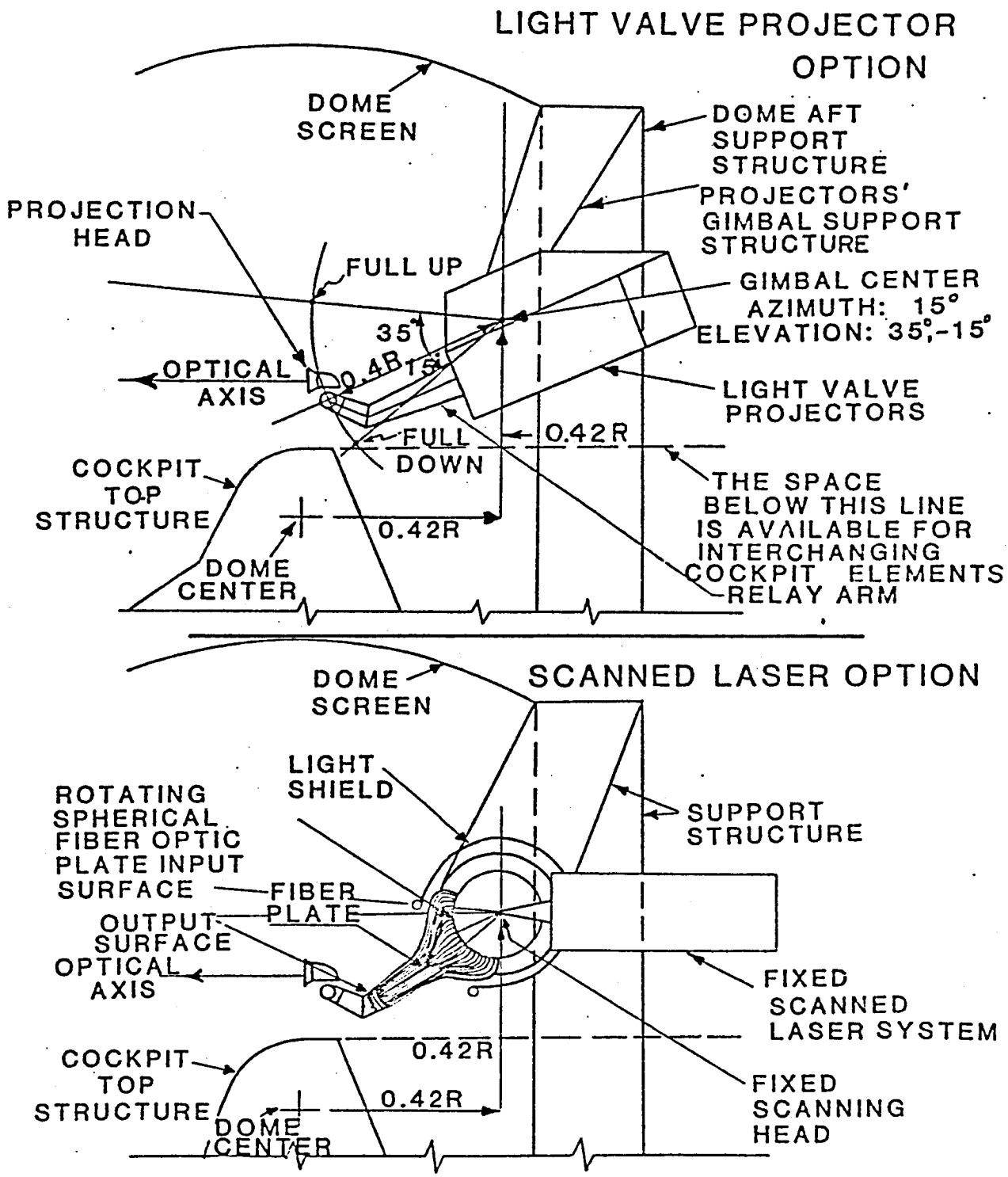

FIGURE 6 OPTICAL RELAY OPTIONS

3. Possible Projection Head Geometry:

The purpose of the projection head is to take the image contained on the output end of the fiber plate and project it onto the screen. In its simplest form, this is nothing more than a projection lens except that it must cover a large field-of-view (approximately a circular field 150° in diameter) and be able to place this field within the 8.58 steradian fixation boundary described in Section 2.0. In a sense, it is very similar to a conventional television modelboard probe except that the light direction is reversed and its lens elements are larger and not necessarily designed for the maximum resolution over the entire field-of-view. The area-of-interest rotations can be accomplished by substituting right angle prism/lens combinations in place of two of the lens elements and including a rotator such as a dove or pechan prism. This array is commonly employed in the television camera probes used with modelboards. When the prisms are rotated by servomotors, the optical axis of the "downstream" lenses may be pointed within the 8.58 steradian solid angle.

As was stated earlier, the system may be designed for lesser resolution at the edge of the field. The surface of the exit end of the fiber plate need not be flat, but of a shape more suitable to the lens design. Also, the projection lens must be designed to produce acceptable images on the screen from any point within a 0.58 meter (23 inch) radius of the screen center. For a screen of 3.05 meter (120 inch) radius, this represents an operating radius of 19% of the screen radius. This value is not expected to place unrealistic demands on the lens design in terms of achieving an adequate depth-of-focus, minimizing distortion and maintaining a uniform field luminance level. Again, the choice of the order of rotation of the "prism gimbals" reflects the observation of large head movements where they appear to be best described by two Euler angles in the pitch first, then yaw order of rotation. A schematic view of a possible projection head arrangement is shown in Figure 7.

FIGURE 7 POSSIBLE PROJECTION HEAD GEOMETRY

A PROJECTION OPTICAL SYSTEM UTILIZING LENSES AND LENS/PRISM UNITS THAT ARE SERVO DRIVEN. YAW;±100°,PITCH;+100°,-40°

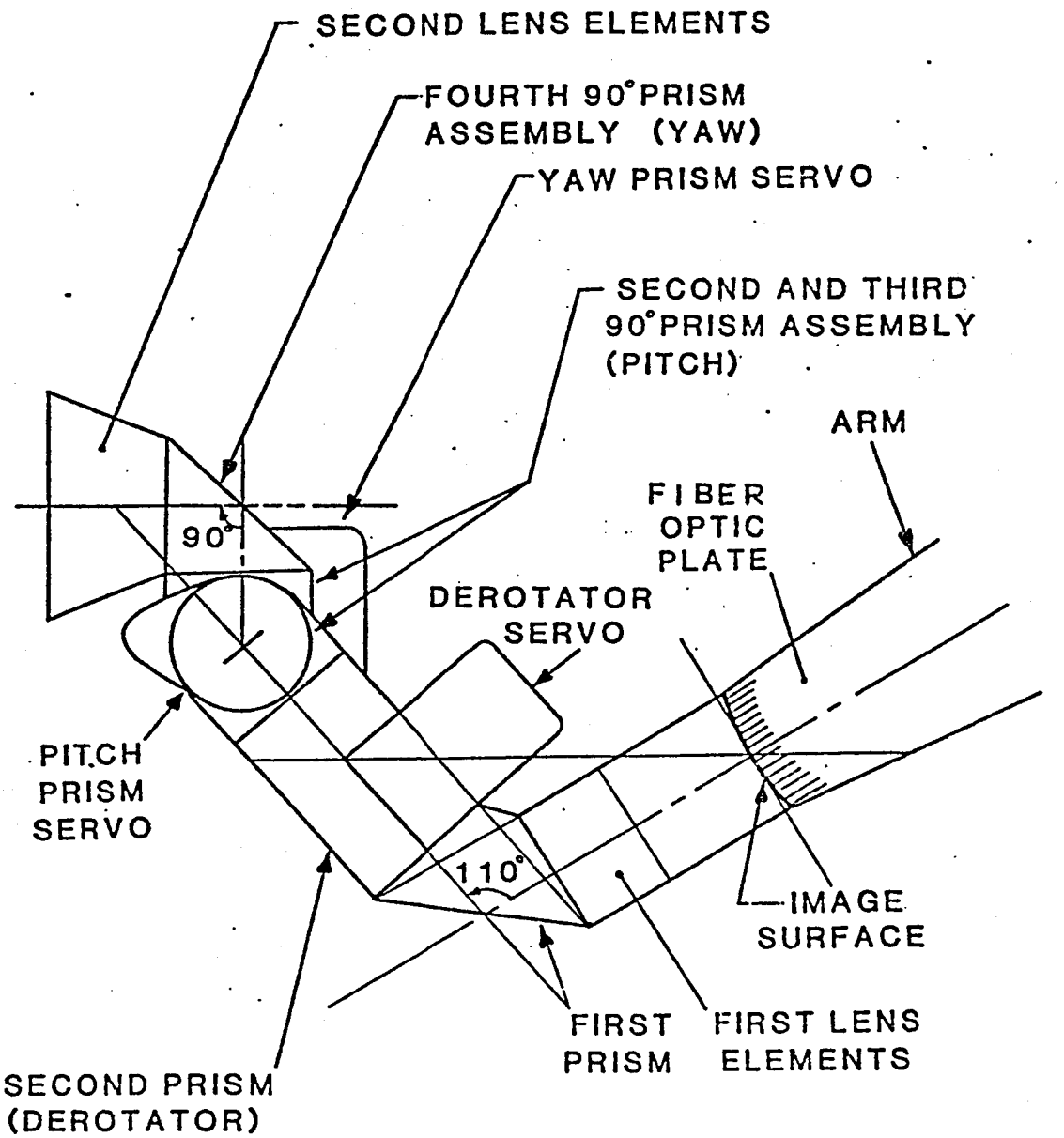

3.7 SUMMARY OF THE PREFERRED APPROACH

A preferred approach has been conceived that meets all of the basic requirements. It is based on the use of a dome screen with projectors using a servoed projection head. The head is directed by pilot head orientation and achieves some translation oweing to its being carried on the end of a servoed arm. The arm contains a rigid fiber optic plate that transmits the image from projection-type image "writers" to the projection head. Movements of the arm are controlled by pilot head rotations and translations so as to minimize occlusion from cockpit top structure. Two image "writers" were considered consisting of either three light-valve projectors or one scanning laser system. The three light-valve projectors are also carried by the arm gimbals, however, the laser scanner is fixed while the arm moves around it.

It is expected that many simulations may be accomplished with a fixed arm and projection head. Some will require pilot head direction of the projection head and a few will also require arm movements. The concept can be adapted to two kinds of image "writers", however, the potential for adaptation to any form of image "writer" that creates an image on a surface is implied.

The components involved in the optical relay do not require "high technology" as they are composed of lenses, prisms, fiber cables and servomechanisms. There is some risk associated with the projectors as they are not commonly employed in such applications.

The concept offers a minimum of interference with the cockpit and crewmembers and provides space for and adaptability to other image writers. Some imagery will be available to a nearby second crewman although it will be distorted, indistinct in some places and perhaps placed before the primary crewman's face and, therefore, will move depending on where he is looking.

A computer image generator is the creator of the image data that modulates the projector's light output. This generator for the three projector concept can have three channels. One is the high image density channel that is capable of providing the image detail required by central (foveal) vision. Two lesser image density peripheral channels are used for the side portions of the head-directed field-of-view. The same generator concept could be used with a single scanning laser projector. Although the fields

described are not necessarily optimized, they illustrate the point that the use of a relatively small head-directed field-of-view is the key factor that provides a high effective image density over a large field-of-view.

Some estimates of the properties and expected performance of the concept are listed in Table 1.

TABLE 1

PREFERRED APPROACH PROPERTIES

1. FIELD-OF-VIEW

Instantaneous field-of-view is elliptical, 150° wide by 90° high. See Figure 2. The central field is 50° wide by 90° high and comprises a solid angle of 11% full field. The two peripheral fields comprise a solid angle of 7.5% full field each. The total field coverage is 68% full field. See Figure 1.

2. RESOLUTION

Six arc-minutes/optical line pair on axis.

Thirty arc-minutes/optical line pair at 75° off-axis.

3. LUMINANCE

Thirty-eight candela/meter^2 (eleven foot-lamberts) highlight (light valve projectors).

0.14 candela/meter^2 (0.04 foot-lamberts) per watt radiant power (laser).

(3 meter diameter dome screen, screen gain = 1.5).

4. IMAGE GENERATOR

Central field; at least 5,760 edges or 1,440 polygons. 72 edge crossings per 90° long scan line. Peripheral fields (total); at least 80 edges or 20 polygons. 7 edge crossings per 85° long scan line.

5. FIBER OPTIC RELAY

Number of fibers; $\sim 10^7$

Fiber diameter at output end $\sim$ .018 mm (.0007 inch)

Transmission $\sim$ 60%

6. PROJECTION HEAD

Yaw $\pm$ 100°

Pitch + 100° - 40°

Four prism element, one derotator

Transmission $\sim$ 63%

4.0 SOME ADVANCES IN MOTION PLATFORM IMPLEMENTATION

In the past decade, simple motion platform concepts have been developed that use an array of linear hydraulic actuators to both hold and move a platform. The more common varieties include the familiar "six-post" or "synergistic" concept. The attractiveness of the concept stems from its simplicity. No gimbals are needed and by simply moving a platform about using six linear actuators attached at their ends by ball joints, six degrees of freedom may be achieved. These devices are extremely clever and popular and their continued use is a certainty for many years to come.

The actuators are usually all identical and the legs are capable of a stroke of ±23% of their mean length. Depending on the height-to-width ratio and the stroke of these devices, they can produce more horizontal displacement than the stroke of their acuators, hence, the term "synergistic".

To use one of these devices, it is merely necessary to compute the Euler parameters and translational excursions required of the platform. This is usually performed by the drive logic which translates the angular acceleration and specific force of the pilot's station into the platform movements just described.

The platform movements are then used to calculate the length of each leg (actuator) and the signals corresponding to these lengths are then fed to each servo drive. The calculations are sometimes simplified and the actuator's drive signal is limited to the corresponding maximum and minimum leg length permitted by the available stroke. The limiting values of the platform Euler angles and translational excursions are a complex function of all of these parameters and the geometry of the legs. For example, pitch may reach a limit before roll and both limits could be highly dependent on the surge.

In reviewing the literature on integration of the drive logic and limits for these devices, only one reference (Reference 3) considered the interaction of the limits. The excursion performance of these devices is usually stated two ways; in terms of its maximum single degree-of-freedom excursion or it's simultaneous excursion performance. Usually only a few points are given for this complex function and the drive logic designer rarely knows what it is.

The point to be made here is that the accounting of these limits could

improve motion simulation by 1) allowing movement if it is available without cross coupling, and 2) allowing drive logic design to make use of all of the available travel. To illustrate these points, an analysis of a specific three-post platform was performed. This platform is used to produce rotations only and is assumed to be resting on a central rigid post through a ball joint. The legs were assumed to have a length variability of ±17% of their mean length, i.e. a minimum length of 2.11 meters (83 inches) and a maximum length of 2.97 meters (117 inches). The platform geometry and the limits are shown in Figure 8.

The extreme variability suggests the use of variable braking on the individual Euler angles and translational excursions. In this way, the maximum travel of the device is utilized without permitting cross coupling. For example, if at a pitch of 30° and a yaw of 30° a roll command of more than 5° were introduced, the limits would dictate a yaw movement. However, if roll were to be limited to +5°, no yawing cross-coupling would occur.

A drive logic scheme for including such variable braking is shown in Figure 9. Figure 10 shows the results of a computer implementation of this scheme.

In summary, the drive logic of multi-legged motion platforms should reflect the complex limits of such devices. Variable-limit braking similar to encountering a moving damped stiff spring on each Euler angle and translational position can improve the utilization and quality of motion simulation using these devices. Their complex limits should be taken advantage of when configuring the drive logic. With six-legged devices, "drifting" the platform to certain positions may permit much more pitch or roll.

A simple computer program listing written in DEC BASIC will be provided to any interested person by the author upon request. This program will calculate the limits of any multi-legged motion platform given the location of the leg ends and stroke.

FIGURE 8 THREE-POST MOTION PLATFORM GEOMETRY AND LIMITS

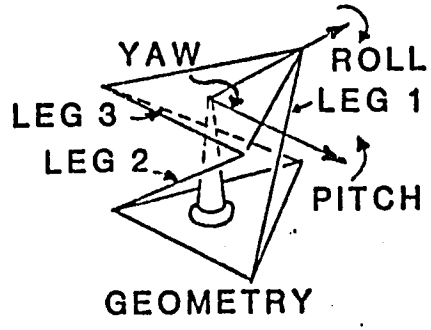

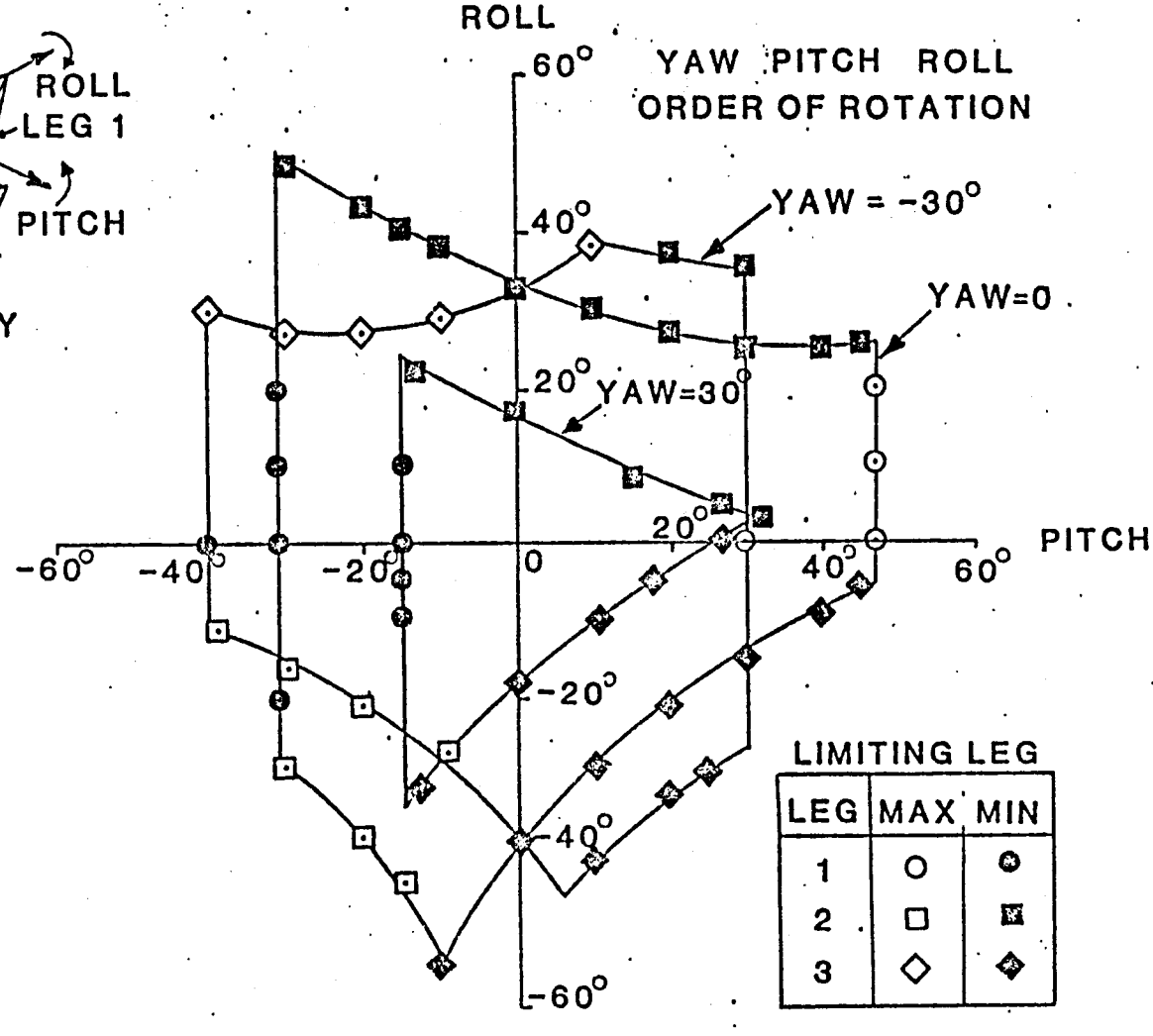

FIGURE 9 VARIABLE-LIMIT BRAKING SCHEME. SHOWN FOR POSITIVE ROLL ONLY.

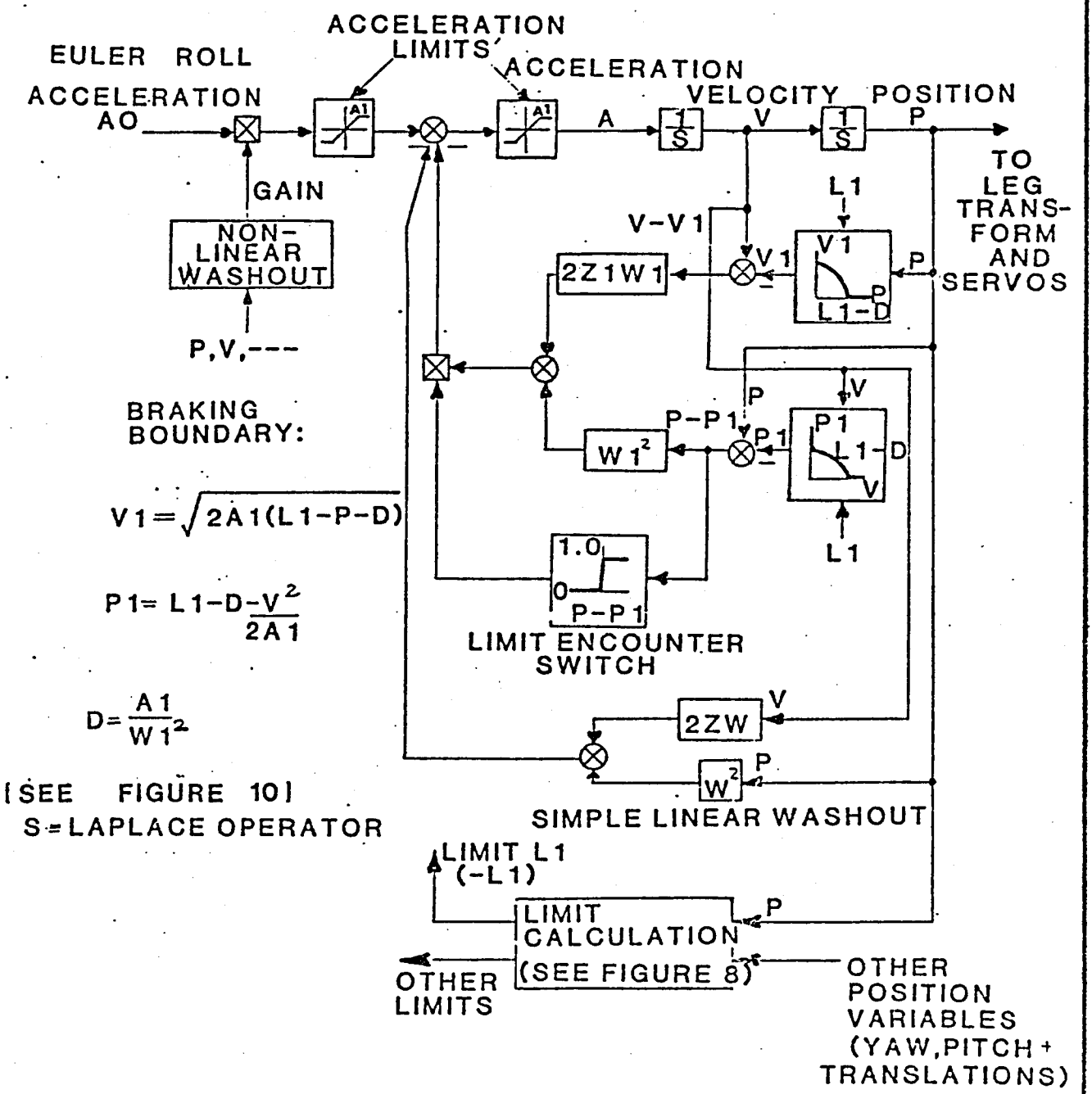

FIGURE 10 BRAKING TIME HISTORY

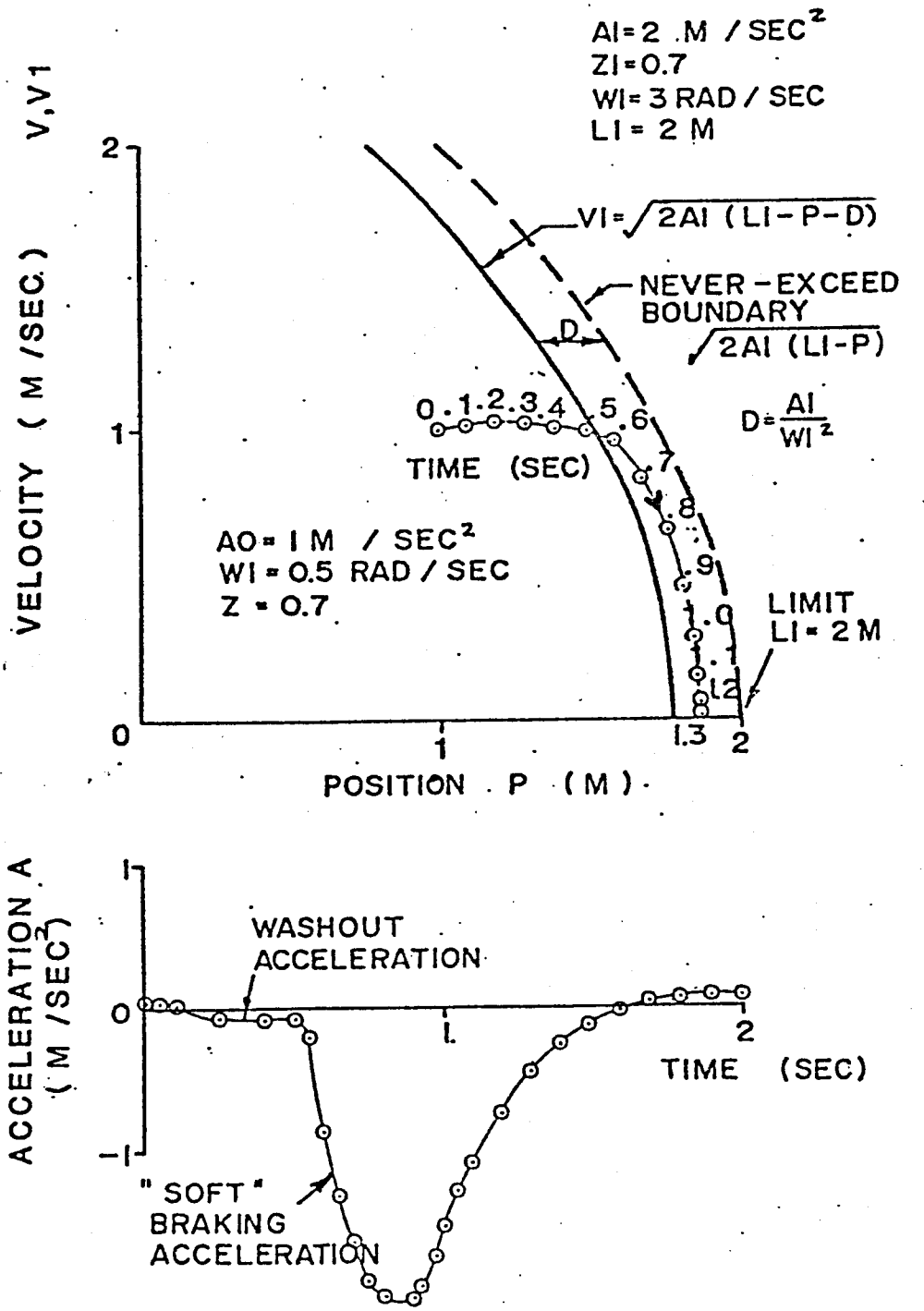

5.0 RECOMMENDED RESEARCH

Three issues were uncovered during the study that warrant research in order to establish concept feasibility and risk. They are listed and discussed below:

1. The performance potential of helmet-mounted display visual systems needs to be established in terms of head movement measurement accuracy required and image generator capability. These should be determined with experiments to study image stability and quality in the presence of both voluntary and involuntary head movements of amplitudes of $\pm 120°$ and frequencies up to 2 Hz.

2. The image density and field size required for both the central and peripheral channels of a head-directed area-of-interest visual system must be more accurately established using objective measures as defined in this report. This should be done by sampling real and artificial scenery using thresholds established for both foveal and parafoveal human vision. Dynamic situations should be considered and the blending required near the interface of the central and peripheral fields must be established.

3. A method must be established to design a computer image generator data base considering required image density and capacity constraints relating to memory and image data retrieval rates.

4. Variable-limit braking should be researched for its potential to improve motion simulation using the multi-legged "synergistic" type of platform device. This research should strive to evolve drive logic schemes that take advantage of a specific limit set. These drive logic schemes should combine the functions of "washout" and variable-limit braking.

REFERENCES

"Bioastronautics Data Book", Edited by Paul Webb, M.D., NASA SP-3006, 1964.

"American Airlines Scanned Laser Final Report Specifications and Modification Supplement", Prepared by American Airlines Inc. and Redifon Simulation, LTD. under contract N61339-77-C-001 for the U.S. Naval Training Equipment Center, Orlando, Florida, December 20, 1979.

Parrish, R.V. , Dieudonne J.E., and Martin, D.J. Jr., "Motion Software for a Synergistic Six-Degree-of-Freedom Motion Base", National Aeronautics and Space Administration NASA TN D-7350, December 1973.

1. Report No.	2. Government Accession No.	3. Recipient's Catalog No.
NASA CR-		

4. Title and Subtitle	5. Report Date
Conceptual Design Study of A Visual System for A Rotorcraft Simulator and Some Advances In Platform Motion Utilization	August 1980
	6. Performing Organization Code
7. Author(s)	8. Performing Organization Report No.
John B. Sinacori	
	10. Work Unit No.
9. Performing Organization Name and Address	
J. B. Sinacori Associates P. O. Box 1043 Hollister, California 95023	11. Contract or Grant No.
	NAS2-10278
12. Sponsoring Agency Name and Address	13. Type of Report and Period Covered
National Aeronautics and Space Administration Washington, DC 20546 U.S. Army Aviation Research & Development Command	Contractor Final Report
	14. Sponsoring Agency Code

15. Supplementary Notes

Technical Monitor: Arlin Deel, Mail Stop 215-1, NASA Ames Research Center, Moffett Field, CA 94035 (415) 965-5891 or FTS 448-5891

16. Abstract

A conceptual design of a visual system for a rotorcraft flight simulator is presented. Also, drive logic elements for a coupled motion base for such a simulator are given. The design is the result of an assessment of many potential arrangements of electro-optical elements and is a concept considered feasible for the application. The motion drive elements represent an example logic for a coupled motion base and is essentially an appeal to the designers of such logic to combine their "washout" and "braking" functions.

17. Key Words (Suggested by Author(s))	18. Distribution Statement
Visual system Rotorcraft simulator Platform, motion, utilization	Unclassified - Unlimited STAR Category - 05

19. Security Classif. (of this report)	20. Security Classif. (of this page)	21. No. of Pages	22. Price*
Unclassified	Unclassified	33	

*For sale by the National Technical Information Service, Springfield, Virginia 22161

End of Document