N O T I C E

THIS DOCUMENT HAS BEEN REPRODUCED FROM MICROFICHE. ALTHOUGH IT IS RECOGNIZED THAT CERTAIN PORTIONS ARE ILLEGIBLE, IT IS BEING RELEASED IN THE INTEREST OF MAKING AVAILABLE AS MUCH INFORMATION AS POSSIBLE

NASA Technical Memorandum 82861

Satellite-Aided Land Mobile Communications System Implementation Considerations

(NASA-TM-82861) SATELLITE-AIDED LAND MOBILE COMMUNICATIONS SYSTEM IMPLEMENTATION CONSIDERATIONS (NASA) 10 p HC A02/MF A01 CSCL 09F
N82-25290
Unclas
G3/17 28027

Bruce E. LeRoy
Lewis Research Center
Cleveland, Ohio

JUN 1982
RECEIVED
NASA STI FACILITY
ACCESS DEPT.

Prepared for the
International Communications Conference
sponsored by the Institute of Electrical and Electronic Engineers
Philadelphia, Pennsylvania, June 16–19, 1982

NASA

Satellite-Aided Land Mobile Communications System Implementation Considerations

Bruce E. LeRoy

National Aeronautics and Space Administration
Lewis Research Center
Cleveland, Ohio 44135

E-1229

ABSTRACT

It has been proposed that a satellite-based Land Mobile Radio System could effectively extend the terrestrial cellular mobile system into rural and remote areas. The market, technical and economic feasibility for such a system is currently being studied by NASA.

This paper deals with some of the aspects of implementing an operational mobile-satellite system. In particular, two key factors in implementation are examined: (1) bandwidth requirements; and (2) frequency sharing.

Bandwidth requirements are derived based on the satellite antenna requirements, modulation characteristics and numbers of subscribers. Design tradeoffs for the satellite system and potential implementation scenarios are identified. Frequency sharing is examined from a power flux density and modulation viewpoint.

IMPLEMENTATION CONSIDERATIONS

Introduction

Despite numerous studies (References 1 to 5), mobile-satellite (MSAT) service remains largely conceptual in nature. Numerous questions on the implementation of the satellite system may not receive definitive answers unless field testing can be accomplished. Primary among these questions are considerations of intersystem interference (between satellite systems of different nations or between satellite and terrestrial systems), and cost justification of the satellite system.

This paper deals only with some technical aspects of implementing a mobile satellite service. The purpose is to expose some of the system design implications of technical alternatives. This paper examines communication links, modulation, bandwidth requirements, and briefly indicates a possible start-up scenario.

Satellite Transponder

Figure 1 shows some possible transponder design options. The eventual operational design will be based on answers to traffic questions such as:

1. Of total calls, what percentage are mobile to mobile?
2. What percentage of calls are placed to units (fixed or mobile) outside the UHF beam area?

3. What percentage of calls are placed to units (fixed or mobile) outside the gateway control?
4. Is double hop acceptable?
5. What tariff or other regulatory conditions prevail on "long distance" and "local calls?"

Ultimately, considerations of potential gain and risk will determine how an MSAT system is implemented. The size of the potential market, the market elasticity and economics of scale will dictate a mature operational system design. For now, this paper concentrates on the technical trade-offs and indicates the potential design and performance alternatives.

To examine the impact of technical alternatives a baseline system is constructed by assuming:

Number of subscribers	= 180,000
Peak hour usage	= 0.03 Erlangs/subscriber
Blocking probability	= 0.02
CONUS area	= 15 deg^2
Channel utilization	= 0.4
EIRP/channel	= 40 dBW
Channel spacing	= 30 kHz
Frequency reuse	= 3 subbands reused continuously

With these assumptions, Table I shows antenna diameter, satellite RF transmit power and required bandwidth as a function of the numbers of beams covering CONUS.

Bandwidth Requirements

Currently the reserve bands in the 806-890 MHz band are allocated in such a way that only 8 MHz (821-825 and 866-870) could be used by a satellite system on an exclusive basis. Given the indications of Table I, we have sufficient motivation to reduce the required bandwidth or increase the frequency allocation.

Envelope normalized FM as discussed in Reference 6 requires a 15 kHz channel spacing, thus halving the required bandwidth. Amplitude companded Single Side Band (SSB) could achieve channel spacings of 2.5 - 5 kHz according to Reference 7. Thus, the bandwidth could be reduced by a factor of 0.08 to 0.17 of the Table I values.

Since signal to interference ratio considerations were not accounted for, the satellite may be required to use a 4 or 7 frequency reuse plan. This would increase the Table I bandwidth requirements by factors of 1.33 and 2.33, respectively.

If the use of multiple satellites is considered, the required bandwidth can be reduced directly by the number of satellites in orbit. This concept is practical if satellite to satellite interference is manageable. Techniques to control satellite pointing accuracy and shape overlapping beams to minimize interference, need to be analyzed in detail. The mobile units would have to be capable of discriminating between satellites thus implying higher gain tracking antennas. While this antenna would add cost to the mobile, it would

also reduce the transmitted power required from the satellite, and therefore its size and cost.

Link Analysis and Frequency Sharing

A typical narrowband link analysis for MSAT is presented in Table II and closely parallels that found in Reference (3). Note that the margin is 5 dB. Reference 8 gives the equation for margin required to be above a specified power level over 90 percent of small distances and 95 percent of large distances as:

$$M = 12.5 + 0.17f - 0.17\delta + 1.65\,(6.4 - 1.19f - 0.05\delta)$$

f is frequency in GHz
δ is elevation angle in degrees

The required margin ranges between 16.5 and 11.4 dB for elevations between 20° and 40°, respectively. If we were to increase the margin shown in Table II to 15 dB, then the EIRP per channel approaches 50 dBW. At this value, the power flux density is -113 dbW/m^2/channel. This is a noise power of about -133 dBW per channel that is perceived by terrestrial cellular co-channel systems. Although additional isolation may be achieved by using different polarizations and channel interleaving, the noise power to terrestrial systems is still substantial when compared to the urban noise environment of about -144 dBW/ channel.

If as a design alternative amplitude companded SSB and a channel interleaving plan as shown in Figure 2 are considered, the satellite system could conceivably coexist with the terrestrial cellular networks. Reference 9 suggests that in a multichannel environment a 10 dB gain in numbers of channels could be achieved at equivalent transponder power levels. However, a NASA study shows only a 1 to 2 dB power advantage and an EIA committee found no advantage to SSB (Reference 10). SSB requires a higher S/N ratio than FM because no FM improvement exists and a pilot tone is required.

If a SSB S/N = 13 dB (Reference 10) is assumed and all other factors from Table II remain the same, then the required EIRP/ channel = 36.2 dBW (bandwidth = 5 kHz) which is approximately the same power level as that required for FM. However, the power flux density in the band is about 5 dB higher than that for FM. The PFD for FM is -168.8 dBW/m^2/Hz and -163.8 dBW/m^2/Hz for SSB. This will make it very difficult to integrate the amplitude companded SSB system with the terrestrial cellular system. However, proper transmit/ receive filtering should reduce the perceived interference to a level well below ambient noise.

Finally, consider direct frequency sharing. Current mobile units have 10 dB noise figure receivers and cell site receivers have a 6 dB noise figure. This corresponds to received noise powers of -149.6 dBW and -154.4 dBW, respectively in a 30 kHz channel. These powers are achieved at a PFD of about -143.5 dBW/m^2/channel assuming a 5 dBi cellular unit antenna gain and 0 dBi cell site antenna gain for angles above 20° elevations. Assuming a 3 dB polarization isolation, a permissible PFD is about -140.5 dBW/m^2/channel, which, in turn, corresponds to an EIRP of 22.5 dBW/channel. This is considerably less than the Table II value, which, in turn may be 10 dB low depending on the margin used.

An obvious consideration is to increase mobile antenna gain. Assuming Table II values, a gain of about 15.5 dB is required for the mobile. This would allow reduction of the transmit power to 22.5 dBW.

From the discussions above, it is apparent that there is also a powerful motivation for considering higher gain directive antennas for MSAT mobile units. While such an antenna would increase the cost of the mobile unit, there are a number of potential benefits to be gained such as:

1. Reduce satellite transmit power, size and cost
2. Permit multiple satellite service
3. Permit discrimination to/from cellular systems
4. Permit discrimination between systems (U.S. system, Canadian system, etc.)

While cost considerations have not been studied in detail, placing more burden on the ground unit would reduce space segment capitalization and spread the remaining ground segment capitalization to more nearly match the market growth.

IMPLEMENTATION SCENARIO

As a possible implementation scenario assume:

1. Time zone coverage (2° x 3° beams) gain = 36.5 dB on axis
2. FM channels interleaved with cellular channels providing 4 dB additional isolation
3. Approximately 15 dB mobile unit antenna gain (circularly polarized)
4. Other Table II values apply

Such a system would have about 600 channels with no frequency reuse and accommodate about 21,000 users at a loading of 35 users per channel. A second satellite could be launched when needed and placed about 30° apart from the first. The satellite UHF antenna would be about 12 m by 8 m, well within the reach of current technology. The required EIRP is 26.0 dBW/channel for a net transmit power of 0.2 watts/channel (at beam edge) or about 120 watts RF for the satellite. This is well within current technology limits. The satellite appears to be well within current and projected launch capability.

A variation on this system is an 8 beam system with 1.5^o beams and a 16 m antenna which could reuse the frequency twice. A system of three such satellites could serve 126,000 users.

CONCLUDING REMARKS

From the foregoing discussions, there appears to be a powerful technical argument to pursue mobile antenna technology. In addition to the technical considerations mentioned above, the use of higher gain mobile antennas would tend to mitigate the passive intermodulation problems associated with using a single transmit/receive antenna when there is a large signal imbalance. However, economic considerations need to be studied in detail and may negate the technical advantages.

Other mobile unit technologies for investigation appear to be a low noise front end and changes in signalling processes.

An obvious satellite technology in need of examination is the large UHF antenna. There are, however, considerations such as mobile antenna gain and the use of interleaved narrow bandwidth channels which could permit multiple satellite use and reduce the required satellite antenna technology to that which is readily feasible today.

The requirements for on-board channel switching must be thoroughly documented and justified. If, for example, we were restricted to very large satellites such as those described in Table I and also required full connectivity (Figure 1c), as many as 50×10^6 cross-points would be required.

In conclusion, an implementation scenario has been presented which does not stretch the technology greatly, yet offers reasonably extensive services.

REFERENCES

1. H. L. Loats, C. F. Sauer, and P. A. Castruccio, "Land Mobile Market Integration Study," T-1957 (6638-0200)-014, Battelle Labs, Columbus, OH, Nov. 1980.

2. "Mobile Multiple Access Study," NASA CR-156650. Aug. 1977.

3. R. E. Anderson and R. T. Milton; "Satellite-Aided Mobile Radio Concepts Study," G.E. Document No. 79SDS4240, General Electric, Schenectady, NY, June 1979.

4. R. L. Kelly, R. K. Khatri, J. D. Kiesling, and J. A. Weiss, "Communications System Technology Assessment Study," NASA CR-135224, Oct. 1977.

5. "Technical Considerations for a Land-Mobile Satellite Service Operating in Band 9," CCIR Report 770, Recommendations and Reports of the CCIR, 1978, Kyoto, Japan, 1978.

6. A. M. Goldman, "Systems Studies for a Land Mobile Satellite Service (LMSS)," JPL Document 715-86, Jet Propulsion Laboratory, Pasadena, CA, Sept. 1980.

7. M. A. Herro, F. Nocedal, P. M. Wala, and B. B. Lusignan, "Amplitude Companded Sideband for Land Mobile Radio," Intelcom '80, Proc. of the International Telecommunications and Computer Exposition, pp. 130-135, 1980.

8. "Satellite Sound Broadcasting with Portable Receivers and Receivers Installed in Automobiles," CCIR Report AD/10-11 (Mod F), ITU, Geneva, Switzerland, Oct. 1981.

9. J. W. Mehring, "Amplitude Companded Sideband for Satellite Applications," Intelcom '80, Proc. of the International Telecommunications and Computer Exposition, pp. 30-35, 1980.

10. "Comments on the Federal Communications Commission UHF Task Force Report Entitled 'Spectrum Efficient Technology for Voice Communications'," IEE Communications Magazine, vol. 17, no. 2, pp. 26-27, Mar. 1979.

ORIGINAL PAGE IS
OF POOR QUALITY

TABLE I

NUMBER OF BEAMS	CHANNELS PER BEAM	ANTENNA DIAMETER (m)	BANDWIDTH (TRANSMIT) (MHz)	TRANSMIT POWER (WATTS)
200	36	78	3.2	210
150	47	68	4.1	272
100	65	55	5.8	383
80	77	49	6.9	457
60	100	43	9.0	578
40	145	35	13.1	843
20	280	25	25.2	1596
10	550	17	49.5	3390

ORIGINAL PAGE IS
OF POOR QUALITY

TABLE II

TYPICAL MSAT LINK

NARROWBAND FM

ITEM	VALUE
EIRP/CHANNEL	38.2 dBW
IMPLEMENTATION LOSS	0
PATH LOSS	183 dB
MARGIN	5 dB
BOLTZMAN'S CONSTANT	228.6 dB/^{o}k
MOBILE ANTENNA GAIN	2.8 dB (3 dB CIRCULAR/LINEAR LOSS)
MOBILE LINE LOSS	0
MOBILE TEMPERATURE	27.6 dB (575°K)
CHANNEL BANDWIDTH	44.0 dB (25 kHz)
C/N DOWNLINK	10.0 dB
C/N UPLINK	25.5 dB
C/INTERFERENCE AND INTERMOD	18.0 dB
C/N TOTAL LINK	9.3 dB

ORIGINAL PAGE IS
OF POOR QUALITY

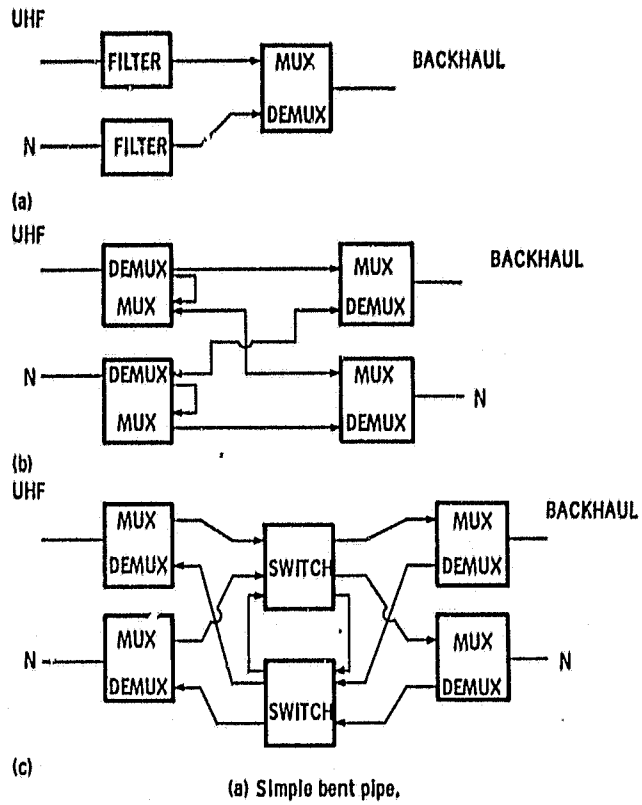

(a) Simple bent pipe.
(b) Hard wire cross-strap.
(c) Switched fully connected.

Figure 1. - Transponder concepts.

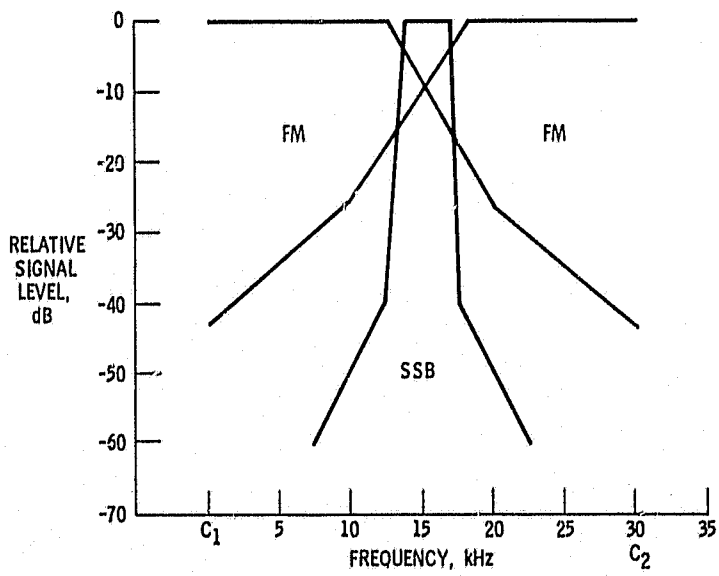

Figure 2. - Channel interleaving.