N O T I C E

THIS DOCUMENT HAS BEEN REPRODUCED FROM MICROFICHE. ALTHOUGH IT IS RECOGNIZED THAT CERTAIN PORTIONS ARE ILLEGIBLE, IT IS BEING RELEASED IN THE INTEREST OF MAKING AVAILABLE AS MUCH INFORMATION AS POSSIBLE

DOE/NASA/0147-2
NASA CR-167877

(NASA-CR-167877) LOW NO SUB x HEAVY FUEL COMBUSTOR CONCEPT PROGRAM PHASE 1A GAS TESTS (General Electric Co.) 135 p HC A07/MF A01 CSCL 21B
N82-25337
Unclas
G3/25 28008

LOW NO_x HEAVY FUEL COMBUSTOR CONCEPT PROGRAM PHASE IA GAS TESTS

General Electric Company
Gas Turbine Division
Martin B. Cutrone, Program Manager

April 1982

Prepared for
NATIONAL AERONAUTICS AND SPACE ADMINISTRATION
Lewis Research Center
Under Contract DEN 3-147
Joseph Notardonato, Program Manager

for
U.S. DEPARTMENT OF ENERGY
Fossil Energy
Office of Coal Utilization

DOE/NASA/0147-2
NASA CR-167877

LOW NO_x HEAVY FUEL COMBUSTOR CONCEPT PROGRAM PHASE IA GAS TESTS

Richard A. Symonds, Combustion Engineer
Kenneth W. Beebe, Combustion Engineer
Martin B. Cutrone, Program Manager
General Electric Company
Gas Turbine Division
Schenectady, New York 12345

April 1982

Prepared for
NATIONAL AERONAUTICS AND SPACE ADMINISTRATION
Lewis Research Center
Under Contract DEN 3-147
Joseph Notardonato, Program Manager

for
U.S. DEPARTMENT OF ENERGY
Fossil Energy
Office of Coal Utilization

ACKNOWLEDGEMENT

Funding for this program was provided by the United States Department of Energy. The Program Manager is Warren Bunker, DOE Office of Coal Utilization. Technical program management is provided by the NASA Lewis Research Center. J. Notardonato is the NASA Program Manager.

Completion of the program described in this report was made possible by the contributions of the General Electric personnel listed below.

K.W. Beebe
R.A. Symonds
N.S. Rasmussen
M.B. Cutrone
M.B. Hilt

K.W. Beebe participated in the design and was responsible for the testing and data evaluation for the rich-lean combustor. R.A. Symonds participated in the design of the rich-lean combustor and was responsible, with support by N.S. Rasmussen, for the design, testing and data evaluation of the catalytic combustor. M.B. Cutrone was the GE Program Manager; M.B. Hilt was the Technical Director.

The authors wish to acknowledge Mr. J. Notardonato, NASA Program Manager, for his cooperation and support throughout the test program.

PRECEDING PAGE BLANK NOT FILMED

TABLE OF CONTENTS

Section		Page
1	ABSTRACT	1-1
2	SUMMARY	2-1
3	INTRODUCTION	3-1
4	TEST FUELS	4-1
5	TEST FACILITIES	5-1
	5.1 Test Facilities and Fuel Systems	5-1
	5.2 Data Acquisition and Emissions Measurement Systems	5-12
	5.3 Test Rig	5-20
	5.4 Instrumentation	5-23
6	COMBUSTOR CONCEPT DESCRIPTIONS	6-1
	6.1 Rich-Lean Combustor, Concept 2	6-1
	6.1.1 Combustor Design Features	6-1
	6.1.2 Fuel Nozzle Design	6-6
	6.2 Lean-Lean Combustor, Concept 4	6-12
	6.3 Catalytic Combustor	6-22
7	TEST RESULTS	7-1
	7.1 Rich-Lean Combustor, Concept 2	7-1
	7.2 Catalytic Combustor Test Results	7-31
	7.2.1 Reactor-Only Operation	7-32
	7.2.2 Pilot-Only Operation	7-39
	7.2.3 Projected Combustor Emissions	7-41
	7.2.4 Test Observations	7-43
8	CONCLUSIONS AND RECOMMENDATIONS	8-1
	8.1 Rich-Lean Combustor, Concept 2	8-1
	8.2 Catalytic Combustor	8-4

LIST OF ILLUSTRATIONS

Figure		Page
4-1	NASA Equilibrium Data for Combustion of 244 Btu/scf Gas	4-5
4-2	NASA Equilibrium Data for Combustion of 209 Btu/scf Gas	4-6
4-3	NASA Equilibrium Data for Combustion of 172 Btu/scf Gas	4-7
5-1	Combustor Test Bay	5-2
5-2	Test Stands 3 (Left) and 4	5-3
5-3	Combustion Test Stand (Schematic Diagram)	5-5
5-4	Instrumented Nozzle Box	5-6
5-5	Combustor Discharge Temperature Thermocouple Rake	5-6
5-6	Process Air System (Schematic Diagram)	5-7

LIST OF ILLUSTRATIONS (Cont'd)

Section		Page
5-7	Flow Schematic of LBtu/Btu Gas System	5-10
5-8	Ammonia Injection System	5-11
5-9	Data Acquisition and Reduction System and Test Stand Control Panel	5-13
5-10	Air Compressor Operator's Control Panel	5-14
5-11	On-Line Exhaust Emission Console	5-14
5-12	Computer Data Acquisition and Reduction System	5-15
5-13	Emissions Console—Schematic Diagram	5-18
5-14	Combustor Test Stand Arrangement	5-21
5-15	Installed Test Rig	5-22
5-16	Test Rig Exhaust Gas Instrumentation	5-24
5-17	Wall Static Pressure Tap Locations, Concept 2 Rich-Lean	5-26
5-18	Concept 2 Liner Thermocouple Locations—Gas Fuel	5-28
6-1	Concept 2 Rich-Lean Combustor, Airflow Splits for Gas Fuel Testing	6-2
6-2	Rich Stage Boundary Layer Trip Wire, Concept 2	6-4
6-3	Multiple-Nozzle Dome Rich-Lean Combustor, Concept 2	6-5
6-4	Concept 2, Rich-Lean Combustor with Flow Sleeve	6-7
6-5	Concept 2, Outer Gas Fuel Nozzle Design, Gas Tip Detail	6-10
6-6	Modifications to Concept 2, Combustor Center Gas Fuel Nozzle	6-11
6-7	Center Fuel Nozzle for Rich-Lean Combustor, Concept 2	6-13
6-8	Center Fuel Nozzle for Rich-Lean Combustor, Concept 2	6-14
6-9	Center Fuel Nozzle Calibration, Concept 2	6-15
6-10	Typical Outer Fuel Nozzle Calibration, Concept 2	6-16
6-11	Concept 4 Lean-Lean Combustor, Airflow Splits for Gas Fuel Testing	6-17
6-12	Concept 4, Pilot Gas Fuel Nozzle Design	6-18
6-13	Pilot Fuel Nozzle for Lean-Lean Combustor, Concept 4	6-20
6-14	Pilot Fuel Nozzle for Lean-Lean Combustor, Concept 4	6-21
6-15	Gas Fuel Configuration Lean-Lean Combustor, Concept 4	6-23
6-16	Parallel-Staged Lean Reaction Catalytic Combustor, Concept 8	6-26
6-17	Catalytic Combustor Pilot Stage	6-28
6-18	Catalytic Combustor, Concept 8	6-29
6-19	Reactor Section/Pilot Stage	6-29
6-20	Fuel Schedule, Concept 8 MS7001E-Cycle, 60/40 Airflow Split	6-30
7-1	NO_x Emissions vs. Load for Concept 2	7-13
7-2	NO_x Performance vs. Load, Concept 2 Gas Fuel	7-14

LIST OF ILLUSTRATIONS (Cont'd)

Figure		Page
7-3	NO_x Emissions Comparison for Concept 2 and Lean Burning Combustor	7-15
7-4	NO_x vs. Fuel Ammonia Content, Concept 2	7-17
7-5	NO_x Yield for Concept 2, Gas Fuel with Ammonia	7-18
7-6	Exit Temperature Distribution, Concept 2 at Baseload	7-20
7-7	Exit Temperature Distribution, Concept 2 at Baseload	7-21
7-8	Exit Temperature Distribution, Concept 2 at Baseload	7-22
7-9	Carbon Monoxide Emissions vs. Load for Concept 2	7-24
7-10	Liner Metal Temperatures, Concept 2 Gas Fuel	7-25
7-11	Liner Metal Temperatures, Concept 2 Gas Fuel	7-26
7-12	Liner Metal Temperatures, Concept 2 Gas Fuel	7-27
7-13	Pressure Drop vs. Flow, Concept 2	7-29
7-14	Post-Test Condition of Rich Stage Thermal Barrier Coating Rich-Lean Combustor, Concept 2	7-30
7-15	Reactor Stage NO_x Emissions Index	7-35
7-16	Pilot Stage NO_x Emissions Index	7-35
7-17	Reactor Stage NO_x Emissions Index	7-36
7-18	Pilot Stage NO_x Emissions Index	7-36
7-19	Catalytic Combustor Schematic Thermocouple Locations	7-37
7-20	Catalytic Reactor Thermocouple Locations	7-38
7-21	Exit Temperature Distribution Test Point 3 (92% Load)	7-40
7-22	Exit Temperature Distribution Test Point 5 (~100% Load)	7-42
7-23	Catalytic Reactor Temperatures	7-45
7-24	Post-Test View of Reactor Exit	7-47
7-25	Post-Test View of Pilot Stage	7-47

LIST OF TABLES

Table		Page
4-1	Concept 2: Rich-Lean Combustor Tests LBtu/Btu Fuel Gas Compositions	4-2
4-2	Measured vs. Calculated Ammonia Flow, Concept 2	4-4
5-1	Combustor/Rig Instrumentation	5-25
6-1	Airflow Splits, Concept 2	6-8
6-2	Concept 2, Combustor Equivalence Ratios	6-9
6-3	Concept 4 Flow Splits	6-24
6-4	Concept 4 Combustor Equivalence Ratios	6-25
7-1	Concept 2 Test Data	7-2
7-2	Concept 2 Design Cycle Conditions	7-3
7-3	Concept 8 Catalytic Combustor Test Data	7-33

SECTION 1

ABSTRACT

A Phase IA test program has been completed to assess the emissions performance of a rich-lean combustor (developed for liquid fuels in Phase I) for combustion of simulated coal gases ranging in heating value from 167 to 244 Btu/scf. The 244 Btu/scf gas is typical of the product gas from an oxygen-blown gasifier, while the 167 Btu/scf gas is similar to that from an air-blown gasifier.

Although meeting NO_x goals for the 167 Btu/scf fuel gas, NO_x performance of the rich-lean combustor did not meet program goals with the 244 Btu/scf gas because of high thermal NO_x, similar to levels expected from conventional lean-burning combustors. The NO_x emissions may be attributed to inadequate fuel-air mixing in the rich stage resulting from the design of the large central fuel nozzle delivering 71% of the total gas flow. NO_x generation from NH_3 was significant at ammonia concentrations significantly less than 0.5%. These levels may occur depending on fuel gas cleanup system design. However, NO_x yield from ammonia injected into the fuel gas decreased rapidly with increasing ammonia level, and is projected to be less than 10% at NH_3 levels of 0.5% or higher.

CO emissions, combustion efficiency, smoke and other operational performance parameters were satisfactory.

A test was completed with a catalytic combustor concept with petroleum distillate fuel. Reactor stage NO_x emissions were low (1.4 gms NO_x/kg fuel). CO emissions and combustion efficiency were satisfactory. Air flow split instabilities occurred which eventually led to test termination.

SECTION 2

SUMMARY

General Electric completed the Phase I program to develop dry low NO_x combustion technology for application to high nitrogen content coal-derived liquid fuels (CDL's). It was shown in the report of that work that two stage rich-lean combustor Concept 2 could meet program emissions goals for CDL's and conventional petroleum fuels. Lean-lean Concept 4 provided ultra low NO_x performance with petroleum distillate fuel. A catalytic combustor was designed and built.

This report covers the results of a Phase IA test program whose objective was to assess the performance of the Phase I combustors with low and intermediate heating value (LBtu and IBtu) coal gases. The specific objective was to provide an initial assessment of the emissions performance with simulated coal gases of rich-lean and lean-lean combustors developed in Phase I, and to identify areas for development in the planned Phase II program.

Tests were conducted for a two stage multinozzle rich-lean combustor, Concept 2, with a range of gas heating values from 167 to 244 Btu/scf at MS7001E cycle conditions. Tests were also completed with NH_3 injected into the fuel gas to determine organic NO_x generation from a potential contaminant in cleaned fuel gases delivered from an oxygen-blown gasification system.

NO_x emissions at 244 and 204 Btu/scf exceeded the program goal, but met the program goal with significant margin for the LBtu fuel at 167 Btu/scf. The high thermal NO_x generation is similar to that produced by a lean-burning combustor and may result from poor rich-stage fuel-air mixing. The central gas fuel nozzle, which delivers 71 percent of the total gas flow, is a low swirl design which concentrates fuel in a rich central jet, and does not produce a

central recirculation zone. Inadequate mixing of fuel and air could lead to burning closer to stoichiometric than desired in a lean annular zone around the rich central core.

NO_x yield from NH_3 added to the fuel gas was found to decrease rapidly with ammonia concentration increases. Extrapolation of test data projects NO_x yields of 10% or less at ammonia concentrations exceeding 0.4%.

Improvement in thermal NO_x performance can be expected with improved rich stage fuel-air mixing achieved via fuel nozzle redesign. However, resource limitations in the Phase IA program precluded modifications and further testing. Aside from NO_x emissions, the rich-lean combustor provided satisfactory performance, with low CO emissions, high combustion efficiency, essentially no smoke, and liner metal temperatures significantly improved over Phase I liquid fuels test results. Hardware durability was very good.

Catalytic combustor Concept 8 was tested with petroleum distillate fuel. NO_x emissions from the reactor stage were approximately 1.4 gms NO_x/kg fuel, i.e. approximately 10 ppmv. CO emissions were low and combustion efficiency high. Pilot stage emissions correlated well with conventional lean-burning combustor experience. The overall NO_x emissions index at 92% load for this parallel-staged combustor design was estimated to be approximately 3.4 gms NO_x/kg fuel, substantially below the 7.0 gms NO_x/kg program goal for clean fuel. However, serious instabilities in flow split between the reactor and pilot stages occurred, as well as an instability in the internal reactor temperature distribution. These utlimately led to overtemperature and failure of the reactor substrate.

Modifications to the successful Phase I lean-lean combustor were designed and built, and the combustor is available for gas testing at the onset of Phase II.

SECTION 3

INTRODUCTION

The projected decline in the availability of petroleum fuels for electricity generation or industrial applications, and the projected increase in and uncertainty of fuel costs throughout the next decade have been driving forces towards the utilization of the nation's coal resources.

Significant effort has been expended and progress achieved in the development of processes to produce coal derived liquid (CDL) and gaseous fuels. Earlier projections were that CDL's could be expected to be available in quantitites suitable for market penetration by the late 1980's. On this basis, development of dry low NO_x combustion technology to meet NSPS emissions standards with high nitrogen content CDL's was the focal point of the Phase I effort in the NASA sponsored Low NO_x Heavy Fuel Combustor Concept Program. General Electric completed its Phase I development tests and reported the results in October 1981. It was demonstrated that the two stage rich-lean combustor concept would meet all program objectives for emissions with satisfactory operational performance. Combustor development addressed two key CDL properties which impact on performance, i.e. low hydrogen content which can promote smoke formation and leads to high radiant heat loadings to liner walls, and high fuel-bound nitrogen (FBN) content which promotes organic NO_x formation in conventional lean-burning combustors. Rich-lean Concepts 2 and 3 addressed these fuel properties, successfully meeting emissions criteria.

More recent trends in national energy policy and fuel economics could lead to deferment of CDL availability to the 1990's. Utilization of coal derived gaseous fuels is now considered the more likely candidate for market introduction in Utility applications. General Electric is strongly involved in

the application of coal derived gases via integrated gasification combined cycle plant studies.

It is now anticipated that Phase II of the NASA sponsored Low NO_x Combustor Program will emphasize dry low-NO_x combustion technology development for low and intermediate Btu heating value coal gases (LBtu, IBtu gases). Under NASA sponsorship, General Electric has completed the Phase IA program to develop combustion technology for LBtu and IBtu gases. The Phase IA program provides a bridge between the low NO_x liquids fuel technology of Phase I and the anticipated emphasis on low NO_x coal-derived gas fuels technology to be developed in Phase II. Phase IA objectives were to provide an initial assessment of the emissions and operational performance of the successful rich-lean and lean-lean combustor concepts developed for liquid fuels in Phase I, and to identify problem areas and development needs to be studied in Phase II. A test of the catalytic combustor hardware developed in Phase I was also planned.

Program resources were minimal, considering the cost of simulated LBtu/IBtu gas fuels, and dictated only minor modifications to the existing Phase I hardware and limited testing. Tests were conducted using rich-lean combustor Concept 2 (a multinozzle two-stage rich-lean design) with a range of gas heating values from 167 to 244 Btu/scf, at MS7001E turbine load conditions. Tests were run largely at reduced pressure conditions to reduce fuel costs. A full-pressure, full-flow test was also completed to provide a correlation of all data to full MS7001E cycle conditions. Ammonia (NH_3) was injected at several rates up to 0.5 weight percent for the 244 Btu/scf fuel gas to determine organic NO_x generation from potential organic nitrogen contaminants in cleaned fuel gases. The catalytic combustor was tested with petroleum

distillate fuel. A lean-lean combustor hardware configuration was developed and fabricated, but was not tested because of limited program resources. This combustor hardware is available for early testing in the anticipated Phase II program.

This report presents the results of the Phase IA program.

SECTION 4

TEST FUELS

Table 4-1 presents test fuel composition data for all test points obtained during this test program. Gas fuel mixtures ranging in lower heating value (LHV) from 167 to 246 Btu/scf were tested. The baseline fuel contained 38.4% H_2, 0.65% N_2, 44.53% CO and 16.43% CO_2 by volume. This fuel is representative of the coal gas produced by the Texaco oxygen blown gasifier under consideration for the Cool Water IGCC demonstration project. Four tube trailers containing this gas were supplied by Union Carbide. The baseline fuel composition given above was obtained by averaging the analyses supplied by Union Carbide for each trailer. The trailers were connected in parallel to supply the test stand fuel requirements.

Variations in fuel composition and heating value were obtained by adding nitrogen as a diluent to the baseline fuel using the General Electric Co. Gas Turbine Development Laboratory LBtu/IBtu gas fuel blending system (Report Section 5.1). The lowest heating value fuel tested (approximately 170 Btu/scf) is representative of the low Btu fuel produced by an air blown coal gasifier such as the General Electric GEGAS gasifier system installed and operating at the GE Corporate Research and Development Center (CR&DC).

Five data points were taken with ammonia (NH_3) added to the baseline fuel (244 Btu/scf) to determine the NO_x yield for the rich-lean combustor operating with various levels of fuel bound nitrogen. In order to make an accurate determination of the ammonia content in the fuel gas during these tests, bottled fuel gas samples were taken at each data point and later analyzed for composition. The samples were analyzed for H_2, O_2, N_2, CO,

Table 4-1

CONCEPT 2: RICH-LEAN COMBUSTOR TESTS
LBTU/IBTU FUEL GAS COMPOSITIONS

Test Point	3A	3B	3C	4	5	6A	7	7A	8	9	11	12
H_2 (Vol %)	38.4	38.4	38.4	38.4	38.4	38.4	31.96	32.87	34.55	31.95	26.24	26.90
O_2 (Vol %)	0	0	0	0	0	0	0	0	0	0	0	0
N_2 (Vol %)	0.65	0.65	0.65	0.65	0.65	0.65	17.31	14.96	10.62	17.33	32.10	30.40
CO (Vol %)	44.53	44.53	44.53	44.53	44.53	44.53	37.06	38.12	40.06	37.05	30.43	31.20
CH_4 (Vol %)	0	0	0	0	0	0	0	0	0	0	0	0
CO_2 (Vol %)	16.43	16.43	16.43	16.43	16.43	16.43	13.68	14.06	14.78	13.67	11.23	11.51
NH_3 (Vol %)	0	0	0	0	0	0	0	0	0	0	0	0
Mol. Wt.	20.65	20.65	20.65	20.65	20.65	20.65	22.20	22.00	21.61	21.21	23.43	23.30
LHV (Btu/scf)	244.4	244.4	244.4	244.4	244.4	244.4	203.4	209.2	219.9	203.3	167.0	171.2
Fuel Temperature (°F)	416	420	422	418	420	422	422	423	417	421	424	421

Test Point	13	16	17	18	18A	18B	18C
H_2 (Vol %)	26.54	37.2	37.9	37.3	37.4	37.8	38.4
O_2 (Vol %)	0	0.17	0.14	0.18	0.11	0.13	0
N_2 (Vol %)	31.35	0.59	0.61	0.58	0.62	0.57	0.65
CO (Vol %)	30.77	44.5	44.3	44.7	44.1	44.9	44.53
CH_4 (Vol %)	0	0.18	0.17	0.18	0.17	0.18	0
CO_2 (Vol %)	11.35	16.50	16.50	16.70	16.60	16.8	16.43
NH_3 (Vol %)	0	0.45	0.50	0.32	0.11	0.07	0
Mol. Wt.	23.37	20.79	20.75	20.91	20.65	20.96	20.65
LHV (Btu/scf)	168.9	242.7	243.8	243.6	241.9	245.6	244.4
Fuel Temperature (°F)	424	405	407	409	409	410	410

ORIGINAL PAGE IS
OF POOR QUALITY

CH_4 and CO_2 using a Hewlett-Packard 5700 gas chromatograph. Ammonia analyses were performed by infrared using a Nicolet FTIR. Results of the analyses are presented in Table 4-1 for data points 16, 17, 18, 18A and 18B (test points for rich-lean combustor Concept 2, Table 7-1). Fuel ammonia level ranged from 0.07% to 0.5% by weight. The actual level of ammonia encountered in coal gas fuels in an IGCC application would be a function of the specific fuel gas cleanup system design. The range of ammonia injection tested was, therefore, selected to be representative of potential IGCC plant conditions.

Ammonia injection rates were measured during the test using a metering orifice. However, difficulty was encountered during the test in maintaining the ammonia temperature level high enough to insure that all the ammonia was in the vapor state at the metering orifice. Therefore, NH_3 flows measured by on-line metering are somewhat uncertain.

Using the measured total gas fuel flow and the fuel composition obtained from analysis of on-line gas samples, ammonia flow rate was calculated for each data point. Table 4-2 presents a comparison of measured and calculated ammonia flow rates. Since metered values are uncertain due to the temperature problem mentioned above, the calculated values have been used in all subsequent data evaluation.

Equilibrium flame temperature and composition analyses were performed for three fuel compositions (244 Btu/scf, 209 Btu/scf and 172 Btu/scf LHV) which were the nominal gas heating values for the test progrm. These calculations were performed using the NASA Chemical Equilibrium Code (Ref. 1). Results of these analyses are presented in Figures 4-1, 4-2, and 4-3. As seen in Table 4-1, some deviation from the nominal compositions occurred when blending nitrogen to reduce the fuel heating value. However, composition control was

Table 4-2

MEASURED VS. CALCULATED AMMONIA FLOW, CONCEPT 2

Test Point	Total Fuel Flow kg/sec	Total Fuel Flow lb/sec	Measured[1] NH_3 Flow kg/sec	Measured[1] NH_3 Flow lb/sec	Wt %[2] NH_3 in Fuel	Calculated[3] NH_3 Flow kg/sec	Calculated[3] NH_3 Flow lb/sec
16	0.233	0.512	0.0009	0.0020	0.368	0.0009	0.0019
17	0.351	0.773	0.0015	0.0033	0.410	0.0015	0.0032
18	0.391	0.864	0.0014	0.0030	0.261	0.0010	0.0023
18A	0.375	0.825	0.0009	0.0020	0.091	0.0004	0.0008
18B	0.378	0.832	0.0005	0.0010	0.057	0.0003	0.0005

(1) by metering orifice in the ammonia supply line

(2) by analysis of on-line fuel gas/NH_3 samples

(3) NH_3 flow predicted from product of on-line gas sample analyses and measured fuel gas flow

ORIGINAL PAGE IS
OF POOR QUALITY

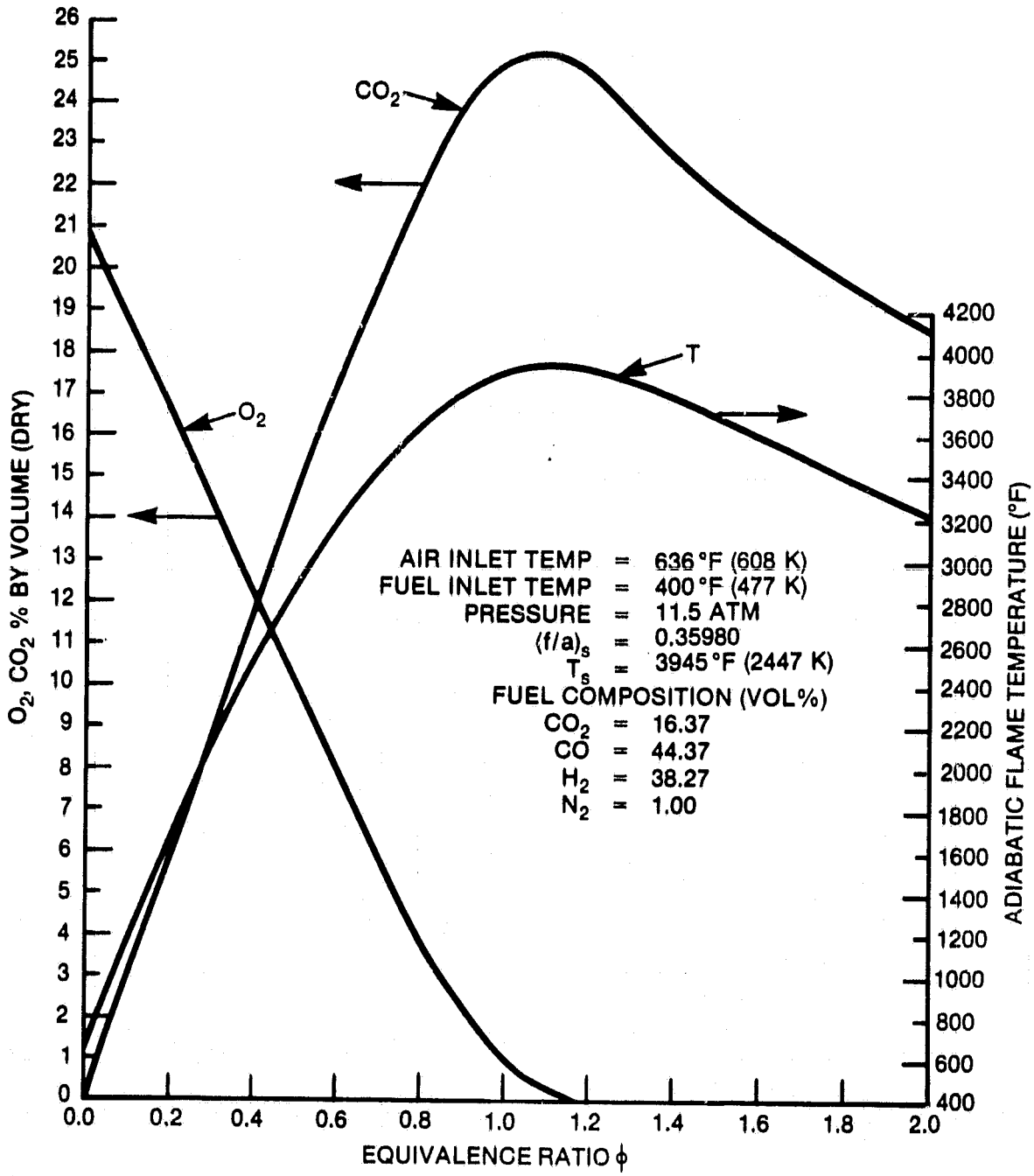

Figure 4-1
NASA EQUILIBRIUM DATA FOR COMBUSTION OF 244 BTU/SCF GAS

ORIGINAL PAGE IS
OF POOR QUALITY

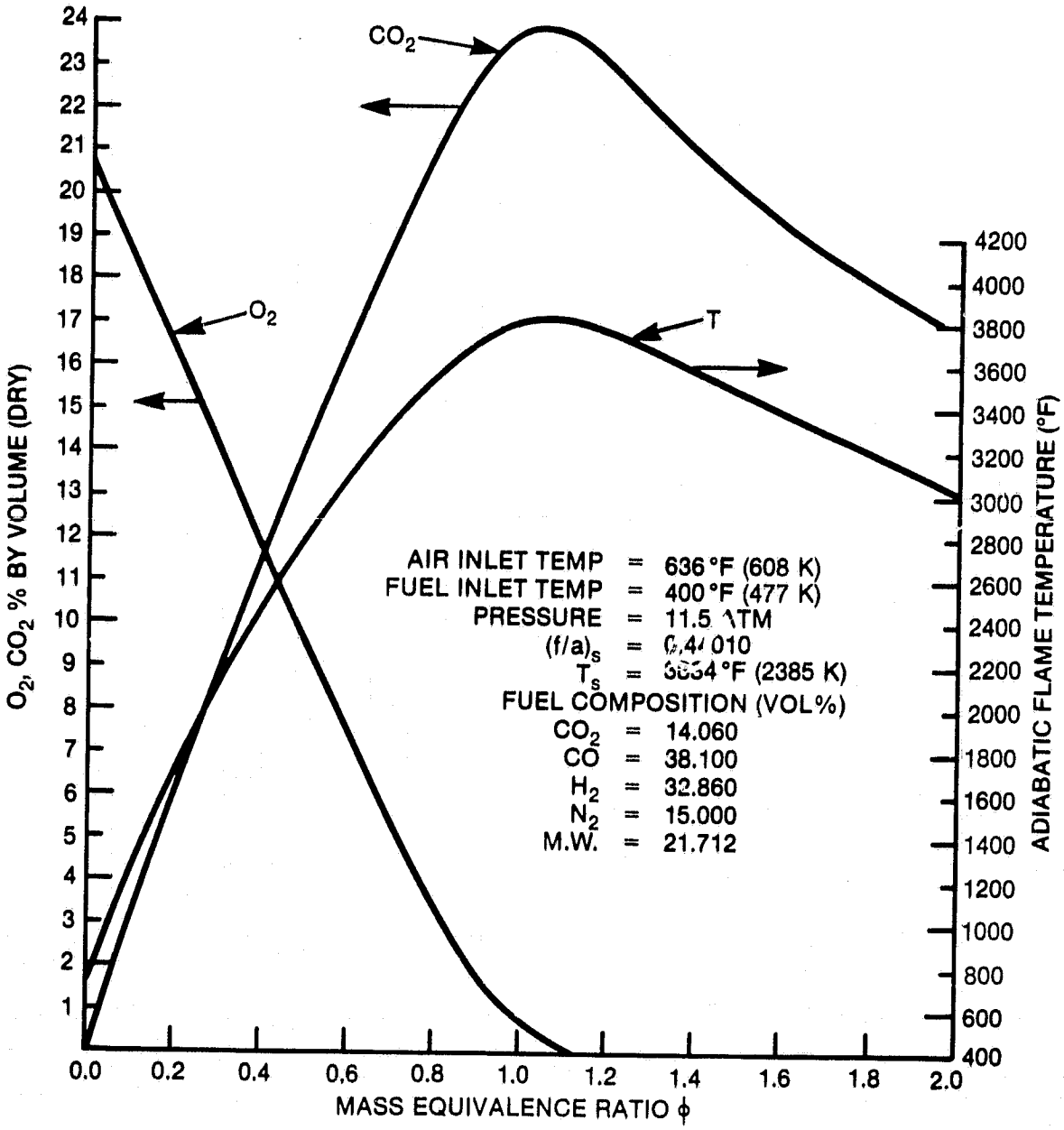

Figure 4-2
NASA EQUILIBRIUM DATA FOR COMBUSTION OF 209 BTU/SCF GAS

ORIGINAL PAGE IS
OF POOR QUALITY

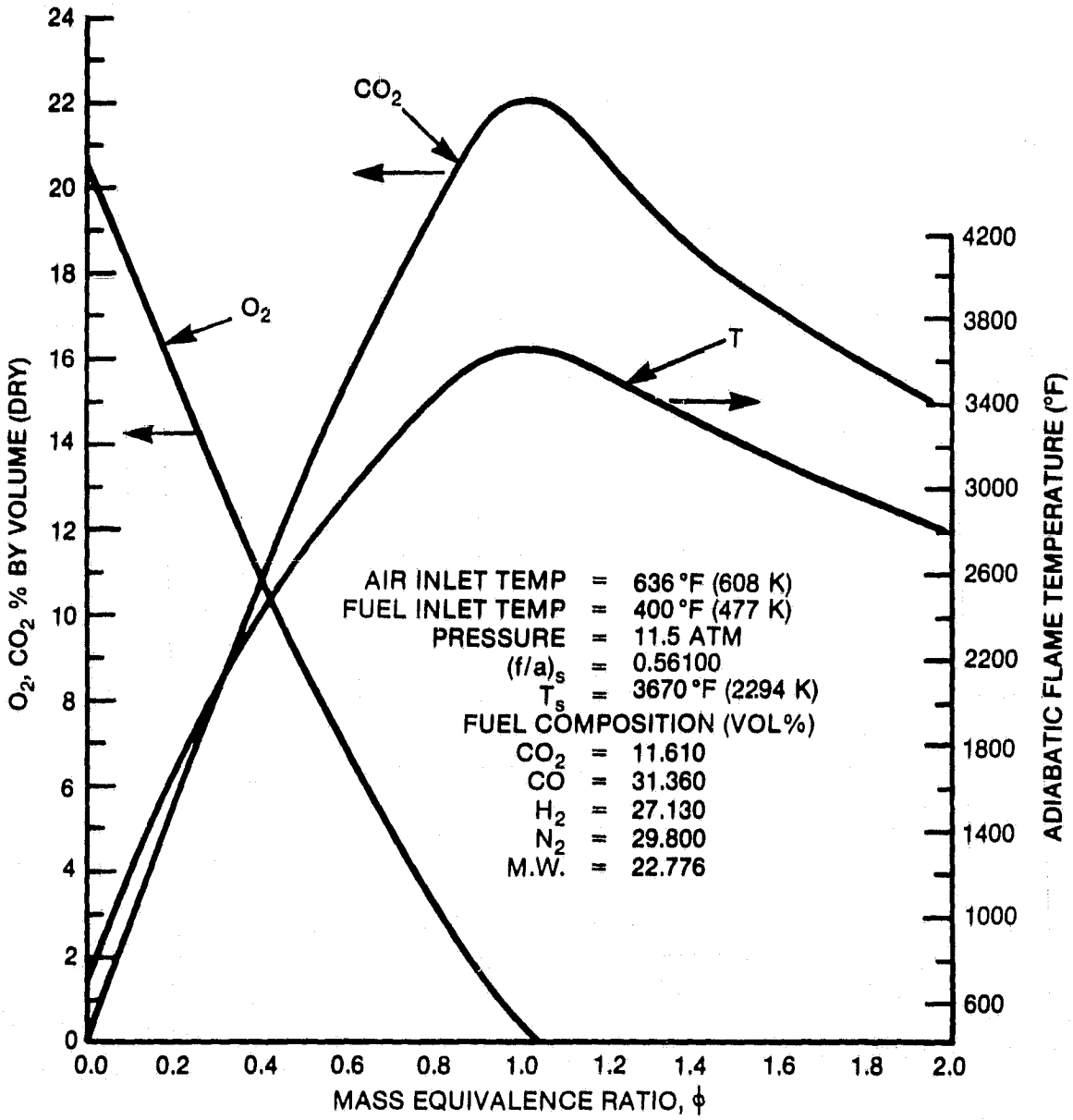

Figure 4-3
NASA EQUILIBRIUM DATA FOR COMBUSTION OF 172 BTU/SCF GAS

adequate for test purposes. Fuel temperature measured at the gas manifold varied from 480°K (405°F) to 491°K (424°F) versus a design value of 477°K (400°F). This fuel temperature was selected to be representative of typical IGCC plant designs.

REFERENCES

1. Gordon, S. and McBride, J. "Computer Program for Calculation of Complex Equilibrium Compositions, Rocket Performance, Incident and Reflected Shocks, and Chapman-Jouquet Detonations," NASA, Report #SP-273, 1971.

SECTION 5

TEST FACILITIES

Combustor tests with liquid fuels in the Phase I program were conducted in a specially designed 25.4 cm (10-inch) diameter test rig, in the A5 facility of General Electric's Aircraft Engine Group (AEG) facility in Evendale, Ohio. For the Phase IA gas tests discussed in this report, combustor tests with simulated coal-derived LBtu/IBtu gases were conducted with that test rig installed in the combustor test area of the General Electric Gas Turbine Development Laboratory (GTDL) facilities in Schenectady, New York. This facility has a unique capability for on-line blending and delivery of simulated coal-derived gases, blending with nitrogen and steam to adjust gas heating values, and gas preheat for large scale combustor testing.

The test rig was modified for delivery of fuel gas, adapted for interface with GTDL test stand hardware, and installed in test stand No. 4.

5.1 TEST FACILITIES AND FUEL SYSTEMS

The combustor test area is a large bay which currently contains five test stands or test ducts. Figure 5-1 is an overview of the bay showing test stands 1 through 4. Figure 5-2 is a closeup view of test stands 3 and 4. Each test stand is designed to accommodate the full-scale combustion system parts of each of the gas turbines in General Electric's product line.

The internal geometry of test stand 4 is a one-tenth sector duplicate of the internal geometry of the gas turbine combustion section. Note in Figure 5-2 that this includes a duplicate of the gas turbine compressor discharge

ORIGINAL PAGE
BLACK AND WHITE PHOTOGRAPH

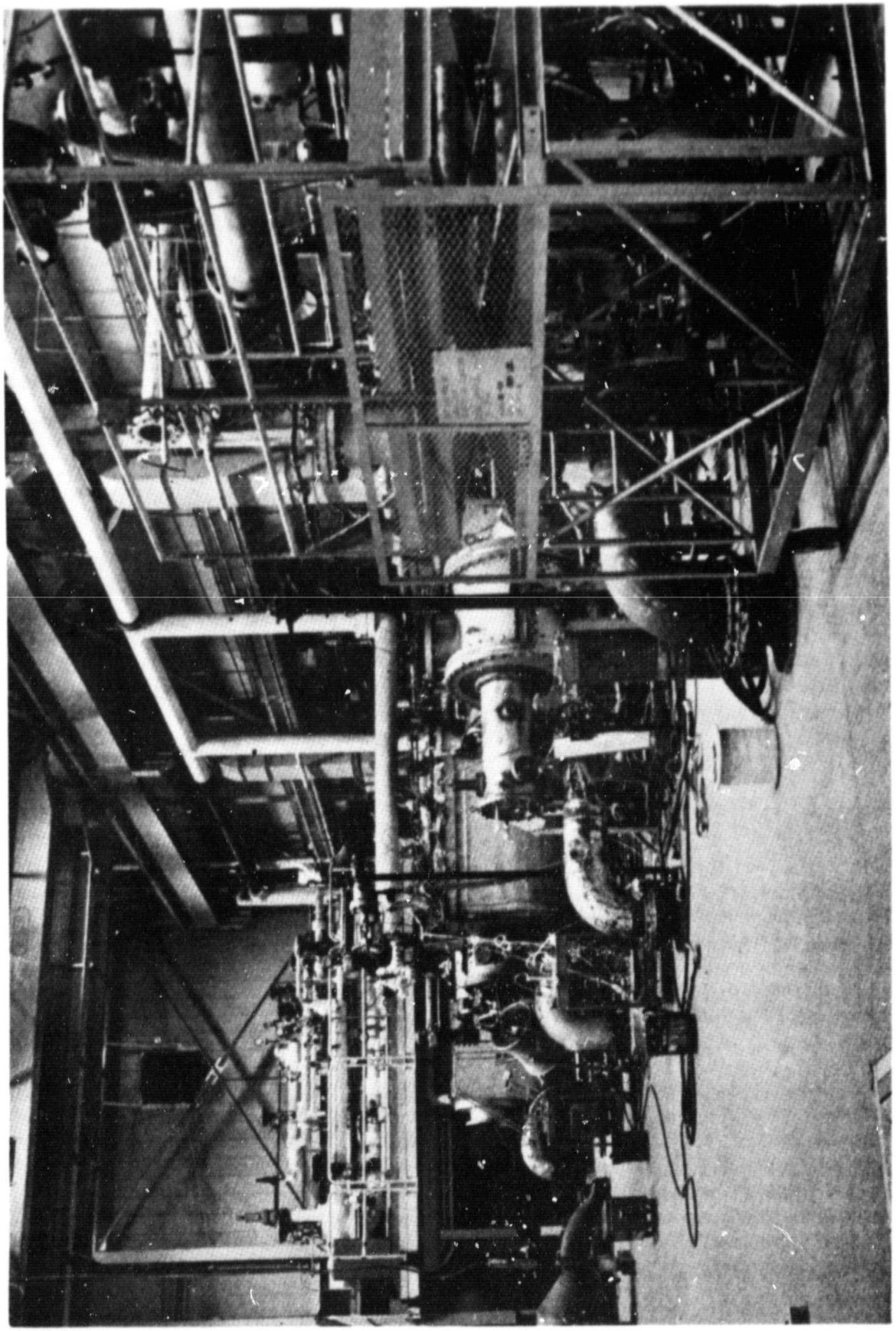

FIGURE 5-1
COMBUSTOR TEST BAY

ORIGINAL PAGE
BLACK AND WHITE PHOTOGRAPH

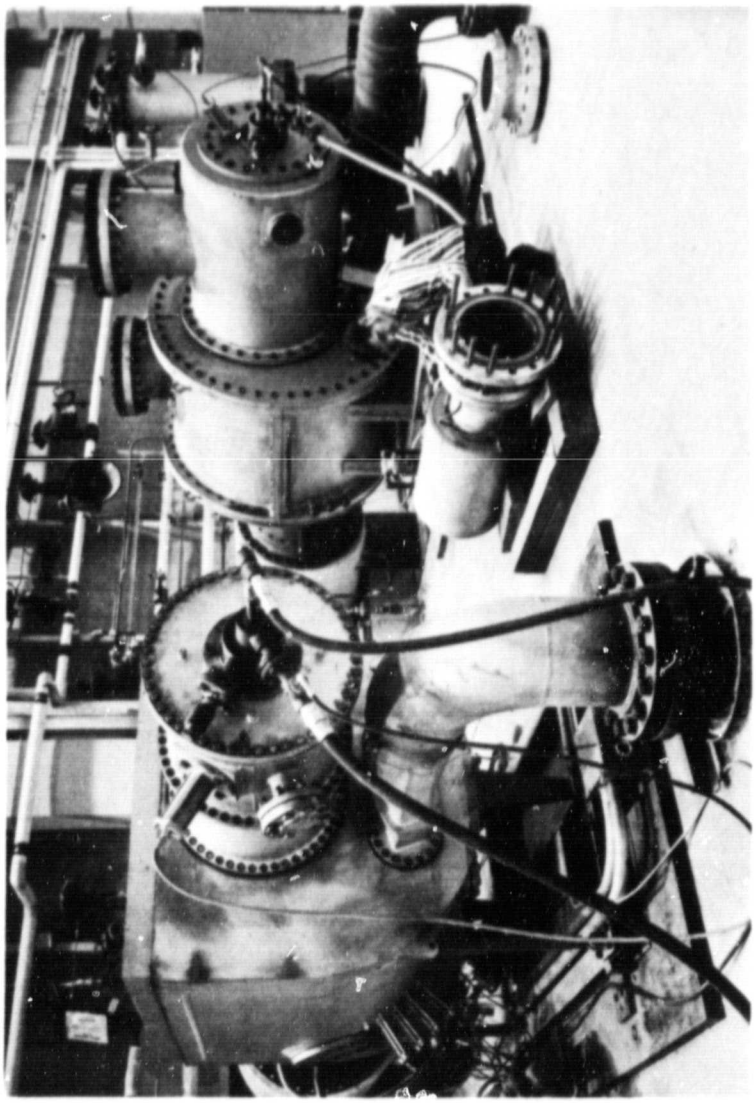

FIGURE 5-2
TEST STANDS 3 (LEFT) AND 4

annular passage shape. The 5 cm (2 inch) pipe flange (inclined 18° downward from the horizontal) also contains half of a crossfire tube. The igniter (directly above the crossfire pipe) and the fuel nozzle (in the center of the large end flange) are actual production parts. It is General Electric's experience that the flow field in this test stand is essentially the same as that in the gas turbine. Figure 5-3 is a schematic of test stand 4. Tests are usually done with an instrumented nozzle box (Figure 5-4) at the location of the first-stage nozzle in the gas turbine. This instrumentation section contains a total of nine temperature rakes (Figure 5-5), with seven thermocouples per rake, to give the necessarily detailed measurement of the turbine section inlet temperature profile in two dimensions.

For the combustor tests with coal-derived gases described in this report (Section 7), test stand 4 was removed and replaced by the 25.4 cm (10 inch) diameter test rig used for the Phase I liquid fuel tests. That test stand and combustor instrumentation are fully described in the Phase I Final Report of the liquid fuel tests. The test rig was connected directly to the blast gate and exhaust section of the test stand using an adapter section. Air supply from the facility was similarly adapted to the entrance of the test rig.

The Gas Turbine Development Laboratory's process air system contains two electrically driven centrifugal compressors that can be operated individually or in series, depending upon the requirements. Figure 5-6 is a schematic drawing of the laboratory's air system showing compressors, control valves (CV), isolation valves (IV), intercoolers, and flow measurement sections. The larger compressor, designated 2MCL1006 in Figure 5-6, consists of two three-stage sections with intercooling. The smaller compressor, designated 2MCL454 in Figure 5-6, has two two-stage sections with intercooling between stages.

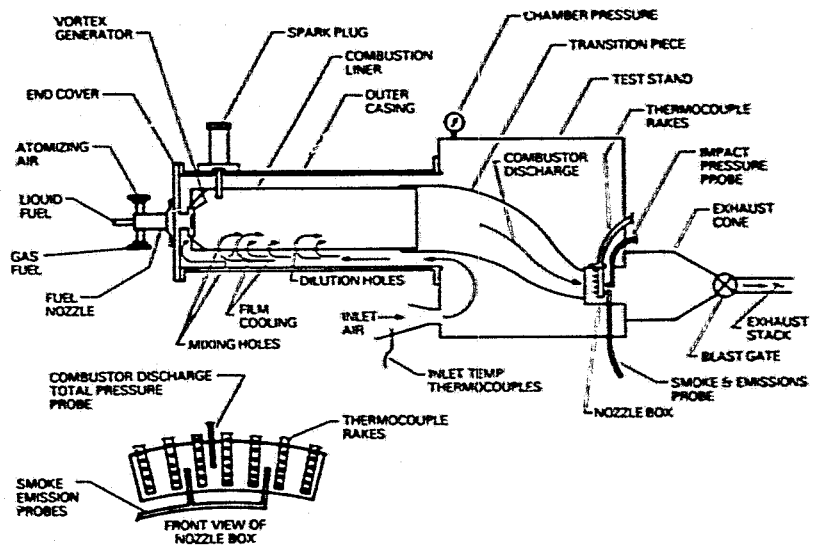

FIGURE 5-3
COMBUSTION TEST STAND (SCHEMATIC DIAGRAM)

ORIGINAL PAGE IS OF POOR QUALITY

ORIGINAL PAGE
BLACK AND WHITE PHOTOGRAPH

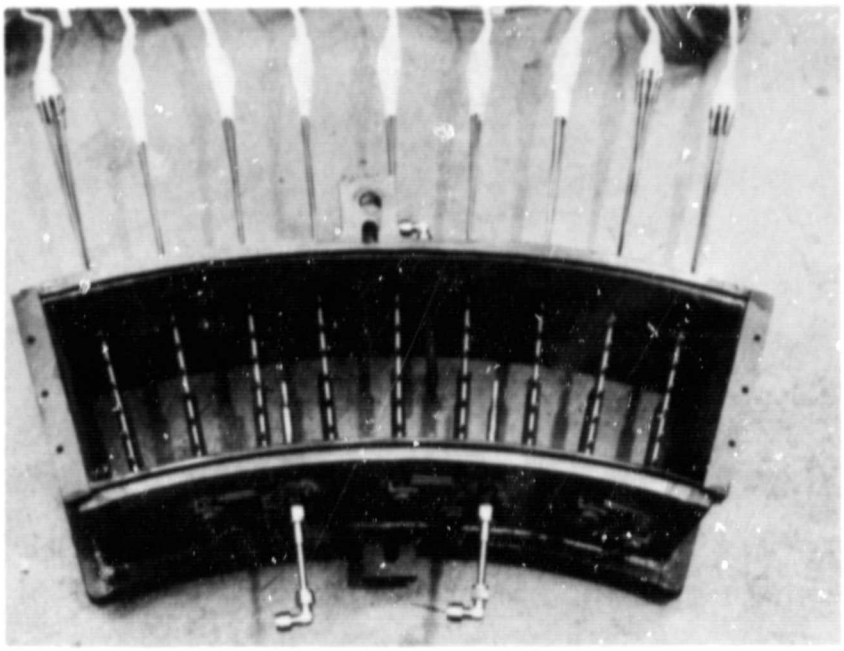

FIGURE 5-4
INSTRUMENTED NOZZLE BOX

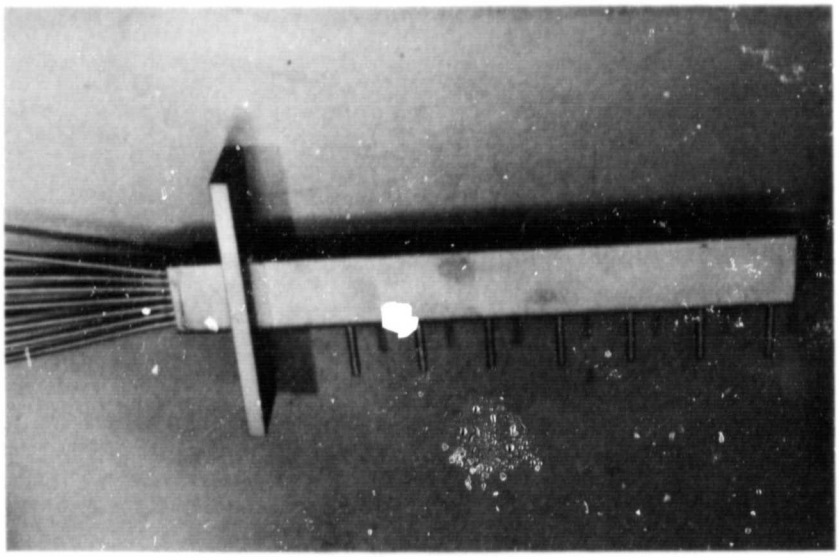

FIGURE 5-5
COMBUSTOR DISCHARGE TEMPERATURE THERMOCOUPLE RAKE

ORIGINAL PAGE IS
OF POOR QUALITY

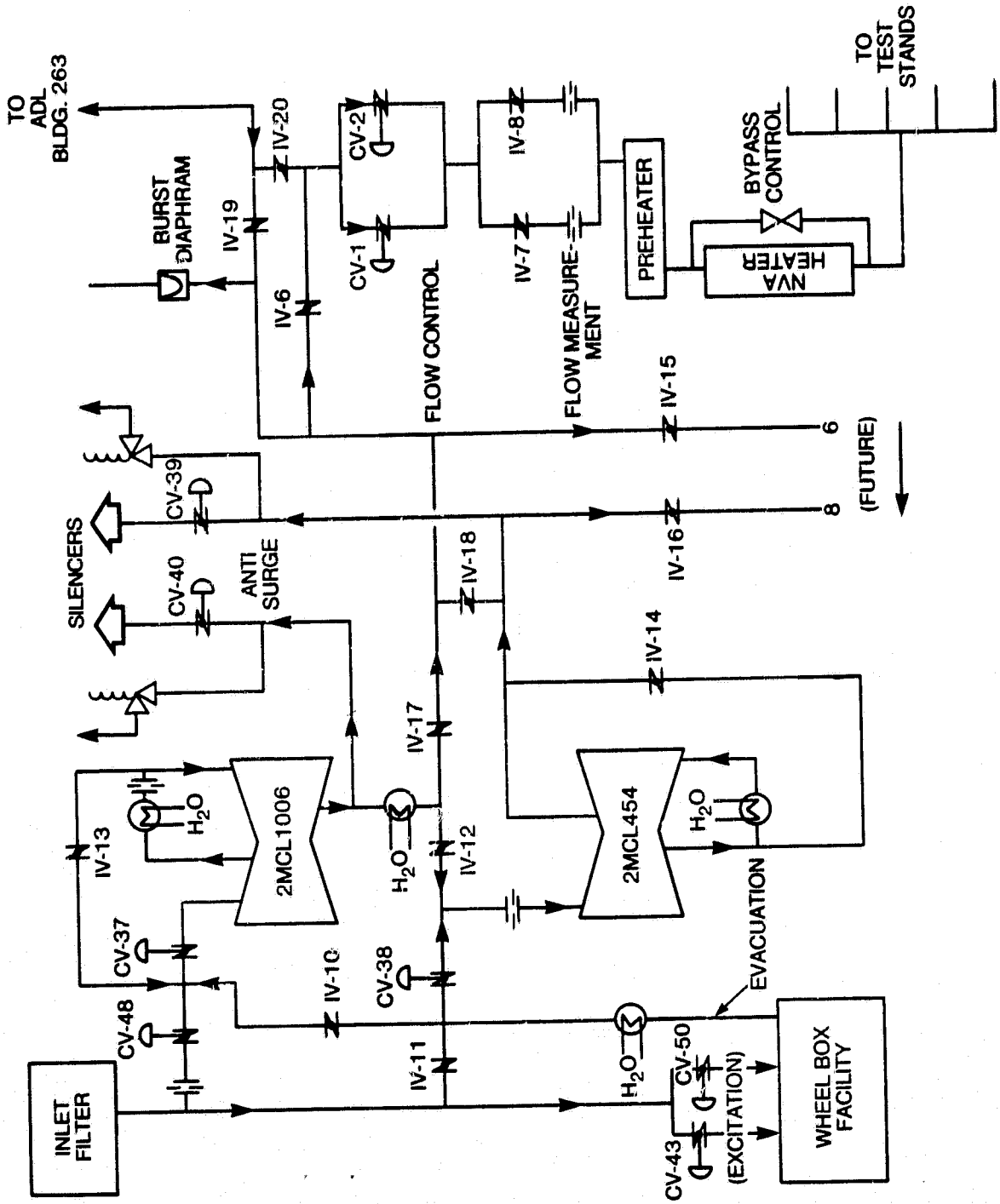

FIGURE 5-6
PROCESS AIR SYSTEM (SCHEMATIC DIAGRAM)

The process air system is very flexible. It can deliver non-vitiated air to the test stands with:

- Mass flow rate from 0.5 kg/sec (1 lb/sec) to 22.7 kg/sec (50 lb/sec).
- Pressure from slightly beyond 1 atm to greater than 10 atm.
- Temperature from slightly beyond ambient temperature to greater than 645°K (700°F).

Atomizing air is provided to the fuel nozzle from a motor-driven reciprocating compressor that draws from the main process air system and increases pressure up to three times the pressure in the combustor. Independent and automatic ratio control are provided in the control room described below.

Air flow rates are measured using orifice sections in the main air piping. Depending on the rate, the air is routed through either a 15 cm (6 inch) or 30 cm (12 inch) air line. Pressure transducers are used to measure the pressure drop, and thermocouples are used to measure air temperature. The raw data signals are fed directly to the on-line data acquisition system and interfaced with a computer to calculate mass flow rates for each test point. The data acquisition and reduction system is also described below.

The laboratory has five fuel systems: distillate fuel, residual fuel, special fuel, propane gas, and simulated coal-derived gas. Distillate fuel is stored in a 25,000 gallon tank. A forwarding pump is used to supply a high-pressure boost pump which, in turn, delivers fuel to the test stand at rates to 20 gpm at 10.3 MPa (1500 psi). The flow rate is controlled by varying the pump bypass valve. The liquid flow rate is measured with a turbine flow meter located near the test stand.

A schematic of the low Btu/intermediate Btu (LBtu/IBtu) gas system used for the Phase IA tests is shown in Figure 5-7. Gas is supplied in tube trailers (up to four trailers at 100,000 scf per trailer) and can be blended on-line with nitrogen and steam to obtain the desired low Btu gas composition and heating value. N_2 and H_2O control is achieved via ratio control stations that maintain the desired proportions of N_2 and/or H_2O to trailer gas. The blending capability has the advantage of reducing the amount of gas that must be supplied in trailers when studying air-blown gases. This capability also permits parametric studies of effects of N_2 or H_2O dilution on the combustion characteristics of coal derived gases.

Currently a gas heating system is provided for fuel gas preheat that is capable of achieving gas temperatures up to approximately 590°K (600°F). Additional heaters are to be installed that will extend this capability.

Ammonia (NH_3) was injected into the fuel gas during tests of the rich-lean combustor with 244 Btu/scf heating value gas. The ammonia injection system is shown schematically in Figure 5-8. The ammonia was injected into the fuel gas supply line approximately five meters (seventeen feet) upstream of the fuel gas manifold supplying the test rig. The ammonia was supplied by three cylinders of NH_3 connected in parallel. The cylinders were wrapped with electrical heating blankets to increase the gas temperature to 327°K (130°F). This resulted in a gas supply pressure of 2.34 MPa (325 psig). Approximately 5 meters of the NH_3 supply line was insulated and steam traced prior to the measureing section. The measuring section consisted of an orifice with ΔP taps, upstream pressure tap, and thermocoules. An electrically operated control valve upstream of the measuring system was used to control the NH_3 flow.

ORIGINAL PAGE IS
OF POOR QUALITY

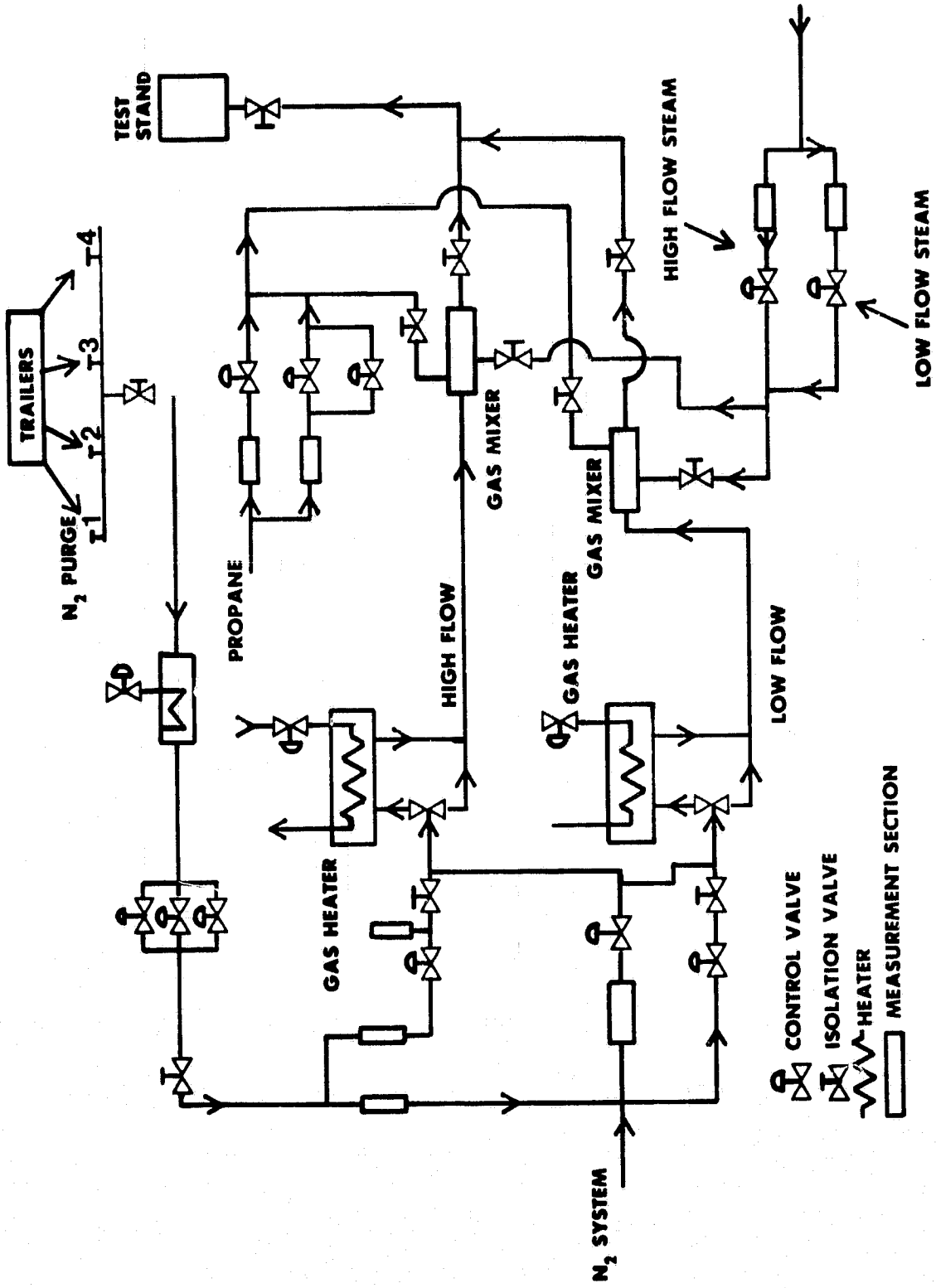

FIGURE 5-7
FLOW SCHEMATIC OF LBTU/IBTU GAS SYSTEM

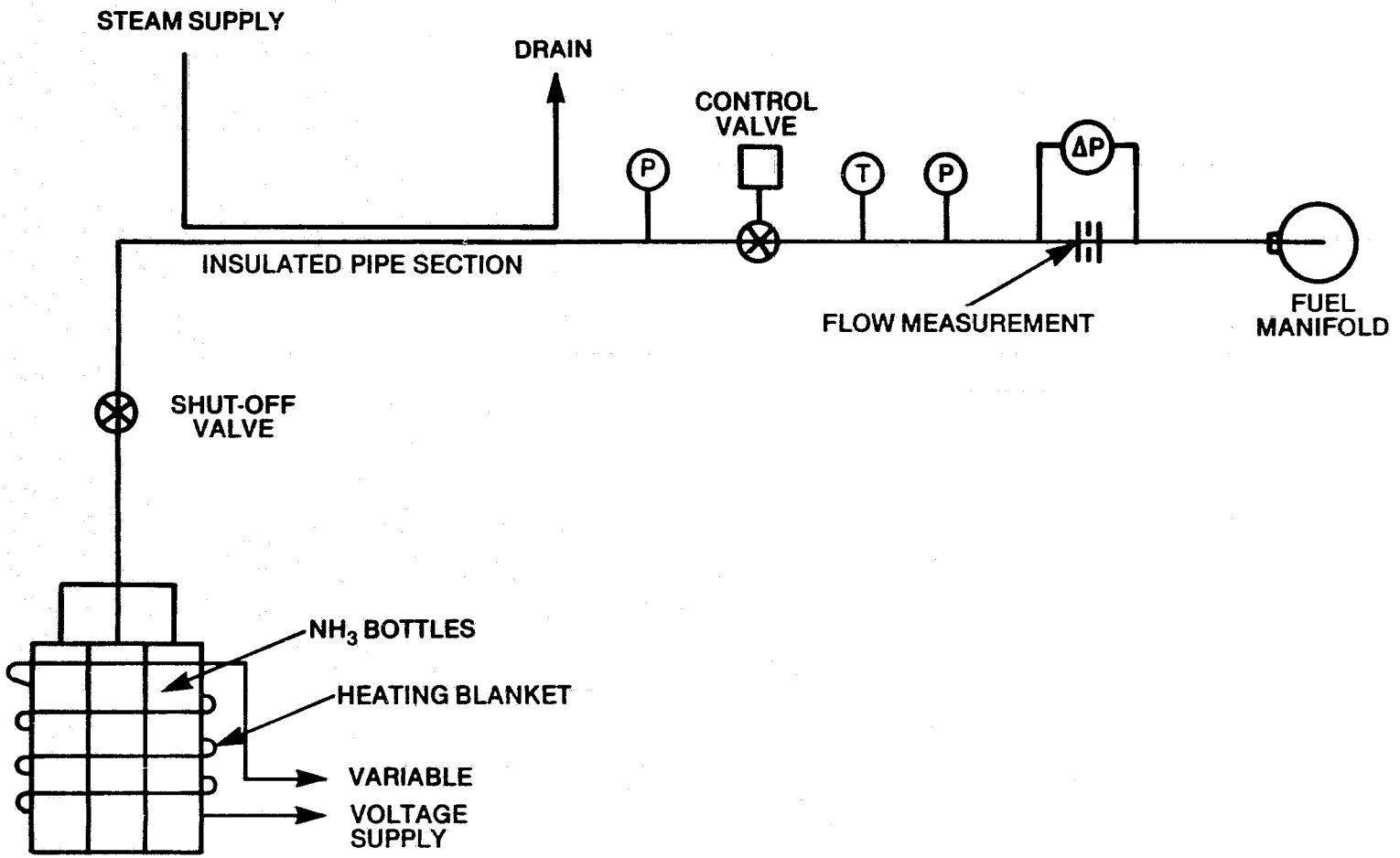

Figure 5-8
AMMONIA INJECTION SYSTEM

ORIGINAL PAGE IS OF POOR QUALITY

In addition to the on-line measurement of NH_3 flow, fuel gas samples were taken at the test rig fuel manifold. These samples were analyzed to determine the fuel gas composition and ammonia content.

5.2 DATA ACQUISITION AND EMISSIONS MEASUREMENT SYSTEMS

The control room is centrally located and services all of the test stands remotely. In addition to the test stand controls, it contains the on-line data acquisition and reduction system (Figure 5-9), the compressor controls and the on-line emission measurement console (Figures 5-10 and 5-11), plus ample space for the extra data acquisition or reduction equipment sometimes needed for special tests.

Figure 5-12 is a schematic of the computer data acquisition and reduction system. The system is under the control of a digital computer under a real-time executive software system. This is a powerful software system that supports "Foreground" and "Background" operations simultaneously. For example, one or more tests can run in real-time in "Foreground" while program development or data reduction operations are taking place in "Background". The software provides for swapping programs in and out of the core from the moving head disc mass storage device. The system is also supported by a nine-track digital magnetic tape recorder. The removable disk cartridges and the magnetic tape provide unlimited off-line storage.

The measurement subsystem handles 1000 input channels of either ac or dc voltages or frequency signals. The digital voltmeter (A to D converter) is a high resolution unit capable of handling low-level millivolt signals as those from thermocouples. The display subsystem has two storage-type oscilloscopes

ORIGINAL PAGE
BLACK AND WHITE PHOTOGRAPH

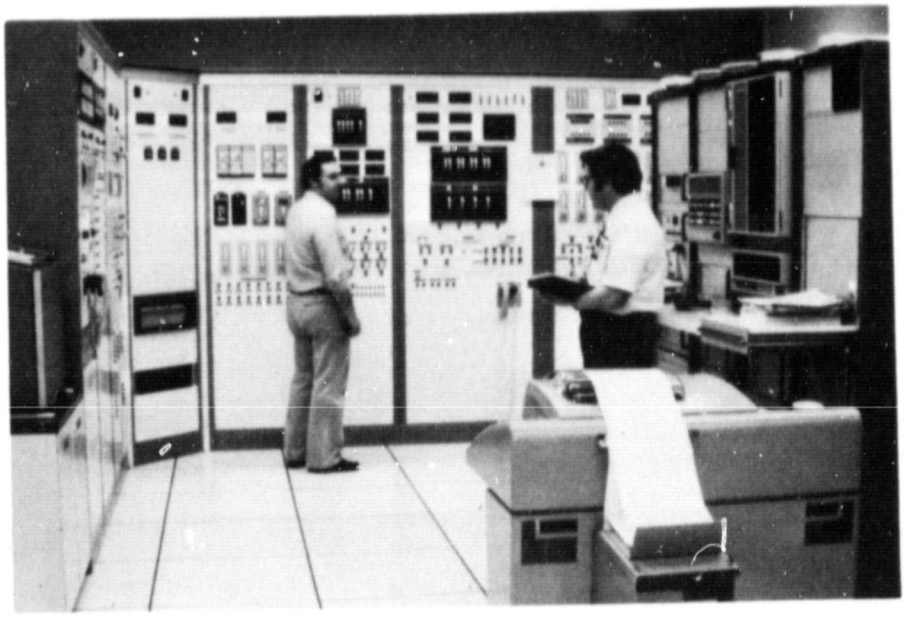

FIGURE 5-9
DATA ACQUISITION AND REDUCTION SYSTEM AND
TEST STAND CONTROL PANEL

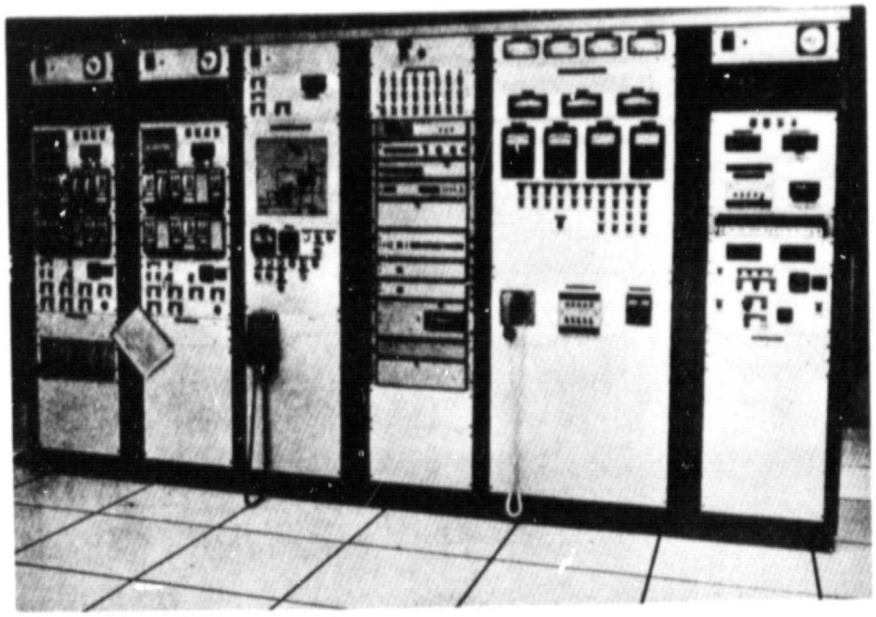

FIGURE 5-10
AIR COMPRESSOR OPERATOR'S CONTROL PANEL

ORIGINAL PAGE
BLACK AND WHITE PHOTOGRAPH

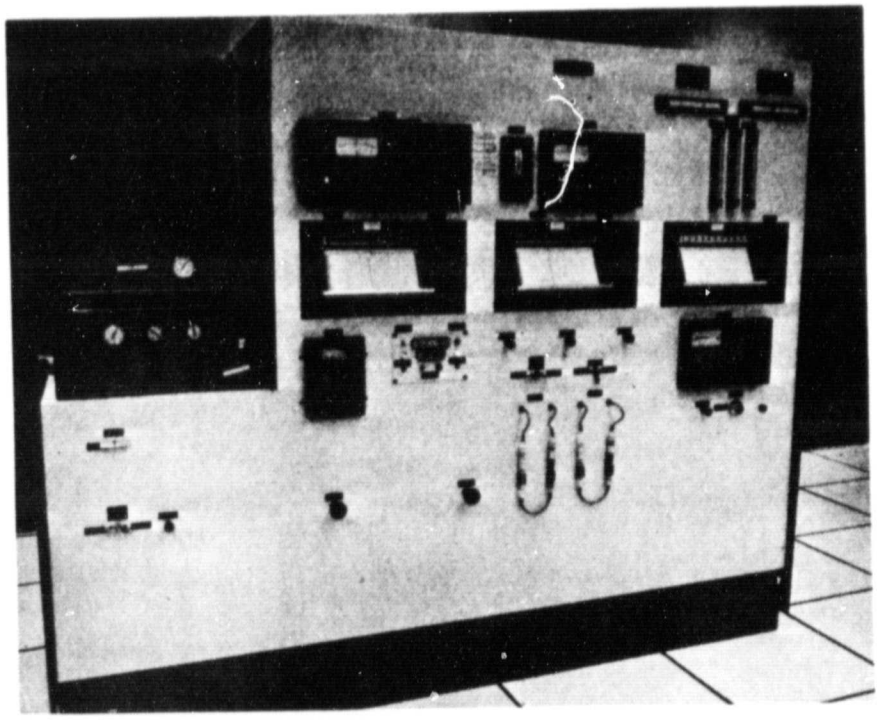

FIGURE 5-11
ON-LINE EXHAUST EMISSION CONSOLE

ORIGINAL PAGE IS
OF POOR QUALITY

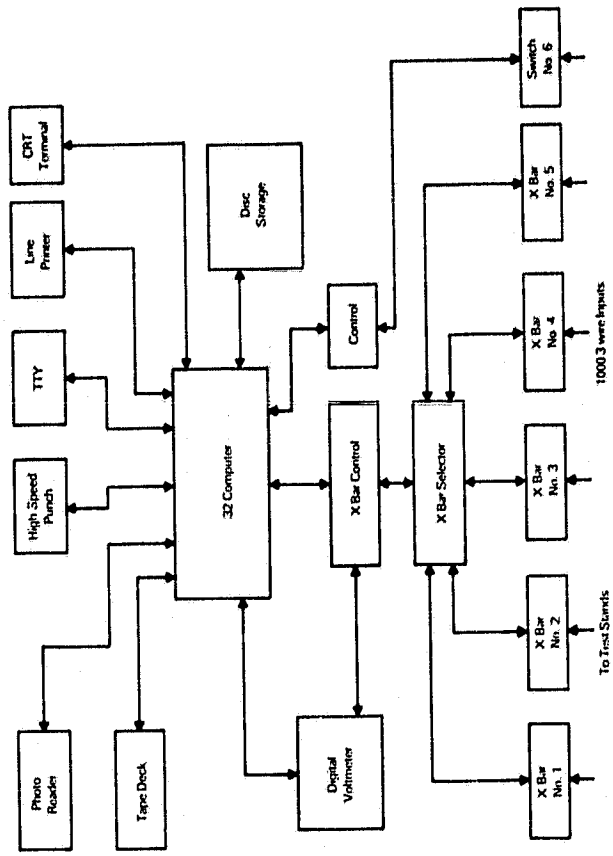

FIGURE 5-12
COMPUTER DATA ACQUISITION AND REDUCTION SYSTEM
(SCHEMATIC DIAGRAM)

ORIGINAL PAGE IS
OF POOR QUALITY

for displaying data in engineering units as well as for displaying graphs. This digital display is used for general monitoring of the test conditions and for setup. A scope camera is available for recording scope displays. A relay register facilitates driving alarms and on/off type controls based on computed results checked and controlled by the software.

In order to set a test point, the test stand operator adjusts such parameters as fuel flow rate, air flow rate, blast gate position (sets chamber pressure), inlet temperature, and, perhaps, atomizing air pressure ratio. While the operator is setting a point, the computer-controlled data acquisition system is measuring only the limited number of data channels necessary to display the results on the display scope for the operator. Any variables can be selected for this display.

After the test point is set and steady state has been attained, the computer operator changes the switch register on the computer control panel, and the computer measures all of the data channels for the test (a full scan takes seven seconds), reduces it, and stores the reduced data in files on the disc. After a predetermined number of scans (usually three), the disc file is accessed and the data are available for further manipulation, such as applying theoretical corrections, averaging, and/or plotting on either the display scopes or the line printer.

Additional peripheral devices supporting the system are in place. Computer programs are available for a wide variety of measurement and data reduction applications. Data plotting routines permit test results to be plotted on the high-speed line printer.

The system is arranged to acquire and reduce data for all necessary test parameters. The data reduction routinely includes the calculation of fuel-air

ratio as well as the absolute mass flow rates, combustor pressure loss (absolute and percentage), combustion efficiency (both enthalpy and emissions bases), and quantities calculated from the exit temperature measurements as well as the pattern factor. Gas constituent concentrations are measured in the combustor exhaust, and air humidity is also measured at test stand inlet. Exhaust temperature and gas sampling data were provided from the exit thermocouples and sampling probes of the rakes used in the existing AEG 10-inch diameter test rig used for the Phase IA tests.

Gas sampling for emission concentrations measurements is done continuously (the discontinuous smoke sampling is the one exception). The sample is forced through the nozzle of the probe by the pressure differential between the test stand and ambient. The expansion at the nozzle cools the sample and freezes the composition. The sample is then conducted via a short section of stainless steel tubing to a glass fiber filter. The filtered sample is then cooled by a water-jacketed section of tubing to approximately 450°K (350°F). The water flow is controlled from the central console where the exit temperature of the cooler is monitored to ensure that it remains above 435°K (325°F). The sample, maintained at constant pressure by a back pressure regulator, is then conducted via electrically heated stainless steel tubing to the central console. Excess flow is vented to atmosphere. The high flow rate maintained ensures that the sample residence time in the sample liner and the filter is minimized. All materials in contact with the sample are stainless steel or glass.

The emissions measurement console contains two sampling trains: one for the instruments which require a heated, wet sample; and another for the instruments which require a cooled, dry sample (Figure 5-13). The two trains are common through a heated switch box, which connects the console to the

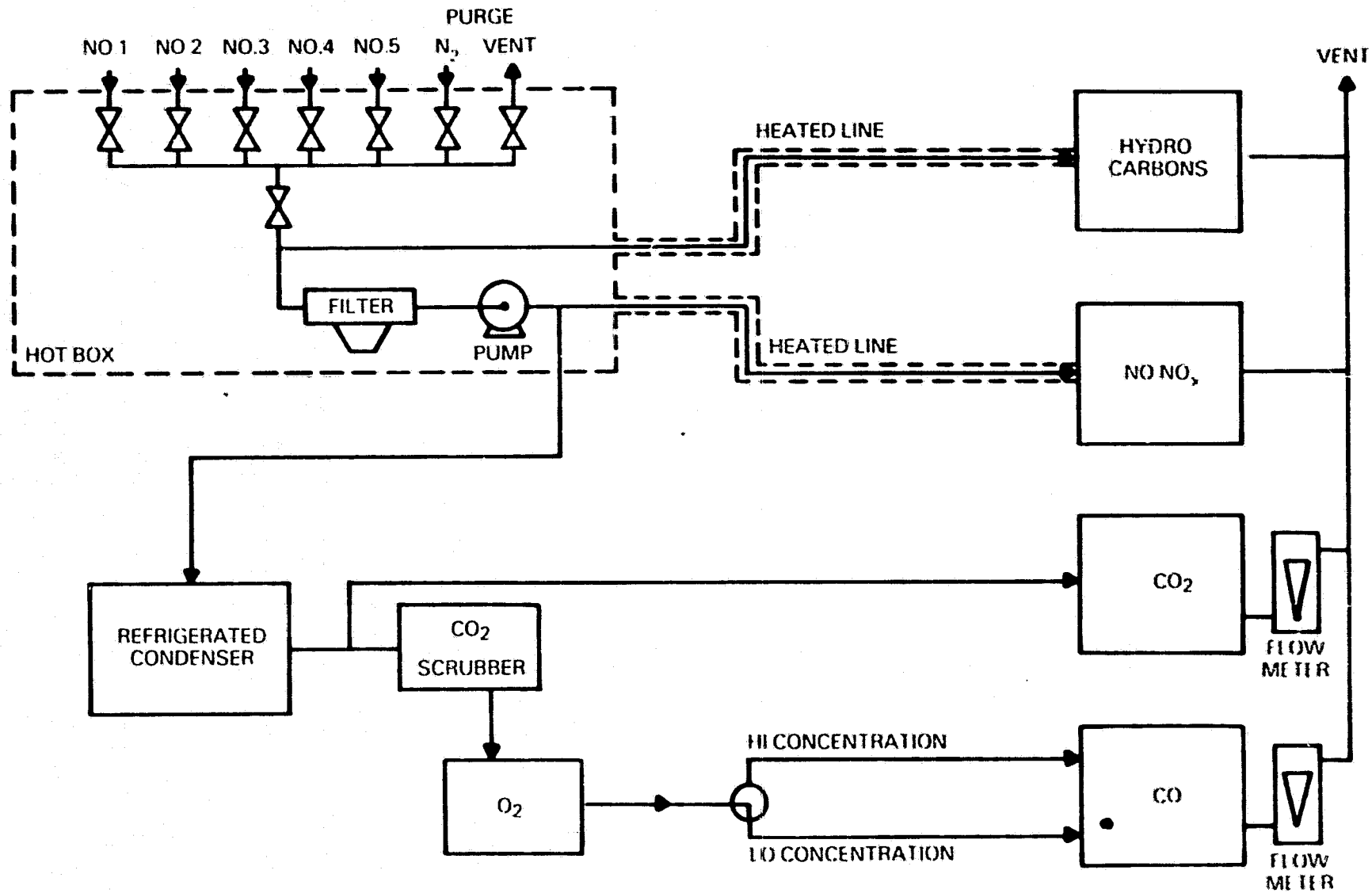

FIGURE 5-13
EMISSION CONSOLE (SCHEMATIC DIAGRAM)

ORIGINAL PAGE IS OF POOR QUALITY

individual stands, and through a heated sampling condition system which consists of glass and sintered metal filters and a heated metal bellows pump. Following the sample condition system, the flows separate. The flow to the nitrogen oxides and total hydrocarbon analyzers is conducted through heated lines (kept at 450°K), while the flow to the nondispersive infrared (NDIR) and oxygen instruments passes through a cooler which controls the dewpoint of the gas to 3°C or lower. The sample to the carbon monoxide instrument is further conditioned by passing through a series of chemical absorbers. The first of these removes the carbon dioxide and the second absorbs the moisture liberated by the first.

The console is designed so that all piping lengths are kept to a minimum. All materials in contact with the sample are stainless steel or Teflon. Eleven (11) flow rates are monitored as are the sample line exit temperatures, the condenser exit temperature, and the sample conditioning system temperature. All instruments are vented to atmosphere to eliminate any pressure variation drifts.

The system contains the following analyzers, all of which are the accepted standard instruments for this service.

- O_2 - Beckman Model F3 Paramagnetic Oxygen Analyzer
- CO - Beckman NDIR Analyzer
- HC - Beckman Model 402 Total Hydrocarbon Analyzer (Heated Oven Flame-Ionization Detector)
- CO_2 - Beckman NDIR Analyzer
- NO,NO_2 - Beckman Chemiluminescence Analyzer (with NO_2 to NO converter)

The calibration and zero gases are conducted to the instrument via Teflon tubing. Selection of the desired gas is made through a system of manual valves so arranged that the hydrocarbon and nitrogen oxides instruments may be checked for zero and calibration drift independently of each other and of the other instruments. The NDIR instruments and the paramagnetic oxygen instrument are calibrated as a group.

Two of the instruments are naturally linear (the NO and O_2 analyzers), and the others contain linearization circuits. Three calibration gas concentrations as well as the zero gas are always available to check the system. The checks are always done at least before, after, and twice during the test. General Electric's standard procedure also includes checks of the efficiency of the NO_2 to NO converter as well as assessments of a number of other potential problem areas.

5.3 TEST RIG

All Phase IA gas testing was completed with the 25.4 cm (10-inch) diameter test rig used for the Phase I liquid fuel tests, modified for introduction of gas fuels, and adapted to interface with the GTDL test stand. Figure 5-14 is a photo of the test rig installed in test stand 4. The square piping array in the foreground is the fuel gas delivery manifold supplying the small gas-only fuel nozzles described in Section 6 of this report. The test rig itself is immediately downstream of this fuel gas manifold, and may be seen more clearly in Figure 5-15. The small tubing from the gas manifold delivers fuel gas to the eight small gas-only fuel nozzles in the dome end of the rich-lean combustor. The vertical pipe entering the test rig at the second pipe spool

ORIGINAL PAGE
BLACK AND WHITE PHOTOGRAPH

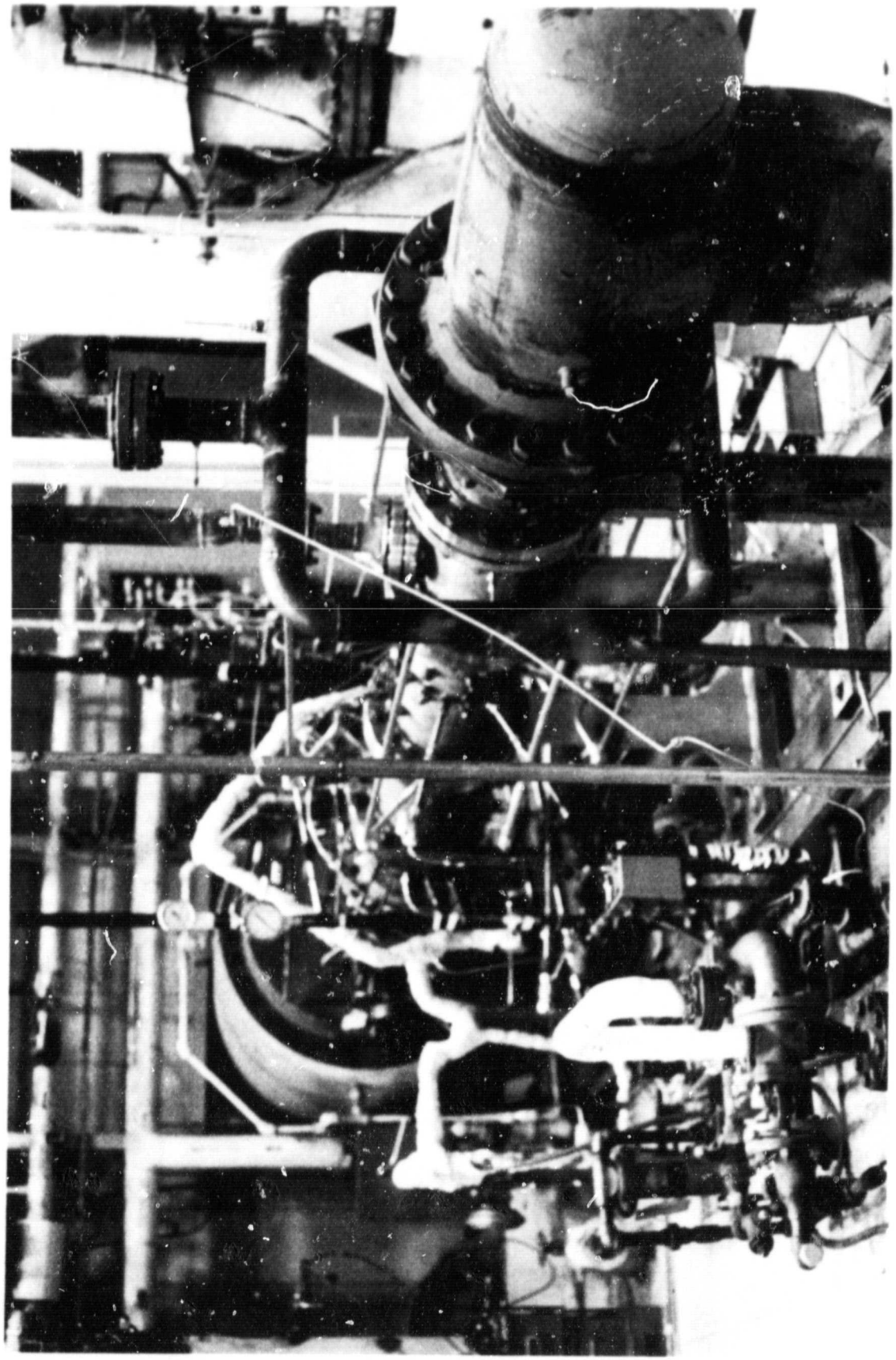

FIGURE 5-14
COMBUSTOR TEST STAND ARRANGEMENT

ORIGINAL PAGE
BLACK AND WHITE PHOTOGRAPH

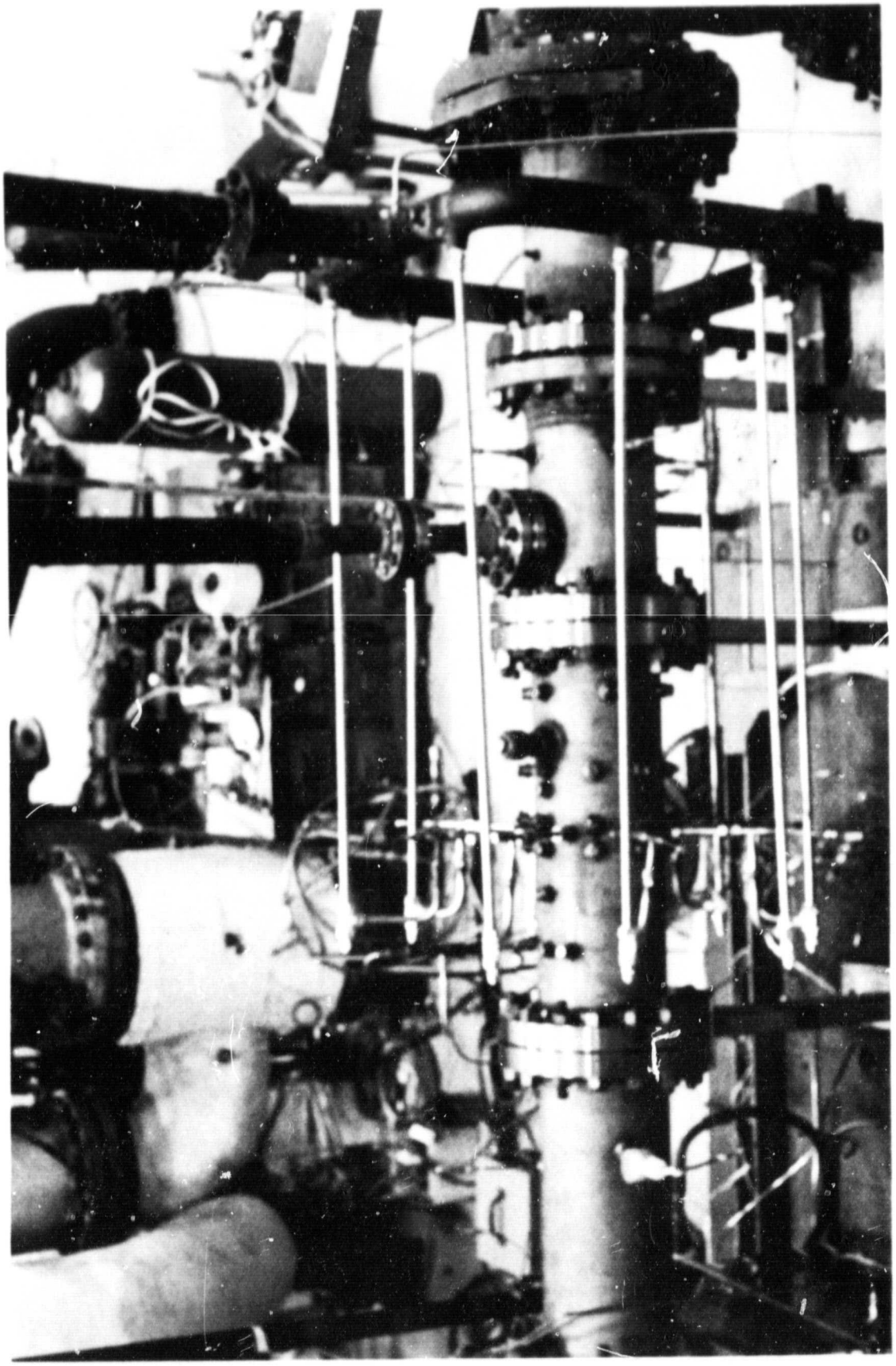

FIGURE 5-15
INSTALLED TEST RIG

from the right of the photo delivers fuel gas to the large central fuel nozzle in the combustor dome end. Figure 5-16 shows the array of gas sampling probe and thermocouple penetrations for measuring combustor exhaust emissions and temperatures.

5.4 INSTRUMENTATION

The combustor test rig assembly was instrumented to measure the performance and durability of the combustor. A listing of the combustor and rig instrumentation used in the test program is presented in Table 5-1.

Total inlet airflow measurements were made using standard ASME orifices which are an integral part of the Gas Turbine Development Laboratory (GTDL) facilities. Inlet total air pressure and temperature were measured with 4 rakes having 2 immersions each. These rakes are an integral part of GTDL test stand No. 4. Test rig and combustor static pressures were measured using three wall static taps located as shown on Figure 5-17. These pressures were referenced to the inlet air total pressure to determine the pressure drops to the rig and across the liner.

For the first five test points, gas fuel flow from the tube trailers was measured using a calibrated turbine meter. Fuel supply pressure was measured using one wall static pressure tap located in the fuel manifold. During the sixth test point, the thermocouple measuring gas temperature at the turbine meter inlet failed. For all subsequent test points, total fuel flow was calculated using the fuel nozzle effective area determined from data taken while the turbine meter thermocouple was functioning properly, and the measured fuel supply conditions and combustion chamber conditions. In effect, the fuel

ORIGINAL PAGE
BLACK AND WHITE PHOTOGRAPH

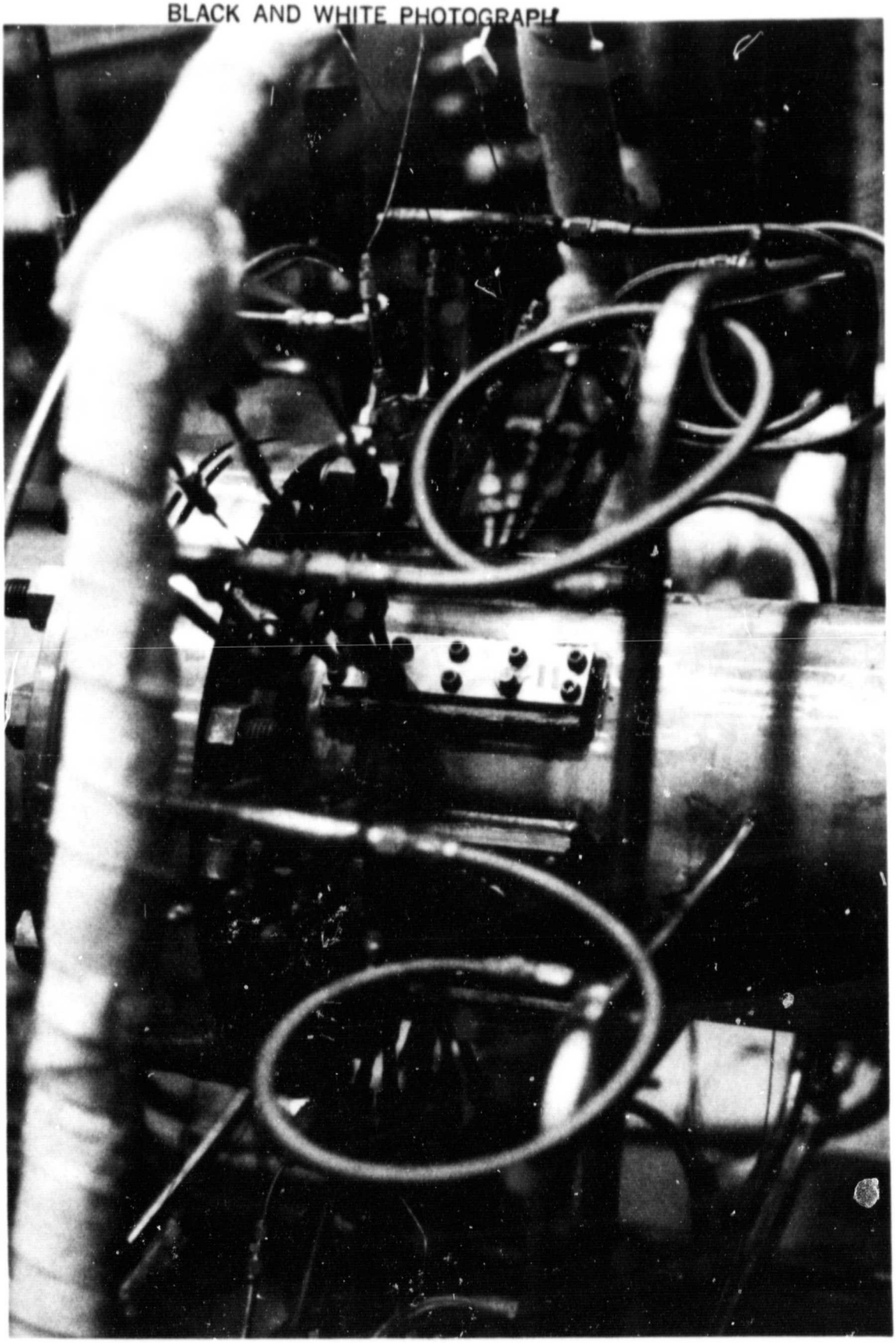

FIGURE 5-16
TEST RIG EXHAUST GAS INSTRUMENTATION

Table 5-1

COMBUSTOR/RIG INSTRUMENTATION

Parameter	Instrumentation
Inlet Air Total Pressure	4 2-Element Total Pressure Rakes
Combustor Exit Total Pressure	4 3-Element Gas Sampling/Total Pressure Rakes
Inlet Air Humidity Level	Dew Point Hygrometer
Total Airflow	Standard ASME Orifice
Inlet Air Total Temperatures	4 2-Element Thermocouple Rakes
Combustor Exit Total Temperature	4 3-Element Thermocouple Rakes
Von Brand Reflective Smoke Number (VBRSN)	Single Point Gas Sample Probe
Combustor Exit Emissions (other than smoke)	4 3-Element Gas Sampling/Total Pressure Rakes
Fuel Supply Pressure	1 Static Pressure Tap Located in Fuel Manifold
Tube Trailer Gas Fuel Flow	Turbine Meter
Fuel Nitrogen Flow	Standard ASME Orifice
Fuel Ammonia Flow	Standard ASME Orifice
Fuel Supply Temperature	1 Immersion Thermocouple in Fuel Manifold
Combustor Liner Pressure Drop	3 Static Pressure Taps Located per Figure 5-17
Combustor Metal Temperatures	16 Metal Surface Thermocouples Located per Figure 5-18

ORIGINAL PAGE IS
OF POOR QUALITY

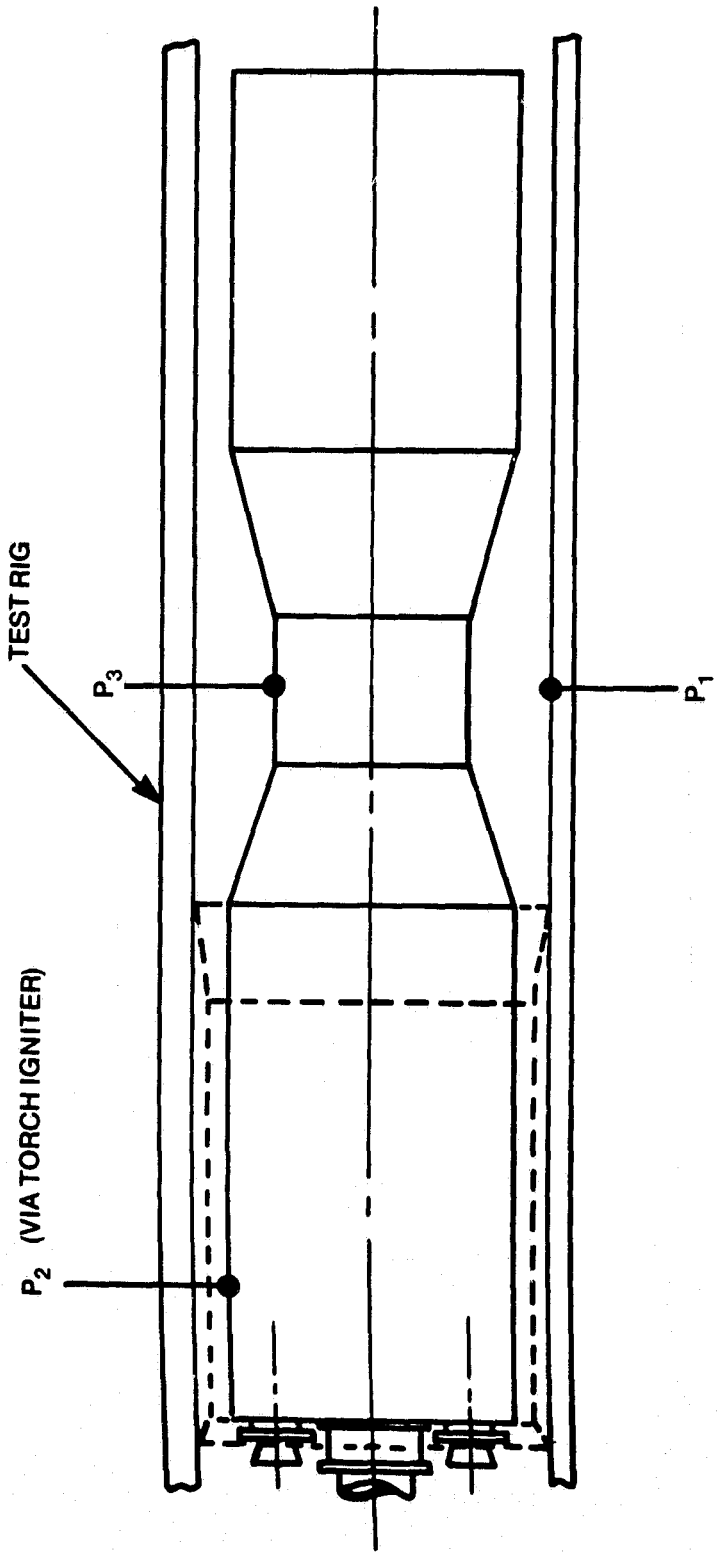

Figure 5-17
WALL STATIC PRESSURE TAP LOCATIONS, CONCEPT 2 RICH-LEAN

nozzles were used as a metering orifice to determine fuel flow. The pressure tap in the fuel manifold was used in conjunction with an internal static pressure (P_2 on Figure 5-17) to obtain fuel nozzle pressure drop. Fuel nitrogen and ammonia flows were measured using standard ASME orifices.

The combustor liner was instrumented with an array of sixteen metal surface thermocouples located as shown on Figure 5-18.

Instrumentation at the combustor exit was the same as that used in the Phase 1 liquid fuel tests of the Low NO_x Heavy Fuel Combustor Concept Program (Final Report, Reference 1) with the exception that a large single point smoke probe was added. This was necessary since the gas sample probes did not provide the required flow rate for the GTDL smoke measurement apparatus. The exhaust gas instrumentation, which was identical to that used in the Phase 1 liquid fuel tests, consisted of four three-element gas sampling rakes and four three-element thermocouple rakes. The gas sampling rakes were also utilized for measuring combustor exit total pressures. The three elements on each rake were mounted on centers of equal area in the combustor exit with one element of one gas sample rake located on the combustor centerline. The gas sample probes were ganged together for all test points in this program. This was done to reduce the time required at each test point, and so conserve the available fuel gas supply. The available fuel gas supply limited the time at each test point and did not allow for the time consuming process of individual probe sampling and analyses. The gang samples are presumed to be representative of bulk gas properties at the combustor exit, as was demonstrated in the Phase 1 liquid fuel tests. The gas sample probes were water-cooled for durability.

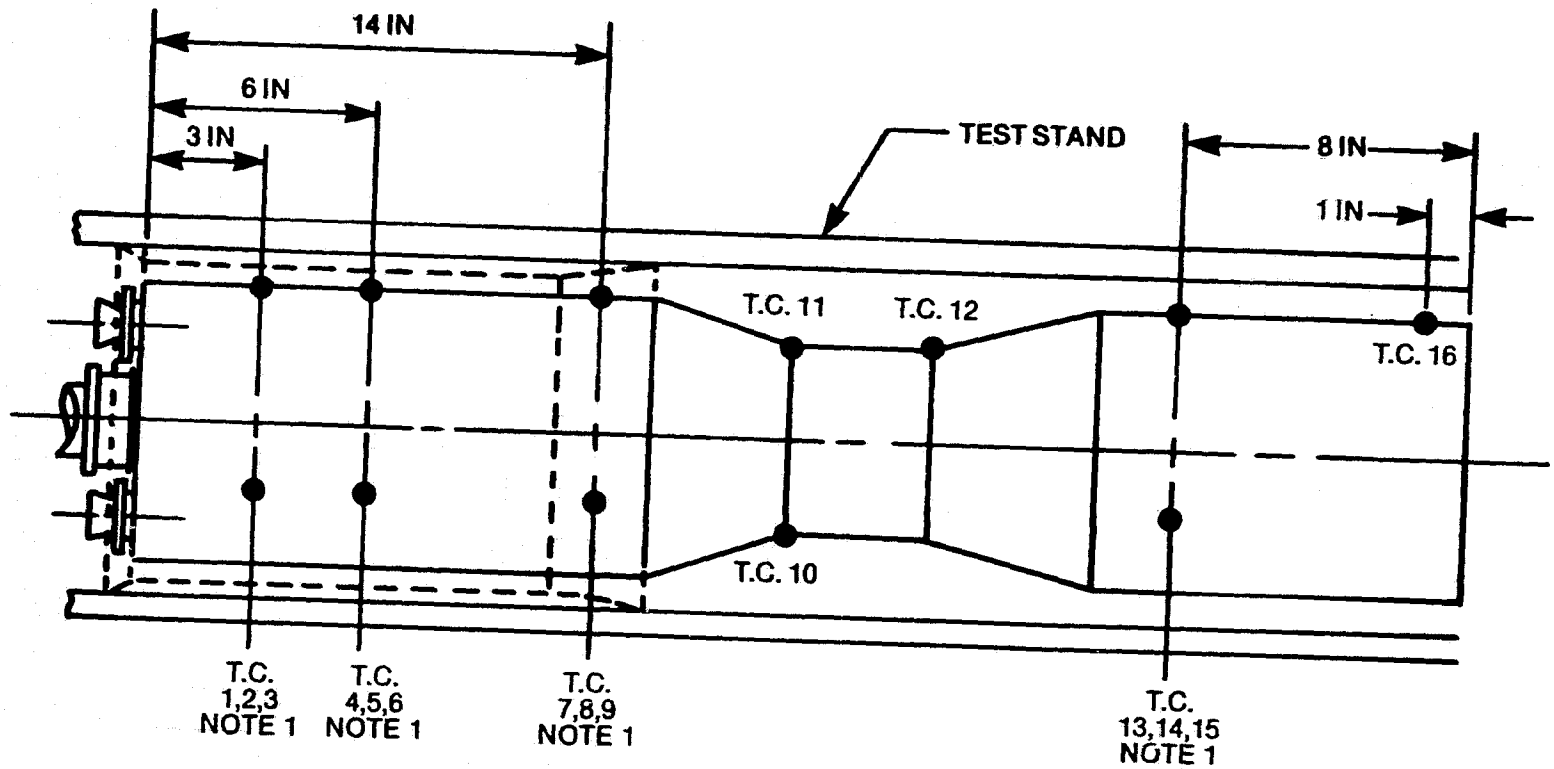

NOTE 1—T.C.S EQUALLY SPACED CIRCUMFERENTIALLY.
1 T.C. ALIGNED WITH A FUEL NOZZLE POSITION.

Figure 5-18
CONCEPT 2 LINER THERMOCOUPLE LOCATIONS—GAS FUEL

ORIGINAL PAGE IS
OF POOR QUALITY

REFERENCES

1. Cutrone, M.B., et al: Low NO_x Heavy Fuel Combustor Concept Program - Phase I Final Report. NASA CR-165449, October 1981.

SECTION 6

COMBUSTOR CONCEPT DESCRIPTIONS

6.1 RICH-LEAN COMBUSTOR, CONCEPT 2

The multinozzle rich-lean combustor, Concept 2, was selected for gas fuel testing in Phase 1A. Concept 2 had achieved NO_x performance approaching all program goals during the Phase I liquid fuel tests (see Phase I Final Report, October 1981). Rich-lean combustor Concept 3, which demonstrated even superior performance potential, was not available for Phase 1A gas tests since it required extensive hardware repair.

6.1.1 Combustor Design Features

Figure 6-1 is a schematic of rich-lean Concept 2. The gas-fueled combustor design is based on the rich-lean combustor with multiple nozzle dome which was developed for liquid fuels in Phase I of the Low NO_x Combustor Program. The internal dimensions, which establish reference velocities and dwell times in the rich, quench and lean reaction zones, are the same in the gas and liquid fueled combustors. The major differences between the gas and liquid fueled combustors are as follows:

(1) The center body in the liquid fuel combustor dome was removed and replaced with a gas fuel nozzle to provide the large volume fuel flow required with low Btu gas fuel. The center fuel nozzle was designed to pass 71% of the total fuel flow with the remaining 29% distributed equally among the eight smaller outer fuel nozzles in the combustor rich stage dome.

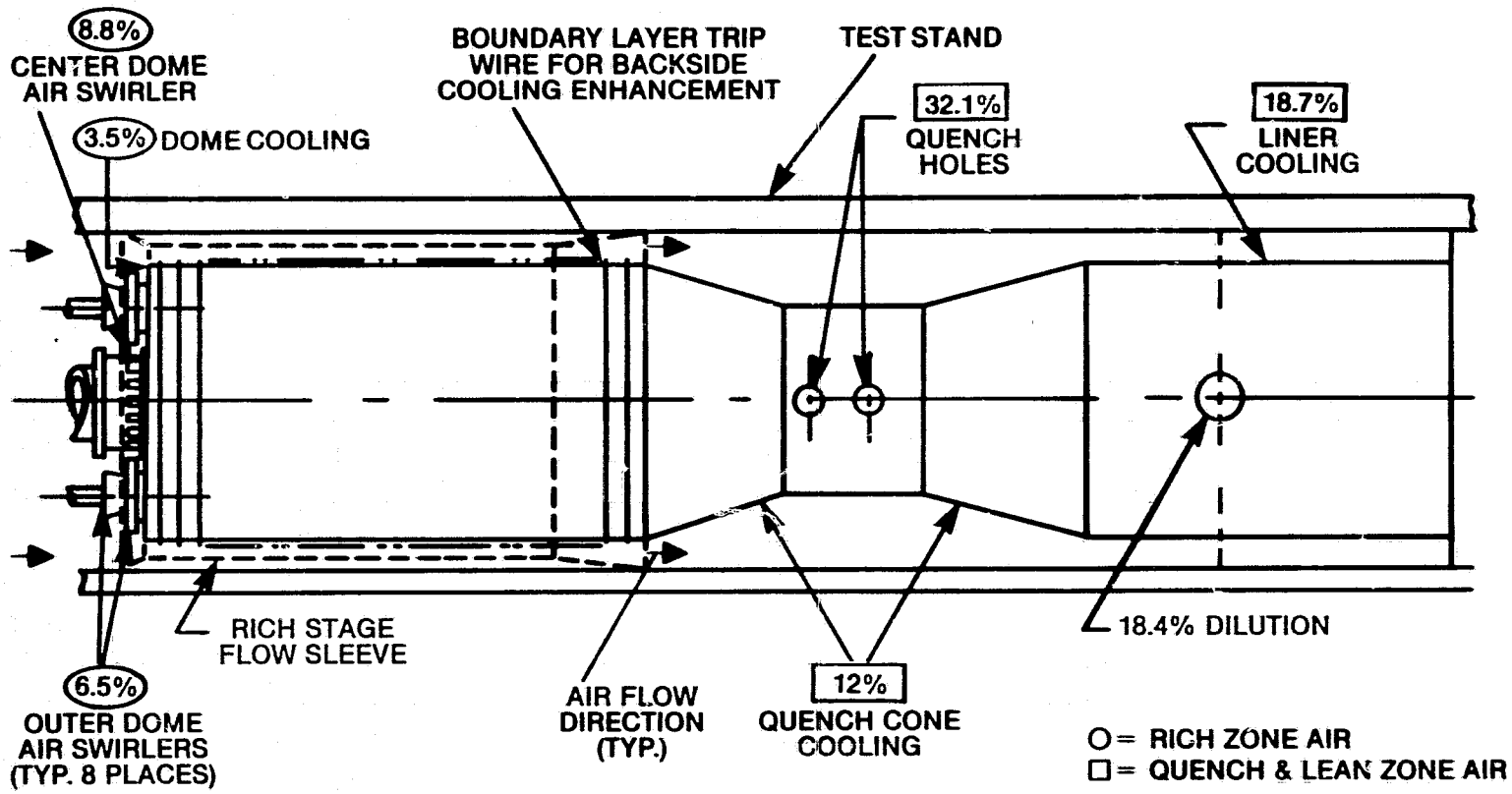

Figure 6-1
CONCEPT 2 RICH LEAN COMBUSTOR, AIR FLOW SPLITS FOR GAS FUEL TESTING

ORIGINAL PAGE IS
OF POOR QUALITY

(2) Gas fuel nozzles were installed in the eight outer fuel nozzle positions in lieu of the air atomizing liquid fuel nozzles which had been used in Phase I.

(3) A boundary layer trip wire was installed on the outer diameter of the rich stage liner as shown in Figure 6-2 in order to improve rich-stage heat transfer. As in the liquid fueled combustor, the rich-stage liner of the gas fueled combustor is not cooled by film air through cooling louvers or holes, but rather depends upon backside convection cooling. This is done in order to maintain the desired radially-uniform rich zone stoichiometry. Experience with the liquid fueled rich-lean combustors showed that it was difficult to obtain adequate cooling with backside convection alone despite the thermal barrier coating (0.013-0.017 thick Yttria Stabilized Zirconia) applied to the inside surface of the rich stage on both the liquid and gas fueled combustors. The boundary layer trip wire was predicted to increase the backside convection heat transfer coefficient by approximately a factor of two thorugh promotion of increased turbulence. The wire used was 0.38 mm (0.015-inch) diameter annealed 300 Series stainless. Approximately 100 turns were applied over the full length of the rich stage liner with a turn-to-turn spacing of 3.8 mm (0.15 inch). Tack welds were used to attach the wire to the liner.

(4) Nichrome was appied to the counter rotating air swirlers of the eight outer fuel nozzles as shown in Figure 6-3 in order to redistribute the dome air to accommodate the new center gas fuel nozzle.

ORIGINAL PAGE
BLACK AND WHITE PHOTOGRAPH

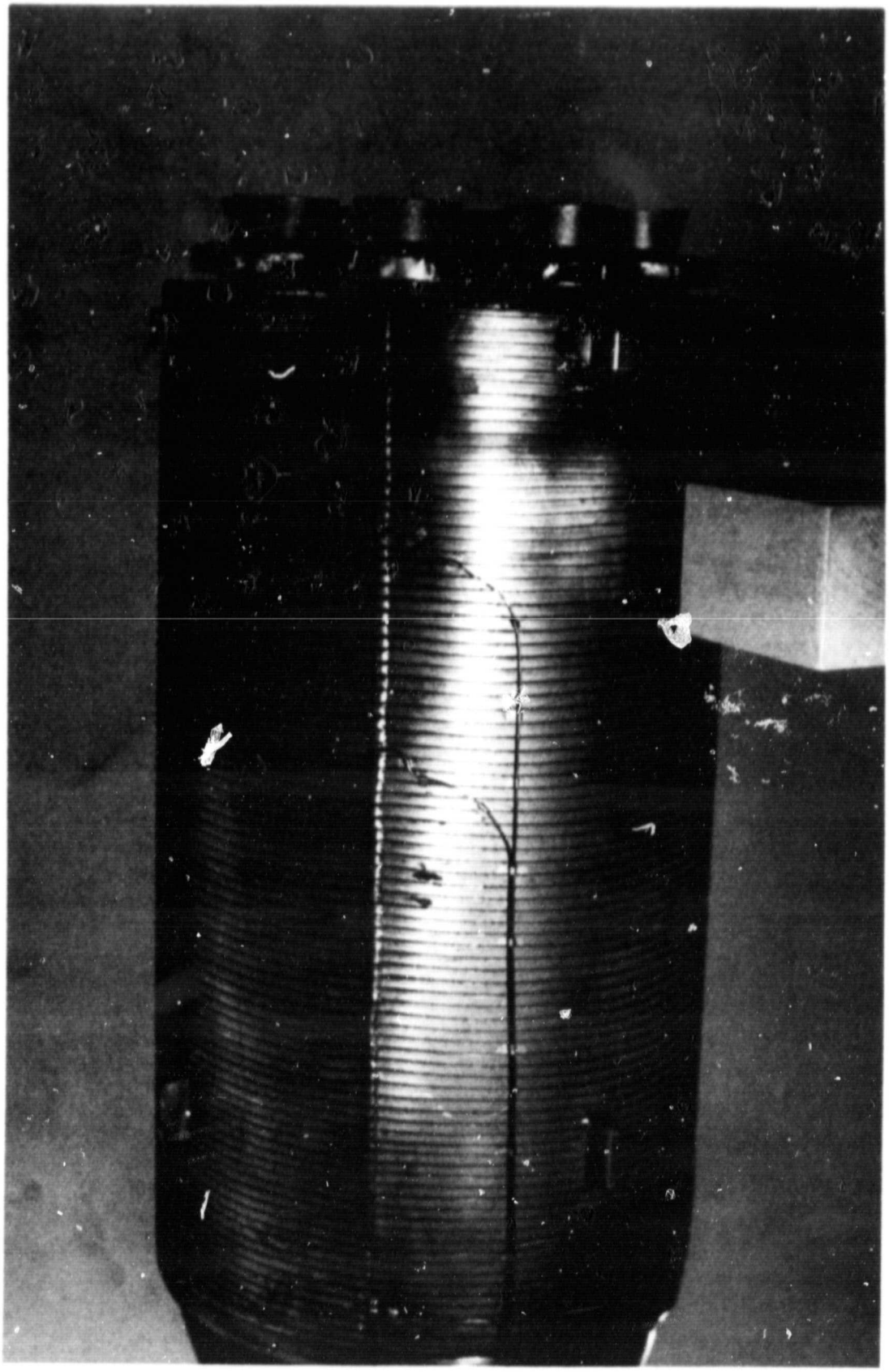

Figure 6-2
RICH STAGE BOUNDARY LAYER TRIP WIRE, CONCEPT 2

ORIGINAL PAGE
BLACK AND WHITE PHOTOGRAPH

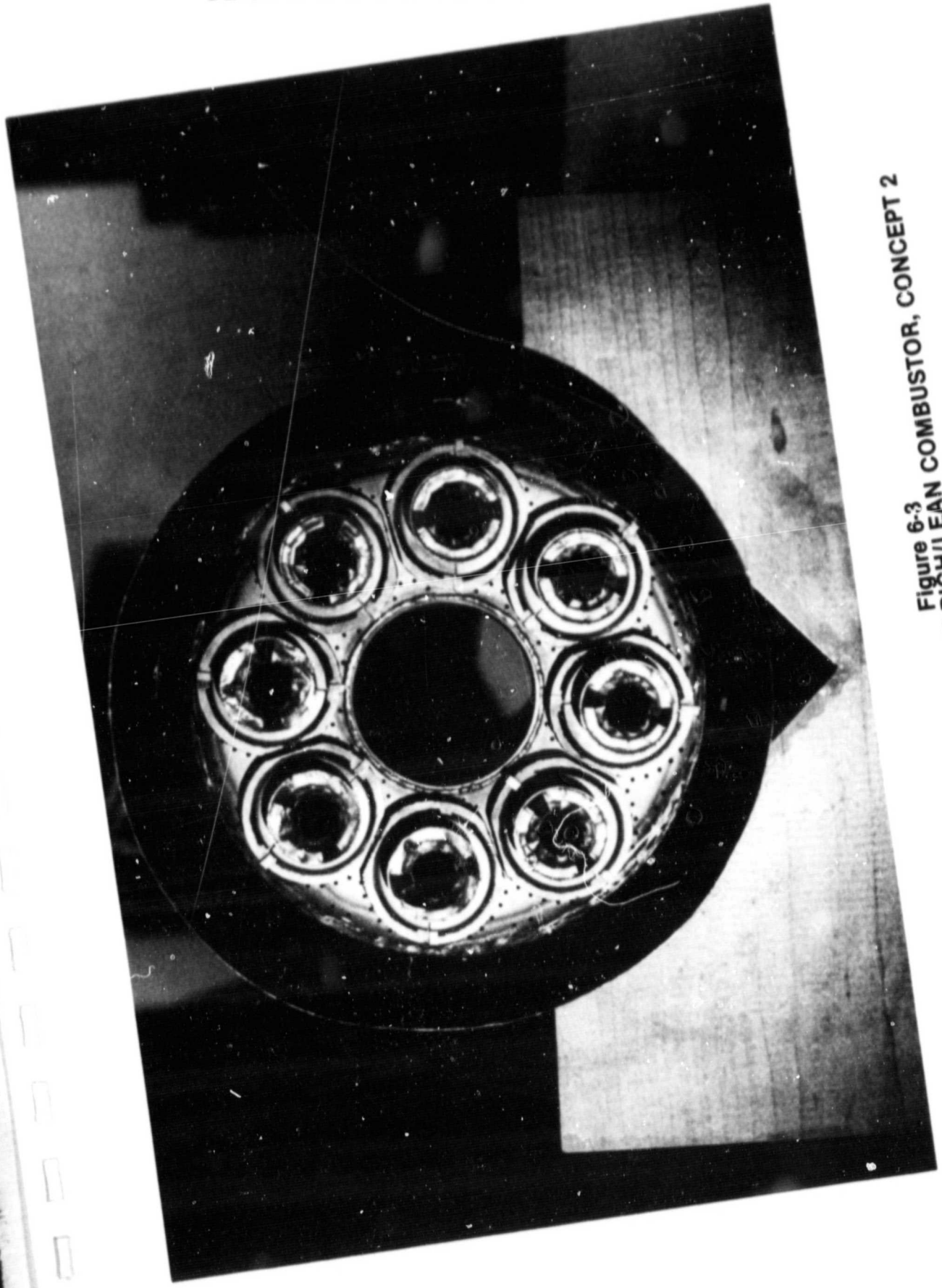

Figure 6-3
MULTIPLE—NOZZLE DOME RICH/LEAN COMBUSTOR, CONCEPT 2

Figure 6-4 shows the rich-lean combustor liner as configured and instrumented for gas fuel testing. The boundary layer trip wire is obscured by the flow sleeve in this photograph. Tables 6-1 and 6-2 present the airflow splits and equivalence ratios as designed for gas fuel testing of Concept 2. Cold airflow tests were performed on the modified combustor to verify that the intended airflow splits were, in fact, achieved.

6.1.2 Fuel Nozzle Designs

Two gas fuel nozzle designs were employed for the rich-lean combustor, Concept 2. The design of the outer fuel nozzles is shown in Figure 6-5. Eight of these fuel nozzles were used in the rich-stage dome. The counter-rotating air swirlers, venturi, and mixing cups for these fuel nozzles were the same as employed for liquid fuel testing. Only the gas fuel delivery pipe and gas tip were newly-designed parts. The gas tip is 16.0 mm (0.63 in.) OD for insertion into the 16.5 mm (0.65 in.) ID air swirlers. Each gas tip has four 2.9 mm (0.1165) inch diameter gas metering holes. During cold flow tests, the gas tips exhibited effective areas ranging from 18.75 mm^2 (0.0300 in^2) to 21.1 mm^2 (0.0337 in^2) at the design pressure ratio of 1.3. Measured total effective area of the eight gas fuel tips was 160 mm^2 (0.2555 in^2) at the design pressure ratio.

The gas fuel tip design for the large center fuel nozzle is shown in Figure 6-6. Two configurations are shown, original and modified. The modification was made to increase the flow area downstream of the air swirler and fuel metering holes. The need for this modification was identified by cold flow testing which showed that fuel flow would back-pressure the air swirler with the original configuration. If not corrected, this would alter the

ORIGINAL PAGE
BLACK AND WHITE PHOTOGRAPH

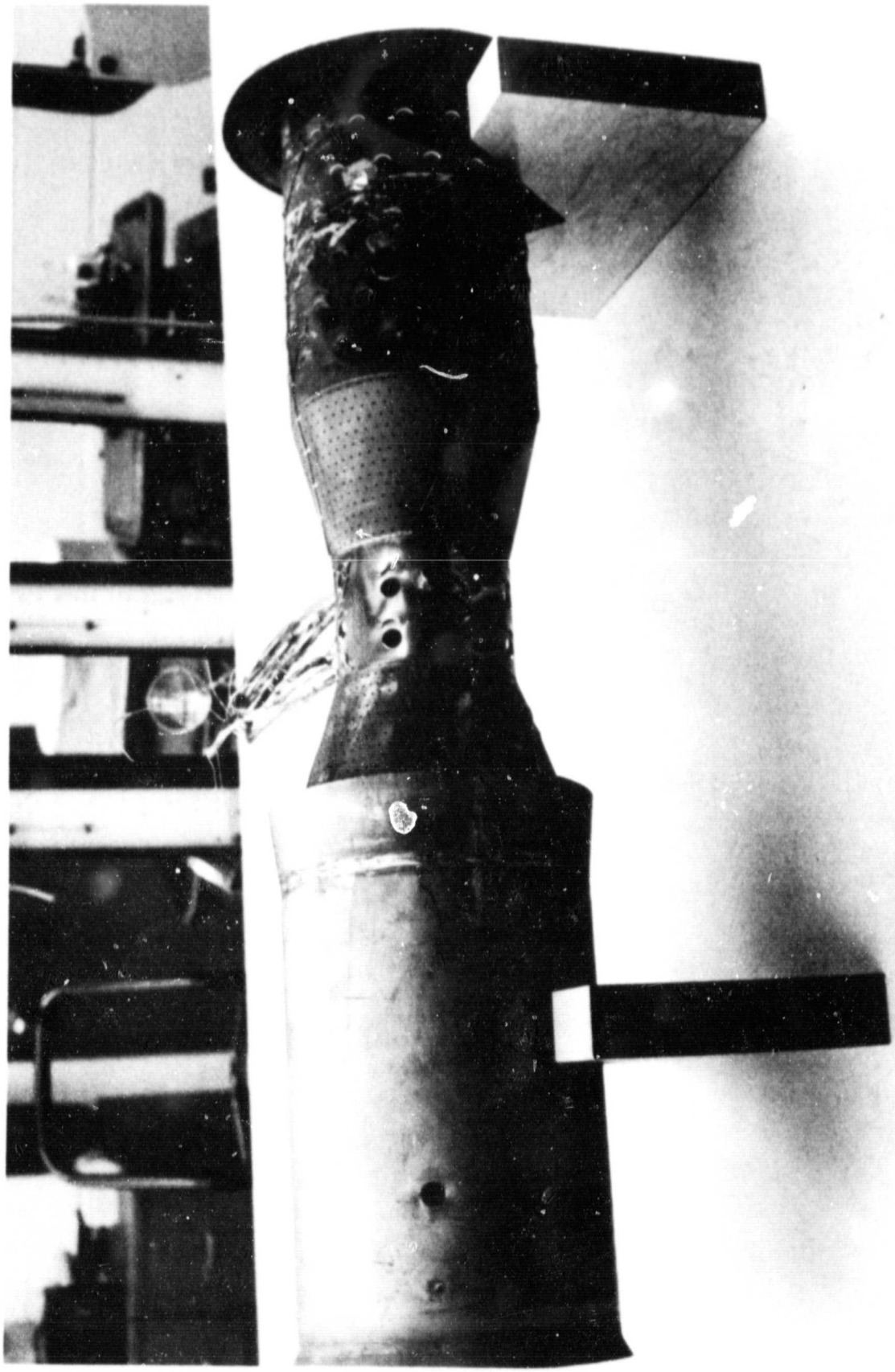

Figure 6-4
CONCEPT 2, RICH/LEAN COMBUSTOR WITH FLOW SLEEVE

Table 6-1

AIRFLOW SPLITS, CONCEPT 2

Outer Dome Swirlers	6.5%
Center Fuel Nozzle	8.8%
Dome Cooling	3.5%
Total Rich Stage	18.8%
Quench Flow	32.1%
Quench Cone Cooling	12.0%
Total Quench Flow	44.1%
Liner Cooling	18.7%
Dilution	18.4%
Total Lean Stage	37.1%

Table 6-2

CONCEPT 2, COMBUSTOR EQUIVALENCE RATIOS

Fuel LHV	Load Condition	50%	92% (Base)	100% (Peak)
244 Btu/scf	Fuel/Air Overall[1] ϕ Overall[2]	0.0580 0.161	0.1040 0.289	0.1110 0.309
209 Btu/scf	Fuel/Air Overall ϕ Overall	0.0810 0.184	0.1320 0.300	0.1410 0.320
172 Btu/scf	Fuel/Air Overall ϕ Overall	0.1070 0.191	0.1680 0.300	0.1850 0.330
Stage Equivalence Ratios				
244 Btu/scf	Rich Stage Quench Stage	0.856 0.256	1.537 0.459	1.644 0.491
209 Btu/scf	Rich Stage Quench Stage	0.979 0.293	1.596 0.477	1.702 0.509
172 Btu/scf	Rich Stage Quench Stage	1.015 0.304	1.596 0.477	1.755 0.525

(1) Overall fuel/air mass ratio
(2) Equivalence ratio, overall

ORIGINAL PAGE IS
OF POOR QUALITY

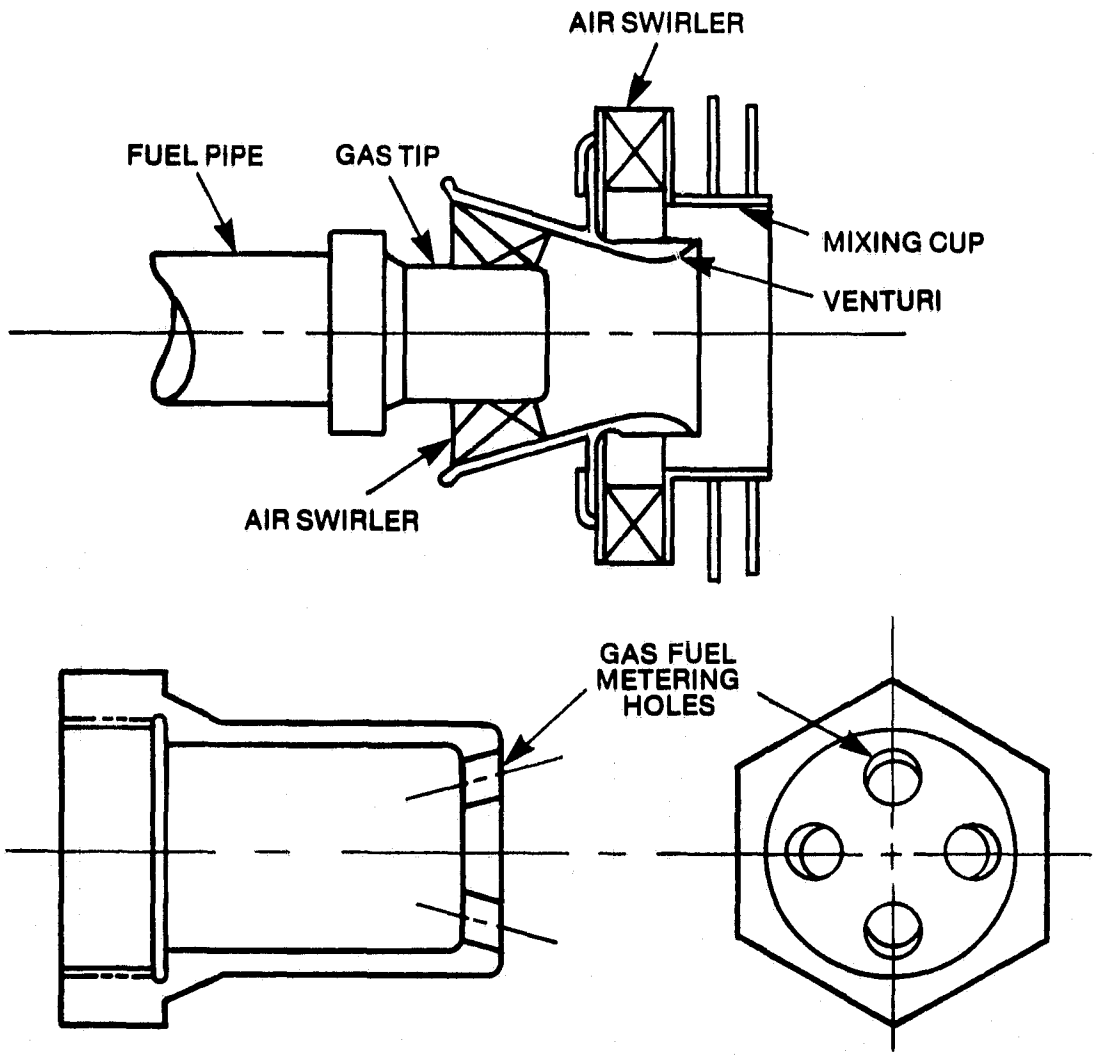

GAS TIP DETAIL

Figure 6-5
CONCEPT 2 OUTER GAS FUEL NOZZLE DESIGN, GAS TIP DETAIL

ORIGINAL PAGE IS
OF POOR QUALITY

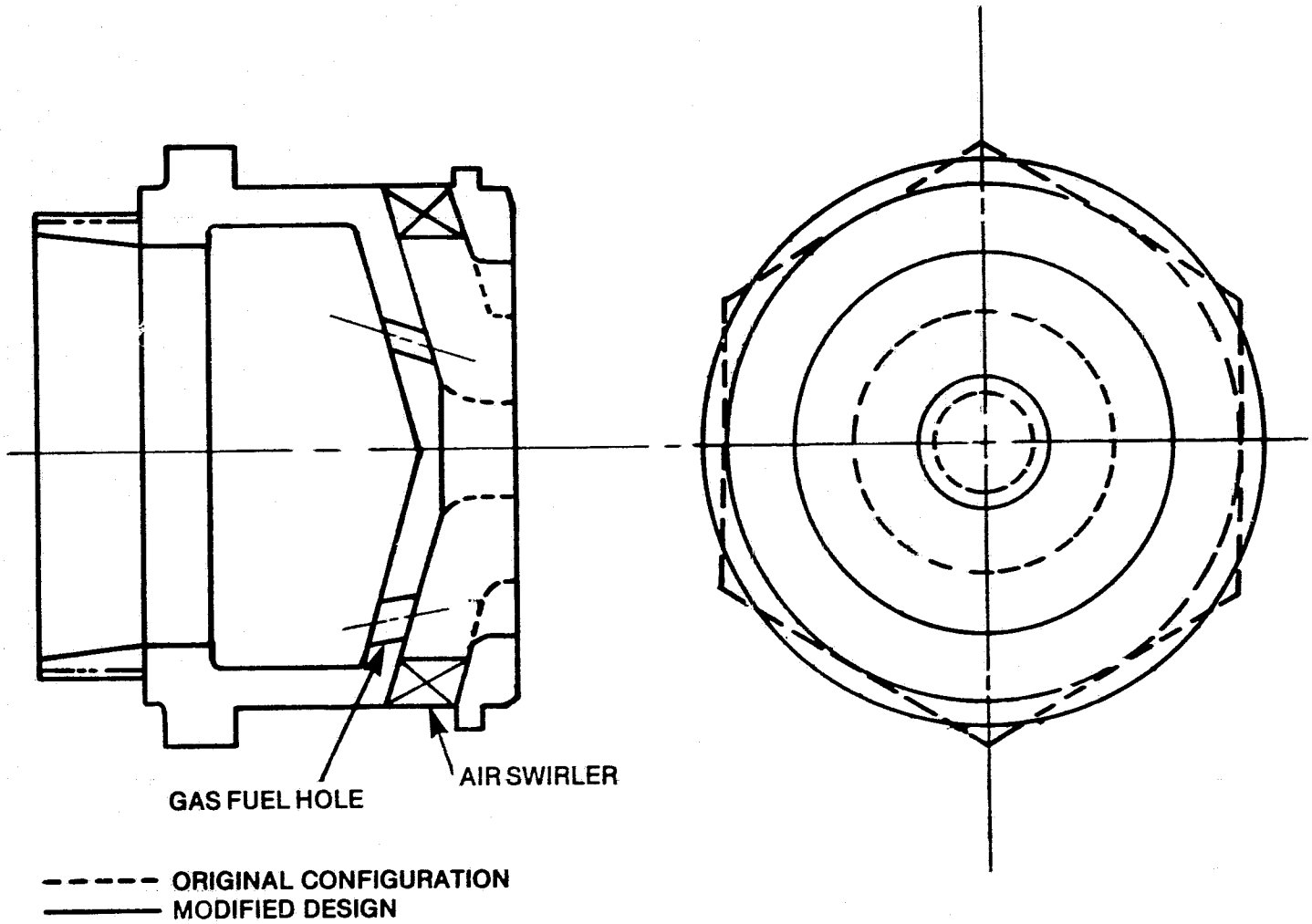

Figure 6-6
MODIFICATIONS TO CONCEPT 2 COMBUSTOR CENTER GAS FUEL NOZZLE

airflow splits and stoichiometry under fired conditions and could result in reverse flow of fuel through the air swirler. The modification, which increased the flow area from 0.208 cm^2 (1.343 in^2) to 0.487 cm^2 (3.142 in^2), eliminated the back-pressure problem. The center nozzle gas tip has twenty gas fuel metering holes, ten 4.675 mm (0.187 in) in diameter and ten 6.25 mm (0.250 in) in diameter. During cold flow testing, the center gas tip exhibited an effective area of 0.098 cm^2 (0.630 in^2) at the design pressure ratio. Figures 6-7 and 6-8 show the center fuel nozzle after modification to eliminate the air swirler backpressure problem and after the addition of Nichrome strip to adjust the air swirler flow area to obtain the desired air flow split. Figure 6-9 presents the cold flow calibration data for the center fuel nozzle after modification. Figure 6-10 presents typical cold flow calibration data for one of the eight outer fuel nozzles.

6.2 LEAN-LEAN COMBUSTOR, CONCEPT 4

Figure 6-11 is a schematic of Concept 4 and Figure 6-12 shows the design of the pilot stage gas fuel nozzle for this combustor. The gas fueled combustor is based upon the series-staged lean-lean combustor developed for liquid fuel operation in Phase I of the Low NO_x Combustor Program. The internal dimensions, which establish reference velocities and dwell times in the pilot and main stages, are the same for both the gas and liquid fueled combustors. The major differences between the gas and liquid fueled combustors are as follows:

ORIGINAL PAGE
BLACK AND WHITE PHOTOGRAPH

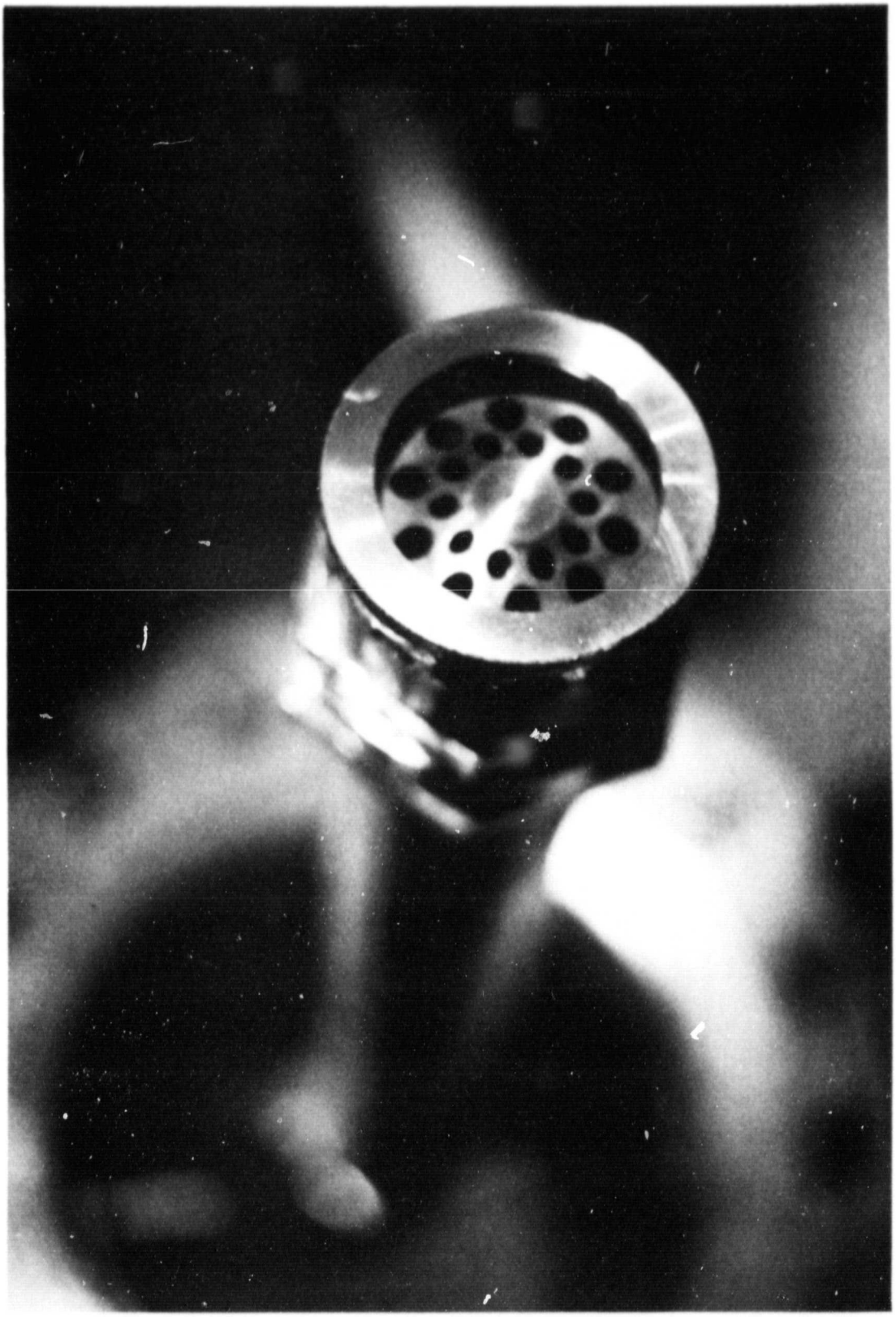

Figure 6-7
CENTER FUEL NOZZLE FOR RICH/LEAN COMBUSTOR, CONCEPT 2

ORIGINAL PAGE
BLACK AND WHITE PHOTOGRAPH

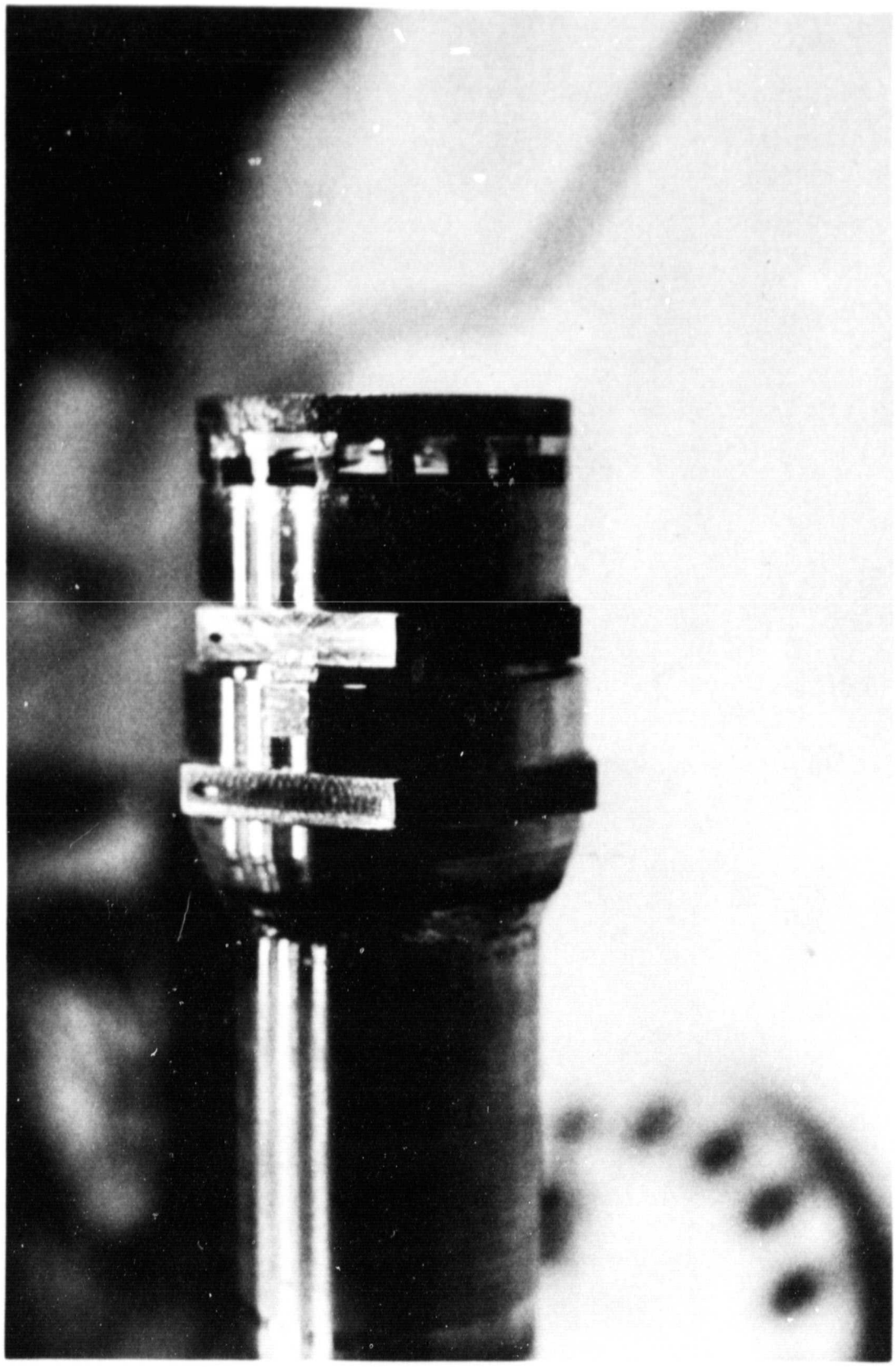

Figure 6-8
CENTER FUEL NOZZLE FOR RICH/LEAN COMBUSTOR, CONCEPT 2

ORIGINAL PAGE IS
OF POOR QUALITY

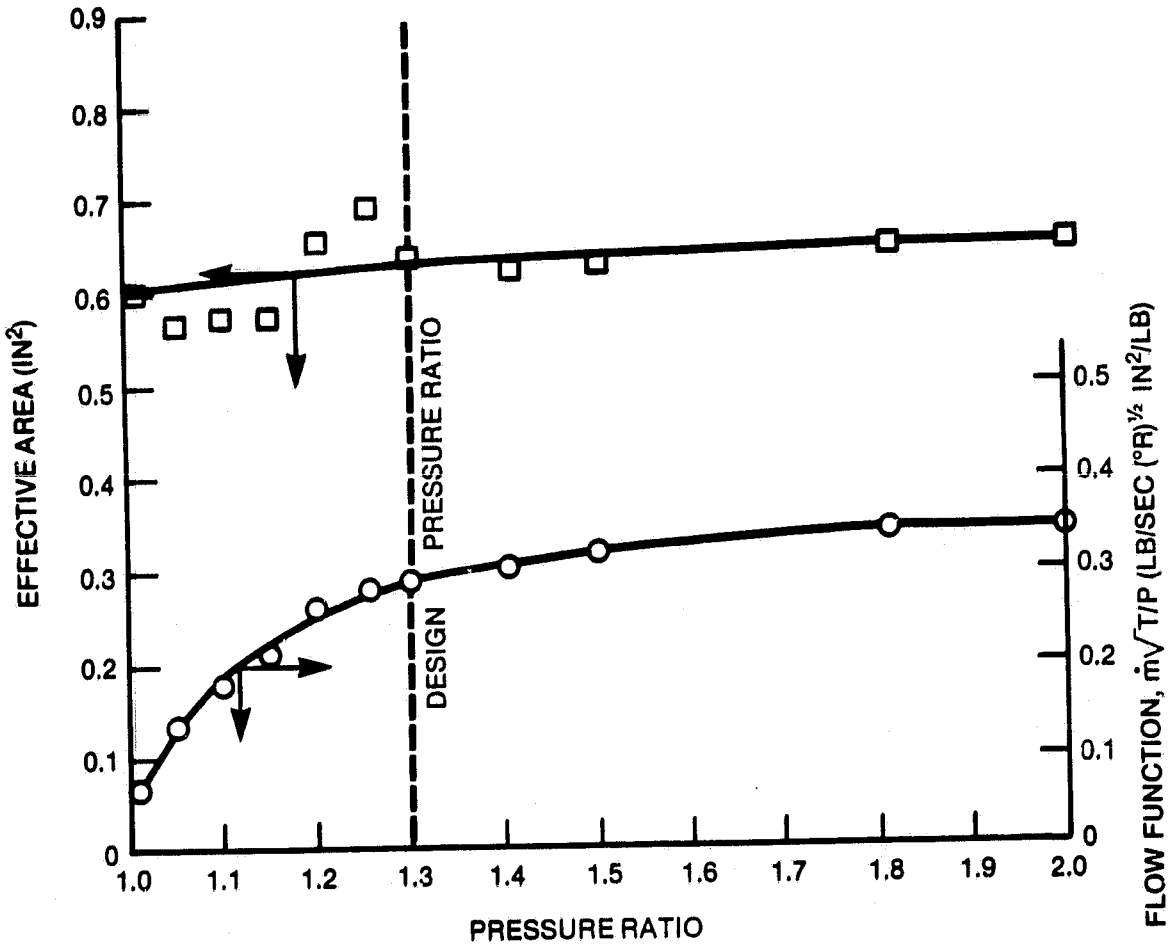

Figure 6-9
CENTER FUEL NOZZLE CALIBRATION, CONCEPT 2

ORIGINAL PAGE IS
OF POOR QUALITY

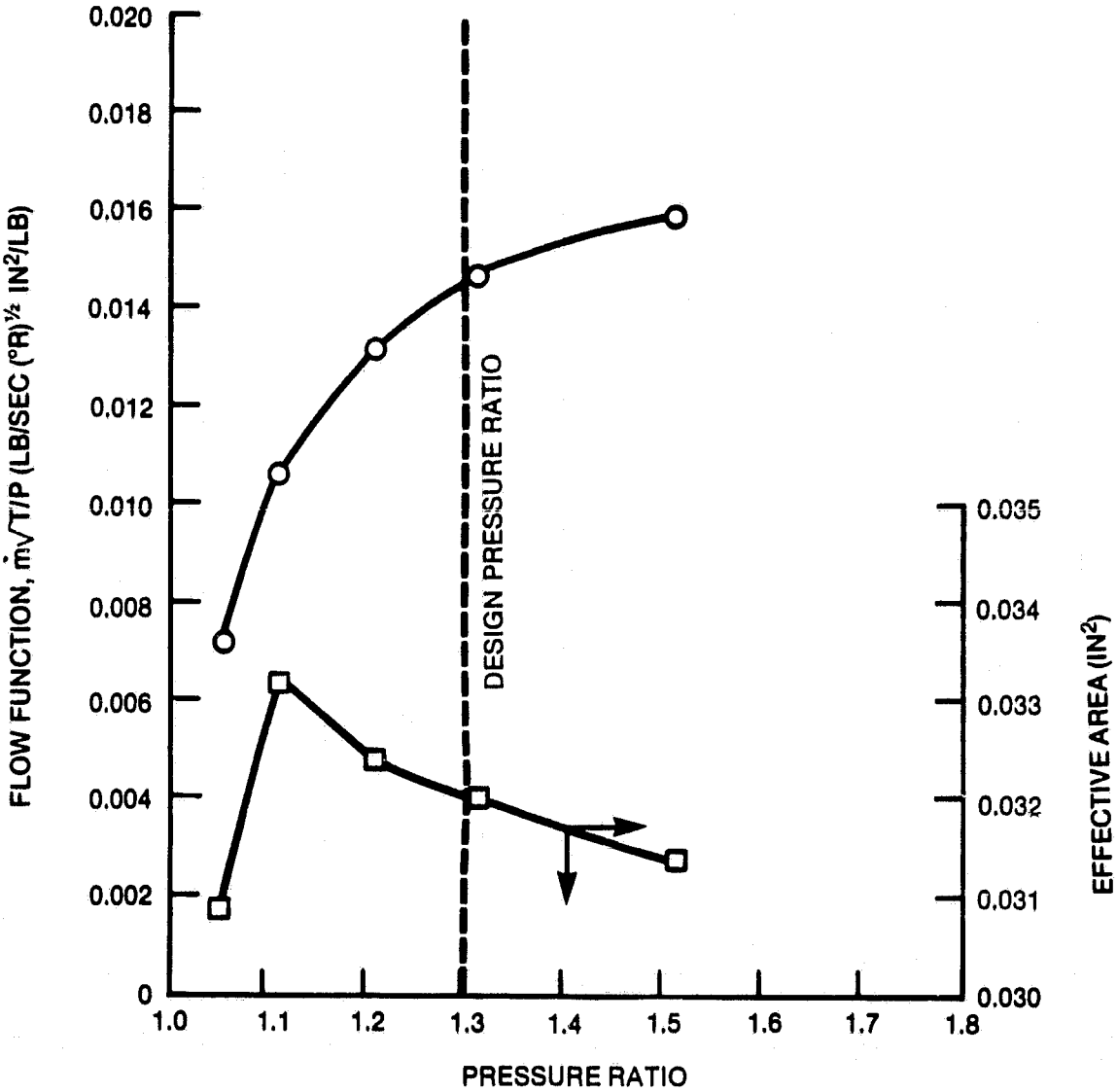

Figure 6-10
TYPICAL OUTER FUEL NOZZLE CALIBRATION, CONCEPT 2

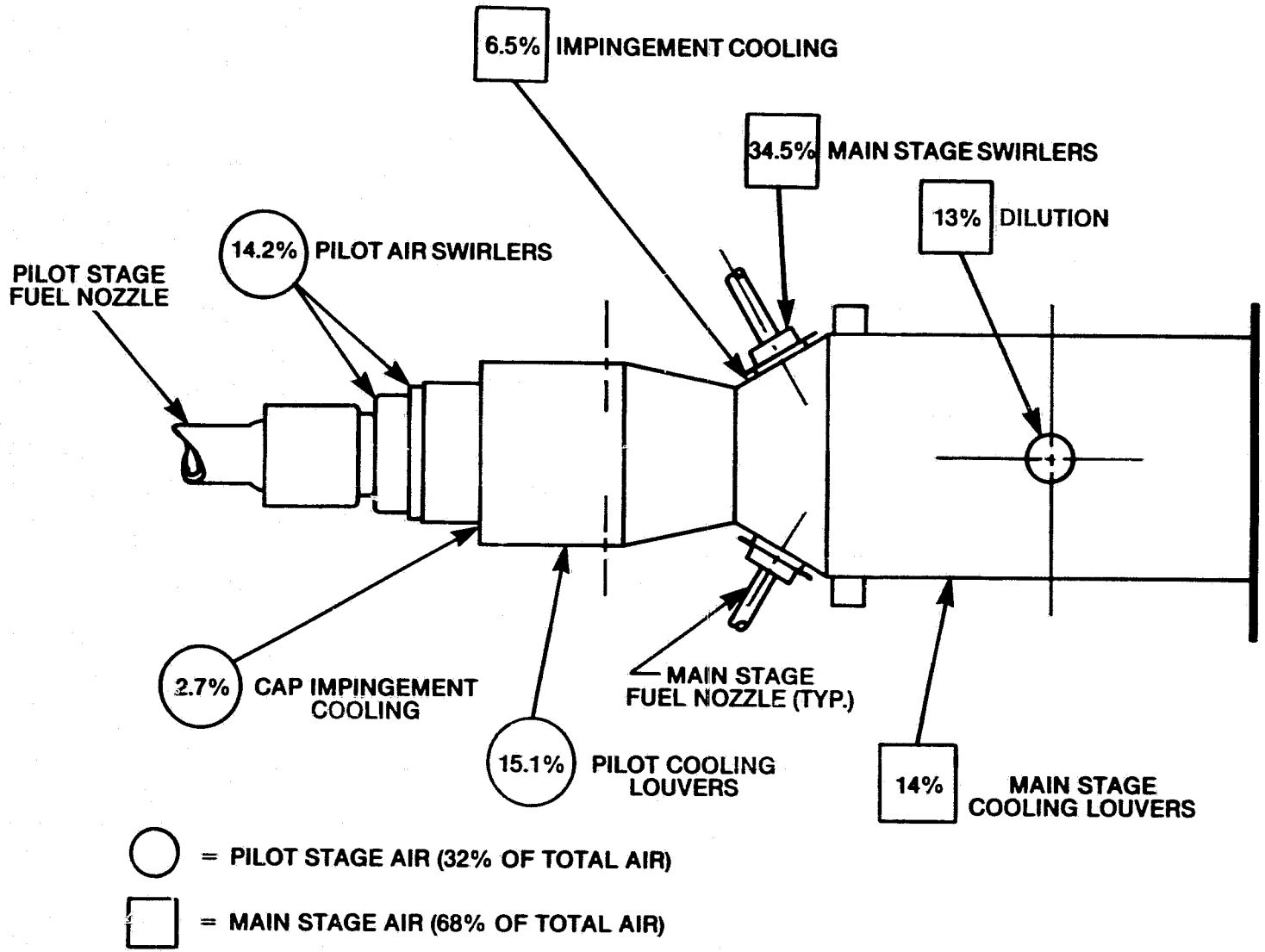

Figure 6-11
CONCEPT 4 LEAN-LEAN COMBUSTOR, AIR FLOW SPLITS FOR GAS FUEL TESTING

ORIGINAL PAGE IS OF POOR QUALITY

ORIGINAL PAGE IS
OF POOR QUALITY

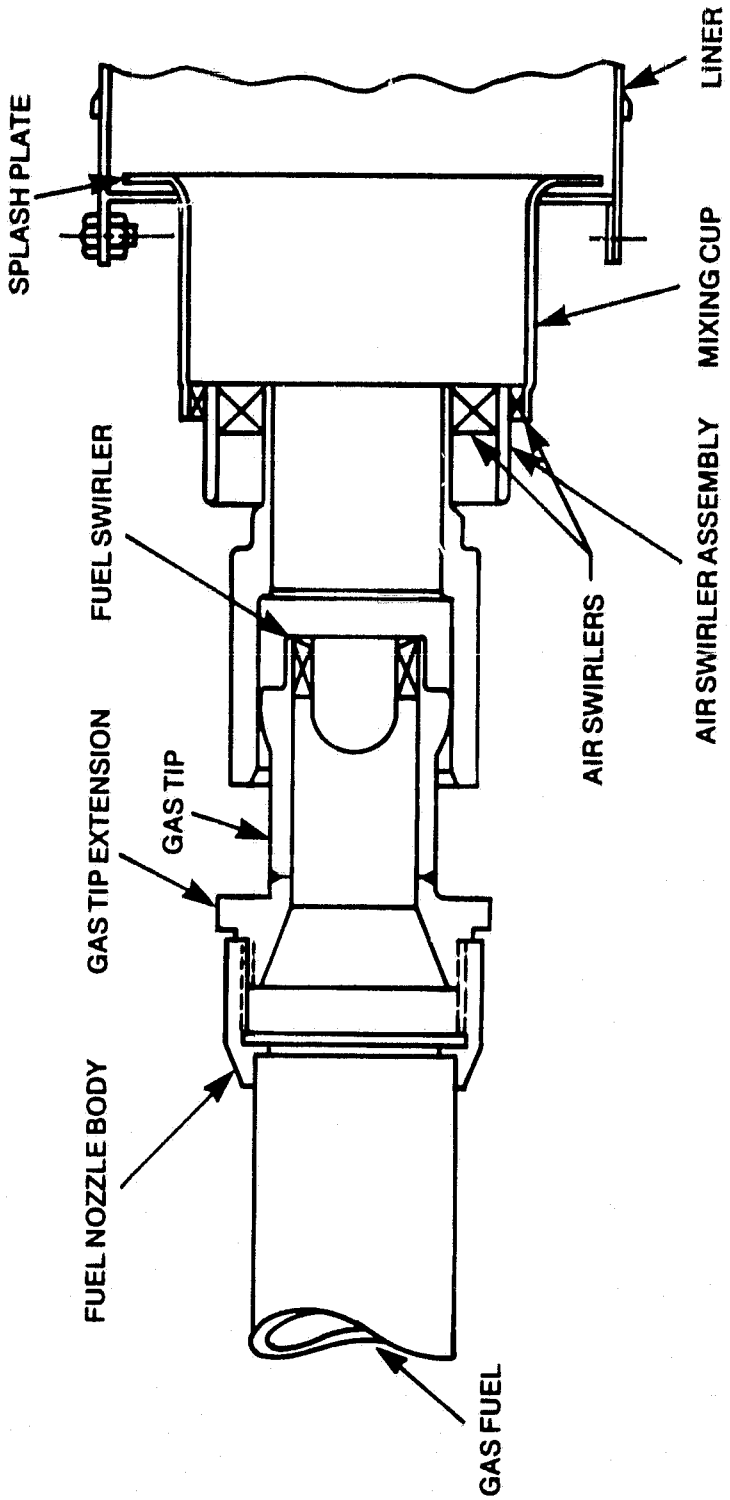

Figure 6-12
CONCEPT 4—PILOT GAS FUEL NOZZLE DESIGN

(1) The pilot fuel nozzles and air swirlers designed for liquid fuel operation were removed and replaced with a high-swirl gas fuel nozzle designed and developed for low and intermediate Btu gas fuels as part of the High Temperature Turbine Technology program conducted by GE Gas Turbine Division for the U.S. Department of Energy. This fuel nozzle design was selected for use with the lean-lean combustor because of its demonstrated ability to provide rapid fuel/air mixing and stable operation over a wide turn-down ratio. The design incorporates a central fuel swirler with vanes which turn the flow 60° off axial. Surrounding the fuel swirler are two air swirlers which turn the flow 35° and 30° off axial. The air is turned in the opposite direction from the fuel since the contra-swirl design was found experimentally to promote rapid mixing. The fuel nozzle generates a strong vortex with a central recirculation zone which stabilizes the flame front location. Figures 6-13 and 6-14 show the central fuel swirler for this fuel nozzle design.

(2) The pilot dilution holes used for liquid fuel testing were blocked for the gas fuel design. This was done so that all the pilot zone reaction air would be channeled through the pilot air swirlers to promote fuel/air mixing and avoid an extremely rich mixture in the pilot mixing cup.

(3) Gas fuel nozzles were installed in the eight main stage fuel nozzle positions in lieu of the air atomizing liquid fuel nozzles which had been used in Phase I tests. The main stage gas fuel nozzles for the lean-lean combustor are identical to the outer gas fuel nozzles for the rich-lean combustor, Concept 2, with the exception that the gas fuel metering holes are larger (4.15 mm diameter in lieu of 2.91mm diameter).

ORIGINAL PAGE
BLACK AND WHITE PHOTOGRAPH

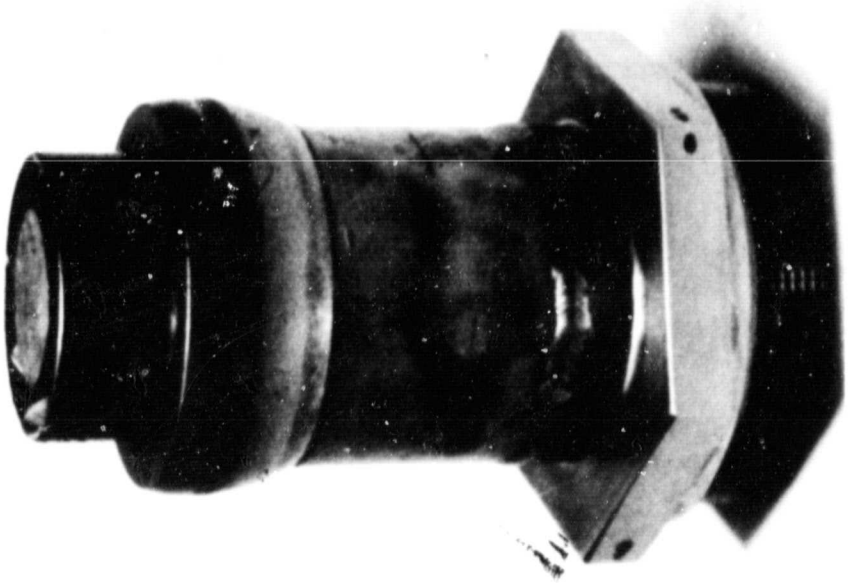

Figure 6-13
PILOT FUEL NOZZLE FOR LEAN/LEAN COMBUSTOR, CONCEPT 4

ORIGINAL PAGE
BLACK AND WHITE PHOTOGRAPH

Figure 6-14
PILOT FUEL NOZZLE FOR LEAN/LEAN COMBUSTOR, CONCEPT 4

Figure 6-15 shows the lean-lean combustor liner and pilot gas fuel nozzle assembly. Tables 6-3 and 6-4 present the airflow splits and equivalence ratios as designed for gas fuel testing of Concept 4. A test plan was prepared for this combustor. However, the tests were not performed due to insufficient program resources. This combustor hardware is now available for testing early in the Phase II program.

6.3 CATALYTIC COMBUSTOR

The catalytic combustor, developed in the Phase I liquid fuel test program and identified as Concept 8, is described in detail in the Final Report for Phase I. A schematic of the combustor concept is presented in Figure 6-16. The combustor consists of three major sections: fuel preparation section, catalytic reactor stage, and the pilot stage.

A multiple nozzle fuel preparation section precedes the catalytic reactor stage. This section, with seven fuel nozzles, provides for premixing of the fuel-air mixture and prevaporization of liquid fuel. A 38 cm (15-inch) length is provided for thorough premix of liquid and LBtu/IBtu gas fuels. This is followed by a 12.5 cm (5-inch) long section holding the main stage catalytic reactor, which consists of MCB-12 zirconia spinel substrate coated with a proprietary UOP noble metal catalyst. The reactor stage is followed by the downstream pilot stage section which is used for ignition, acceleration, and part-load operation to 50% load (at which point reactor lightoff occurs for further load increase to full power).

The pilot-stage section of lean-lean combustor Concept 6 of the Phase I program was modified for use as the pilot stage section for the catalytic

ORIGINAL PAGE
BLACK AND WHITE PHOTOGRAPH

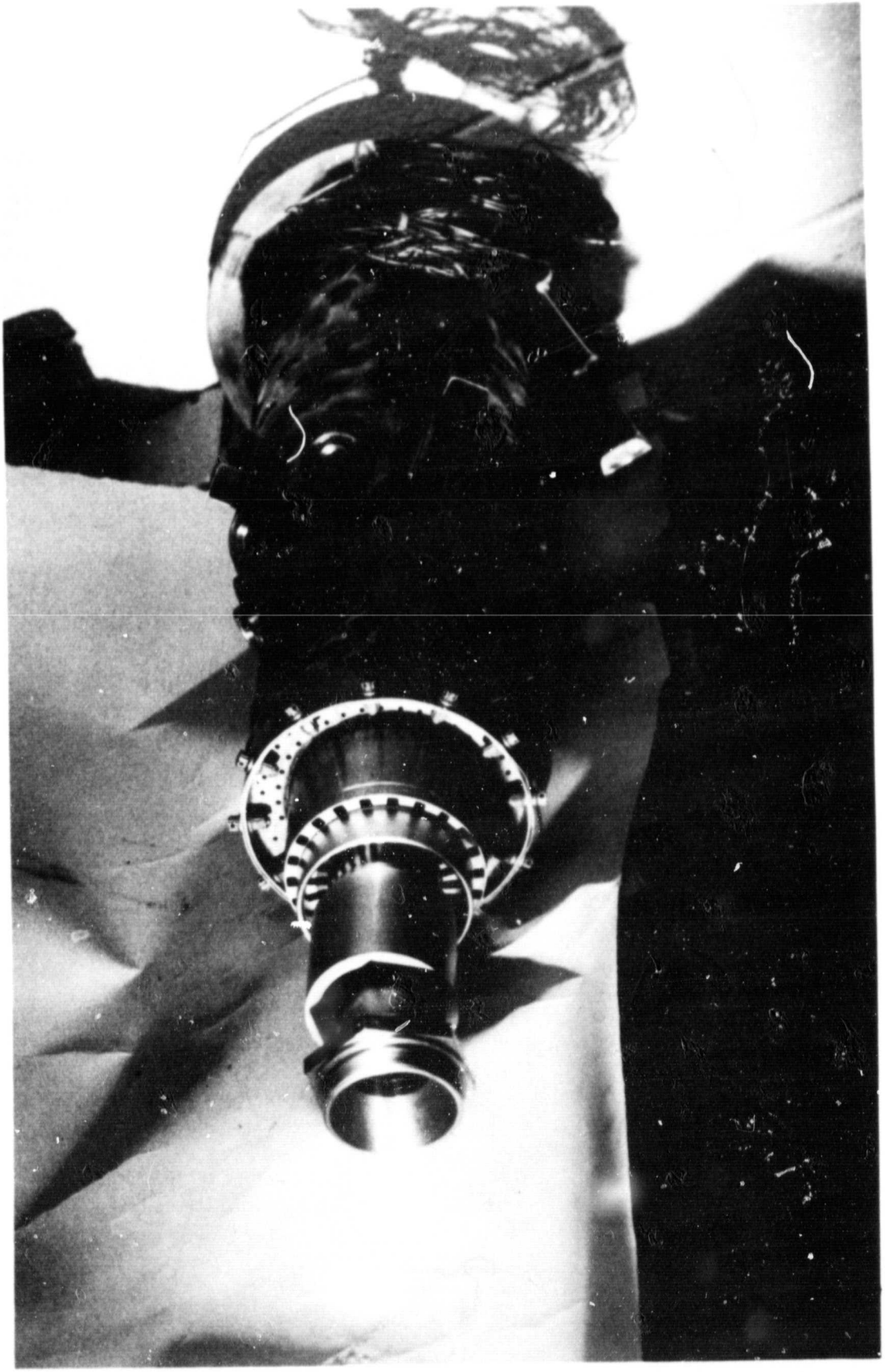

Figure 6-15
GAS FUEL CONFIGURATION LEAN/LEAN COMBUSTOR, CONCEPT 4

Table 6-3

CONCEPT 4 FLOW SPLITS

Pilot Stage Air Swirlers	14.2%
Dome Cooling	2.7%
Liner Cooling	15.1%
Total Pilot Stage	32.0%
Main-Stage Dome Swirlers	34.5%
Dome Cooling	6.5%
Dilution	13.0%
Liner Cooling	14.0%
Total Main Stage	68.0%

Table 6-4

CONCEPT 4 COMBUSTOR EQUIVALENCE RATIOS
(Pilot/Main Fuel Split = 35/65
244 Btu/scf Fuel)

Load Condition	50% Pilot Only	50% Both Stages	92% (Base) Both Stages	100% (Peak) Both Stages
Overall Fuel/Air Ratio	0.0580	0.0580	0.1041	0.1110
Percent Pilot Fuel	100	35	35	35
Overall Equivalence Ratio	0.161	0.161	0.289	0.309
ϕ Pilot Swirl Cup	1.134	0.397	0.712	0.762
+ Dome Cooling	0.953	0.333	0.599	0.640
+ Pilot Liner Cooling	0.503	0.176	0.316	0.338
ϕ Main Dome	0	0.303	0.544	0.582
+ Main Stage Cooling	0	0.255	0.458	0.490
ϕ Total Combustion	0.22	0.22	0.40	0.42

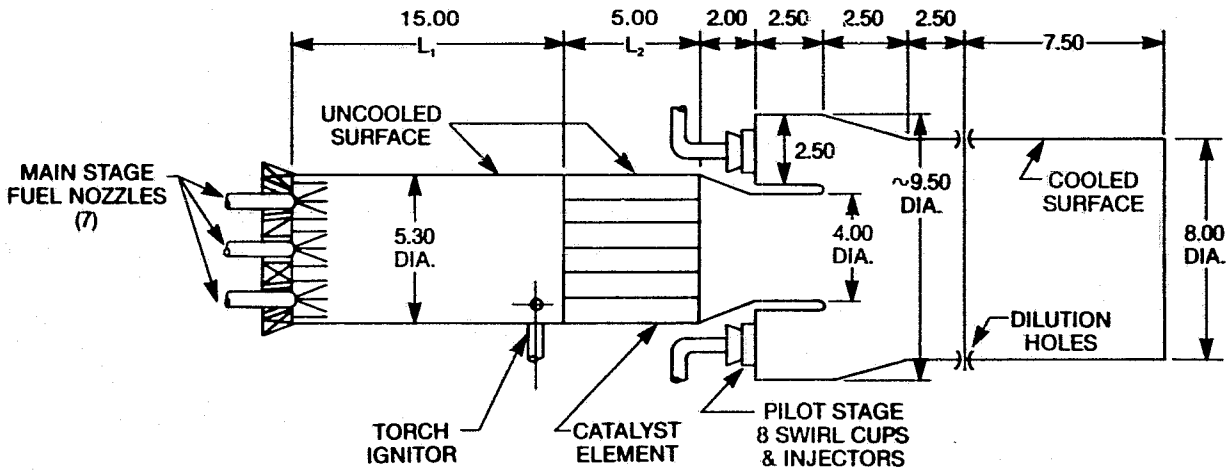

DIMENSIONS IN INCHES

ORIGINAL PAGE IS OF POOR QUALITY

Figure 6-16
PARALLEL-STAGED LEAN REACTION CATALYTIC COMBUSTOR, CONCEPT 8

combustor. This cost saving application, shown in Figure 6-17, produced the final hardware design shown in the photograph of Figure 6-18. Figure 6-19 is a close-up view showing the instrumented reactor section and the transition to the multinozzle pilot stage.

Figure 6-20 presents the fuel scheduling required for this parallel-staged design to meet the load requirements of an MS7001E turbine. As can be seen, the combustor for this turbine application would ignite on pilot stage fuel flow. Fuel flow would be increased to the pilot stage to increase the exit temperature to that required for 50% load. At that point, fuel flow to the combustor is sufficiently high to ignite the reactor stage at a fuel-air ratio of approximately 0.020. The pilot stage fuel flow would then be ramped down to a low flow sufficient to retain pilot operation for cleanup of exhaust gas from the reactor section. Further increase in load to approximately 80% would be achieved by increasing reactor stage fuel flow to a fuel-air ratio of approximately 0.030 in the reactor. This limit would provide reactor temperatures meeting required limits for reactor durability. Further increases in load would be accomplished by increasing pilot stage fuel flow.

Design air flow splits at the baseload (92%) point were as follows:

Catalyst - Main Stage		60%
Pilots		
Dome Cooling	5%	
Swirlers	12%	
		17%
Liner Cooling		15%
Dilution		8%
		100%

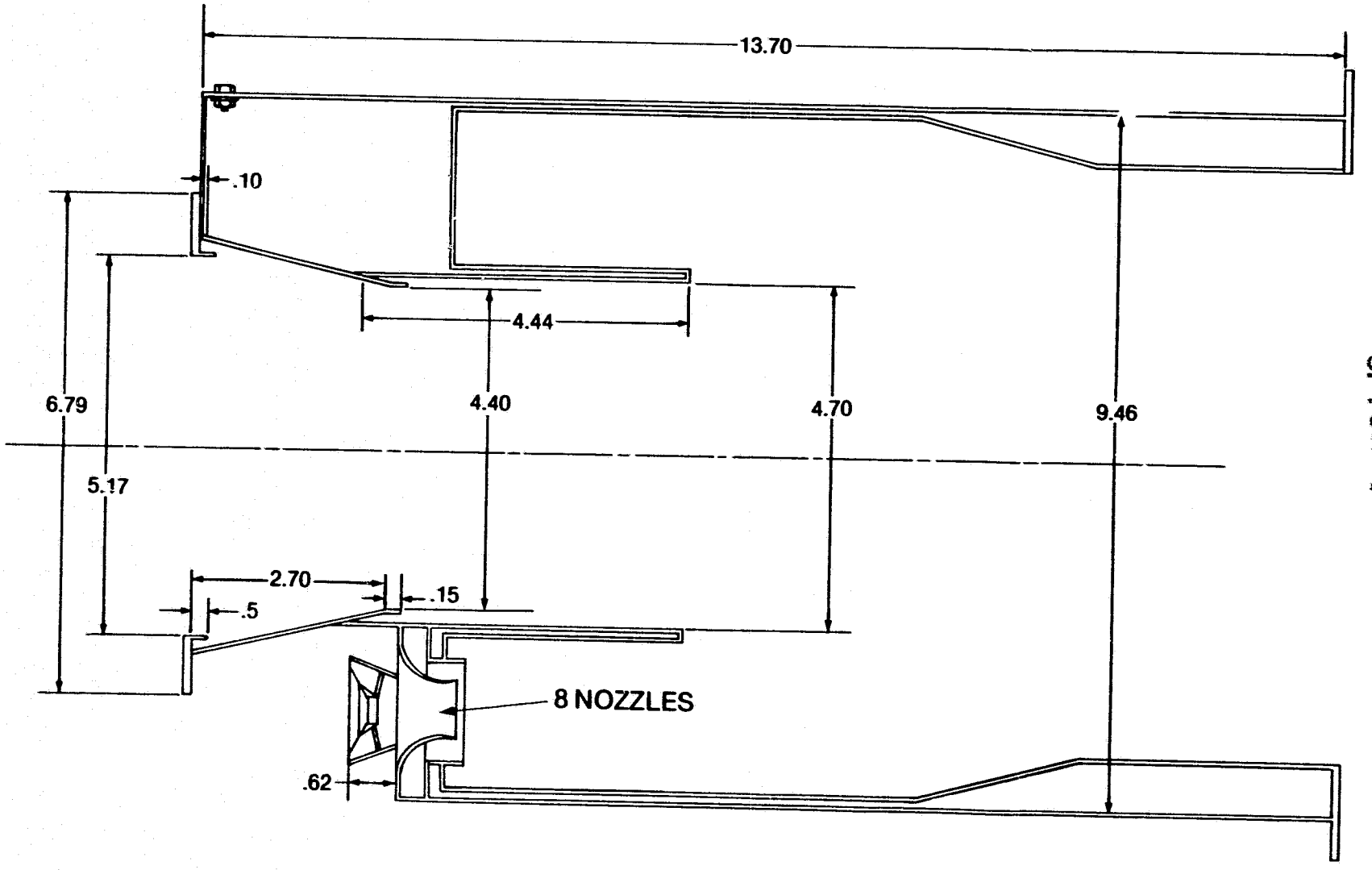

DIMENSIONS IN INCHES

Figure 6-17
CATALYTIC COMBUSTOR PILOT STAGE

ORIGINAL PAGE IS
OF POOR QUALITY

ORIGINAL PAGE
BLACK AND WHITE PHOTOGRAPH

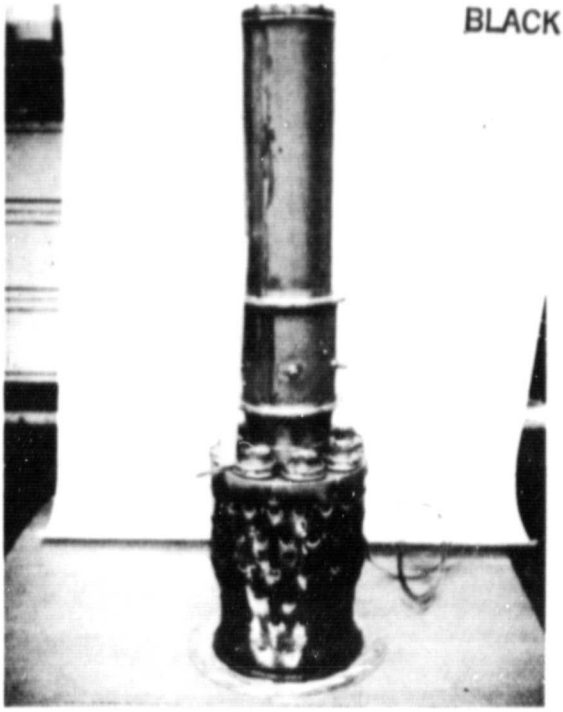

Figure 6-18
CATALYTIC COMBUSTOR, CONCEPT 8

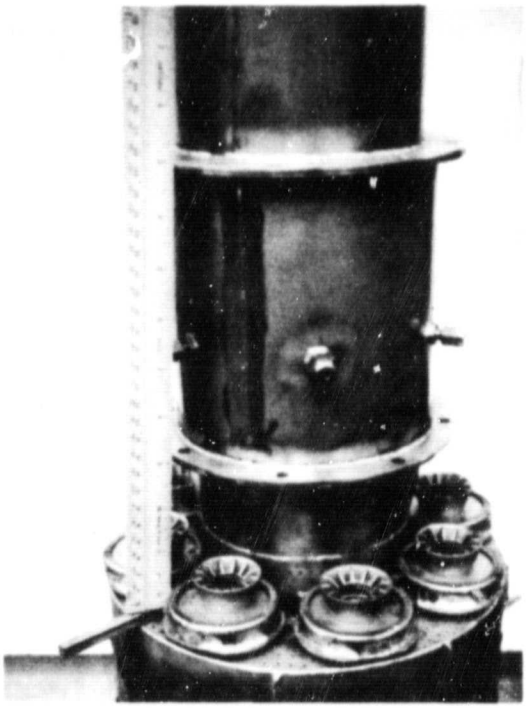

Figure 6-19
REACTOR SECTION/PILOT STAGE

ORIGINAL PAGE IS
OF POOR QUALITY

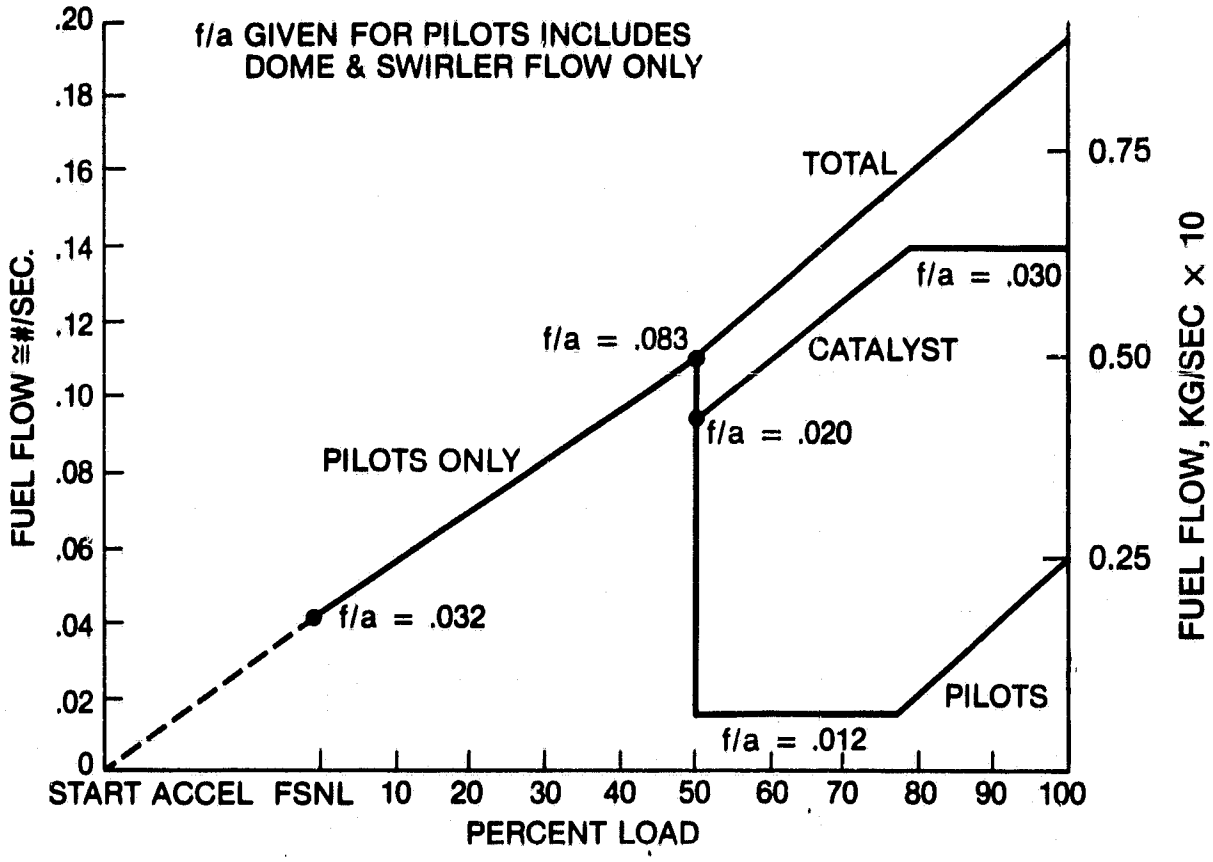

Figure 6-20
FUEL SCHEDULE—CONCEPT 8 MS7001E-CYCLE, 60/40 AIRFLOW SPLIT

However, cold flow testing established that the catalyst received only 42% airflow at cold conditions. Although significantly less than the design level, it was decided to proceed with combustor tests by reducing fuel flow to the reactor section to achieve a fuel-air ratio (and, therefore, reactor temperature) corresponding to the 92% load condition.

Since past experience had shown reactor ignition to be achievable with inlet air temperatures of approximately 644°K (700°F), the originally planned torch ignitor was not included in the final test hardware configuration.

Combustor instrumentation consisted of thermocouples located as follows (refer to Figures 7-19 and 7-20):

- Four thermocouples embedded in the catalytic reactor to monitor catalyst performance and to guard against over temperature conditions in the reactor.

- Four thermocouples on the outer surface of the premix tube to monitor flashback.

- Three thermocouples on the converging cone at the reactor exit to monitor temperatures on this uncooled section.

- Four thermocouples on the pilot stage primary zone to monitor primary zone stability and metal temperature.

- Two thermocouples on the dilution zone to monitor combustor cooling.

SECTION 7

TEST RESULTS

7.1 RICH-LEAN COMBUSTOR, CONCEPT 2

Table 7-1 summarizes the operating data for testing of the rich-lean combustor, Concept 2, on gas fuel in the GTDL high pressure test stand No. 4. The design cycle used to establish test operating conditions was scaled from MS7001E turbine conditions. Operating temperatures and pressures correspond to the MS7001E turbine cycle. Test combustor airflow was scaled from MS7001E conditions to conserve mass flux, i.e., flow per unit area. Table 7-2 presents a summary of the scaled cycle conditions. The combustor test points are based upon maintaining a constant total combustor flow (air plus fuel) across the load range, as would be the case for an MS7001E turbine designed for operation on coal gas fuel. With the exception of one data point (point 6A of Table 7-1), all testing was performed at half pressure/half flow conditions. This was done to conserve fuel gas and so maximize the amount of data obtained with the limited quantity of tube trailer gas available. The single data point at full pressure was run to obtain a correlation between NO_x emissions data at full and half pressures. The full pressure data showed an increase in NO_x emissions index (corrected to ISO conditions) of approximately 50% for an increase in pressure by a factor of 2.26. This result was expected since prior investigations have shown the NO_x emissions for gas turbine combustors are approximately proportional to the square root of pressure (References 1, 2).

Data were taken at a minimum of three (3) test points for each heating value. The three test points were selected to operate the combustor over the

Table 7-1

CONCEPT 2 TEST

Test Point	Reference Conditions										Combustor Disch					
	Fuel Manifold Press. (psia)	Air Flow (lb/sec)	P_3 (psia)	T_3 (°F)	ρ_3 (lb/ft^3)	Total Fuel (lb/sec)	Tank Gas (lb/sec)	N_2 (lb/sec)	NH_3 (lb/sec)	Fuel T (°F)	T_{avg} (°F)	O_2 (%)	CO_2 (%)	CO (ppmv)	NO_x (ppmv dry)	UH (ppm
3A	91.29	7.785	85.10	631	0.2097	0.823	0.823	0	0	416	1887	15.277	7.828	16	169	1
3B	95.74	7.800	84.57	633	0.2080	0.857	0.857	0	0	420	2093	13.960	9.581	62	190	1
3C	104.35	7.524	88.016	632	0.2167	0.997	0.997	0	0	422	2343	12.363	11.894	260	216	1
4	74.157	8.230	73.325	596	0.1866	0.478	0.478	0	0	418	1451	17.356	5.212	32	58	1
5	91.380	7.551	81.139	642	0.1979	0.795	0.795	0	0	420	2074	14.214	9.392	53	181	1
6A	166.320	14.906	165.58	637	0.4057	(0.990)	(0.990)	0	0	422	1469	17.628	4.872	8	99	0
7	96.097	7.015	83.811	636	0.2056	(0.875)	(0.690)	0.185	0	422	1983	14.072	8.748	35	98	0
7A	102.140	7.148	83.465	637	0.2045	(1.020)	(0.833)	0.187	0	423	2215	12.814	10.577	168	121	1
8	76.110	7.717	73.149	597	0.1860	(0.600)	(0.522)	0.078	0	417	1483	17.128	5.187	36	39	1
9	96.670	7.254	81.619	648	0.1980	(0.940)	(0.741)	0.199	0	421	2048	13.737	9.228	67	101	1
11	113.437	7.204	81.897	642	0.1998	(1.282)	(0.797)	0.485	0	424	2173	12.043	10.401	254	56	1
12	79.190	7.933	71.084	596	0.1809	(0.753)	(0.482)	0.271	0	421	1466	16.705	5.092	44	15	1
13	107.503	7.320	80.599	647	0.1957	(1.194)	(0.752)	0.442	0	424	2072	12.793	9.606	122	51	1
16	74.493	7.806	73.544	599	0.1867	(0.512)	(0.510)	0	0.0019	405	1463	17.276	5.176	27	202	1
17	90.247	7.254	81.400	633	0.2002	(0.773)	(0.770)	0	0.0032	407	2057	14.260	9.283	52	340	1
18	95.580	7.085	82.993	631	0.2045	(0.864)	(0.861)	0	0.0023	409	2215	13.443	10.407	154	336	1
18A	94.080	7.088	83.194	634	0.2044	(0.825)	(0.823)	0	0.0008	409	2178	13.412	10.443	139	306	1
18B	94.297	7.112	83.240	637	0.2040	(0.832)	(0.831)	0	0.0005	410	2181	13.387	10.495	143	278	0
18C	95.170	7.087	83.508	637	0.2046	(0.843)	(0.843)	0	0	410	2201	13.327	10.616	153	212	0

Definitions:

ISO ≡ reference humidity level = 0.0063 gms H_2O/gm air

P.F. ≡ exhaust temperature pattern factor = $\frac{T_{max} - T_{avg}}{T_{avg} - T_3}$

ORIGINAL PAGE IS
OF POOR QUALITY

FOLDOUT FRAME

Table 7-1

ONCEPT 2 TEST DATA

Combustor Discharge Conditions									Stoichiometry			Performance Data					
	CO (ppmv)	NO_x (ppmv dry)	UHC (ppmv)	Smoke No.	Total ΔP (psi)	NO_x, ppmv at 15% O_2 (ISO)	ΔP/P (%)	P.F.	ϕ Rich Zone	ϕ Lean Zone	ϕ Overall	Max. Metal Temp. (°F)	EI NO_x (ISO)	% N Conv.	η (%)	Fuel LHV (Btu/scf)	$W_A^2T_3/P_3^2$ (in.^{2} °R/sec^2)
8	16	169	1	99	5.707	165	6.706	0.127	1.563	0.577	0.294	1245 (#9)	2.47	–	99.99	244.4	9.13
1	62	190	1	100	6.013	152	7.111	0.144	1.624	0.600	0.305	1434 (#8)	2.66	–	99.95	244.4	9.30
4	260	216	1	100	5.40	140	6.137	0.182	1.959	0.724	0.368	1471 (#8)	2.70	–	99.81	244.4	7.98
2	32	58	1	100	7.01	91	9.560	0.199	0.859	0.317	0.161	1014 (#8)	1.53	–	99.98	244.4	13.30
2	53	181	1	100	5.78	152	7.127	0.132	1.556	0.575	0.293	1448 (#8)	2.66	–	99.95	244.4	9.54
2	8	99	0	100	10.46	167	6.314	0.187	0.982	0.363	0.185	1035 (#8)	2.29	–	99.99	244.4	8.89
8	35	98	0	100	4.59	81	5.470	0.134	1.507	0.557	0.283	1313 (#8)	1.25	–	99.97	203.4	7.68
7	168	121	1	100	4.78	84	5.729	0.185	1.725	0.637	0.324	1489 (#8)	1.36	–	99.86	209.2	8.05
7	36	39	1	100	6.09	58	8.328	0.137	0.940	0.347	0.177	969 (#12)	0.77	–	99.95	219.9	11.76
8	67	101	1	99	5.13	79	6.284	0.149	1.566	0.578	0.294	1339 (#8)	1.24	–	99.94	203.3	8.75
1	254	56	1	100	4.98	35	6.084	0.176	1.687	0.623	0.317	1414 (#8)	0.52	–	99.77	167.0	8.53
2	44	15	1	100	6.56	20	9.225	0.164	0.900	0.332	0.169	969 (#3)	0.23	–	99.93	171.2	13.15
6	122	51	1	100	5.25	35	6.517	0.169	1.547	0.571	0.291	1302 (#8)	0.51	–	99.88	168.9	9.13
6	27	202	1	100	6.16	310	8.384	0.220	0.966	0.357	0.182	994 (#12)	4.73	34.6	99.96	242.7	11.93
3	52	340	1	99	5.10	286	6.261	0.132	1.569	0.580	0.295	1401 (#8)	4.93	23.9	99.95	243.8	8.68
7	154	336	1	100	4.78	252	5.909	0.202	1.797	0.664	0.338	1490 (#8)	4.28	20.6	99.88	243.6	7.95
3	139	306	1	100	4.87	229	5.860	0.149	1.717	0.634	0.323	1464 (#8)	4.07	66.2	99.89	241.9	7.94
5	143	278	0	100	4.88	208	5.867	0.149	1.727	0.638	0.325	1466 (#8)	3.69	78.1	99.88	245.6	8.01
6	153	212	0	100	4.85	167	5.806	0.182	1.759	0.650	0.331	1477 (#8)	2.77	–	99.88	244.4	7.90

ORIGINAL PAGE IS
OF POOR QUALITY

FOLDOUT FRAME

Table 7-2

CONCEPT 2 DESIGN CYCLE CONDITIONS

Fuel Lower Heating Value (LHV) (Btu/scf)	MS7001E Load Condition (% Load)	T_3, Inlet Total Temp. (°K)	(°F)	P_3, Inlet Total Press. MPa	(psia)	$T_{3.95}$ (1) (°K)	(°F)	W_a Combustor Airflow (kg/sec)	(pps)	f/a Overall Fuel-Air Ratio	ϕ_o (2)	W_t Total Flow (kg/sec)	(lb/sec)	$\Delta P/P$ (3) (%)
244	100 (peak)	608	636	1.165	169	1472	2190	6.87	15.122	0.110	0.309	7.64	16.8	5.87
244	92 (base)	606	631	1.145	166	1412	2082	6.92	15.217	0.1040	0.289	7.64	16.8	6.15
244	50	587	598	1.028	149	1066	1460	7.26	15.974	0.0580	0.161	7.68	16.9	7.98
209	100 (peak)	608	636	1.165	169	1472	2190	6.69	14.724	0.1410	0.320	7.64	16.8	5.59
209	92 (base)	606	631	1.145	166	1412	2082	6.75	14.841	0.1320	0.300	7.64	16.8	5.88
209	50	587	598	1.028	149	1066	1460	7.11	15.634	0.0810	0.184	7.68	16.9	7.91
172	100 (peak)	608	636	1.165	169	1472	2190	6.44	14.177	0.1850	0.330	7.64	16.8	5.19
172	92 (base)	606	631	1.145	166	1412	2082	6.54	14.384	0.1680	0.300	7.64	16.8	5.51
172	50	587	598	1.028	149	1066	1460	6.94	15.266	0.1070	0.191	7.68	16.9	7.65

(1) Temperature at the entrance to the first-stage nozzle
(2) Overall combustor equivalence ratio
(3) $\Delta P/P$ = (liner total pressure drop)/P_3

ORIGINAL PAGE IS OF POOR QUALITY

MS7001E load range indicated in Table 7-2 (i.e. 50% to 100% load). For the baseline fuel (244 Btu/scf LHV), test points were also run at conditions which were richer and leaner than the design goal to investigate the effect of rich stage stoichiometry on NO_x emissions, i.e. the location of the NO_x minimum, if any, with equivalence ratio. Tests were also run with ammonia injected into the baseline fuel to determine the NO_x yield with fuel bound nitrogen. Data points were taken with varying stoichiometry and, at fixed stoichiometry (100% load), with varying ammonia injection level.

Table 7-1 presents the test data in a four element format: reference conditions, combustor discharge conditions, stoichiometry, and performance data. Definitions of key parameters tabulated in Table 7-1 are as follows:

1. REFERENCE CONDITIONS

Fuel Manifold Pressure - A measured parameter from a single static pressure tap in the gas manifold supplying the combustor fuel nozzles. Units are lbs/in^2 absolute (PSIA).

Air flow - Total air flow to the test stand which is measured by standard ASME metering orifices in the air supply lines. Units are lbs/sec.

P_3 - Total pressure of the combustion air, measured by total pressure probes at the inlet to the test stand. Units are lbs/in^2 absolute (PSIA).

T_3 - Total temperature of the combustion air measured by thermocouples at the inlet to the test stand. Units are degrees Fahrenheit (°F).

ρ_3 - Density of air entering the test stand calculated from P_3 and T_3. Units are lb/ft^3.

Total Fuel - Total flow rate of fuel entering the combustor. Values not in parentheses are measured using a calibrated turbine meter. Values in parentheses are calculated from measured values of fuel supply pressure and temperature at the manifold, combustion chamber static pressure and known fuel nozzle effective area. Units are lbs/sec. The equation used for calculating fuel flow is as follows:

$$m = A_{eff}\, P_2 \sqrt{\frac{2g_c}{RT_1}\,\frac{k}{k-1}\left(\frac{P_1}{P_2}\right)^{\frac{k-1}{k}}\left[\left(\frac{P_1}{P_2}\right)^{\frac{k-1}{k}} - 1\right]} \qquad \text{(Ref. 3)}$$

where

m = Total fuel flow

A_{eff} = Fuel nozzle effective area

g_c = a dimensional constant

k = ratio of specific heats, C_p/C_v

R = ideal gas constant

P_1 = Fuel pressure at manifold

T_1 = Fuel temperature at manifold

P_2 = Combustion chamber pressure

Tank Gas - Flow rate of fuel from tube trailers containing blends of carbon monoxide, carbon dioxide, hydrogen and nitrogen. Values not in parentheses are measured using a calibrated turbine meter. Values in parentheses are calculated by subtracting nitrogen and ammonia flows from total fuel flows. Units are lbs/sec.

N_2 - Nitrogen flow rate being blended into the fuel. These values were measured using standard ASME orifices. Units are lb/sec.

NH_3 - Ammonia flow rate blended into the fuel. Values are calculated using total fuel flow rate and fuel composition determined from analyses of on-line fuel gas samples. Units are lb/sec.

Fuel T - Temperature of the fuel entering the combustor as measured by a single thermocouple in the fuel supply manifold. Units are degrees Fahrenheit (°F).

2. COMBUSTOR DISCHARGE CONDITIONS

T_{avg} - Bulk temperature of the products of combustion determined by averaging the measured temperatures from twelve platinum-rhodium thermocouples located at the combustor exit. Units are degrees Fahrenheit (°F).

O_2, CO_2, CO, NO_x, UHC - Average emissions from the combustor determined by analysis of ganged samples from twelve gas sample probes located at the combustor exit. The samples were dried prior to analysis. Units for oxygen and carbon dioxide (O_2 and CO_2) are percent by volume. Units for carbon monoxide, oxides of nitrogen and unburned hydrocarbon (CO, NO_x and UHC) are parts per million by volume (PPMV).

Smoke Number - Von Brand Reflective Smoke Number (VBRSN) for the products of combustion measured from a gas sample drawn through a single point gas sample probe located at the combustor exit. A value of 100 on the Von Brand scale is a clear stack (i.e. no smoke).

Total ΔP - Total pressure drop from the test stand inlet to the combustor exit. This is a measured difference between P_3 and the average total pressure at the combustor exit as measured using the twelve gas sample/total pressure probes at the combustor exit manifolded together. Units are pounds per square inch (PSI)

NO_x @ 15% O_2 (ISO) - Calculated value for NO_x emissions in the products of combustion (dry sample basis) determined by adjusting the measured NO_x emissions to the level which would be measured at 15% oxygen in the products of combustion with combustor inlet air at ISO humidity; i.e. 0.0063 grams of water vapor per gram of air, corresponding to the EPA emissions standard. The equations used in making the analytical adjustments are as follows:

$$(NO_x)_{15\%\ O_2} = (NO_x)_{ISO} \times \left[\frac{20.949 - 15}{20.949 - (Vol\%\ O_2)_{measured}}\right]$$

where,

$$(NO_x)_{ISO} = (NO_x)_{measured} \times e^{[19(H-0.0063)]}$$

H = measured weight fraction water vapor in the inlet air

The units in Table 7-1 are parts per million by volume (PPMV).

<u>$\Delta P/P$</u> - Percent total pressure drop across the combustor (airside) calculated as follows: $(\Delta P/P_3) \times 100$.

<u>P.F.</u> - Pattern Factor calculated using the following equation:

$$P.F. = \frac{T_{max} - T_{avg}}{T_{avg} - T_3}$$

where T_{max} = maximum measured temperature of the twelve combustor exit thermocouples.

3. <u>STOICHIOMETRY</u>

<u>Ø Rich Zone</u> - Mass equivalence ratio for the rich stage of the combustor based upon total fuel flow and calculated rich stage airflow. Rich stage airflow was calculated from measured total airflow and airflow splits which were determined from cold flow testing of the as-built liner.

Ø Lean Zone - Mass equivalence ratio for the lean stage of the combustor based upon total fuel flow and calculated rich stage plus quench air flow. The latter flows were calculated from measured total airflow and airflow splits determined from cold flow testing of the as-built liner.

Ø Overall - Overall mass equivalence ratio for the entire combustor based upon total fuel flow and measured total airflow.

4. PERFORMANCE DATA

Max Metal Temp - Maximum liner metal temperature as measured by the sixteen metal surface thermocouples mounted on the liner. The number in parentheses below each temperature is the position of the thermocouple recording the maximum temperature. All temperature values are in degrees Fahrenheit.

E.I. NO_x (ISO) - NO_x Emissions Index; i.e. grams NO_x produced per kilogram of fuel consumed, at ISO humidity. The adjustment in NO_x production from actual to ISO humidity is made using the equation presented in the preceding text, Section 2.

% N Conv. - Percentage of the fuel bound nitrogen (FBN) converted to NO_x, also termed the yield (Y). This parameter is calculated using the following equation

$$Y = \frac{(NO_x) \text{ with FBN} - (NO_x) \text{ without FBN}}{(NO_x) \text{ all FBN converted to } NO_x} \times 100$$

The values of NO_x with and without FBN are the measured NO_x emissions data at the same operating conditions with and without ammonia injection. The denominator in this equation is a calculated value based on the assumption that all the nitrogen in the ammonia is converted to NO_x.

η - Combustion efficiency is calculated using the following relationship:

$$\eta = \frac{\text{THEORETICAL MAXIMUM HEAT RELEASE - HEAT NOT RELEASED}}{\text{THEORETICAL MAXIMUM HEAT RELEASE}} \times 100$$

The theoretical maximum heat release is calculated using the total flow rate and fuel heat value. The heat not released is calculated using the measured emissions data (CO) and the calculated heat release for complete oxidation of the combustible emissions.

<u>Fuel LHV</u> - Fuel Lower Heating Value is calculated based on chemical analyses of the fuel as supplied by the fuel vendor or, for test points with ammonia injection, as measured using gas chromatography. Units are British Thermal Unit per Standard Cubic Foot (BTU/SCF).

<u>$W_A^2\ T_3/P_3^2$</u> - Combustor airflow function calculated using measured total airflow, T_3 and P_3. Units are $(LB^2/SEC^2)(°R)(IN^4/LB^2)$.

Figure 7-1 presents the NO_x emissions data for Concept 2 in units of ppmv. The NO_x goal for this program is 94.3 ppmv, based on the EPA guideline of 75 ppmv corrected for an MS7001E turbine heat rate of 10855 BTU/KWHR. The latter heat rate is for an MS7001E turbine operating on distillate fuel oil. Although not precise for the gas fuels tested in this program, it is a reasonable approximation to values which might be expected for simple cycle MS7001E operation with medium heating value coal gases. Figure 7-2 presents the same data in the form of NO_x Emissions Index (EI), gms NO_x/kg fuel. These data show that the test combustor, as configured for the single Phase 1A test, did not meet the NO_x goal for the 244 Btu/scf baseline fuel. For the baseline fuel diluted to the 203-220 Btu/scf lower heating value (LHV) range, measured emissions at half cycle pressure met the goal but would exceed the goal when corrected to full pressure conditions by a factor proportional to the square root of the pressure. With fuel diluted to the 167-171 Btu/scf LHV range, the half pressure data show NO_x emissions well below the goal; and, again assuming NO_x emissions proportional to the square root of pressure, it is projected that the test combustor would meet the EPA limit at full pressure. In fact, NO_x emissions would be approximately one-half the goal.

Figure 7-3 presents a comparison of uncorrected NO_x emissions data (uncorrected for humidity or oxygen concentration) for Concept 2 and a conventional lean-burning combustor designed for an IGCC application. All plotted data for Concept 2 were obtained using the baseline 244 Btu/scf fuel. The lean combustor data were obtained using a similar fuel composition under similar operating conditions, with the exception that the lean combustor data were obtained at full cycle pressure while most of the Concept 2 data are at half pressure. The two combustors exhibit very similar NO_x emissions

ORIGINAL PAGE IS
OF POOR QUALITY

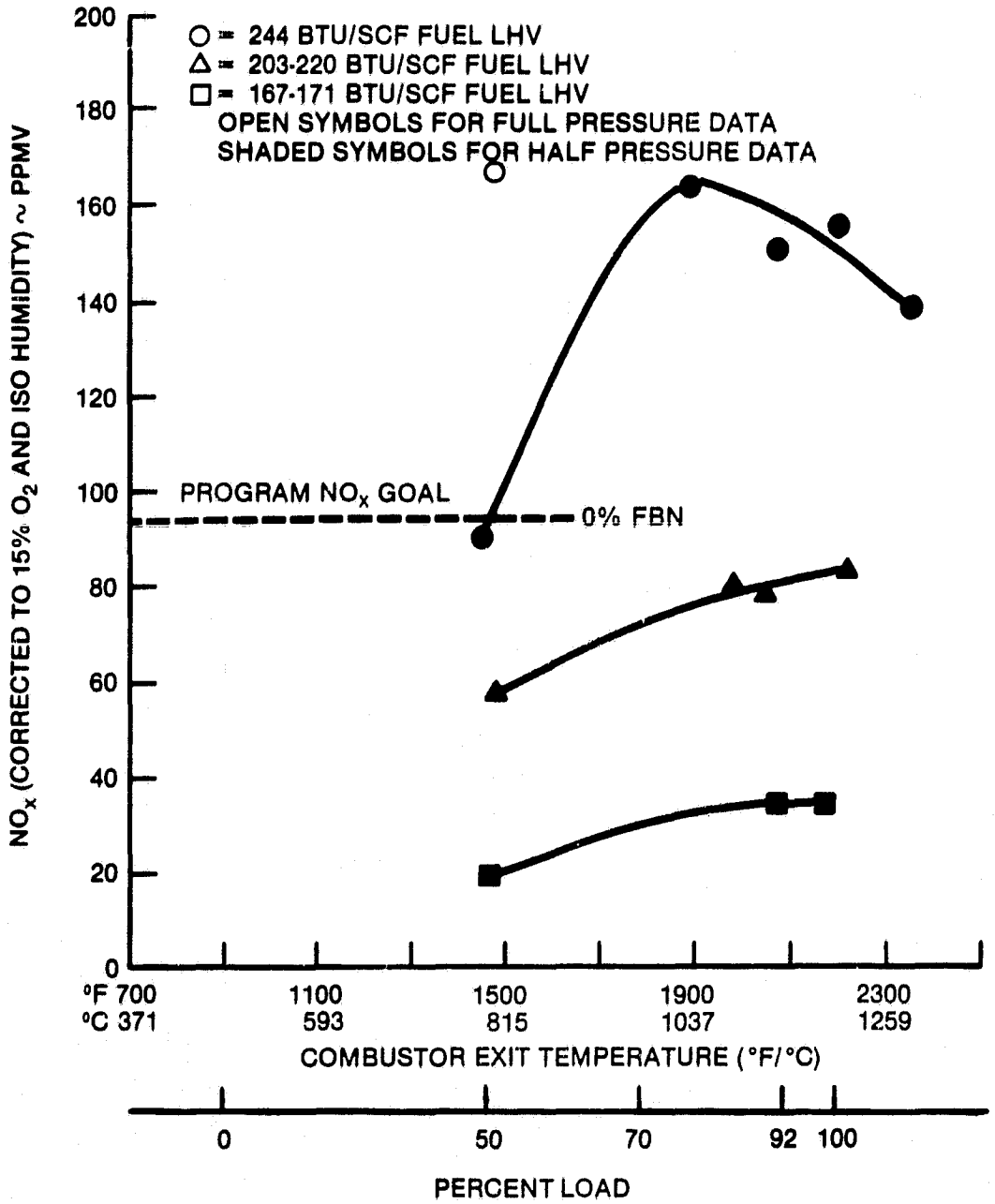

Figure 7-1
NO_x EMISSIONS VS LOAD FOR CONCEPT 2

ORIGINAL PAGE IS
OF POOR QUALITY

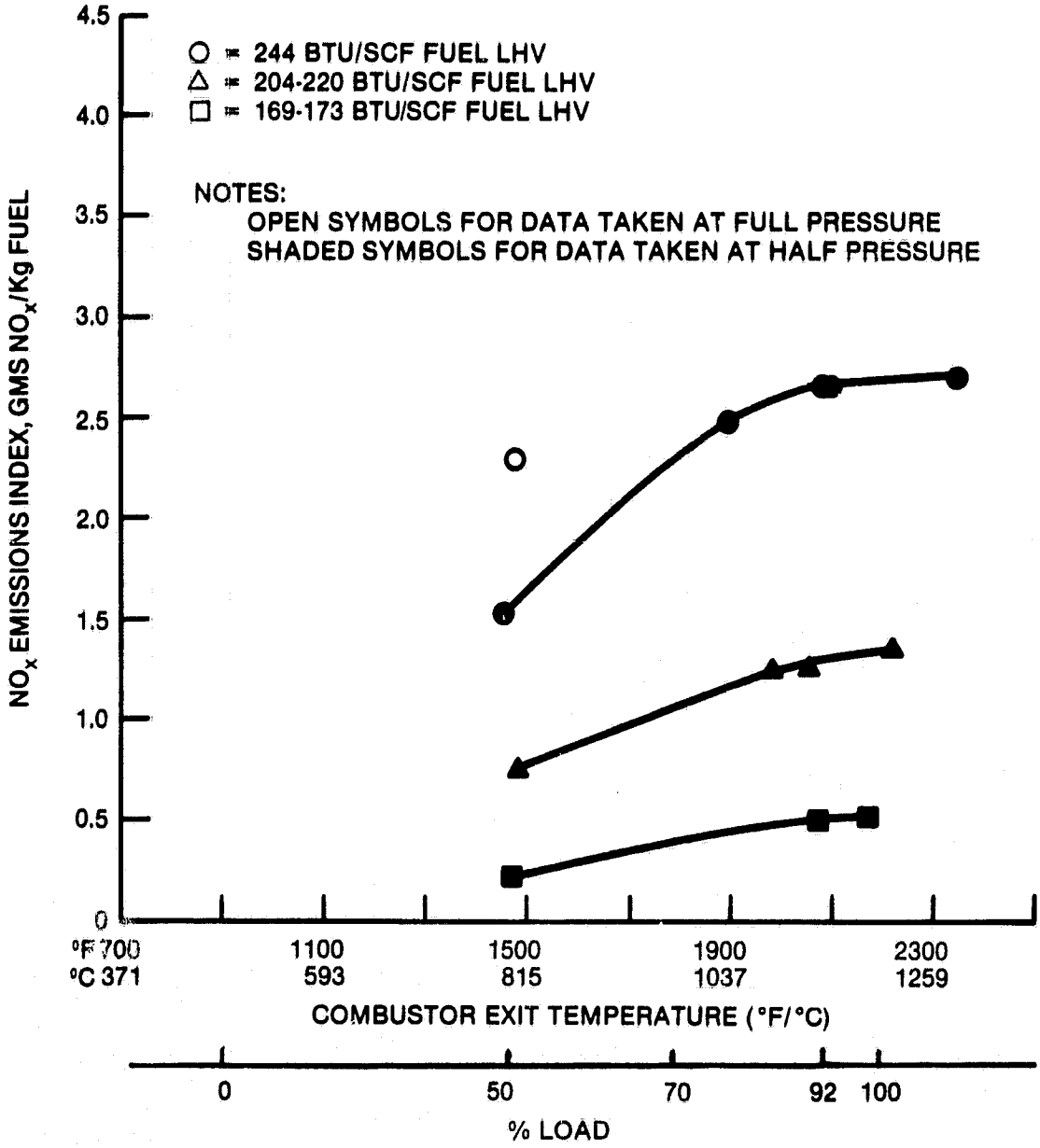

Figure 7-2
NO_x PERFORMANCE VS LOAD, CONCEPT 2 GAS FUEL

ORIGINAL PAGE IS
OF POOR QUALITY

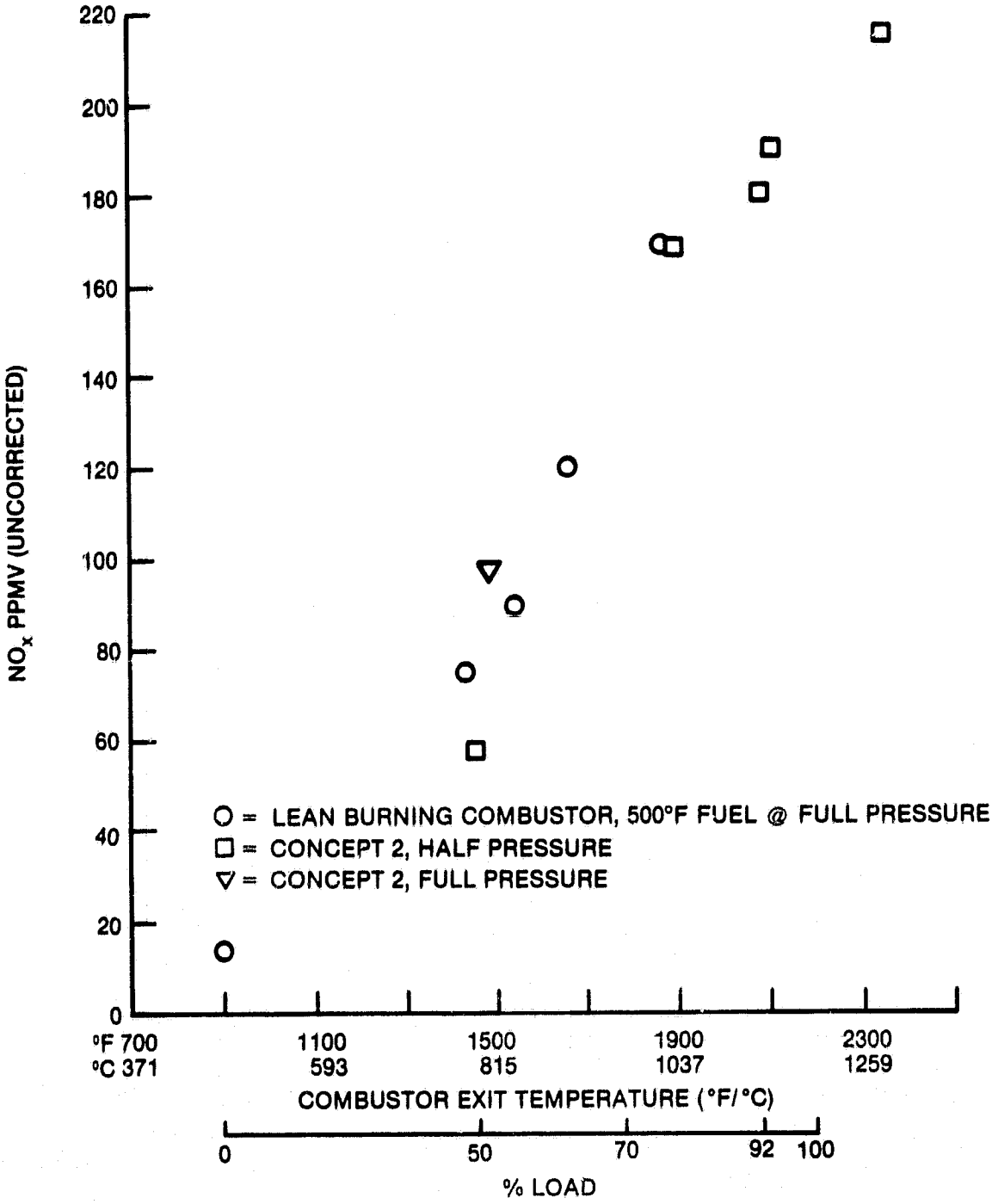

Figure 7-3
NO_x EMISSIONS COMPARISON FOR CONCEPT 2 AND LEAN BURNING COMBUSTOR

characteristics over the range of combustor exit temperature tested. Both show NO_x level to be a monotonically increasing function of combustor exit temperature. The half-pressure NO_x emissions for Concept 2 are slightly below the lean combustor data, but when corrected to full pressure the Concept 2 levels are slightly higher than the conventional combustor. This comparison demonstrates that the NO_x reduction expected from a properly configured rich-lean combustor was not obtained with the Concept 2 combustor using baseline fuel. The reasons for this will be discussed later, and are assumed to be associated with non-uniform rich stage fuel-air mixing. As noted in Figure 7-1, NO_x data at 244 Btu/scf (the baseline fuel) do suggest the beginnings of the usually-seen "bucket" curve for NO_x versus firing temperature or fuel-air ratio. NO_x is seen to peak at approximately 1310°K (1900°F) exit temperature, and then fall off rapidly, as expected for a properly designed rich-lean combustor (and seen for this combustor concept during the Phase I liquid fuel tests). However, a "bucket" minimum in the NO_x curve was not achieved. NO_x trends at lower heating values monotonically increase.

Tests were also conducted for Concept 2 with baseline fuel with ammonia injected to determine the effect of fuel bound nitrogen (FBN) on NO_x emissions. Figure 7-4 presents NO_x Emissions Index data for Concept 2 with ammonia injection, and Figure 7-5 presents a plot of NO_x yield from the fuel bound nitrogen versus the percent ammonia in the fuel. It is clear that the fuel bound nitrogen introduced from NH_3 substantially increased the NO_x emissions for the combustor at all test points. The NO_x yield from the fuel bound nitrogen was highest at the lowest ammonia injection rate and decreased with increasing ammonia injection rate. As also seen during the Phase I liquid fuel tests, NO_x yield of FBN falls off rapidly with FBN content and would

ORIGINAL PAGE IS
OF POOR QUALITY

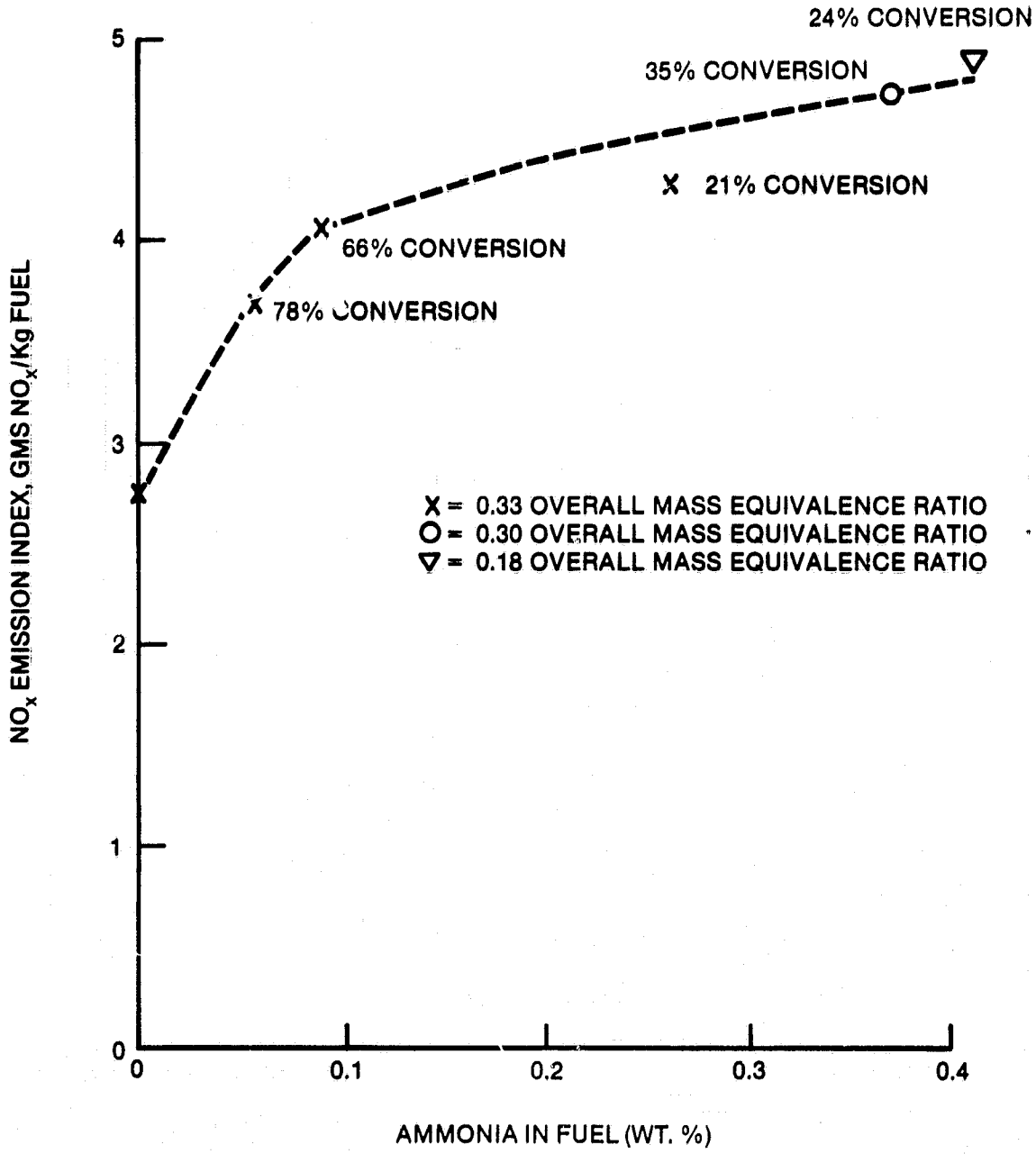

Figure 7-4
NO_x VS FUEL AMMONIA CONTENT, CONCEPT 2

C-2

ORIGINAL PAGE IS
OF POOR QUALITY

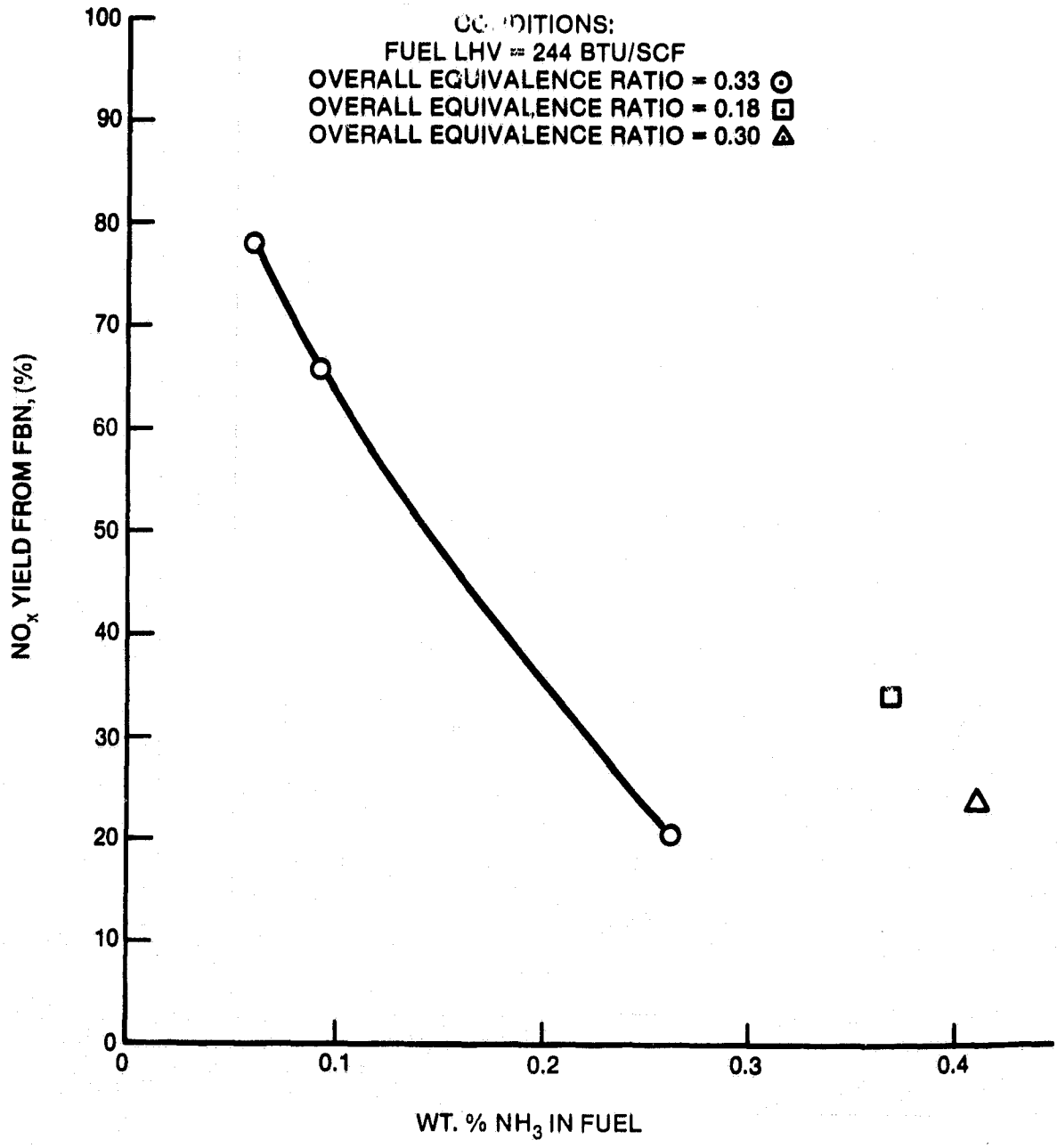

Figure 7-5
NO_x YIELD FOR CONCEPT 2—GAS FUEL WITH AMMONIA

appear, based on extrapolation of test data, to lead to yields of 10% or less at NH_3 concentrations exceeding 0.4%. This trend of decreasing yield with FBN content has been observed in the past when testing gas turbine combustors using liquid fuels with bound nitrogen and is discussed in Reference (4). Data for a conventional lean-burning combustor under similar operating conditions with ammonia injection are not available. It is, therefore, not known to what degree Concept 2 achieved a reduction in bound nitrogen conversion when compared to a conventional lean design.

Figures 7-6 thru 7-8 present exit gas temperature profiles for Concept 2 with the three fuel heating value levels. The magnitude of the spread in normalized temperature distribution is signigicantly larger than that experienced for Concept 2 with liquid fuels during Phase I of the program. Although within program goals, the temperature profiles for gas fuel peak strongly toward the center of the combustor while the exhaust profiles for liquid fuel tests of Concept 2 (see data for Concepts 2-1, 2-5 in Phase 1 Final Report) were relatively flat with a minor peak near 70 percent combustor exit height. Therefore, the gas fuel profile data suggest a relatively rich central core flow at the highest temperatures.

As noted above, exhaust profile data indicate a relatively rich central core, which likely existed even more strongly in the rich stage prior to quench air admission. The rich core persisted through the rich and quench stages with burning similar to a conventional lean combustor in the lean stage. This is supported by the observation that the center fuel nozzle (delivering 71% of the total fuel flow, with 8.8% of the combustor air) is a low swirl design which tends to concentrate all the fuel in a jet central to the rich-stage body, and does not produce a central recirculation zone. The smaller outer fuel nozzles

ORIGINAL PAGE IS
OF POOR QUALITY

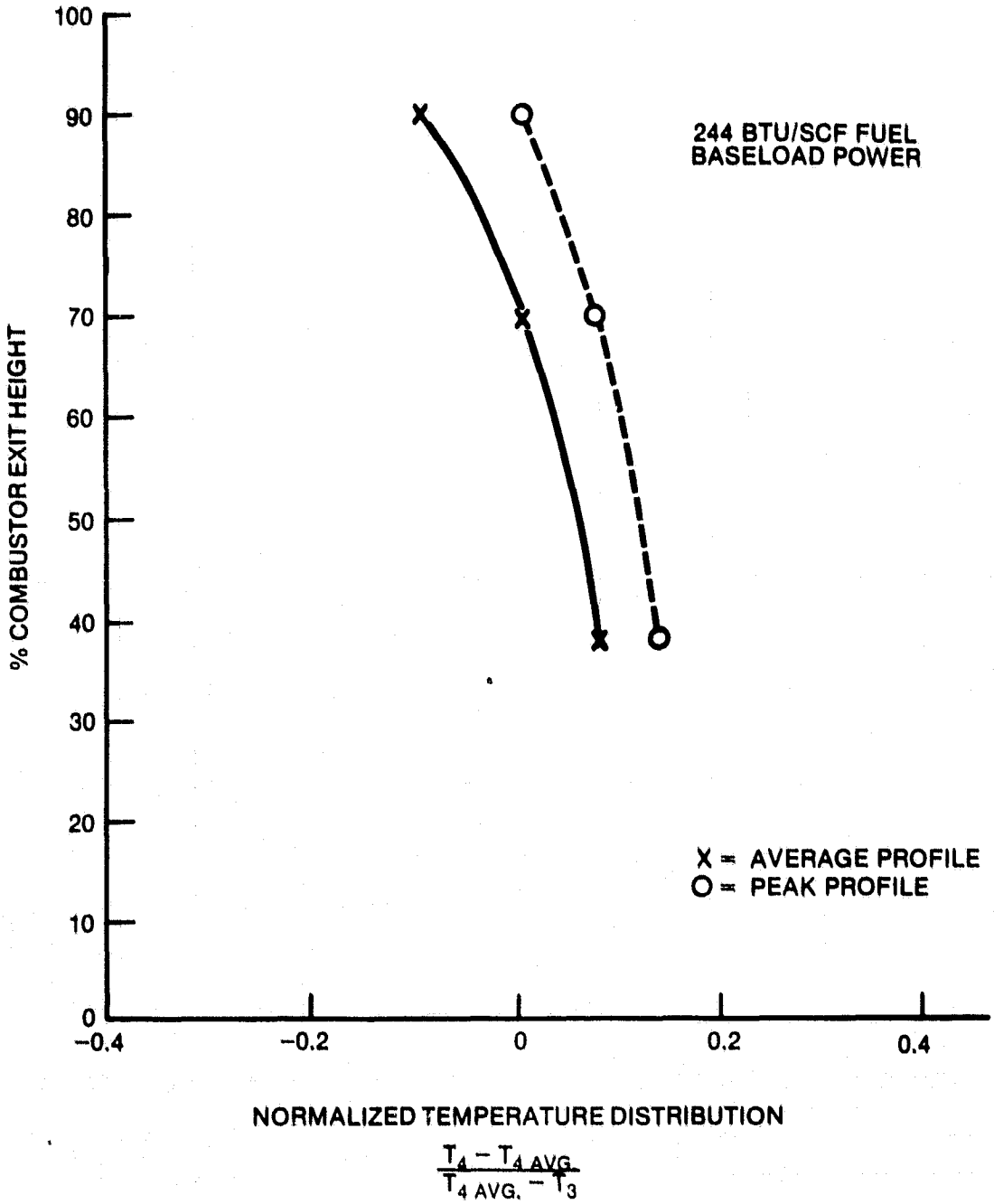

Figure 7-6
EXIT TEMPERATURE DISTRIBUTION, CONCEPT 2 AT BASELOAD

ORIGINAL PAGE IS
OF POOR QUALITY

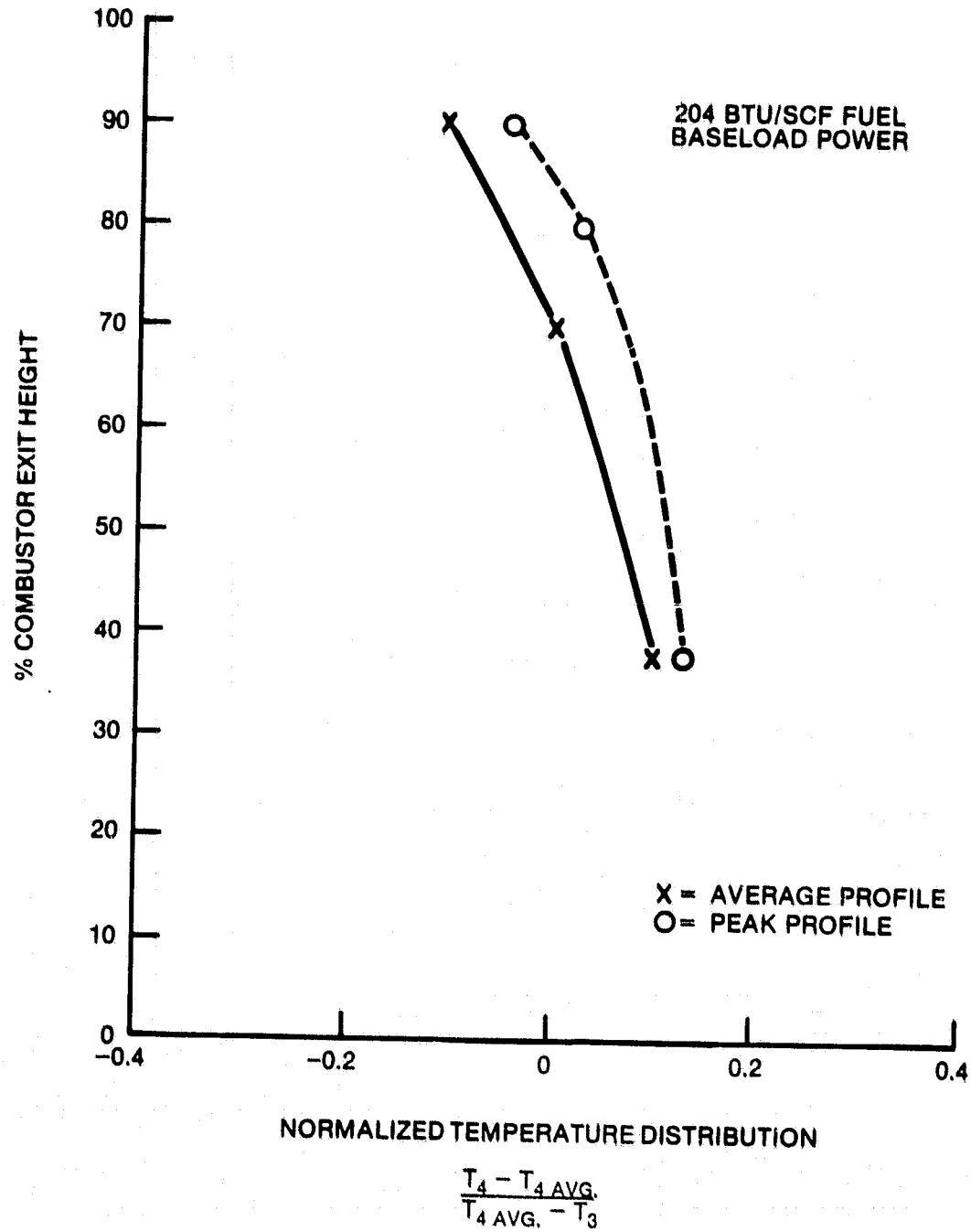

Figure 7-7
EXIT TEMPERATURE DISTRIBUTION, CONCEPT 2 AT BASELOAD

ORIGINAL PAGE IS
OF POOR QUALITY

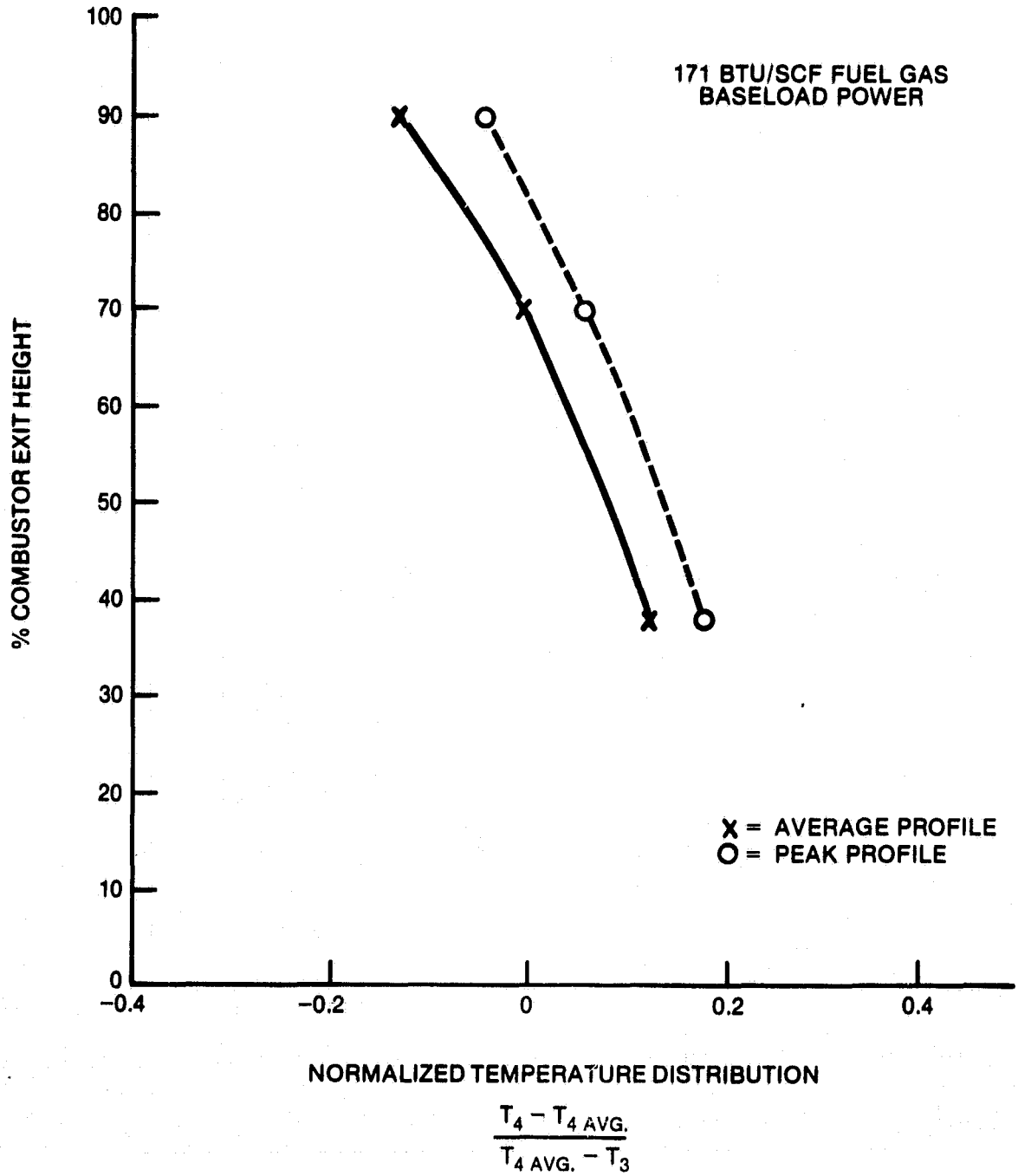

Figure 7-8
EXIT TEMPERATURE DISTRIBUTION, CONCEPT 2 AT BASELOAD

deliver 29% of the fuel, with 6.5% combustor air. It is thus assumed that rich-stage fuel-air mixing was inadequate, leading to burning closer to stoichiometric than desired in a lean annular zone around a rich central core. This would lead to high thermal NO_x as seen for this rich-lean combustor when compared to a conventional lean-burning combustor (refer Figure 7-3).

Improvement in thermal NO_x performance and yield would thus be expected to be achieved with improvement of rich stage fuel-air mixing. Because of resource limitations in the Phase 1A gas test program, modification of the rich-stage mixing configuration to improve performance was not possible. However, clear direction is now available for further development at the onset of Phase II.

Aside from the poor thermal NO_x performance at high fuel heating values, Concept 2 provided fully satisfactory performance. Figure 7-9 presents CO emissions data for Concept 2 which show CO in the products of combustion was less than 300 ppmv for all fuels at all conditions tested. For the baseline fuel in the range from 50 to 100 percent load, CO was always less than 100 ppmv. The CO emissions data were used to compute combustion efficiencies which exceeded 99.8 percent for the baseline fuel.

Von Brand Reflective Smoke Numbers (VBRSN) were 99 to 100 for all fuels at all test points. These data show smoke-free combustion at all operating conditions. Test data also show no unburned hydrocarbon (UHC) in the products of combustion. Since there were only trace amounts of hydrocarbon in the fuel based on gas sample analyses, this result was expected.

Measured liner metal temperatures for Concept 2 are shown for three fuel heating value levels in Figures 7-10, 7-11, and 7-12. The highest temperature recorded at any location during the entire test program was 1083°K (1490°F)

ORIGINAL PAGE IS
OF POOR QUALITY

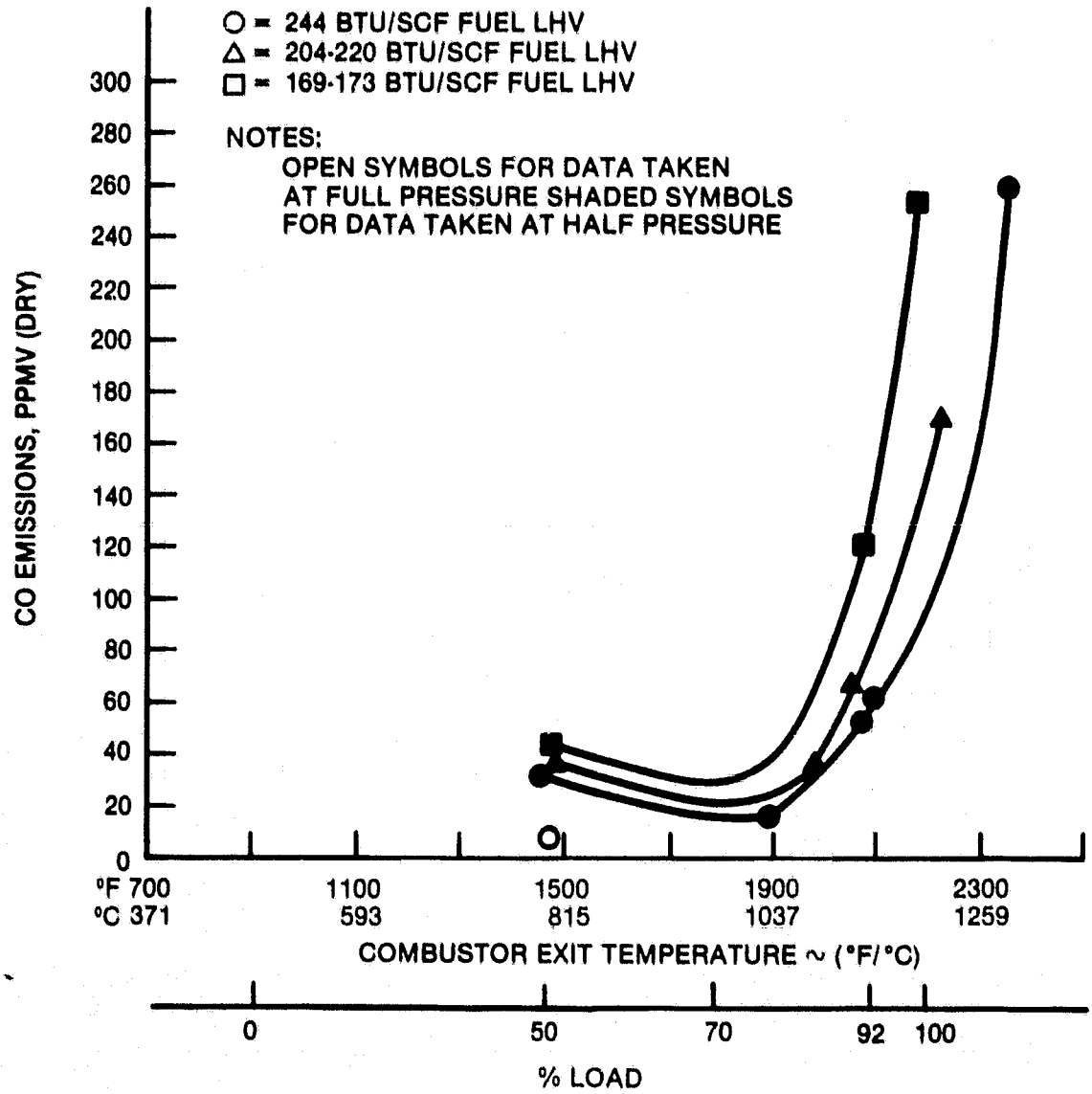

Figure 7-9
CARBON MONOXIDE EMISSIONS VS LOAD FOR CONCEPT 2

ORIGINAL PAGE IS
OF POOR QUALITY

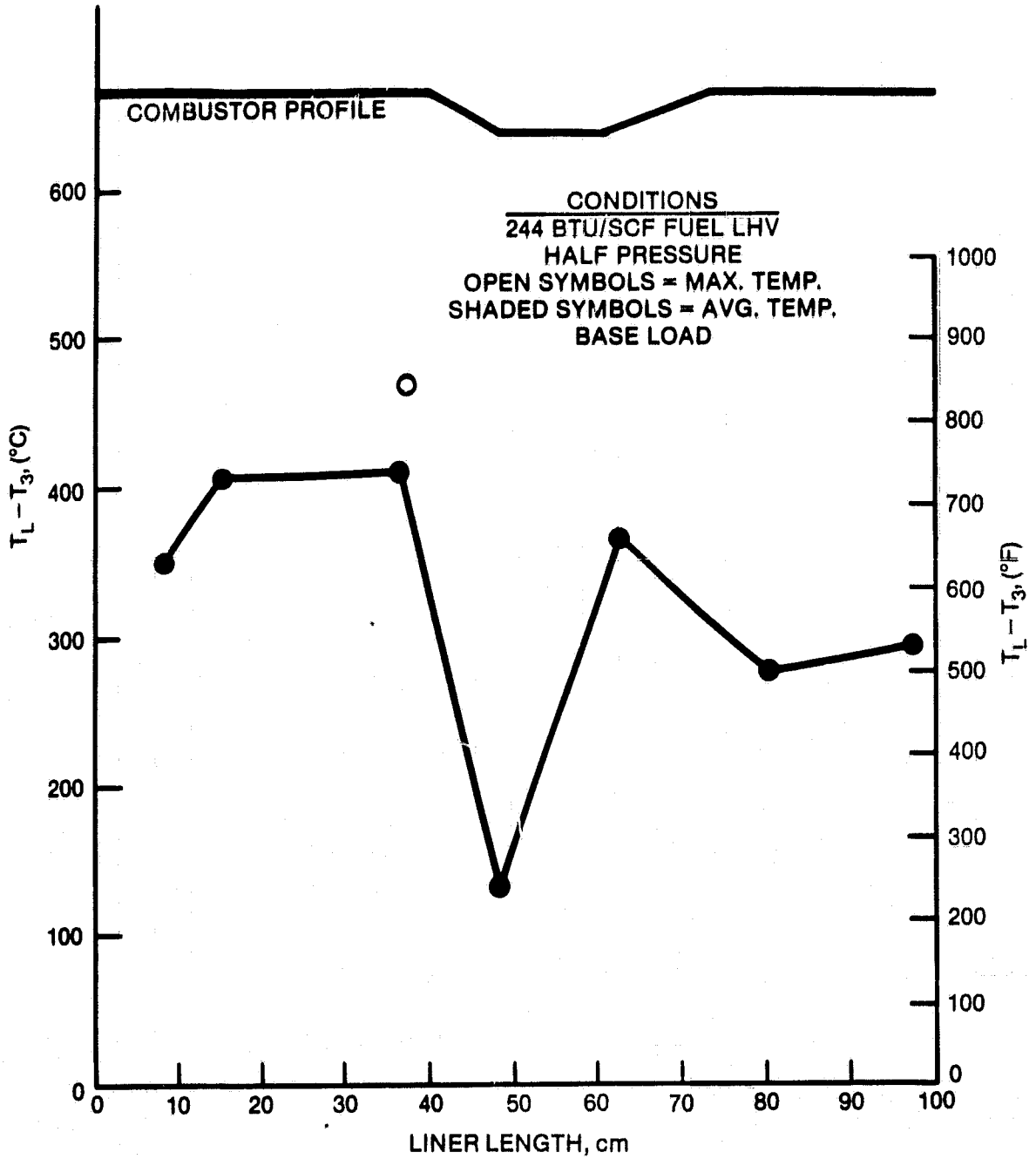

Figure 7-10
LINER METAL TEMPERATURES, CONCEPT 2—GAS FUEL

ORIGINAL PAGE IS
OF POOR QUALITY

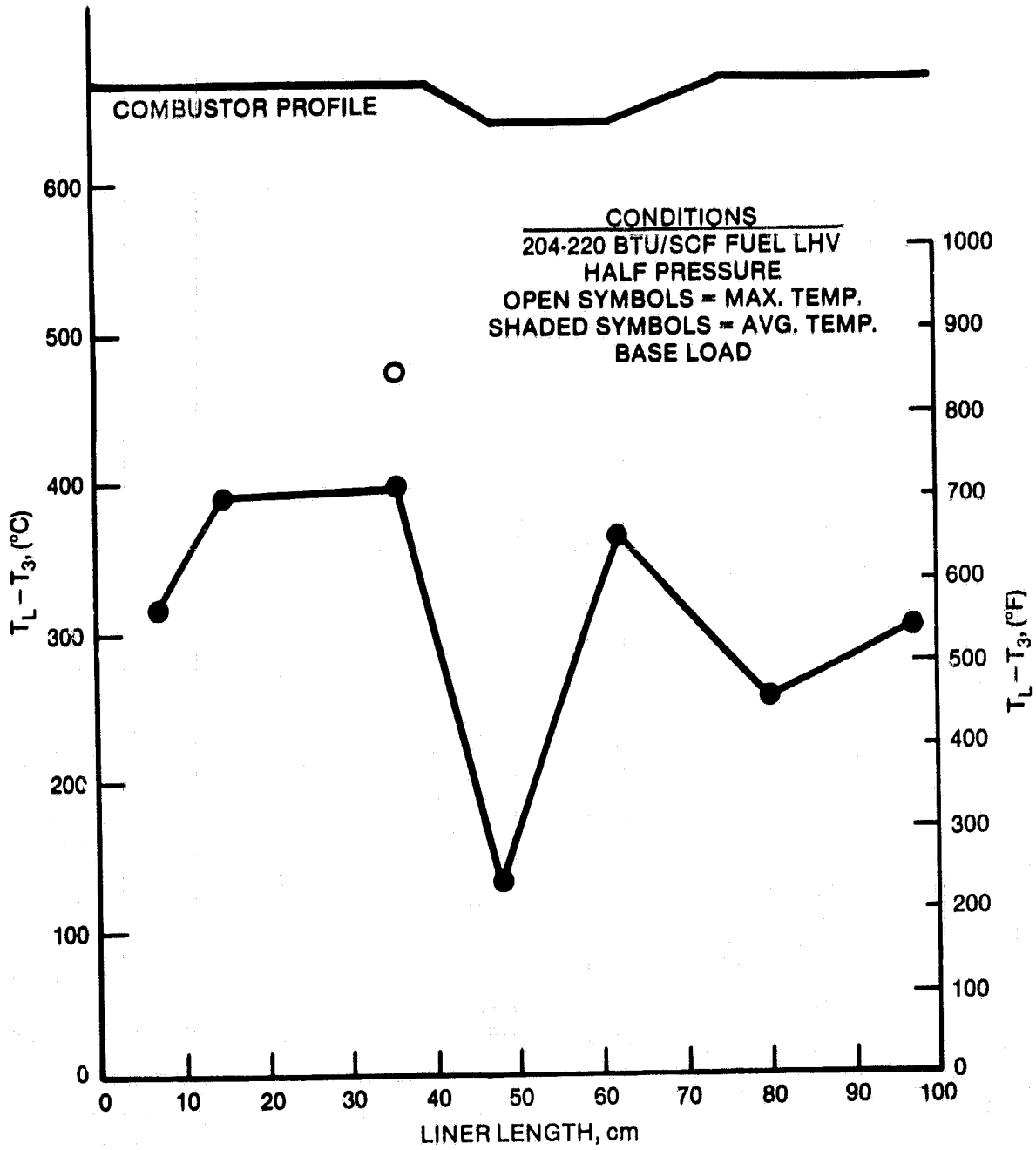

Figure 7-11
LINER METAL TEMPERATURES, CONCEPT 2—GAS FUEL

ORIGINAL PAGE IS
OF POOR QUALITY

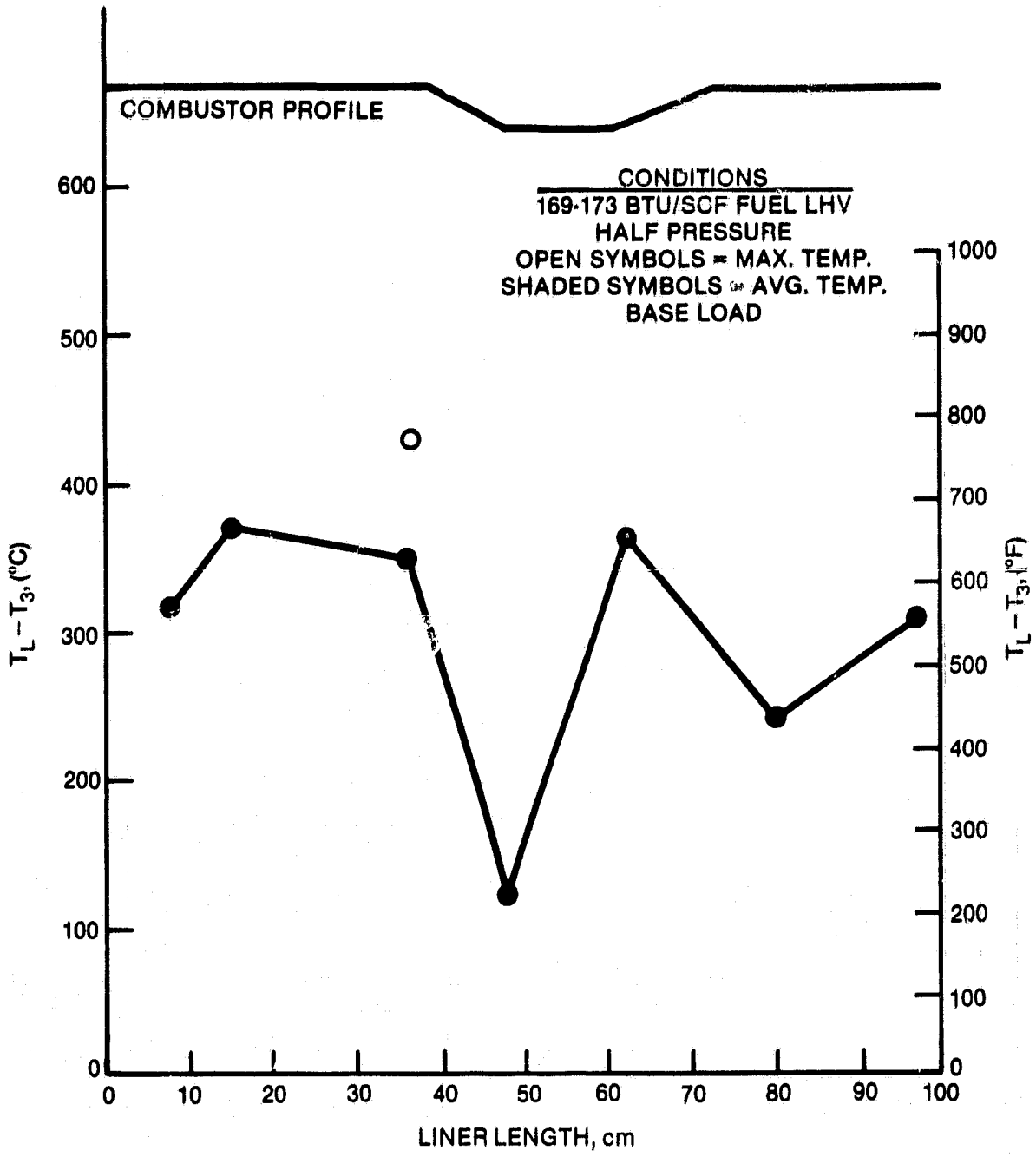

Figure 7-12
LINER METAL TEMPERATURES, CONCEPT 2—GAS FUEL

which was 732°K (859°F) above compressor discharge air temperature. This temperature was recorded by thermocouple number 8 which was located near the exit of the rich stage just upstream of the conical converging section of the quench zone. This temperature is higher than for typical production combustion liners; however, it is well below the 1200°K-1310°K (1700°F-1900°F) liner metal temperatures experienced for Concept 2 with liquid fuels in Phase I tests. Two factors which are expected to decrease the liner metal temperature for the gas fuel tests as compared to liquid fuel tests are (a) reduced radiation due to lower flame luminosity with gas and (b) the use of a boundary layer trip wire to improve rich stage backside convective cooling for the gas fuel design. Failure to thoroughly mix rich stage fuel and air and release all heat possible in the rich stage may also have played a role in keeping rich stage metal temperatures low.

Figure 7-13 presents a plot of combustor airflow function versus percent total pressure drop. At the design point value of the flow function, the pressure drop is 7.6 percent compared with the program goal of 6.0 percent. This pressure drop is somewhat higher than that seen during the Phase I liquid tests. Some increase in flow resistance is attributable to the rich stage backside boundary layer trip wire. It was decided to obtain the desired flow splits with the trip wire installed by increasing the combustor pressure drop rather than by increasing flow areas downstream of the trip wire to reduce flow resistance. This decision was made to minimize the cost and schedule impact of adding the trip wire.

Post test inspection showed the rich-lean combustor to be in good condition, fully adequate for further testing. Figure 7-14 shows that some deterioration of the rich stage liner thermal barrier coating did occur. The

ORIGINAL PAGE IS
OF POOR QUALITY

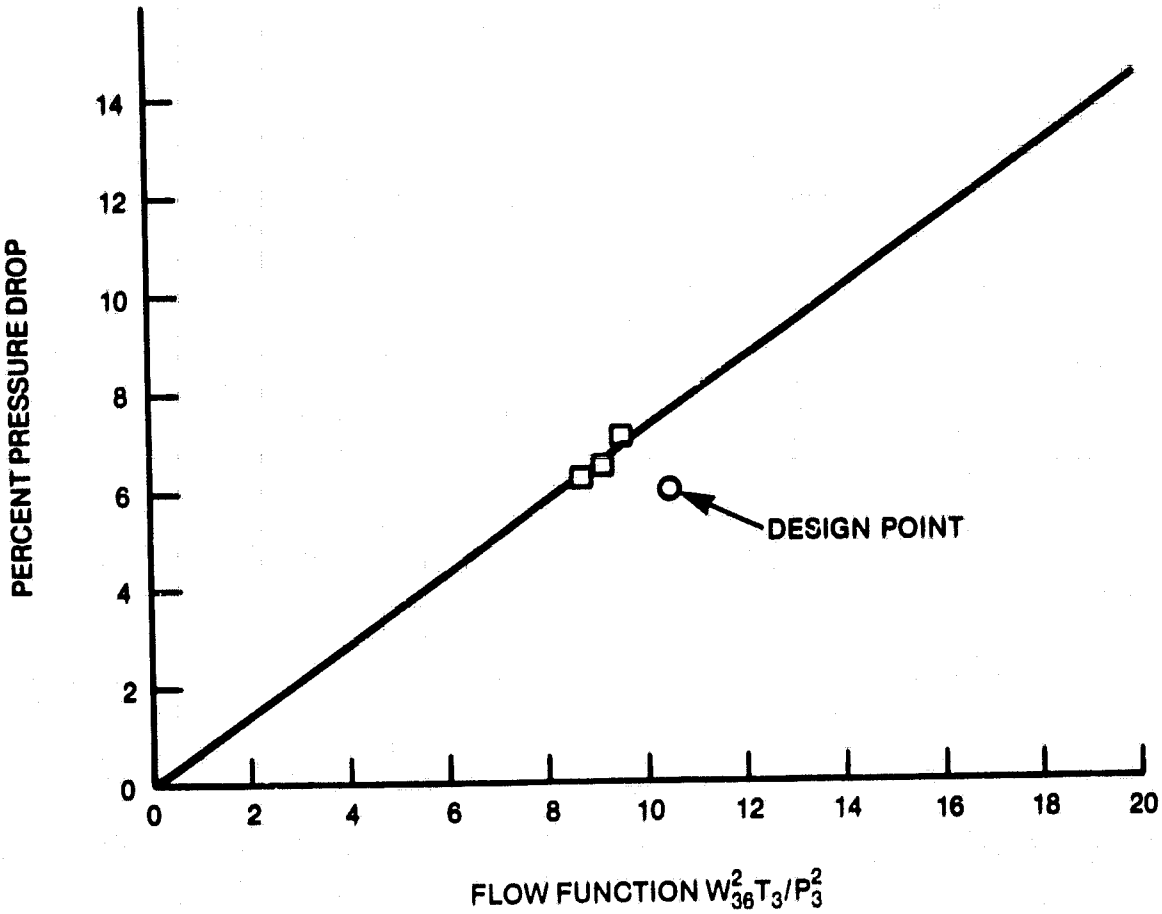

Figure 7-13
PRESSURE DROP VS FLOW, CONCEPT 2

ORIGINAL PAGE
BLACK AND WHITE PHOTOGRAPH

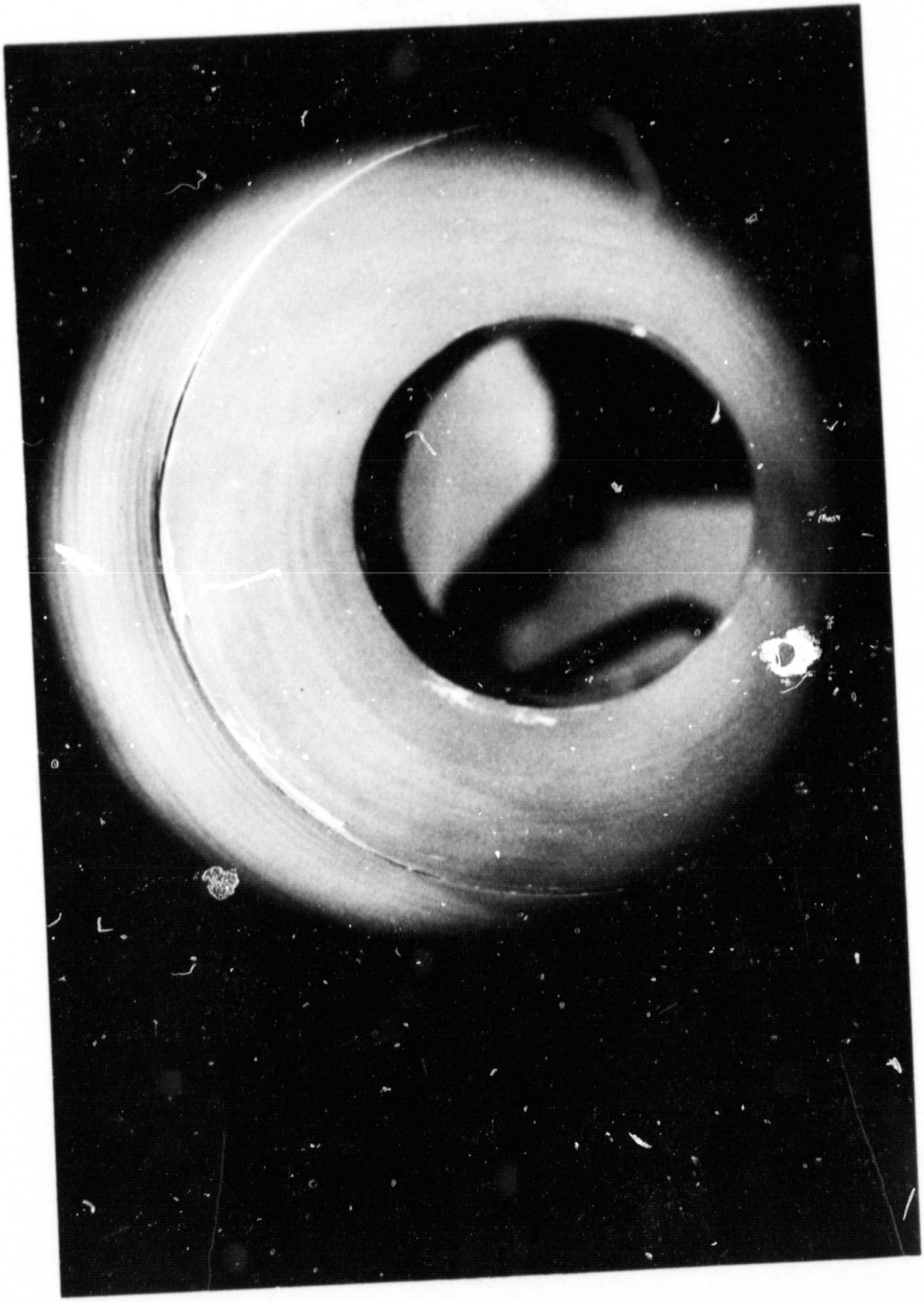

Figure 7-14
POST-TEST CONDITION OF RICH STAGE THERMAL BARRIER COATING
RICH/LEAN COMBUSTOR, CONCEPT 2

thermal barrier top coat, 0.33-0.43 mm thick Yttria Stabilized Zirconia, appears to have eroded in some localized areas where a surface discontinuity exists. (For example at the junction of the rich-stage cylindrical section with the converging conical section). However, the thermal barrier coating was not completely eroded at any location and the affected area was quite small. The only other degradation observed at post test inspection was some local yielding of nichrome strips used to adjust airflow areas to obtain the desired air flow splits. These did not interfere with test performance.

7.2 CATALYTIC COMBUSTOR TEST RESULTS

Tests of catalytic combustor Concept 8 were completed with petroleum distillate fuel. This combustor concept was developed to explore the potential for ultra low NO_x performance with nitrogen-free fuels. The combustor was developed as a parallel staged concept in which the downstream pilot stage (refer to Section 6.3) was designed for ignition, turbine acceleration and operation to part load. Reactor ignition occurs at part-load and power increase is accomplished by increased reactor stage fuel. Under the sponsorship of a major U.S. utility, General Electric has more recently developed the design of a series-staged catalytic combustor. This design avoids the problems of instability in the flow split between reactor and pilot stages which occurred during the Phase IA catalytic combustor tests and which are discussed later in this Section.

A total of approximately two hours of reactor operating time was accumulated at design cycle conditions during the test program. Data were taken at five steady state test points for reactor-only and pilot-only

operation, as well as numerous transient conditions. The first three steady state test points were established with only the reactor stage fueled, while the next two steady state points were taken with only the pilot-stage fueled. Rather than start directly into the test program with both stages operating in the parallel-staged mode of intended operation, first reactor-only and then pilot-only operation were selected for the initial test operations for the following reasons:

(1) to ensure that reactor operations test data would be acquired, i.e. to preclude the possibility that damage to the pilot stage liner from pilot operation would result in failure to acquire reactor operating data since the limited program resources made only one test possible, and

(2) to provide separate emissions signatures for each stage (reactor, pilot stages), necessary to ultimately determine the emissions contribution from each stage to the total emissions signature which would be measured for the combustor with both stages operating in the intended parallel mode.

In fact, as discussed later, pilot stage liner damage did occur during pilot-only operation.

7.2.1 Reactor-Only Operation

Ignition of the reactor stage was accomplished by raising the preheat temperature, i.e. combustor inlet air temperature, to 644°K (700°F) followed by a controlled opening of the fuel valve to the reactor stage nozzles. Table 7-3

Table 7-3
CONCEPT 8 CATALYTIC COMBUSTOR TEST DATA

Test Point Number	Cycle Load Condition	Inlet Temperature (°F)	Inlet Pressure (psia)	Reactor Fuel Flow W_{FUEL-C} (lbs/sec)	Reactor Air Flow W_{AIR-C} (lbs/sec)	Reactor Fuel-Air Ratio $(f/a)_c$	Reactor Equivalence Ratio ϕ_c	Pilot Fuel Flow W_{FUEL-P} (lbs/sec)	Pilot Air Flow W_{AIR-P} (lbs/sec)	Pilot Fuel-Air Ratio $(f/a)_p$	Pilot Equivalence Ratio ϕ_p	Reactor Reference Velocity (FPS)	Overall Pressure Drop $\Delta P/P_3$	Exhaust[1] Temperature (°F)	Reactor Exit Temperature[2] (°F)	CO (ppm)	CO_2 (%)	NO_x Uncorrected[4] (ppmv)	NO_x Corrected (ppmv)	NO_x Corrected @ 15% O_2 (ppmv)	EI NO_x (gms NO_x/kg fuel)	Flow Function	Combustion Efficiency η_c
1	70%	706	145.2	0.094	3.43	0.0274	0.397	—	4.69	—	—	66.5	5.22	1271	1764	86.8	3.91	9.6	9.1	11.5	1.32	3.65	>99%
2	92%	705	148.4	0.109	3.42	0.0319	0.461	—	4.68	—	—	64.9	5.56	1388	2637	4.2	3.74	12.2	11.6	14.2	1.46	3.48	>99%
3	92%	706	165.5	0.106	3.49	0.0304	0.440	—	4.77	—	—	59.4	4.53	1365	2459	1.0	3.71	11.3	10.7	13.2	1.41	2.98	>99%
4	~85%	642	162.2	—	3.32	—	—	0.058	4.55	0.0127	0.1845	54.6	3.01	1073	642[3]	497	2.05	41.5	39.3	93	9.0	2.59	98.5%
5	~100%	642	170.3	—	3.26	—	—	0.090	4.47	0.0201	0.2914	54.0	4.27	1343	642[3]	173	3.51	121.9	115.5	155	17.0	2.27	>99%

(1) Exhaust gas temperature measured at combustor exit plane, reactor and pilot flows mixed
(2) Reactor exit temperature, average of thermocouples embedded in outlet of reactor substrate
(3) Inlet air temperature for pilot-only operation of test points 4, 5
(4) NO_x uncorrected: as measured
NO_x corrected: adjusted to ISO humidity
NO_x corrected to 15% O_2: adjusted for humidity, corrected to 15% O_2

ORIGINAL PAGE IS OF POOR QUALITY

presents the data taken for five test points. Test points 1, 2 and 3 were for reactor-only operation. During these test points, stable air flow, emissions and reactor temperatures were achieved. As Table 7-3 shows, points 2 and 3 are for catalyst fuel-air ratios of approximately 0.031 which corresponds to the 92% (baseload operation) load condition for the MS7001E cycle application of this combustor, while the reactor fuel-air ratio during test point 1 corresponded to the 70% load point. After 1-1/2 hours of reactor operation, the reactor failed due to substrate overtemperature. The first two axial reactor segments (5.08 cm of coarse cell substrate) remained intact so that little change in liner pressure drop and efficiency were immediately apparent. However, the loss of catalyst temperature indication (loss of reactor thermocouple readings), used for test control, caused a termination of the reactor-only portion of the test.

Emissions performance of the reactor stage was excellent. At 92% load conditions, measured emissions indices were 1.4 gms NO_x/kg fuel (see Table 7-3) which corresponds to approximately 10 ppmv NO_x. Figure 7-15 presents measured reactor-only NO_x emissions indices as a function of reactor stage equivalence ratio (plotted vs overall combustor equivalence ratio on Figure 7-17). CO emissions were approximately 1-4 ppm at the 92% baseload condition, and 87 ppm at 70% load. Combustion efficiencies exceeded 99% at all test points. Combustor pressure drop was approximately 5 percent during the reactor-only tests.

Although combustor exhaust temperature (measured at the exit plane with reactor and pilot stage flows mixed) was approximately 1033°K (1400°F), reactor stage exit temperature estimated from reactor bed thermocouple readings was approximately 1672°K (2550°F). Figures 7-19 and 7-20 show the location of

ORIGINAL PAGE IS
OF POOR QUALITY

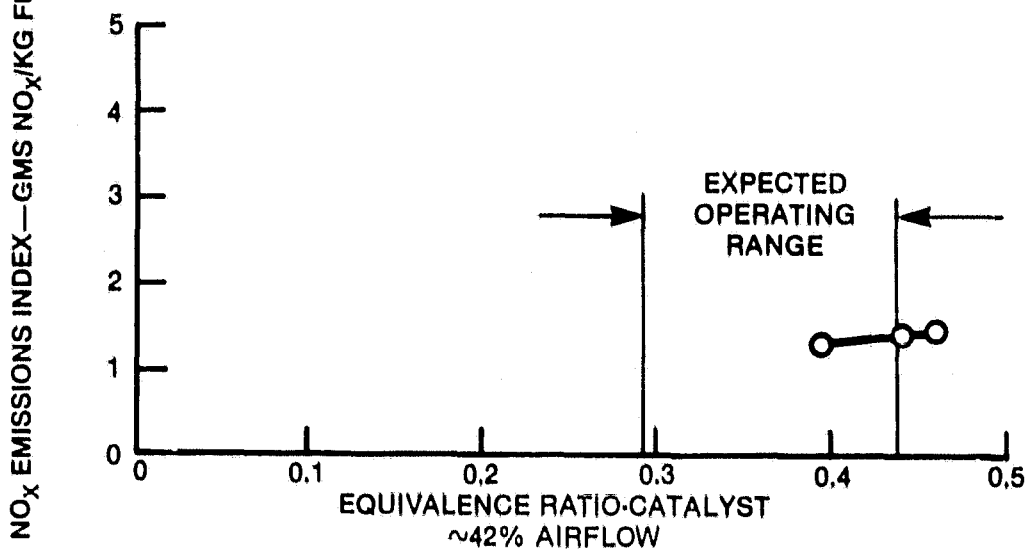

Figure 7-15
REACTOR STAGE NO_x EMISSIONS INDEX

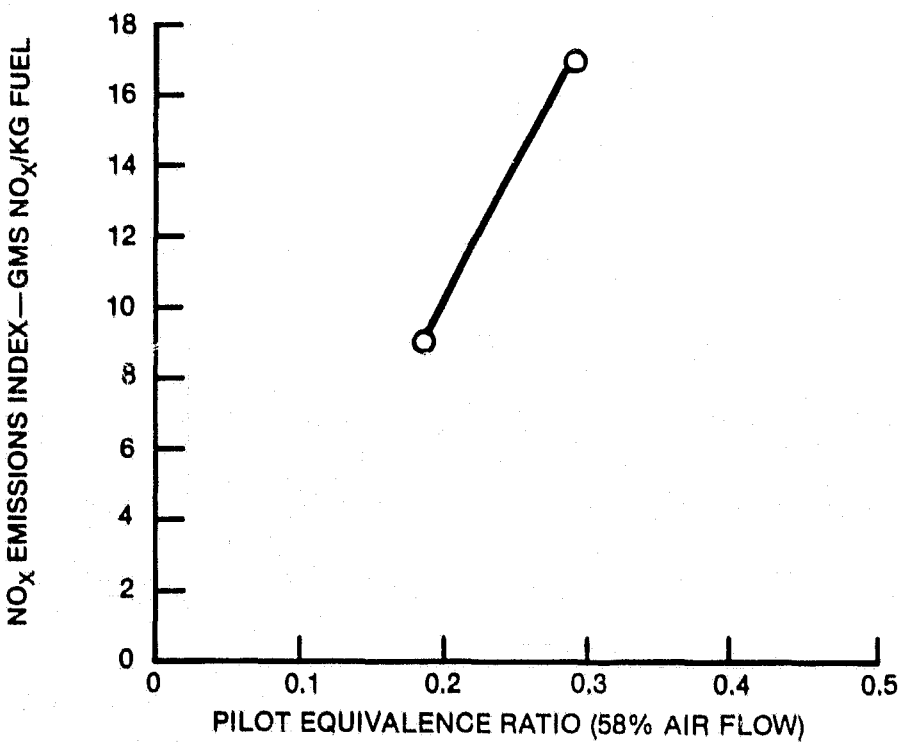

Figure 7-16
PILOT STAGE NO_x EMISSIONS INDEX

ORIGINAL PAGE IS
OF POOR QUALITY

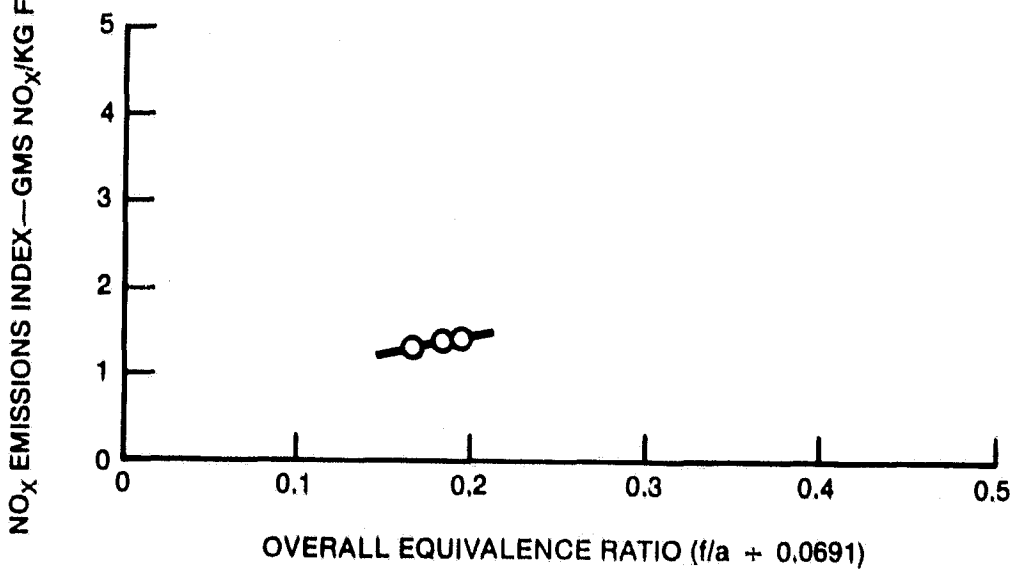

Figure 7-17
REACTOR STAGE NO_X EMISSIONS INDEX

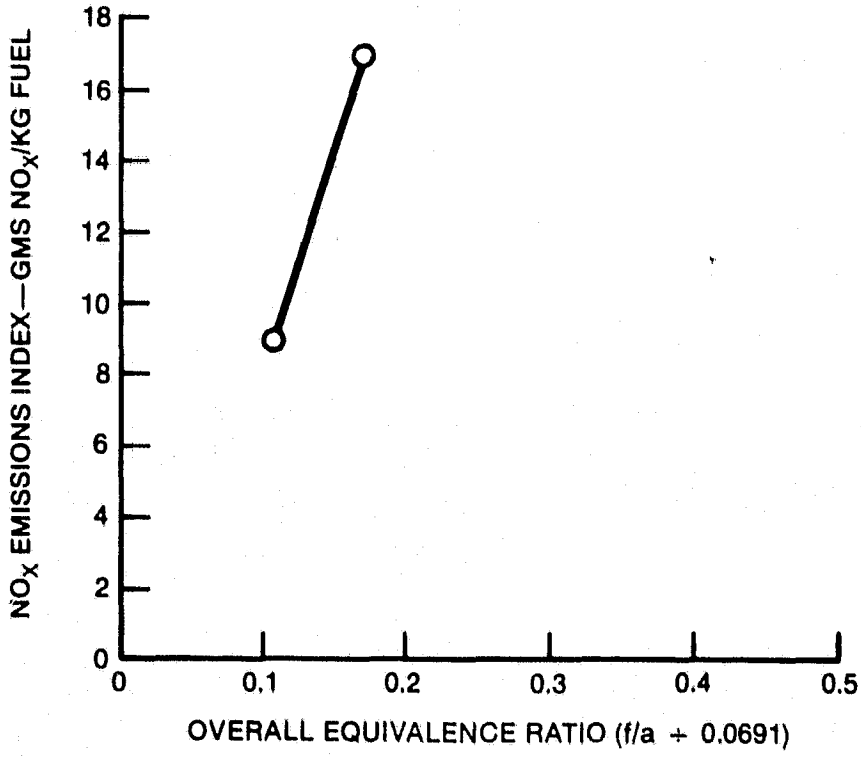

Figure 7-18
PILOT STAGE NO_X EMISSIONS INDEX

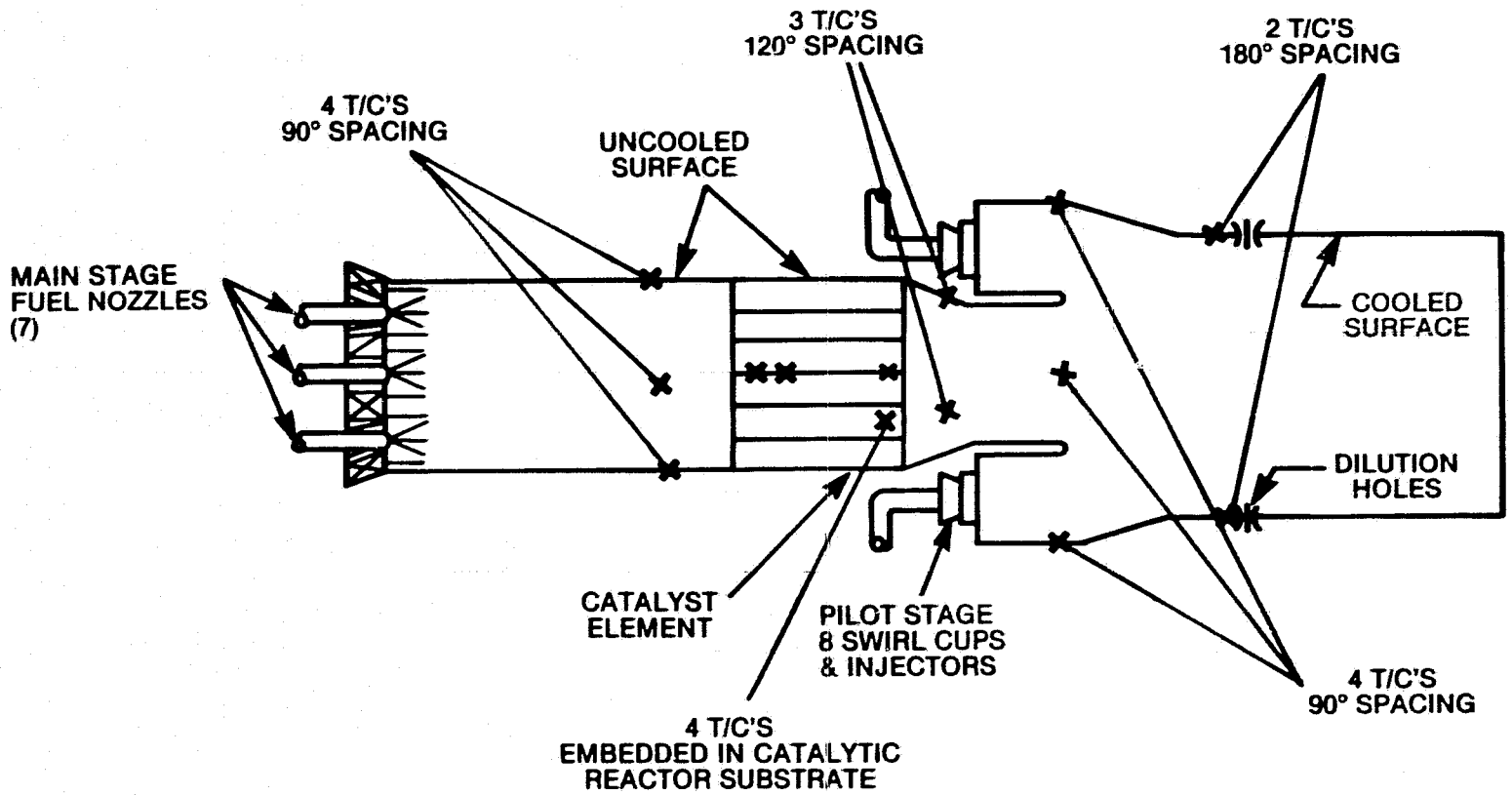

Figure 7-19
CATALYTIC COMBUSTOR SCHEMATIC THERMOCOUPLE LOCATIONS

ORIGINAL PAGE IS
OF POOR QUALITY

ORIGINAL PAGE IS
OF POOR QUALITY

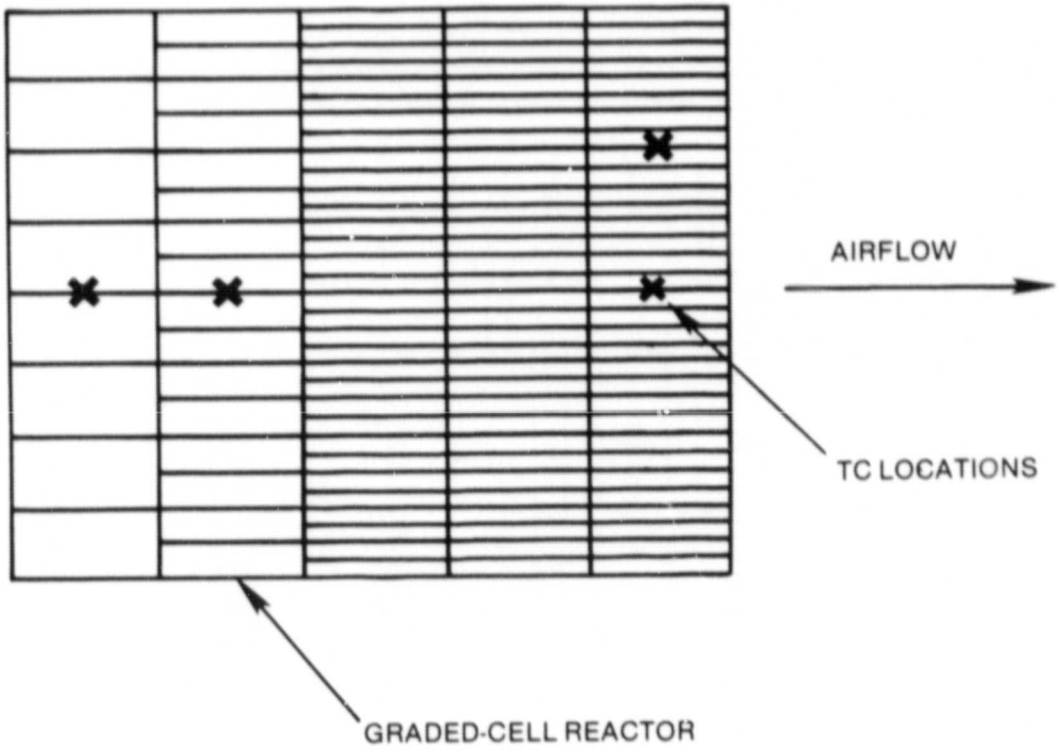

Figure 7-20
CATALYTIC REACTOR THERMOCOUPLE LOCATIONS

thermocouples in the combustor liner and reactor sections. Figure 7-21 presents the measured temperature distribution at the exit plane for reactor-only operation. The exhaust flow shows a hot central core associated with the reactor exit flow, and temperatures approaching inlet air (644°K) at the outer periphery, reflecting the cool pilot air flow. Von Brand smoke numbers for reactor operation were greater than 99, i.e. essentially an SAE smoke number of 0.

7.2.2 Pilot-Only Operation

To check ignition, cooling and emissions performance of the pilot stage, pilot-only operation was initiated after completion of the reactor testing. Test points 4 and 5 of Table 7-3 were completed with the pilot fuel stage fired. Difficulty was encountered in maintaining pilot ignition around the annular pilot stage, in part due to the core flow of relatively cool reactor stage air (644°K). Test point 4 represented the first combination of fuel and air which led to stable temperatures and emissions. Point 5 was completed with fuel flow limited by the high metal temperatures experienced in the dilution zone (1200°K, 1700°F).

NO_x emissions were 93 ppm at approximately 80-85% load (test point 4) and 155 ppm at 100% load (peakload). Figures 7-16 and 7-18 present pilot-only NO_x emissions index data as a function of pilot equivalence ratio and overall combustor equivalence ratio, respectively. The pilot NO_x emissions compare very well with levels measured for conventional lean-burning combustors. MS7001E combustor test data result in emissions indices of approximately 9.6 at an overall equivalence ratio of 0.2, in good agreement with the Phase IA test

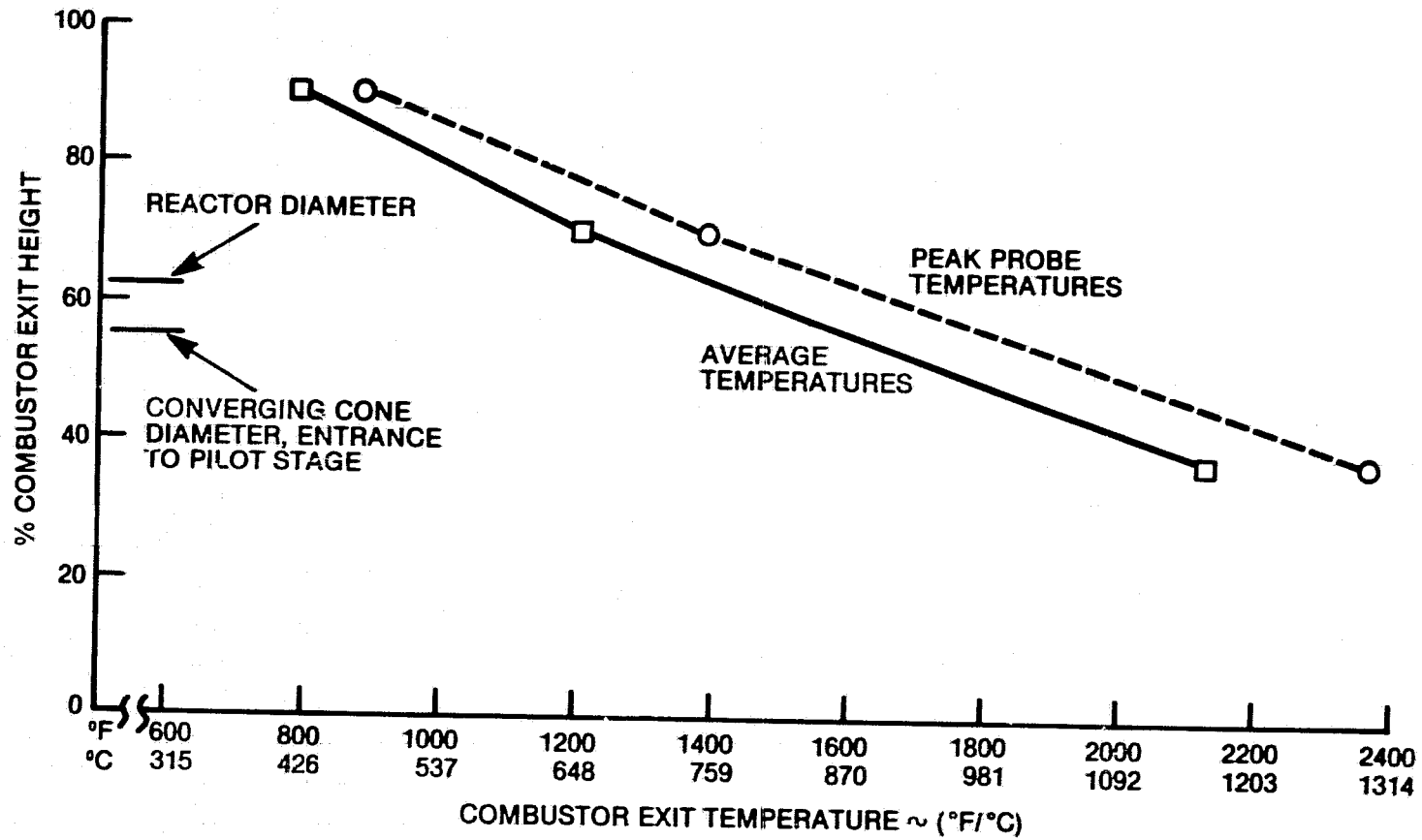

FIGURE 7-21
EXIT TEMPERATURE DISTRIBUTION TEST POINT 3 (92% LOAD)
(REACTOR OPERATION ONLY)

ORIGINAL PAGE IS OF POOR QUALITY

data. CO emissions were relatively high for pilot operation (200-500 ppm), caused in part by the low overall temperature rise which accompanied pilot-only operation (dilution by cool reactor flow), and by relatively unstable operation. Combustion efficiency was 98.5% at 80-85% load and exceeded 99% at 100% load. Exhaust temperature measured at the combustor exit plane was 1001°K (1343°F) at 100% load (test point 5), with pressure drop of 3-4%.

Due to the unstable combustion and high metal temperatures, smoke measurements were not made.

Figure 7-22 presents the radial temperature distribution at the exhaust plane for pilot-only operation. Low central temperatures (at 40% of combustor exit height) reflect the inlet air exiting the reactor.

7.2.3 Projected Combustor Emissions

Test data at test points 3 and 5 for reactor-only and pilot-only operation, respectively, have been combined to predict the NO_x production to be expected for this parallel-staged combustor with both stages operating at the 92% load design point. Assuming NO_x production of the two stages is independent, overall combustor NO_x can be predicted by

$$EI\ NO_x\ (\text{overall}) = EI\ NO_x\ (\text{catalyst}) \times \frac{W_f\ \text{catalyst}}{W_f\ \text{overall}} + EI\ NO_x\ (\text{pilot}) \times \frac{W_f\ \text{pilot}}{W_f\ \text{overall}}$$

At the design point equivalence ratios, the following emissions indices were measured:

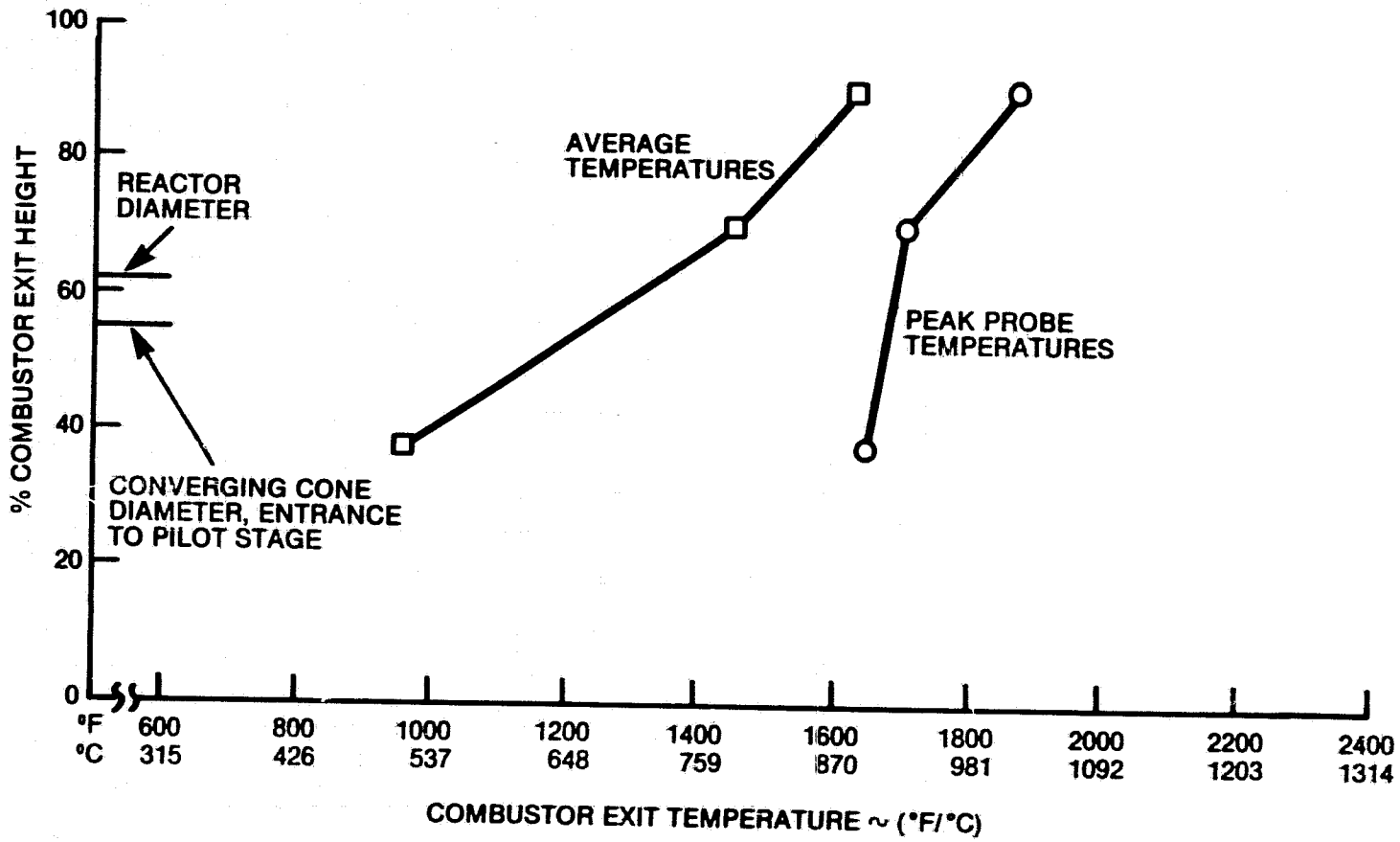

FIGURE 7-22
EXIT TEMPERATURE DISTRIBUTION TEST POINT 5 (~100% LOAD)
(PILOT OPERATION ONLY)

ORIGINAL PAGE IS OF POOR QUALITY

	Ø	EI NO_x
Reactor	0.43	1.4
Pilot	0.2	10

These data lead to a predicted combustor NO_x emissions of 3.4 gms NO_x/kg fuel, substantially lower than the 7.0 gms/kg program goal for low nitrogen content fuel.

7.2.4 Test Observations

Two types of instability occurred during the reactor-only portion of the test. In the parallel flow paths of this design, any increase in pressure drop in the catalyst tends to reduce the catalyst airflow and increase airflow to the pilot stage of the combustor. Although expected to occur to some degree, the magnitude of the effect was much larger than anticipated. As the catalyst exit temperature increases with increased catalytic efficiency, the airflow is reduced which increases the catalyst fuel-air ratio. This relative increase in fuel flow causes the catalyst pressure drop to increase even further until a stable point is reached or the catalyst fails due to overtemperature in the substrate. As a result it was impossib to maintain the catalyst temperature in the range of 1255-1644°K (1800-2500°F). Any slight increase in fuel flow resulted in a catalyst temperature above the recommended limit (1588°K, 2400°F), while any attempt to control the excessive temperature brought the catalyst temperature back down below 1255°K (1800°F). This characteristic of catalyst operation may present a strong obstacle to the development of parallel stage combustors without variable geometry capabilities. As noted early in

this section, GE has developed a series-staged design which avoids this concern.

The catalytic reactor itself also presented an unstable characteristic. During the early portion of this test while attempting to reach a stable catalyst temperature in the range of 1255-1588°K (1800-2400°F), it was observed that the highest temperatures in the reactor would be located in one instance near the reactor exit and in another near the reactor entrance. For example, Figure 7-23 presents the data noted for test points 2 and 3 of Table 7-3 and a transient point, each point nominally at the same reactor fuel-air ratio. Inlet velocities are the same for point 2 and the transient, while point 3 differs only slightly, having a higher inlet pressure. There were occasions noted during other transients between test points where the central thermocouple, #2 in Figure 7-23, was lowest in temperature of the four thermocouples. Possible explanations for the observed transient nature of the axial temperature distribution are:

(1) A non-uniform fuel distribution at the entrance of the reactor causing the combustion reactions to occur at different points and with varying efficiencies and heat releases along the reactor. The difference in temperatures 3 and 4 supports this hypothesis.

(2) Test point 2 and the transient point presumably have the same fuel-air ratio but exhibit different average temperatures and axial distributions. Carbon monoxide at the transient point was about 80 ppm while it was only 42 ppm at test point 2. The difference in the average temperature and the axial reactor temperature distribution (see Figure 7-23) may be attributed

ORIGINAL PAGE IS
OF POOR QUALITY

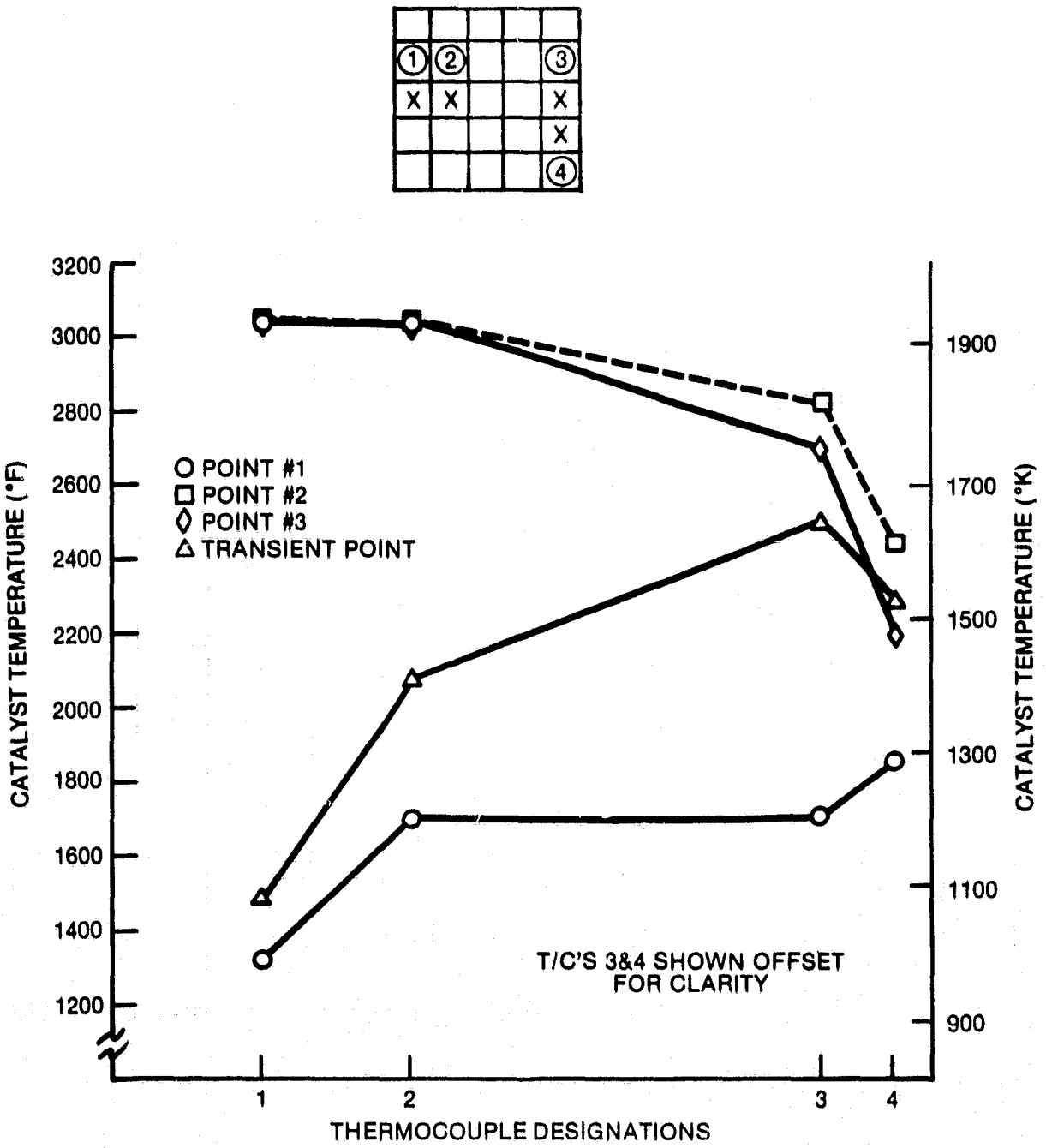

Figure 7-23
CATALYTIC REACTOR TEMPERATURES

to the instability in the air flow split between reactor and pilot stages discussed earlier. However, the earlier presented predictions of overall combustor NO_x (pilot and reactor operating in parallel mode) are expected to be reasonably accurate, since it should be noted that reactor operation can occur in only a narrow fuel-air ratio band. Furthermore, measured NO_x data are relatively flat with fuel-air ratio changes.

(3) A deficiency in the reactor design, i.e. choice and mix of graded cells, for these operating conditions.

Post test examination of the reactor (Figure 7-24) showed damage to the central area of the last three axial reactor segments. There was no evidence of melting, nor deposits or plugging.

In pilot-only operation, ignition was accomplished with some difficulty. Misalignment of fuel nozzles in these cups, plus the increased core airflow through the damaged catalyst made pilot operation unstable. Metal temperatures in the pilot primary zone showed that some portions of the pilot section had flame only intermittently. The difficulties in controlling backside cooling with a flow sleeve with a small gap, and the eventual combustion of fuel which passed beyond the primary zone are the suspected contributors to the liner burnout noted in Figure 7-25.

ORIGINAL PAGE
BLACK AND WHITE PHOTOGRAPH

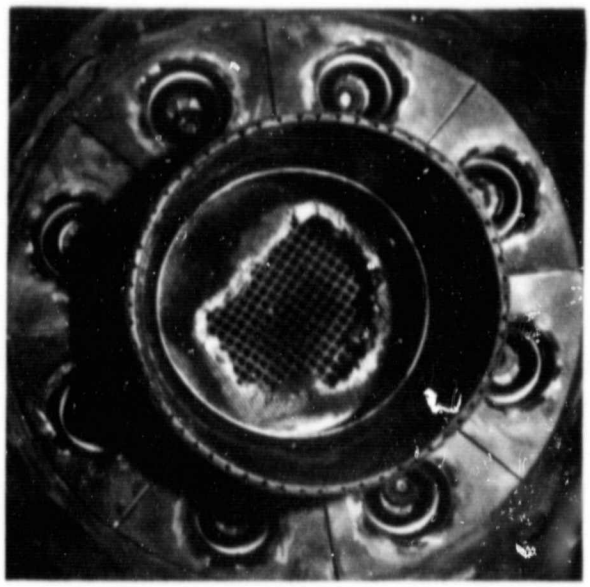

Figure 7-24
POST-TEST VIEW OF REACTOR EXIT

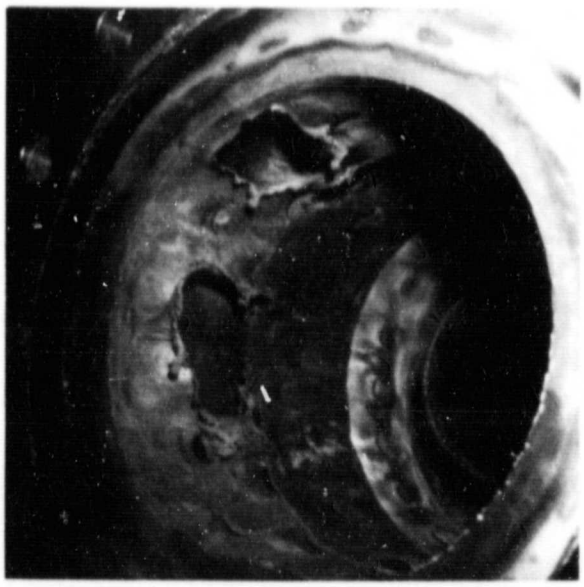

Figure 7-25
POST-TEST VIEW OF PILOT STAGE

REFERENCES

1. Sullivan, D.A. "A Simple Gas Turbine Combustor NO_x Correlation Including the Effect of Vitiated Air", ASME Paper No. 76-GT-5, 1976.

2. Final Report, "Low NO_x Heavy Fuel Combustor Concept Program Phase 1", NASA CR#165449, October 1981.

3. Baumeister, T. and Marks, L.S., Standard Handbook for Mechanical Engineers, McGraw & Hill Co., Seventh Edition, 1958.

4. Fenimore, C.P. "Reactions of Fuel-Nitrogen in Rich Flame Gases", Combustion and Flame 26, 249-256 (1976).

SECTION 8

CONCLUSIONS AND RECOMMENDATIONS

8.1 RICH-LEAN COMBUSTOR, CONCEPT 2

The Concept 2 rich-lean combustor, in the single configuration tested during Phase 1A, was not successful in significantly reducing thermal NO_x emissions for the baseline gas fuel (244 Btu/scf LHV). The reasons for this were discussed in Section 7.1, and may be attributable to the following:

(1) Fuel-air mixing in the rich stage appears to have been inadequate with the result that a fuel-rich central core flow persisted through the rich and quench stages with burning similar to a conventional combustor in the lean stage. This hypothesis is based on the observation that the center fuel nozzle is a low swirl design which concentrates all the fuel in a central jet and does not produce a central recirculation zone. This is further supported by the experimental observations that (a) the liner metal temperatures at the head end of the combustor were relatively low at all test points and (b) the combustor exit temperature profile was significantly peaked toward the center for all test points.

(2) The dwell times in the rich, quench and lean stages may not have been optimized for minimum NO_x production with the baseline gas fuel. Test combustor geometry and airflow splits were established in accordance with Phase I test results for liquid fuel and the rig did not have the flexibility to vary geometry or airflow splits during the test.

Aside from inability to achieve the desired NO_x emissions reduction during the single Phase 1A test, the performance of the rich-lean combustor was generally satisfactory for all gas fuels tested and is summarized below.

Concept 2 Performance Summary

- NO_x Emissions - Aside from the lowest heating value fuel, did not meet program goals because of thermal NO_x production.
- Combustion Efficiency - Satisfactory (99.77-99.99%).
- Smoke - No smoke was observed for all fuels.
- Pattern Factor/Temperature Profile - Met program goals, but indication of rich central core in the rich stage.
- Pressure Drop - 7-8%, approaches the design objective.
- Liner Metal Temperature - Higher than desired for liner durability (1033-1089°K, 1400-1500°F), but significant improvement over Phase I liquid fuel performance.
- Ignition - Satisfactory
- Turndown - Satisfactory
- Post Test Condition - Satisfactory

As noted, the NO_x performance for Concept 2 met program goals with significant margin for the lowest heating value fuel tested (167-171 Btu/scf lower heating value). This is an encouraging result since it shows that thermal NO_x emissions can be controlled by dilution of the fuel with an inert (Nitrogen was used in this case), and suggests that a well-mixed lean-lean combustor would also be successful since flame temperature can be reduced by dilution with air instead of an inert.

Based on the preceding test results and conclusions, the following actions are recommended towards a complete evaluation of the potential of the rich-lean combustor in Phase II:

1. Perform mixing effectiveness tests on the Concept 2 combustor fuel nozzles. If, as suspected, these nozzles do not provide rapid and uniform fuel-air mixing, these fuel nozzles should be replaced with high swirl designs of the type developed for the DOE High Temperature Turbine Technology program. Any new fuel nozzle designs prepared for this program should undergo mixing effectiveness testing prior to use.

2. Obtain baseline NO_x emissions data with a conventional combustor under identical test conditions including ammonia injection so that the effectiveness of NO_x reduction design features can be evaluated directly.

3. Modify the test rig to allow variation in internal airflow splits at constant overall equivalence ratio during the test so that rich, quench, and lean stage equivalence ratios can be optimized for minimum emissions with any test fuel.

4. As a backup to development of the rich-lean concept, continue the development of the lean-lean combustor concept initiated in Phases I and IA of this program since the data collected to date indicate that this concept has the potential to achieve ultra-low NO_x emissions for liquid and gas fuels having no fuel bound nitrogen (FBN).

General Electric recommends that the prime combustor concept for development in Phase II should be the rich-lean combustor. The rich-lean combustor offers the potential for controlling NO_x from organic nitrogen sources, a potential contaminant in coal-derived fuel gases depending on gas cleanup system design and cycle efficiency considerations which can lead to selection of gas resaturation to utilize low level heat. Given the potential cost and complexity of NH_3 removal systems, organic nitrogen should be considered a potential contaminant in fuel gases.

An additional advantage of the rich-lean concept is a potential for growth to high firing temperatures (2600-3000°F) which likely exceeds that of the lean-lean concepts.

8.2 CATALYTIC COMBUSTOR

The catalytic combustor concept has demonstrated the potential for very low NO_x emissions burning distillate fuel. The catalytic reactor can be ignited with ease at the compressor discharge temperatures available in present day industrial gas turbine. Premix section length and the fuel injection method appeared satisfactory although no instrumentation was available to monitor performance of this section.

Parallel staging of the catalyst with a conventional design requires careful control of air flow splits and catalyst pressure drop. Use of variable-geometry devices to control air flow distribution to the reactor and pilot stages are necessary for the parallel-design approach. General Electric has completed the preliminary design of a series-staged combustor which will avoid flow-split instabilities which occurred during the Phase IA catalytic combustor testing.