NASA CR-165,929

NASA Contractor Report 165929

FOR REFERENCE

NOT TO BE TAKEN FROM THIS ROOM

Feasibility of SPF/DB Titanium Sandwich for LFC Wings

NASA-CR-165929
1982 0019338

F. T. McQuilkin

ROCKWELL INTERNATIONAL CORPORATION
LOS ANGELES, CA 90009

CONTRACT NAS1-16236
JUNE 1982

LIBRARY COPY

JUL 28 1982

LANGLEY RESEARCH CENTER
LIBRARY, NASA
HAMPTON, VIRGINIA

National Aeronautics and
Space Administration

Langley Research Center
Hampton, Virginia 23665
AC 804 827-3966

NF01924

Stickle
Library

North American Aircraft Operations
Rockwell International Corporation
P.O. Box 92098
Los Angeles, California 90009

Rockwell International

In reply refer to:
82LA-1242-053

1 July 1982

Subject: Contract NAS1-16236
Titanium Sandwich for LFC Wings
Submittal of Data;

To: National Aeronautics and Space Administration
Langley Research Center
Hampton, Virginia 23665

Attention: Kenneth D. Albert
Contract Administrator, M/S 126

Reference: NASA Langley Letter NAS-16236 (126/JAD) dated May 27, 1982

This letter documents the distribustion of enclosure (1) in compliance with the final copy requirements of Part IV.E of subject contract in accordance with approved distribution list received via the reference.

ROCKWELL INTERNATIONAL CORPORATION
North American Aircraft Operations

for L. J. Peckler
T. E. Degani, Manager
Development Programs
Proposals & Administration

TED:MJ:dsr

Enclosure: (1) Seventy-five (75) copies and one reproducible of final report, "Feasibility of SPF/DB Titanium Sandwich for LFC Wings

cc: AFPRO/ACO
w/o enclosure

FOREWORD

This document is the final report for the Feasibility of SPF/DB Titanium Sandwich for LFC Wings Program conducted by the North American Aircraft Operations (NAAO) of Rockwell International for NASA Langley Research Center under contract NAS1-16236. The NASA technical representative for the program was Mr. Daniel B. Snow, with Mr. James W. Cheely serving as alternate technical representative. Key Rockwell personnel who participated in the program are:

- V.E. Wilson - Program Manager, Phase I
- F.T. McQuilkin - Program Manager, Phase II
- L. Israeli - Stress Analysis
- V. Darby - Fabrication
- E. Crilly - Adhesive Evaluation
- W. Zinsley - Adhesive Applications

The program was initiated August 1980 and completed June 1982.

TABLE OF CONTENTS

Contents	Page
SUMMARY	1
INTRODUCTION	2
Background	2
Objectives	3
Smoothness Criteria	3
Scope	3
PROGRAM ACCOMPLISHMENTS	5
Design Development	5
Fabrication Development	7
LFC Strip Installation	12
EVALUATION OF RESULTS	15
SPF/DB Panel Fabrication	15
LFC Strip Installation	15
RECOMMENDATIONS	16
Smoothness	16
Scale-Up	16
LFC Strip Fabrication and Installation	16
Military Applications	17
APPENDIX	18
REFERENCES	20

LIST OF ILLUSTRATIONS

Figure	Title	Page
A-1	LFC application to advanced variable-sweep bomber aircraft	19
1	Panel 1 with tooling	21
2	Panel waviness comparison	22
3	Surface quality with LFC strips installed	23
4	LFC wing section	24
5	LFC wing surface slots	25
6	LFC internal plenums	26
7	Typical LFC truss core panel	27
8	Surface waviness criteria for LFC surface	28
9	Typical surface roughness, step height, and gap width criteria for an LFC wing	29
10	General arrangement, LFC-200-R	30
11	Total wing weight distribution	31
12	SPF/DB demonstration panel in tooling	32
13	Detail of truss core panel and tooling	33
14	LFC panel X-ray	34
15	Surface flatness inspection results	35
16	Section cut through panel upper surface (panel 1)	36
17	Surface flatness inspection results (panel 2 after forming)	37
18	Section cut through panel upper surface (panel 2 - after forming)	38
19	Section cut through panel upper surface (panel 2 - after forming)	39
20	Surface flatness inspection results (panel 2 after chem-milling)	40
21	Section cut through panel upper surface (j. through n.) (panel 2 - after chem-milling)	41
22	Section cut through panel upper surface	42
23	Flat SPF/DB sandwich panel (panel 2 - after final machining)	43
24	Surface flatness inspection results (panel 2 after final machining)	44
25	Revised SPF tooling system (reprocessing LFC panel 1)	45
26	Surface flatness inspection results (panel 1 after reprocessing)	46
27	Section cut through panel upper surface (panel 1 - after reprocessing)	47

LIST OF ILLUSTRATIONS

Figure	Title	Page
28	Fabrication procedure for LFC panel 3	48
29	LFC panel 4 surface flatness inspection results	49
30	Sections through panel 4 upper surface - as formed	50
31	LFC panel 4 (after 0.005 removal by CM)	51
32	Subscale adhesive bonding sample	52
33	Panel with LFC strips installed	53
34	Detail of LFC strip installation	54
35	Dimensional steps between LFC strip and panel surface	55

LIST OF TABLES

Table	Title	Page
I	LFC Wingloads	56

1.0 SUMMARY

This program, conducted by the North American Aircraft Operations of Rockwell International for NASA Langley Research Center, has demonstrated the feasibility of fabricating SPF/DB titanium structures of sufficient smoothness to be used for laminar flow wing surfaces.

Two methods of fabricating panels which meet the surface smoothness criteria have been demonstrated. The first consists of superplastically forming/diffusion-bonding a panel using steel dies (as shown in figure 1) then machining the surface to the required flatness and finish after forming. This approach, however, has been estimated to be more costly than the second approach, in which the panel is formed against ceramic platens which produce the desired surface smoothness without subsequent finishing. Four panels were fabricated, and their surface quality was evaluated. Figure 2 shows the NASA-specified criteria for waviness compared with actual measured values on the panels.

The acceptable surface quality as well as feasibility of the Rockwell-developed laminar flow control (LFC) surface design, in which separate strips incorporating the boundary layer bleed provisions are bonded into slots on the surface, has also been demonstrated. Figure 3, which shows the actual cross section of the panel and strip installation, compares the maximum measured mold line steps with the specific criteria.

Recommendations for future work are presented, including continued study on smoothness in the areas of joints and splices, scale-up to larger wing panels, fabrication of separate LFC strips, and the application of the technology to military aircraft where significant reductions in fuel consumption can be realized.

2.0 INTRODUCTION

2.1 Background

As a result of ongoing studies funded by NASA on laminar flow control (LFC), the advantages of superplastic-formed/diffusion-bonded (SPF/DB) titanium structure for this application are becoming increasingly attractive for LFC wing surfaces. SPF/DB titanium offers better corrosion resistance, better erosion resistance, and greater structural efficiency than aluminum wings. The feasibility of combining LFC provisions into an SPF/DB wing panel has been demonstrated by an earlier NASA program (ref. 1) which produced a 1- by 4-foot wing section, shown in figure 4. Experience gained in the development of this panel indicated that additional development was required in two areas:

(1) The mold line surface of the panel - To meet current requirements for surface smoothness and waviness limitations, greater control must be exercised in fabrication of the wing panel.

(2) The installation of LFC provisions in the panel surface - The demonstration panel incorporated mold line slots (figure 5) as well as internal plenums (figure 6) into the surface as an integral part of the basic panel. If the plenums were not formed properly during the SPF/DB process, or the surface or slots were damaged during the slot machining process, or if the slots were damaged during service, major repair or wing scrappage could result.

Since fabrication of this LFC demonstrator panel in 1978, continuous progress in the SPF/DB process has been demonstrated. Improvements in tooling dies, SPF/DB process cycles, and final chem-milling surface preparation have contributed to the ability of the process to produce panels with better surface quality than the LFC demonstration part.

Progress also has been made to alleviate the second area of concern on the panel, the integral LFC provisions. NASA has funded a study program (ref. 2), which has developed designs of replaceable slots and plenums on an SPF/DB panel. Results of this study indicated that several practical methods of installing a slot/plenum strip appear feasible. Figure 7 is typical of these concepts.

2.2 Objectives

The objectives of this program were to demonstrate the capability of SPF/DB sandwich structure to meet LFC surface quality requirements, to incorporate provisions for separate LFC slot/plenum strips in the surface, and to establish the feasibility of an adhesive system for securing the LFC strip into the mold line recess in the surface.

2.3 Smoothness Criteria

The surface quality of the mold line surface of the LFC panels is of primary importance on this application. The surface waviness of the completed demonstration panels must meet the criteria specified in figure 8. Surface roughness, steps, and gaps must not exceed the values shown in figure 9. These requirements, specified by NASA, are based on data reported in ref. 3. However, the limits specified for a downstep in figure 9 can be doubled, with boundary layer suction according to ref. 4.

2.4 Scope

To meet the objectives of this program, it was conducted in two phases. In phase I, two panels were fabricated for delivery to NASA. The first deliverable panel was a flat SPF/DB sandwich panel with an uninterrupted mold line surface. This was used to demonstrate the mold line surface quality which can be produced by the process. A second deliverable panel, which incorporated recesses for the installation of LFC strips (slot and plenum units), was provided to demonstrate compatibility of the process with LFC provisions. After the satisfactory demonstration of the ability to meet the requirements on surface quality, approval was given by the Contracting Officer to begin work on phase II, in which an adhesive system was to be developed for the LFC insert attachment. This development would require experimentation with various combinations of foams and adhesives, and would lead to a final demonstration of the selected system on the second panel. However, during phase I, the development of a satisfactory method of producing a panel which meets the specific smoothness requirements of paragraph 2.3 without subsequent machining necessitated fabrication of a third panel. To accomplish this within the contracted resources, the phase II development effort was limited to a single adhesive system which was used to bond the simulated LFC strips into slots on the third panel.

This report documents the accomplishments of the program, beginning with the design concept selection, followed by the development of the fabrication process which can produce a panel which meets the smoothness criteria. The selection of an adhesive system and the subsequent installation of the LFC strips are described. An evaluation of the results of these accomplishments is presented, with recommendations for future work concluding the report.

3.0 PROGRAM ACCOMPLISHMENTS

The program consisted of two phases, each of which was segregated into three tasks. The first phase, Panel Fabrication, consisted of design development, fabrication, and inspection tasks. The second phase, adhesive development, was divided into adhesive selection, subscale trial, and installation tasks. These tasks are described in detail in this section.

3.1 Design Development

The concepts reported in NASA contractor reports CR-158979 (ref. 1) and CR-159220 (ref. 2) were used as a basis for the design developed in this task. These concepts were tailored to the LFC 200R aircraft (figure 10), which was originally developed by Lockheed and reported in reference 5. This aircraft is a 200-passenger transport, with a range of 10,200km (5,500 nautical miles), which is designed to fly mach 0.8 at 11,600 meters (38,000 feet). It is a low-wing, T-tail aircraft powered by four, aft-fuselage-mounted jet engines.

The LFC 200R has suction surface requirements for the upper and lower wing surfaces, which extend from 4- to 74-percent chord. The LFC suction requirements are met by two bleed-burn suction pump units which are installed in the wing root fairings. The LFC airflow is ducted from each wing into these pump units. Crossover ducting is provided so that reduced, but symmetrical, LFC suction is possible even with failure of one pump unit.

The vertical shear and bending loads used for the design of the wing are shown in table I. These loads were used to conduct a comparison analysis of the weights of several wing concepts using Rockwell's SWEEP program.

SWEEP is an aircraft structural weight estimating computer program. The basis for the structural sizing and weight analysis in SWEEP is an approximation of the procedures and methods used in structural analysis and design processes used in early preliminary design.

SWEEP performs preliminary sizing of composite and metal lifting surfaces and fuselage structure using a beam theory approach. Major structural elements are sized to strength, stiffness, local crippling, column stability, and general stability criteria, as well as to fit within physical geometric constraints based on manufacturing process limitations, handling, volume, or other considerations. The structure is optimized with respect to weight.

SWEEP was used to investigate a number of wing structural arrangments, including a multirib-supported skin panel that utilized integral hat section stiffeners, and a multispar-supported, truss core sandwich skin panel.

SWEEP also investigated a series of cover panels for the multirib and multispar structural arrangements. For the multirib design, it searched to find the skin gage, the stiffener size and spacing, as well as the rib sizing and spacing that resulted in the lightest weight structure that will meet the strength requirements. In the case of multispar design, it searched to establish face sheet and core gages for the truss core, sandwich, skin panel, as well as the sizing and spacing of the intermediate spars that make up the lightest weight, most efficient wing structure. The weight summaries of the SWEEP data for the multispar and multirib structural arrangements are compared in figure 11. The difference in total weight is approximately 2.5 percent, with the multirib design being the lighter of the two. However, for this program, the SPF/DB titanium truss core sandwich concept was selected for the fabrication specimen. Two factors were primarily responsible for this selection:

(1) The concept is among the lowest weight of the designs investigated in reference 2 and shown in figure 11.

(2) The tooling required to produce a representative panel was readily available.

The panel was designed using the loads from table I at the section subjected to the maximum bending moment which occurs at BP 3.99 meters (157 inches). This moment is 8.7-million newton-meters (77-million inch-pounds), producing an ultimate unit compression load (N_x) of 4,240,000 newtons per meter (24,200 pounds per inch) on the upper cover.

The detail drawing (figure 12) shows the demonstration panel. Four panels were made from this drawing. The grooves, which accommodate the LFC strips, were cut in only the last panel. The edge view on the drawing shows the truss core configuration of the panel. The plan view of the panel shows the area where the core is diffusion bonded (DB) to the face sheet, the core vent holes, and provisions for the SPF-forming pressure needle. Also shown are the grooves which are provided in the last panel for replaceable slotted or perforated LFC strips. In figure 13, the detail cross section of the panel shows the outer face sheet to be 5.08 mm (0.20 in.) and the inner face to be 2.41 mm (0.095 in.). The core is 0.81 mm (0.032 in.) thick with the corrugations

formed to a 55-degree angle. The grooves are 26.9 mm (1.06 in.) wide and 2.34 mm (0.092 in.) deep, allowing for a normal clearance from the LFC strip of 0.76 mm (0.03 in.) on the sides and 0.72 mm (0.028 in.) on the bottom. Detail designs of inserts, however, were not considered a part of this task. Plain strips without slots or perforations were used as inserts in lieu of the designed LFC strips.

A stress analysis of the panel was made using the ultimate compression load (N_x) of 4,240 kn/m (24,200 lb/in.). A sine wave truss core web configuration was used in this analysis to check sizing, but for tooling simplicity, a straight truss core sandwich was fabricated. The truss core buckling stress was calculated, and the sine wave truss core thickness of 0.635 mm (0.025 in.) was found to be satisfactory. Using a sine wave core, the entire N_x load was considered to be applied to the face sheets only. The outer face sheet buckling stress was calculated using the 1.83 mm (0.072 in.) thickness under the LFC recesses. The inner face sheet thickness of 2.41mm (0.095 in.) was used. Both face sheets have a 9-percent positive margin of safety.

3.2 Fabrication Development

Four development panels were required to produce a panel which met all criteria specified for this program. The first two panels, although meeting the surface roughness requirements, did not quite meet the waviness criteria without subsequent machining. The third panel did not form properly because of internal leakage during forming, but the fourth and final panel met all specifications.

The first panel was fabricated from 6Al-4V Ti alloy with the flat (outer mold line) face sheet 5.08 mm (0.200 in.) in thickness (accomplished by diffusion bonding two 2.54 mm (0.100 gage) sheets together), a 1.27 mm (0.050 in.) thick core, and a 2.54 mm (0.100 in.) thickness formed (inner) face sheet. The configuration of the panel was as shown in figure 12.

The panel was fabricated on existing tooling. The tool base was ground flat and parallel on both surfaces prior to laying up the pack. The resurfaced flat tool base was placed on the lower platen of the press. A 7.62 mm (0.330 in.) thick steel kiss bar frame (a spacer which controls the deformation of the pack at the edges for sealing) was placed around the periphery of the pack, and the cavity tool was placed on top of the pack. After heatup to 899° C (1650° F) with a press load of 5059.9 x 10^3 Pa (850 psig), argon at 2,068 x 10^3 Pa (300 psi) was introduced into the upper tool cavity for 2 hours to diffusion bond the pack. The press load was reduced to 500 psig, and a vacuum was then introduced into the tool cavity to assist breakthrough. Breakthrough occurred when 103.4 x 10^3 Pa (15 psi) of argon was valved into the internal core of the pack. The forming cycle took 1 hour and 10 minutes, and then the internal pressure of argon was increased to 2068.2 x 10^3 Pa (300 psi) and held for 4

hours. Power was then turned off, and the part was allowed to cool to 788° C (1,450° F) before depressurizing at 206.8 x 10^3 Pa (30 psi) per minute. After depressurizing, 3.17 mm (0.125 in.) steel shims were placed on top of the kiss bars to keep the upper tool cavity clear of the formed panel. The part was allowed to cool overnight in the press. Upon visual examination of the panel after it had cooled, the 5.08 mm (0.200 in.) thick face sheet displayed a slight concavity condition.

Three inspections were performed: an X-ray inspection, a profilometer inspection, and a dial indicator inspection of the flat surface. The X-ray inspection showed that the internal truss core was sound and fully formed. Figure 14 is a print of one corner of the X-ray film and is typical of the entire film. The narrow bands are the truss core nodes.

A profilometer was used to determine the surface finish of the upper (mold line) surface. The surface roughness was determined to be 0.0016 mm (65 microinches) in the smoothest area, and 0.0022 mm (85 microinches) in the roughest area. This surface is much smoother than the 0.1 mm (300 microinches) maximum limit shown in figure 9.

A dial indicator inspection was performed to determine the flatness of the upper surface of the panel. The panel was set up and leveled by using four corner points as zero. The points determine a square 571 mm (22-1/2 in.) on each side. An inspection grid was then laid out with 127 mm (5 in.) spacing between points. (See figure 15.)

One 127 mm (5 in.) square was further divided into a grid with 25.4 mm (1 in.) spacing between points. The corners of this 127 mm (5 in.) square were set up and leveled. Readings were then taken relative to this new plane. Figure 16 shows that the curve drawn through the 25.4 mm (1 in.) grid points falls within inspection tolerance on the curve drawn through the 127 mm (5 in.) grid points, indicating multiple waves were not present.

This inspection showed that the upper surface of the panel is "dished," with the center of the panel lower than the edges. The maximum depth is 1.27 mm (0.050 in.) below the base plane, and the wave rises and is tangent to the plane at the edges of the panel. The 5571 mm (22-1/2 in.) dimension is the wave length (λ). Considering this as a single wave, the allowable amplitude can be tripled as shown in figure 8. Therefore, the allowable is 1.105 mm (0.0435 in.), which is only 0.165 mm (0.0065 in.) less than the panel 1.27 mm (0.050 in.) depth wave measured on the panel. Since the panel did not quite meet the flatness criteria, the tool base was measured and was found to be crowned by 1.04 mm (0.041 in.). It was believed that the differential cooling of the tool base caused the base to crown in the center, which, in turn, influenced the concavity condition of the panel face sheet which rested

against the base while cooling. Therefore, it was concluded that by removing the next panel hot and slowly cooling it, the dish caused by warpage of the cooling tool could be minimized and the flatness criteria met.

3.2.1 Second panel - A second panel was fabricated using the following procedure. The flat tool base was again ground parallel and flat on both sides. The pack was laid up identically to the first pack. The bonding and forming cycles were the same as the first panel; however, when the power had been turned off and the part cooled to 788° C (1,450° F) and depressurized, the part was immediately removed and placed flat surface down and wrapped in a Kaowool blanket on a flat table. It was allowed to cool overnight. A preliminary check after it had cooled showed a marked improvement over the first panel.

Inspection showed that the maximum deviation from the plane of the corners was 0.71 mm (0.028 in.). Figure 17 shows the inspection grid with deviation from the plane recorded. Figure 18 is section B-B with a cut diagonally through the panel. Figure 19 is a portion of section B-B showing the area where inspection was made on the 1-inch grid.

The second panel was then chem-milled to remove the alpha-case layer, and reinspected. Figure 20 shows the inspection grid which was the same pattern as figure 7. The maximum deviation from the plane was 0.91 mm (0.036 in.) depth of concavity. Figure 21 is section D-D on a diagonal cut through the panel. The figure shows that the panel is a smooth curve without the reverse which is shown in figure 18. However, the panel is concaved 0.203 mm (0.008 in.) deeper than before chem-milling. Figure 22 is a portion of section D-D, similar to figure 19. The inspection at 25.4 mm (1 in.) spacing shows that the curve drawn through these points falls within inspection tolerance on the curve drawn through the 127 mm (5 in.) grid points.

The deviation of this second panel after chem-milling is a single wave which met the flatness criteria for single waves, shown in figure 8. However, the panel did not meet the multiple-wave criterion suggested by NASA letter 249A, dated 9 February 1981, which only allowed 0.305 mm (0.012 in.) maximum.

In order to meet the flatness requirements for multiple-wave panels, the second panel was machined to remove the concavity. Figure 23 shows the panel after machining with the inspection grid marks on it.

Inspection showed that the panel met the flatness requirements by having a maximum deviation of 0.292 mm (0.0115 in.) from the inspection plane for the highest and lowest readings. Figure 24 is a record of these deviations. The surface roughness was determined to be between 0.0025 and 0.0152 mm (10 and 60 rms). The panel was shipped to NASA in March 1981 for evaluation.

3.2.2 "Hot-flattening" first panel - It was agreed by NASA that Rockwell should attempt to "hot flatten" the first panel using a method that would involve placing the panel upon steel glide sheets resting against the ceramic heating platens. A mild steel picture frame would be placed upon the panel flanges to restrain the panel edge members and to react the press loads. After reaching 1650° F (±50° F), the panel would be reinflated through reinstalled inflation tubes through to the core cavity. After the inflation cycle, some internal pressure would be left in the panel, and the panel would be cooled with a press load to react the internal pressure.

Panel 1 was measured, and a picture frame steel tool was fabricated to match the panel edge (figure 25). The frame was placed around the edge of the panel, and both panel and frame were inserted into the press between the steel glide sheets. The panel was pressurized during processing and expanded to force the concave face sheet against the ceramic platen. Some pressure was maintained during cooldown in the press in order to keep contact between the panel and the platen to eliminate warping.

The reprocessed panel was inspected and found to be nearly as flat as panel 2 after final machining. The maximum deviation from the inspection plane was 0.330 mm (0.013 in.), and this was on the edge (figure 26). In the center area of the panel, the maximum deviation was 0.229 mm (0.009 in.). However, the panel still did not meet the NASA criterion for flatness. The waves on this panel now had a shorter wavelength, resulting in a lower wave height limit. Measured along line B-B in figure 27, the wavelength is 307.3 mm (12.1 in.) and the wave height is 0.370 mm (0.0146 in.), as shown in the figure. The NASA wave height limit for this wavelength is 0.236 mm (0.0093 in.).

The potential capability of this process to produce a flat panel to NASA requirements was demonstrated even though the reprocessed panel would not meet the requirements.

3.2.3 Third panel - It was concluded that continued use of steel tooling would never produce a panel with sufficient flatness to meet the LFC wave criteria. Therefore, a third panel should be undertaken using the flat ceramic surfaces to form against.

The method to be used would be a two-stage process. The first stage would be a pack bonding stage that could be accomplished in conventional tooling, while the second, or inflation stage would use a new lower platen and a new mild steel picture frame, as shown in figure 28.

The third panel was diffusion bonded and, after cooling the bonded pack was placed under the picture frame tool and sandwiched between the ceramic platens on the press. The pack was heated to 899° C (1,650° F), and internal argon pressure was applied to the inside of the pack to expand the sandwich panel. Due to leakage problems around the argon gas inlet tubes, only 1034×10^3 Pa (150 psi) pressure could be used, rather than the planned 2068×10^3 Pa (300 psi). The resulting panel was very flat; however, the truss nodes were not fully formed against the glide sheet (platen) due to the lack of sufficient pressure. The waves were visually determined to be greater than those allowed by the NASA flatness requirements.

3.2.4 Fourth panel - The fourth LFC panel was fabricated using the same two-stage process that was followed in the third panel. During the diffusion bonding, or first, stage, greater press pressure was exerted, resulting in a satisfactory seal for the gas inlet tubes. The second stage, or expansion in the picture frame/platen arrangement, resulted in a fully formed and very flat sandwich panel. A thermocouple, used to monitor temperatures at the center of the panel, shifted during the fabrication and produced a 1.3 mm (0.051 in.) deep groove in the panel. This was considered to be a mechanical malfunction and not a defect in the fabrication process.

Inspection showed that the panel deviated only 0.178 mm (0.007 in.) from a true plane (figure 29). There were very shallow waves parallel to the truss core (figure 30). Section A-A shows a wavelength of 65.5 mm (2.58 in.) with a height of 0.091 mm (0.0036 in.), and section B-B shows the critical condition with a wavelength of 37.3 mm (1.47 in.) (truss core node spacing) and a height of 0.076 mm (0.003 in.). This panel as formed meets the NASA surface criteria for an LFC surface.

The panel was chem-milled to remove the alpha case and reinspected to assure that the panel still meets the surface waviness criteria. Figure 31 shows the inspection records which confirm the panel still meets the smoothness criteria.

3.3 LFC Strip Installation

3.3.1 Adhesive system selection - Initially it was planned to investigate several adhesives and procedures for applying them. One such consideration was to impregnate an open-cell foam with a controlled amount of thermosetting adhesive along one edge. The idea behind this approach was that the foam could be compressed to squeeze out the adhesive for bonding the LFC strip in place. By using a caul sheet and appropriate loading (e.g., weights or vacuum), the strips would be bonded flush with the adjacent sheet faces. The foam would, in theory, compensate for tolerance variations. However, because of the number of variables involved in this system, such as types of foam, cell size, degree of openness, and adhesive selection, it was decided that it would not be possible to select a single workable combination of materials without extensive testing. Hence, because of limited time and funds available for this effort, it was determined that a single attempt would be made after a review of candidate materials. After a thorough consideration of potentially usable adhesives, it was decided that the best chance of success was with the use of a polysulfide fuel tank sealant.

Some of the considerations involved in this selection were surface preparation of the metal prior to application, curing temperature, time requirements, ease of application, pot life, viscosity of material at time of application, environmental resistance, and, of course, mechanical properties. The choice for this feasibility evaluation was PR-1422 B-2, which meets the requirements of MIL-S-8802, Class B-2. This material is a two-part polysulfide compound which is highly thixotropic, but can be applied with an extrusion or injection gun and will not flow from vertical or overhead surfaces after application. Surfaces should be solvent-cleaned with a suitable solvent prior to application of the material which has an application time limit of at least 2 hours, is tack-free in 40 hours maximum, and will fully cure at room temperature in about 3 days. Cure can be accelerated by heating up to 54.4° C (130° F). It has a tensile strength of about 1379 x 10^3 Pa (200 psi) with ultimate elongation of 200 percent; after 7 days at 121° C (250° F) its strength is about 862 x 10^3 Pa (125 psi), with elongation still 100 percent. Its peel strength on titanium is about 3.5N/mm (20 pound/inch) of width after 7 days' soak in jet reference fluid at 60° C (140° F).

3.3.2 Subscale trial - Prior to attempting to install the strips on SPF/DB panels, it was decided that it would be desirable to have a subscale trial in which the LFC strip would be simulated by a piece of transparent

polycarbonate plastic and strips of metal bolted to a metal plate to simulate the panel. The transparent plastic would enable us to observe the movement of the sealant under pressure, and thus the sealant bead diameter could be optimized. The essential steps involved in making this subscale test were as follows:

(1) Solvent-wipe all metal surfaces with MEK.

(2) Extrude a bead of sealant along bottom edges of groove, keeping it as uniform as possible.

(3) Place shims at each corner of groove, to center strip in groove.

(4) Place strips in groove, cover with a caul sheet with release on it, and force down with weights to panel level.

(5) Allow to cure for 24 hours, remove weights and caul sheet, and remove any excess sealant from surface of panel.

(6) Observe sealant flow to determine that it went to, but not beyond, scribe lines representing plenum slot, and that space between strip and side of groove was at least partly filled.

(7) If first attempt was not satisfactory, clean sealant from all surfaces and repeat with a different diameter of bead.

On the second try, it was found that a bead diameter of about 2.54 mm (0.1 inch) met the requirements described in step 6, as shown in figure 32.

3.3.3 Installation - The SPF/DB panel was masked to chem-mill four grooves in the flat surface for installation of the simulated LFC strips. After the grooves were chem-milled, the panel surface still maintained its condition of flatness.

Having established a bead diameter of approximately 2.54 mm (0.1 inch) as outlined in the preceding, it was a simple matter to repeat steps 1 through 5 on the actual panel. In this manner, the two simulated LFC strips were bonded into the slots on the SPF/DB panel.

A polycarbonate LFC strip was bonded into one of the edge grooves. This clear material was used to illustrate the width of the bond and the clear path for the flow into the plenum chamber. A 6Al-4V titanium alloy strip was bonded into the adjacent groove with the same bonding procedure to demonstrate the compatibility of the adhesive system with titanium LFC strips. The completed panel, along with the subscale bonding specimen, is shown in figure 33. A closeup of the strip installation is shown in figure 34. The transparent strip shows the extent of the adhesive migration during curing.

To determine the panel surface quality after installation of the LFC strips, a dial gage was used to measure the flushness of the strips with the panel surface. Results of this inspection are documented in figure 35. The maximum up-step, as shown in the figure, is 0.050 mm (0.002 in.) and the maximum down step is 0.102 mm (0.004 in.), both of which are below the maximum specified in figure 9 for an altitude of 11,582 mm (38,000 ft).

4.0 EVALUATION OF RESULTS

The two basic objectives of this program have been met. The demonstration of the SPF/DB process to produce a panel which meets the NASA specifications for LFC panel smoothness has been accomplished by the development of a new tooling concept. The feasibility of adhesively bonding strips which incorporate provisions for laminar flow control onto the surface of an SPF/DB titanium panel has been demonstrated and verified.

4.1 SPF/DB Panel Fabrication

The tooling method that was developed to produce panel 4 proved to be capable of producing SPF/DB titanium panels which meet both single and multiple wave criteria as well as surface roughness requirements necessary to prevent tripping the boundary layer on a laminar flow wing, as specified in figures 8 and 9.

The first stage, or bonding phase, of the fabrication process is quite conventional and uses standard tools consisting of a flat base and an upper cavity tool. This set of tools can also be used for the breakthrough of the internal argon gas after the bonding is completed. The inflation, or superplastic forming, phase requires a mild steel picture frame to contain the forming of the panel edges. For flat sandwich, a pair of parallel ceramic heating platens is required; for contoured panels, the heating platens would be contoured. The thermal stability of the ceramic platens allows the inflated panel to be cooled in place in the press under scheduled pressure, both internal and external, to prevent panel distortion.

4.2 LFC Strip Installation

The PR1422 B-2 adhesive system, manufactured by Product Research, Inc, was selected for bonding the simulated LFC strips into the panel surface slots. This material, which meets the criteria of MIL-S-8802, is applied to the corners of the slots as a 2.54 mm (0.1 in.) diameter bead with the strip pressed into place. The adhesive bonds the strip into the slot and extrudes out to the mold line of the panel to fill the approximately 1 mm (0.040 in.) gap between the edge of the slot and the strip. The adhesive also extrudes toward the center of the slot, but not so that it would plug metering holes in either the slot or the LFC strip. Measurements of the flushness of the strips revealed that the slight deviation of the strip surface from the panel surface was well below the maximum specified in figure 9.

5.0 RECOMMENDATIONS

Surface smoothness is one of the most critical requirements for successful performance of an LFC system. Previous NASA contracts have demonstrated the feasibility of fabricating LFC wing surfaces using SPF/DB titanium technology, but this program was the first to specifically address the surface quality of this type of structure. Although it has shown that smoothness criteria can be met with SPF/DB titanium panels which incorporate separate LFC strips, much additional work must be done to apply the design to full-size wings. This includes investigations into other surface smoothness problems, scale-up to larger panels, fabrication of separate LFC strips, and extension of the technology to military aircraft.

5.1 Smoothness

Since the capability of the SPF/DB process to produce individual panels of acceptable smoothness has been demonstrated, the compatibility of panel joints and splices with the smoothness criteria should be addressed next. Plasma arc-welded joints, which are recommended in reference 2, should be designed and fabricated, along with mechanically fastened splices to establish the optimum method for producing acceptable smoothness.

5.2 Scale-up

With the feasibility of producing satisfactory SPF/DB panels in sizes up to 0.61 by 0.61 meters (24 by 24 inches) now established, the next step should be to demonstrate larger sizes and contoured panels. Existing silk screens capable of providing the stopoff pattern for panels 1.01 by 1.27 meters (40 by 50 inches) in both flat and contoured shapes are available at NAAO and could be used in fabricating panels which are the next logical size in scale-up. Full-scale wing panels, up to 1.0 by 3.0 meters (40 by 120 inches) should then be fabricated and joined to form an entire wing box to complete the scale-up process. During these scale-up tasks, surface smoothness must be continually monitored to insure that the larger panels exhibit surface quality the same as or better than that obtained in this program.

5.3 LFC Strip Fabrication and Installation

The concepts for separate LFC strips, developed in reference 2 and investigated in this program, should be demonstrated by fabrication and installation of the strips in a wing cover.

Fabrication of both a slotted strip and a perforated strip need to be demonstrated. The slotted strip should be fabricated by locating and fastening two separate strips to make the slot. The perforated strip should be drilled using the electron beam (EB) process. The method of joining the component parts of both types of strip should include resistance welding or weld bonding.

Installation of the LFC strips in a groove in the wing surface including joints, shown in figure 7, should be demonstrated. The evaluation of sealant as an adhesive for bonding the LFC strips in place has, in this program, been strictly qualitative. It is therefore recommended that selected mechanical and environmental tests be performed to determine the suitability of this material for its intended purpose. At the same time other types of adhesives, such as epoxies or polyurethanes, should also be investigated and tested. Evaluation should be done using conventional tests for adhesives such as lap shear peel. Additionally, element tests typical of the structure should be conducted to provide higher confidence in the selected system. Ultimately, it would be desirable to come up with a production method of application for the selected adhesive which would be to a large measure automated, providing consistency and repeatability.

5.4 Military Applications

Current IR&D studies, summarized in Appendix A, are projecting substantial benefits in both fuel and cost savings when LFC technology is applied to advanced bomber aircraft. A truss-core sandwich structure as shown in figure A-1, with LFC provisions similar to the concept shown in figure 7, installed only on the leading edge of the wing, can produce over $44 million in savings over a 20-year period.

With savings of this magnitude available, the extension of LFC technology into military applications is essential. An in-depth design study in which the moldline structure, replaceable LFC strips, internal ducting, and pumping system are addressed is recommended as the first step. This study, when conducted on a variable sweep bomber aircraft baseline, will introduce a unique feature which has not been investigated in any previous studies. This is the method for ducting the bleed air through the wing pivot. Several methods are available to accomplish this, but additional design, analysis, and testing are necessary to optimize the concept.

Scale-up to a full size wing, followed by flight testing, would be the final proof of the concept.

Appendix

APPLICATION OF LFC TO MILITARY AIRCRAFT

As part of Rockwell's continuing IR&D studies on advanced aircraft, the payoff of incorporating LFC provisions into the wing of an advanced variable sweep bomber has been investigated. Although not part of this NASA contract, the results are summarized in this appendix because of their applicability to the subject of this report.

The active LFC (with boundary layer bleed) was limited to the forward and upper surfaces of the wing leading edge, as shown in figure A-1. From the front spar to the rear spar, laminar flow is retained on the upper surface by virtue of the supercritical airfoil shape. These provisions are assumed to provide laminar flow over the forward 60 percent of the wing upper surface, resulting in a drag reduction of 21 drag counts, for the climb, cruise, refuel, and loiter legs of a typical training mission. The net result is a savings of 1241 L (328 gallons) of fuel per mission. For a fleet of 100 bombers, over 20-year life cycle, this amounts to 151.3×10^6 L (40×10^6 gallons) of fuel and $44.2 million saved. In addition, the size of the tanker fleet for refueling the bombers could be reduced, providing additional savings. If the effect of the supercritical airfoil on mach drag buildup is included, these improvements more than double.

For a typical combat mission, the LFC provisions, together with this delay in drag buildup, could reduce the fuel requirement by 14,515 Kg (32,000 pounds) per aircraft. If the aircraft were down-sized to take advantage of the weight reductions, an additional life cycle cost savings of $394 million per fleet should be realized.

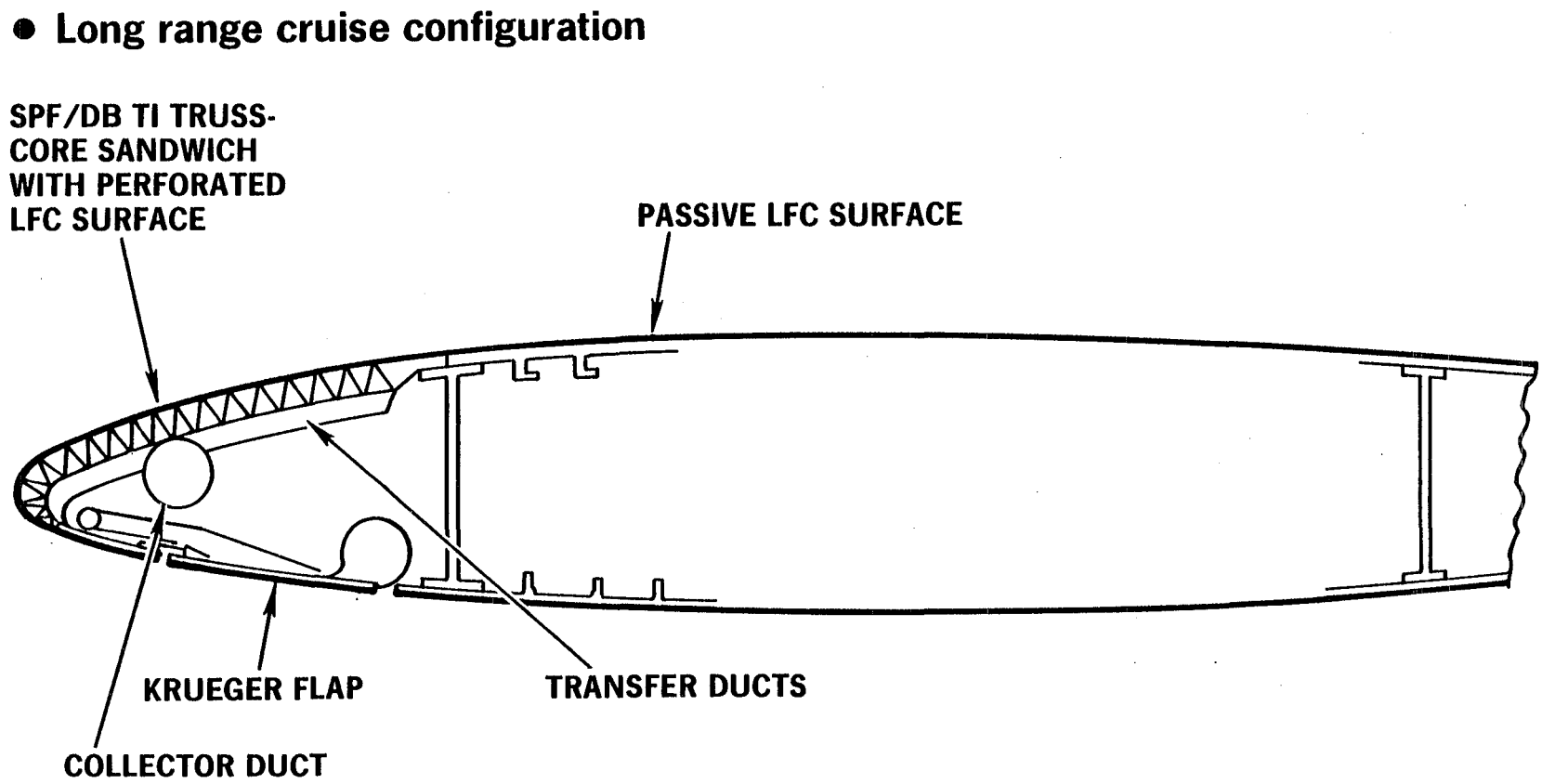

Figure A-1. - LFC application to advanced variable-sweep bomber aircraft.

REFERENCES

1. McQuilkin, F. T., "Study of the Application of Superplastically Formed and Diffusion Bonded (SPF/DB) Titanium Structure to Laminar Flow Control (LFC) Wing Design," NASA CR-158979, January 1979.

2. Wilson, V. E., "Design Studies of Laminar Flow Control (LFC) Wing Concepts Using Superplastic Forming and Diffusion Bonding (SPF/DB)," NASA CR-159220, May 1980.

3. BCAC Preliminary Design Department, "Evaluation of Laminar Flow Control System Concepts for Subsonic Commercial Transport Aircraft," NASA CR-158976, December 1978.

4. Hahn, M., and Pfenninger, W., "Prevention of Transition over a Backward Step by Suction," Journal of Aircraft, Vol. 10, No. 10, October 1973.

5. Sturgeon, R. F., Bennett, J. A. Etchberger, F. R., Ferrill, R. S., and Meade, L. E., "Study of the Application of Advanced Technologies to Laminar-Flow Control Systems for Subsonic Transport," NASA CR-133949, May 1976.

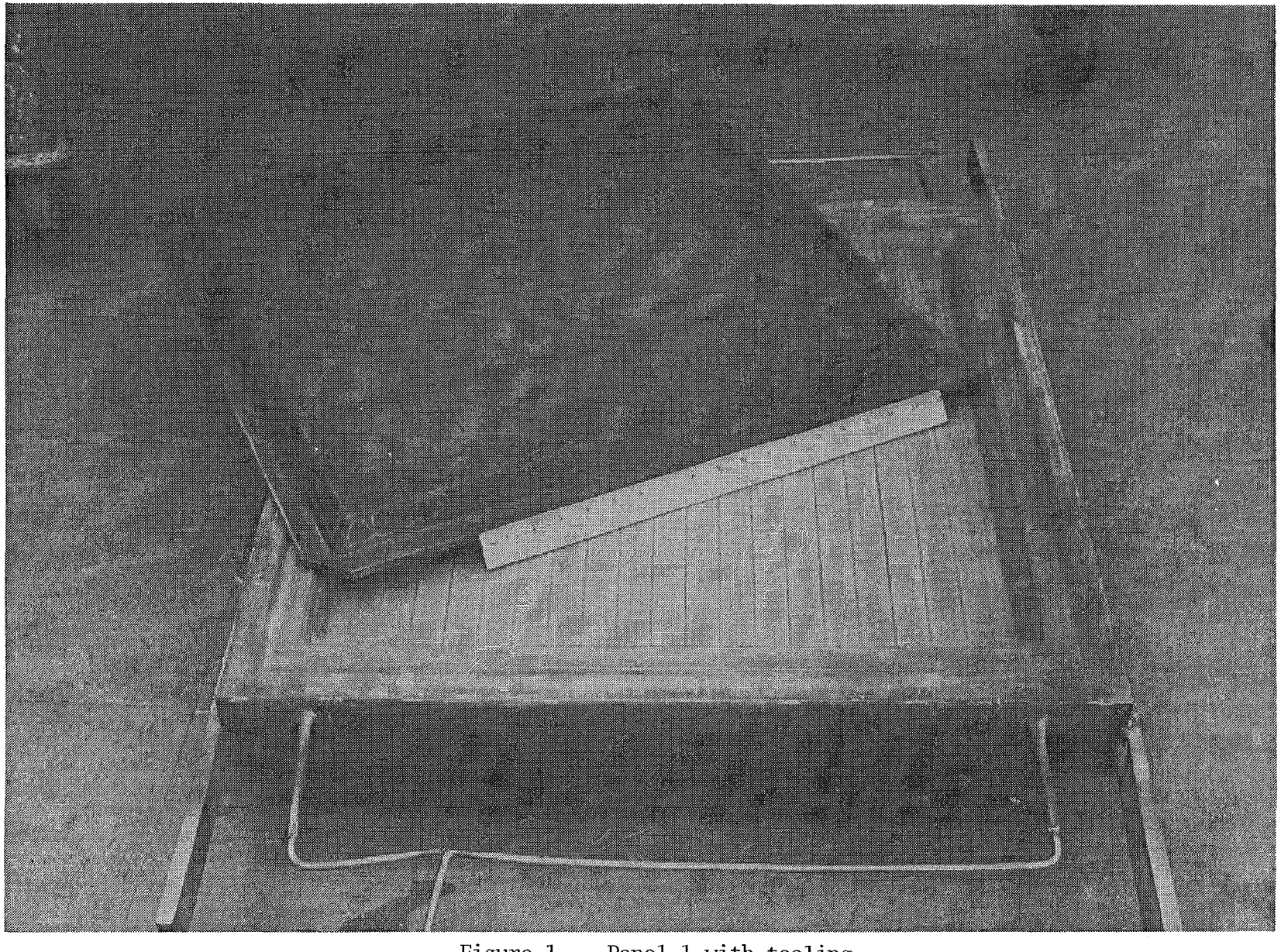

Figure 1. - Panel 1 with tooling.

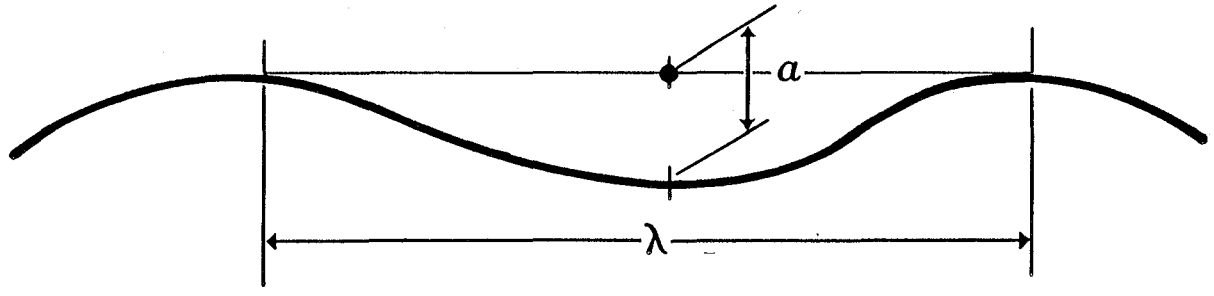

Depth of wave - αmm (in.)

Panel	λ = 38.1mm (1.5 in.)	λ = 558.8mm (22 in.)
Required (max)	0.076 (0.003)	0.300 (0.012)
Panel 1		
As formed	0	1.27 (.050)
After creep forming	0.203 (0.008)	0.279 (0.011)
Panel 2		
As formed	0	0.711 (0.028)
After machining	0	0.292 (0.012)
Panel 3	Not measured (incomplete forming)	Not measured
Panel 4 as formed	0.076 (0.003)	0.178 (0.007)

Figure 2. - Panel waviness comparison.

	K (step)	
	(above surface) mm (inch)	(below surface) mm (inch)
Maximum allowable at altitude of 11 582m (38,000 ft)	+0.381 (0.015)	-0.152 (0.006)
Measured on demo panel		
Titanium strip	+0.051 (0.002)	-0.076 (0.003)
Polycarbonate strip	+0.051 (0.002)	-0.102 (0.004)

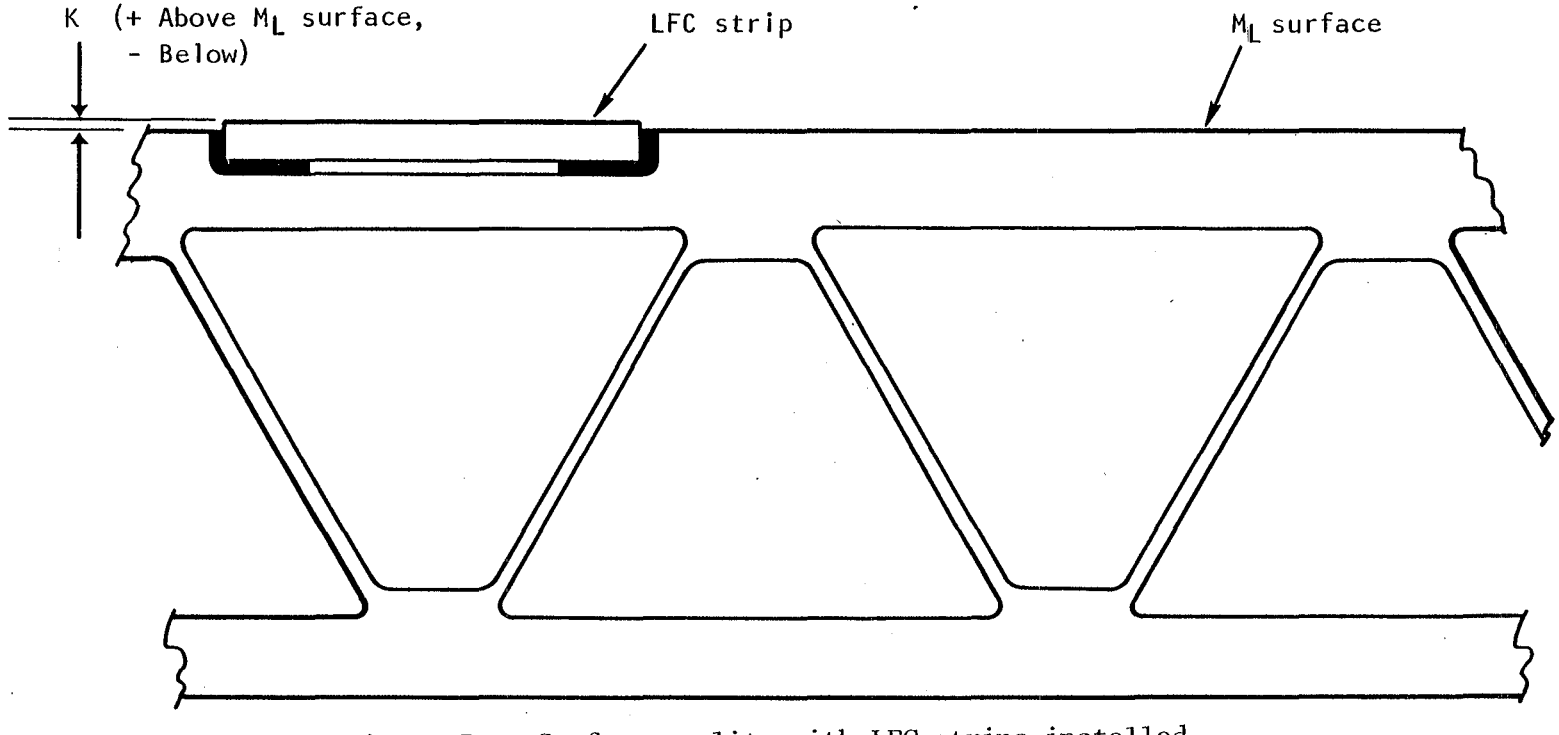

Figure 3. - Surface quality with LFC strips installed.

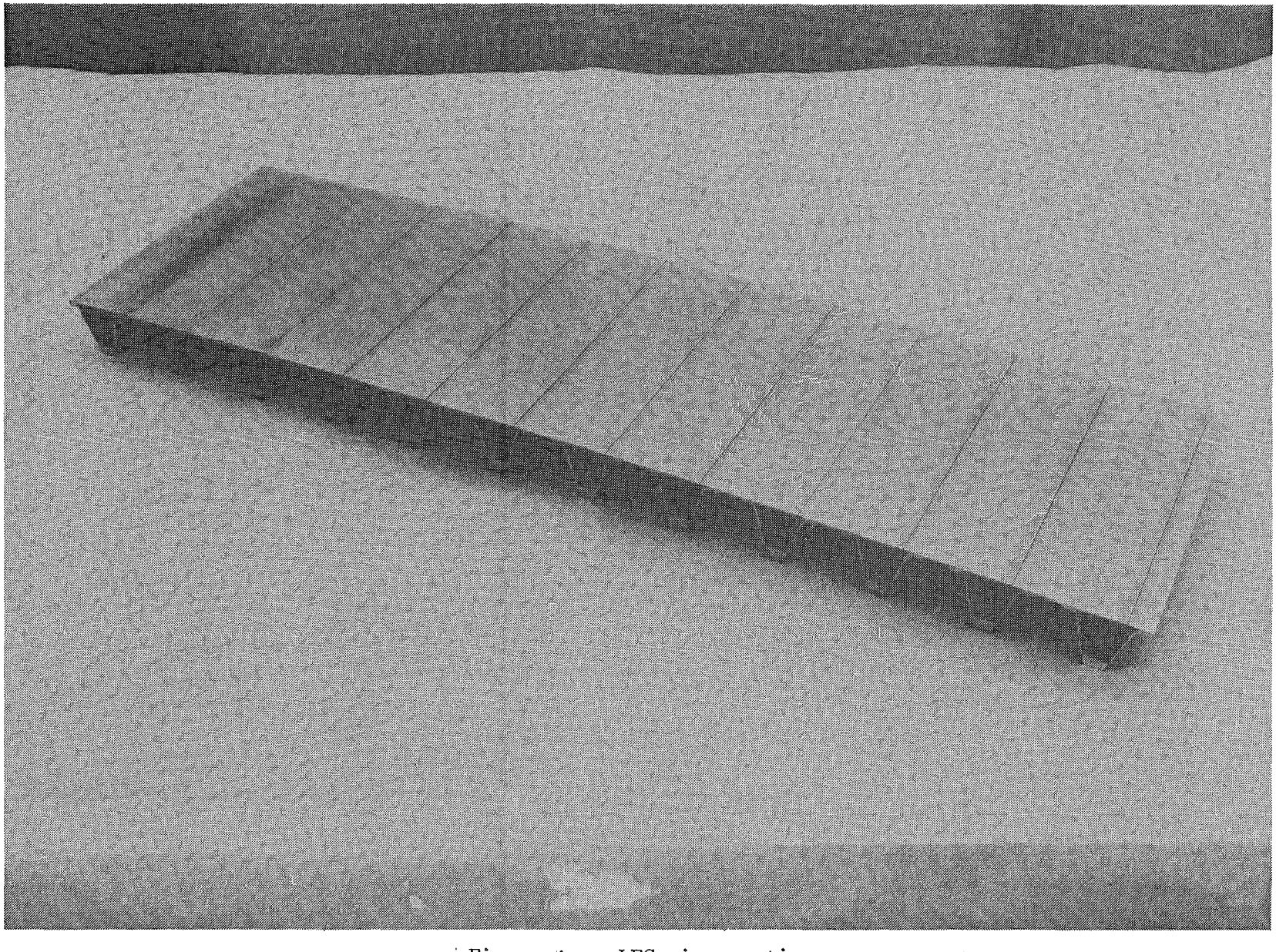

Figure 4. - LFC wing section.

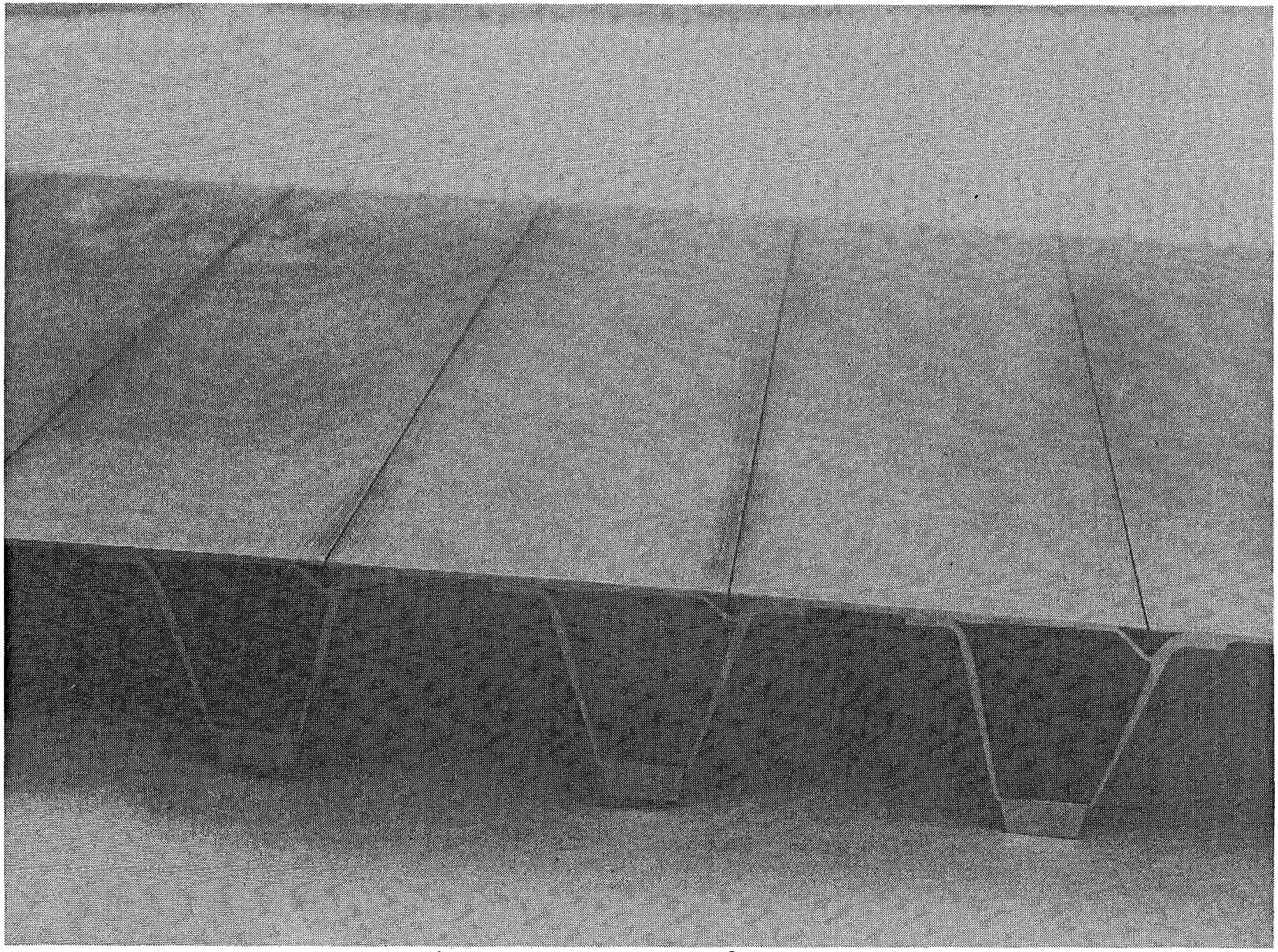

Figure 5. - LFC wing surface slots.

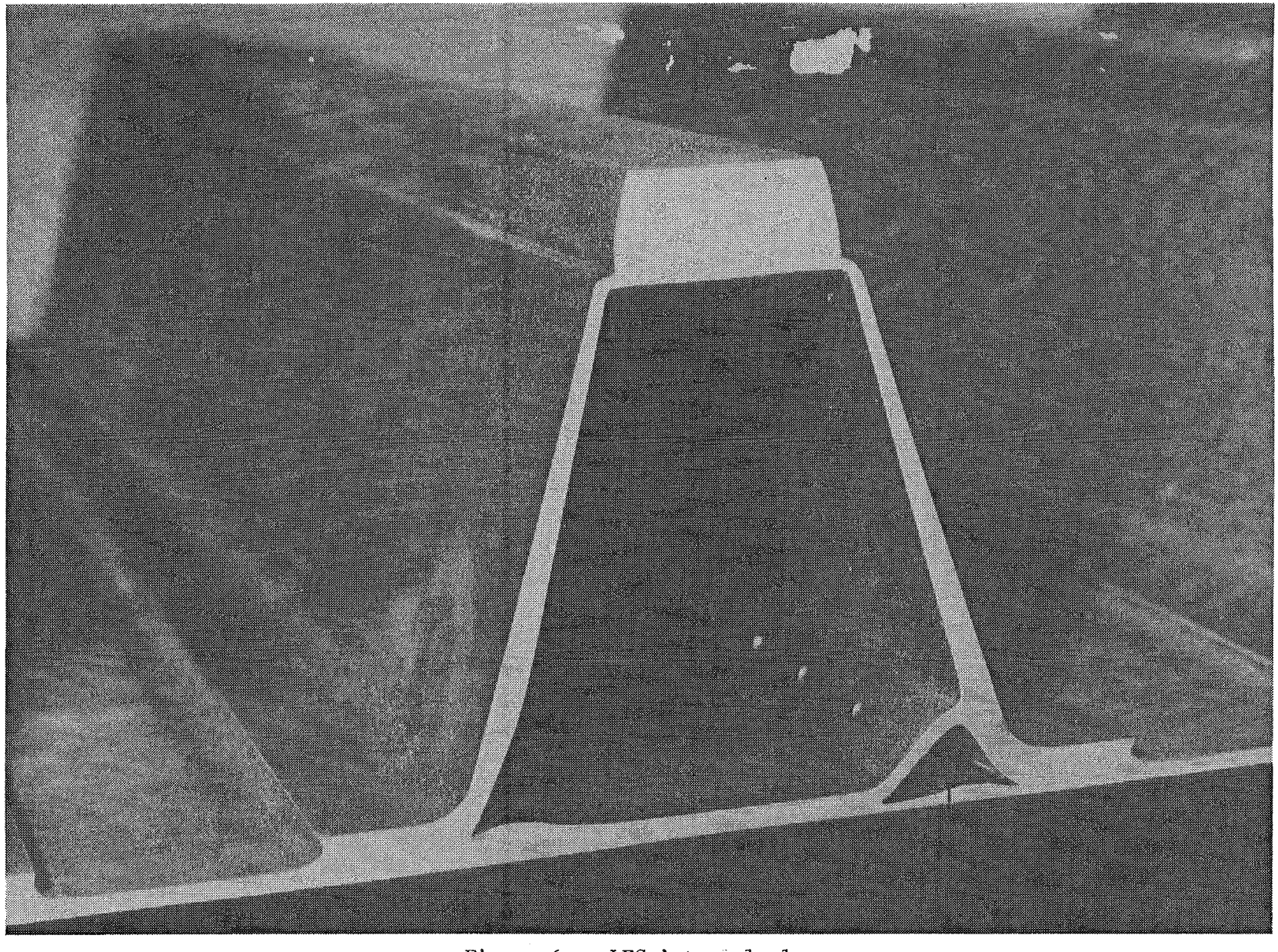

Figure 6. - LFC internal plenums.

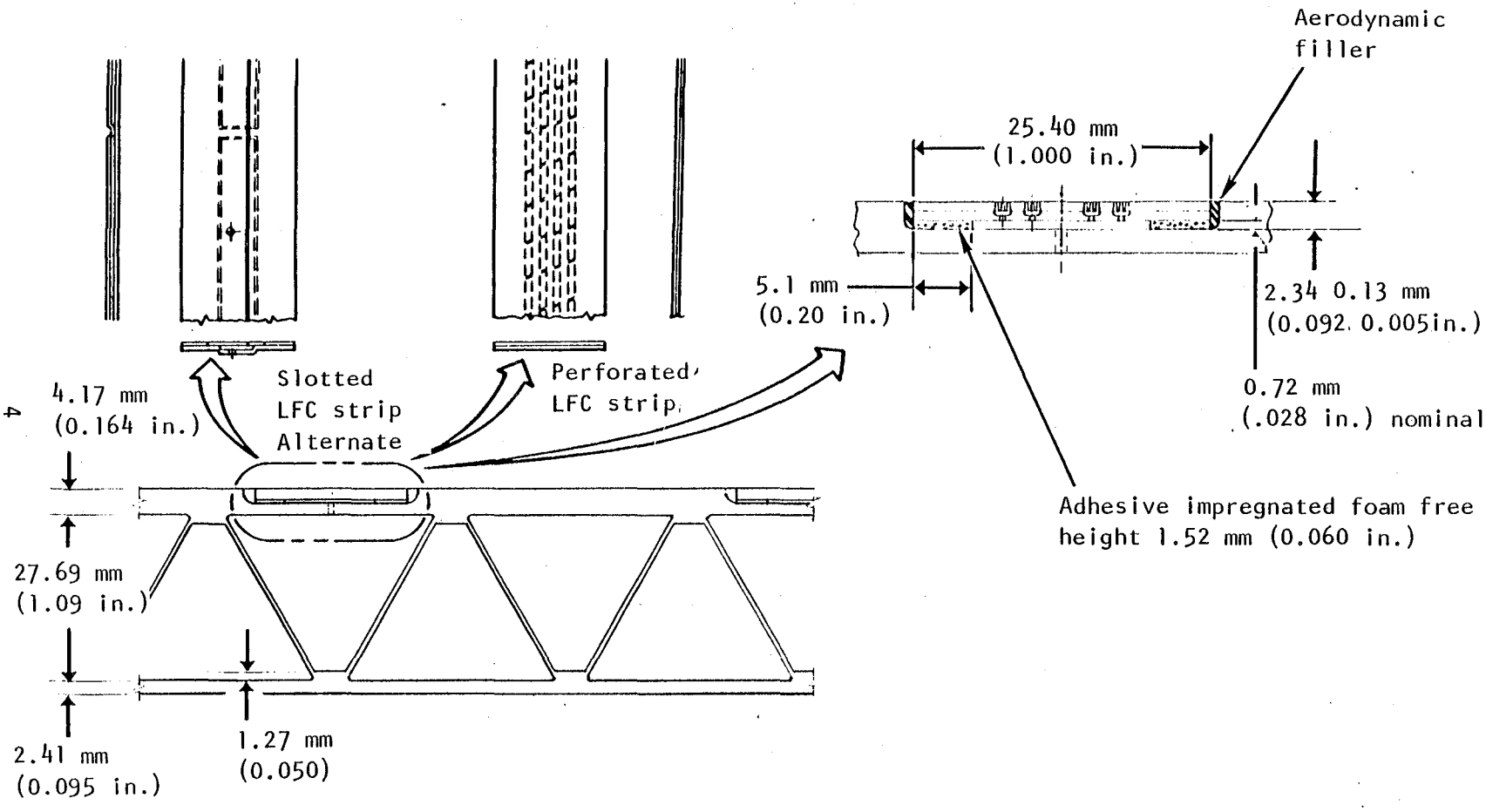

Figure 7. - Typical LFC truss core panel

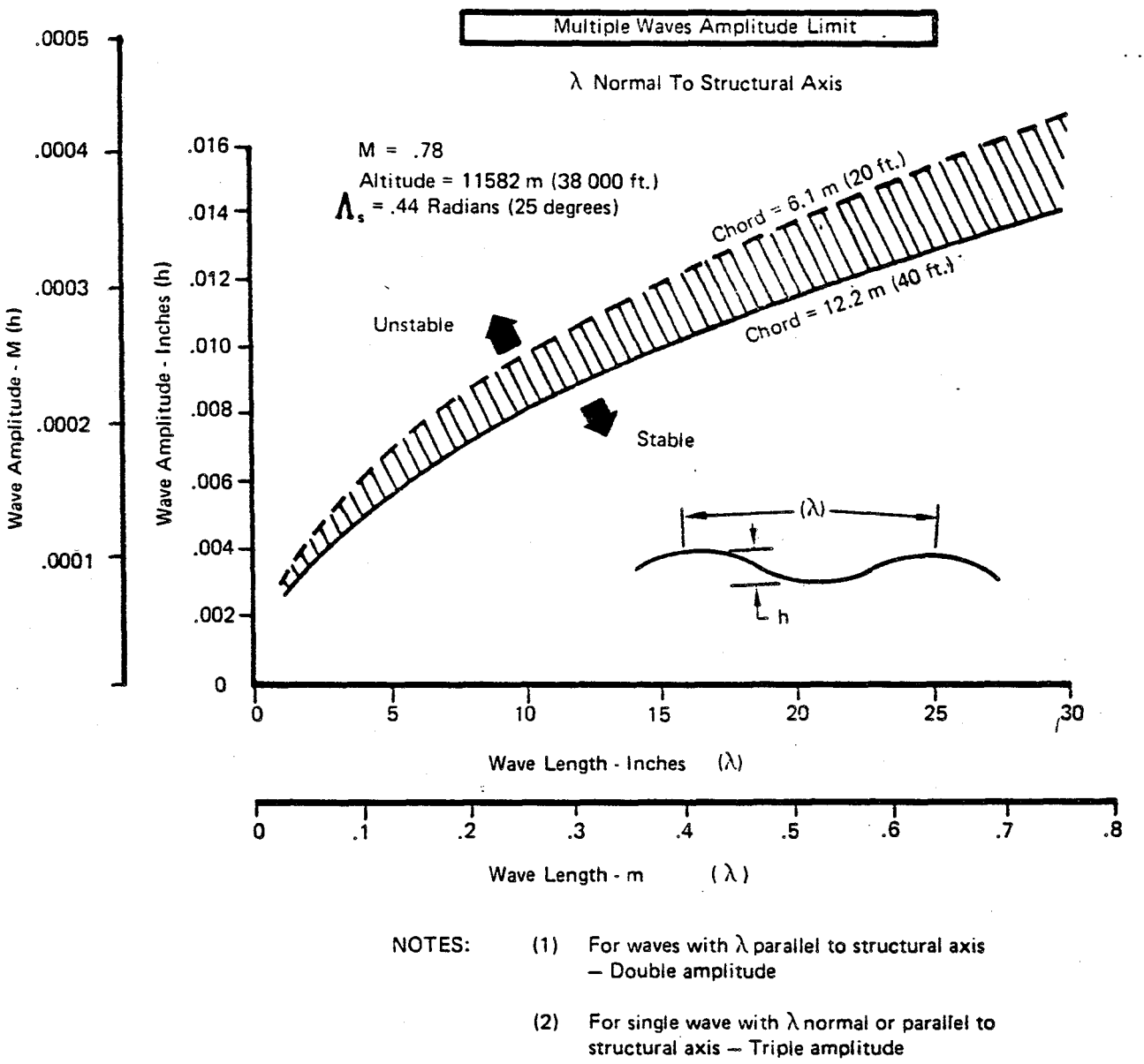

NOTES:

(1) For waves with λ parallel to structural axis — Double amplitude

(2) For single wave with λ normal or parallel to structural axis — Triple amplitude

Figure 8. - Surface waviness criteria for LFC surface.

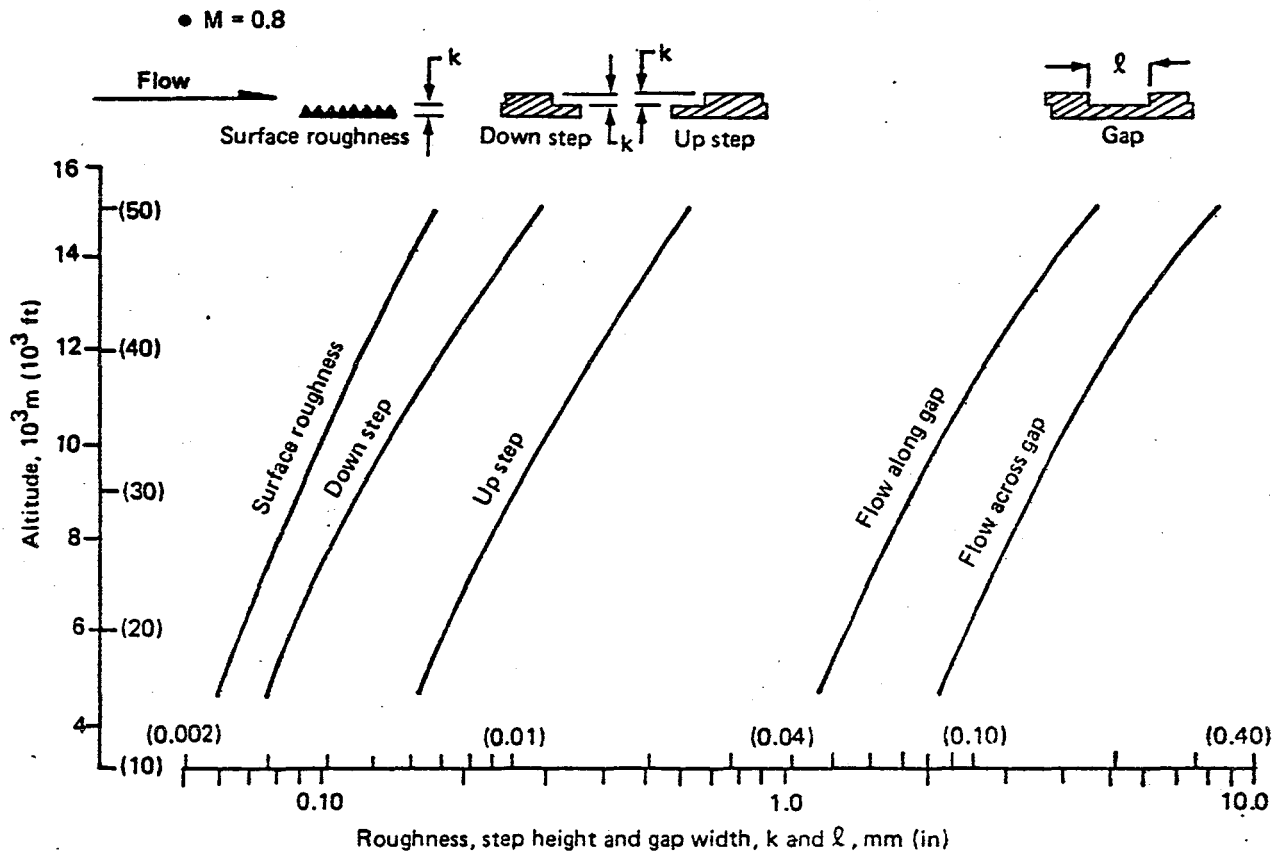

Figure 9. - Typical surface roughness, step height, and gap width criteria for an LFC wing.

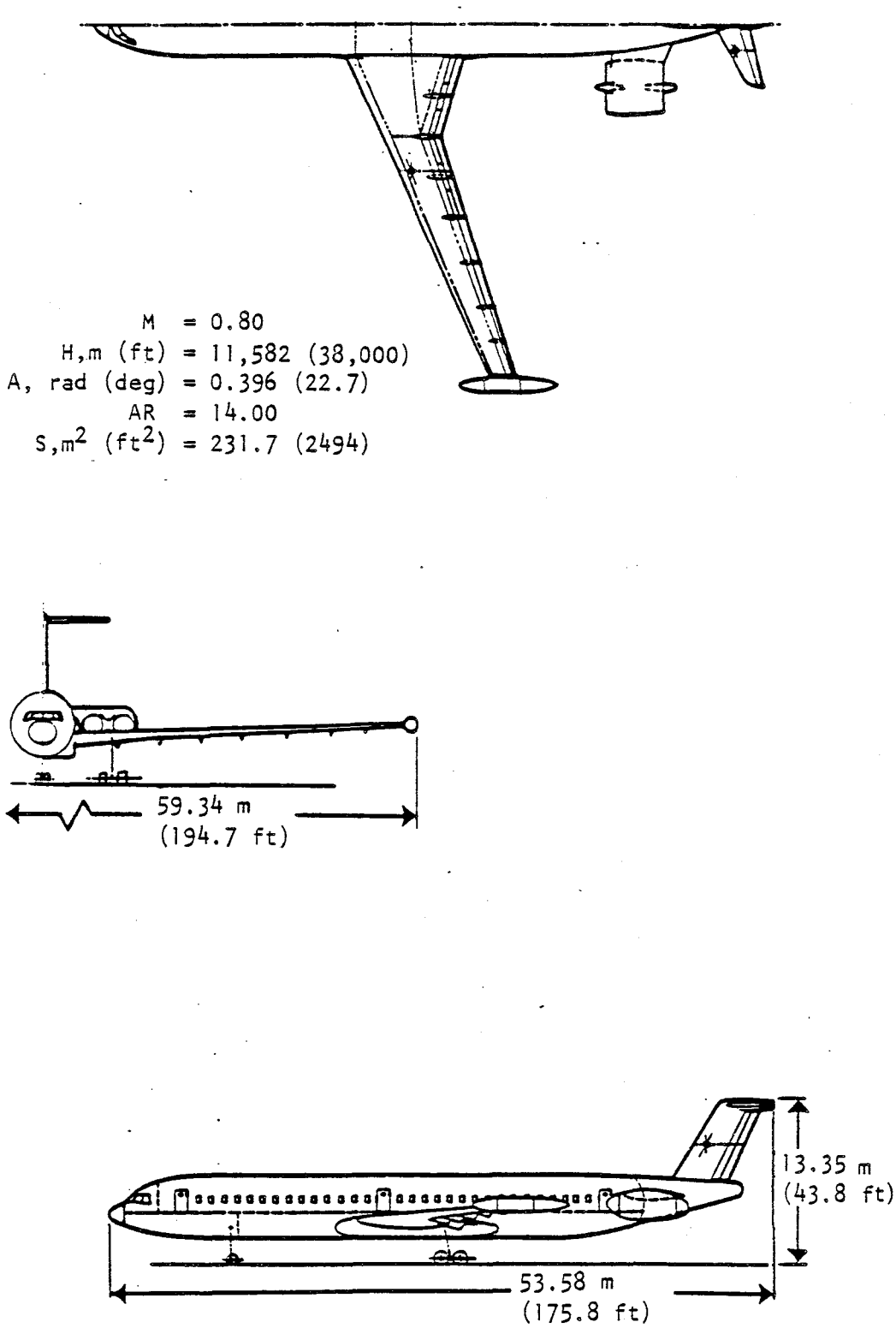

Figure 10. - General arrangement, LFC-200-R.

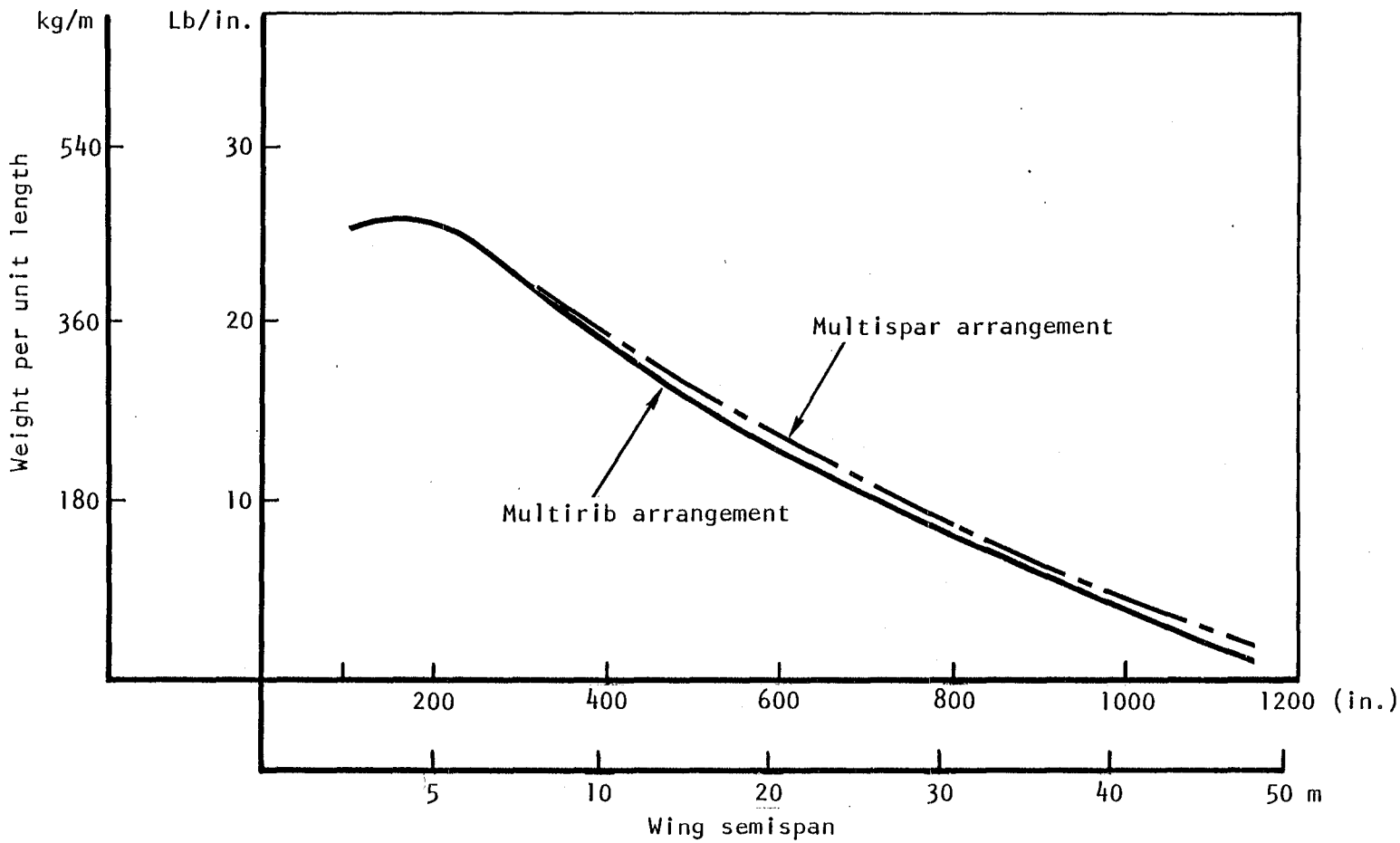

Figure 11. - Total wing weight distribution.

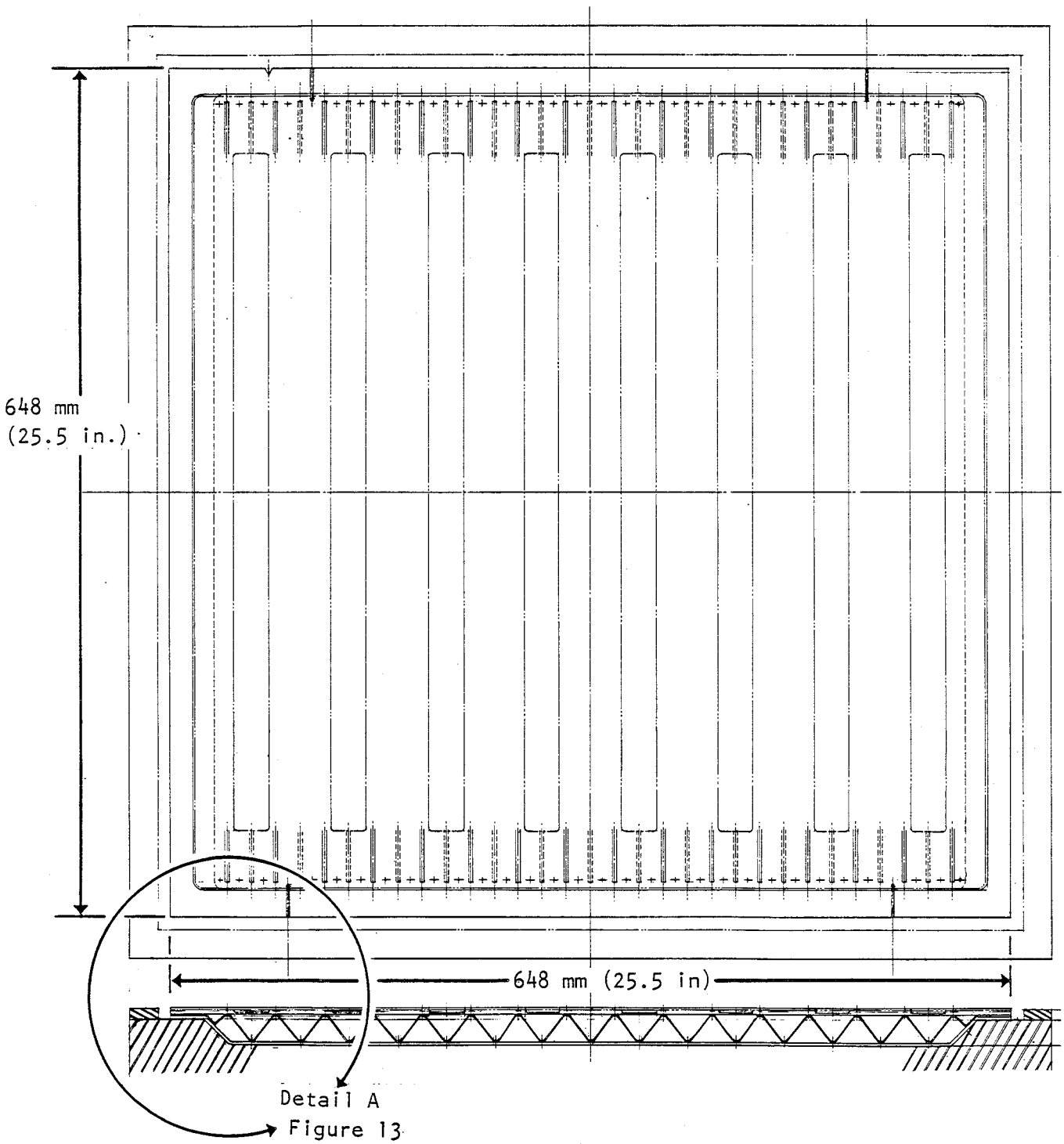

Figure 12. - SPF/DB demonstration panel in tooling.

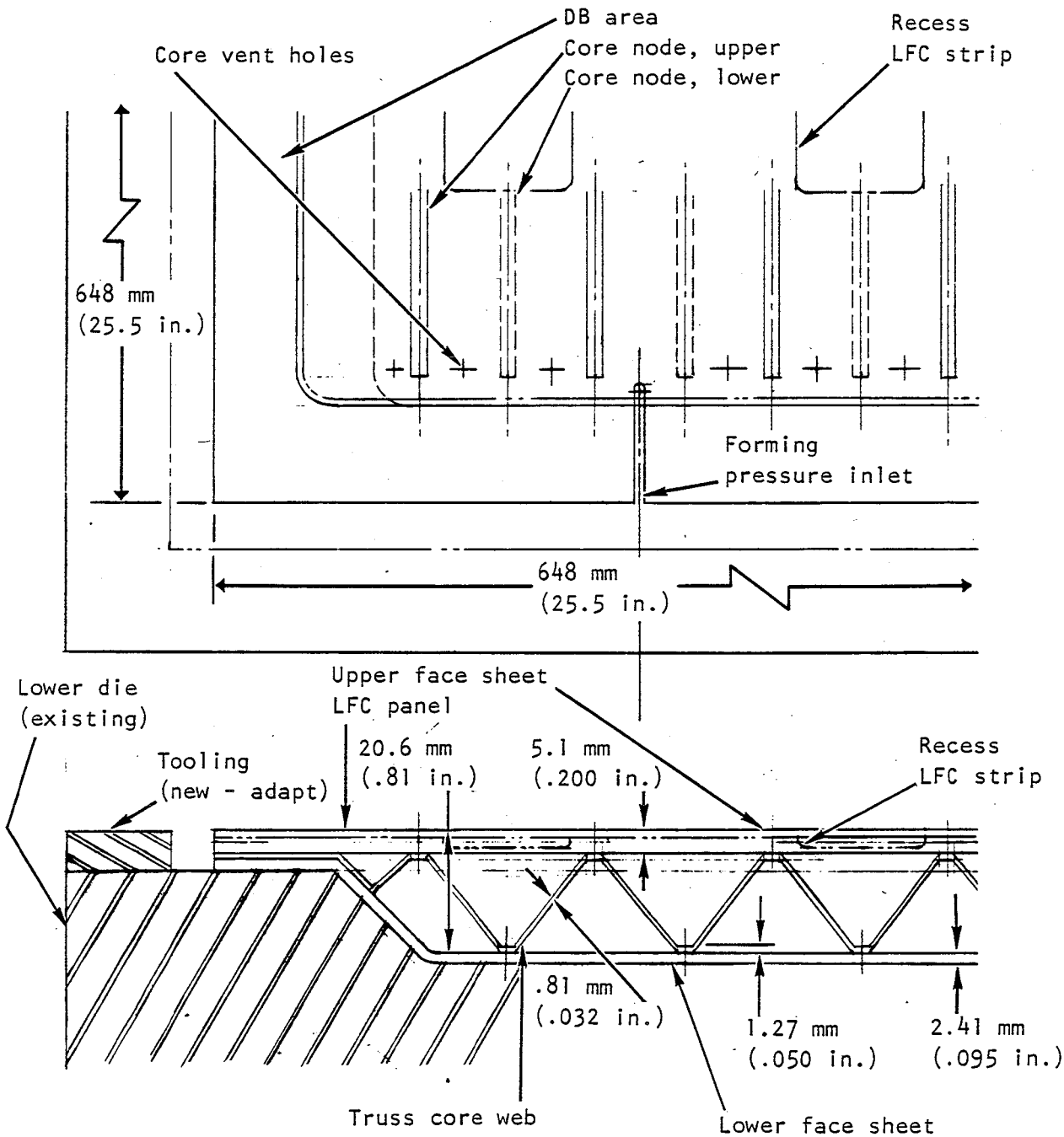

Figure 13. - Detail of truss core panel and tooling.

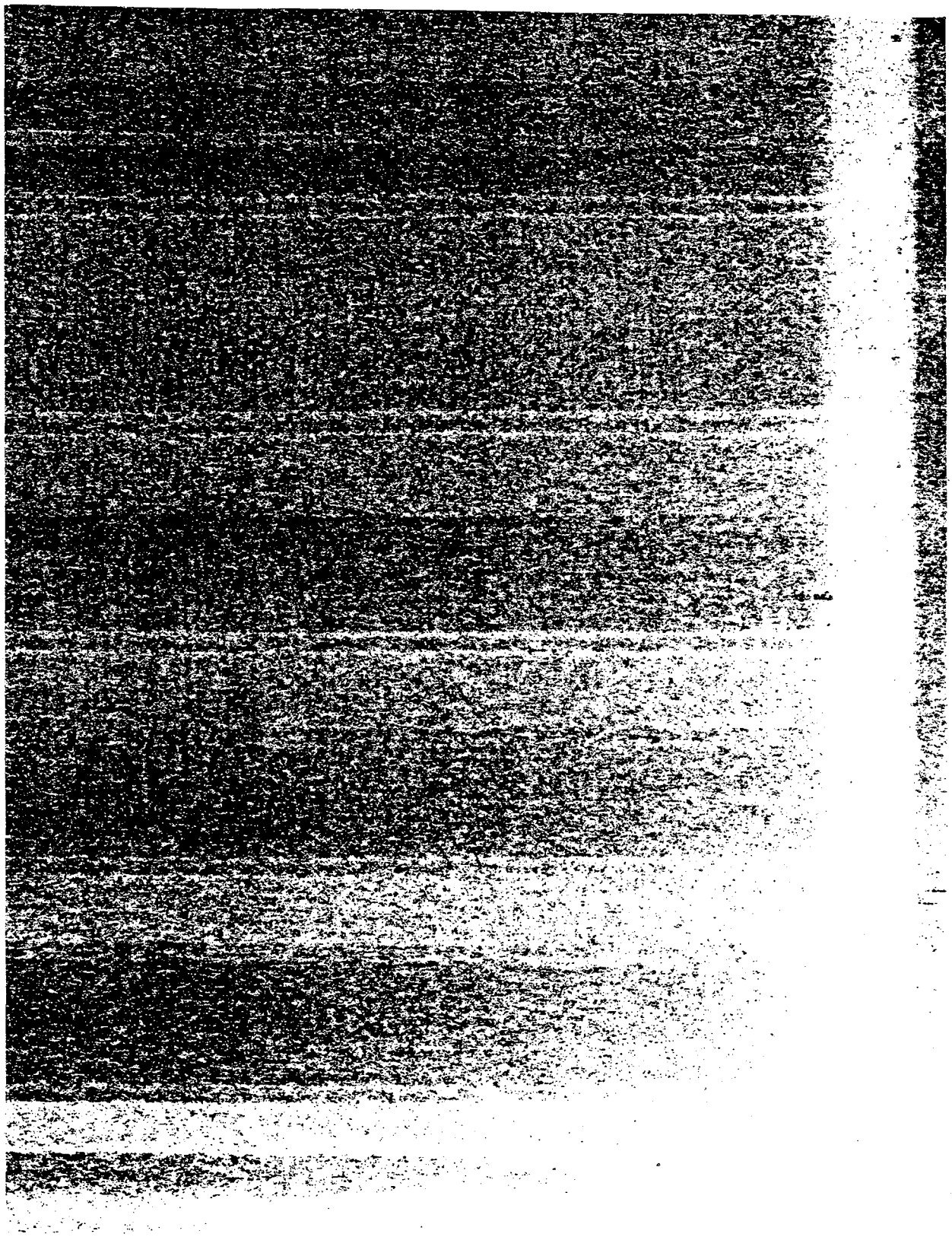

Figure 14. - LFC panel X-ray.

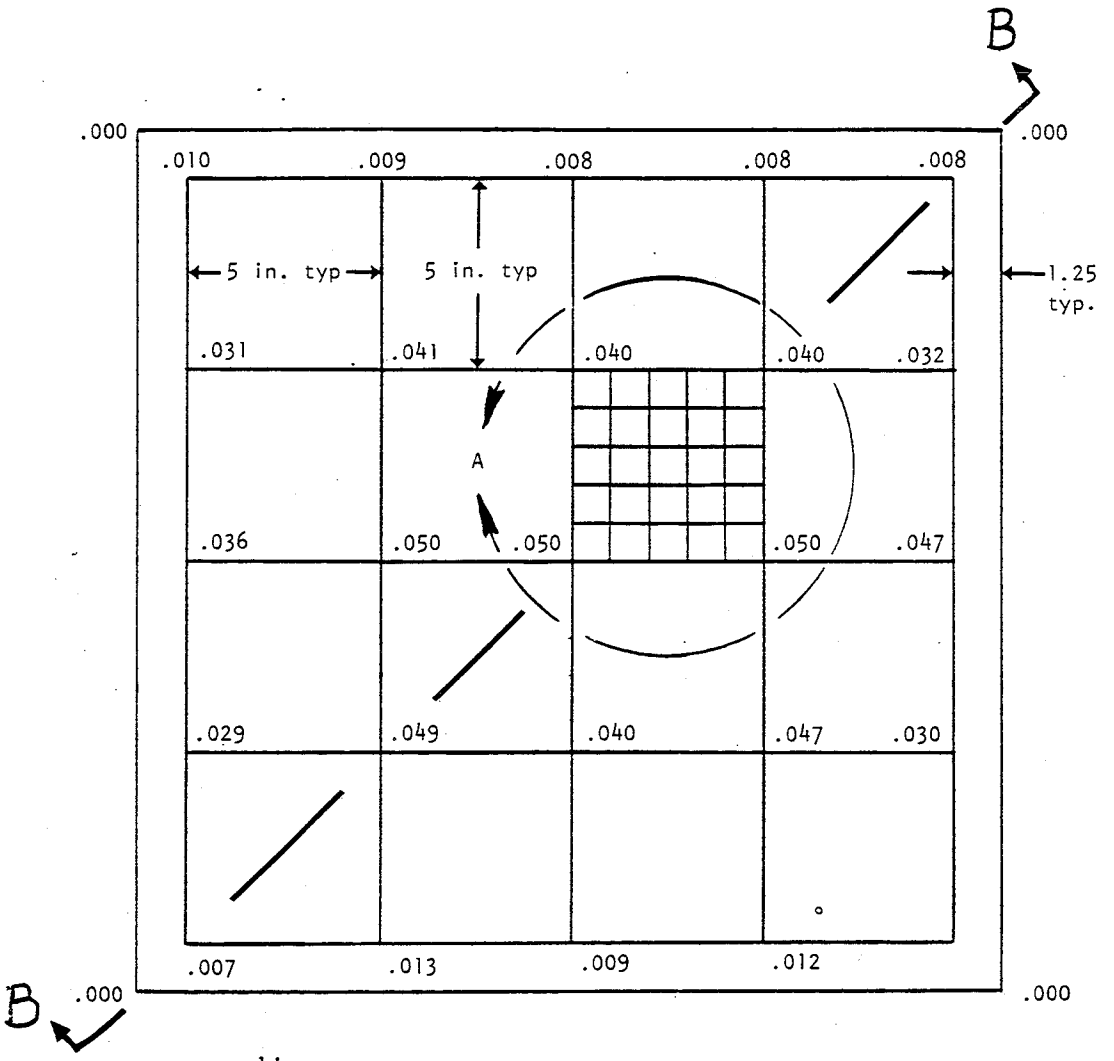

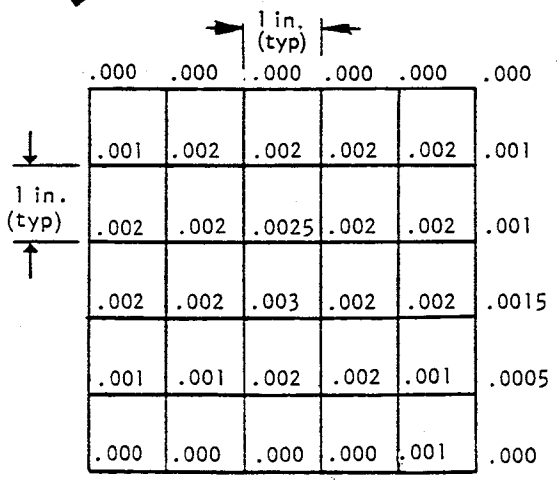

View A

(Dimensions are measured normal to 22-1/2 inch square plane)

Note: All dimensions are negative except when circled -0.

All dimensions in inches

(dimensions are measured normal to 5 inch square plane)

Figure 15. - Surface flatness inspection results.

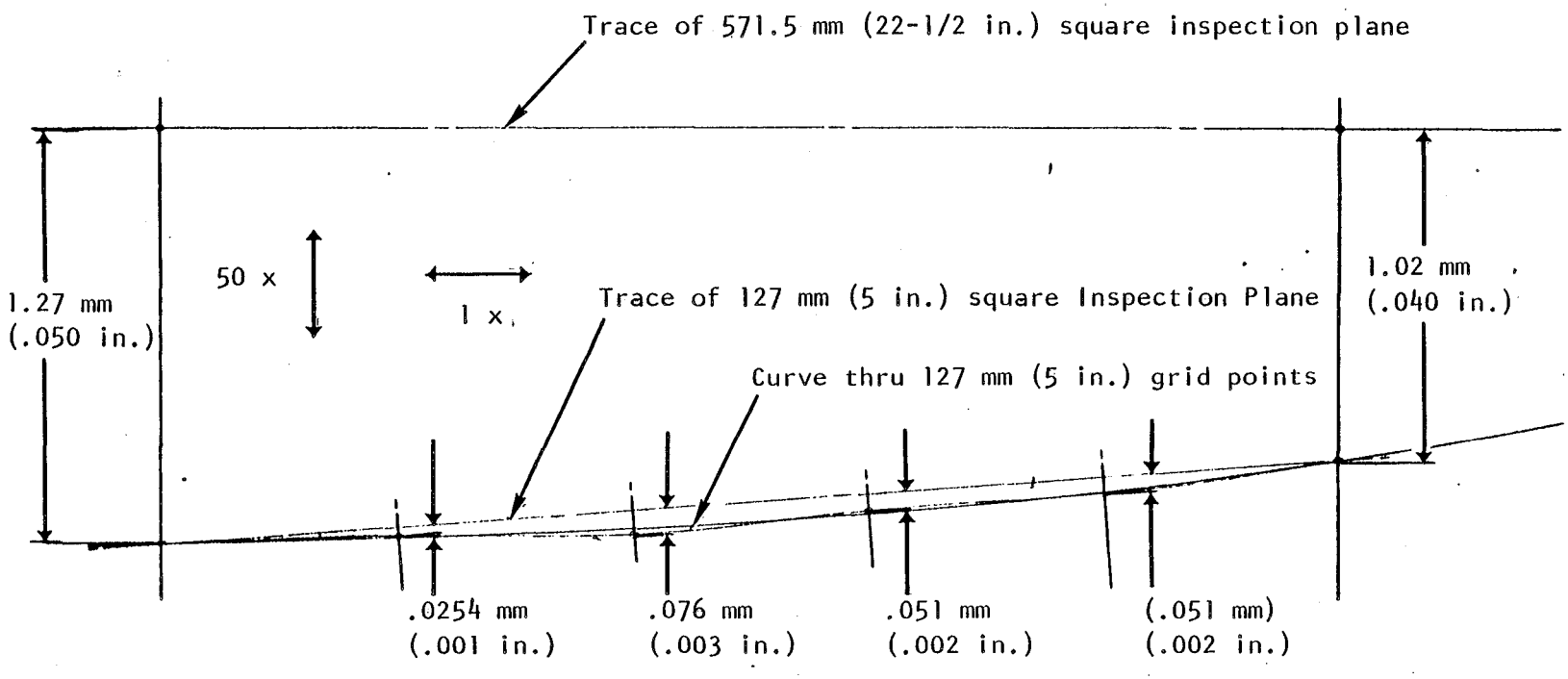

Section B-B (from figure 15)

Figure 16. - Section cut through panel upper surface (panel 1)

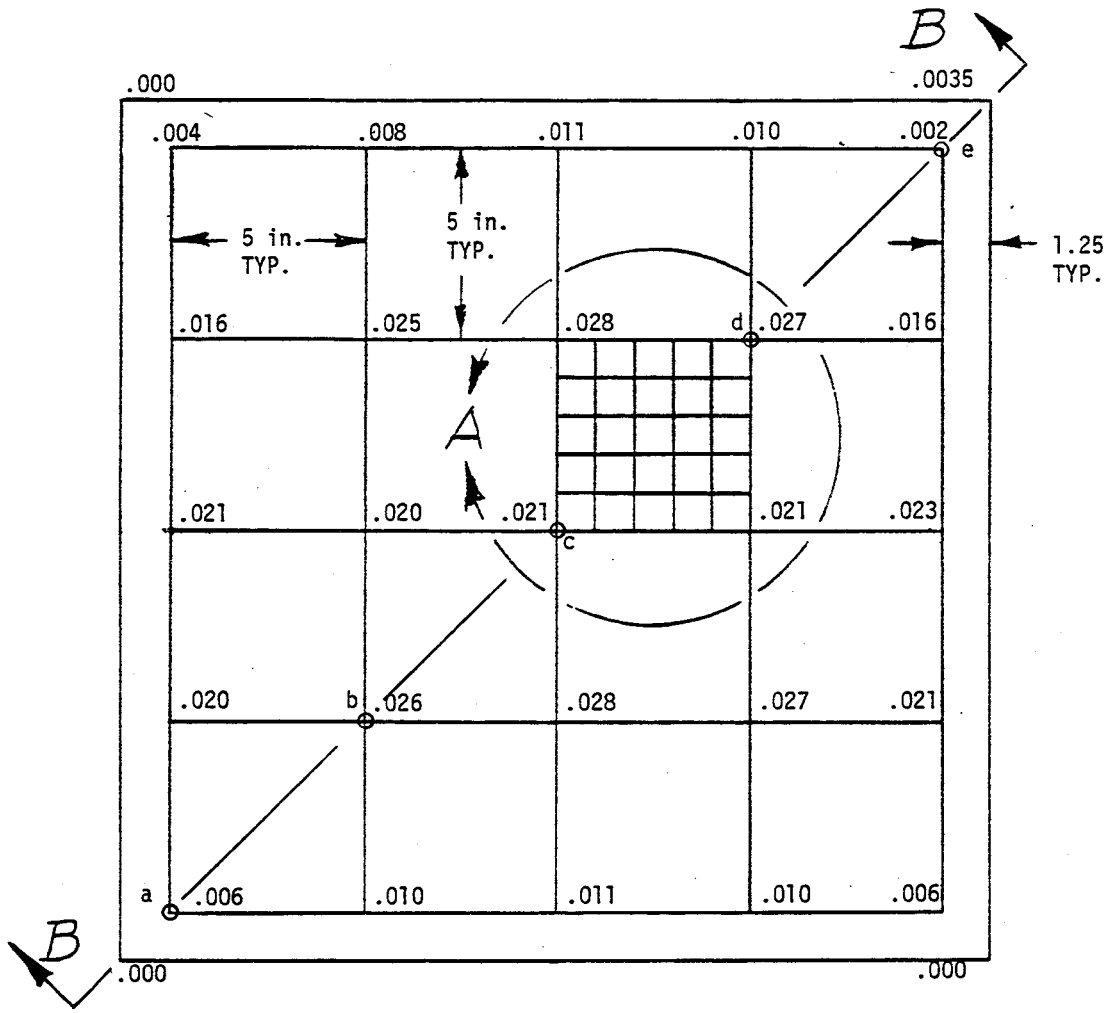

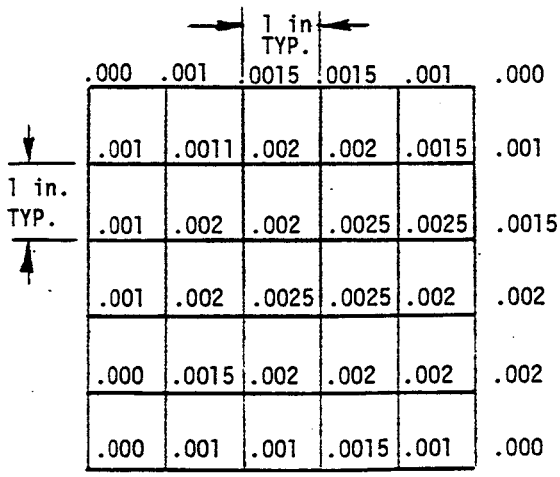

(Dimensions are measured normal to 22-1/2 inch square plane.)

All dimensions in inches

View A (Dimensions are normal to 5 inch square plane)

Figure 17. - Surface flatness inspection results (panel 2 after forming).

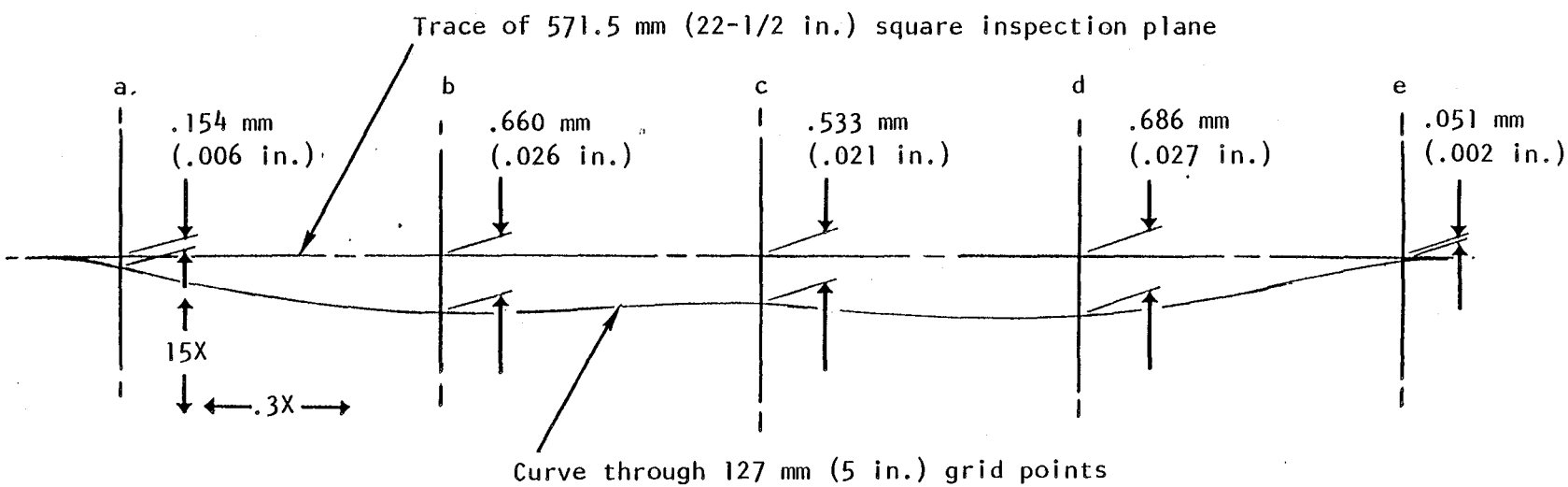

Section B-B (figure 17 a to e)

Figure 18. - Section cut through panel upper surface (panel 2 - after forming).

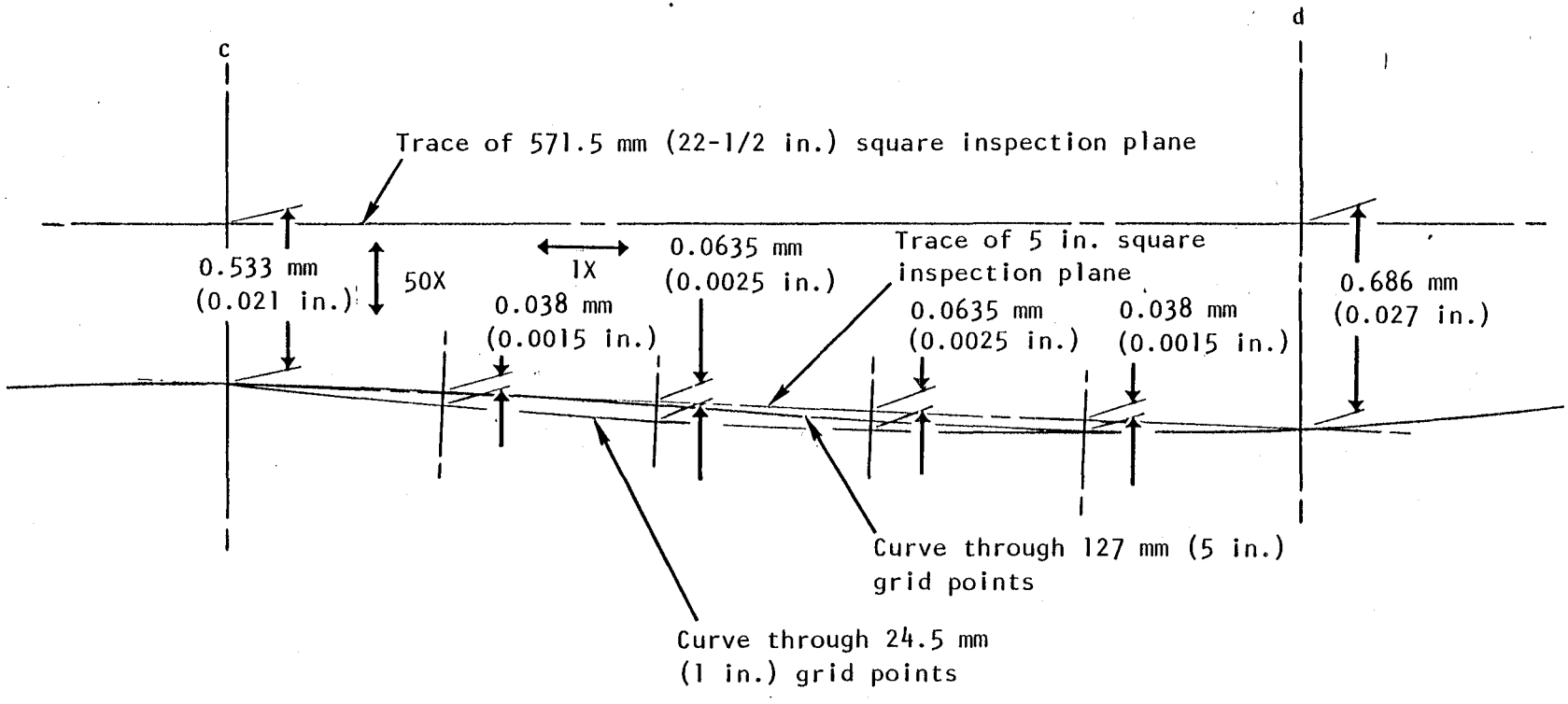

Section B-B (figure 17, c. to d.)

Figure 19. - Section cut through panel upper surface (panel 2 - after forming).

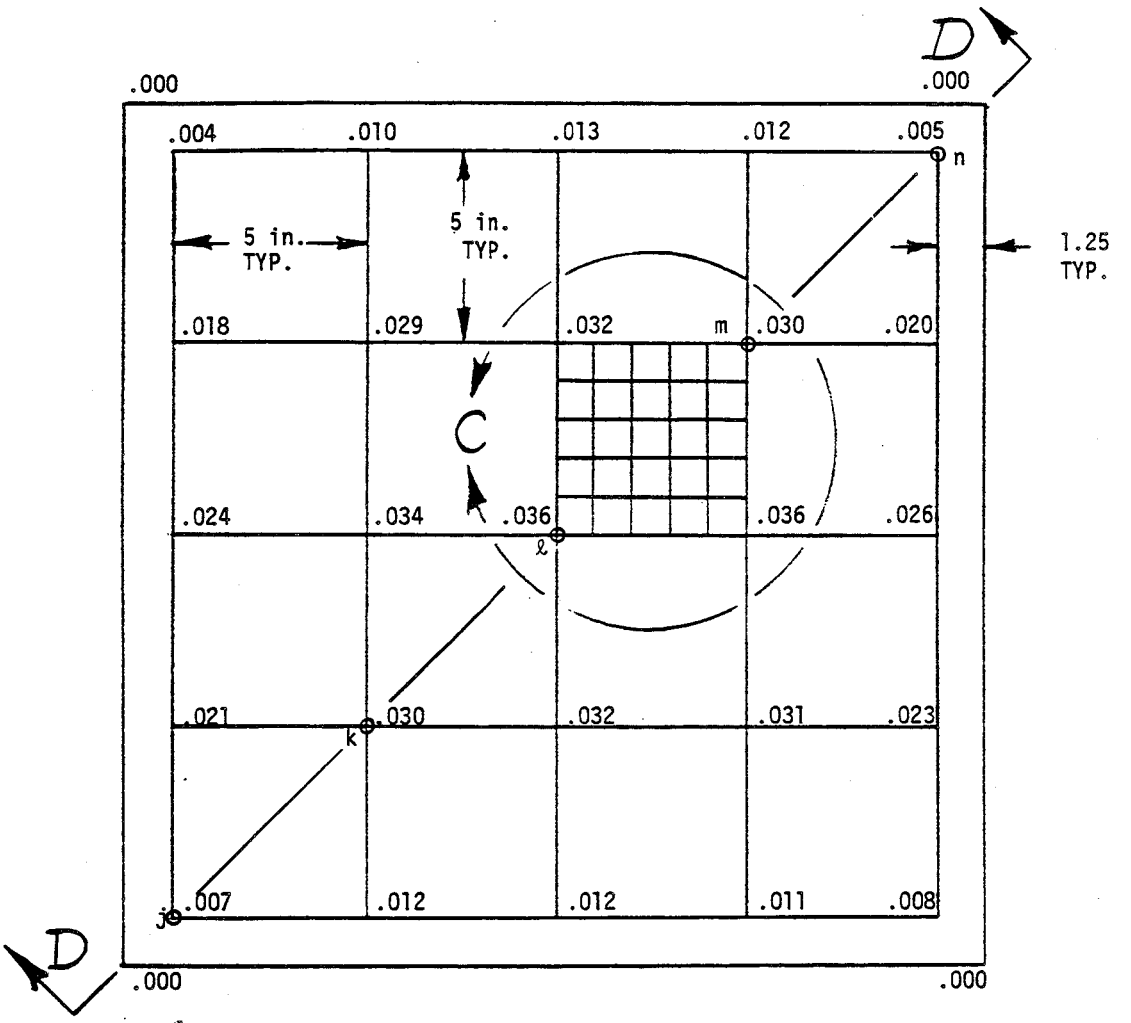

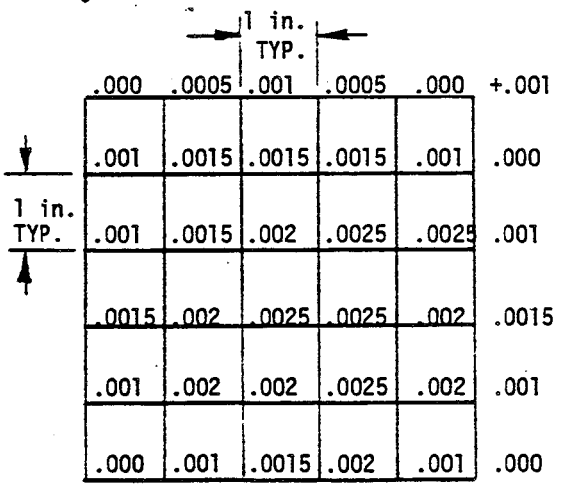

(Dimensions are measured normal to 22-1/2 inch square plane.)

All dimensions in inches

View C (Dimensions are normal to 5 inch square plane)

Figure 20. - Surface flatness inspection results (panel 2 after chem-milling).

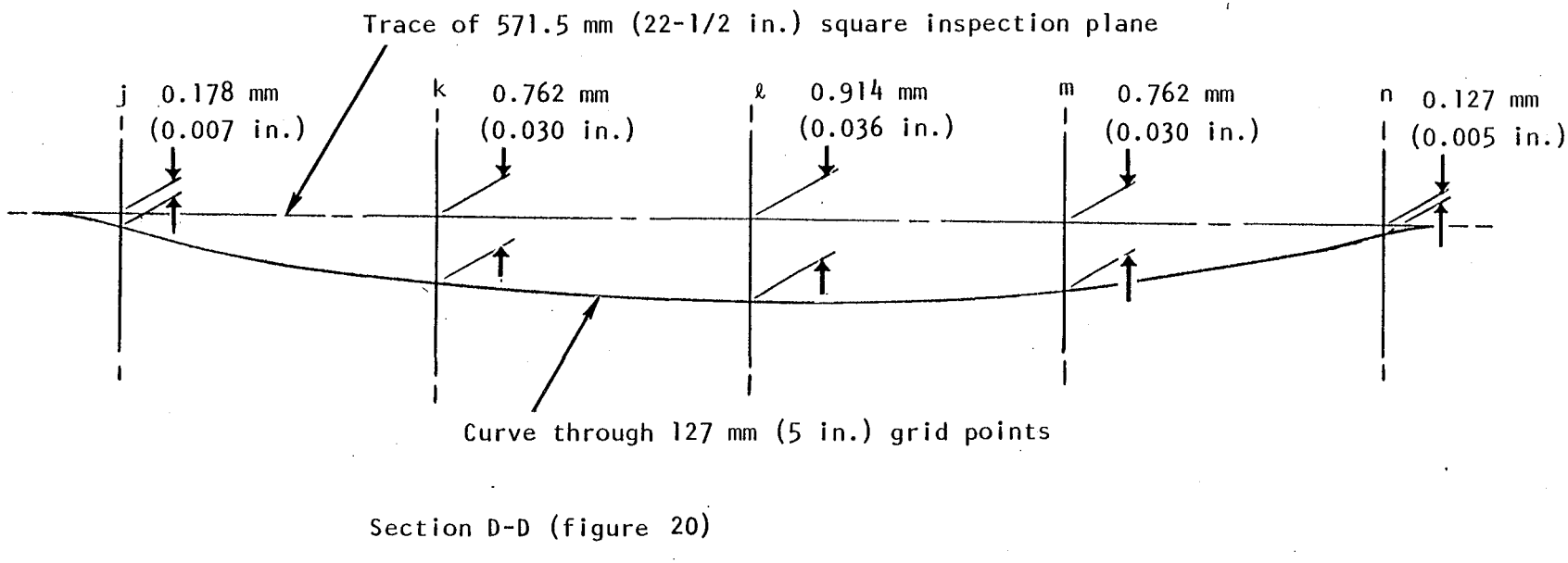

Figure 21. - Section cut through panel upper surface (j. through n.) (panel 2 - after chem-milling).

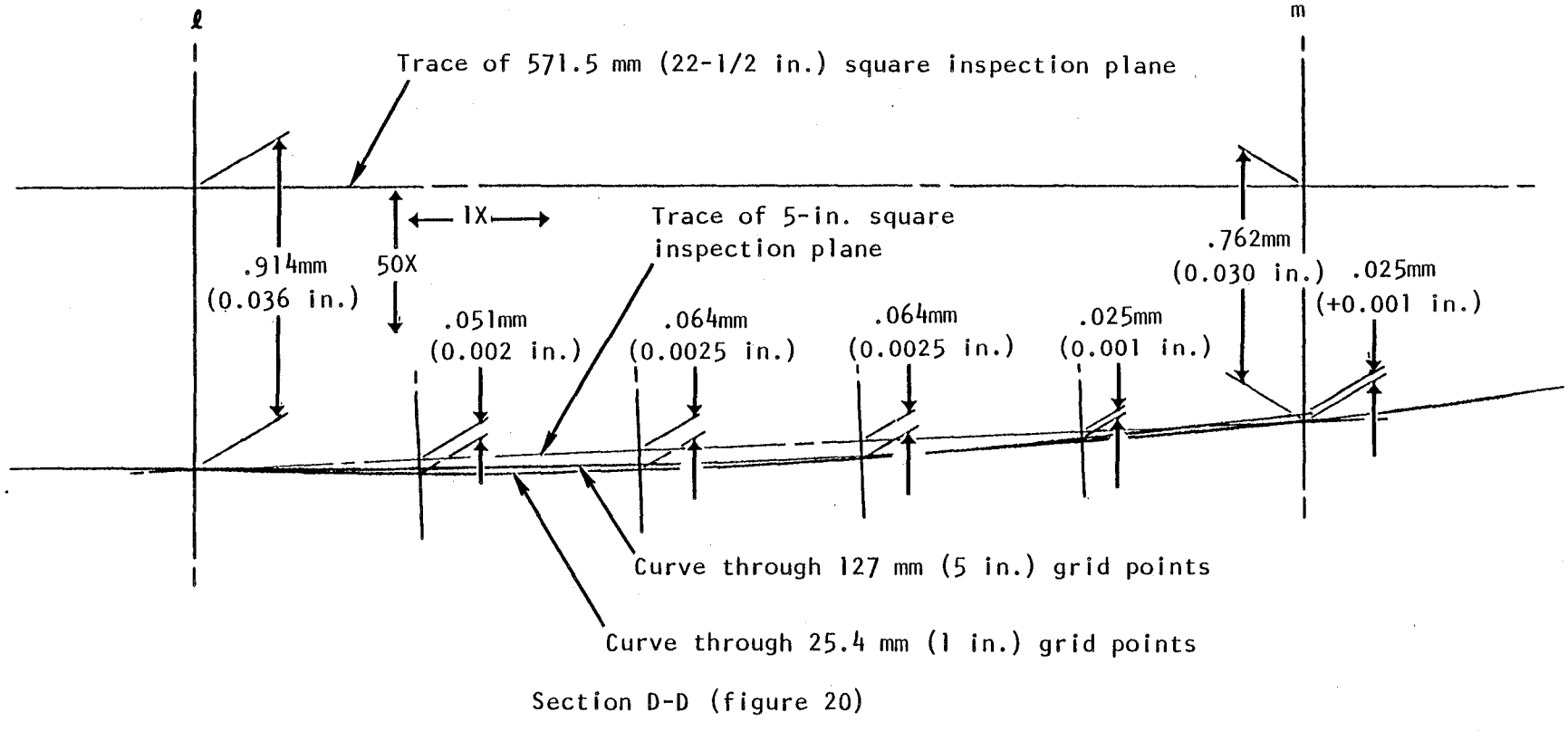

Figure 22. - Section cut through panel upper surface.

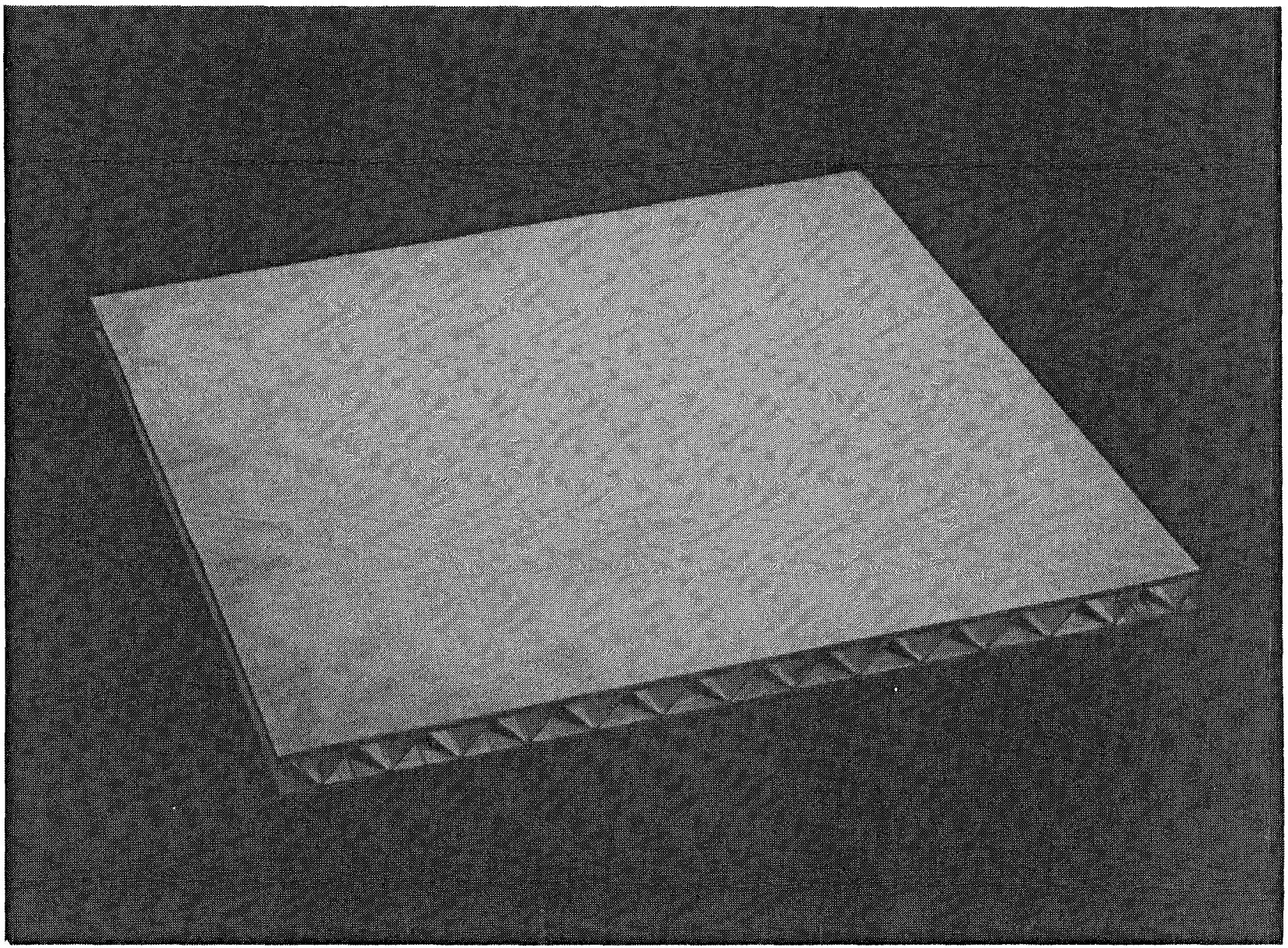

Figure 23. - Flat SPF/DB sandwich panel (panel 2 - after final machining).

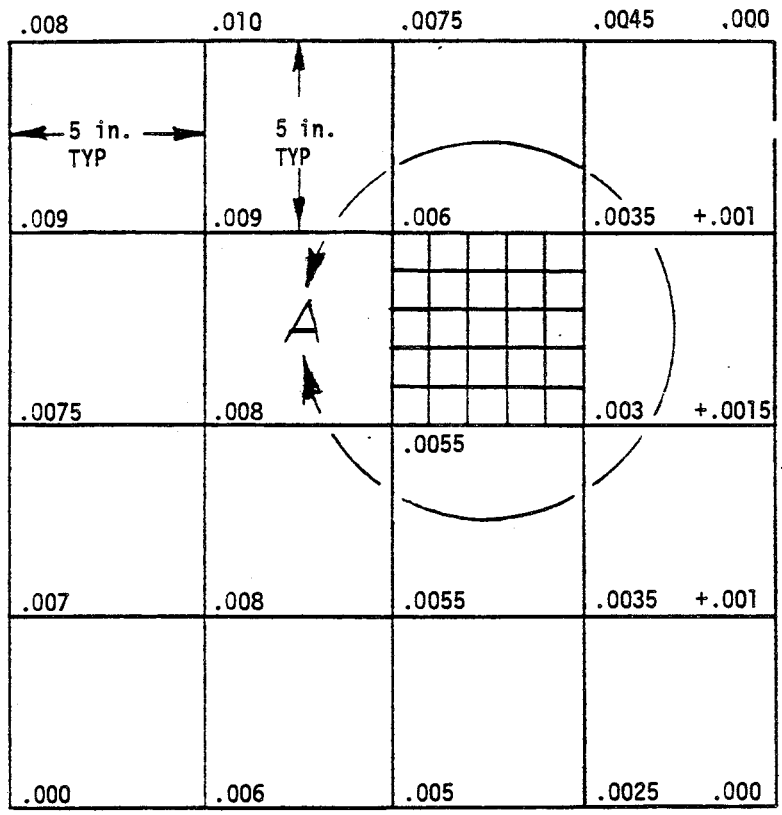

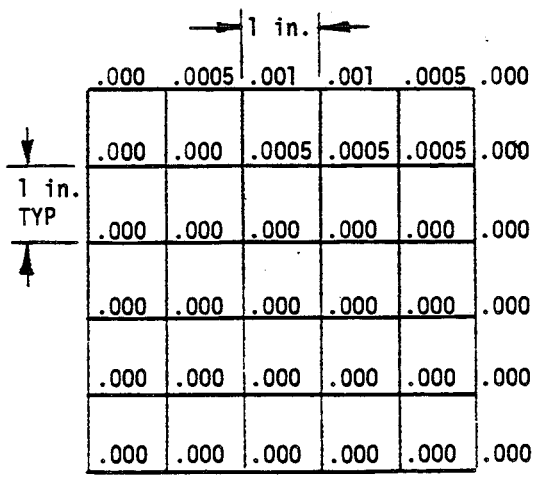

(Dimensions are measured normal to 20 inch square plane and are negative unless noted by a + sign.)

(Dimensions are normal to 5 inch square plane).

All dimensions in inches

Figure 24. - Surface flatness inspection results (panel 2 after final machining).

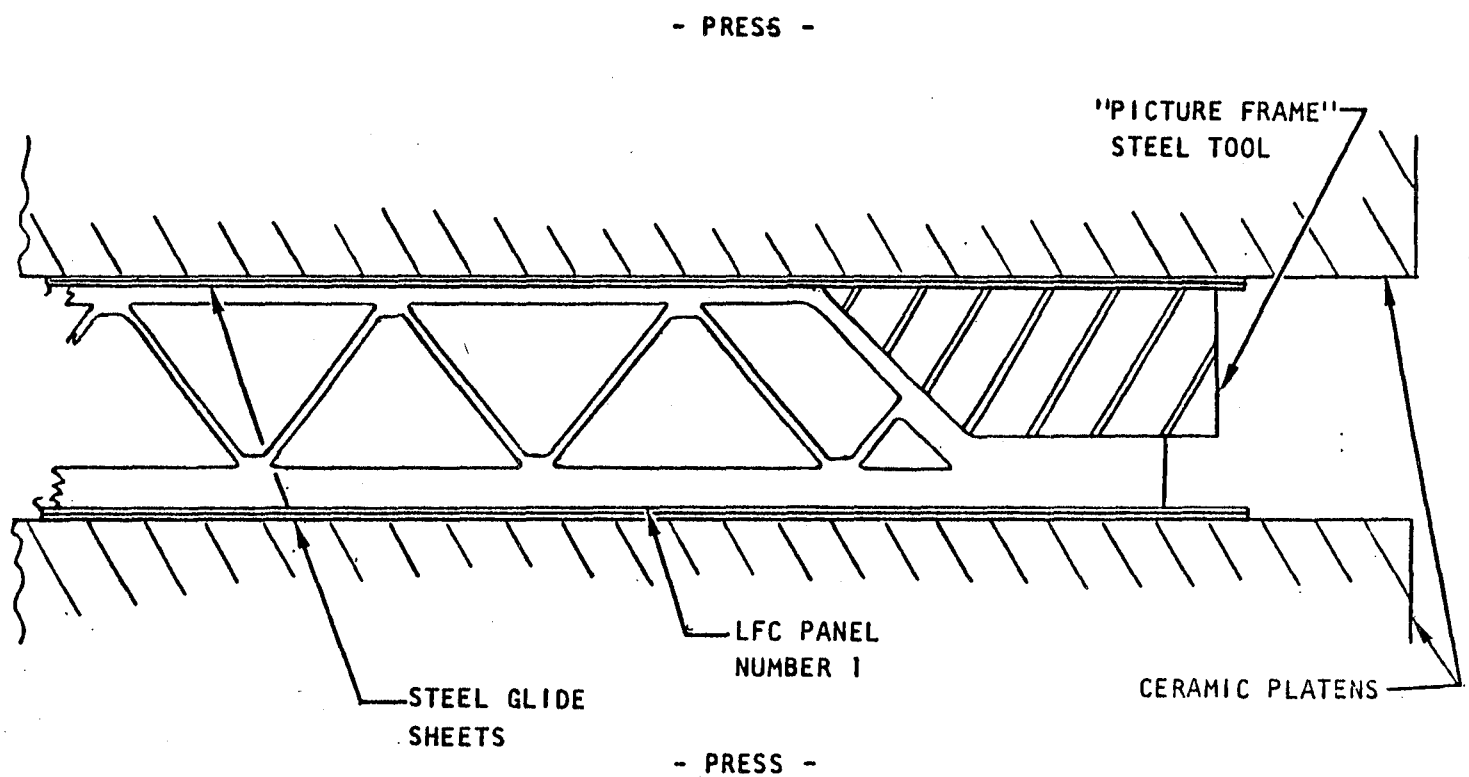

Figure 25. - Revised SPF tooling system (reprocessing LFC panel 1).

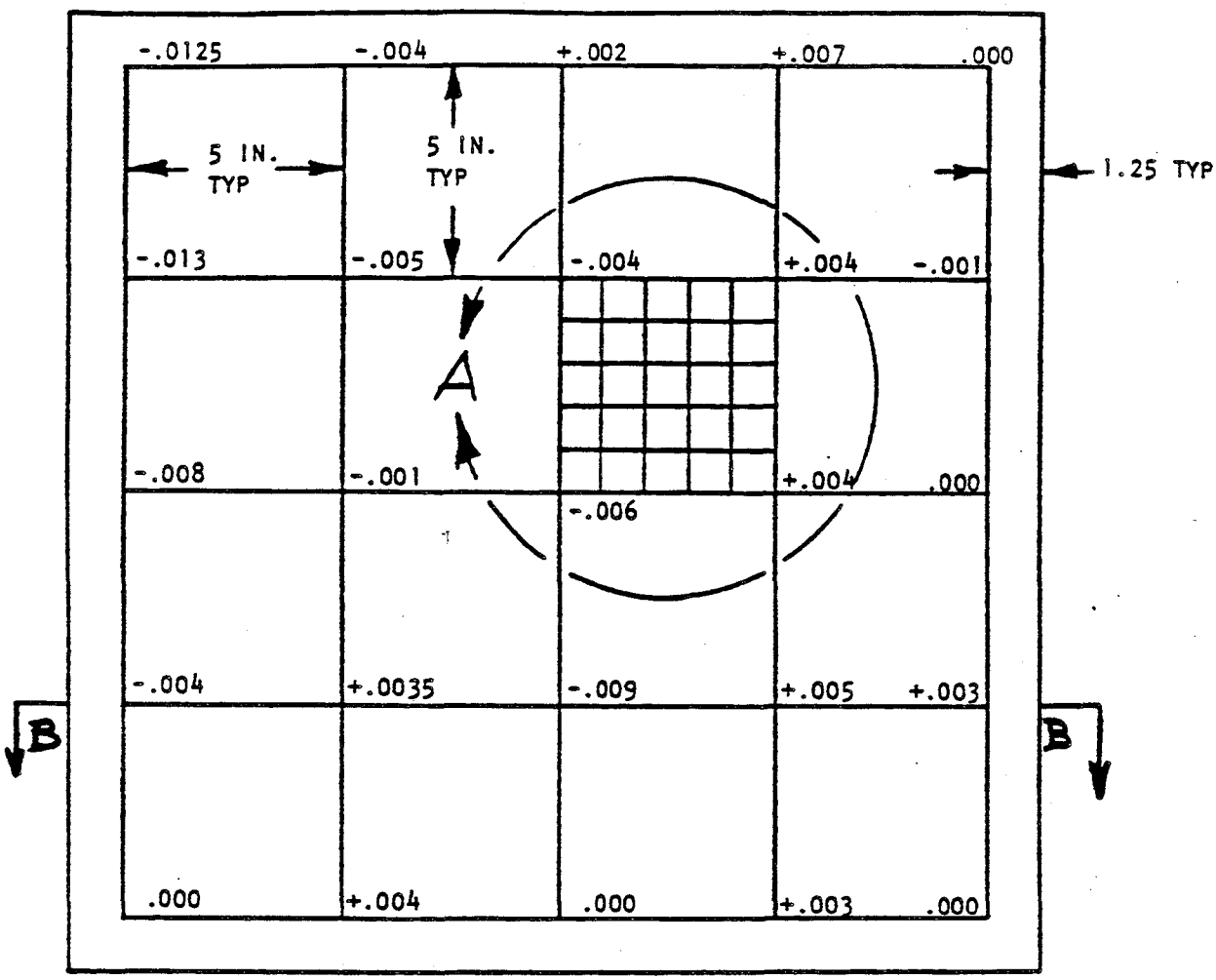

(DIMENSIONS ARE MEASURED NORMAL TO 20 INCH PLANE)

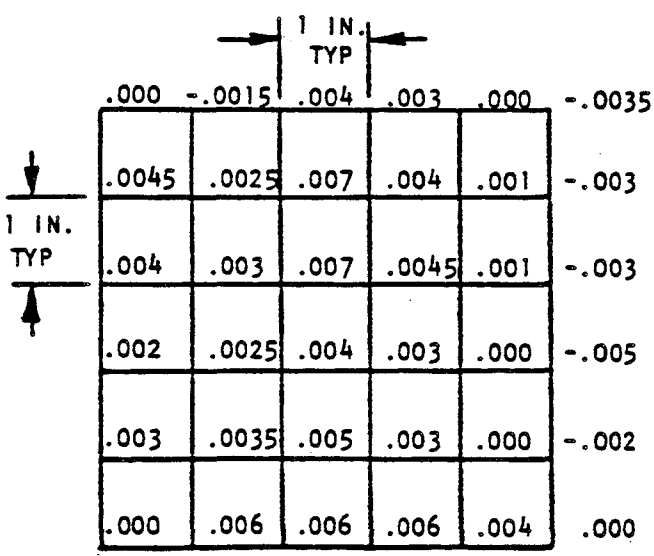

VIEW A (DIMENSIONS ARE NORMAL TO 5 INCH SQUARE PLANE)

Note: All dimensions in inches.

Figure 26. - Surface flatness inspection results (panel 1 after reprocessing).

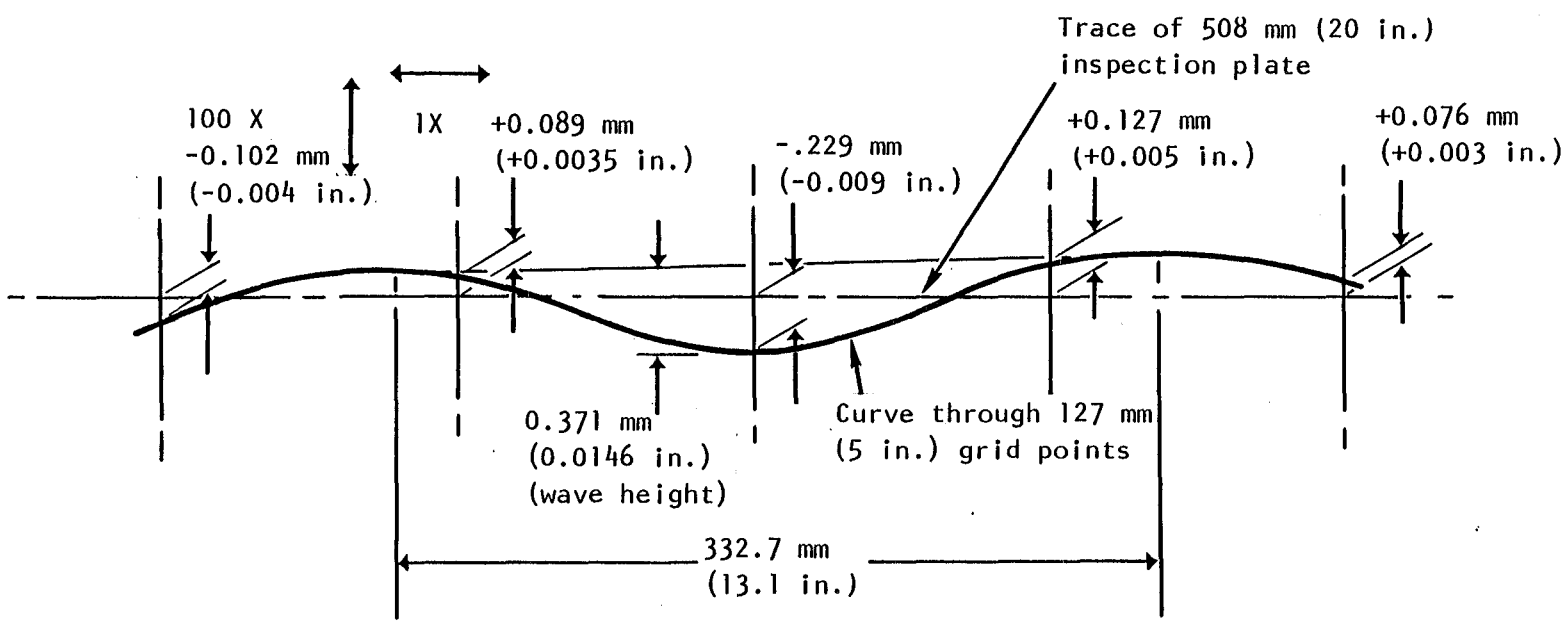

Section B-B (figure 26) (no scale)

Figure 27. - Section cut through panel upper surface (panel 1 - after reprocessing).

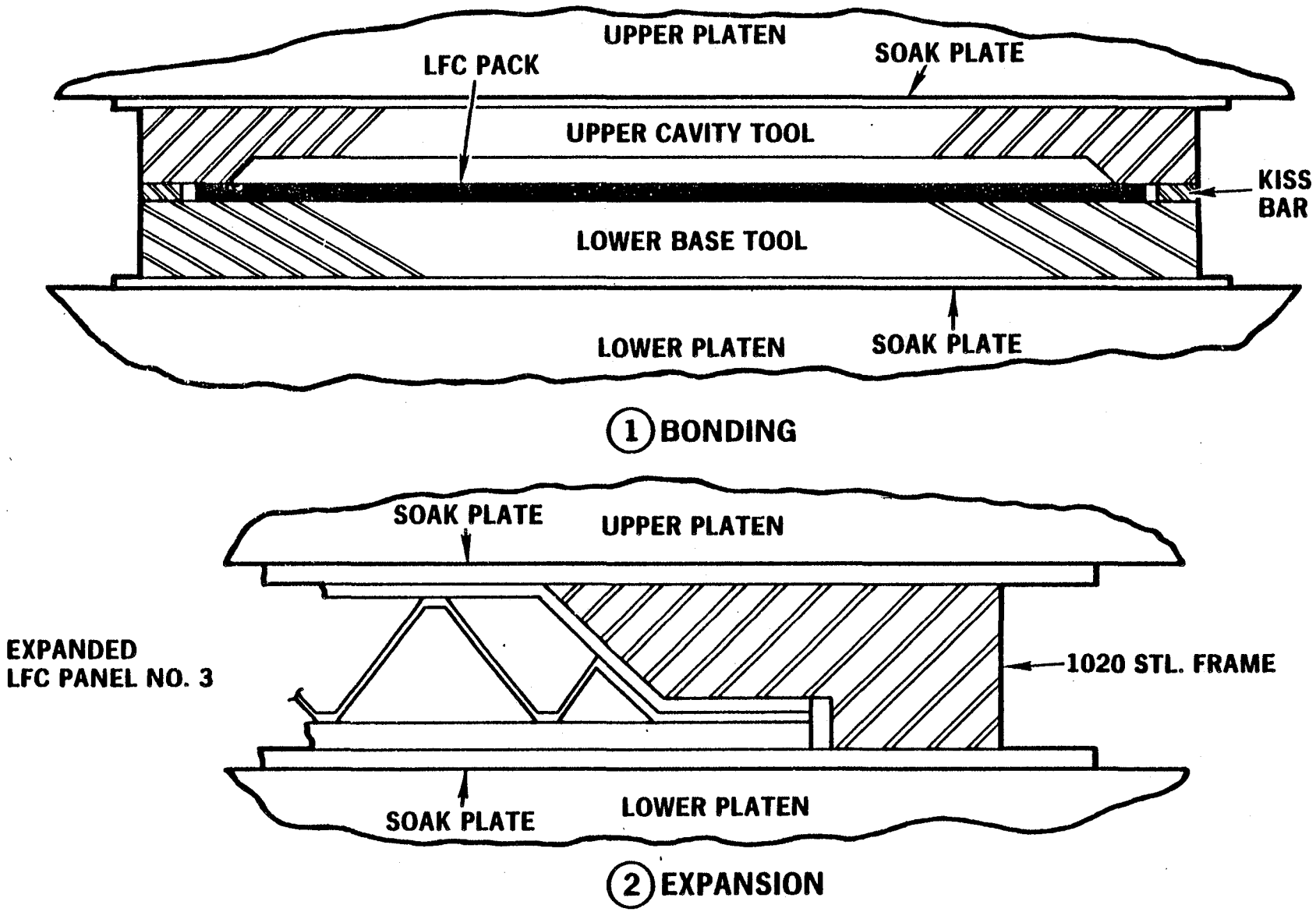

Figure 28. - Fabrication procedure for LFC panel 3.

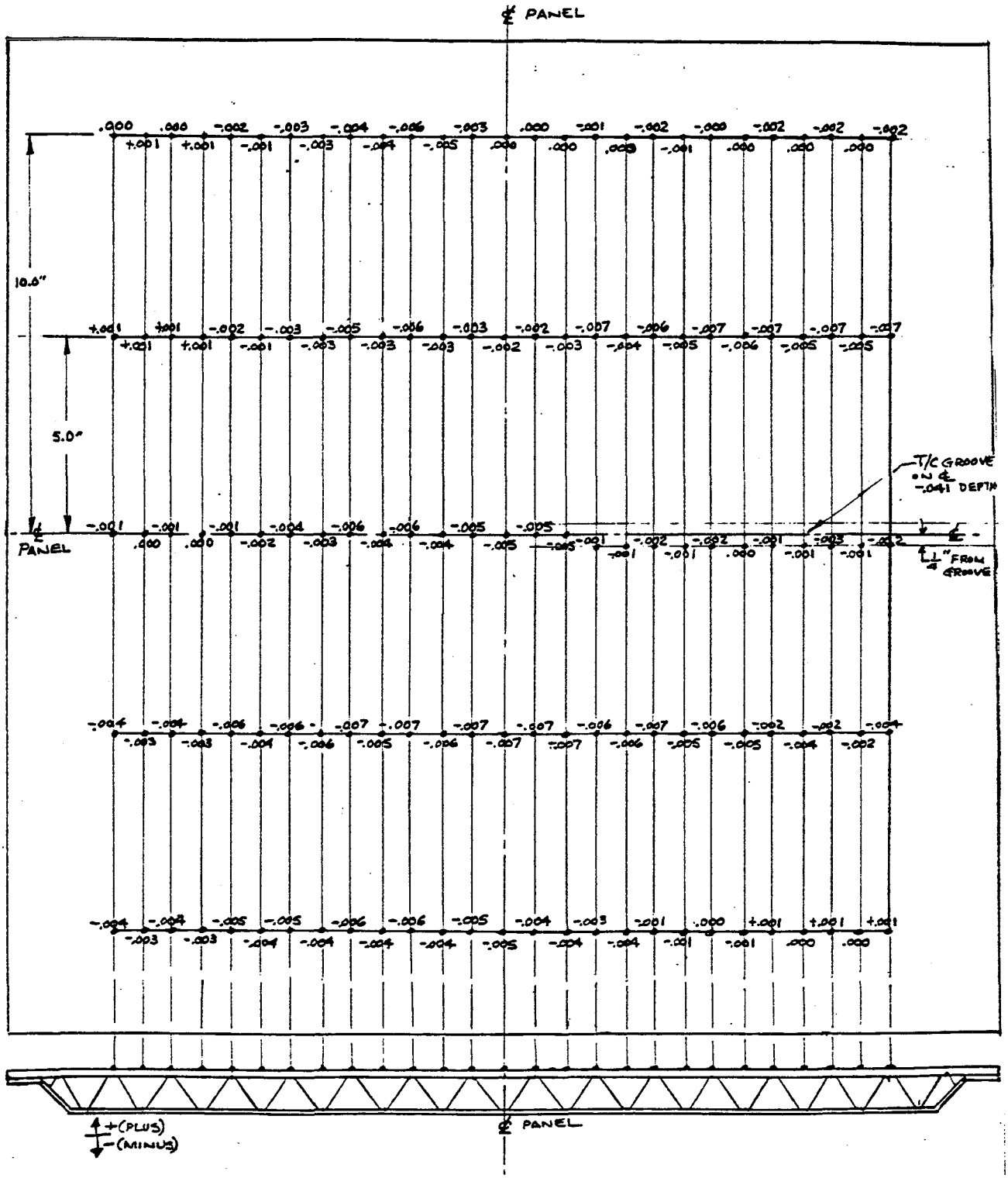

Note: All dimensions in inches.

Figure 29. - LFC panel 4 surface flatness inspection results.

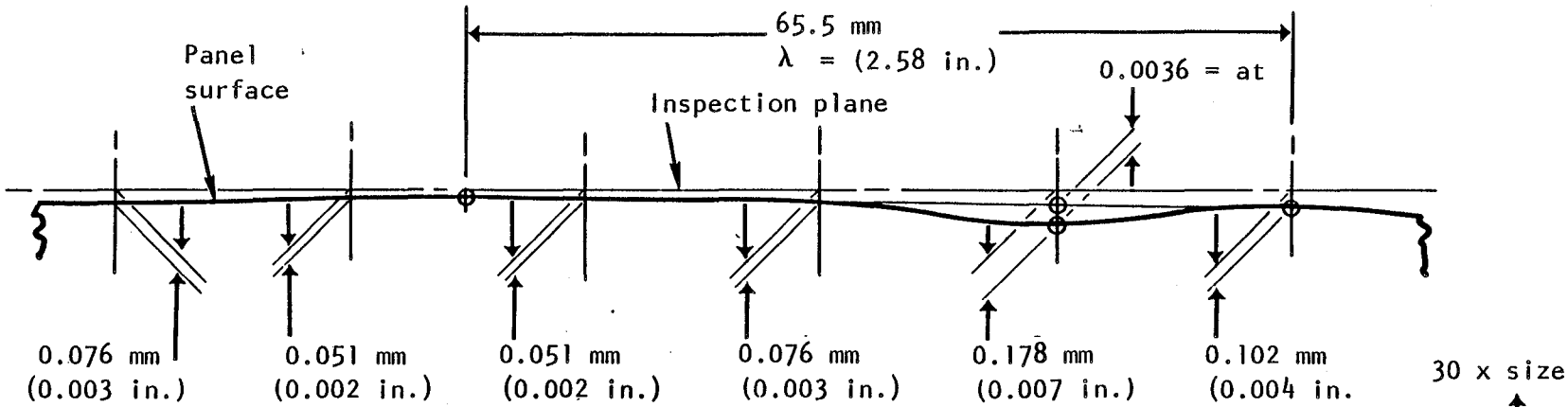

Section A-A (figure 29)

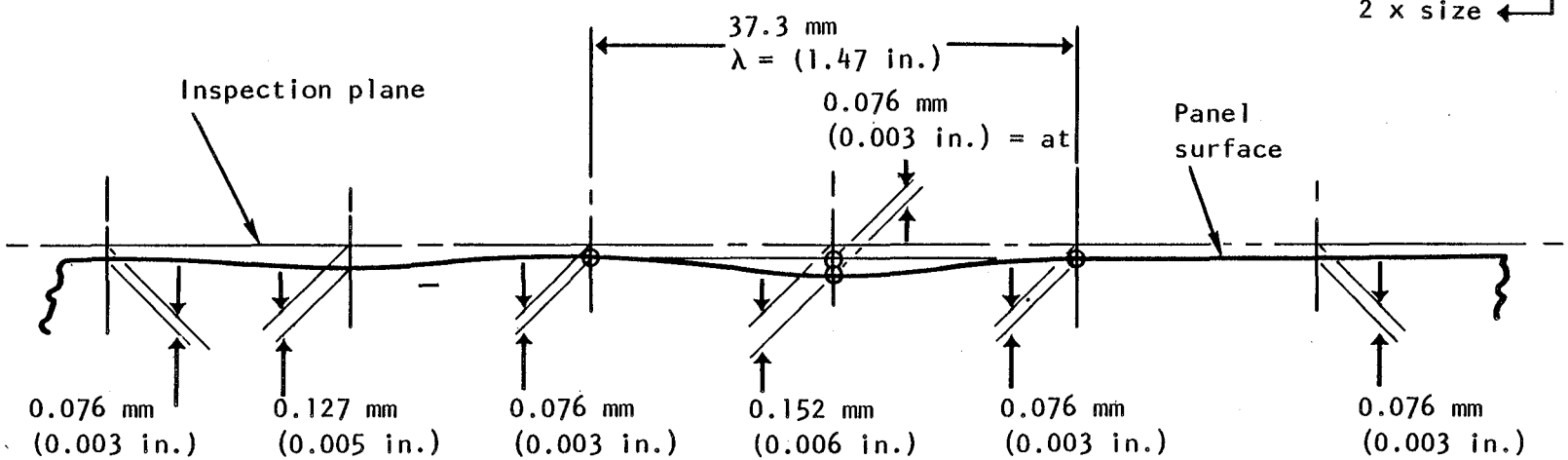

Section B-B (figure 29)

Figure 30. - Sections through panel 4 upper surface - as formed.

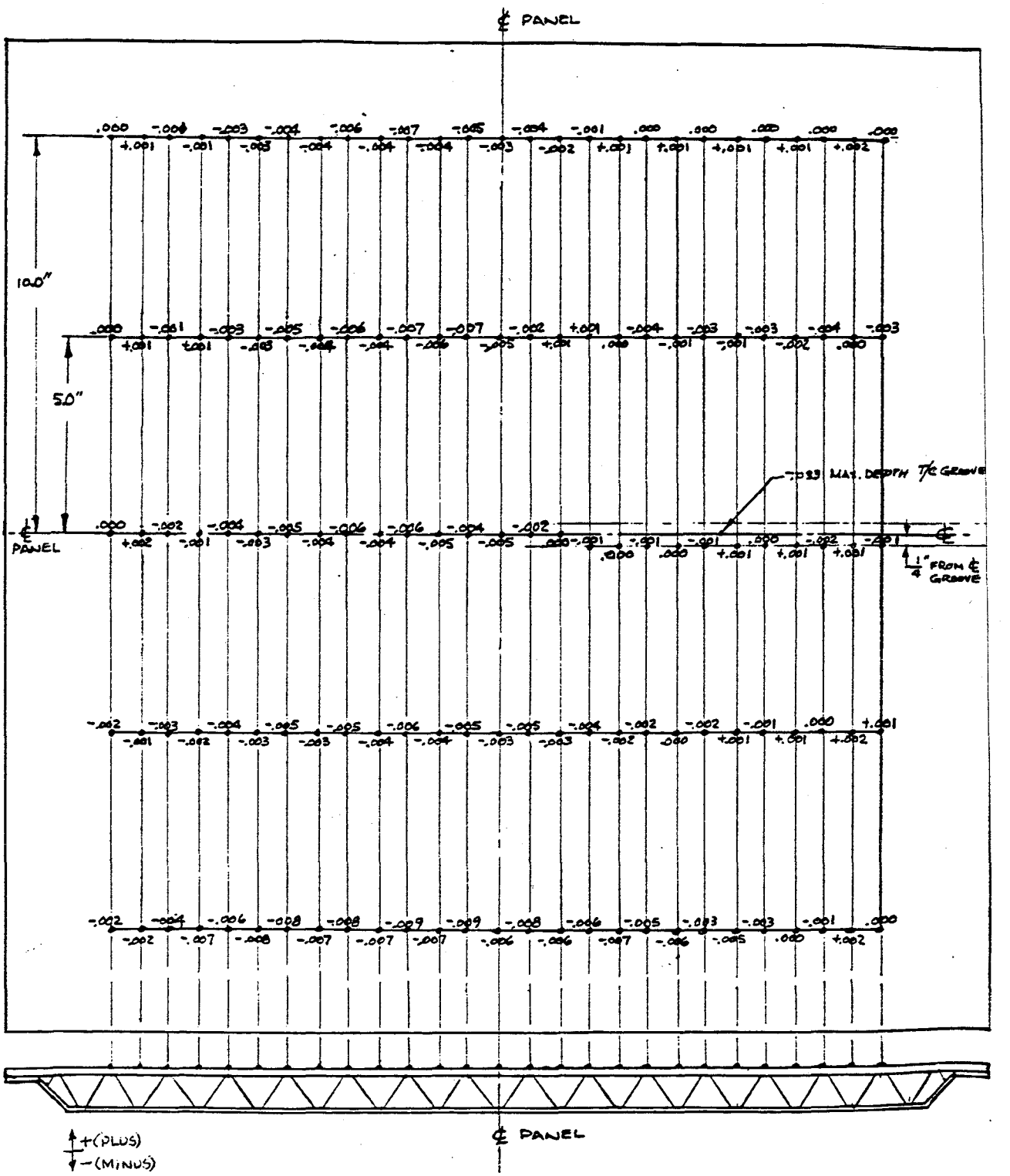

Note: All dimensions in inches.

Figure 31. - LFC panel 4 (after 0.005 removal by CM).

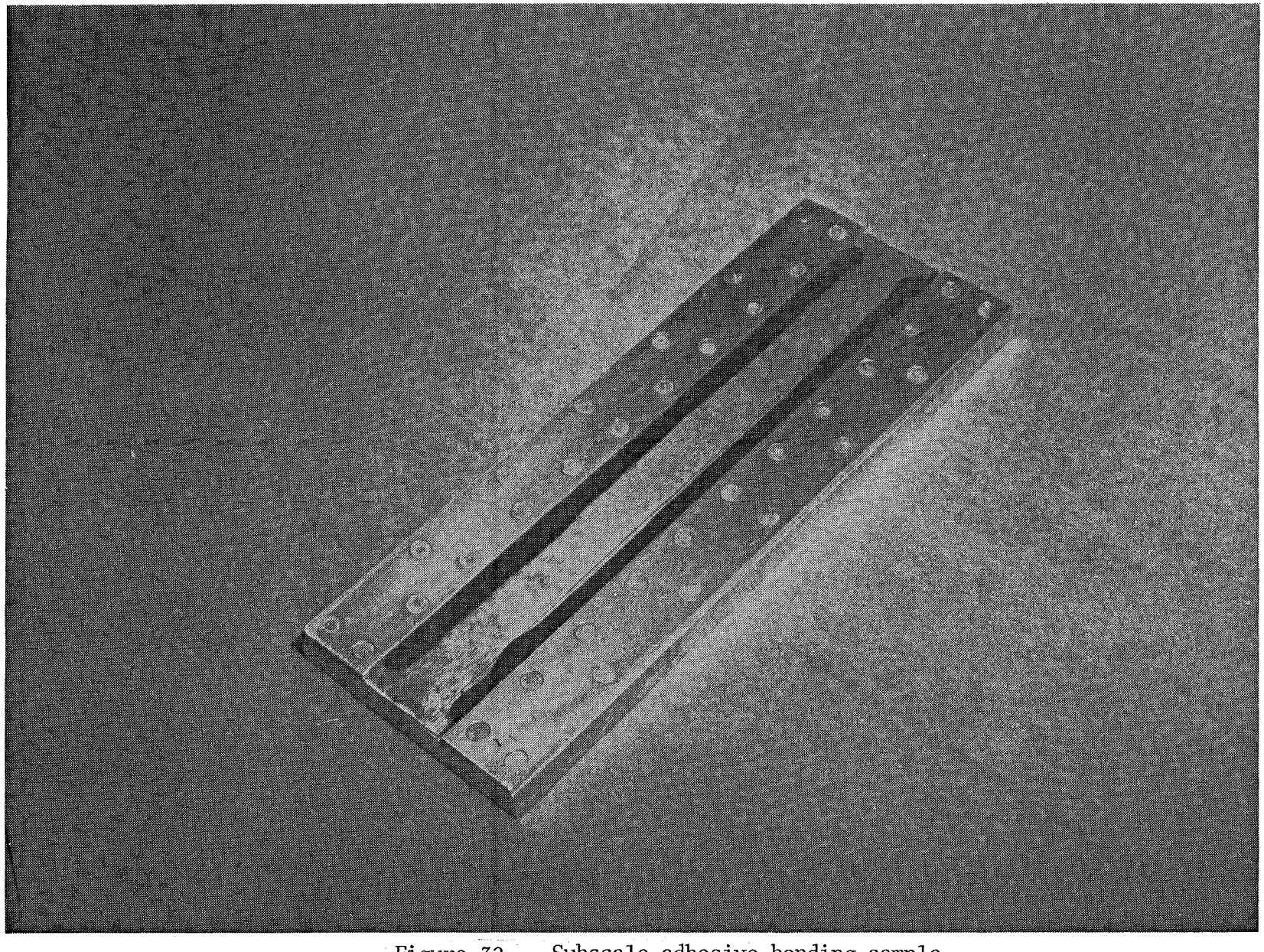

Figure 32. - Subscale adhesive bonding sample.

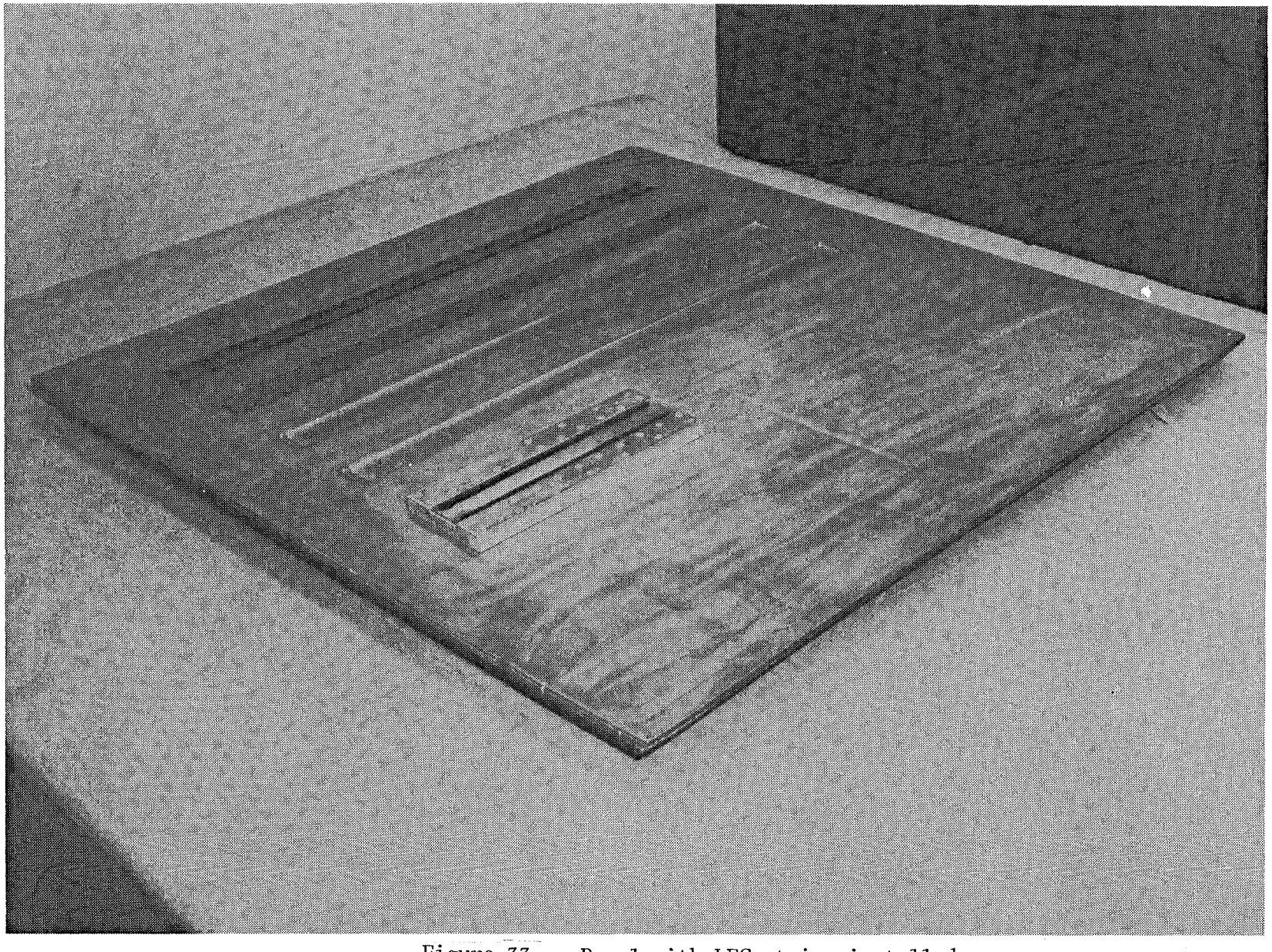

Figure 33. - Panel with LFC strips installed.

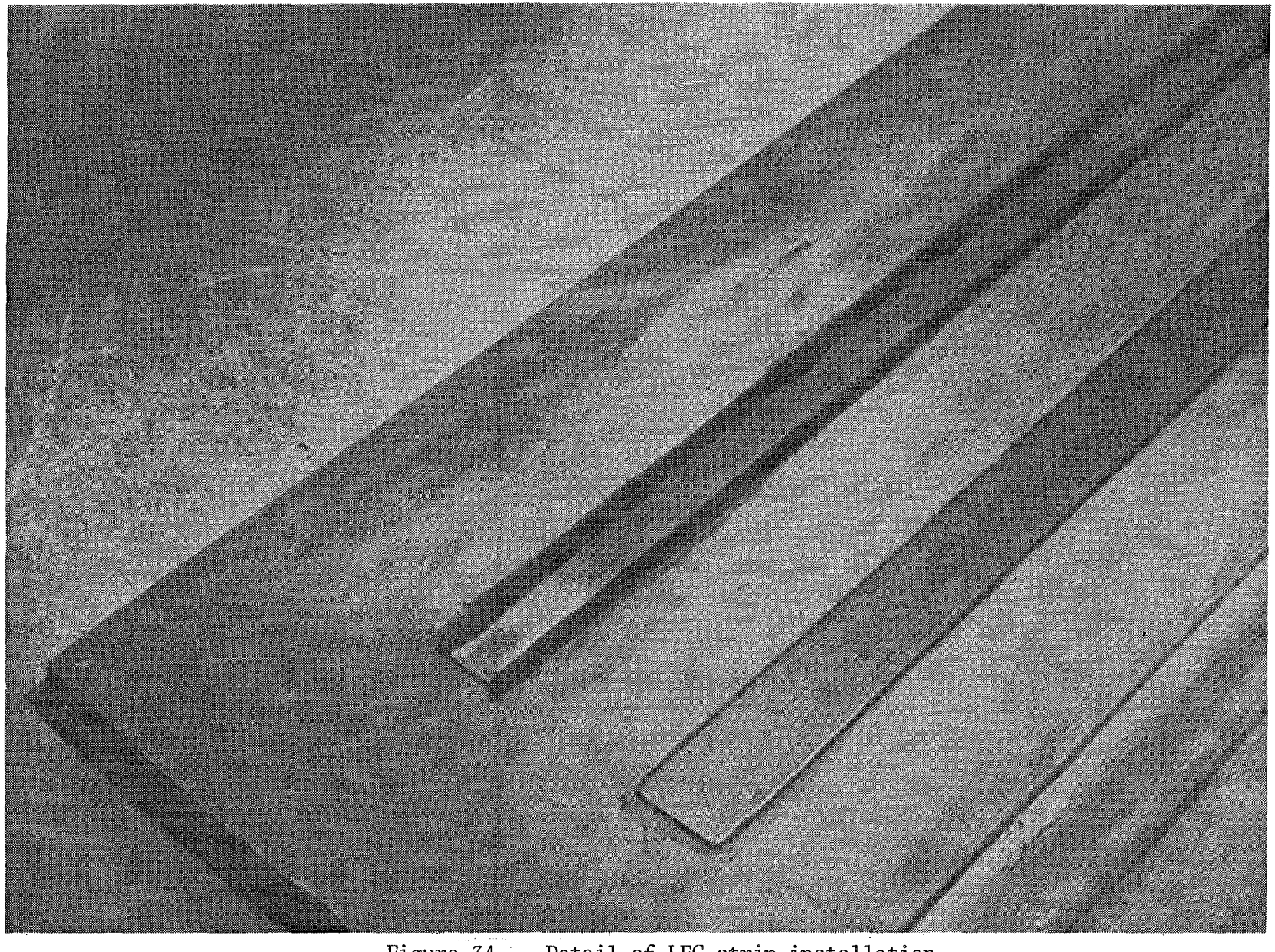

Figure 34. - Detail of LFC strip installation.

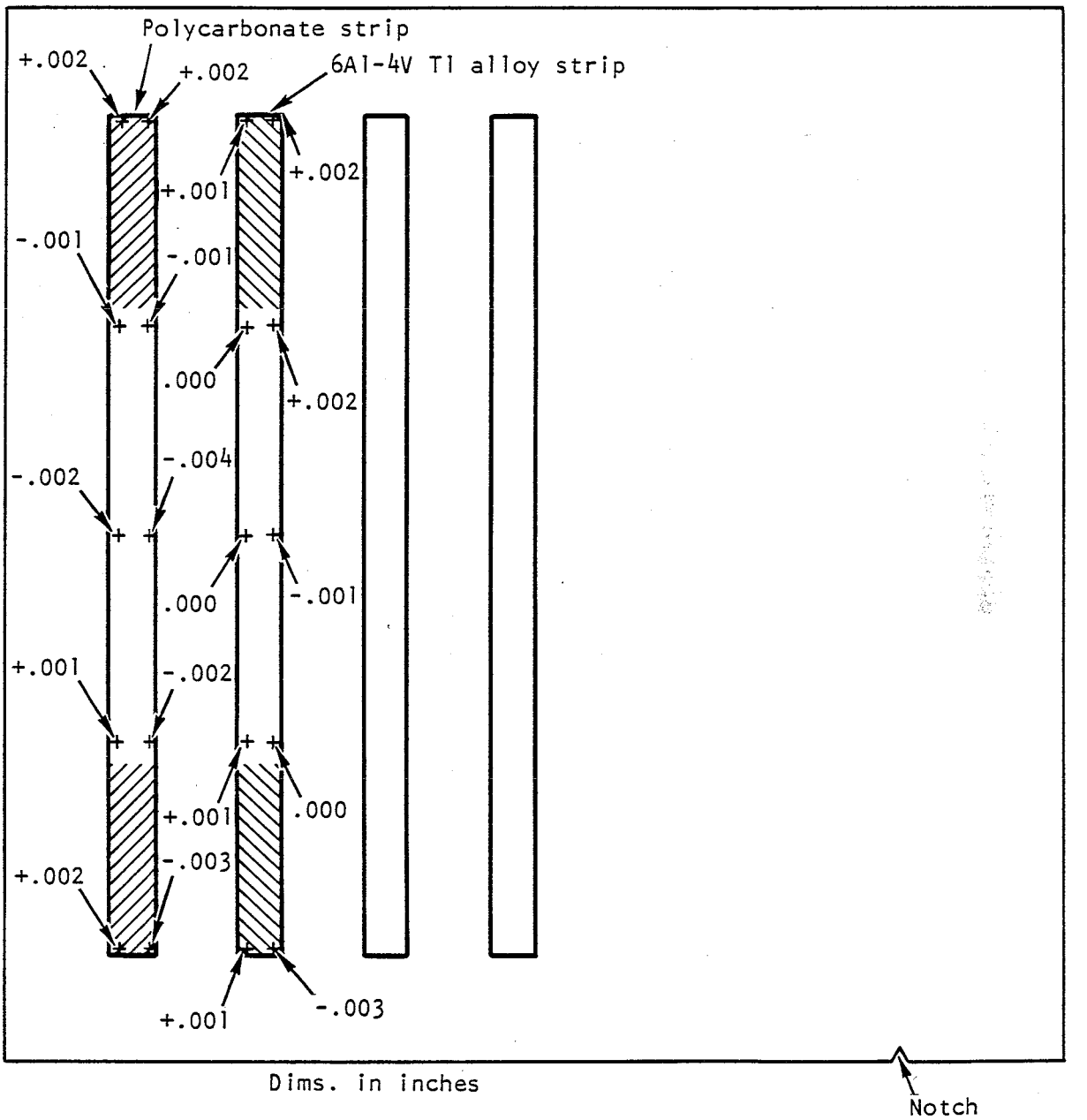

Figure 35. - Dimensional steps between LFC strip and panel surface (+ is above panel surface; - is below panel surface).

TABLE I. - LFC WING LOADS

Wing Station, % semispan	BP		Moment limit		Nx-Ult[a]		V-limit	
	m	(in.)	MN-m	(in.-lb x 10^{-6})	kN/M	lb/in.)	kN	lb x 10^{-3}
0.95	27.05	1065	0.019	(.17)	-142	(-809)	31.14	(7)
.75	21.36	(841)	.54	(4.8)	-1,927	(-11,000)	155.68	(35)
.55	15.67	(617)	1.92	(17)	-4,205	(-24,000)	311.36	(70)
.37	10.52	(414)	4.41	(39)	-6,325	(-35,100)	533.76	(120)
.14	3.99	(157)	8.70	(77)	-4,240	(-24,200)	889.6	(200)
.04	1.14	(44.8)	11.19	(99)	-4,400	(-25,117)	1,112.0	(250)

[a] Negative "Nx" denotes compression load in upper wing surface.

1. Report No.	2. Government Accession No.	3. Recipient's Catalog No.
NASA CR165929		

4. Title and Subtitle	5. Report Date
FEASIBILITY OF SPF/DB TITANIUM SANDWICH FOR LFC WINGS	June 1982
	6. Performing Organization Code
7. Author(s)	8. Performing Organization Report No.
Fred T. McQuilkin	NA-82-314
	10. Work Unit No.
9. Performing Organization Name and Address	
Rockwell International North American Aircraft Operations P.O. Box 92098 Los Angeles, CA 90009	11. Contract or Grant No. NAS1-16236
	13. Type of Report and Period Covered
12. Sponsoring Agency Name and Address	Contractor Report - Final
National Aeronautics and Space Administration Washington, D.C. 20546	14. Sponsoring Agency Code

15. Supplementary Notes

NASA Technical Representative: Daniel B. Snow
Alternate Technical Representative: James W. Cheely

16. Abstract

This program, conducted by the North American Aircraft Operations of Rockwell International for NASA Langley Research Center, has demonstrated the feasibility of fabricating SPF/DB titanium structures of sufficient smoothness to be used for laminar flow wing surfaces.

Two methods of fabricating panels which meet the surface smoothness criteria have been demonstrated. The first consists of superplastically forming/diffusion bonding a panel using steel dies, and then machining the surface to the required flatness and finish after forming. This approach, however, has been estimated to be more costly than the second approach, in which the panel is formed against ceramic platens which produce the desired surface smoothness without subsequent finishing.

The acceptable surface quality as well as feasibility of the Rockwell-developed laminar flow control (LFC) surface design, in which separate strips incorporating the boundary layer bleed provisions are bonded into slots on the surface, has also been demonstrated.

Recommendations for future work are presented, including continued study on additional smoothness concerns, scale-up to larger wing panels, fabrication of separate LFC strips, and the application of the technology to military aircraft.

17. Key Words (Suggested by Author(s))	18. Distribution Statement
Titanium, superplastic forming, diffusion bonding, SPF/DB structures, laminar flow control, boundary layer control, aircraft energy efficiency	UNCLASSIFIED UNLIMITED SUBJECT CATEGORY - 01

19. Security Classif. (of this report)	20. Security Classif. (of this page)	21. No. of Pages	22. Price*
Unclassified	Unclassified		

N-305

For sale by the National Technical Information Service, Springfield, Virginia 22161

End of Document