1. Nick ~~Lance~~ EC3

7. LSI TR-319-4

NASA-CR-167703

2. PREPROTOTYPE INDEPENDENT AIR REVITALIZATION SUBSYSTEM

(NASA-CR-167703) PREPROTOTYPE INDEPENDENT AIR REVITALIZATION SUBSYSTEM Final Report (Life Systems, Inc., Cleveland, Ohio.) 92 p HC A05/MF A01 CSCL 06K

N82-29898

Unclas

G3/54 28623

FINAL REPORT

by

3. F.H. Schubert, T.M. Hallick and R.R. Woods

6. April, 1982

AUG 1982
RECEIVED
NASA STI FACILITY
ACCESS DEPT.

5. Prepared Under Contract NAS9-15218

by

4. *Life Systems, Inc.*
Cleveland, OH 44122

for

LYNDON B. JOHNSON SPACE CENTER
National Aeronautics and Space Administration

TR-319-4

PREPROTOTYPE INDEPENDENT AIR REVITALIZATION SUBSYSTEM

FINAL REPORT

by

F. H. Schubert, T. M. Hallick
and R. R. Woods

April, 1982

Distribution of this report is provided in the interest of information exchange. Responsibility for the contents resides in the authors or organization that prepared it.

Prepared for Contract NAS9-15218

by

LIFE SYSTEMS, INC.
Cleveland, OH 44122

for

LYNDON B. JOHNSON SPACE CENTER
National Aeronautics and Space Administration

FOREWORD

The work described in this report was performed by Life Systems, Inc., to cover a portion of the work completed under Contract NAS9-15218, sponsored by the Lyndon B. Johnson Space Center of the National Aeronautics and Space Administration. The work was performed during the period beginning March, 1977 through December, 1981.

The work was separated into essentially two distinct phases. The first phase covered the period March, 1977 through April, 1980. During this phase of fabrication and testing, an electrical current leakage problem occurred which necessitated refurbishment and modifications to some portions of the IARS hardware. All testing data collected during this period (prior to the IARS overhaul) is referred to as "pre-refurbishment" data in the following report. Testing data collected during the second phase - the period May, 1980 through December, 1981 - is referred to as "post-refurbishment" data.

The Program Manager was Franz H. Schubert. Technical Support was provided by the following individuals:

S. Czernec	Subsystem and TSA fabrication
R. W. Ellacott	Subsystem and TSA fabrication
T. M. Hallick	Subsystem assembly and testing
J. O. Jessup	Subsystem and TSA fabrication
D. W. Johnson	Subsystem and TSA fabrication
E. P. Koszenski	Project Administrator
R. D. Marshall	Subsystem Design
J. D. Powell, II	Electrical Engineering
J. D. Powell, III	Computer Software
R. R. Woods	Electrochemistry, Subsystem assembly and testing

The contract's Technical Monitor was Nick Lance, Jr., Lyndon B. Johnson Space Center, National Aeronautics and Space Administration.

TABLE OF CONTENTS

	PAGE
LIST OF FIGURES	iii
LIST OF TABLES	iv
LIST OF ACRONYMS	v
SUMMARY	1
PROGRAM ACCOMPLISHMENTS	3
INTRODUCTION	4
Background	4
Program Objectives	5
Program Organization	5
INDEPENDENT AIR REVITALIZATION SUBSYSTEM	5
Concept Description	6
Electrochemical Carbon Dioxide Concentration	6
Water Vapor Electrolysis	6
Power Sharing Controller	10
Design Specifications	10
Design Requirements	13
Packaging Constraints	13
Maintenance Considerations	13
Interface Specifications	13
Subsystem Operation	13
Subsystem Sizing	17
Design Curves	17
Module Sizing	17
Heat and Mass Balance	21
Mechanical Hardware Description	21
Component Descriptions	21
Packaging	21
Control/Monitor Instrumentation	30
Instrumentation Design	30
Hardware Description	38
Software Description	45

continued-

Table of Contents - continued

	PAGE
PRODUCT ASSURANCE PROGRAM	45
Quality Assurance	45
Reliability	48
Maintainability	48
Safety	50
Materials Control	50
TEST SUPPORT ACCESSORIES	52
Fluid Interface Simulation	52
Electrical Interface Simulation	52
Parametric Data Display	52
Data Acquisition System	54
TEST PROGRAM	54
Checkout/Calibration Test	54
Pre-Refurbishment	62
Post-Refurbishment	62
Shakedown Test	62
Parametric/Endurance Test	63
Carbon Dioxide Partial Pressure Test	63
Inlet Relative Humidity Test	63
Low RH Test	68
Baseline/Endurance Testing	68
Derated Test	73
Acceptance Test	74
MATH MODEL DEVELOPMENT	74
Program Description	74
Model Results	77
CONCLUSIONS	77
RECOMMENDATIONS	77
REFERENCES	80
APPENDIX 1 DUCT, CURRENT TAB AND END PLATE IMPROVEMENTS	83

LIST OF FIGURES

FIGURE		PAGE
1	Independent Air Revitalization Subsytem Concept	7
2	EDC Functional Schematic with Reactions	8
3	WVE Functional Schematic with Reactions	9
4	Detailed Block Diagram of Power-Sharing Controller	11
5	IARS Design Packaging Envelope for RLSE	15
6	EDCM Design Curve: CO_2 Removal Efficiency and Cell Voltage Versus Current Density	18
7	WVEM Design Curve: Average Cell Voltage Versus Current Density	19
8	EDCM Design Curve: Optimum EDC Current Density	20
9	Process Stream Operating Parameters	23
10	Preprototype IARS Schematic	25
11	IARS Mechanical Hardware (Front View of Initial Design)	28
12	IARS Mechanical Hardware (Rear View of Initial Design)	29
13	IARS Layout	31
14	IARS Modes and Allowable Mode Transition	33
15	C/M I Hardware Block Diagram	43
16	C/M I Operator/Subsystem Front Panel	44
17	C/M I Enclosure (Rear View)	46
18	C/M I Software Block Diagram	47
19	FMEA Example	49
20	Materials List Example	51
21	Preprototype IARS Fluid Interface TSA Schematic	53
22	Summary of IARS Operating Times (Pre-Refurbishment)	56
23	IARS Photograph After Ducting Modifications	58
24	Summary of IARS Operating Times (Post-Refurbishment)	61
25	Effect of Process Air pCO_2 on EDCM Performance	65
26	WVEM and EDCM Performances at Various RH Levels (Post-Refurbishment)	67
27	IARS EDCM Performance	69
28	IARS WVEM Performance	70
29	Computer Model Structure	78

LIST OF TABLES

TABLE		PAGE
1	Independent Air Revitalization Subsystem Operation Comparison, Pre- and Post-Refurbishment	2
2	IARS Design Specifications	12
3	IARS Design Requirements	14
4	IARS Design Interfaces	16
5	IARS Module Design Operating Characteristics	22
6	IARS Mechanical Subsystem Design Goals	24
7	Preprototype IARS Parts List	26
8	IARS Mechanical Design Components Weight, Power and Heat Rejection	27
9	IARS Control/Monitor Instrumentation Design Characteristics	32
10	Mode Definitions	34
11	Design Actuator Conditions for IARS Operating Modes	36
12	IARS Normal Mode Control Definition	37
13	IARS Sensor List	39
14	IARS Parametric Display List - Second Page	40
15	IARS Control/Monitor Instrumentation Design Component Size, Weight and Power Summary	41
16	Parametric Test Instrumentation	55
17	Pre-Refurbishment Modifications	57
18	IARS Refurbishment	59
19	Baseline Operating Conditions	64
20	IARS Shutdown Summary	71
21	IARS Performance Summary	72
22	IARS Math Model Program Description	75
23	Math Model Prediction Results	78

LIST OF ACRONYMS

A/D	Analog/Digital
ASU	Air Supply Unit
C/M I	Control/Monitor Instrumentation
CPU	Central Processing Unit
CRS	CO_2 Reduction Subsystem
CRT	Cathode Ray Tube
CS-3	Preprototype Electrochemical CO_2 Concentrating Subsystem
DAS	Data Acquisition System
EDC	Electrochemical Depolarized (Carbon Dioxide) Concentrator
EDCM	EDC Module
FMEA	Failure Modes and Effects Analysis
IARS	Independent Air Revitalization Subsystem
LRU	Line Replaceable Unit
RH	Relative Humidity
RLSE	Regenerative Life Support Evaluation
RTE	Real-Time Executive
S-CRS	Sabatier CO_2 Reduction Subsystem
SSP	Space Station Prototype
TI	Transfer Index
TSA	Test Support Accessories
VDC	Vapor Compression Distillation
WVE	Water Vapor Electrolysis
WVEM	WVE Module

SUMMARY

A program to evaluate the performance and maturity of a preprototype, three-person capacity, automatically controlled and monitored, self-contained Independent Air Revitalization Subsystem was successfully completed at Life Systems. The Independent Air Revitalization Subsystem consists of a Water Vapor Electrolysis Module to generate oxygen from water vapor in the cabin air, an Electrochemical Depolarized Carbon Dioxide Concentrator Module to remove metabolically produced carbon dioxide from the cabin air, and Control and Monitor Instrumentation. The Control and Monitor Instrumentation provides automatic, one-step startup and mode transition sequencing, ancillary component monitoring and control, and shutdown protection for the subsystem. The Control and Monitor Instrumentation also integrates a power sharing controller into the computer- based electronics package. This controller partially offsets the Water Vapor Electrolysis Module power requirement by direct utilization of the power generated by the Electrochemical Depolarized Concentrator Module.

The subsystem was designed to meet the three-person metabolic oxygen generation and carbon dioxide removal requirements. It maintains the cabin partial pressure of oxygen at 22 kPa (3.2 psia) and that of carbon dioxide at 400 Pa (3 mm Hg) over a wide range of cabin air relative humidity conditions. Consumption of water vapor by the Water Vapor Electrolysis Module also provides partial humidity control of the cabin environment.

Several advanced concepts were incorporated into the design of the three-person Independent Air Revitalization Subsystem. The major features incorporated were (1) high performance water vapor electrolysis anodes, (2) a 0.046 m^2 (0.5 ft^2) cell frame design, (3) computer-based control and monitoring instrumentation, (4) a one-step automatic subsystem control concept that included ancillary component monitoring and automatic protection features, (5) a single blower for both process and cooling air, (6) polysulfone glass reinforced end plate design for the electrochemical modules and (7) the power sharing concept at the three-person capacity level.

The subsystem evaluation was accomplished through a parametric/endurance test program of 195 days of subsystem operation (95 days in the normal mode). The nominal baseline operating conditions for the parametric/endurance testing were a carbon dioxide partial pressure of 400 Pa (3 mm Hg) and a relative humidity range of 50-60%. During operation at three-person capacity, the average carbon dioxide removal efficiency at baseline conditions remained constant throughout the test at 84%. The average electrochemical depolarized concentrator cell voltage at the end of the parametric/endurance test was 0.41 V, representing a very slowly decreasing average cell voltage (at 19 μV/h). The average water vapor electrolysis cell voltage increased only at a rate of 20 μV/h from the initial level of 1.67 V to the final level of 1.69 V at conclusion of the testing.

Comparison of the Pre- and Post-Refurbishment average performance is shown in Table 1. The utilization of the high performance water vapor electrolysis anode resulted in the reduction of spacecraft power requirement by 13% and heat rejection requirements by 26% from the performance obtained during prior

TABLE 1 INDEPENDENT AIR REVITALIZATION SUBSYSTEM OPERATION COMPARISON, PRE- AND POST-REFURBISHMENT

	Pre-Refurbishment	Post-Reburbishment
EDCM		
CO_2 Removal Efficiency, %	82	84
Transfer Index	2.25	2.31
Average Cell Voltage, V	0.38	0.41
Average Voltage Change During Operation, μV/h[a]	52	19
Normal Operation Time, h	1,251	1,040
WVEM		
Average Cell Voltage, V	1.72	1.69
Average Voltage Change During Operation, μV/h[a]	62	20
Normal Operation Time, h	1,261	1,042

(a) Over normal operating time listed.

testing by Life Systems of a one-person Electrochemical Air Revitalization Subsystem. The data showed that the Independent Air Revitalization Subsystem met the nominal three-person carbon dioxide removal and oxygen generation rate of 3.0 kg/d (6.6 lb/d) and 2.5 kg/d (5.5 lb/d), respectively, over a relative humidity range of 50 to 66%.

The power sharing feature of the Control and Monitor Instrumentation developed by Life Systems was demonstrated at the three person capacity level. The power sharing concept successfully controlled water vapor electrolysis and Electrochemical Depolarized Concentrator cell currents and fully utilized Electrochemical Depolarized Concentrator power generated to reduce the spacecraft power requirements for the modules by 81.6 W or 8%. This power reduction corresponds to equivalent weight savings of 38.1 kg (83.8 lb) assuming a power penalty of 0.27 kg/W (0.59 lb/W), a power conversion efficiency of 86.6% and a heat rejection penalty of 0.20 kg/W (0.44 lb/W). The Electrochemical Depolarized Concentrator power would otherwise be rejected as heat to the cabin air. The maturity of the computer-based Control and Monitor Instrumentation was demonstrated with the automatic control, monitoring and protection of a complex electrochemical subsystem.

The Independent Air Revitalization Subsystem technology readiness has been demonstrated at the preprototype level and provides a sound base for prototype system design. Continued development is recommended in which the operational experience gained on Life Systems' preprototype subsystem is applied to advance the maturity of the technology to flight readiness.

PROGRAM ACCOMPLISHMENTS

- Total of 195 days of subsystem operation completed.
  - 87 days in three-person Normal Mode.
  - 8 days in one-person Derated Mode.
  - 100 days in Shutdown Mode (Control/Monitor Instrumentation (C/M I) operating).
  - 0.2 days in Purge Mode.

- Successfully scaled-up Independent Air Revitalization Subsystem concept - from one-person to three-person level.

- Power-sharing demonstrated at three-person subsystem level as an effective method of reducing subsystem equivalent weight - by 38 kg (84 lb).

- Successfully designed, fabricated and tested a fully automated three-person capacity subsystem - demonstrated both one step start, automatic transition sequence control and automatic subsystem monitoring and protection.

- Subsystem performance was characterized - as a function of inlet carbon dioxide partial pressure from 133 Pa (1 mm Hg) to 800 Pa (6 mm Hg) and inlet relative humidities of 35-40%, 54% and 60%.

- Successfully incorporated single blower concept at three-person subsystem level - reducing subsystem complexity.

- Operated 24-cell Water Vapor Electrolysis Module for 2,313 h and successfully incorporated the advanced Water Vapor Electrolysis anodes.
  - Final average cell voltage of 1.69 V at 48 mA/cm^2 (45 ASF).

- Operated 20-cell Electrochemical Depolarized Concentrator Module for 2,291 h.
  - Final average carbon dioxide removal efficiency of 84% at 400 Pa (3 mm Hg) partial pressure.
  - Final average cell voltage of 0.41 V at 20 mA/cm^2 (19 ASF).

INTRODUCTION

The Independent Air Revitalization Subsystem (IARS) consists of a Water Vapor Electrolysis Module (WVEM) to generate oxygen (O_2) from water vapor contained in the cabin air, an Electrochemical Depolarized Carbon Dioxide (CO_2) Concentrator Module (EDCM) to remove CO_2 from the cabin air, the Control/Monitor Instrumentation (C/M I) (which includes the power sharing controller), and the ancillary mechanical and electrical components required to operate the subsystem. The removal of water vapor from the cabin air results in partial humidity control. The IARS is sized to remove 3.0 kg/d (6.6 lb/d) of CO_2 and generate 2.5 kg/d (5.5 lb/d) of O_2 while maintaining the cabin CO_2 partial pressure (pCO_2) and O_2 partial pressure (pO_2) at 400 Pa (3.0 mm Hg) and 22 kPa (3.2 psia), respectively.

Background

The concepts of water vapor electrolysis and electrochemical CO_2 concentration have demonstrated great promise for use in future manned spacecraft.[1-13] The results of development efforts and associated ground test programs accomplished to date, under several NASA contracts, have successfully demonstrated that (1) the electrolysis of water vapor into hydrogen (H_2) and O_2 can be performed over a wide range in cabin humidity levels and (2) the CO_2 can be controlled by electrochemical techniques at the physiologically-desired levels of less than 400 Pa (3 mm Hg). Further development in these areas also has demonstrated the feasibility of combining these two techniques into an integrated water vapor electrolysis/CO_2 concentration subsystem[14-18] which can be operated as an IARS. This design makes possible the selective use of a "local control" concept, in which areas of high metabolic activity in the spacecraft can be accommodated without oversizing the central atmospheric control system. It is now the intention of NASA to focus the successful work in independent air revitalization technology on a specific flight test, along with other individual technologies in the area of regenerative life support.

(1-13) References cited are at the end of this report.

Program Objectives

The objective of the program was to design, develop and test a three-person, preprototype IARS. The subsystem hardware, described herein, will be combined with other regenerative life support elements to comprise an integrated preprototype Regenerative Life Support Evaluation (RLSE). This integrated system is scheduled for testing and further evaluation by NASA JSC. The objective of such an evaluation will be to demonstrate the operational readiness of the IARS concept while operating as an independent subsystem and as part of an integrated regenerative life support system.

Program Organization

The program was organized into six tasks whose specific objectives were:

1. Perform preliminary and final design activities for the development of a preprototype IARS sized for the nominal metabolic requirements of three persons (O_2 generation and CO_2 removal).

2. Fabricate, assemble and functionally check out the three-person capacity IARS, including electrochemical modules, ancillary components, process air ducting, structural support, and C/M I.

3. Perform checkout, calibration, shakedown, parametric/endurance and acceptance testing of the IARS to demonstrate hardware maturity and characterize its performance as a function of pCO_2, relative humidity (RH) and operating time.

4. Deliver the preprototype IARS to NASA JSC following inspection, refurbishment, if required, and packaging.

5. Establish, implement and maintain a mini-Product Assurance program throughout the contractual period to search out quality weaknesses and to define appropriate, effective measures.

6. Develop a steady-state Math Model Computer Program to predict performance of the IARS, and prepare a User's Manual. The program shall predict IARS outlet CO_2, water and O_2 partial pressures given inlet partial pressures and subsystem operating parameters. Subsystem performance prediction as a function of air flow rate and temperature, and module current density and temperature shall be an inherent capability of the model.

The objectives of the program were achieved. The following sections present the IARS concept and hardware developed, the results of the work completed, the conclusions reached and recommendations made.

INDEPENDENT AIR REVITALIZATION SUBSYSTEM

The function of the IARS is to generate a net quantity of O_2 for metabolic consumption, remove metabolic CO_2 and provide partial humidity control.

Concept Description

The IARS concept is depicted schematically in Figure 1. The IARS combines two electrochemical processes (electrolysis of water vapor and electrochemical concentration of CO_2) with a C/M I that includes an electronic power sharing controller. Oxygen generation, CO_2 removal and partial humidity control are achieved within a single, automatically controlled subsystem.

Electrochemical Carbon Dioxide Concentration

Carbon dioxide is removed from a flowing air stream in an electrochemical module consisting of a series of individual electrochemical cells. Each cell consists of two electrodes separated by a matrix containing an aqueous carbonate electrolyte solution. Specific electrochemical and chemical reactions are detailed in Figure 2.

Moist cabin air containing CO_2, as well as O_2, is fed to the cathode where the electrochemical reaction of O_2 and water forms hydroxyl ions (OH^-). These ions react with the CO_2 to form carbonate ions ($CO_3^=$). The output from the cathode compartment is moist air at a reduced pCO_2.

On the anode side, H_2 is fed into the cells. The electrochemical reaction of H_2 and OH^- forms water. This decreases the concentration of OH^- in the electrolyte. The result is a shift in the $CO_3^=/CO_2$ equilibrium such that CO_2 is given off, completing its transfer from the cathode compartment to the anode compartment. The anode effluent contains the CO_2 mixed with any excess H_2. The overall reaction is accompanied by the formation of electrical energy and is exothermic.

Performance of an EDC is measured by its CO_2 removal efficiency and electrical efficiency. Inspection of the overall reaction, as based on the $CO_3^=$ transfer mechanism, shows that two moles of CO_2 can be transferred for one mole of O_2 consumed. This, by definition, represents a CO_2 removal efficiency of 100%. The equivalent to 100% efficiency mass ratio is 2.75 units of CO_2 removed for each unit of O_2 consumed. This ratio is referred to as the Transfer Index (TI).

The electrical efficiency reflects the available electrical power produced by the electrochemical reaction and is measured as the product of the cell current and voltage. The theoretical open-circuit voltage is 1.23 V. In practical applications and with current flowing, cell voltages of less than 1.23 V result. High EDC electrical efficiency is, therefore, reflected by high cell voltage.

Water Vapor Electrolysis

Oxygen and H_2 are generated from the water vapor contained in a flowing air stream in an electrochemical module consisting of a series of individual Water Vapor Electrolysis (WVE) electrochemical cells. Each cell consists of two electrodes separated by a matrix containing an acidic electrolyte. The specific electrochemical reactions are detailed in Figure 3.

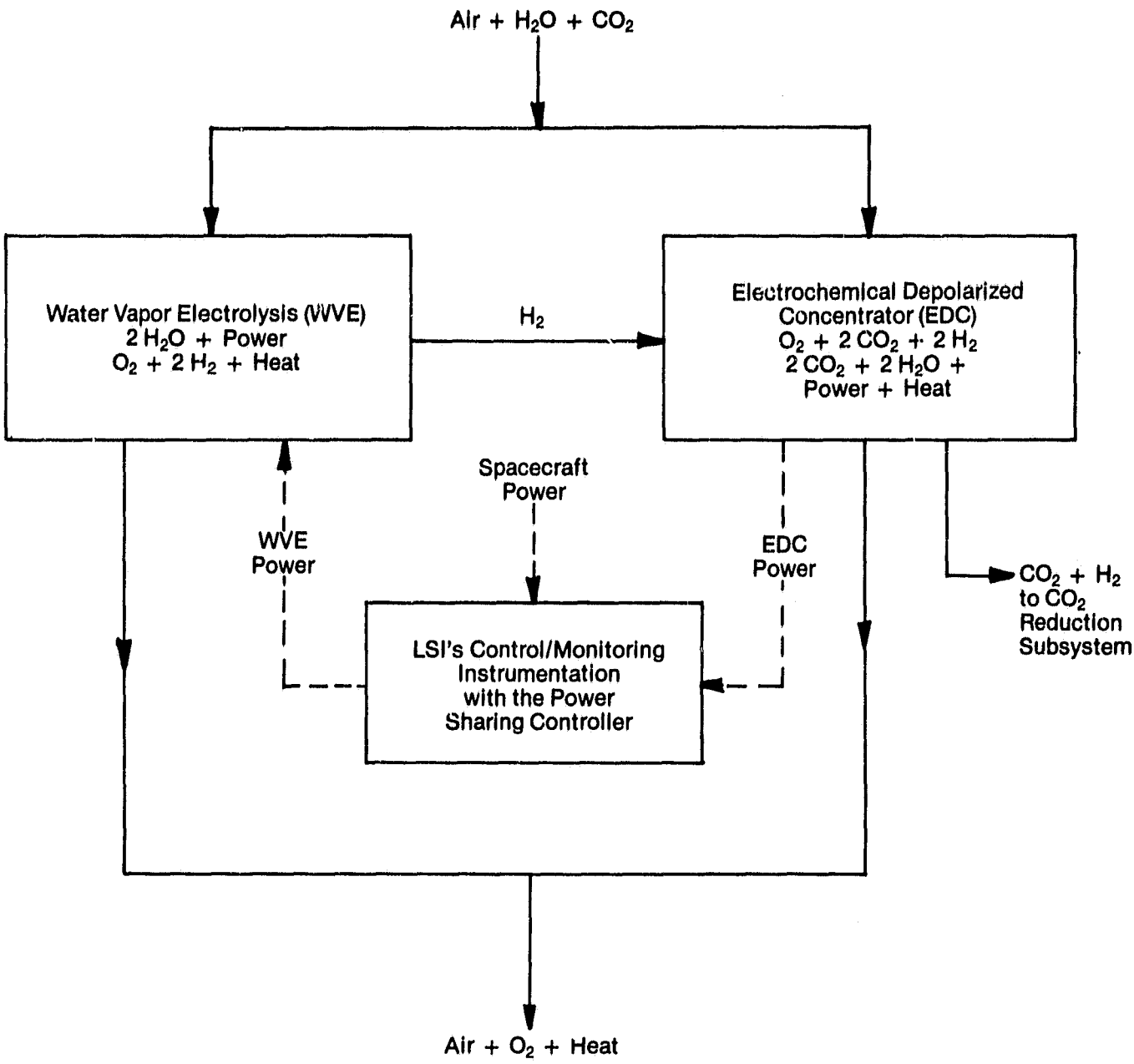

FIGURE 1 INDEPENDENT AIR REVITALIZATION SUBSYSTEM CONCEPT

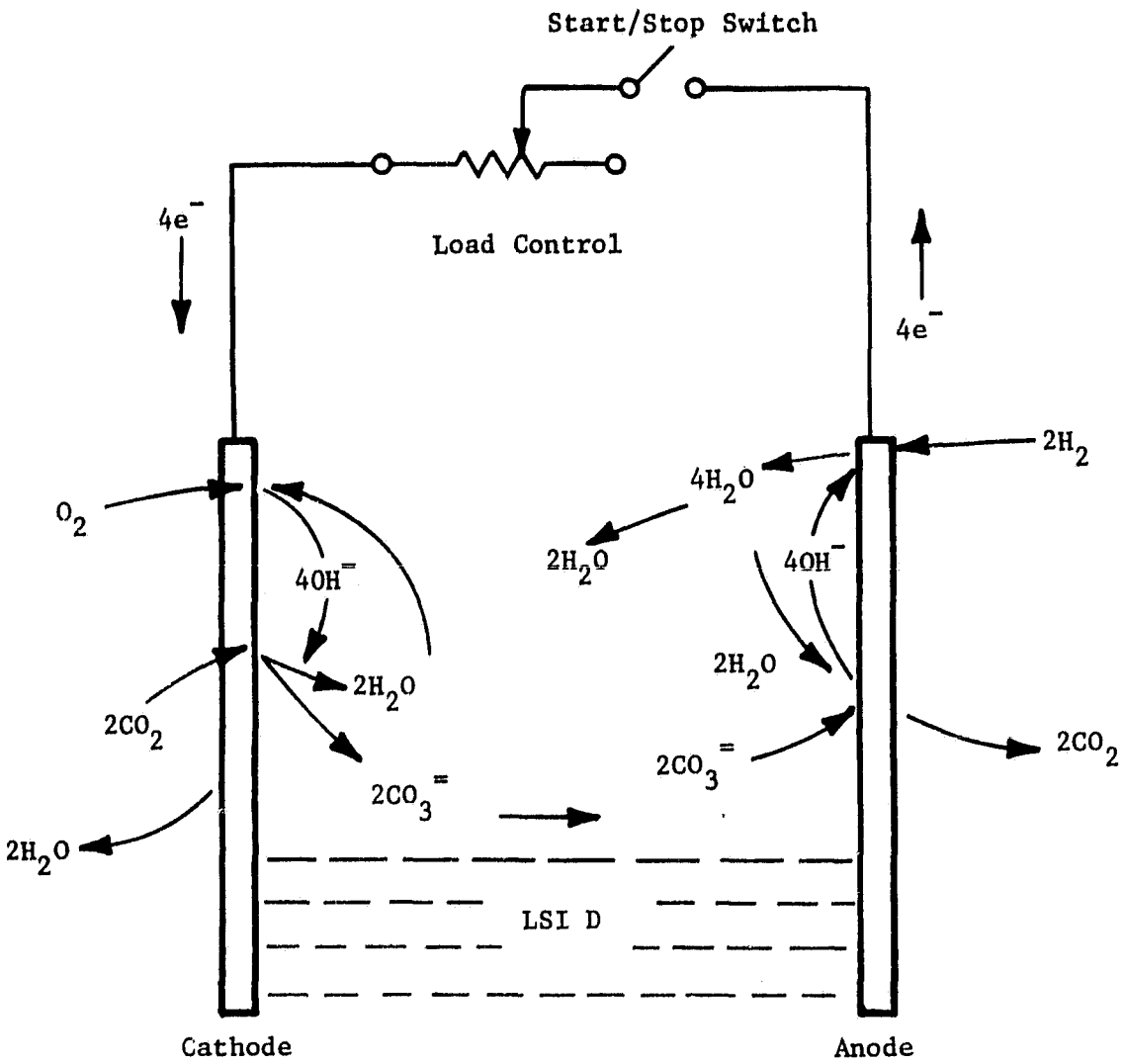

Cathode Reactions

$O_2 + 2H_2O + 4e^- = 4OH^-$

$4OH^- + 2CO_2 = 2H_2O + 2CO_3^=$

Anode Reactions:

$2H_2 + 4OH^- = 4H_2O + 4e^-$

$2CO_3^= + 2H_2O = 4OH^- + 2CO_2$

Overall Reactions:

$O_2 + 2CO_2 + 2H_2 = 2CO_2 + 2H_2O$ + Electrical Energy + Heat

FIGURE 2 EDC FUNCTIONAL SCHEMATIC WITH REACTIONS

ORIGINAL PAGE IS
OF POOR QUALITY

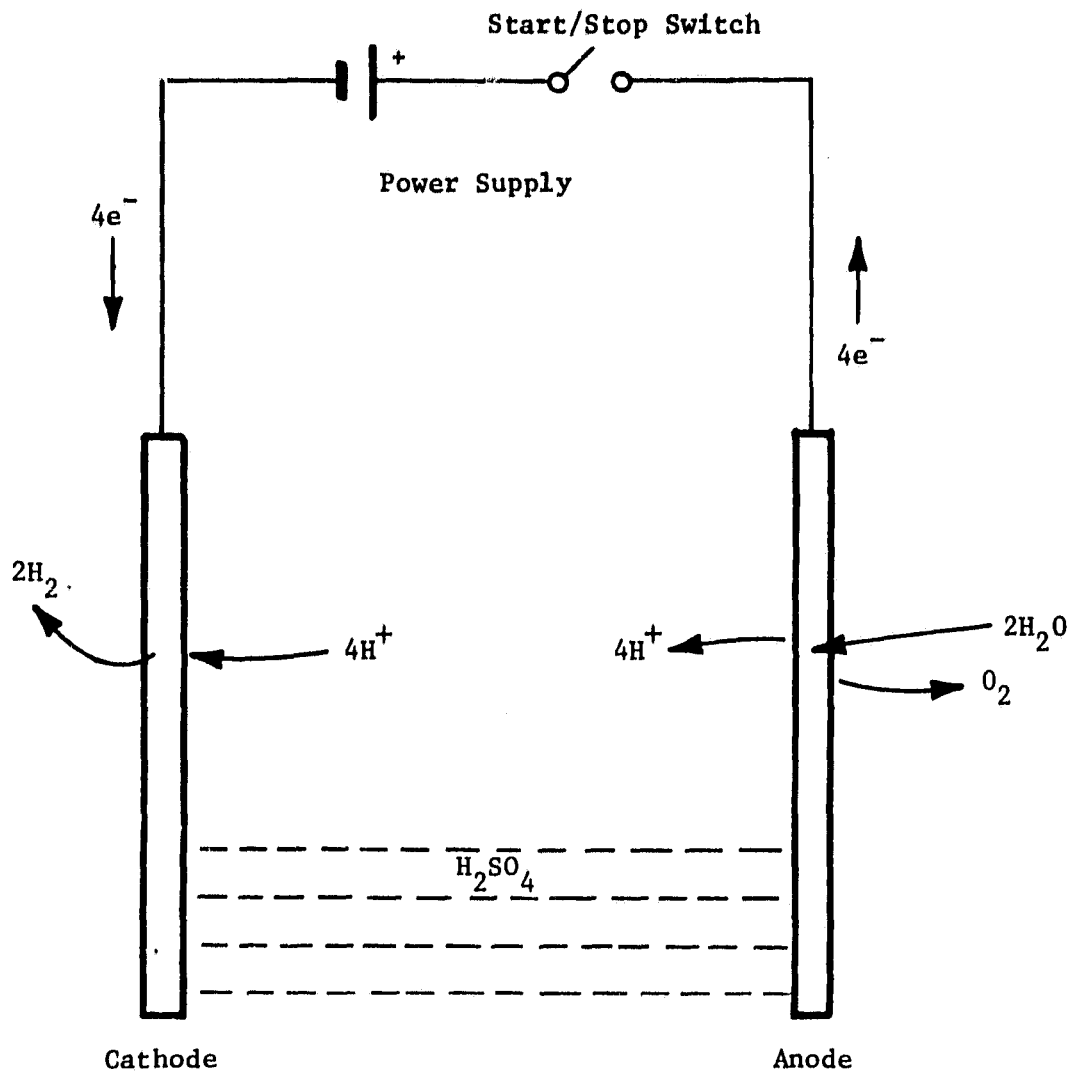

Cathode Reactions:

$4H^+ + 4e^- = 2H_2$

Anode Reactions:

$2H_2O = O_2 + 4H^+ + 4e^-$

Overall Reaction:

Electrical Energy + $2H_2O = 2H_2 + O_2$ + Heat

FIGURE 3 WVE FUNCTIONAL SCHEMATIC WITH REACTIONS

Moist air is fed to the anode where the electrochemical oxidation of water forms O_2 and hydrogen ions (H^+). The output of the anode compartment is air reduced in humidity and enriched in O_2 content. On the cathode side, H^+ acquire electrons to form gaseous H_2. The overall reaction requires electrical energy and, at practical voltage levels, waste heat is generated.

The performance of a WVEM is reflected by voltage which is a direct measure of the power required by the WVEM. The electrical energy consumed by the electrochemical reaction occurring in a WVEM is a function of the current and the average cell voltage. The theoretical electrochemical cell voltage is 1.23 V. In practical applications, cell voltages above 1.23 V result. High WVEM electrical efficiency is reflected by low cell voltages, and therefore low power consumption to perform the electrochemical process of O_2 and H_2 generation.

Power Sharing Controller

The power sharing controller contains the circuits necessary to allow the utilization of EDCM power and to convert the input power to the voltage and current levels required by the WVEM. A block diagram of the power sharing controller is presented in Figure 4. Using this technique in an IARS, the EDCM power can be directly subtracted from the power required to operate the WVEM. The remaining power required to operate the WVEM is then obtained from the input power. In the past the power which the EDCM generated had been converted to heat and removed from the subsystem as a waste product.

The benefits of using EDCM power are:

1. One hundred percent of the EDCM power is utilized. It is not necessary to send it through a power conversion circuit before it is supplied to the WVEM.

2. There is no heat removal penalty associated with dissipating EDCM power because all of it is used.

3. The amount of power required from the input power source is reduced by an amount equal to EDCM power divided by the power conversion efficiency (typically 85 to 90%) which further reduces the heat load caused by power conversion losses.

4. The operation is completely automatic and requires no manual adjustment.

5. The concept is independent of cell area, current density, voltage and cell arrangement (i.e., series/parallel combinations).

Design Specifications

Table 2 lists the preprototype IARS specifications. The IARS is designed to meet the CO_2 removal and O_2 generation requirements of three people in a Spacelab-type cabin environment. The IARS must, therefore, perform its design function over a 35 to 70% RH range throughout the 292 to 300 K (65 to 80 F)

ORIGINAL PAGE IS
OF POOR QUALITY

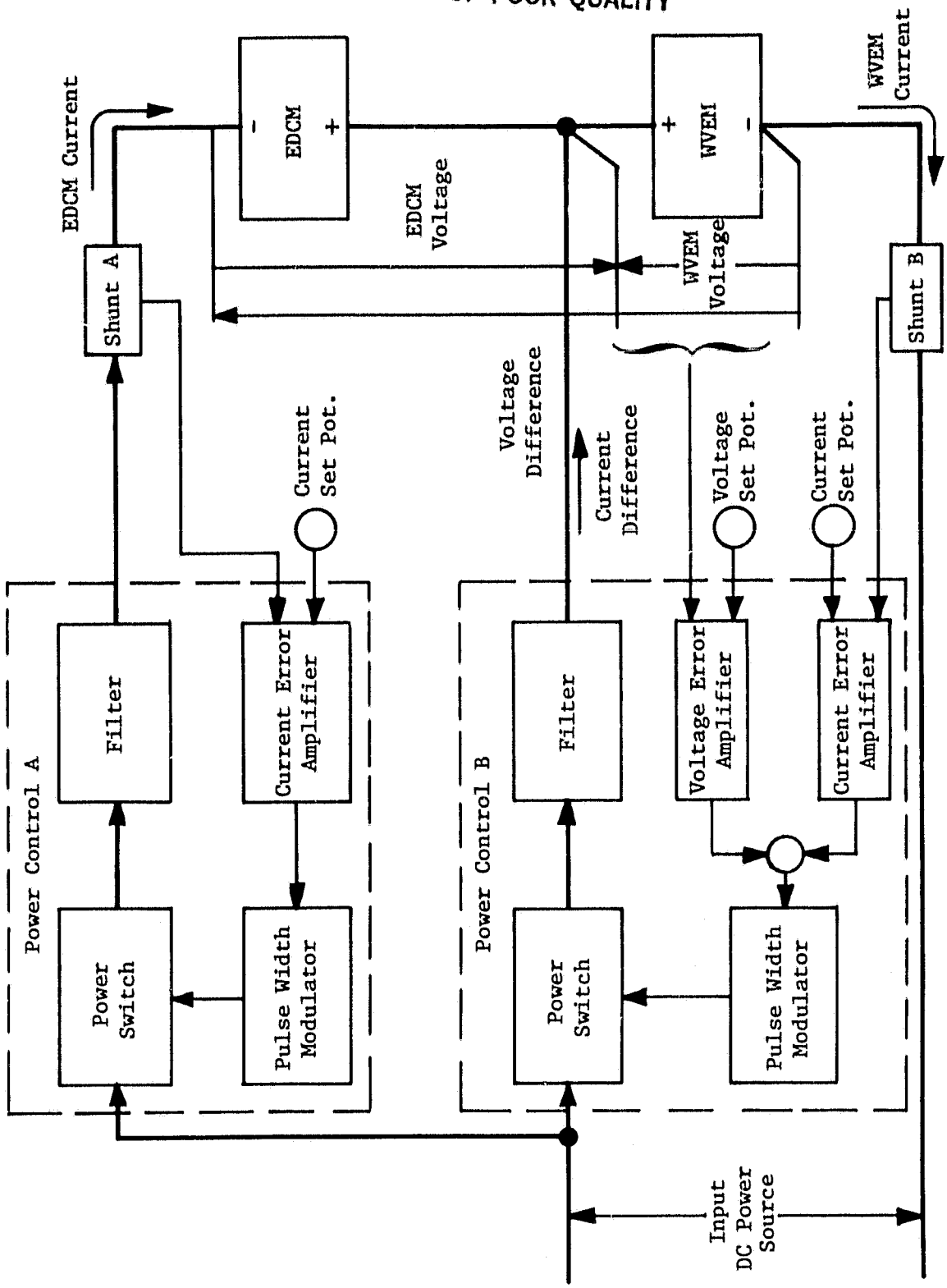

FIGURE 4 DETAILED BLOCK DIAGRAM OF POWER-SHARING CONTROLLER

TABLE 2 IARS DESIGN SPECIFICATIONS

Crew Size	3
CO_2 Removal Rate, kg/d (lb/d)	3.0 (6.6)
Cabin pCO_2, Pa (mm Hg)	400 (3.0)
O_2 Generation Rate, kg/d (lb/d)	2.5 (5.5)
Cabin pO_2, kPa (psia)	22.1 (3.2)
Cabin Temperature, K (F)	291 to 300 (65 to 80)
Cabin Humidity	
Relative Humidity, %	26 to 70
Dew Point, K (F)	279 to 294 (42.5 to 69.5)
Cabin Pressure, kPa (psia)	101 (14.7)
Purge Gas	N_2
Purge Gas Pressure, kPa (psia)	310 (45)
Electrical Power, VAC	115/200, 400 Hz, 3Ø 115, 60 Hz, 1Ø
VDC	56 ± 2.5
Gravity	0 to 1

dry bulb temperature range. The IARS must also have the capability of being operated at a cabin RH between 26 and 35% for up to one hour, but the three-person metabolic requirement may not be satisfied during this stage of operation.

Design Requirements

The overall design requirements for the IARS are summarized in Table 3. Both the requirements established by the contract and those incorporated by Life Systems, Inc., are indicated. The IARS is independent in operation, requiring only electrical energy, process air with an ample supply of water vapor, an H_2/CO_2 vent, and a nitrogen (N_2) gas purge supply.

Packaging Constraints

Figure 5 shows the projected RLSE envelope for the preprototype IARS. This envelope consists of the bottom third of a double Spacelab-mounted rack. The IARS is located directly below the Sabatier CO_2 Reduction Subsystem (S-CRS), and next to the central Electrochemical CO_2 Concentrator Subsystem. Although not required, the preprototype mechanical IARS components were designed to fit within these packaging envelopes. The relative location of these subsystems for the preprototype RLSE testing at JSC may be slightly different.

Maintenance Considerations

The IARS has been designed for component maintainability from the front side of the subsystem only. This will allow the IARS to be rack mounted and maintainable without dependency on slide and latching mechanisms, otherwise needed for rack maintenance. However, while the electrochemical modules might be considered line replaceable units for long-term missions, they will not be removable from the front for the rack mounted RLSE application. Life Systems' in situ cell maintenance concept for electrochemical cells has been incorporated into the design. All other subsystem components will be maintainable using the line replaceable or flight replaceable component concept.

Interfaces Specifications

Table 4 lists the fluid, power and heat rejection interfaces for the IARS. The IARS interfaces with the cabin atmosphere from the lower and back surfaces of the subsystem. The CO_2 and H_2 exhaust interfaces with the S-CRS or the overboard vent. The N_2 purge also exhausts to overboard vent.

The power required by the IARS is 115/200 VAC, 60 Hz and 400 Hz power, and 56 ± 2.5 VDC.

Subsystem Operation

The IARS subsystem is designed as a complete, one step startup air revitalization subsystem requiring only four interfaces (power, N_2, cabin air and CO_2 reduction or vent exhaust line).

TABLE 3 IARS DESIGN REQUIREMENTS

	Contract	LSI
Independent operation as a subsystem	X	
Integrated operation as part of an ARS	X	
Compatible with zero- and one-g Testing	X	
Capable of being rack mounted as required for Spacelab	X	
Operation over a wide humidity range	X	
Nonoperational tolerance over a 10 to 90% RH range	X	
Capable of operation at low RH	X	
Separate Control and Monitoring Instrumentation	X	
Computer-based instrumentation		X
CRT type display on front panel		X
Performance trend analysis and display		X
Normal operation at less than three-person level	X	
Number of cells optimized for lowest equivalent weight for a given cell hardware configuration	X	
Flight Replaceable Unit concept employed for maintenance at the component level		X
Incorporate RLSE design specifications	X	
Shelf life $\geq$1 Year[a]	X	
Mock-up required		X
Optimized design for major components	X	
Compatible with JSC test facility	X	
All materials flight qualifiable[b]	X	

(a) A shelf life of $\geq$5 years is expected.
(b) Those materials not included in the preprototype will be flagged.

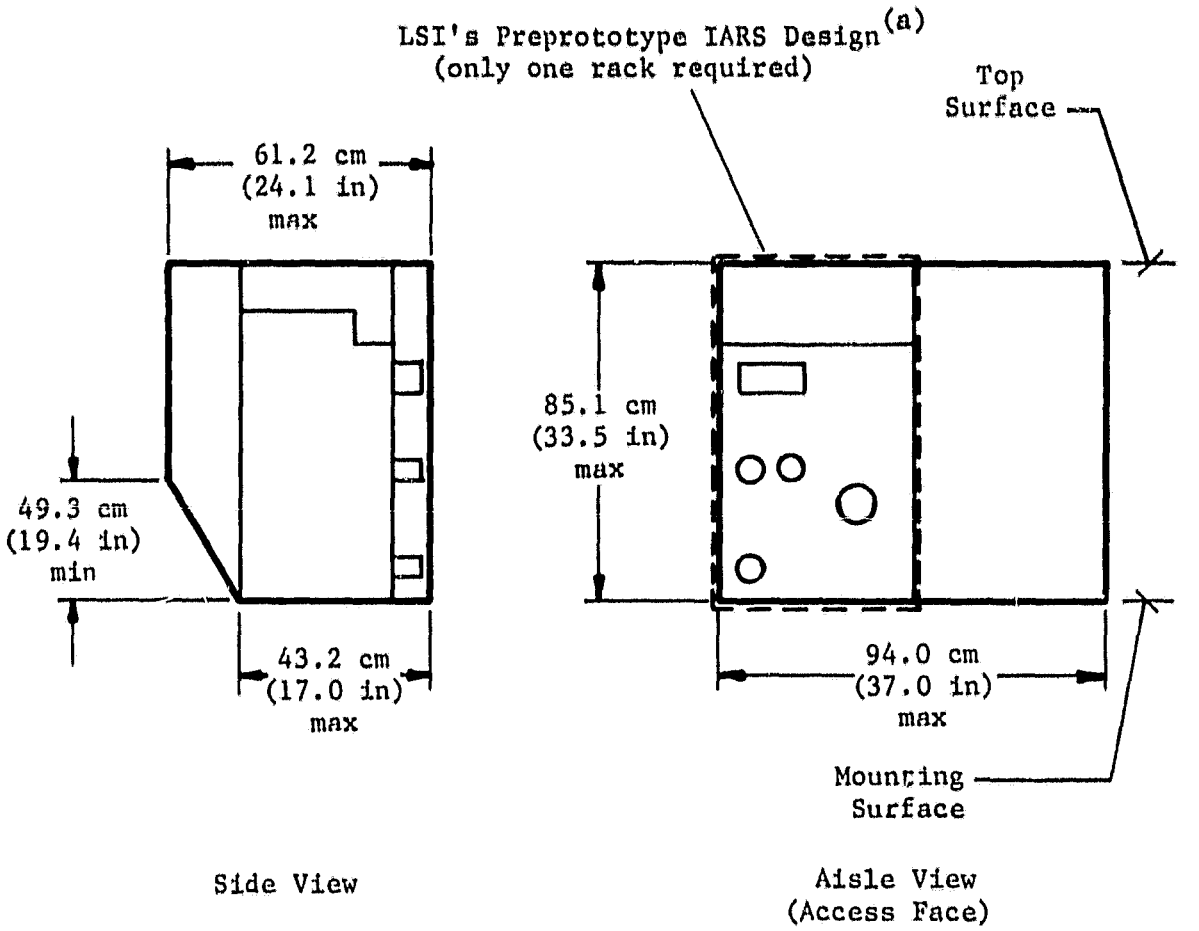

(a) Prior to subsequent duct/blower upgrade during test program

FIGURE 5 IARS DESIGN PACKAGING ENVELOPE FOR RLSE

TABLE 4 IARS DESIGN INTERFACES

Cabin (from and to)	
Process Air Flow Rate, m^3/min (scfm)	13 (460)
To CO_2 Reduction (or vent)	
H_2 Flow Rate, kg/h (lb/h)	0.013 (0.029)
CO_2 Flow Rate, kg/h (lb/h)	0.125 (0.275)
Power, W[a]	
AC (400 Hz)	300
DC	960
Heat Load, W[a]	690
N_2 Purge	
Purge Flow, kg/h (lb/h)	0.27 (0.60)
Purge Duration, min	2

(a) Mechanical portion of IARS, only.

Water vapor in the cabin air is electrolyzed in the WVEM to form O_2 and H_2. The O_2 produced in the WVEM, which significantly exceeds the amount removed from the air by the EDCM, is generated directly into the process air stream. A portion of the H_2 generated in the WEVM is used in the EDCM for the CO_2 removal process. The CO_2 in the process air entering the EDCM is removed from the air stream and transferred to the H_2 stream originating from the WVEM. Process air exits from the EDCM and the WVEM at reduced pCO_2 and water vapor concentration and increased pO_2 concentrations and is returned to the cabin. The H_2 and CO_2 stream is either used in the CO_2 Reduction Subsystem (CRS) or vented overboard.

Subsystem Sizing

The IARS sizing required determining the number of WVE and EDC cells, selecting the process air fan, and performing heat and mass balances. The actual sizing calculations took place in five sequential steps:

1. Design curves were plotted. These curves were based on prior test data and an experience the way WVE cell voltage, EDC CO_2 removal efficiency and EDC cell voltage vary with current density.

2. Optimum WVE and EDC current densities for lowest equivalent weight were calculated.

3. The optimum numbers of WVE and EDC cells were determined.

4. A process air fan was selected based on the number of cells, the projected subsystem pressure drop and the total required air flow.

5. The subsystem heat and mass balances required for selection of ancillary components were calculated.

Design Curves

The design curves used in sizing the IARS are presented in Figures 6 and 7. They show EDCM and WVEM performance, respectively, after 90 days of operation and were derived from actual test data at the one-person level.[18]

Module Sizing

The electrochemical modules are the heart of the IARS. They perform the actual CO_2 removal and O_2 generation processes.

The sizing of these modules was accomplished in three steps. Initially the optimum WVEM current density of 49.9 mA/cm^2 (46.4 ASF) was determined using the average slope of the current density versus cell voltage design curve, Figure 7. The second step involved the determination of the optimum EDCM current density as based on total WVEM and EDCM equivalent weight. The optimum EDCM current density occurred at approximately 20.4 mA/cm^2 (19.5 ASF) as illustrated in Figure 8. The final step determined the number of EDC and WVE cells required to satisfy the three-person CO_2 removal and O_2 generation

ORIGINAL PAGE IS
OF POOR QUALITY

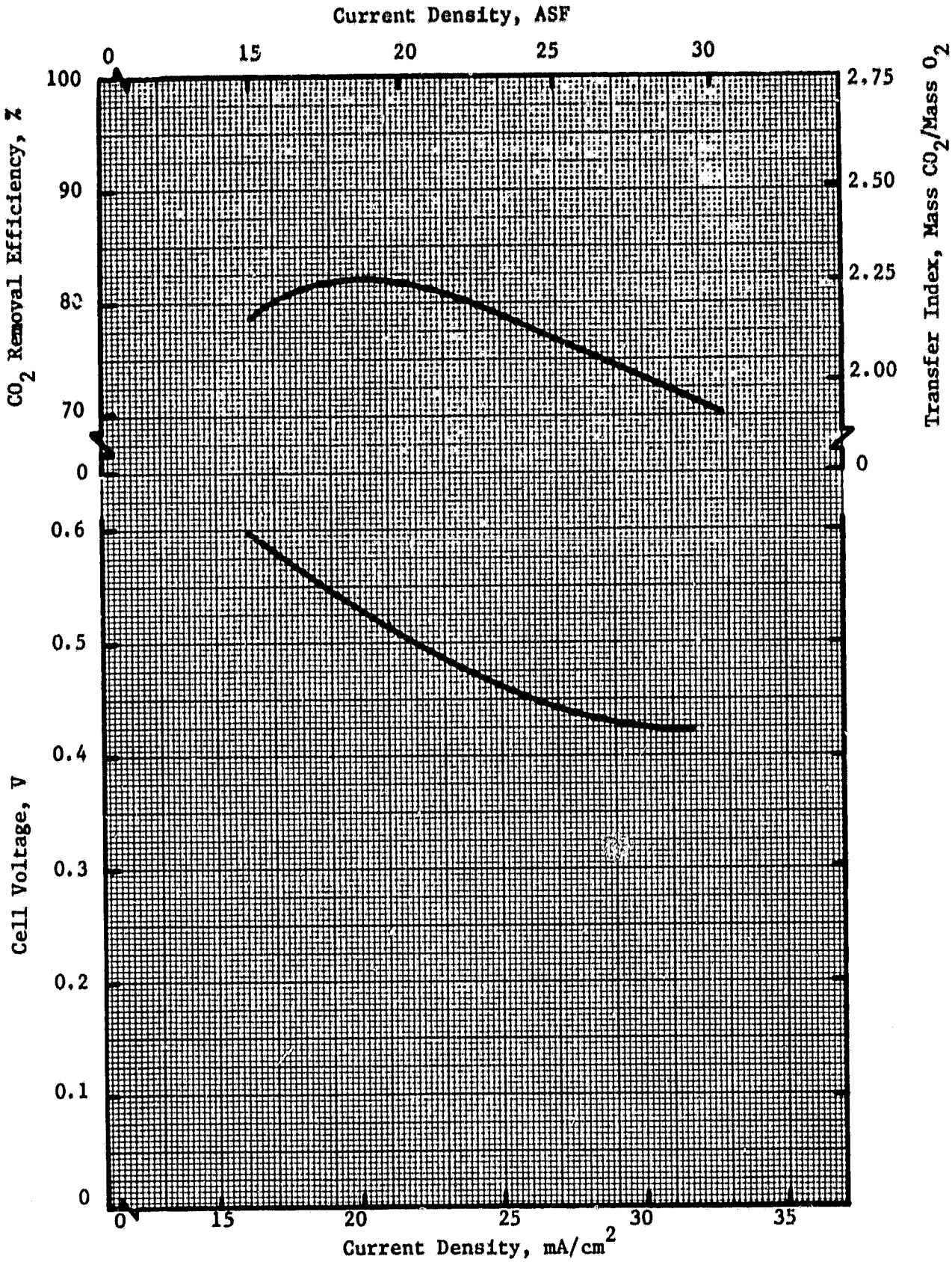

FIGURE 6 EDCM DESIGN CURVE: CO_2 REMOVAL EFFICIENCY AND CELL VOLTAGE VERSUS CURRENT DENSITY

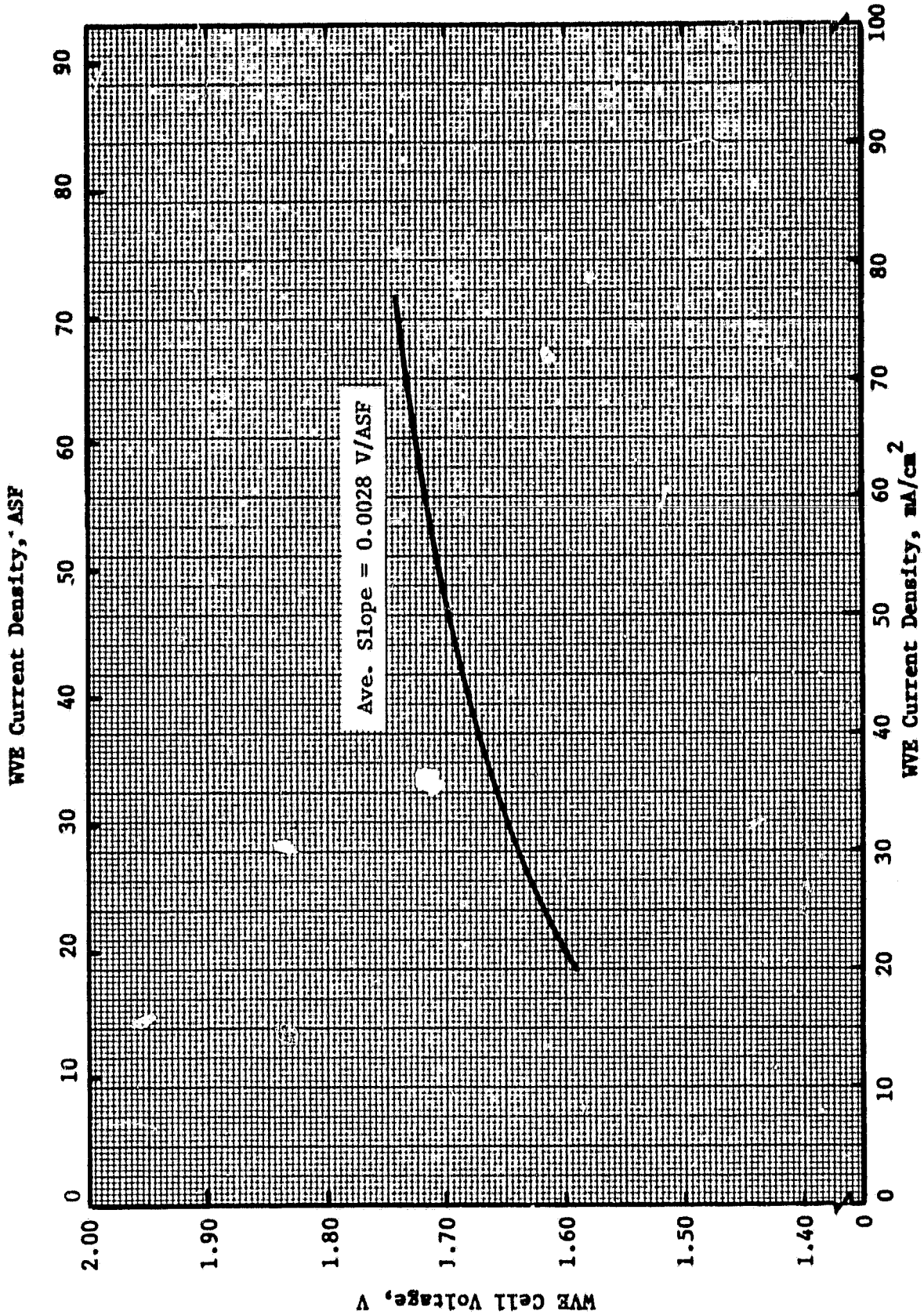

FIGURE 7 WVEM DESIGN CURVE: AVERAGE CELL VOLTAGE VERSUS CURRENT DENSITY

ORIGINAL PAGE IS
OF POOR QUALITY

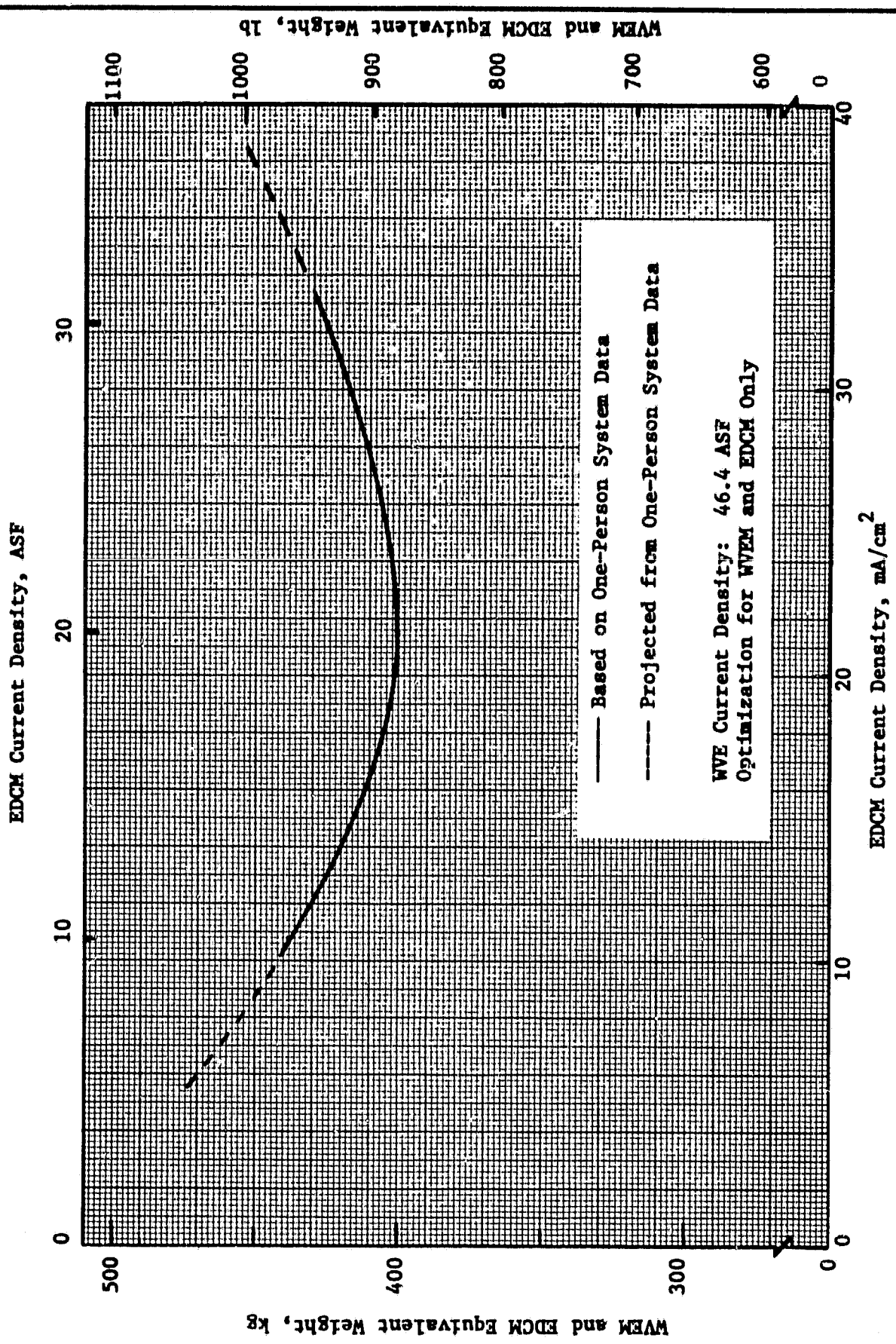

FIGURE 8 EDCM DESIGN CURVE: OPTIMUM EDC CURRENT DENSITY

requirements. A summary of the WVEM and EDCM design characteristics is presented in Table 5.

Heat and Mass Balance

The heat and mass balances required to size the ancillary mechanical and electrical components that control and monitor subsystem performance were completed. The heat and mass balances are summarized in Figure 9, which shows the process stream operating parameters.

Mechanical Hardware Description

A summary of the IARS mechanical subsystem characteristics is provided in Table 6. The schematic of the preprototype IARS is shown in Figure 10. The parts list is given in Table 7.

Process air is drawn from the cabin through a filter (AF1), isolation valve (V2) and the electrochemical modules (EM1, EM2) by a single fan (B1). The process air is returned to the cabin through the outlet air isolation valve (V1). Process air is manifolded in parallel through the cooling air and electrochemical cell air cavities of the WVEM and the EDCM.

The dew point and temperature of the inlet process air are monitored by sensors D1 and TS1 to protect the subsystem from out-of-tolerance RH conditions. The temperatures of the EDCM and WVEM are monitored using temperature sensors located in the outlet air stream from the electrochemical cell cavities (TS2 and TS3, respectively).

Hydrogen generated in the WVEM flows through a pressure sensor (P2) and flow sensor (F1) prior to entering the EDCM. The H_2 and CO_2 exhaust stream from the EDCM then passes through a flow sensor (F2), a pressure sensor (P3) and exhausts the subsystem either to vent through a backpressure regulator (PR1) and motor-driven valve (V5) or to the CRS through a motordriven valve (V6). The flow and pressure sensors located in the H_2 lines are used for fault detection and isolation.

Nitrogen purge is provided through a motordriven valve (V3). The N_2 flow is controlled by an orifice (RX1) and its pressure monitored using a pressure sensor (P1).

Component Descriptions

A summary of the subsystem components' weight, power and heat rejection requirements is given in Table 8. The preprototype IARS mechanical components weigh 80.6 kg (177.5 lb). The total mechanical portion of the IARS weighs 99 kg (218 lb) with allowances for packaging, including ducting, shrouding, mounting plates, brackets, fittings, tubing and wiring.

Packaging

The overall IARS characteristics for the mechanical component assembly were given in Table 6. Figures 11 and 12 show the initial preprototype IARS,

TABLE 5 IARS MODULE DESIGN OPERATING CHARACTERISTICS

	WVEM	EDCM
Number of Cells	24	20
Active Area per Cell, cm^2 (ft^2)	464 (0.50)	464 (0.50)
Current Density (Nominal), mA/cm^2 (ASF)	48.0 (44.6)	20 (18.6)
Cell Voltage (Nominal), V	1.70	0.51
CO_2 Transfer Efficiency, %	N/A	82
Power Consumed, W	910	-95
Waste Heat Produced, W	252	138
O_2 Generated, kg/d (lb/d)	3.84 (8.46)	-1.34 (-2.94)
H_2 Generated, kg/d (lb/d)	0.482 (1.06)	-0.17 (-0.37)
Water Removed, kg/d (lb/d)	4.33 (9.52)	-1.50 (-3.31)

ORIGINAL PAGE IS
OF POOR QUALITY

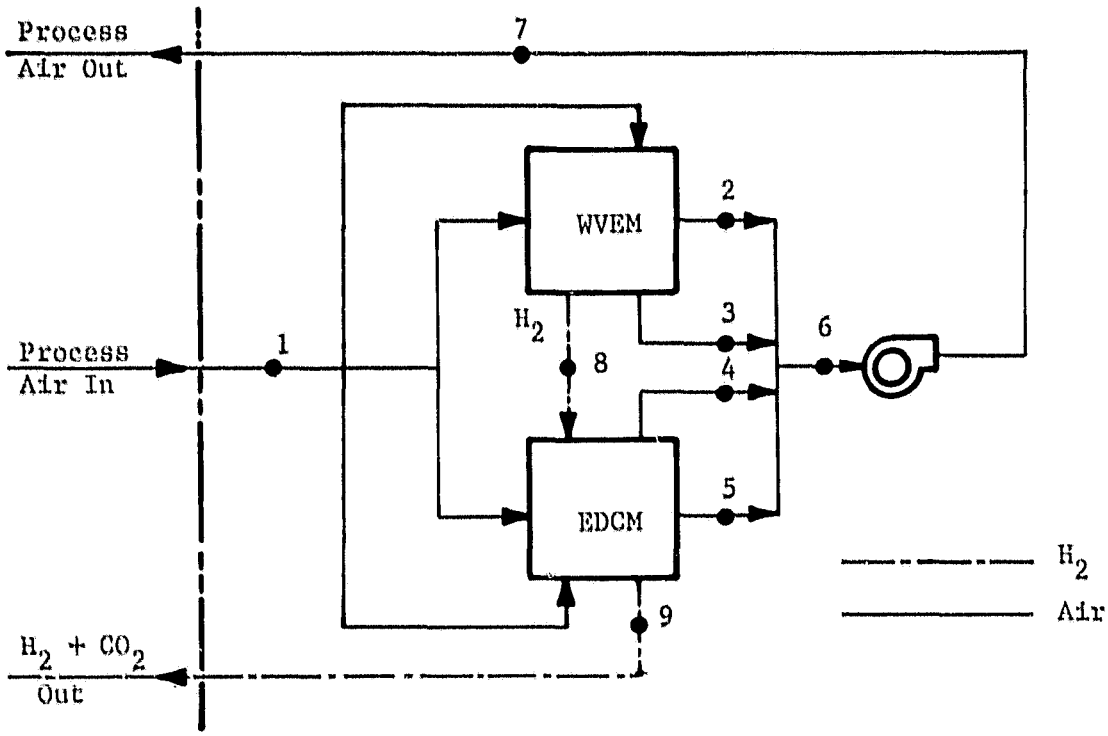

Station	1	2	3	4	5	6	7	8	9
Temperature, F	70.0	74.0	73.0	71.9	72.9	72.7	74.0	74.0	72.9
Pressure, Psia	14.70	14.64	14.64	14.64	14.64	14.64	14.70	22.40	19.70
Volumetric Flow, Scfm	460	40.8	210.0	175.0	34.0	460	460	0.143	0.134
Total Weight Flow x 10^{-4}, Lb/Day	4.97	0.441	2.27	1.89	0.367	4.97	4.97	1.16×10^{-4}	7.43×10^{-4}
O_2 Weight Flow x 10^{-4}, Lb/Day	1.197	0.1073	0.5460	0.4560	0.0884	1.198	1.198	------	------
CO_2 Weight Flow x 10^{-2}, Lb/Day	2.99	0.265	1.37	1.14	0.155	2.93	2.93	0.00	6.60×10^{-2}
H_2O Weight Flow x 10^{-2}, Lb/Day	5.67	0.409	2.59	2.16	0.453	5.61	5.61	9.58×10^{-4}	1.33×10^{-3}
H_2 Weight Flow, Lb/Day	-----	------	------	------	------	-----	-----	1.063	0.694
O_2 Partial Pressure, Psia	3.20	3.22	3.19	3.19	3.19	3.19	3.21	------	------
CO_2 Partial Pressure, mm Hg	3.00	2.98	2.99	2.99	2.10	2.93	2.94	0.00	304
H_2O Partial Pressure, mm Hg	9.38	7.58	9.34	9.34	10.1	9.23	9.27	7.58	10.1
H_2 Partial Pressure, Psia	-----	------	------	------	------	-----	-----	22.25	13.62
Dew Point Temperature, F	50.5	44.8	50.4	50.4	52.5	50.1	50.2	44.8	52.5
Relative Humidity, %	50.0	35.1	44.9	46.6	48.7	44.8	42.9	35.1	48.7

FIGURE 9 PROCESS STREAM OPERATING PARAMETERS

TABLE 6 IARS MECHANICAL SUBSYSTEM DESIGN GOALS

Crew Size	3
Fixed Hardware Weight, kg (lb)	97.8 (215.1)
Overall Dimensions, cm (in)	48.8 x 61.7 x 87.1 (19.2 x 24.3 x 34.3)
Volume, m^3 (ft^3)	0.26 (9.3)
Power Required, W	1,115
Heat Load, W	690
O_2 Generated, kg/h (lb/h)	0.104 (0.230)
CO_2 Removed, kg/h (lb/h)	0.125 (0.275)
Water Removed, kg/h (lb/h)	0.118 (0.260)

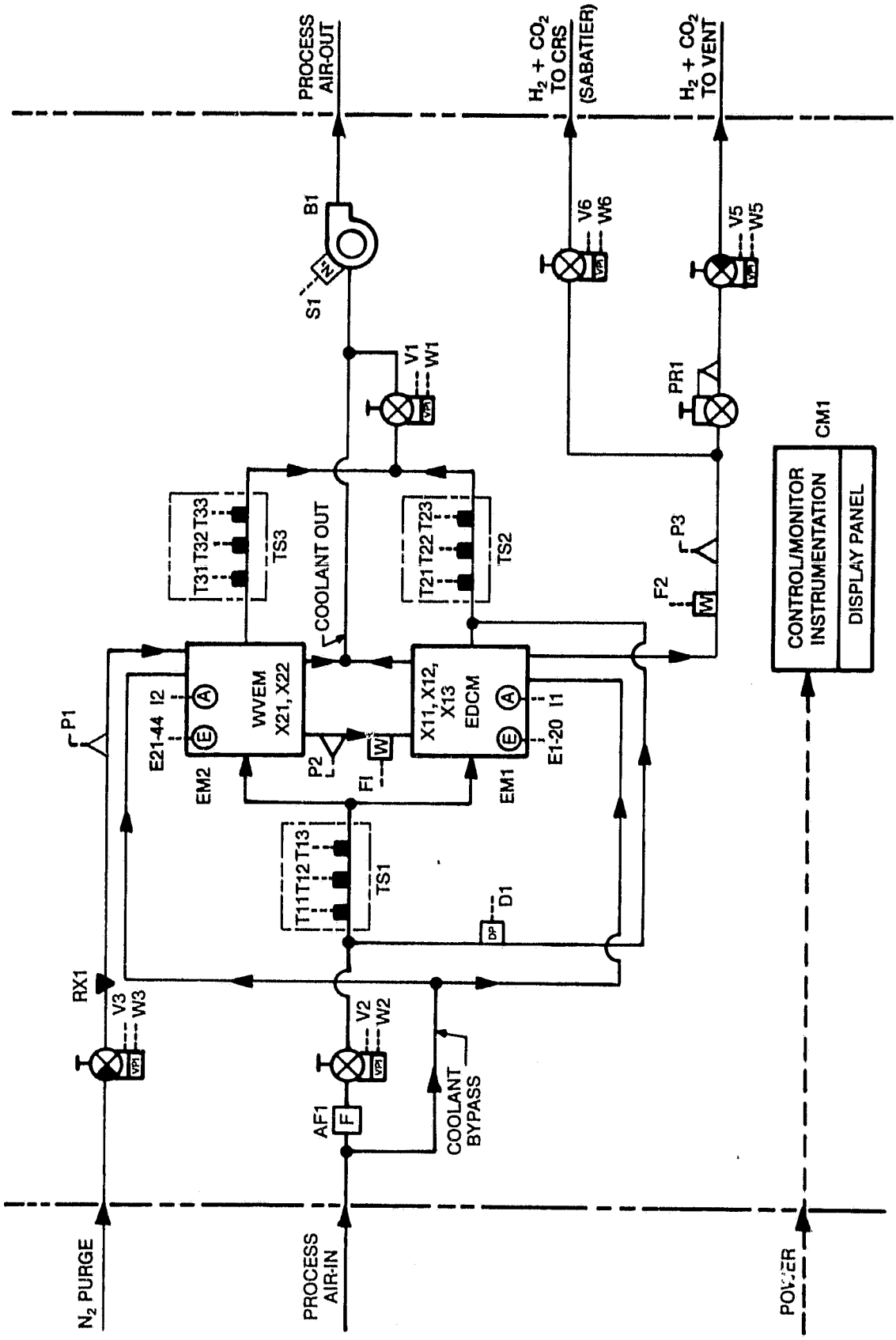

FIGURE 10 PREPROTOTYPE IARS SCHEMATIC

ORIGINAL PAGE IS
OF POOR QUALITY

TABLE 7 PREPROTOTYPE IARS PARTS LIST

Life Systems, Inc. CLEVELAND, OHIO 44122	PARTS LIST	NO.	REVISION LTR.
		PAGE 1 OF 1	DATE 8/18/77
TITLE INDEPENDENT AIR REVITALIZATION SUBSYSTEM (IARS)			

ITEM	QTY. REQ.	PART NUMBER	DESCRIPTION/TITLE/NAME		
1	1	EM1	Module, EDC		
2	1	EM2	Module, WVE		
3	1	B1	Fan (w/Speed Sensor)		
4	3	V3,V5,V6	Valve, Motor-Actuated		
5	2	V1-V2	Valve, Isolation		
6	1	PR1	Regulator, Backpressure		
7	3	P1-P3	Sensor, Pressure		
8	3	TS1-TS3	Sensor, Temperature		
9	2	F1,F2	Sensor, Flow		
10	1	DP1	Sensor, Dew Point		
11	1	RX1	Orifice, N_2 Purge		
12	1	AF1	Filter, Air		
13	1	CM1	Instrumentation, C/M w/Panel		

TABLE 8 IARS MECHANICAL DESIGN COMPONENTS WEIGHT, POWER AND HEAT REJECTION

Item No.	Component	No. Req'd	Weight, kg, (lb)	Total, kg, (lb)	AC Power, W	DC Power W	Heat, W
1	EDCM	1	32.8 (72.1)	32.8 (72.1)	---	-95	138
2	WVEM	1	30.6 (67.2)	30.6 (67.2)	---	910	252
3	Fan (w/Speed Sensor)	1	4.0 (8.8)	4.0 (8.8)	300	---	300
4	Valve, Motor-Actuated	3	1.2 (2.6)	3.6 (7.9)	(a)	---	---
5	Valve, Isolation	2	1.2 (2.6)	2.4 (5.2)	(a)	---	---
6	Backpressure Regulator	1	1.1 (2.3)	1.1 (2.3)	---	---	---
7	Sensor, Pressure	3	0.2 (0.5)	0.7 (1.5)	(b)	---	---
8	Sensor, Temperature, Triple Redundant	3	0.1 (0.3)	0.4 (0.9)	(b)	---	---
9	Sensor, Flow	2	1.1 (2.5)	2.3 (5.0)	(b)	---	---
10	Sensor, Dew Point	1	0.5 (1.0)	0.5 (1.0)	(b)	---	---
11	Orifice, N_2	1	0.05 (0.1)	0.05 (0.1)	---	---	---
12	Filter, Air	1	0.2 (0.5)	0.2 (0.5)	---	---	---
	Components Subtotal			78.4 (172.5)	300	815	690
	Packaging			19.4 (42.6)			
	Hardware Total			97.8 (215.1)			

(a) Requires power only to actuate
(b) Power included with instrumentation

ORIGINAL PAGE IS OF POOR QUALITY

ORIGINAL PAGE
BLACK AND WHITE PHOTOGRAPH

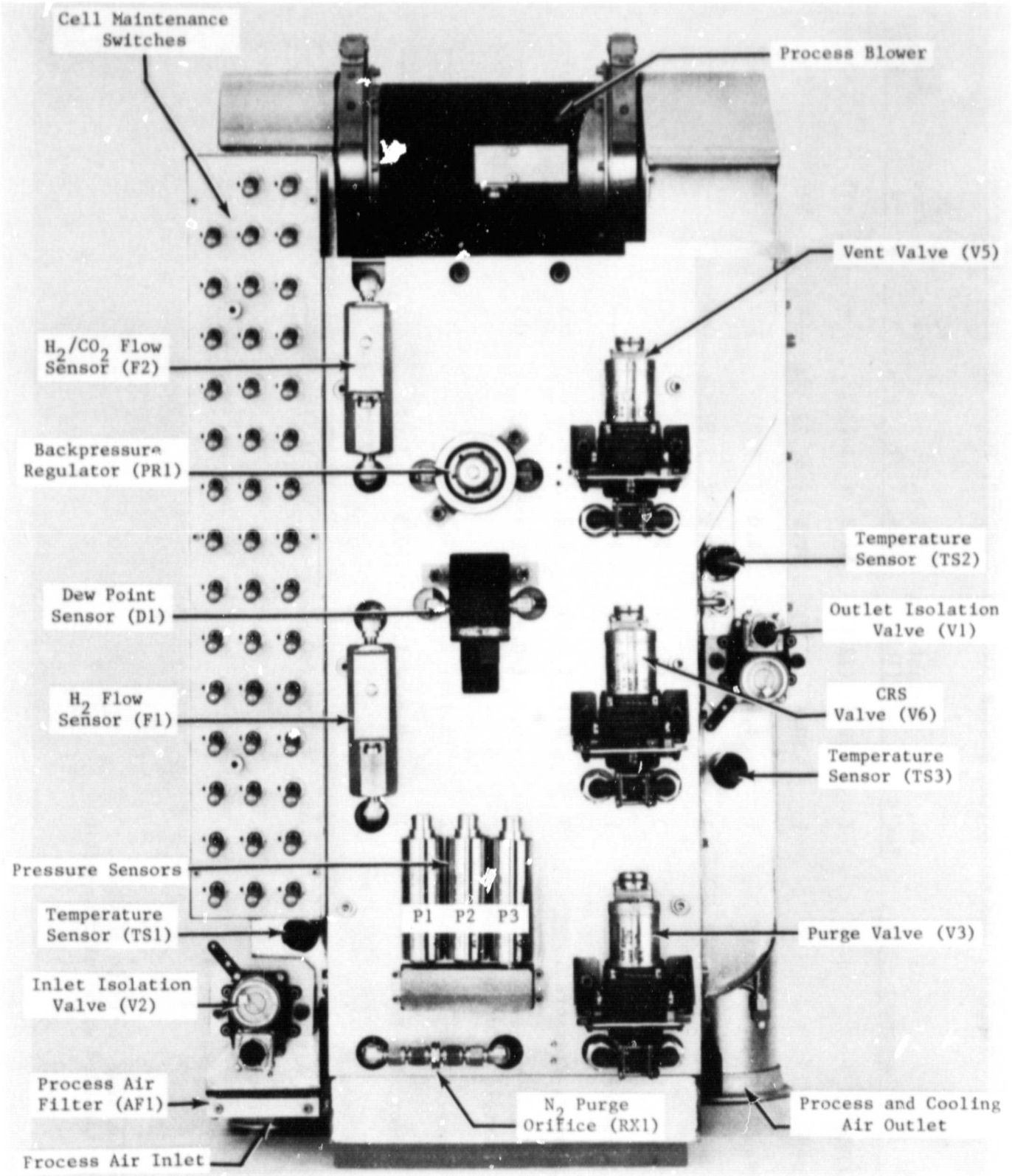

FIGURE 11 IARS MECHANICAL HARDWARE (FRONT VIEW OF INITIAL DESIGN)

ORIGINAL PAGE
BLACK AND WHITE PHOTOGRAPH

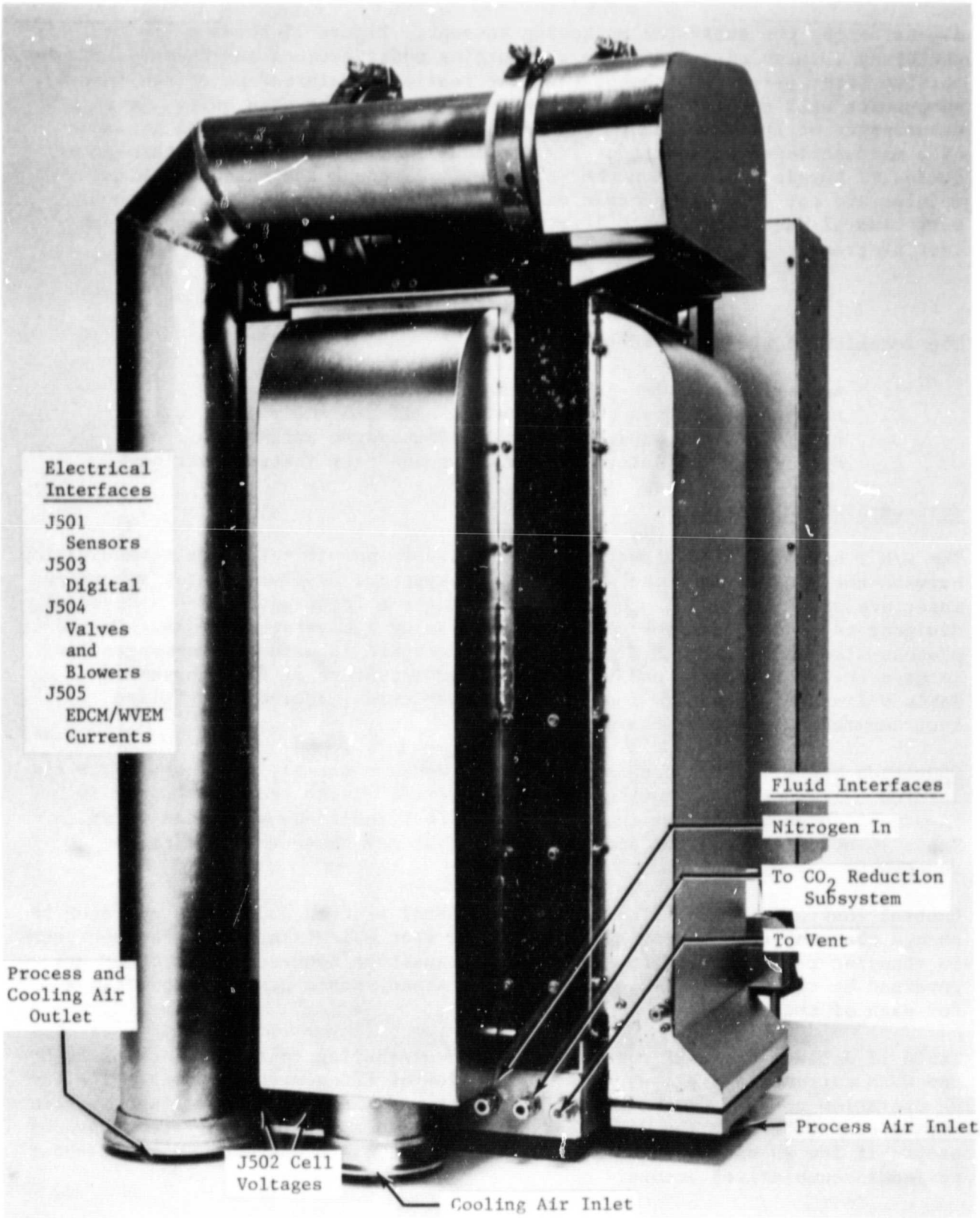

FIGURE 12 IARS MECHANICAL HARDWARE (REAR VIEW OF INITIAL DESIGN)

demonstrating the subsystem packaging concept. Figure 13 shows a layout photograph, which also indicates the ducting modifications subsequently incorporated after pre-refurbishment checkout testing. Maintenance of the subsystem components will require access to the front of the subsystem only. In situ maintenance of the electrochemical cells, which enables electrical isolation of a malfunctioned cell without its physical removal, is provided through a series of toggle switches on the subsystem. Although the electrochemical modules are not line replaceable units provisions have been made for their easy removal and replacement, if required, during the overall preprototype test program.

Control/Monitor Instrumentation

The function of the C/M I is to provide:

1. Automatic mode and mode transition control.
2. Automatic shutdown provisions for self-protection.
3. Provisions for monitoring typical subsystem parameters.
4. Provisions for interfacing with ground test instrumentation.

Instrumentation Design

The C/M I hardware and software are organized to permit real-time communication between the operator and the mechanical subsystem. On the operator/subsystem interface side, the C/M I provides the operator a front panel with a keyboard designed to accept operator commands and display subsystem messages. On the process side an analog and digital interface board is used for communication between the minicomputer and the sensors and actuators of the subsystem. Table 9 lists the IARS C/M I design characteristics, including detailed instrumentation computer characteristics.

Operation Modes. There are four operating modes - normal, shutdown, purge and derated - and one nonoperating mode - unpowered. These are illustrated in Figure 14 which also shows the allowable mode transitions which can occur. Table 10 defines each mode and the action that may cause the mode to be reached.

Control Instrumentation. The subsystem control section allows the operator to change the subsystem operating mode and the vent selection. When the subsystem is changing from one mode to another the transition sequences that occur are governed by the C/M I. Table 11 lists the steady-state actuator conditions for each of the modes.

Table 12 defines the IARS controls. The power-sharing control maintains EDCM and WVEM currents and allows 100% utilization of EDC-generated power. The low RH operation control determines WVEM current and the EDCM cell voltage setpoints during operation over the 26 to 35% RH range. An automatic subsystem shutdown occurs if low RH operation of greater than or equal to one hour in any 24-hour period (accumulative) occurs.

ORIGINAL PAGE
BLACK AND WHITE PHOTOGRAPH

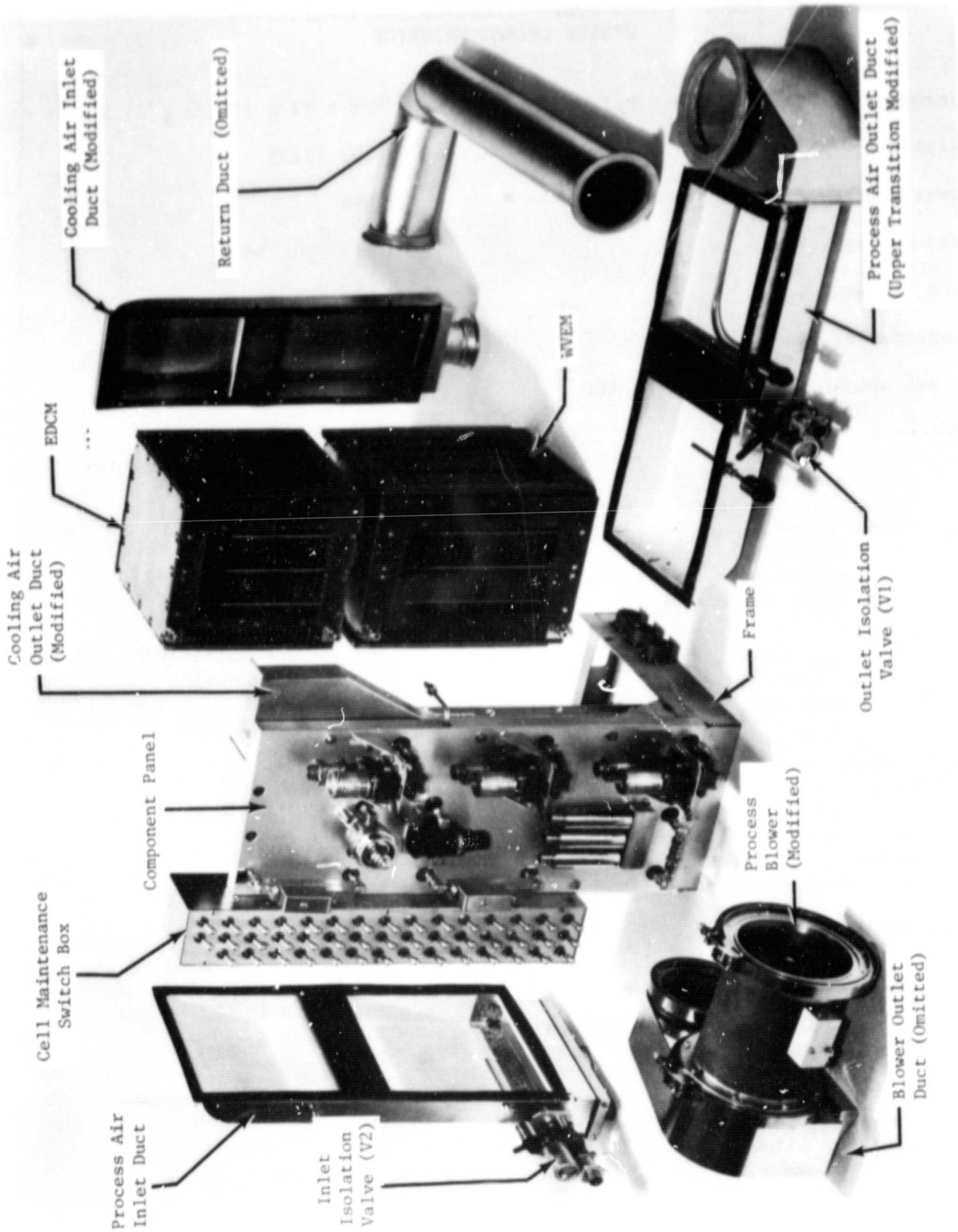

FIGURE 13 IARS LAYOUT

TABLE 9 IARS CONTROL/MONITOR INSTRUMENTATION DESIGN CHARACTERISTICS

Dimensions (Depth x Width x Height), cm (in)	53 x 53 x 73 (21 x 21 x 29)
Weight, kg (lb)	102 (225)
Power Consumption, W	696
Line Voltage, V	115/200, 3Ø
Line Frequency, Hz	400 and 60
Input Sensor Signal Range, VDC	0 to 5
Output Actuator Signal Range, VDC	0 to 5
Processor	
Type of Computer	CAI LSI-2/20 Minicomputer
Word Size, Bits	16
Memory Size, K Words of Core	16
Memory Speed, ns	1,200
Instruction Cycle Time, ns	150
I/O Transfer Rate, Megawords/s	1.67
Other Important Features	• Real Time Clock • DMA Channels • Hardware Multiply/Divide • Stack Processing • Automatic and Blocked I/O • Power Fail Restart
Input/Output	
Number of Analog Inputs	25
Number of Analog Outputs	2
Number of Digital Inputs	12
Number of Digital Outputs	16
Transfer Rate, Megawords/s	1.67
Front Panel	
Command Inputs	Pushbutton Switches
Message Display	(a) Color-Coded Indicators and (b) 9 in CRT Display
Display CRT Capacity, characters	1,920 (80 x 24)
Number of Manual Overrides	18
Operating Modes	
Number of Operating Modes	4
Number of Allowable Mode Transitions	9

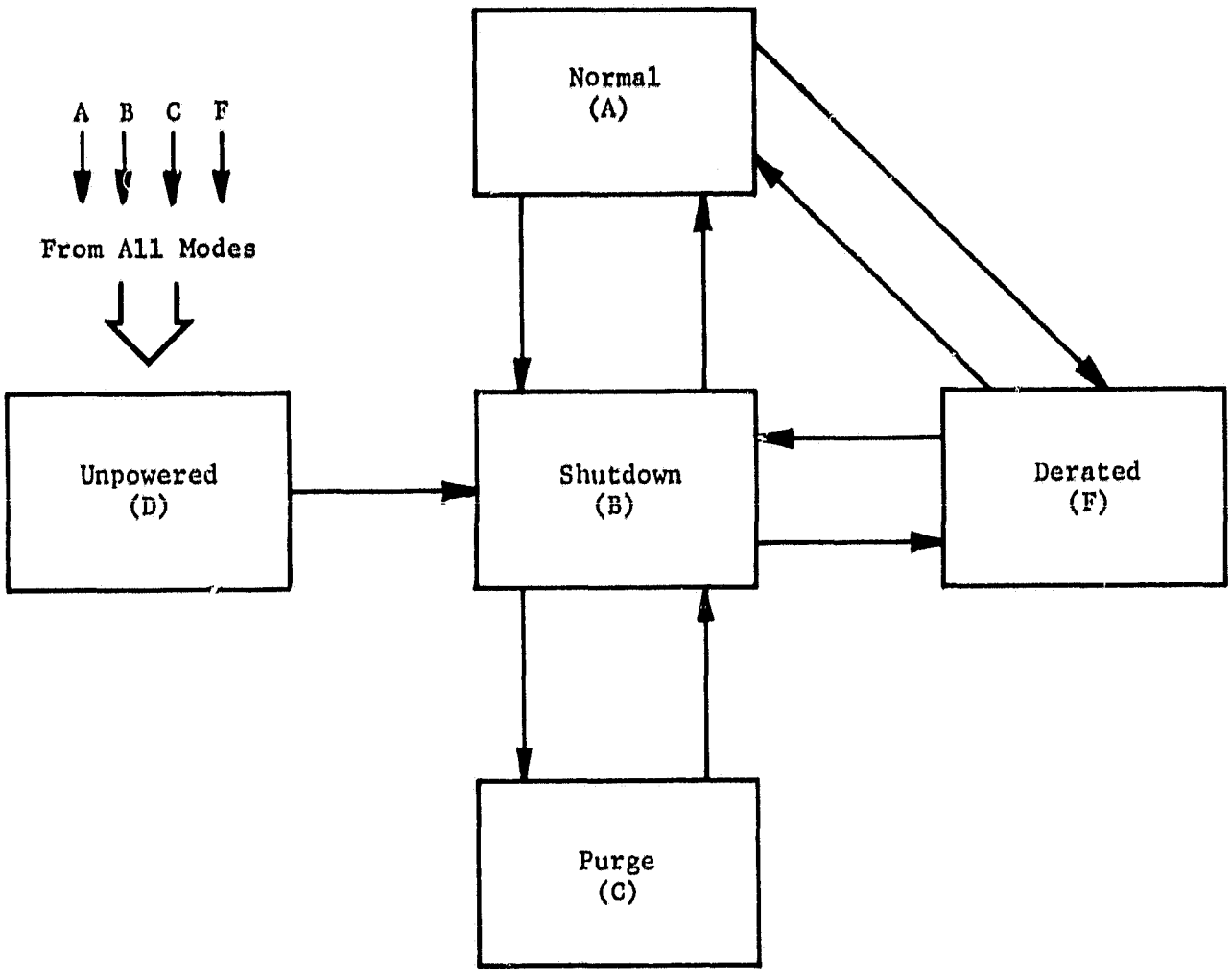

- 5 Modes
- 4 Operating Modes
- 13 Mode Transitions
- 9 Programmable, Allowed Mode Transitions

FIGURE 14 IARS MODES AND ALLOWABLE MODE TRANSITION

TABLE 10 MODE DEFINITIONS

Mode (Code)	Definition
Shutdown (B)	The IARS is not generating O_2 nor removing CO_2. The process air blower is off, module currents are both zero and all valves are closed. The system is powered and all sensors are working. The Shutdown Mode is called for by: • Manual actuation • Low EDCM cell voltage • High WVEM cell voltage • Low H_2 pressure • High H_2 pressure • High EDCM temperature • High WVEM temperature • Low inlet air RH • High inlet air RH • Second failure of triple redundant sensors for inlet air temperature (TS1), EDCM air outlet temperature (TS2), or WVEM air outlet temperature (TS3). • Power on reset (POR) from Unpowered Mode (D) • Mode transition from Shutdown Mode (B) to Normal (A), Derated (F), or Purge (C) was not successful. All transitions to the Shutdown Mode except POR include a timed purge sequence as part of the mode transition sequence. • Cumulative operation of $\geq$1 h in any 24-h period at <35% RH • High current leakage to ground
Normal (A)	The IARS is performing its function of removing CO_2 and generating O_2 at a three-person rate. The H_2/CO_2 mixture is being sent to the CO_2 Reduction Subsystem (CRS) or overboard vent. The Normal Mode is called for by: • Manual actuation • Incomplete transition from Normal (A) to Derated (F) Mode
Derated (F)	The IARS is performing its function of removing CO_2 and generating O_2 at a one-person rate. The H_2/CO_2 mixture is being sent to the CRS or overboard vent. The Derated Mode is called for by: • Manual actuation • Incomplete transition from Derated (F) to Normal (A) Mode

continued-

Table 10 - continued

Mode (Code)	Definition
Purge (C)	The IARS is being purged with N_2 through all H_2 lines, H_2 carrying module cavities and out through PR1 and V5 to the overboard vent line. Module currents and the process air blower are off. This is a continuous purge until a new mode is called for. The Purge Mode is called for by: • Manual actuation
Unpowered (D)	No electrical power is applied to the IARS. Actuator positions can only be verified visually. There will be no process air flow. There could be N_2 purge flow depending on when the IARS was unpowered. The Unpowered Mode is called for by: • Manual actuation (circuit breaker in TSA) • Electrical power failure • Supplementary Shutdown Controller

TABLE 11 DESIGN ACTUATOR CONDITIONS FOR IARS OPERATING MODES

Operating Mode	Motor Operated Valves					Electrochemical Modules				Blower
						EDCM		WVEM		
	Motor Operated Valves									
	V1	V2	V3	V5	V6	Current	No. of Cells	Current	No. of Cells	B1
Shutdown (B)	Closed	Closed	Closed	Closed	Closed	Off	20	Off	24	Off
Normal (A)	Open	Open	Closed	Closed[a]	Open[a]	Full	20	Full	24	On
Derated (F)	Open	Open	Closed	Closed[a]	Open[a]	Full	7	1/3	24	On
Purge (C)	Open	Open	Open	Open	Closed	Off	20	Off	24	Off
Unpowered (D)	(b)	(b)	(b)	(b)	(b)	Off	20	Off	24	Off

(a) Valve position indicated for CRS interface
(b) Variable positions

Life Systems, Inc.

TABLE 12 IARS NORMAL MODE CONTROL DEFINITION

Control	Controlled Parameter	Description	Actuator(s)	Sensor(s)[a]	Set-Point(s)	Adjustable Setpoint Range
1. Power Sharing	EDCM Current, WVEM Current	Controls constant current to EDCM and WVEM using the EDCM generated power. The WVEM current must always equal 2.4 times the EDCM current.	Power Supply/ Controller	I1, I2	WVEM: 22.3A EDCM: 9.3A	WVEM: 0-25A EDCM: 0-15A
2. Low RH Operation	WVEM Current, EDCM Cell Voltage Set-points	At inlet process air RH of <35% WVEM current is reduced as a function of RH (I (Amps) = % RH -16). Also, the setpoints for monitoring EDCM individual cell voltages are reduced. Automatic subsystem shutdown occurs if low RH operation of ≥1 hour in any 24-hour period (accumulative). WVEM current must be ≥1.3 times EDCM current.	Power Supply/ Controller	I2, D1, TS1	f(RH)	WVEM: 12-19A

(a) See Figure 10, IARS Schematic

Life Systems, Inc.

Monitor Instrumentation. The subsystem monitoring section allows the operator and the control section of the subsystem to trace and monitor operational parameters. The C/M I monitors subsystem pressures, flow rates, temperatures, voltages, currents, valve positions and fan speed. The parameters that are monitored during all operating modes are listed in Table 13. The quantity of sensors used to monitor the parameters and each sensor's unit symbol are also listed. A parametric display list - second page function - for the C/M I is provided in Table 14.

Hardware Description

A summary of the IARS C/M I component's weight, power and volume is given in Table 15. The C/M I hardware, excluding interface cabling, is contained in a 53 x 53 x 73 cm (21 x 21 x 29 in) enclosure. Included within the enclosure are the signal conditioning, the power supplies, the computer and the analog/digital interface circuitry, as shown in Figure 15, the IARS C/M I hardware block diagram.

Power is supplied to the C/M I in the form of both 60 Hz and 400 Hz AC and 56 V DC. Internal power supplies convert this power to +24 VDC, ±15 VDC and +5 VDC power. The +24 VDC power supply is used for actuator control. The +5 and ±15 VDC power supplies are used in the signal conditioning circuits. The 56 VDC power is used by the power-sharing current controller along with EDCM power, to supply power to the WVEM.

The signal conditioning circuits consist of printed circuit cards that accept the sensor signals and condition them to 0 to 5 VDC. A signal conditioning circuit is required for each sensor except the pressure sensors, which have signal conditioning built into them. The signal conditioning outputs are applied to the analog/digital (A/D) board, which digitizes the sensor signal for scanning by the computer.

The IARS automatic C/M I is minicomputer-based. The minicomputer of the C/M I consists of a 16-Bit Central Processing Unit (CPU), 16K core of memory, a Real-Time Clock, Power-Fail control circuits, a communication link to an external Data Acquisition System (DAS) and a communication line to a line printer. The CPU executes the control/monitor programs stored in the 16K core of memory. The Real-Time Clock allows the programs to be executed on a real-time basis. The Power-Fail control circuits allow the computer to detect and differentiate between a short-term power interruption (0.1 to 5 sec, adjustable) and a long-term power failure (exceeding 0.1 to 5 sec). The communication link to the DAS allows the sensor data to be recorded on the DAS. The line printer communication link allows the operator/subsystem messages displayed on the CRT to be printed on the line printer.

Figure 16 shows the advanced operator/subsystem front panel of the IARS C/M I. All commands, control and status information of the IARS are communicated through this panel.

The operator/subsystem front panel is subdivided into three distinct sections:

TABLE 13 IARS SENSOR LIST

Description	Quantity	Redundancy Level	Sensor Units
EDC Cell Voltage	20	1	V
EDCM Current	1	1	A
WVE Cell Voltage	24	1	V
WVEM Current	1	1	A
Air Inlet Dew Point	1	1	F
Air Inlet Temperature	1	3	F
EDCM Outlet Air Temperature	1	3	F
WVEM Outlet Air Temperature	1	3	F
Valve Position Indicator	5	1	-
N_2 Purge/WVEM H_2 Pressure	1	1	psig
H_2 Inlet Pressure to EDCM	1	1	psig
H_2/CO_2 Outlet Pressure from EDCM	1	1	psig
H_2 Flow from WVEM	1	1	cc/min
H_2/CO_2 Flow from EDCM	1	1	cc/min
Fan Speed	1	1	rpm

TABLE 14 IARS PARAMETRIC DISPLAY LIST - SECOND PAGE

Description	Quantity	Schematic Symbol	Sensor Code For CRT Sensor Display	Symbol For Units: Engineering	Symbol For Units: CRT Display
EDC Cell Voltage	20	E1-20	E1-20	V	V
EDCM Current	1	I1	I1	A	A
WVE Cell Voltage	24	E21-44	E21-44	V	V
WVEM Current	1	I2	I2	A	A
Air Inlet Dew Point	1	D1	D1	F	F
Air Inlet Temperature	1	TS1	T1	F	F
EDCM Outlet Air Temperature	1	TS2	T2	F	F
WVEM Outlet Air Temperature	1	TS3	T3	F	F
Valve Position Indicator[a]	5	W1-3,W5-6	N/A	N/A	
N/A					
N_2 Purge/WVEM H_2 Pressure	1	P1	P1	psig	PSIG
H_2 Inlet Pressure to EDCM	1	P2	P2	psig	PSIG
H_2/CO_2 Outlet Pressure from EDCM	1	P3	P3	psig	PSIG
H_2 Flow from WVEM	1	F1	F1	cm^3/min	CC/M
H_2/CO_2 Flow from EDCM	1	F2	F2	cm^3/min	CC/M
Fan Speed	1	S1	S1	rpm	RPM
EDCM Outlet-Process Air Inlet Temperature[b]	1	N/A	T4	F	F
WVEM Outlet-Process Air Inlet Temperature[c]	1	N/A	T5	F	F
Outlet Relative Humidity	1	N/A	R1	RH	RH
Total Operating Time[d]	1	N/A	Z1	hr	HR
Time Since Last Shutdown[d]	1	N/A	Z1	hr	HR
Time at F35% RH/24 Hour Period	1	N/A	Z3	min	MIN
Time When Shutdown Occurred	1	N/A	Z10	hr	HR
Total Time in Normal Mode	1	N/A	Z11	hr	HR
Total Time in Shutdown Mode	1	N/A	Z12	hr	HR
Total Time in Purge Mode	1	N/A	Z13	hr	HR
Total Time in Derated Mode	1	N/A	Z15	hr	HR
Total Time on C/M I[d]	1	N/A	Z20	hr	HR
Total Time on EDCM[d]	1	N/A	Z21	hr	HR
Total Time on WVEM	1	N/A	Z22	hr	HR
Total Time on Process Air Fan	1	N/A	Z23	hr	HR
Total Time on Process Air Filter	1	N/A	Z24	hr	HR

(a) Not displayed on first or second page of On-Line Display.
(b) T2-T1 = T4
(c) T3-T1 = T5
(d) Continuously displayed on first page in addition to typical sensor access.

TABLE 15 IARS CONTROL/MONITOR INSTRUMENTATION DESIGN COMPONENT SIZE, WEIGHT AND POWER SUMMARY

Component	Component Dimension, H x W x D, cm (in)	Volume, m^3 (ft^3)	Weight, kg (lb)	AC Power, W (a)	DC Power, W (b)
Instrument Enclosure	72.60 x 53.3 x 53.3 (28.60 x 21.0 x 21.0)	0.210 (7.30)	22.7 (50)	---	---
LSI-2/20 Computer and Accessories	22.10 x 25.4 x 49.8 (8.70 x 10.0 x 19.6)	0.028 (0.99)	9.1 (20)	148	---
CRT Display	17.80 x 22.9 x 25.4 (7.00 x 9.0 x 10.0)	0.010 (0.36)	13.6 (30)	36	---
Display Controller	13.30 x 48.3 x 29.8 (5.25 x 19.0 x 11.7)	0.019 (0.68)	8.6 (19)	70	---
Front Panel Interface	12.70 x 22.9 x 7.6 (5.00 x 9.0 x 3.0)	0.002 (0.08)	4.1 (9)	22	---
Front Panel Switches, Total 53	2.00 x 3.0 x 3.3 (0.80 x 1.2 x 1.3)	0.001 (0.04), ea.	2.3 (5)	3	---
Front Panel Lamps, Total 23	- - - -	---	0.5 (1)	30	---
Intelligent Cables, Total 2	22.90 x 10.2 x 2.5 (9.00 x 4.0 x 1.0)	0.001 (0.02), ea.	0.9 (2)	8	---
Power Supplies (5 V, ±15 V, 28 V)	15.20 x 15.2 x 48.3 (6.00 x 6.0 x 19.0)	0.010 (0.40)	18.2 (40)	131	---

continued-

(a) 115/200 VAC, 400 Hz, 3Ø Power and 115 V, 60 Hz, 1Ø
(b) 56 ±2.5 VDC

Life Systems, Inc.

Table 15 - continued

Component	H x W x D, cm (in)	Volume, m^3 (ft^3)	Weight, kg (lb)	AC Power,[a] W	DC Power,[b] W
Signal/Power Conditioners	15.20 x 15.2 x 38.1 (6.00 x 6.0 x 15.0)	0.009 (0.31)	13.6 (30)	25	163
Recessed Override Switch Panel	19.10 x 22.9 x 10.2 (7.50 x 9.0 x 4.0)	0.005 (0.16)	2.3 (5)	---	---
Connectors and Harness	- - - -	---	4.6 (10)	---	---
Fans, Total 3	12.70 x 12.7 x 5.1 (5.00 x 5.0 x 2.0	---	1.8 (4)	60	---
Total	72.60 x 53.3 x 53.3 (28.60 x 21.0 x 21.0) (Envelope)	0.210 (7.30)	102.0 (225)	533	163

Life Systems, Inc.

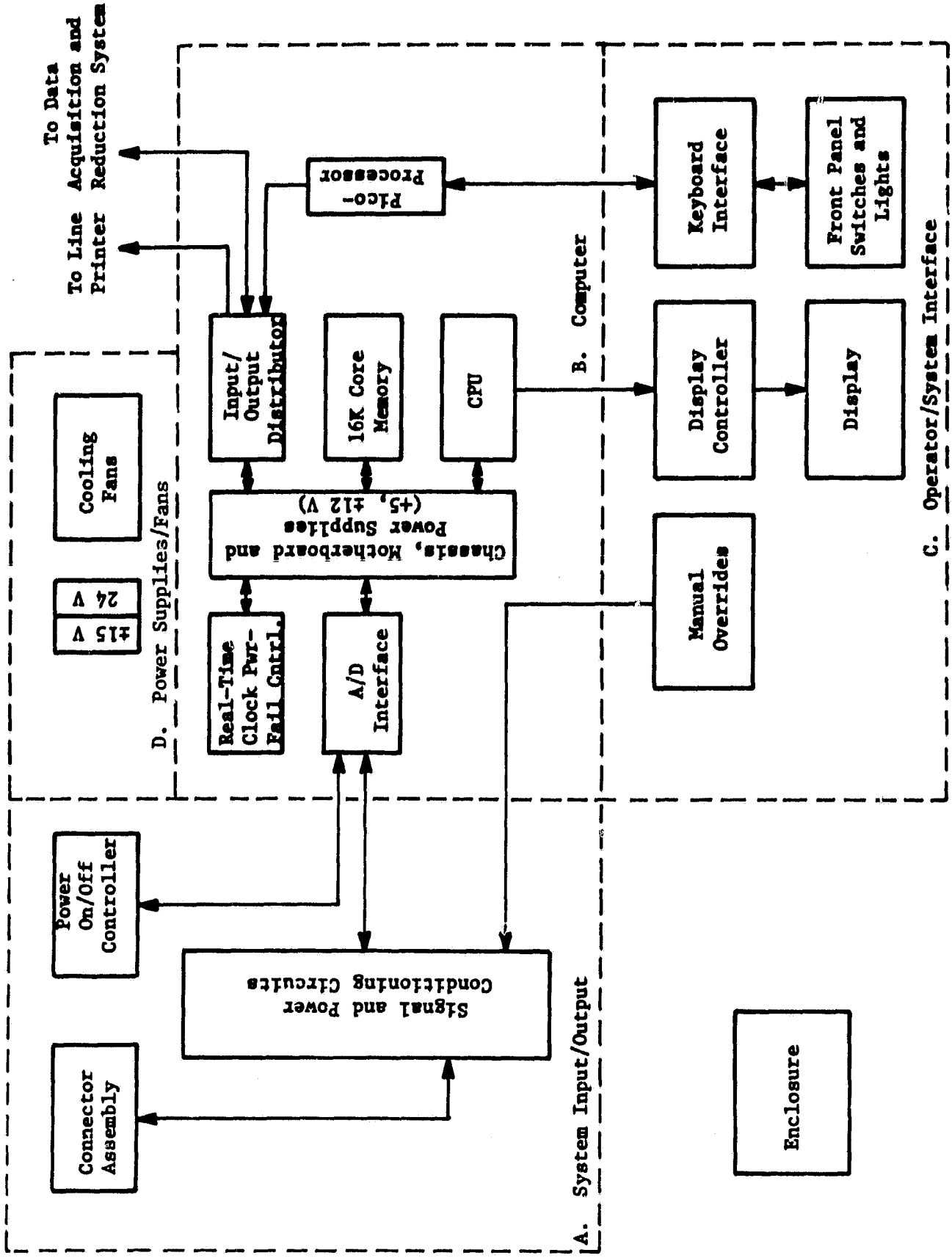

FIGURE 15 C/M I HARDWARE BLOCK DIAGRAM

ORIGINAL PAGE
BLACK AND WHITE PHOTOGRAPH

FIGURE 16 C/M I OPERATOR/SUBSYSTEM FRONT PANEL

1. Subsystem Status - normal, caution, warning and alarm indicators and CRT display for operator/subsystem messages, such as monitor commands, control setpoints and maintenance instructions.

2. Subsystem Control - operating modes/commands, control status indicators, auto protection switches, actuator override switches and actuator controls (located behind front panel door).

3. Operator commands - five operations, five functions, fourteen sensor/actuator types, fifteen data/code entries.

Figure 17 shows the rear panel of the IARS C/M I. It shows the panel-mounted connectors for the sensors, TSA, actuators (valves, blowers, and EDCM/WVEM currents) and for power input. It also shows the access to the CRT display driver subassembly (middle section) and the rear of the minicomputer for maintainability of the plug-in circuit cards.

Software Description

The software of the instrumentation can be divided into two portions: (1) Control and Monitor Modules, and (2) Communication Modules for subsystem/operator interface and data acquisition functions. The software structure is shown in Figure 18. The control and monitor modules are run under the direction of a Real-Time Executive (RTE) software routine. The software RTE handles the automatic scheduling of the following modules: mode transition control, operating mode control, process parameter control, fault detection and trend analysis and input/outout.

The process parameters monitored for subsystem performance and static trend analysis include EDC voltages, WVE voltages, EDCM current, WVEM Current, RH, temperatures, temperature differentials, pressures, flows, dew point and blower speed. The static trend analysis compares a parameter reading with setpoints that indicate Caution, Warning, and Alarm thresholds. Visual displays indicating whether a parameter is in the Normal, Caution, Warning or Alarm range are provided on the front panel.

The process operating mode control is a relatively complex operation. It includes selection of different operating modes, selection of valve positions, sequencing of valves, sequencing of actuators and checking parametric conditions as mode transition proceed. This procedure for control is fully automated by the C/M I so that the operator only needs to press a mode change request buttons to initiate transition sequences.

PRODUCT ASSURANCE PROGRAM

The Product Assurance Program encompassed the activities associated with Quality Assurance, Reliability, Safety, Materials Control and Maintainability.

Quality Assurance

The Quality Assurance activities for the IARS consisted of the following:

ORIGINAL PAGE
BLACK AND WHITE PHOTOGRAPH

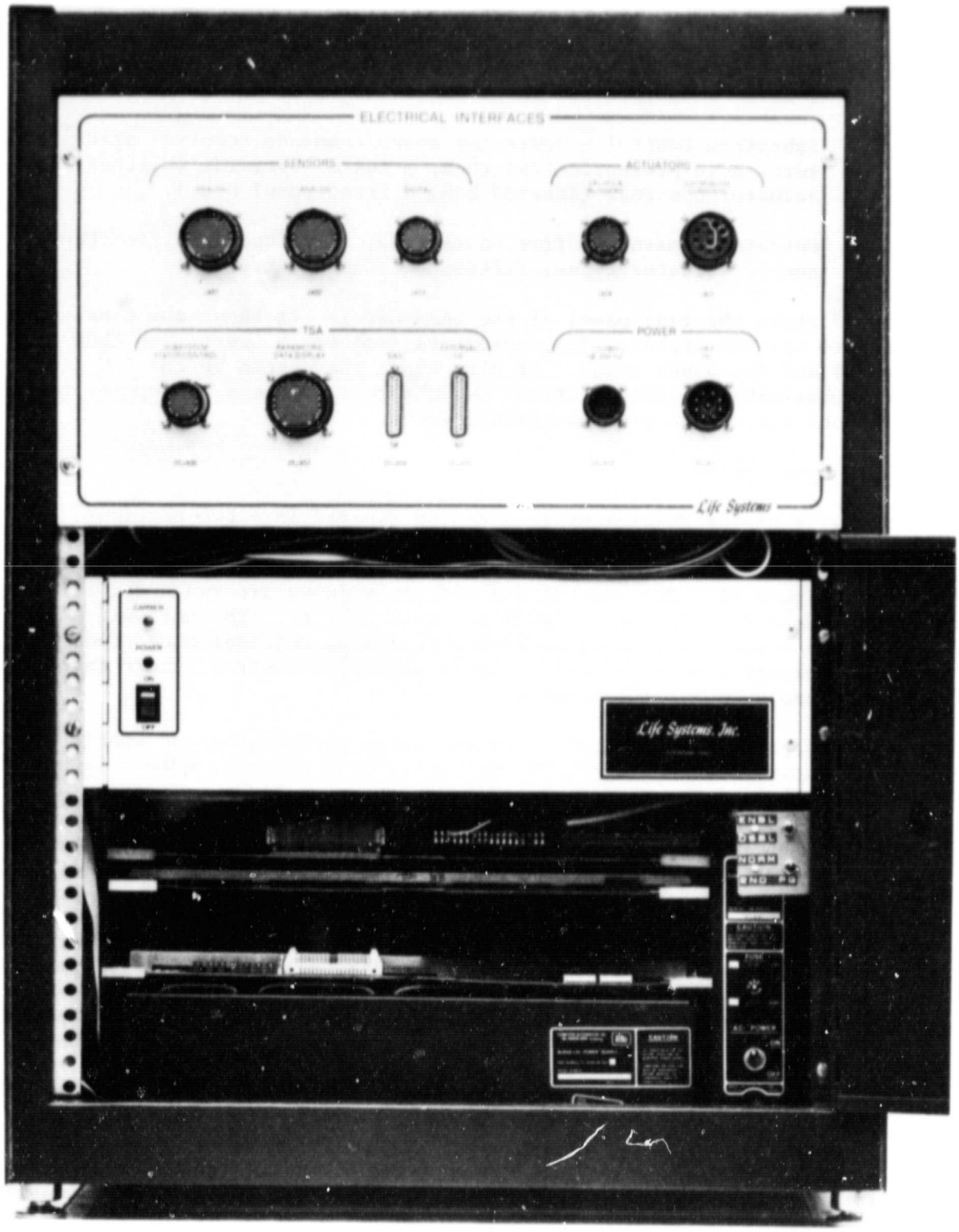

FIGURE 17 C/M I ENCLOSURE (REAR VIEW)

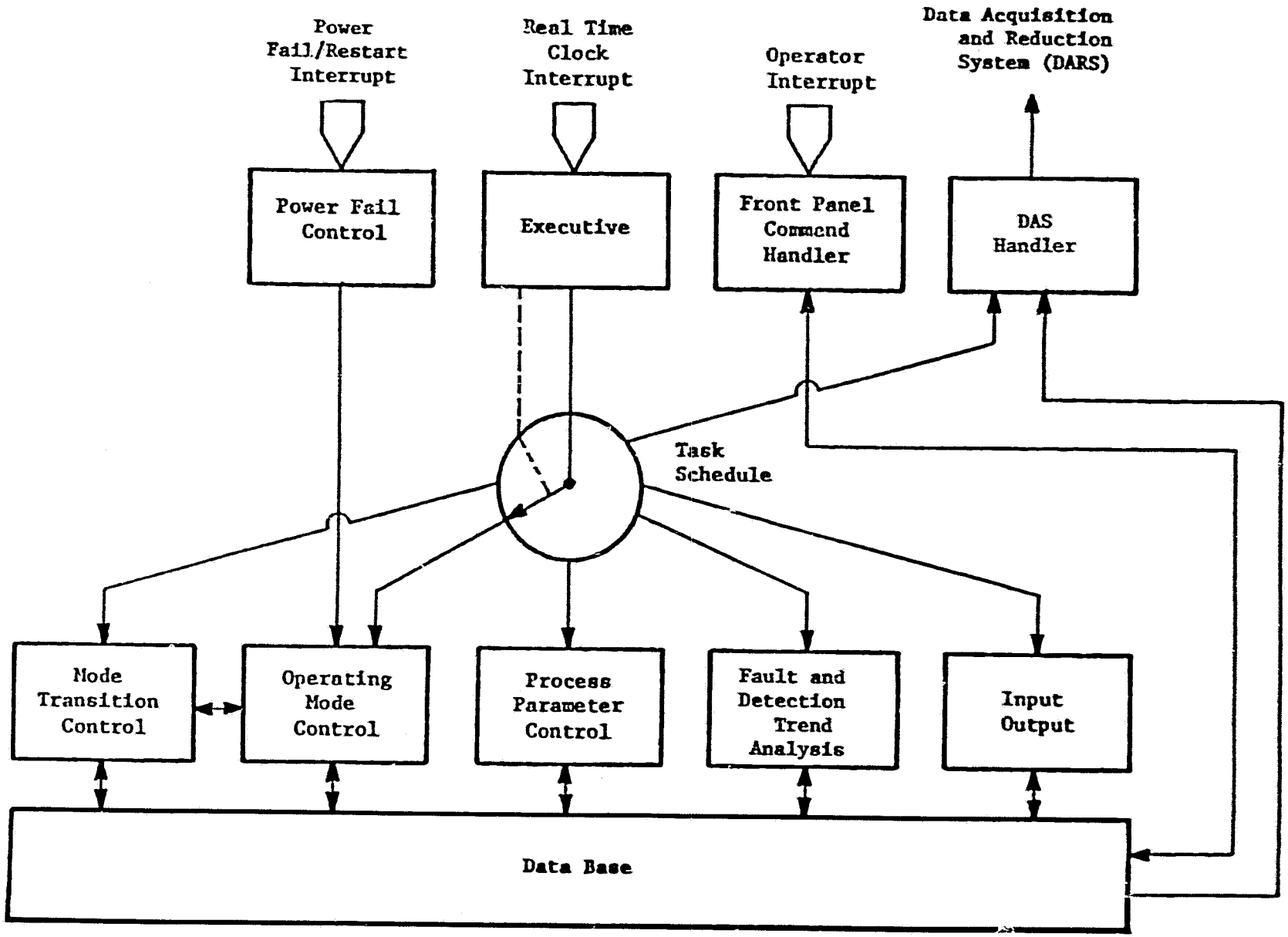

FIGURE 18 C/M I SOFTWARE BLOCK DIAGRAM

Life Systems, Inc.

1. Participation in the design phase of the program to search out quality weaknesses and recommend appropriate corrective measures.

2. Participation in design activities to ensure that the Quality Assurance inputs were included in design studies, trade-off analyses, engineering assessments and interface requirements.

3. Performance and documentation of receiving, in-process and final inspection of all IARS components.

4. Ensuring configuration control by monitoring the drawing and change control procedures.

5. Monitoring subsystem checkout, shakedown, design verification and endurance tests.

6. Controlling failure/problem reporting for the testing phase of the IARS program.

Reliability

The reliability tasks accomplished consisted of performing a Failure Modes and Effects Analysis (FMEA) and identifying single failure points. The FMEA presents all hypothesized equipment failure modes and describes the effects of each failure mode on individual components, subsystem and system. The analysis also describes the failure detection method and crew action required to correct a component failure. The FMEA identifies safety hazards and single failure points and was used to verify subsystem instrumentation requirements. An example of an FMEA is presented in Figure 19.

The only failure mode which results in a single failure point is that which would cause external leakage of H_2 into the cabin. It was recommended that triple redundant combustible gas detectors be mounted at strategic locations within the cabin in the vicinity of the H_2 bearing subsystems so that they would be able to detect H_2 leaks. It was recommended that a subsystem shutdown be initiated if any of the sensors indicate greater than 1% H_2 in the air. It was also recommended that the shutdown be preceeded by Caution and Warning alarm points which would occur at 0.5% and 0.75% H_2, respectively. The Caution and Warning alarm would allow the crew sufficient time to take corrective action relative to H_2 leakage before subsystem shutdown would occur and long before a hazardous combustible gas concentration would be reached.

Maintainability

The maintainability activities performed in conjunction with the development of the IARS were:

1. Participation in the design and mock-up reviews to ensure that the maintenance and packaging considerations listed in the design report were adhered to.

2. Preparation of a Familiarization/Operation and Maintenance/Repair Manual for the IARS.

Life Systems, Inc. CLEVELAND, OHIO 44122	FAILURE MODE, EFFECTS & CRITICALITY ANALYSIS	PAGE 1 OF 2	REVISION LTR.
			DATE 9/14/77

TITLE SENSOR, PRESSURE

☐ SUBSYSTEM ☐ LOOP ☒ COMPONENT

PART NO.	RELIABILITY LOGIC NO.	NAME	FUNCTION
P1	P1	H_2 Pressure Sensor	Measures pressure in H_2 carrying lines.

FAILURE MODE AND CAUSE:

(a) Fails high
(b) Fails low
(c) External leakage

CRITICALITY: N/A

FAILURE EFFECT ON COMPONENT/FUNCTIONAL ASSEMBLY:

(a) Indicates high H_2 pressure when, in reality, high H_2 pressures do not exist; low pressure which may exist is not detected.
(b) Indicates low H_2 pressure when, in reality, low H_2 pressures do not exist; high pressure which may exist is not detected.
(c) H_2 leak into cabin atmosphere.

FAILURE EFFECT ON SYSTEM/SUBSYSTEM:

(a) A subsystem shutdown for high pressure will occur. If the sensor fails high but not high enough to cause an alarm then the capability of the sensor to detect low pressure is lost. This has no effect on the subsystem as the redundant pressure sensors will signal for a low pressure shutdown.
(b) A subsystem shutdown for low pressure will occur. If the sensor fails low but not low enough to cause a warning then the capability of the sensor to detect high pressure is lost. This has no effect on the subsystem as the redundant pressure sensors will signal for a high pressure shutdown.
(c) H_2 is released to the cabin atmosphere causing a combustion hazard. A high combustible gas concentration shutdown may occur. Low H_2 pressure shutdown could also occur if leak is large enough.

FAILURE DETECTION METHOD:

(a,b) Three-sensor voting logic with P1, P2 and P3
(c) High combustible gas concentration CG1, low H_2 flow F1 and F2, low H_2 pressure P1, P2 and P3

CREW ACTION REQUIRED:	TIME REQD.	TIME AVAIL.
(a,b,c) Replace H_2 pressure sensor	0.1 h	1.0 h

FIGURE 19 FMEA EXAMPLE

Safety

The safety program carried out in conjunction with the design and development of the IARS consisted of:

1. Monitoring subsystem and component design for compliance to Life Systems' safety design criteria.

2. Identification of dangerous subsystem characteristics and failure modes. This was done in conjunction with the FMEA performed on the subsystem.

3. Review of the nonmetallic materials and metallic materials lists to assure that personnel and subsystem safety were not impaired by use of unacceptable materials.

4. Review of designs and design changes for potential safety problems.

5. Review of NASA Alerts for safety information.

6. Review of test plans and procedures to ensure that safety precautions were included.

7. Review of failure/problem reports to assure that corrective action taken did not have a safety impact on the design.

8. Review of the instrumentation design to assure that failure detection mechanisms and warnings were provided for all failures that could have a safety impact on crew or the subsystem.

Materials Control

The materials control activities consisted of preparing the materials list for each of the IARS Line Replaceable Units (LRU) followed by screening of the materials for acceptability. Both metallic and nonmetallic materials were included.

The acceptability of the nonmetallic materials was based on categories and acceptability criteria listed in DNA 0002, "Procedures and Requirements for the Flammability and Offgassing of Manned Spacecraft Nonmetallic Materials."[19] The acceptability of metallic material was based on (1) an evaluation of the materials compatability with its usage environment (2) an evaluation of each material, considering the effects of processing on the end item application and (3) the list of unacceptable metallic materials that was contained in the Space Station Prototype (SSP) Design Criteria Handbook.[20] Figure 20 is an example of the materials list that was prepared for an IARS LRU. Each material was categorized as described below.

I. Material is Acceptable
II. Material is Unacceptable and Must be Replaced for Flight
III. Material is Unacceptable, Waiver Required or Replacement of Material Required

Life Systems, Inc.
CLEVELAND, OHIO 44122

MATERIAL IDENTIFICATION DATA

☒ LINE REPLACEABLE UNIT ☐ COMPONENT
☐ LINE REPLACEABLE COMPONENT ☐

REVISION LTR.

TITLE: Fan, with Speed Sensor | NO. B1 | - | PAGE OF | DATE 8/11/77

ITEM NO.	QTY. REQ'D.	PER UNIT WT.	PER UNIT AREA	TOTAL WT.	TOTAL AREA	MFGR'S. DESIGNATION	MANUFACTURER	MATL. CODE	FUNCTION	MATL. CAT.	MATL. SPEC.	MATL. CODE NMA	MATL. CODE MMA	REF.
1	1					Aluminum, Anodized	Dynamic Air Eng., Inc.		Propeller	B			I	
2	AR					Paint	Dynamic Air Eng., Inc.		Coating on Propeller	A		III		
3	1					Aluminum, Anodized	Dynamic Air Eng., Inc.		Motor Casing	B			I	
4	1					1010 Steel	Dynamic Air Eng., Inc.		Motor Housing	B			I	
5	AR					Cadmium Plate	Dynamic Air Eng., Inc.		Plating on Housing	B			III	
6	AR					Aluminum, Anodized	Dynamic Air Eng., Inc.		Spacers	B			I	
7	1					416 Stainless Steel	Dynamic Air Eng., Inc.		Motor Shaft	B			I	
8	AR					Copper	Dynamic Air Eng., Inc.		Motor Windings & Wires	B			I	
9	AR					Varnish	Dynamic Air Eng., Inc.		Coating on Motor Winding	E		V		
10	AR					Teflon Mil-W-16878, Type E	Dynamic Air Eng., Inc.		Wire Insulation	B		I		
11	1					Rubber MS-35489-J	Dynamic Air Eng., Inc.		Grommet	B		V		
12	1					Polyester-Acrylic Coated Fiberglass	Dynamic Air Eng., Inc.		Wire Sheath	B		V		
13	AR					1038 Steel	Dynamic Air Eng., Inc.		Bolts and Washers	B			I	
14	AR					Cadmium Plate	Dynamic Air Eng., Inc.		On Bolts and Washers	B			III	
15	1					MS20995C20 CR Steel	Dynamic Air Eng., Inc.		Lock Wire	B			I	
16	1					Nylon	Dynamic Air Eng., Inc.		Strain Relief Clamp	B		III		

FIGURE 20 MATERIALS LIST EXAMPLE

ORIGINAL PAGE IS OF POOR QUALITY

Life Systems, Inc.

IV. Material is Unacceptable but may Pass Configuration Test, Submit Material for Test
V. No Data on Material Available, Submit for Test or Waiver

The purpose of the materials control function was not to replace all unacceptable materials but only to identify those so that on future prototype or flight units these materials could be replaced with acceptable alternatives.

TEST SUPPORT ACCESSORIES

The Test Support Accessories (TSA) required for the preprototype IARS test program are: (1) Fluid Interface Simulation, (2) Electrical Interface Simulation, (3) Parametric Data Display, (4) Data Acquisition System and (5) Analytical Apparatus.

Fluid Interface Simulation

Supply of the spacecraft fluid interfaces is provided by the fluid interface TSA, which is schematically represented in Figure 21. Its primary component is the Air Supply Unit (ASU). The ASU provides temperature, humidity, pO_2 and pCO_2 control of the process air stream that is circulated to and from the preprototype IARS. Control of the CO_2 in the air is provided using solenoid valves and an in-line CO_2-in-air analyzer located within the ASU. The process air pCO_2 is automatically controlled to the desired level by appropriately opening and closing these solenoid valves. Cabin air pO_2 is controlled by a bleed stream that maintains a 22.1 kPa (3.2 psia) pO_2 in the chamber.

Electrical Interface Simulation

The electrical interface is provided by the TSA spacecraft power simulator. The simulator converts three phase, 220 V, 60 Hz AC power into 115 V, 400 Hz AC power and supplies 56 VDC power for use in the subsystem.

Parametric Data Display

The primary function of the parametric data display is to take subsystem and TSA sensor signals and convert them into engineering units for display. This function includes providing an automatic cell scanning capability separate from that provided at the subsystem level.

The following parameters were monitored and displayed as part of the TSA instrumentation.

- Currents for EDCM and WVEM
- Voltages for EDC and WVE modules and individual cells
- Inlet and outlet dew point and dry bulb temperatures
- EDCM H_2/CO_2 outlet[2] pressures and gas flow rate
- WVEM N_2 inlet pressure
- Combustible gas level
- Subsystem AC and DC power input levels

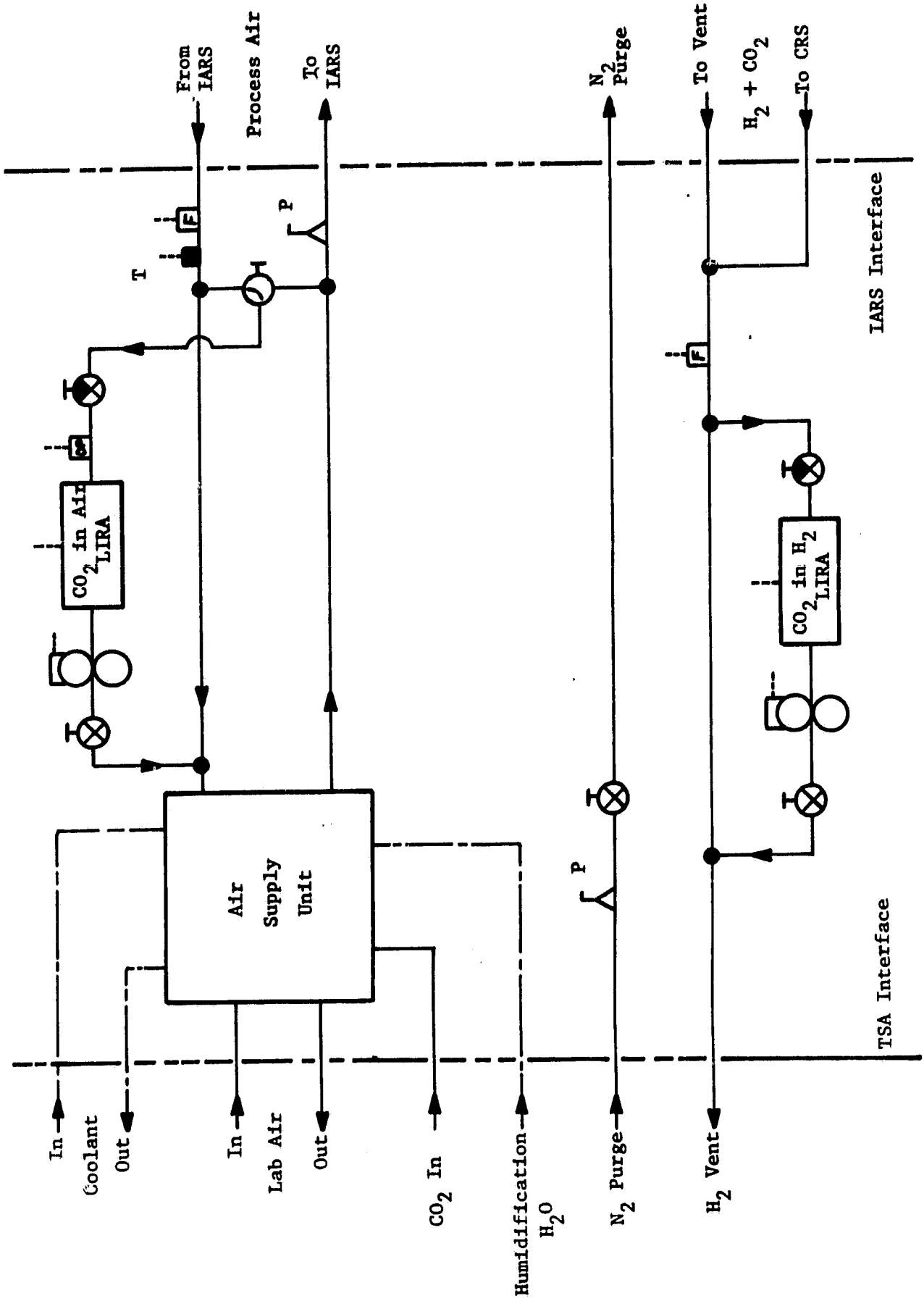

FIGURE 21 PREPROTOTYPE IARS FLUID INTERFACE TSA SCHEMATIC

Data Acquisition System

The Data Acquisition System monitors (1) pCO_2 of the inlet and outlet process air and outlet H_2, (2) process and cooling air flow rates and pressure drops, (3) N_2 purge gas pressure and (4) all parameters of the parametric data display. The parametric values of the TSA and IARS instrumentation were measured using the devices listed in Table 16. The accuracy of each device is also listed along with the location of the measurement.

TEST PROGRAM

The IARS Test Program was designed to evaluate integrated subsystem operation as a function of the two primary operating parameters that affect subsystem performance: process air inlet pCO_2 level and RH. The test program activities were divided into four phases (1) Checkout/Calibration Tests, (2) Shakedown Tests, (3) Parametric/Endurance Tests, and (4) Acceptance Test. Subsystem design and performance evaluation were completed during checkout, shakedown and parametric/endurance testing.

Two similar series of tests were performed, between which the subsystem hardware was significantly refurbished. These test series were therefore designated "pre-refurbishment" and "post-refurbishment," respectively. The two test series differed slightly in that acceptance testing was performed only as part of the post-refurbishment test series.

The pre-refurbishment testing of the IARS is delineated time-wise in Figure 22. Certain alterations of the hardware were performed during the test program, at a level permitted by available funding and as needs were identified. Pre-refurbishment modifications and the bases for those changes are listed in Table 17. Improvements in air throughput, current tab resistivity and end plate integrity, all implemented prior to pre-refurbishment shakedown testing, are discussed further in Appendix 1. Ducting and blower modifications (shown in place of the IARS in Figure 23) and elimination of (1) intermodule electrical discharge and (2) condensation on outer subsystem duct surfaces during shutdown were permanently effective. Measures to reduce current tab resistivity and repair of the end plates, limited then by existing funds, were adequate to complete the pre-refurbishment test series, but were not considered permanent solutions and required further modifications/improvements.

The post-refurbishment testing was performed following institution of permanently effective, engineered replacements for the temporary current tab and end plate alterations, as well as implementation of other subsystem improvements. These major subsystem refurbishment activities are summarized in Table 18. Added brief discussions concerning the end plates and current tabs are presented in Appendix 1. The post-refurbishment period, delineated timewise in Figure 24, included the Acceptance Test as well as other tests similar to the pre-refurbishment series, but no derated testing.

Checkout/Calibration Test

The objective of the IARS checkout/calibration testing was to verify performance and ensure proper calibration of the major IARS components, IARS sensors and

TABLE 16 PARAMETRIC TEST INSTRUMENTATION

Type of Measurement	Type of Instrument	Measurement Location	Expected Accuracy
Temperature	Thermistors[a]	Process air in and out, EDCM out, WVEM out	±1.7 K (3 F)
Dew Point Temperature	EG&G Dew Point[a] Hygrometer Model 880	Process air in and out	±1.1 K (2 F)
CO_2 in H_2, %	LIRA Infrared Analyzer Model 300	EDCM H_2 and CO_2 out	±1%
CO_2 in Air, %	LIRA Infrared Analyzer Model 300	Process air in and out	±1%
Process Air Flow Rate	Flow Transducer and WP Calibration	Process air in	±1%
H_2 and CO_2 Flow Rates	Wet Test Meter	EDCM H_2 and CO_2 out, WVEM H_2 out[b]	±1%
Current	Weston Digital Meter	EDCM and WVEM	±0.1 A
Voltage	Weston Digital Meter	EDC and WVE cells, EDCM and WVEM	±0.002 V
Pressure	Transducer[a]	EDCM H_2 and CO_2 out, WVEM H_2 out, purge N_2 in	±2%
Pressure	Gauge	Process air in and purge N_2	±5%
H_2 Conc. in Air	Combustible Gas Detector	ASU bypass	±2%
Power	Watt Meter	Power to C/M I	±5%

(a) Used both in TSA and subsystem.
(b) Measured occasionally with WVEM only operating and wet test meter connected to WVEM H_2 outlet.

ORIGINAL PAGE
BLACK AND WHITE PHOTOGRAPH

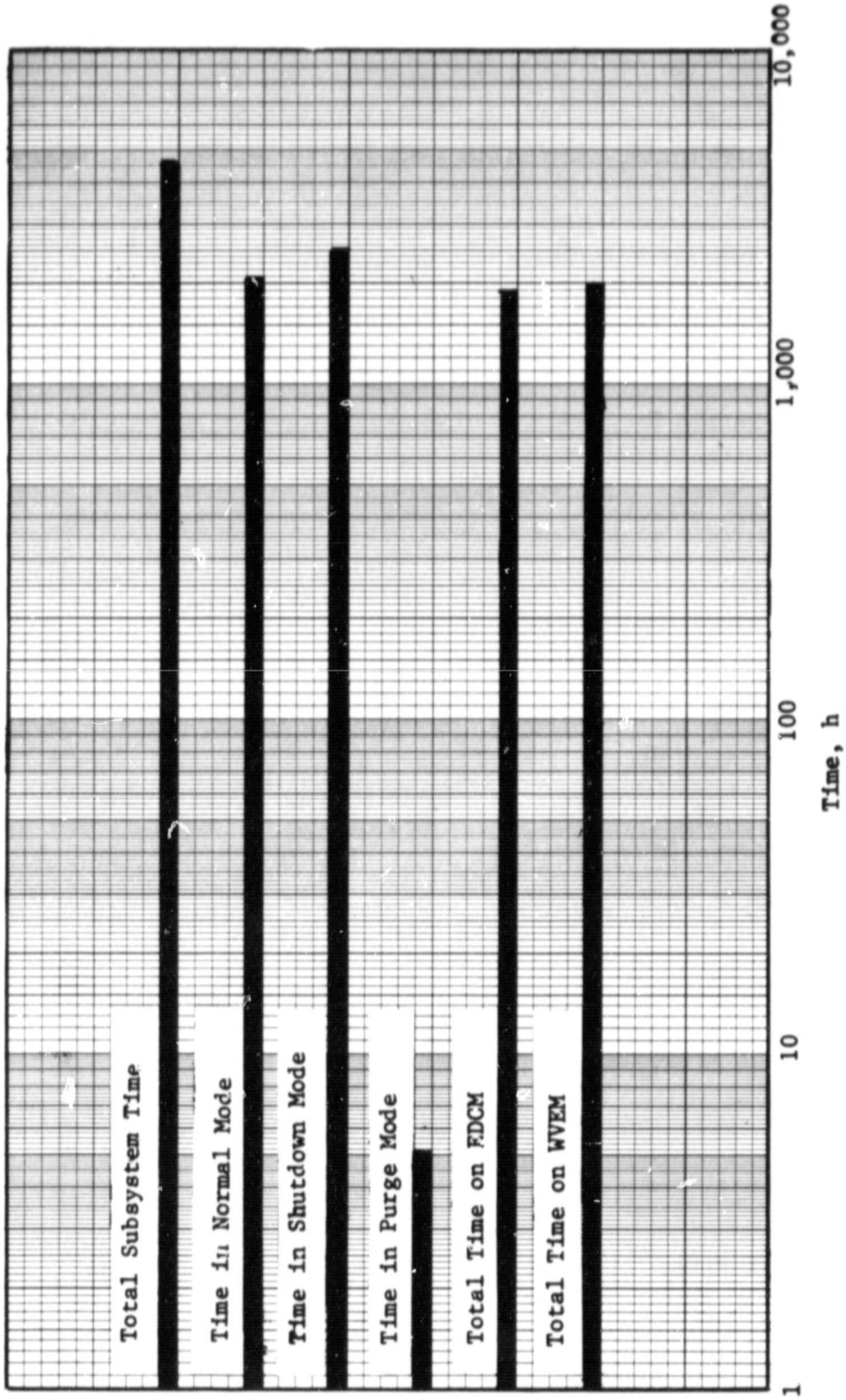

FIGURE 22 SUMMARY OF IARS OPERATING TIMES (PRE-REFURBISHMENT)

TABLE 17 PRE-REFURBISHMENT MODIFICATIONS

Condition	Cause	Modification(s)	Benefits
Insufficient subsystem air throughput (and some air flow maldistribution between modules	Inadequate capacity of blower and high duct resistance (e.g., too too many bends, interfaces too narrow, etc.)	Changed to larger blower, streamlined duct design, enlarged/repositioned the interface flanges, added turning vane to improve intermodule air distribution	Surpassed both process air and total air flow rate goals
High electrical resistivity in WVEM current tabs/connectors and related H_2 leakage along anode tabs	Inadequate tab current capacity and high tab contact resistance caused high IR drops, I^2R heating and consequent frame damage and H_2 leakage	EB welded silver (Ag) tabs to Titanium (Ti) tabs for low contact resistance, sealed the frames around tabs to stop leakage, air cooled the tabs	Reduced IR drops from 100-200 mV to 25 mV Permitted completion of Pre-Refurbishment test series
Honeycomb end plate mechanical failure	Poor epoxy bond between inserts and load-bearing skin due to poor surface preparation (vendor's insufficient knowledge of Carpenter 20 stainless steel etching technique)	Rebonded the end plates	Permitted completion of pre-refurbishment test series
Condensation on external surfaces during shutdown, causing subsequent current leakage to ground and external cell damage	ASU continued to circulate cold air with subsystem in shutdown mode because ASU blower continued to run	Linked ASU shutdown to C/M I shutdown Automatically removed all power when leakage current is detected	Eliminated condensation Provided positive subsystem protection
Restricted EDCM moisture tolerance range due to plaque corrosion	Porous plaque corrosion during shutdown due to reverse discharge between modules, resulting in displacement of electrolyte capacity by corrosion products; corrosion also due to dryout during storage	Added relays to C/M I that electrically isolate modules during subsystem shutdown Ensured sealed module storage technique	Avoided plaque corrosion and subsequent loss of electrolyte capacity in plaques

Life Systems, Inc.

ORIGINAL PAGE
BLACK AND WHITE PHOTOGRAPH

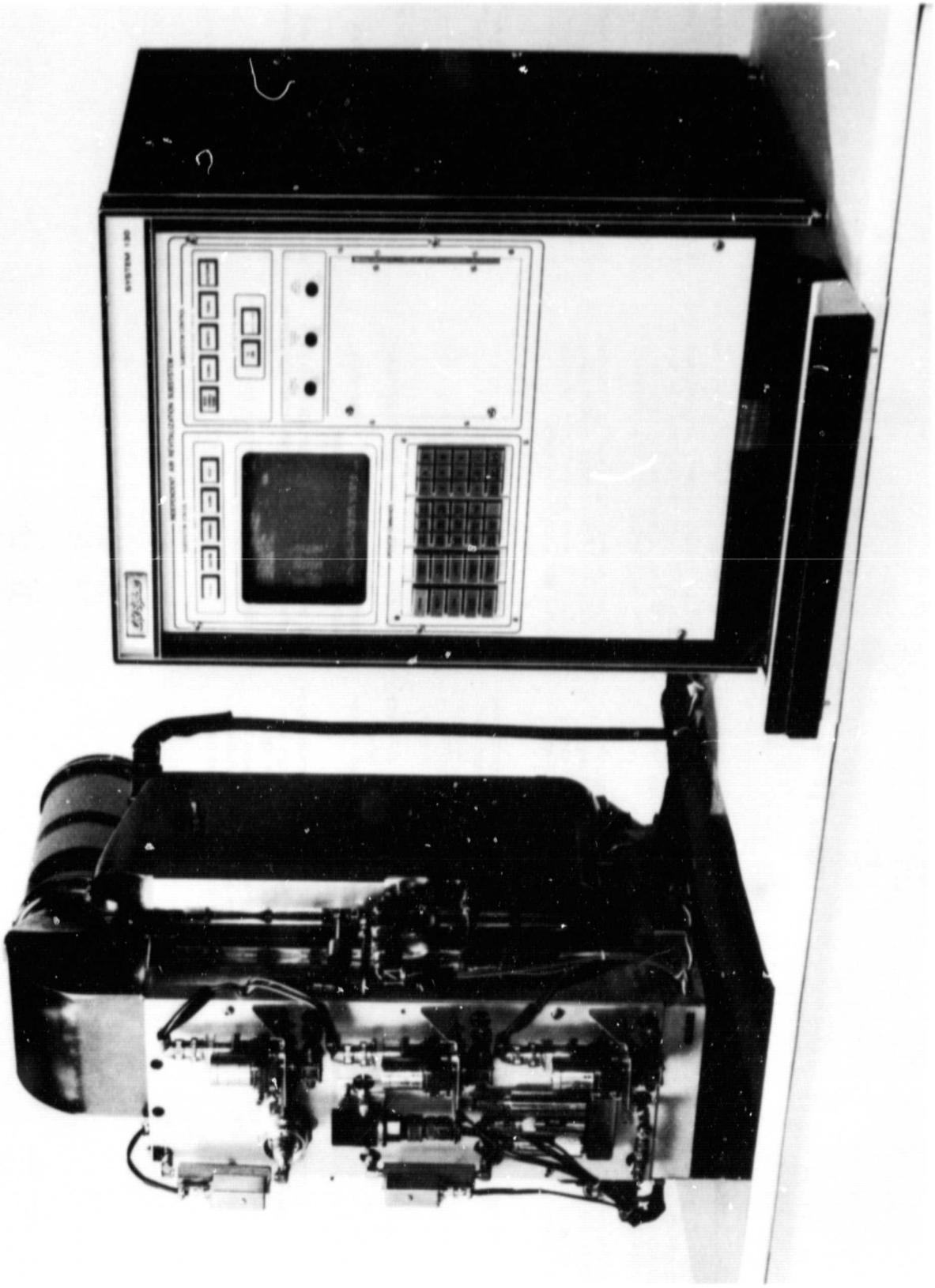

FIGURE 23 IARS AFTER DUCTING MODIFICATION

TABLE 18 IARS REFURBISHMENT

Condition	Cause	Refurbishment	Benefits
Need for permanent cell modifications to further reduce electrical resistivity of WVEM tabs	Inadequate capacity of tab to carry current	Directly injection molded thicker tabs (0.060") of lower resistivity, chemically resistant Tantalum (Ta) into new cell frames and EB welded similar tabs directly to cathode current collectors	Reduced tab resistivity by 85% Maintained cell housing tab location and injection molding technique Maintained corrosion resirtance
	Contact resistance of slip-on type current connectors; close anode-cathode tab proximity prohibited mechanically superior screw-and-nut connections	New current collector tabs were displaced 0.86 inches from cell frame tabs. Used solid Ag screw-and-nut type connection bars	Decreased contact resistance Change in tab location increased area for mechanical inter-cell current collection Maintained basic cell/module configuration
Honeycomb end plate mechanical instability	Poor epoxy bond between inserts and load-bearing skin, due to poor surface preparation (vendor's insufficient knowledge of Carpenter 20 etching technique) and subsequent practicality of providing only temporary repairs	Designed and fabricated nonconductive combination end plate/insulation plate of 30% glass filled polysulfone	Provided permanent end plate integrity Provided intrinsic insulation characteristics Maintained module/IARS overall dimensions Utilized baseline end plate/insulation plate design technique Reduced reduction in number of end plate components Eliminated insert-type construction Eliminated one gasket seal Reduced end plate cost (lower than for stainless steel/polysulfone combination)

continued-

ORIGINAL PAGE IS OF POOR QUALITY

Table 18 - continued

Condition	Cause	Refurbishment	Benefits
(End plate mechanical instability - continued)			Enabled duct mounting directly to end plate Had minimal effect on subsystem weight Produced intrinsic corrosion resistance
Restricted EDCM and WVEM moisture tolerance (RH) range	Improper location of gas-liquid interface of electrolyte in some cells following pressure tests; consequent loss of electrolyte during operation and creation of electrolyte volume nonuniformities	Instituted improved charging technique and recharged the cell after pressure checking to ensure proper volume and location of electrolyte	Provided extended moisture tolerance range Made electrolyte volume tolerances predictable Resulted in maximum electrolyte charge volume and uniform moisture tolerance band for all cells
	For EDCM only, corroded porous plaques, resulting in reduced electrolyte capacity (see Pre-Refurbishment modifications)	Rebuilt EDCM with new porous plaques	Provided full electrolyte capacity and predictable electrolyte volume tolerances
Module current leakage to ground	Current leaked from module through bolts to end plates to air ducts (grounded). Also electrical current leakage to ducts through proximity to exposed current collector edges	Recoated outlet process air duct with nonconductive material such that outer flange area, in contact with end plates and near current collector edges, is insulated	Stopped current leakage while maintaining baseline component design

Life Systems, Inc.

ORIGINAL PAGE IS OF POOR QUALITY

ORIGINAL PAGE IS
OF POOR QUALITY

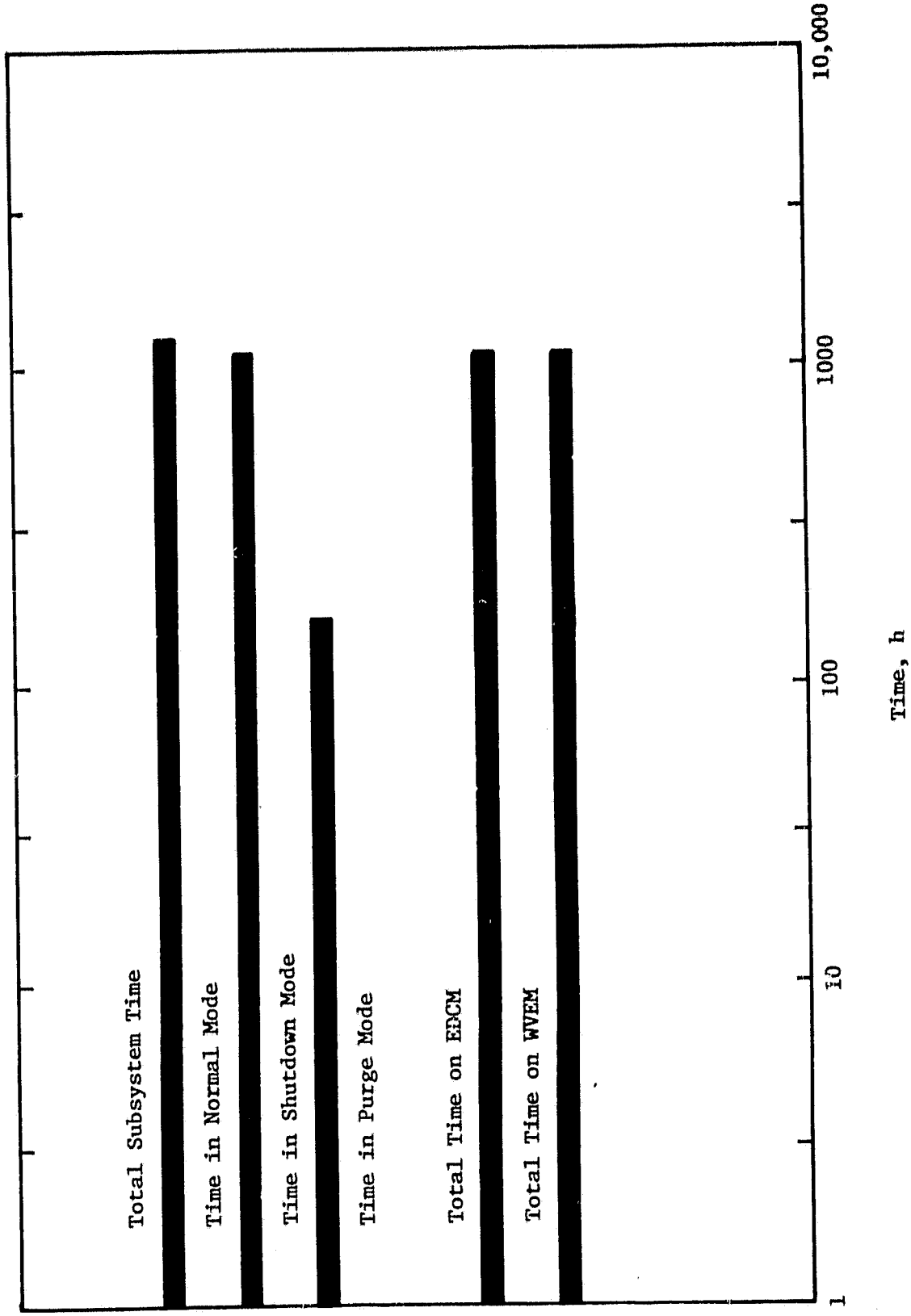

FIGURE 24 SUMMARY OF IARS OPERATING TIMES (POST-REFURBISHMENT)

associated TSA sensors. Checkout of the major IARS components consisted of independent operation and evaluation of the two electrochemical modules, integrated operation of these modules and a series of integrated subsystem startups and shutdowns to verify proper actuator sequencing by the C/M I software through all mode transitions.

Pre-Refurbishment

During this testing the following IARS sensors were calibrated: subsystem pressure transducers, flow meters, orifices, current and voltage measuring devices, dew point sensors and the process air blower. The TSA sensors calibrated included the digital and pancake meter readouts, as well as the fluid supply unit flow meters.

No major software problems were encountered during the checkout of the C/M I. A variety of minor software discrepancies were identified and corrected as they occurred. These were anticipated as part of the checkout test functions of the computer-based C/M I.

During the checkout of the mechanical portion of the IARS hardware, average short-term (startup) EDCM cell voltages were 0.51 V/cell at a current density of 20.0 mA/cm^2 (18.6 ASF). Average WVEM cell voltages at startup were 1.69 V/cell at the design current density of 48.0 mA/cm^2 (44.6 ASF).

Integrated subsystem checkout was initiated after completion of all component checkout testing. Three technical areas that required redesign and/or repair prior to shakedown testing, were identified. These deficiencies, which limited the IARS to operate at a maximum two-person capacity, concerned air throughput capacity, current tab resistivity and end plate integrity, as discussed previously in Table 17 and Appendix 1. Implementation of the appropriate IARS alterations, which successfully supported operation at the three-person capacity, was followed by initiation of shakedown testing.

Post-Refurbishment

Similar, though less extensive, checkout tests were also performed following refurbishment. No significant subsystem alterations were required as a result of these tests.

Shakedown Test

The objective of the shakedown test was to ensure integrated TSA/IARS operation prior to starting the Parametric/Endurance Test. The purpose of the testing was to correct misalignments, to establish and re-evaluate operating procedures and to familiarize personnel with IARS/TSA integrated operation. The procedures and results were similar both during pre- and post-refurbishment.

Shakedown testing was initiated after the completion of the checkout testing and, in the pre-refurbishment period, following reassembly of the modified IARS. The subsystem was operated continuously for a period of 24 hours. During this time, the EDCM and WVEM performance levels coincided with nominal three-person operation. The Parametric/Endurance Test followed immediately.

Parametric/Endurance Test

The objective of the IARS Parametric/Endurance Test was to characterize the subsystem performance during 90 days of operation. This subsystem characterization plan included 30 days of baseline operation, followed by: (1) variable CO_2 pressure (pCO_2) spans at different RH levels, (2) operation for a minimum of two days at less than a three-person capacity, (3) operation at baseline conditions to complete 90 days of testing and (4) demonstration of IARS operation for up to one hour at an inlet relative humidity between 26 and 35%. The baseline operating conditions for the three-person capacity IARS are presented in Table 19.

Carbon Dioxide Partial Pressure Test

The objective of this testing was to determine the effects of process air inlet pCO_2 levels of 133 to 1010 Pa (1 to 7.6 mm Hg) on EDCM performance while operating at three levels of inlet relative humidity (35%, 50% and 70% (±5%)).

Pre-Refurbishment. The pre-refurbishment tests were performed for variable pCO_2 at two humidity levels, 54 and 65% RH. Each pCO_2 level was maintained four to eight hours, depending on the severity of the change, to ensure steady- state performance during data collection. The results, as illustrated in Figure 25, indicate no significant EDCM performance difference between 54% and 65% inlet RH. The CO_2 removal efficiency at 400 Pa (3 mm Hg) was 82% (TI = 2.25) at both inlet RH conditions, corresponding to a CO_2 removal rate of 3 kg/d (6.6 lb/d). Therefore, the IARS operating at this baseline inlet pCO_2 level satisfies the CO_2 removal requirements of three people. The CO_2 removal efficiencies at the extremes of the inlet pCO_2 range were 54% at 133 Pa (1.0 mm Hg) and 86% at 850 Pa (6.4 mm Hg).

Post-Refurbishment. The pCO_2 span at the low inlet relative humidity of 35% to 40% was performed after refurbishment, because both modules of the IARS were previously unable to maintain stable operating performance at the lower end of the inlet relative humidity range. (See also Relative Humidity Tests.) The improved performance stability following refurbishment of the EDCM made possible a pCO_2 span at low inlet RH, as shown in Figure 25. The CO_2 removal efficiency at 400 Pa (3.0 mm Hg) was greater than 90%. The average cell voltage was 0.41 V. The improved absolute performance levels are attributed to the modifications incorporated during refurbishment (see Table 18).

Inlet Relative Humidity Tests

The objective of the RH tests was to determine the effects of process air inlet RH on IARS performance. This RH was controlled at various levels while observing EDCM and WVEM operation.

Pre-Refurbishment. The inlet RH operational tolerance of the IARS was significantly less than the range projected during the design. A decrease in operational tolerance was observed both in the WVEM and the EDCM. Initially, the WVEM could not maintain stoichiometric H_2 production rates at inlet RH's below 55% RH, yet operated normally well above the maximum, 70% RH upper

TABLE 19 BASELINE OPERATING CONDITIONS

Subsystem	
Total Air Flow, m^3/min (scfm)	13 (460)
Process Air Flow, m^3/min (scfm)	2 (70)
Inlet Relative Humidity, %	50 to 60
Inlet Air Temperature, K (F)	294 ±3 (70 ±5)
EDCM	
Current, A	9.3
Current Density, mA/cm^2 (ASF)	20.0 (18.6)
Inlet pCO_2 Level, Pa (mm Hg)	400 (3.0)
WVEM	
Current, A	22.3
Current Density, mA/cm^2 (ASF)	48.0 (44.6)

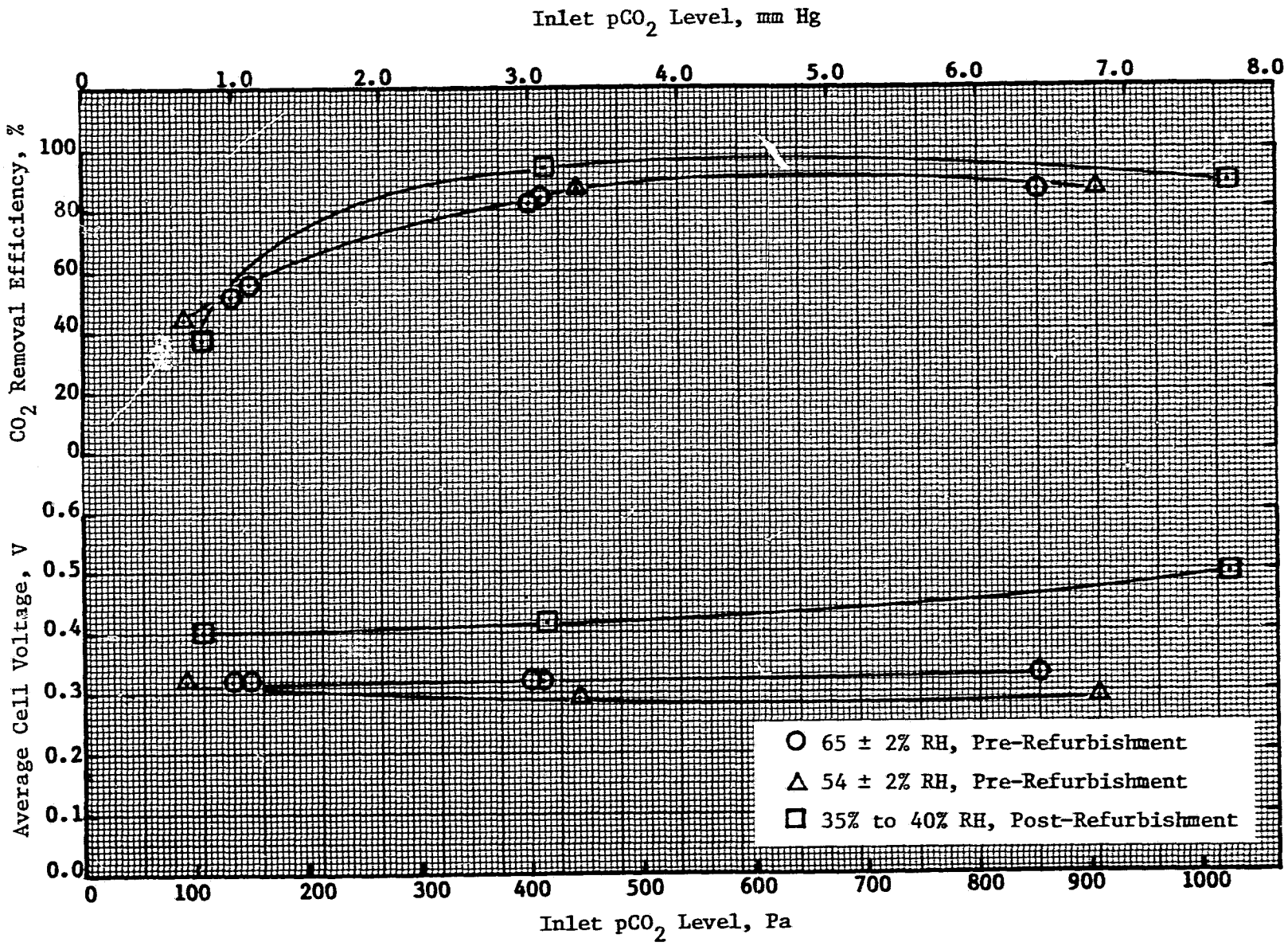

FIGURE 25 EFFECT OF PROCESS AIR pCO_2 ON EDCM PERFORMANCE

Life Systems, Inc.

limit. This type of performance indicates a low electrolyte charge concentration or the loss of electrolyte prior to subsystem assembly. After analysis, it was determined that the pressure checking procedure utilized for quality control of the modules prior to subsystem assembly was responsible. This procedure caused excessive electrolyte volume reduction in the electrode/matrix/electrode sandwich of the WVEM cells, which effectively shifted the inlet RH operating range of the WVEM upward. The pressure checking procedure was a modification of the baseline module vacuum charging technique, utilized for the 0.023 m^2 (0.25 ft^2) type electrochemical modules[6].

Similarly, the observed inlet operational tolerance range of the EDCM, 50 to 66%, was narrower than projected during the design, both with regard to upper and lower limits. The decrease in EDCM operational RH range was partly related to nickel corrosion within the porous plaque anodes of the electrochemical cells, as observed during module disassembly. The nickel corrosion material effectively reduced the electrolyte volume capacity of the anode. Therefore, the corrosion decreased the operating tolerance of the EDCM by limiting the volume into which electrolyte could expand with changes in inlet RH. It was projected that the corrosion formation occurred both during module storage following checkout, while the IARS was being upgraded from two-person to three-person capacity, and during subsystem shutdowns, due to reverse electrical discharge between the WVEM and the EDCM. Corrosion product formation during EDCM storage was potentially caused by ambient air causing a partial dryout with actual salt precipitation. Measures taken to avoid future anode corrosion included installation of inter-module isolation relays in the C/M I that are automatically activated to avoid reverse discharge during shutdown, improved module isolation valve designs that avoid dryout during shutdown and double bagging of modules that avoids dryout during long-term storage.

EDCM inlet RH operational tolerance was also limited by nonuniformity of individual cell charge concentrations. Two EDCM cells (E018 and E019) operated extremely wet during the high inlet RH testing, while the remaining 18 cells of the EDCM performed normally. Wet operation of a high humidity tolerance-type EDC cell, as used in the IARS, is indicated by an inability to maintain positive power producing capabilities due to insufficient H_2 feed to the flooded anode. The nonuniformity resulted from the individual cell charging techniques used which, as for the WVEM, were subsequently modified during refurbishment.

Post-Refurbishment. Post-Refurbishment performance curves for RH testing are plotted in Figure 26. Overall subsystem RH tolerances improved following refurbishment (Table 18). Initially the H_2/CO_2 exhaust flow rate of the EDCM declined with decreasing RH, such that at 42-45% RH the CO_2 concentration in the exhaust approached 50% instead of 44% baseline. When the EDCM was operated from an independent H_2 source, however, the exhaust flow rate remained constant as the RH was lowered between 35 and 40% RH; concurrent WVEM gas production slowly decreased due to H_2 back diffusion across the matrix. This indicated that the EDCM electrolyte charge concentration was correct but the WVEM electrolyte charge concentration was too low. The latter should be modified when the cells are recharged. One EDCM cell (E008) however indicated a "wetter"

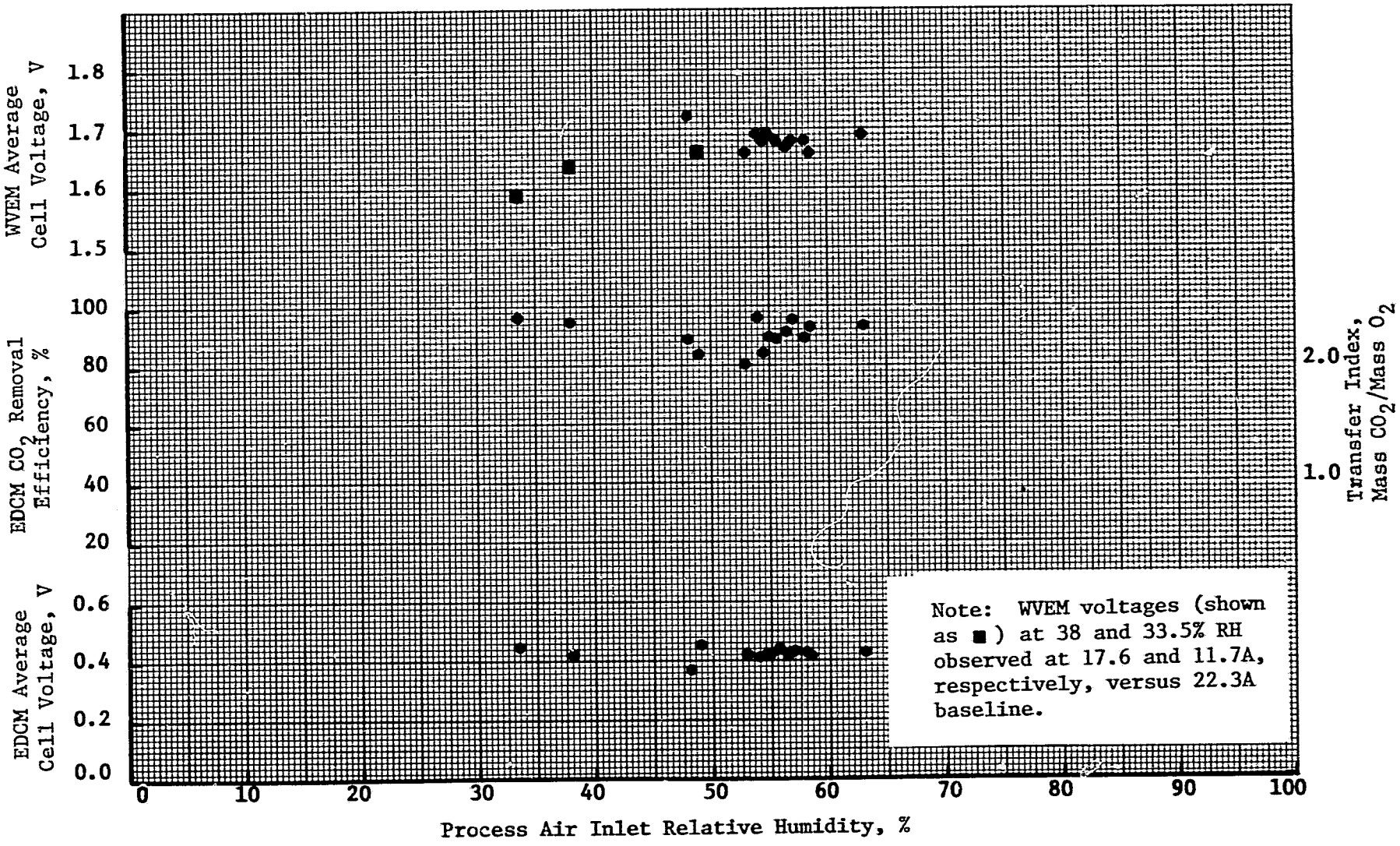

FIGURE 26 WVEM AND EDCM PERFORMANCES AT VARIOUS RH LEVELS (POST-REFURBISHMENT)

ORIGINAL PAGE
BLACK AND WHITE PHOTOGRAPH

average condition than the remaining cells and proved to be the limiting cell to RH range testing.

The RH tolerance range of the current IARS is inherently limited by the specified requirement for air-cooled modules, in which significant temperature gradients develop across the cell surfaces. These temperature gradients create larger RH gradients across the electrodes than would be projected from water removal/production rates. Therefore, the acceptable subsystem inlet RH operating range of an air-cooled cell is undersirably narrower than the in-cell RH operating range, which must include the temperature-related RH gradient. In contrast, liquid-cooled cells minimize in-cell temperature and RH gradients and consequently maximize the subsystem inlet RH tolerance range. Also, activities completed in a parallel technology program[21] have shown that RH tolerance (as well as pressure differential tolerance) can be increased using a liquid- cooled unitized core/composite cell construction. It is therefore recommended that the next generation IARS incorporate liquid-cooled electrochemical modules and unitized core/composite cell construction.

Low RH Test

The subsystem was run briefly at RH levels below 35% at the end of the post-refurbishment test period. The test was terminated after 22 minutes of subsystem operation due to potential WVEM cell crossover, even at the designed decreased WVEM current (see Table 12).

Baseline/Endurance Testing

During the baseline/endurance tests, the IARS performance was observed versus time. The ASU air was maintained at an approximately constant dew point. The air temperature was allowed to fluctuate with laboratory ambient temperature thereby permitting effects of variable RH to be observed.

The results of the baseline/endurance testing are presented in Figures 27 and 28. The combined pre- and post-refurbishment testing covered a total of 95 days (2,282 hours) of operation in the Normal Mode. A total of 14 shutdowns occurred during operation at the three-person capacity. Three were mechanical/electrochemical hardware related, five were C/M I hardware and software related, five were TSA related and one was operator related. A summary of these shutdowns is provided in Table 20.

Pre-Refurbishment. Nearly constant CO_2 removal efficiency and three-person capacity CO_2 removal rate were typically maintained. A slight decrease in EDCM power production was observed, as indicated by a 52 μV/h average decrease in cell voltage. A slight increase in the WVEM power required for three-person O_2 generation (approximately 3.6%) was observed over the first 1,242 hours of endurance testing. This was indicated by an increase in average cell voltage from 1.66 to 1.72 V/cell, a 48 μV/h-cell average rate of change. A summary of the performance data and its impact on power and heat generation for the three-person IARS is presented in Table 21. These calculations include only the power and heat generation associated with the WVEM and EDCM.

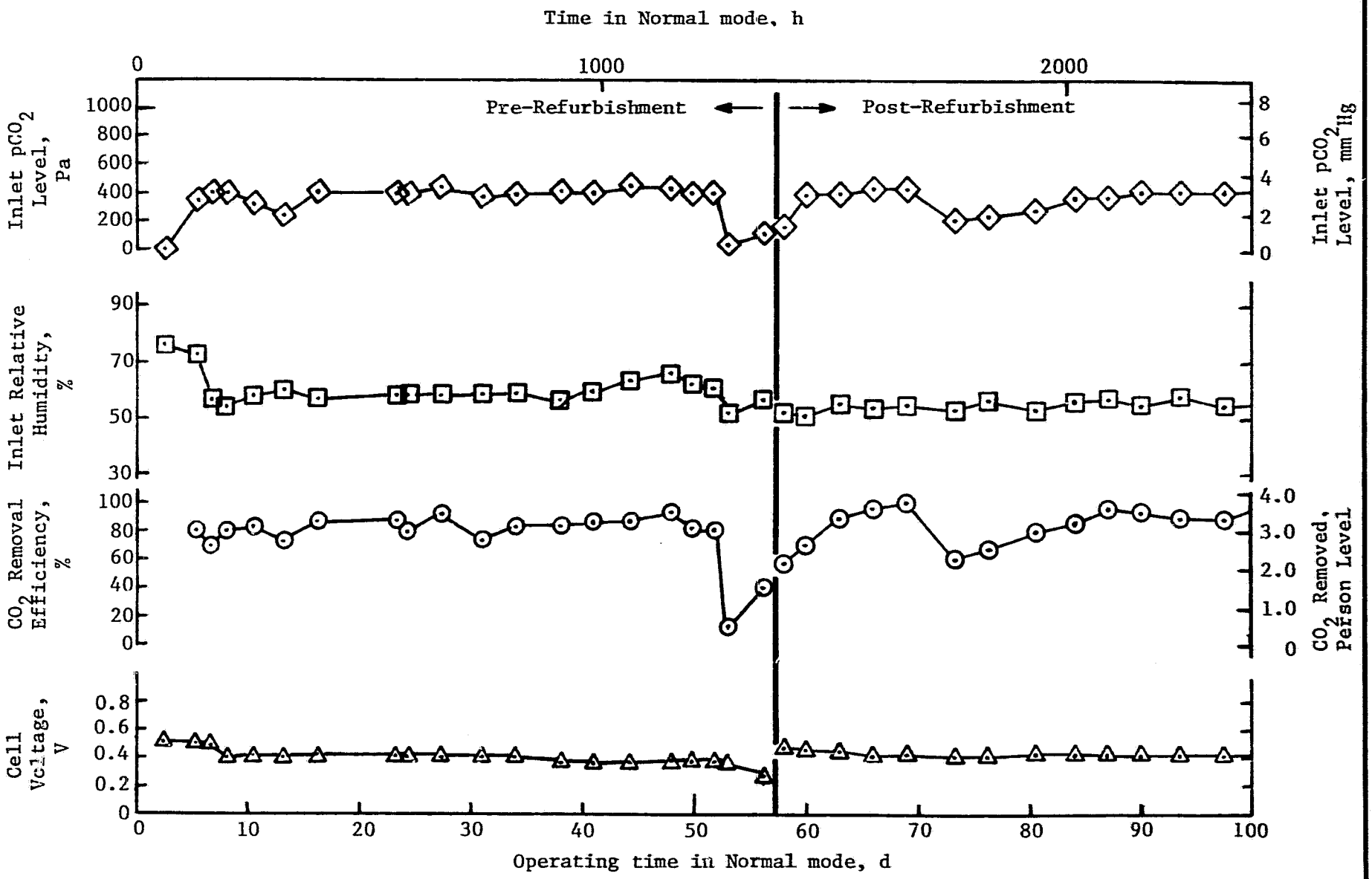

FIGURE 27 IARS EDCM PERFORMANCE

Life Systems, Inc.

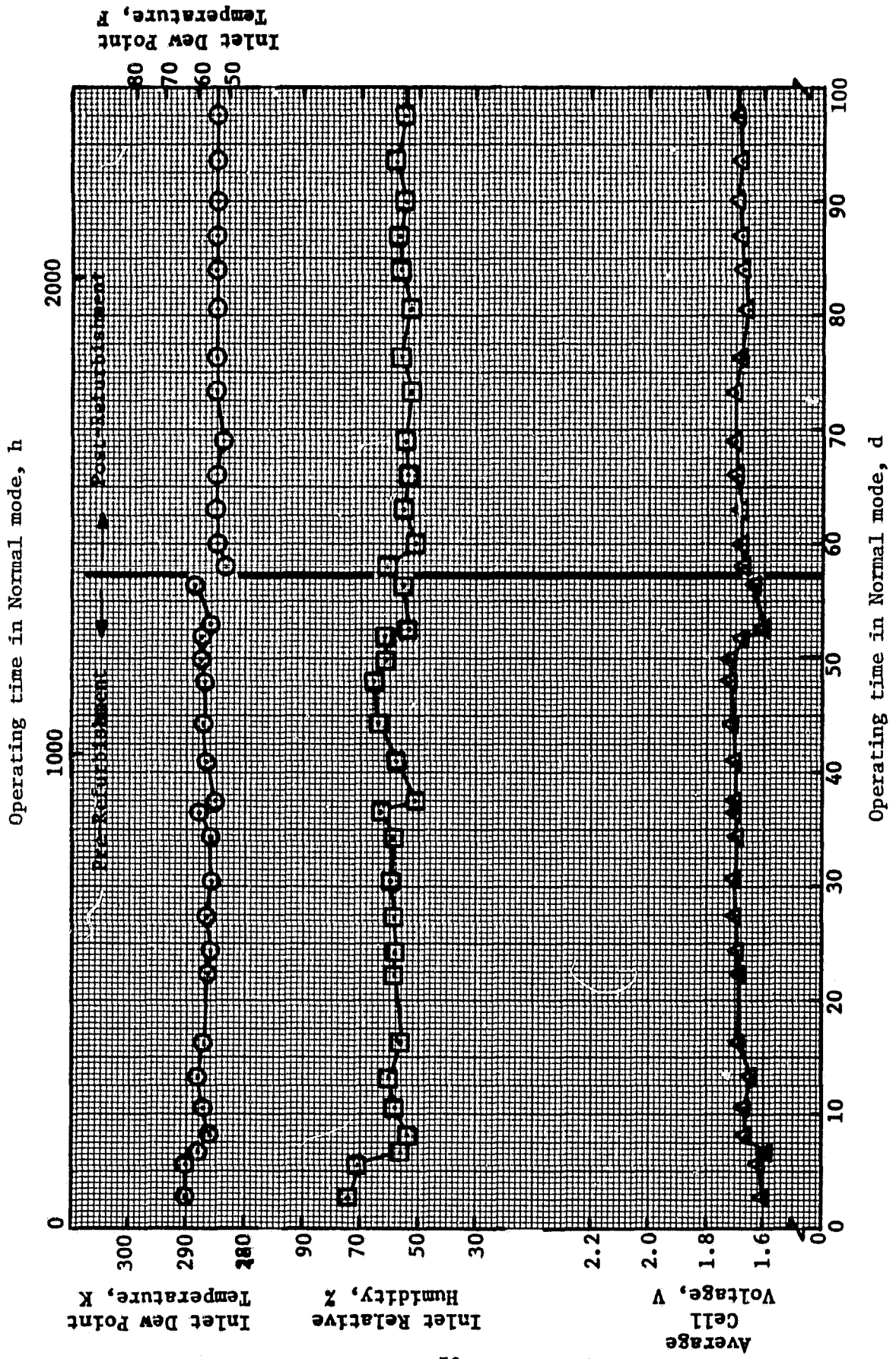

FIGURE 28 IARS WVEM PERFORMANCE

TABLE 20 IARS SHUTDOWN SUMMARY

Shutdown No.	Cause of Shutdown	Corrective Action
1	High current leakage to subsystem ground (manual shutdown using SSC)	Repaired damage to EDCM insulation plate; isolated lower portion of process air side module bolts (EDCM/WVEM) from high voltage current collectors at edges of both modules
2	Power interruption resulting in F001 low alarm	Restart IARS
3	A/D Failure (SSC Power Down)	Add automatic restart program to software
4	A/D Failure (SSC Power Down)	Upgraded restart program and restarted IARS
5	A/D Failure (SSC Power Down)	Restarted IARS (eliminated redundancy check for D001)
6	TSA requested shutdown - inlet RH out of range - drift in reading	Temporarily overrode TSA RH shutdown; then recalibrated
7	E019 in low voltage alarm - wet operation characteristics, implying nonuniform EDCM charge	Re-established baseline RH levels and restarted IARS (after 287 h of additional testing, E018 and E019 were electrically isolated without a subsystem shutdown)
8	A/D Failure (SSC Power Down)	Restarted IARS
9	A/D Failure (SSC Power Down)	Reprogrammed restart routine
10	Power failure followed by TSA failure (several heater coils in ASU were damaged)	Replaced heater coils and added protection for future power failures
11	High current leakage to subsystem ground (damaged WVEM insulation plate causing H_2 leakage)	Added additional electrically non-conductive coating of duct flange area
12	TSA requested shutdown - low inlet dew point - pump filter clogged	Added redundant pump in parallel
13	Loss of 400 Hz power to C/M I	Replaced generator brushes
14	SSC power down - dry bulb out of setpoint while performing low RH test - operator error	Restart

TABLE 21 IARS PERFORMANCE SUMMARY

	Three-Person[a] Post-Refurbishment	Three-Person[a] Pre-Refurbishment	Two-Person (Derated)
CO_2 Removal Efficiency, %	90.00	82.00	71.00
Average Cell Voltage, V			
WVEM	1.69	1.72	1.63
EDCM	0.41	0.38	0.45
DC Power Required, W			
WVEM	904.50	920.50	625.90
EDCM	-77.70	-70.70	-67.50
Total	826.80	849.80	558.40
Heat Generated, W			
WVEM	249.50	262.20	153.60
EDCM	155.50	158.10	117.00
Total	405.00	420.30	270.60
Equivalent Weight Savings Due to Power Sharing, kg (lb)[b]			
Due to Power Decrease[c]	24.00 (53.0)	21.90 (48.1)	20.90 (46.0)
Due to Heat Rejection Decrease[d]	17.80 (39.2)	16.20 (35.7)	15.50 (34.0)
Total	41.80 (92.2)	38.10 (83.8)	36.40 (80.0)

(a) After 1,240 hours of Pre-Refurbishment, and 1,040 hours of Post-Refurbishment operation.
(b) Calculated 86.6% power conversion efficiency for IARS C/M I, i.e., 70.7 W/0.866 = 81.6 W at three-person and 67.5 W/0.866 = 77.9 W at two-person.
(c) Based on a power penalty of 0.268 kg/W (0.59 lb/W).
(d) Based on a heat rejection penalty of 0.198 kg/W (0.437 lb/W). Without power sharing, EDC power would be rejected as heat.

Post-Refurbishment. The subsystem was tested for an additional 43 days (1,040 h) of operation in the Normal Mode. Refurbishment (Table 18) improved the CO_2 removal efficiencies slightly at baseline pCO_2 levels, as shown in the second half of Figure 27. (Removal efficiencies of course declined at lower pCO_2 levels, in accordance with Figure 25.) Average initial EDCM cell voltages increased by 8% (to 0.4 V) and dropped at an average rate of only 24 μV/h-cell, a 54% improvement. WVEM cell voltages were similar to, but more consistent than, those observed in the pre-refurbishment endurance test. Performance data and its impact on power and heat generation is summarized in Table 21.

The total operational power and the heat generation rate of the IARS were 13% and 26% lower per person, respectively, than those observed with the one-person EARS.[18] These improvements are a direct result of the advanced WVEM anode.

The DC power conversion efficiency of the C/M I's power sharing controller was calculated to be 86.6%, based on measurements made during the endurance test. This efficiency was based on measurements of the total DC input power through the C/M I and of the net power delivered to the electrochemical modules. Total AC power consumption during testing was 2.2 kW. The majority of this AC power, between 1.5 and 1.6 kW (120 V, 3Ø), was consumed by the high power blower, which was required to provide sufficient air flow for three-person IARS operation. The remaining AC power, approximately 650 W, was used by the C/M I hardware.

Derated Test

Full capacity of the IARS will not be needed in some applications/situations. The objective of the derated test, performed during pre-refurbishment, was to operate the IARS at a decreased (at one person) capacity and demonstrate resulting power savings. However, based on these experiences with the three-person preprototype electrochemical CO_2 concentrating subsystem (CS-3)[12] operating at a one-person capacity was not desirable and a two-person capacity derated test was selected for the IARS.

The results of derating operation by one person from the usual three-person level (i.e., two-person operation) are illustrated in Figures 27 and 28 (the initial 185 h (7.7 d) of testing). The conceptual approach selected for derated operation included operation of all 20 EDCM cells at a decreased current density. The selected method, which avoids cell dryout by ensuring that all cells produce water,[a] was also based on the results of the CS-3. To provide two-person capacity IARS operation the EDCM was operated at 7.5 A, or 16.1 mA/cm^2 (15 ASF), and the WVEM was operated at 16 A, or 34.4 mA/cm^2 (32 ASF). The average EDCM CO_2 removal efficiency was 71% during two-person operation, resulting in an average 2.1 kg/d (4.6 lb/d) CO_2 removal rate. The resulting DC power reduction of 68% is apparent from the two- and three-person power levels reported in Table 21.

(a) This is not the case in the "optimum current density approach," in which the number of cells is reduced and the current density is kept constant at the optimum baseline level with respect to CO_2 removal.

Acceptance Test

The objective of the Acceptance Test was to verify operation of the IARS following the parametric/endurance test program. The Acceptance Test was conducted over a two-day period and included (1) a subsystem shutdown after off design operation, (2) a subsystem startup and operation at baseline condition and (3) an excursion for up to one hour to low levels of inlet process air relative humidity (goal of 26-35% RH). Also, during the Acceptance Test the total subsystem power reduction due to power sharing was demonstrated. The Acceptance Test was witnessed by the NASA Technical Monitor. Prior to initiation of the Acceptance Test the IARS had not been operated for a period of seven months following the completion of the parametric/endurance testing.

The acceptance test was successfully completed. The subsystem was subjected to an operator initiated automatic startup and automatic shutdown. Also, a shutdown induced by an off-design condition (low cell voltage No. 8 of the EDCM) was demonstrated.

The performance of the IARS during the baseline portion of the Acceptance Test was as expected. At the baseline operating conditions (See Table 19) an average EDCM cell voltage of 0.46V at the design current density of 20.0 mA/cm^2 (18.6 ASF) was observed. At a process air inlet pCO_2 of 400 Pa (3.0 mm Hg) the CO_2 removal efficiency was 82%. The WVE operated at its design current density of 48.0 mA/cm^2 (44.6 ASF) and exhibited an average cell voltage of 1.68V. The nominal value of the inlet relative humidity of the process air was 58% RH.

Excursions to low inlet relative humidity were limited to 40 to 42% RH by the performance of cell No. 8 in the EDCM.

Power sharing benefits were demonstrated by manually turning the EDCM current to zero and observing the change in current supplied from the external power supplies to the WVEM. A decrease of 8 to 10% in WVEM power from the external source was observed.

MATH MODEL DEVELOPMENT

A steady-state computer simulation model was developed[22] to describe the performance of the IARS. The computer simulation model combines mathematical expressions describing the performance of the EDC and WVEM with expressions that characterize the major mechanical components of the subsystem. Expressions for overall mass and energy balances are also included. The model is capable of predicting performance over a wide operating range and the computer simulation results agree with experimental data over the prediction range.[22]

Program Description

The program consists of a MAIN program and five subprograms (TEST, PHTO, DEWT, TICOR and ENGBAL). The MAIN program is further subdivided into six sections, each section performing calculations of a specified task (and activities related to that task). These tasks and activities are described in Table 22.

TABLE 22 IARS MATH MODEL PROGRAM DESCRIPTIONS

Program	Subprogram	Section	Title/Description
MAIN	N/A	0	Preliminaries
			Declare Variables Establish Constants Read and Print Input Variables Print Nomenclature and Headings
		1	Range Test and Conversions
			Check Input Variables to Determine if Within Range Perform Unit Conversions Check Current Ratios
		2	Component Analysis
			Flow Rates in Different Streams Filter ΔP WVEM Analysis o Energy Balance o Calculation of ΔP o Species Balance o Water Vapor Balance EDCM Analysis o Energy Balance o Species Balance o Water Vapor Balance Blower Power
		3	Stream Parameter Calculations
			Analysis of Mixing Processes at the Outlet End of Modules Flow Rates of Species
		4	Output Parameter Calculations
			Module Performance Indices and Parameters Subsystem Conditions of All Outlet Streams Equivalent Weights
		5	Print Out Results
			Format for Output of Results Print Results

continued-

Table 22 - continued

Program	Subprogram	Section	Title/Description
		6	Messages/Alarms Unfulfilled Branch Conditions Early Terminations Flags Program Options
N/A	TEST	N/A	Checks if the value of a variable is within the given range
N/A	PHTO	N/A	Calculates the saturation pressure of water corresponding to a given temperature
N/A	DEWT	N/A	Calculates the saturation temperature (F) of water for given pressure (mm Hg); uses Newton's iteration method
N/A	TICOR	N/A	Calculates the TI of the EDCM given values of pCO_2, cathode air flow rate per cell and current density
N/A	ENGBAL	N/A	Solves for the process and cooling air exit temperatures and energy pick up of different streams as they flow through the WVEM or EDCM

The function performed by the different subprograms are also depicted. Figure 29 shows how each of the subprograms are related to the MAIN program and its various sections.

Model Results

The utility of a computer model depends on how well it predicts actual operation of the hardware that it simulates. For the IARS computer program many different comparisons can be chosen. Table 23 illustrates one such comparison. The experimental data corresponds to IARS hardware operation at a selected nominal condition. Steady-state was achieved after a sufficiently long waiting period (several hours). Output conditions and subsystem performance were then measured. The computer model program was run with the same operating conditions supplied as input parameters. The outputs, as predicted by the model, were then compared with the measured ones as shown in Table 23. The correlations are relatively close. Comparisons with other test data points have shown similar trends.

CONCLUSIONS

The following conclusions were reached based on the IARS development program.

1. The IARS concept with power sharing is a viable solution to provide O_2 generation, CO_2 removal and partial humidity control aboard a manned spacecraft in an equivalent weight effective manner.

2. The IARS hardware has reached a preprototype level of maturity by demonstrating successful integration of two independent electrochemical modules, the ancillary component, sensors and actuators, and the control and monitoring instrumentation required to achieve a total of 145 days of subsystem operation (87 days in Normal Mode).

3. The C/M I is capable of performing the control and monitoring functions required to operate a complex electrochemical subsystem with one button automatic startup, auto protection and control sequencing.

4. The power sharing concept is applicable to the three-person subsystem level hardware and demonstrates the potential of a 38.1 kg (83.8 lb) equivalent weight savings.

5. The advanced WVE anode used in the WVEM of the IARS provides significant reduction in subsystem total power and heat rejection requirements. The three-person IARS demonstrated a 13% reduction in power requirements and a 26% reduction in heat rejection requirements when compared to the one-person EARS.

RECOMMENDATIONS

The following recommendations are direct results of the program activities.

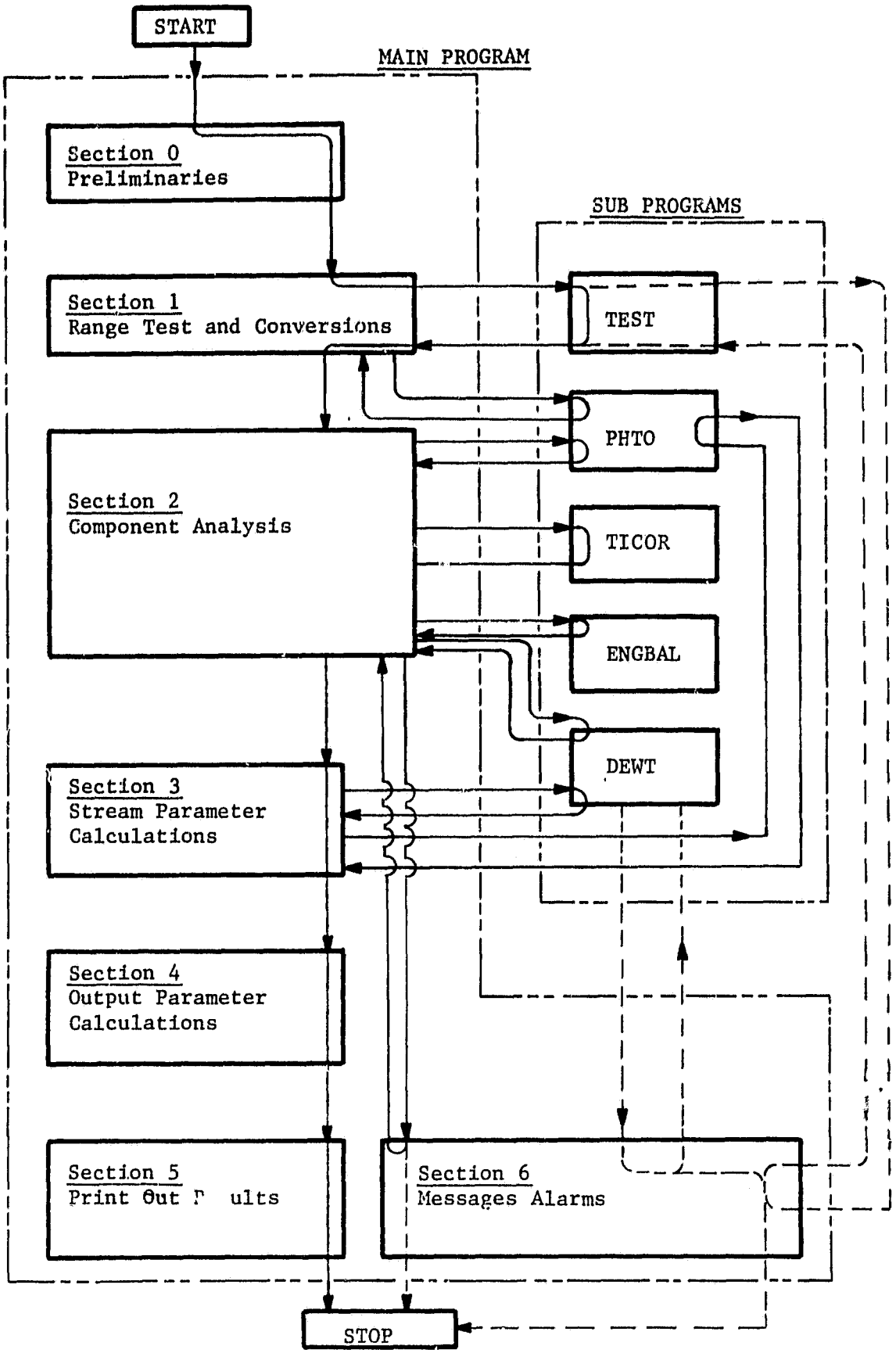

FIGURE 29 COMPUTER MODEL STRUCTURE

TABLE 23 MATH MODEL PREDICTION RESULTS

Operating/Input Condition:

Parameter	Value
Air Inlet Pressure, psia	14.1
Air Inlet Temperature, F	69
Air Inlet pCO_2, mm Hg	3.00
Air Inlet pO_2, psia	2.97
Air Inlet Dew Point, F	61
Total Air Flow Rate, scfm	341
H_2/CO_2 Outlet Pressure, psia	14.6
Number of WVEM cells	19
WVEM Current, A	18.1
Number of EDCM cells	19
EDCM Current, A	7.5

Measured or Predicted Outputs:

Parameter	Model Prediction Value	Measured Value[a]
EDCM Cell Voltage, V	0.595	0.520
EDCM Process Air Outlet Temp., F	71.4	72.0
EDCM Process Air Outlet Dew Point, F	62.0	63.0
EDCM Process Air Outlet RH, %	72.4	73.0
Transfer Index, TI	2.09	2.05
WVEM Cell Voltage, V	1.67	1.61
WVEM Process Air Outlet Temp., F	72.0	72.3
WVEM Process Air Outlet Dew Point, F	55.1	58.5
WVEM Process Air Outlet RH, %	55.4	61.0

(a) Pre-Refurbishment

1. The IARS hardware development should be continued to the prototype level as the next logical development step toward an IARS flight experiment demonstration. The development of the C/M I hardware to the prototype level should be continued with the fabrication of prototype hardware, which will illustrate mass and volume savings. The C/M I software approach should be maintained with the incorporation of short and long-term trend analysis program.

2. A liquid cooling approach of the IARS module should be adopted to (1) minimize power requirements and noise production levels associated with the high capacity fans of the air cooled subsystem and (2) improve module operating performance and relative humidity tolerance.

3. The basic IARS-type cell hardware, utilizing the 0.046 m^2 (0.50 ft^2) electrode area, should be maintained. This should be modified, however, to provide for module vacuum charging capabilities, positive ambient air isolation during storage (for long-term shelf-life) and elimination of the potential for module current leakage. Additionally, use of an edge-molded electrode/gas spacer/matrix composite (unitized core/composite cell) is recommended.

REFERENCES

1. Conner, W. J.; Greenough, B. M. and Cook, G. M., "Design & Development of a Water Vapor Electrolysis Unit," NASA CR-607, Lockheed Missiles and Space Company, Sunnyvale, CA; September, 1966.

2. Celino, V. A. and Wydeven, T., "Development Status of the Water Vapor Electrolysis System," Paper No. 71-AV-24, ASME Conference, San Francisco, CA; July, 1971.

3. Wynveen, R. A. and Quattrone, P. D., "Electrochemical Carbon Dioxide Concentrating System," Paper No. 71-AV-21, SAE/ASME/AIAA Conference, San Francisco, CA; July, 1971.

4. Wynveen, R. A.; Schubert, F. H. and Powell, J. D., "One-Man, Self-Contained CO_2 Concentrator System," Final Report, Contract NAS2-6118, NASA CR-114426, Life Systems, Inc., Cleveland, OH; March, 1972.

5. Marshall, R. D.; Schubert, F. H. and Carlson, J. N., "Electrochemical Carbon Dioxide Concentrator: Math Model," Final Report, Contract NAS2-6478, NASA CR-114639, Life Systems, Inc., Cleveland, OH; August, 1973.

6. Powell, J. D.; Schubert, F. H.; Marshall, R. D. and Shumar, J. W., "Six-Man, Self-Contained Carbon Dioxide Concentrator Subsystem," Final Report, Contract NAS2-6478, NASA CR-114743, Life Systems, Inc., Cleveland, OH; June, 1974.

7. Kostell, G. D.; Schubert, F. H.; Shumar, J. W.; Hallick, T. M. and Jensen, F. C., "Six-Man, Self-Contained Carbon Dioxide Concentrator

Subsystem for Space Station Prototype (SSP) Application," Final Report, Contract NAS2-6478, NASA CR-114742, Life Systems, Inc., Cleveland, OH; May, 1974.

8. Marshall, R. D.; Carlson, J. N. and Schubert, F. H., "Electrochemical Carbon Dioxide Concentrator Subsystem Math Model," Contract NAS2-6478, NASA CR-137564, Life Systems, Inc., Cleveland, OH; September, 1974.

9. Schubert, F. H. and Quattrone, P. D., "Development of a Six-Man, Self-Contained Carbon Dioxide Collection Subsystem for Spacecraft Application," Paper NO. 74-ENAs-16, Intersociety Conference on Environmental Systems, Seattle, WA; July, 1974.

10. Samonski, F. H. and Neel, J. M., "Atmosphere Revitalization for Manned Spacecraft - An Assessment of Technology Readiness," 24th IAF Congress, Baku USSR; October, 1973.

11. Winnick, J.; Marshall, R. D. and Schubert, F. H., "An Electrochemical Device for Carbon Dioxide Concentration, I. System Design and Performance," I&EC Process Design and Development, Volume 13, pp. 59-63; January, 1974.

12. Schubert, F. H.; Heppner, D. B.; Hallick, T. M. and Woods, R. R., "Technology Advancement of the Electrochemical CO_2 Concentrating Process," Final Report, Contract NAS2-8666, NASA CR-152250, Life Systems, Inc., Cleveland, OH; May, 1979.

13. Schneider, J. J.; Schubert, F. H.; Hallick, T. M. and Woods, R. R., "Electrochamical Carbon Dioxide Concentrator Advanced Technology Tasks," Final Report, Contract NAS2-6478, NASA CR 137732, Life Systems, Inc., Cleveland, OH; October, 1975.

14. Schubert, F. H. and Marshall, R. D., "Integrated Water Vapor Electrolysis and Electrochemical Depolarized Concentrator," Annual Status Report, ER-192, Life Systems, Inc., Cleveland, OH; April, 1973.

15. Huddleston, J. C. and Aylward, Dr. J. R., "Development of an Integrated Water Vapor Electrolysis Oxygen Generator and Hydrogen Depolarized Carbon Dioxide Concentrator," Contract NAS9-11830, NASA CR-115575, Hamilton Standard, Windsor Locks, CT; May, 1972.

16. Huddleston, J. C. and Alyward, Dr. J. R., "One Man Electrochemical Air Revitalization System," Final Report, Contract NAS9-13679, Hamilton Standard, Windsor Locks, CT; May, 1975.

17. Woods, R. R.; Schubert, F. H. and Hallick, T. M., "Electrochemical Air Revitalization System Optimization Investigation," Final Report, Contract NAS9-14301, ER-247-3, Life Systems, Inc., Cleveland, OH; October, 1975.

18. Schubert, F. H.; Marshall, R. D.; Hallick, T. M. and Woods, R. R., "One-Man, Electrochemical Air Revitalization System Evaluation," Final Report, Contract NAS9-14658, ER-284-4, Life Systems, Inc., Cleveland, OH; July, 1976.

19. NASA, Manned Spacecraft Center, "Procedures and Requirements for the Flammability and Offgassing Evaluation of Manned Spacecraft Nonmetallic Materials," DNA-0002; July, 1968.

20. "Design Criteria Handbook," SSP Document No. 9, Revision A, Hamilton Standard, Windsor Locks, CT; November, 1970.

21. Lance, N., Jr. and Schubert, F. H., "Regenerable CO_2 Collection for Spacecraft Application," Paper No. 81-ENAs-28, Intersociety Conference on Environmental Systems, San Francisco, CA; July, 1981.

22. Sharma, M. P.; Heppner, D. B. and Schubert, F. H., "Preprototype Independent Air Revitalization Subsystem," Computer Math Model User's Manual, Contract NAS9-15218, ER-319-19, Life Systems, Inc., Cleveland, OH; October, 1978.

APPENDIX 1

DUCT, CURRENT TAB AND END PLATE IMPROVEMENTS

Ducts

Pre-Refurbishment

The IARS air/fan ducting design was first re-evaluated to identify regions of high pressure drops. Secondly, mock-ups of the proposed duct designs were prepared to evaluate pressure drops and maldistribution of subsystem air flows. After completion of the duct analysis, a new IARS subsystem blower was selected.

The following ducting modifications were designed and incorporated: (1) a curved outlet cooling air duct (over the top of the IARS), (2) a tapered inlet cooling air duct that includes a turning vane to minimize cooling air flow maldistribution between the two modules and (3) a modification to the upper portion of the process air outlet duct that combines the cooling and process air at the inlet of the blower.

Four interface modifications were also incorporated. The inside diameter of the cooling air flange was increased to 4 in and the inside diameter of the outlet subsystem flange was increased to 6 in. The outlet air interface of the subsystem was relocated at the top of the unit. Finally, the inlet cooling air interface was slightly repositioned with respect to the inlet process air interface. This final modification resulted from increasing the depth of the cooling air ducting.

Testing of these ducting modifications demonstrated a total subsystem air flow rate of 14 m^3/min (500 scfm) with 2.1 m^3/min (75 scfm) process air flow at a subsystem pressure drop of 1.5 kPa (5.9 in water). The initial design goal for the IARS was a total air flow rate of 13 m^3/min (460 scfm) with 2.0 m^3/min (70 scfm) process air flow rate at a pressure drop of 0.4 kPa (1.6 in water). The pressure drop goal of 0.4 kPa (1.6 in water) could not be met within the subsystem envelope constraint.

Post-Refurbishment

The duct changes implemented in the Pre-Refurbishment period were permanently effective. Therefore, no further improvements were required or recommended.

Current Tabs

Pre-Refurbishment

Initially the most cost effective approach was selected to reduce the voltage loss associated with current feed to the WVEM. This consisted of minimizing contact resistance associated with the titanium (Ti) tabs, caused by non-conductive surface oxide formations. This resistance was minimized by providing silver (Ag) tabs that were metallurgically welded to the Ti tabs of the cell

frames and current collectors. The Ag tabs provided good contact with the current feed wires. As a result, the voltage drop at the WVEM baseline current of 22.3 A to was reduced to approximately 25 mV per cell versus 100 to 200 mV measured previously.

Post-Refurbishment

The WVEM current carrying capability was further improved by removing the Ti tabs and incorporating tantalum (Ta) tabs. The tabs were relocated off center from the cell frame tabs and injection molded into the cell frames. This provided adequate space to mechanically bolt solid Ag inter-cell current connectors between cells.

End Plates

Pre-Refurbishment

The delamination of the end plates resulted from improper bonding-surface etching techniques used by the vendor during assembly of the Carpenter 20 stainless steel parts. The delamination was limited to lost adhesion between the corner inserts and the main honeycomb assembly. All of the side inserts maintained structural integrity with the main honeycomb assembly. Based on this limited degree of delamination the most cost effective approach to repairing the end plates was selected. The honeycomb end plates were partially disassembled, as required, roughened mechanically as well as possible at the (still epoxy coated) bonding surfaces and reassembled with epoxy cement. Additionally, module assembly procedures were modified to minimize stress on the end plate corner inserts during assembly by using a press rather than the bolts to compress the module to its final height.

Post-Refurbishment

The stainless steel honeycomb end plates were replaced with 30% glass-filled polysulfone units. Because of the commonality of material, the end plate design incorporated the insulation plate function. A reduction of 50% in components was therefore achieved without any loss in structural stiffness and with minimal weight increase. The polysulfone end plates weighed 20 kg (44 lb). The previous end plates and insulation plates weighed 19 kg (41 lb).