# NASA TECHNICAL MEMORANDUM

NASA TM-82485

(NASA-TM-82485) SPACE TELESCOPE NEUTRAL BUOYANCY SIMULATIONS: THE FIRST TWO YEARS (NASA) 126 p HC A07/MF A01 CSCI 05H

N82-30942

Unclas

G3/54 28717

# SPACE TELESCOPE NEUTRAL BUOYANCY SIMULATIONS - THE FIRST TWO YEARS

By Fred G. Sanders
Systems Analysis and Integration Laboratory

June 1982

AUG 1982
RECEIVED
NASA STI FACILITY
ACCESS DEPT.

**NASA**

*George C. Marshall Space Flight Center*
*Marshall Space Flight Center, Alabama*

MSFC - Form 3190 (Rev June 1971)

TECHNICAL REPORT STANDARD TITLE PAGE

| | | |
|---|---|---|
| 1. REPORT NO. NASA TM - 82485 | 2. GOVERNMENT ACCESSION NO. | 3. RECIPIENT'S CATALOG NO. |
| 4. TITLE AND SUBTITLE Space Telescope Neutral Buoyancy Simulations – The First Two Years | | 5. REPORT DATE June 1982 |
| | | 6. PERFORMING ORGANIZATION CODE |
| 7. AUTHOR(S) Fred G. Sanders | | 8. PERFORMING ORGANIZATION REPORT # |
| 9. PERFORMING ORGANIZATION NAME AND ADDRESS George C. Marshall Space Flight Center Marshall Space Flight Center, Alabama 35812 | | 10. WORK UNIT NO. |
| | | 11. CONTRACT OR GRANT NO. |
| 12. SPONSORING AGENCY NAME AND ADDRESS National Aeronautics and Space Administration Washington, D.C. 20546 | | 13. TYPE OF REPORT & PERIOD COVERED Technical Memorandum |
| | | 14. SPONSORING AGENCY CODE |

15. SUPPLEMENTARY NOTES

Prepared by Systems Analysis and Integration Laboratory, Science and Engineering.

16. ABSTRACT

This brief illustrated report of neutral buoyancy simulations conducted to validate the crew systems interface as it relates to space telescope on-orbit maintenance and contingency operations begins with the initial concept validation tests using low-fidelity mockups in August 1979, and progresses through the entire spectrum of proposed space telescope refurbishment and selected contingencies using upgraded mockups which reflect flight hardware as of August 1981. It contains findings which may be applicable to future efforts of a similar nature.

| | |
|---|---|
| 17. KEY WORDS Nautral Buoyancy Simulations Space Telescope | 18. DISTRIBUTION STATEMENT Unclassified – Unlimited |

| | | | |
|---|---|---|---|
| 19. SECURITY CLASSIF. (of this report) Unclassified | 20. SECURITY CLASSIF. (of this page) Unclassified | 21. NO. OF PAGES 125 | 22. PRICE NTIS |

MSFC - Form 3292 (Rev December 1972)

For sale by National Technical Information Service, Springfield, Virginia 22151

## FOREWORD

Space Telescope is an unmanned multi-purpose optical telescope observatory designed to orbit the Earth at an altitude of 310 miles and provide astronomers with a clear view of the universe. The telescope's large 2.4-m aperture will permit the observation of stars and galaxies 1/50th as bright as can now be observed by the largest ground-based telescopes.

A variety of orbital-replaceable instruments are an integral part of the Space Telescope and provide functions which will give new insights into the nature of the universe. The Wide Field Camera will be used for cosmological exploration on three major fronts: (1) the calibration of the distance scale, (2) the measurement of evolutionary changes, and (3) the testing of models of the universe as a whole. The Faint Object Camera will use the full resolution performance of the Space Telescope to photograph celestial objects so faint that cumulative exposures over many orbits will be required to produce an image. The Faint Object Spectrograph will measure the wavelengths of energy coming from faint sources to determine their constitution, physical characteristics, and dynamics. The High Resolution Spectrograph will obtain very high resolution spectrographic analysis in the visible and ultraviolet regions of the spectrum. It will enable scientists to determine the composition of the interstellar medium and the abundance of elements and develop stellar evolutionary models. The High Speed Photometer will obtain precise measurements of constant or time variable intensities over a broad wavelength interval from either point sources or celestial fields of small angular size. Astrometry – or the measurement of the positions and motions of stars – will be performed by the Fine Guidance Sensors of the Optical Telescope Assembly.

The Space Telescope presents the most demanding orbital maintenance task yet envisioned and has necessitated an intensive man/system simulation program to develop and verify design approaches. This report is dedicated to that effort.

PRECEDING PAGE BLANK NOT FILMED

TABLE OF CONTENTS


| | Page |
|---|---|
| 1.0 INTRODUCTION | 1 |
| 1.1 Purpose | 1 |
| 1.2 Scope | 1 |
| 1.3 Significant Results | 1 |
| 1.4 Summary | 2 |
| 1.5 Background | 2 |
| 2.0 DISCUSSION | 3 |
| 2.1 Testing Facility | 3 |
| 2.2 Mockups and Support Equipment | 4 |
| 2.3 Subsystem Development | 5 |
| 2.3.1 Axial Scientific Instrument (SI) | 5 |
| 2.3.2 Radial SI | 6 |
| 2.3.3 FGS | 7 |
| 2.3.4 FHST/RSU | 7 |
| 2.3.5 SSM Equipment Section (ES) | 8 |
| 2.3.6 Optical Telescope Assembly (OTA) ES | 9 |
| 2.3.7 Solar Array (SA) | 9 |
| 2.3.8 Tools | 12 |
| 2.3.9 High Gain Antenna (HGA) | 13 |
| 2.3.10 Aperture Door (AD) | 13 |
| 2.4 Portable Foot Restraint (PFR) | 13 |
| 2.4.1 Foot Restraint Sockets | 14 |
| 2.5 Handrails | 14 |
| 2.6 Latch Design | 15 |
| 2.7 Fasteners | 16 |
| 2.8 RMS Related Activities | 17 |
| 3.0 CONCLUSION | 18 |


PRECEDING PAGE BLANK NOT FILMED

## LIST OF ILLUSTRATIONS


| Figure | Title | Page |
|---|---|---|
| 1. | Neutral Buoyancy Simulator complex | 19 |
| 2. | Test subject wearing A7LB spacesuit | 20 |
| 3. | ST aft shroud mockup, August 1979 | 21 |
| 4. | ST mockup, November 1979 | 22 |
| 5. | Low and high fidelity axial SI mockups | 23 |
| 6. | Ground strap rotation problem due to torque | 25 |
| 7. | Anti-rotation device as proposed by Astronaut Bruce McCandless | 26 |
| 8. | Axial SI electrical wing nut connector mockup | 28 |
| 9. | Axial SI rails showing movement | 29 |
| 10. | Beryllium copper spring in appearance and function | 30 |
| 11. | Axial SI point A registration fitting | 31 |
| 12. | Wide field planetary camera (radial SI) mockup changeout | 32 |
| 13. | Radial SI workstations | 33 |
| 14. | Radial SI portable handhold plate | 35 |
| 15. | Mirror cover installation using high fidelity mockups | 36 |
| 16. | FGS orientation in AS | 38 |
| 17. | Fine guidance sensor changeout | 39 |
| 18. | Crewman operating FGS fastener | 42 |
| 19. | One concept of the FGS ganged electrical connector | 43 |
| 20. | FHST mockup | 44 |
| 21. | Crewman operating lightshield J-hooks | 46 |
| 22. | J-hook latch | 48 |
| 23. | RSU mounting bolt locations | 49 |
| 24. | RSU electrical wing tab connectors | 49 |
| 25. | Rate sensor unit removal/replacement concepts | 50 |

LIST OF ILLUSTRATIONS (Continued)


| Figure | Title | Page |
|---|---|---|
| 26. | Rejection of initial RSU location concept | 51 |
| 27. | SSM-ES location | 55 |
| 28. | Bay 10 SI C&DH and RGE placement | 56 |
| 29. | Typical ORU (e.g., SI C&DH) door mounting system | 59 |
| 30. | Bay 2 and 3 doors and battery placement | 60 |
| 31. | Low fidelity battery mockups | 61 |
| 32. | OTA-ES bay accessibility | 62 |
| 33. | FGE accessibility test | 63 |
| 34. | Early solar array jettison simulations (November 1979) | 66 |
| 35. | Early solar array diode box simulations (November 1979) | 70 |
| 36. | High fidelity solar array mockup and associated hardware | 72 |
| 37. | Early forward latch test (November 1979) | 73 |
| 38. | Forward and aft latch and jettison clamp locations on light shield during RMS jettison simulation | 75 |
| 39. | Solar array contingency tasks | 76 |
| 40. | Solar array mockup | 77 |
| 41. | Wrench extension diagram | 78 |
| 42. | Jettison clamp index marks | 81 |
| 43. | Portable grapple fixture installation visibility problem | 82 |
| 44. | Solar array grapple fixture installation socket | 83 |
| 45. | Direction and number-of-turns placard | 84 |
| 46. | ST baseline ratchet wrench | 85 |
| 47. | Early socket extension and wrenches | 86 |
| 48. | Induced leg fatigue | 87 |
| 49. | HGA access problem | 88 |
| 50. | HGA foot restraint location test | 90 |

LIST OF ILLUSTRATIONS (Concluded)


| Figure | Title | Page |
|---|---|---|
| 51. | Early FR designs | 91 |
| 52. | Portable foot restraint | 95 |
| 53. | ST female 12 point hex socket interface | 96 |
| 54. | Foot restraint articulation | 97 |
| 55. | Working envelope using PFR | 98 |
| 56. | ST female hex foot restraint socket | 99 |
| 57. | One FR socket location used to provide access to four separate maintenance locations (SSM-ES bay 2, batteries) | 101 |
| 58. | ST FR sockets and handrail locations | 105 |
| 59. | Aft shroud door handrail placements | 106 |
| 60. | "Door knob" handhold | 107 |
| 61. | Adjustable grip latch | 108 |
| 62. | Bay door latch fastener locations | 108 |
| 63. | Aft shroud door latch locations | 109 |
| 64. | Aft shroud door latch with over center lock | 110 |
| 65. | ORU bolt | 111 |
| 66. | RMS mockup as used for SA jettison test | 112 |
| 67. | RMS end effector mockup as used in solar array jettison test | 113 |
| 68. | Crewman installing portable grapple fixture to solar array | 114 |
| 69. | Portable grapple fixture with location of proposed holes | 116 |
| 70. | RMS mounted foot restraint | 117 |
| 71. | SI C&DH transfer using the RMS mounted foot restraint | 118 |
| 72. | Axial SI transfer using RMS mounted foot restraint | 119 |

TECHNICAL MEMORANDUM 82485

# SPACE TELESCOPE NEUTRAL BUOYANCY SIMULATIONS - THE FIRST TWO YEARS

## 1.0 INTRODUCTION

### 1.1 Purpose

This report presents the results of simulations conducted at Marshall Space Flight Center (MSFC) to determine crew compatibility with, and functional operability of, various Space Telescope (ST) mechanisms and to define the type and location of crew aids to be integrated into the ST. These simulations were undertaken as a normal part of progressive systems analysis that began with relatively low fidelity mockups of ST which later evolved to trainer fidelity within the 24 months that marked the beginning and end of testing.

This report was prepared with the knowledge that future endeavors which may be similar to ST in the areas of the crew/systems interface can benefit from the findings presented here.

### 1.2 Scope

A chronological approach to simulation history and hardware development is to be presented in this report to illustrate the correlation between a changing scheduled/contingency maintenance philosophy and its influence on testing and crew aids development.

Crew aids are discussed from the identification of their need to the final product through a series of iterative stages in their development. Various mechanisms are discussed with their acceptance/rejection criteria. Entire subsystems which are thought to be replaceable on orbit during scheduled or contingency maintenance are tested to determine if they are indeed Orbital Replaceable Units (ORUs).

### 1.3 Significant Results

The consequences of ST testing have proven to be enlightening in areas not specifically associated with ST. The quest for a crew aid, e.g., a foot restraint, which meets the requirements of high flexibility, low weight, and ease of operation has resulted in a device which could be adapted for use in any number of operations conducted as Extravehicular Activity (EVA) operations. Likewise, the requirement for versatile tools has yielded not only a unique manual ratchet wrench, but also illuminated the need for a power tool to relieve crew fatigue and accomplish one-handed tasks. In short, the crew aids developed to meet the requirements of ST are being used as starting points of new projects and the successes in solving crew systems problems will become baseline for future efforts.

## 1.4 Summary

This discussion briefly summarizes the results of neutral buoyancy simulations conducted to finalize ST crew aids and mechanism design. While this listing is not all inclusive, it does identify categories of results which will be discussed at a greater depth in the body of this report.

a) The extended use of hand tools to accomplish tasks over a period of time results in hand and finger fatigue. A power tool would eliminate this problem.

b) Any foot restraint design needs to be adjustable in pitch, elevation, roll, and yaw.

c) A unique set of tools has been developed to meet specific needs during ST EVA. These tools, however, could incorporate features to make them compatible with any EVA task on future projects. Corollary: tools designed to meet ST EVA requirements would be acceptable to EVA tasks on other projects.

d) Any ORU transfer device should provide adequate restraint during the transfer evolution from the ORU Spares Carrier to the ST.

e) Devices employing threaded fasteners which are operated during EVA should have sufficient friction built into the fastener to allow wrenches to ratchet and to prevent back turning.

f) Feedback devices are needed to indicate when Scientific Instrument (SI) alignment mechanisms are fully seated and engaged in cases where alignment is critical and capture mechanisms are hidden from view.

g) Massive ORUs (i.e., Axial and Radial SI and Fine Guidance Sensors) are guided into/out of their flight environment by guiderails. These rails must provide constraint without binding or the imposition of high dynamic loads on the rails.

h) The Remote Manipulator System (RMS) is a useable jettison device.

i) A piece of Space Support Equipment (SSE) known as the Portable Foot Restraint is used to provide an extremely versatile and portable workstation from which the crewmember can carry out any assigned task. This item is mountable in any location on the ST equipped with a simple 12-point socket.

## 1.5 Background

The distinction between planned maintenance activities and contingency operations should be stated as it effects the neutral buoyancy simulation program. The use of the Neutral Buoyancy Simulator (NBS) provides an opportunity to conduct real time operations on full scale mockups for the purposes of (1) determining the validity of conceptual hardware configurations, (2) gain experience in the performance of tasks to be done in space, and (3) to identify the necessity and location of crew aids necessary to accomplish assigned tasks. It is in this investigative third area that the difference in planned and contingency operations begins to dictate policy. Planned maintenance activities have a probability of occurrence of 100 percent and will be the object of careful empirical crew aid determination. A practical application of this principle is seen in the fact that since we know the crew will have to change out

an ORU the size of a telephone booth, crew aids must be available to support this task. On the other hand, a task such as the aperture door jettison, which would only be done should the door fail to close on its own, has crew aids located by analysis only. While this approach may appear to offer a superficial solution, it has merit. First, all crew aids located in this manner were done after the simulations aimed at determining the planned maintenance crew aids locations. Thus, a wealth of information was gained about the use and operational limits of Portable Foot Restraints. Secondly, the contingency mechanisms to be accessed via analytically derived crew aid locations are simple and unhampered by neighboring structures. To be more specific, the essence of the task is to put a wrench (socket) on a fastener and turn it with no obstructions to hamper the crewmembers access to the fastener. This relatively simple task, when considered in light of its low probability of actually being undertaken, could not reasonably justify the expenditure of funds towards a mockup or the simulation time dedicated to its real time operation.

The development of mockups which support neutral buoyancy simulations is also a progressive effort towards furnishing high fidelity hardware on which the crew can train for actual missions. The mockups begin as relatively simple, low fidelity facsimiles and, over the course of several months, are updated and refined to a degree of fidelity in which crew interface items reflect current flight designs in appearance as well as function. Thus, the expenditure of funds is for hardware to meet two requirements, i.e., to support neutral buoyancy simulations and provide a trainer fidelity mockup on which the crew can train. This optimum use of the training hardware dollar also has another obvious benefit. During neutral buoyancy simulations, the crew is being exposed to the same hardware on which they will later train. Thus, an erudition of ST mechanisms and hardware is bolstered by meaningful hands-on experience.

## 2.0 DISCUSSION

The ST, by virtue of its complexity and mission, has been designed to be maintainable on orbit by crew EVA. In addition to the planned maintenance functions there are also a host of contingency operations which would also be accomplished by EVA. It is these planned and contingency operations which have necessitated the comprehensive series of simulations undertaken between August 1979 through August 1981.

### 2.1 Testing Facility

Testing was conducted at MSFC's NBS (Fig. 1). This facility allows the complete submersion of the ST mockup in a water tank which measures 75 ft in diameter and 40-ft deep. It is in this 1.4 million gallons of crystal clear water that test subjects (astronauts or MSFC engineers involved in ST development) are able to don the A7LB space suit and perform the various tasks in a simulated weightless environment (Fig. 2).

The A7LB space suit is slightly bulkier and less flexible than the suit to be worn by crewmembers who will work on ST. It is reasoned that any task which was accomplished by subjects wearing the more restrictive suit will be possible by a crewmember who wears a suit with enhanced flexibility.

The testing facility is equipped with a control room from which the simulation is supervised. This room also houses test subject monitoring equipment in compliance with established safety regulations. Video tape and communication recorders provide a permanent record of complete tests from mobile and fixed underwater cameras and the subjects personal communication system with test conductors.

## 2.2 Mockups and Support Equipment

The initial neutral buoyancy test conducted August 1979 utilized a full-size mockup of the Support Systems Module (SSM) aft shroud positioned in such a way as to simulate its relationship to the Orbiter payload bay mockup (Fig. 3). The total complement of equipment used in this test included mockups of:

Focal Plane Assembly Structure

Fixed Head Star Trackers (FHST) with separable Light Shields

Rate Sensor Units (RSU)

Equipment Shelf

SSM Aft Shroud

Payload Bay

Support Structure (mockup peculiar)

Adjustable Foot Restraints

Crew Aids (handrails and tethers)

Tools (ratchets with various extensions and sockets)

Wide Field Planetary Camera (WFPC)

Fine Guidance Sensor (FGS)

Clothesline (ORU Transfer Device).

In November 1979, testing continued on the modified RSU/FHST and added to the list of mockups was the Axial SI. Also used for the first time in ST testing was a pneumatic (power assisted) ratchet wrench.

The axial SIs had four unique mechanisms associated with their removal and replacement which were tested for acceptance. They were electrical connectors, guide-rails with focal plane assembly and aft shroud extensions, a preload subsystem, and a latching subsystem.

The final complement of ST mockups was delivered in November 1979 for Solar Array tests and mated with the existing mockups to have a height which was just 5 ft below the surface of the NB tank when the mockups were assembled on the tank floor 40 ft below (Fig. 4). These items included:

SSM Equipment Section

Forward Shell

Light Shield (not full length to preclude emerging from water)

Solar Array

Jettison Clamp

Aft and Forward Latches.

All mockup items listed in this section up to this point were used in the first set of simulations and provided the first opportunity for a full scale, simulated zero-g attempt at manipulation of proposed mechanisms and equipment configurations. This initial look at the mockup provided engineers with a series of clear cut objectives which would precede any further testing. The section of this report which follows will examine each subsystem and describe the developmental iterations involved in it's acceptance from late 1979 to the present.

## 2.3 Subsystem Development

The subsystems under consideration during ST development testing are listed below. The pertinent history of development which is relevant to the final design for each system will be discussed. In the case of ORUs, the crew task associated with each unit will also be briefly discussed as it applies to mechanism and crew aid development.

### 2.3.1 Axial Scientific Instrument (SI)

The four Axial SIs not only have the unique distinction of being the largest and most massive among the complement of ORUs, they are also the most massive objects ever to be manipulated in the history of the U.S. space program. Their length is approximately 86 in. with a volume of 62 $ft^3$ and a weight of up to 700 lb. The size and mass of these ORUs presents a problem in handling which is compounded by the fact that there are surfaces on the SI that are very sensitive. Each Axial SI has four vertical handrails on its surface and Ground Support Equipment hardpoints on either end which are the only points at which the SI can make contact with either crew or guiderails in handling. In addition, there are three points, identified as A, B, and C, on the top and bottom of the SI which are mating, alignment, and locking fixtures and used only for those purposes (Fig. 5). The removal/replacement evolution of the Axial SIs requires the efforts of two crewmen located in portable foot restraints. An electrical connector must be disconnected and stowed for SI removal followed by release of the three latches in the latching subsystem. The SI is restrained from movement by a small spring force (Fig. 10) which is integral with the upper guiderail. After the crewmembers reposition themselves for SI removal, the SI is pulled out of its restraint and moved along guiderails toward a position outside the aft shroud where it is free from any restraint and berthed with SSE. The installation of the spare SI is carried out in reverse order.

The location of the electrical disconnect socket is such that the job of connecting/disconnecting it must be a one-handed operation. When this task is carried out with one hand, a ground strap with a keyhole slot is slipped over a bolt which is then tightened to a specified torque. The problem with this procedure is that the ground strap end fitting begins to rotate when torque is applied to it (Fig. 6). If allowed to rotate enough, the ground strap can be damaged. This precipitated the need for a device that would allow the ground strap end fitting to be located on the keyhole bolt and restrained from rotation during the application of torque. The anti-rotation device that met these requirements is shown in Figure 7. Electrical connections are made by the crew on the electrical connector panel at the base of the SI. All electrical connections are made by use of a wing nut connector. This design allows the connections to be made or broken by using one hand. The connectors (Fig. 8), are large for use by the EVA pressure suit glove and require

only one-fourth turn to lock or unlock with spring detents to prevent inadvertent operation. The problem of ground strap rotation is not unique to the Axial SI but is common to the ORUs that utilize a grounding strap such as the WFPC (Radial SI).

The grounding strap installation task on the Radial SI is simpler in that it is not necessarily a one-handed operation. Nevertheless, the use of the anti-rotation device serves to avoid possible damage to the ground strap should it slip from the crewman's grasp during the torquing procedure.

The Axial SI guiderails were responsible for the most time dedicated to a single development item. There were two guiderails mounted to the Focal Plane Structure which guided the Axial SI from rub strips mounted at diagonal corners of the SI. The most common problem encountered with the translation of Axial SIs within the confines of the guiderails was a binding or jamming once the massive SIs got out of alignment with the rails. Three different rail designs led to the type as shown in Figure 9 which provided guidance and enough stability to prevent SI jamming. The inner top rail also included a circular spring made of berylium copper (Fig. 10) which restrained the Axial SI up in the preload position until manually lowered from the circular spring restraint and allowed to move in the guiderails. As the SI rub block rises in the guide cutout (A), it displaces the berylium copper spring (B). When the block rises high enough, the spring is allowed to return to its normal position which holds the SI in the up preload position (C), where it may now be captured by registration fitting A. This fitting is a simple ball and socket joint which is activated by a ratchet drive accessible to the crew. When the ball atop the SI is driven by the preload plunger up against the stop in the clamp, the ball portion of point A is within the two halves of the opened capture device. By rotating the hex-ended shaft, the jaws close on the ball, thus capturing the ball and positively locking the SI in its critical alignment position (Fig. 11).

### 2.3.2 Radial SI

The WFPC is the Radial SI, so called because it is located radially from the ST V1 axis. While differing greatly in configuration from the Axial SIs, the WFPC removal/replacement evolution progressed smoothly from lessons learned in the Axial SI development series caused by characteristics common to both devices (Fig. 12).

It can be seen readily that the WFPC removal/replacement task is simpler due to three facts: (1) the WFPC is smaller, (2) access to the SI is from outside the aft shroud with very good visibility, and (3) access to the registration fittings is unrestricted.

Crew workstations for the Radial SI task were easily identified at the surface of the aft shroud on each side of the Radial SI. As shown in Figure 13, these positions allowed the crewmembers access to all fittings and still allow the removal of the SI which must be slid out from the aft shroud radially on the guiderails. The "face" of the Radial SI is a large radiator and not available to the crew for use as a handhold. In spite of the fact that this large surface was off limits to the crew, the instrument offered handholds integral to the SI support structure that were located towards the "back" of the instrument. These, however, did not aid in the initial stages of SI removal. For this purpose a removable handhold plate was fitted to four standoffs in the center of the Radial SI radiator surface (Fig. 14). This piece of SSE is attached to the radiator as an EVA activity at the beginning of the removal activity and removed after the replacement SI was successfully installed.

The sensitive mirror on the back of the WFPC requires a cover which is installed by the crew as soon as the SI is removed. The cover can be installed by one crewmember using one hand while the SI is held by the other crewmember (Fig. 15).

The WFPC has two registration fittings which serve to secure the SI, provide proper critical alignment and mate electrical fittings. Unlike the Axial SI, the WFPC has no need for any type retainer spring or any other device to hold the SI in a "pre-load" position prior to securing by points A and B. Also, unlike the Axial SI which requires a crew activity to provide electrical connections via several electrical connectors, the two halves of a ganged electrical connector are lined up and ready for coupling when the WFPC is fully installed in the aft shroud. When registration fitting A (point A) is fully torqued, point B is torqued, drawing the two halves of the electrical connector together. A separate task is required to install the electrical ground strap to the surface of the WFPC as in the Axial SI ground strap installation.

### 2.3.3 FGS

The ST has three FGSs mounted radially in the aft shroud on the ±V2, -V2, and +V3 axes (Fig. 16). They closely resemble the WFPC in configuration except for the absence of the radiator found on the WFPC (Fig. 17). Like the WFPC, they are inserted and removed by two guiderails which interface with the instrument on each side and they each must be fitted with the handhold plate to allow for crew access. Access to the instruments is more difficult than the WFPC in that the FGS lies inside the aft shroud and is only accessible through doors which must be opened by the crew. This presented a problem in simulation testing. The efforts of the simulation engineers were directed toward providing a foot restraint location which would (1) keep the crewmember's body out of the way of the wide doors during opening and closing and (2) allow the crewmember to get close enough to the surface of the aft shroud to reach inside and perform tasks on the FGS which is recessed inside the surface of the aft shroud approximately 12 in. (Fig. 18). Registration fittings are similar to those used on the Radial SI and are accessed by the crew on each side of the FGS's face. A ganged electrical connector which attaches to the left side of the FGS face supplies all electrical connections and is a crew interface item (Fig. 19). Although not simulated in the tests which comprise this report, it is anticipated that mirror protective covers will be attached to the FGS mirror located on the rear of the instrument as in the WFPC.

### 2.3.4 FHST/RSU

The FHSTs (Fig. 20) are located inside the large doors on the -V3 axis of the aft shroud. Each of the three FHSTs has its own RSU which is considered an ORU and subject to crew removal and replacement. To gain access to the RSUs the conical light shields on each of the startrackers must be removed, thereby complicating the maintenance task. The light shields are large enough to preclude access to the RSUs which are mounted in a section of the equipment shelf, offering little flexibility in their access. Light shield attachment fittings were, by virtue of their location, difficult to get to and therefore designed to be operated with one hand. The area in the aft shroud designated as a workspace for this activity is large enough for only one crewmember so he must work from a foot restraint position which allows him to hold the light shield with one hand while working the fasteners with another (Fig. 21). A fastener assigned by Astronaut Bruce McCandless called a "J-hook" was tested and found to be adequate (Fig. 22). It was designed so that loosening torque tended to

help unlatch it and tightening torque kept the fastener in place on the bolt head. There are three J-hooks located every 120 deg around the base of each light shield. As the edges of the light shield are relatively sharp, covers are to be installed although this was not simulated.

Once the light shields have been removed, the RSUs can be accessed for removal and replacement. Each RSU is secured in place by three hex-head bolts which are integral with the RSU structure (Fig. 23). To aid in the installation process, there are two alignment pins in the base of the RSU which fit into holes in the mounting plate. However, the problem encountered in the RSU installation was not due to alignment but rather to holding the RSU in its position while the hex-head fasteners are fully torqued. This area of development is yet to be resolved.

There are two electrical pigtail connectors which are connected to each RSU. The connector is of the wing tab design used on the Axial SI (Fig. 24). The chronology of the RSU removal/replacement development stands as a testimony to the worth of neutral buoyancy simulations. To recapitulate the events of this series of tests will serve to illustrate this.

The contractor-proposed RSU configuration placed the units in locations which rendered them inaccessible to a crewman (Fig. 25A). In a test report dated August 1979, the results of RSU changeout simulations with and without startracker light shields in place were conclusive; as configured, the RSUs are not ORUs. Figure 26 documents some unsuccessful attempts to access the RSUs. Notice the degree of interference between the crewmember and the environs as he is forced to reach for mechanisms in an effort to utilize tools. Given this revelation, it was incumbent upon the contractor to propose an alternate plan for RSU placement. Several alternatives were suggested with the most obviously workable solution also being the most expensive to implement (Fig. 25B). Because of cost prohibitive nature of the preferred approach, test personnel elected to try another less attractive suggestion which could be implemented with no cost impact (Fig. 25C). Testing revealed the lesser approach workable, although not optimum, to the satisfaction and acceptance of project managment and the contractor. Thus, because the opportunity to test was available, a no-cost alternative to the more expensive, sure-fire solution was implemented.

### 2.3.5 SSM Equipment Section (ES)

The SSM/ES is a 12-sided ring which rests atop the aft shroud and contains 10 bays which are fitted with instruments (Fig. 27). Three of these bays contain instruments designated as ORUs and were simulated for the purpose of testing ORU changeout capability.

Initial testing determined location of handrails necessary to accomplish opening/closing the Bay 2, 3, and 10 doors. In addition, concept latches were built and verified as being operational by one hand. The specific latch design will be covered in a later section of this report. It is worth noting, however, that the trend in crew interface EVA items, whether they be electrical connectors or door latches, is toward designs requiring one-handed operations. This grew out of an early realization that a crewmember may not always be able to use two hands to accomplish a task. Many times one hand must be used to provide crewmember stability during an operation, but at other times the inability to use two hands is a simple anthropometric problem owing to a lack of physical space and the bulk of the EVA suit. ORUs are

mounted to brackets inside the bays or to brackets on the bay doors or a combination of both. Access becomes a problem and the placement of a foot restraint receptacle a matter of careful consideration.

Initial simulations were accomplished to test the concept of ORU changeout and to answer the question "Can it be done?" Often times this was done with crude mock-ups that were nothing more than envelopes but permitted engineers to see if reach was a problem or even feasible. Following the concept acceptance, specific bays, doors, and appropriate ORUs were mocked up to accomplish the changeout task and identify crew aid location.

SSM/ES Bay 10 is located on the left side of the -V2 axis. On the inside of the door is mounted the SI Control and Data Handling (C&DH) ORU (Fig. 28) and inside the bay are located three Rate Gyro Electronics (RGE) ORUs. The SI C&DH is mounted in a fashion typical of the smaller variety ORUs. The mounting fixture is a frame assembly which not only accepts the fasteners that structurally attach the ORU but also provide electrical connections. In a simplified drawing of a typical ORU mounting assembly (Fig. 29), the support is seen to have keyhole bolts (A) which are part of the frame assembly and a torque bolt (B) which seats the ORU in the electrical connectors (C). Once torque bolt (B) has seated the ORU electrical connectors, keyhold bolts (C) are torqued to secure the ORU. The removal process is essentially the same procedures in reverse order.

The removal/installation of RGE ORUs is accomplished in the same manner as the SI C&DH, as all fasteners and electrical connections are identical.

SSM/ES bay doors for bays 2 and 3 house the five batteries which are scheduled for changeout on every maintenance mission (Fig. 30). The batteries are attached to the mounting frame with J-hooks but electrical connections are made by the crewmember connecting an electrical pigtail to the battery end. The FHST light shield test proved the effectiveness of the mounting hardware and the ability of the crewmembers to utilize such mechanisms. The test, then, for battery removal/replacement was accomplished to determine crew aid placement for optimum access to battery fasteners and electrical connectors. Battery envelopes only were used for this test (Fig. 31).

### 2.3.6 Optical Telescope Assembly (OTA) ES

The OTA/ES (Fig. 32) maintenance tasks consist of removing and replacing one Fine Guidance Electronics ORU from each of three bay doors. For this test, one high fidelity ORU was built to be mounted on each of the three doors for the purpose of testing fastener access and determining crew aid locations. The fasteners and electrical connections were identical to those used on the SI C&DH (SSM/ES Bay 10). Once the question of crew access to fasteners was settled, ORU removal and replacement was carried out without incident (Fig. 33).

### 2.3.7 Solar Array (SA)

The first series of SA tests were conducted in December 1979 to evaluate the SA and Diode Box contingency mechanisms accessibility and the jettison capability of the SA. Low fidelity mockups were utilized to test the accessibility of crew interface items and the concept of a manually deployable/retractable/jettisonable SA (Fig. 34).

The SA forward and aft latch mockups possessed sufficient fidelity to allow the crewmember to activate the release mechanism by EVA and therefore verify the jettison concept. The 1979 jettison clamp mockup was functional but not consistent with the then current design. All manual overrides were non-functional.

While the December 1979 test validated the EVA SA concepts, it also brought up the realization that further testing of the SA must be performed on a high fidelity mockup and with the obstacles which are on the surface of the ST in vicinity of SA mechanisms in place. The construction of a high fidelity SA mockup with operable manual overrides was undertaken as well as the electrical cables, latch knee braces, magnetic torquers, and structural rings that are likely to influence the location of crew aids.

The 1979 Diode Box tests were conducted with a mockup which was out of date by the time the tests were conducted (Fig. 35). This condition was the result of not having flight type connectors and reflected a consistent problem which was evident throughout the testing program; namely, that of being forced, through scheduling constraints, to conduct testing before equipment design is finalized by Critical Design Review (CDR).

The results of Diode Box tests revealed a need for consistency in fasteners and several advantageous locations for handholds. A separate section of this report will be devoted to both subjects as they represent a major class of pertinent findings throughout ST testing.

In February 1981, the high fidelity SA, Diode Box, and previously mentioned mockup items were mated to the SSM/ES/Light Shield mockup (Fig. 36). These items led to a renewed and considerably more comprehensive look at the SA/Diode Box EVA tasks. These tasks were all contingency operations which are the result of failures in the SA latches or mechanisms. To illustrate the need for high fidelity mockups of specific SA mechanisms, a brief description of the simulation tasks will be parenthetically added at this point.

The SA is designed to be in either one of two positions, stowed (secure in the forward and aft latches as in the case of launch configuration) or deployed (free from the latches and perpendicular to the body of the ST, as in orbit). There are then three separate points at which a failure could occur to preclude the successful operation of SA. These points are at the forward latch and aft latch, where a failure could prevent deployment or safe stowage, and at the region of the jettison clamp assembly, where a failure of any one of five mechanisms would require crew intervention or jettison (Fig. 37). In order to conduct real-time simulations of these contingency operations, it was necessary to have latches which were near flight fidelity and which operated, for all practical purposes, as flight articles. Furthermore, a high fidelity mockup of the SA was used which was identical to the flight article in the region of the jettison clamp. It is in this area that the crew must manually accomplish the stowage/deployment/alignment tasks by the use of hand tools in the event of a mechanisms failure (Fig. 38).

Crew operations consisted of four basic tasks as illustrated in Figure 39. In addition, considerable time and energy was spent in determining the most opportune placement of the portable foot restraints. (In later stages of development, this task became very important. As the penalty for extra pounds increased, foot restraint sockets were removed as a portion of the solution to the weight problem. As these sockets were removed, crew access was reduced. As this weight reducing crusade continued, there came a point where the loss of further crew aids would jeopardize

the maintenance capability. It became imperative that these few remaining sockets were strategically placed on the surface of the ST in such a way that they provided support to several tasks when used in conjunction with an improved portable foot restraint as requested by MSFC, EL15 engineers and project astronauts. This constitutes a very important result of the entire NB testing program and will be covered at length in a later section of this report.)

Due to the superb quality of the testing hardware, there were very few surprises (brush fires) encountered during the SA tests. A representative from the European Space Agency/British Aerospace was present for the tests and provided valuable technical insights to the workings of the SA mechanisms. The success of this phase of testing was due, in part, to the availability of this representative.

The ST mockup, as configured for the SA tests, is depicted in Figure 40. As previously noted, the quality of the mockup and preceding iterations of testing contributed to a very successful test hardware-wise. Test personnel did, however, note several items which, due to their sublety, were easy to overlook during earlier tests. The following discussion will reveal these findings.

The first observation was revealed when crewmembers were operating the forward and aft latch mechanisms. As handholds are necessary for crew stability and the latches provided a perfect handhold, it followed that they were used for that purpose, even though their use for this purpose was initially discouraged. The conclusion was drawn that it is unrealistic to prohibit the use of forward and aft latch knee braces and trunnion braces as handholds. On every simulation, the sturdiness and easy accessibility of these members led to their use by test subjects, whether intentional or otherwise, as handholds. The corollary could be stated: anything that can be used as a handhold probably will be used, unless there are strong and obvious reasons to the contrary.

The forward and aft latches require the use of wrench extensions for their operation. The wrench/latch interface is recessed within the latch trunnions and inaccessible without an appropriate extension (Fig. 41).

The SA jettison clamp has index marks which indicate the status of the jettison clamp, whether it be secure or loosened to permit jettison. However, this index was out of view of a crewmember when positioned in the foot restraint from which the jettison task would be accomplished. Tests revealed that any visible cue to crewmembers of hardware status need to be located on a face of the hardware which is easily seen by the crew (Fig. 42).

Jettison of the SA, when aided by the RMS, is accomplished through a grapple fixture interface between the RMS and the SA. This item is not a part of the SA and must be installed as a part of the jettison task. This installation, while in itself a simple task, was very difficult due to the poor visibility behind the grapple fixture backplate (Fig. 43). The back of the grapple fixture has a hex stud which must be inserted into an appropriate socket and pinned (Fig. 44). To accommodate the insertion and subsequent pinning operation, it was recommended that a series of 2-in. diameter holes be incorporated in the backplate to provide visibility. This problem is likely to be encountered anytime the grapple fixture is installed by EVA and appropriate action should be taken to prevent the lack of visibility.

All latches which are crew operated should be marked as to the direction of bolt travel to achieve the OPEN/CLOSE position. Furthermore, latch bolt operation should be designed to follow a standard convention; clockwise to tighten/close and

counterclockwise to open/loosen. Additionally, placards indicating direction and number of turns should be added to all crew operated mechanisms (Fig. 45). The success of using the RMS as a means of jettisoning the SA suggests that the SA could be replaced on orbit although it is not currently considered to be an ORU. Suited crewmembers were able to accomplish its separation and attachment ot the ST during simulations.

### 2.3.8 Tools

During the series of tests, it became apparent that there was a need for the definition of a baseline tool complement for the ST. This tool kit is basically a set of sockets and extensions based on a manual ratchet wrench. (The need for a power ratchet wrench is great and will be addressed at another point in this report.) The manual ratchet wrench (Fig. 46) evolved out of the unique needs of the suited crewman in a weightless environment. Several early iterations of the wrench were tested and led to the acceptance of the wrench as shown; each iterative step brings the design closer to its final form through testing in the NBS.

Specific jobs were also dependent upon an extension of specific length. This demand was usually the result of one of two criteria: (1) either the remote proximity of the crewman to the mechanisms, or (2) a mechanism to be operated was buried within supporting structures or other hindrances (Fig. 41). The extensions are illustrated (Fig. 47) as they were baselined.

This mention of tools and extensions would be incomplete without revealing one of the most consistent findings during EVA tasks that required the use of a manually operated ratchet wrench. In most cases, there was insufficient intrinsic resistance on all fasteners to back-drive the ratchet mechanism in the wrench. This nullified the advantage of the ratchet wrench, namely, that of being able to operate a fastener with one hand. As a solution, it was recommended that all fasteners which are subject to crew action by manual ratchet/socket tools have a nominal inherent resistance of 8 to 10 in.-oz to provide friction to back-drive the ratchet mechanism.

The value of having one hand free while operating mechanisms was a lesson learned with some degree of discomfort by test engineers during the early stages of testing. In consonance with Newton's third law, the force exerted to keep a ratchet tool in a fastener, however slight, is maintained with the crewmembers legs if a hand is not available to grasp a handhold (Fig. 48). Specifically, the shin muscles are used and rapidly exhausted. This can be experienced by rotating the feet upward toward the head by contraction of the muscles at the front of the legs between the knee and ankle. By holding this position for 15 sec, the degree of fatigue that can be induced during a 2-hr simulation can be appreciated. The strain and associated fatigue can be relieved by either of two means: (1) tether the crewmember at the waist to the work station, thereby limiting his movement away from the workstation (this necessitates a point on the surface of the vehicle to which a tether can be attached) or (2) allow free hand to grasp a near object and stabilize the subject while the work is being done. Foot restraint articulation can greatly enhance the crewmembers effectiveness in conjunction with the above considerations and is discussed in paragraph 2.4.

### 2.3.9 High Gain Antenna (HGA)

As no mockup of the HGA existed of sufficient fidelity to permit the actuation of mechanisms, the extent of simulations were to locate crew aids. Furthermore, the initial stab at crew aid placement was done without the benefit of even the crudest mockup.

Much was learned in the detailed and lengthy study of the SA and its mechanisms. This provided a basis for the assumption that, because the SA and HGA are similar in mechanical function and operational tasks, a reasonable determination of crew aids placement could be made by analysis. For this analytical task, the worst case HGA was used; namely the HGA located on the -V3 axis. The aft mechanism and jettison clamp for this antenna are located in close proximity to the OTA-ES on the -V3 side and these ES bays would prohibit clear access to the mechanisms (Fig. 49). Testing of the proposed foot restraint socket locations was done by locating the position of the HGA mechanisms on the surface of the Light Shield and simply checking access to this area by a suited subject. These locations, determined sans mockup, were later verified empirically by Johnson Space Center crewmembers. An envelope mockup was fabricated and attached to the Light Shield for this purpose (Fig. 50).

### 2.3.10 Aperture Door (AD)

The confidence gained in the analytical approach to HGA crew aid placement was sufficient to allow test engineers to look at the AD mechanism access with similar intentions. One other factor, more motivating, inspired the analytical approach to AD crew aid placement. Like the HGA, there was no AD mockup. This was not an oversight but directly attributed to the fact that the last 7.5 ft of the Light Shield was not included in the entire ST mockup. If the ST mockup were built in its entire length of over 42 ft, it would rise out of the water in the NBS which is only 40-ft deep. Naturally, any portion of the mockup which is out of the water cannot support neutral buoyancy simulations, so the mockup was terminated at station 520, approximately 7 ft short of full length. The AD, being on the very end of the Light Shield was not included in the mockup inventory. In spite of the lack of an AD mockup. there were factors which contributed to a relatively easy task of locating AD crew aids. First of all, there are no items in the vicinity of the AD mechanisms to hinder crew access. This is very important and is supported by the fact that there are no exotic or hidden fasteners to access. Considering that the subject will have unrestricted access to a simple task, the locations of handrails and foot restraint sockets were made by analysis with acceptance of both project management and the prime contractor.

## 2.4 Portable Foot Restraint (PFR)

The need for an acceptable foot restraint began a quest by engineers to fill the requirement for such an item. Numerous configurations of ingenious design were fabricated and used in neutral buoyancy simulations. More often than not, the ingenious became the infamous and after nearly two years, the search for a PFR to meet the requirements of test engineers was still going on (Fig. 51).

The requirements for a PFR were deceptively simple: to supply a piece of hardware that interfaces on one end with the ST and the other end with the crewmember. The typical Skylab foot restraint provided the crew interface (Fig. 52) and

a female 12-point socket type receptacle was to be designed into the ST at strategic locations to provide the ST interface (Fig. 53). Thus, the problem was confined to the area of the foot restraint to be designed between the two ends. The utmost in simplicity would be to fix a hex stud onto a Skylab foot restraint and call it a PFR. However, its major weakness would be the failure to provide the versatility necessary to accomplish a myriad of chores from one ST mounted socket location. This was the final impetus which drove designers to come up with the current design. It seems that as the ST approached (and exceeded) its maximum allowable weight, a campaign was launched to reduce weight wherever possible and the spearhead of this effort was in the area of crew systems. Test engineers no longer had the freedom to place foot restraint sockets on the surface of the ST at will to provide crew access during EVA tasks. As the penalty for each excessive pound increased, the energy devoted to weight reduction also became greater. The reduction of 3 lb here and there was looked upon with great favor and the removal of eight foot restraint sockets with an average weight (with the necessary support structures) of 3 lb each was enthusiastically received by project management. The value of the NBS was proven time and again during this effort as foot restraint socket locations were determined experimentally from which several tasks could be accomplished...if the PFR were designed with the necessary versatility.

The PFR design and built for use in the ST simulations was basically the same design as supplied by the contractor with more degrees-of-freedom. MSFC test engineers took a design concept, proved it in simulations, enhanced its usefulness by adding to its flexibility and initiated the steps by which this could become the baseline crew aid so desperately needed.

Specifically, in the area between the hex stud and the Skylab foot restraint was fitted a 2-ft long shaft which, in essence, added 2 ft to the crewmembers reach in any direction. Added to this basic cantilevered structure were PITCH (elevation) adjustments on both ends of the shaft, ROLL adjustments around the shaft, and YAW capability at the foot restraint itself (Fig. 54). This crew aid, with the four degrees-of-freedom, provided a nominal work envelope as indicated by the domed area in Figure 55.

### 2.4.1 Foot Restraint Sockets

The foot restraint socket is depicted in Figure 56 in both its formal design and functional mockup. Because the PFR can be installed from either end and articulated to practically any configuration, the socket provides access to any item within a nominal 6 or 7 ft from the socket. Figure 57 illustrates how a single foot restraint socket is used to access four different maintenance areas on the ST. Figure 58 shows the location of all ST mounted foot restraint sockets resulting from NB simulations. Handrails are also shown.

## 2.5 Handrails

Handrails are fixed to the surface of the ST for use as translation devices and also serve as crew stability aids. In the first case, they provide a path of travel across the spacecraft and are the sole legitimate means of moving from one point to another. In the latter case, they are used by the crew to aid in the task at hand by providing support. Often during testing, the need for a dedicated hand hold arose during a task where nothing was available which the crewmember could grasp for support.

Early in the testing evolution, the mockup bristled with handrails and many translation paths were redundant. However, the weight reduction efforts that minimized the number of foot restraint sockets also focused attention on superfluous handrails.

While a section of handrail may appear outwardly insignificant as far as weight is concerned, it must be remembered that when it is removed from the design, its structural supports and mounting hardware are also unnecessary. As in the concentrated efforts to place foot restraint sockets in the locations of optimum efficiency, attention was now turned to handrail placement.

The approach to reducing the number and size of handrails was simple; remove everything that is neither used to go from one workstation to another or used to grasp while doing work. Once the minimal translation routes were established over the ST surface, a determination was made to shorten or remove individual handrail segments. This is possible because most translation routes are composed of many short lengths of handrail lined up to provide a "path" across the vehicle. The use of one long handrail is nearly impossible on the ST surface due to structural members such as ring frames interrupting a longitudinal straight line. The use of shorter segments in these paths was achieved to reduce weight without compromising the integrity of the translation path. The one area where a single length of handrail was possible illustrates the approach taken to minimum handrails/maximum efficiency. Handrail placement on the Axial SI/FHST doors located nearly the length of the aft shroud was arranged so as to provide a full length handrail on each door at the inside edge (Fig. 59A). These handrails were to be a translation route from the aft bulkhead forward and also to serve as an aid in opening the doors. Figure 59B depicts how the new design served the same purposes while reducing the handrail quantity.

The ST retained circumferential handrails at the forward and aft ends of the aft shroud and atop the SSM-ES and OTA-ES as shown on Figure 58. The circumferential handrail at the aperture door was restricted to only the area that would need to be reached by the crew during an aperture door EVA task. Longitudinal handrails were terminated at the forward latch of the HGA or SA with only one path between the +V3/-V2 axis with which to reach the aperture door. A close examination of Figure 58 will reveal short lengths of handrail in the vicinity of foot restraint sockets. These serve to aid the crewmember in placement and articulation of the PFR.

The handrails represented by dashed lines in Figure 58 are located inside the aft shroud and are placed solely to aid in placing/mounting the PFR or as a handhold for the specific job to be accomplished.

The requirements for a crew aid on the SSM-ES and OTA-ES bay doors were met by a knob (Fig. 60). This was used in lieu of a handrail and serves to open and close the doors. Experience during simulations revealed that these knobs are also used as handholds by the crewmember when ingressing the PFR.

## 2.6 Latch Design

Every ORU except the Radial SI (WFPC) is concealed by doors which must be opened and closed by the crewmember. Therefore, door latch operation was addressed in simulations as a normal part of the ORU changeout sequence. Latch design criteria included simplicity and strength; simplicity because the latches were to be operated

as a one-handed task with baseline tools (ratchet wrench) yet strong enough to withstand launch vibration and stresses from applied torque.

Three latch designs were verified by simulations as meeting design criteria and being easily operable by crewmembers. The latch chosen to secure the OTA-ES and SSM-ES doors was the adjustable grip latch (Fig. 61). This latch is located on the edge of the bay doors as illustrated in Figure 62. Operation of this latch is a one-handed task utilizing either a power driven or manual ratchet wrench. Figure 61A shows the latch in the closed position with the rotating latching tab applying the compression force between the bay door and the door jam. To release the latch and open the door, a wrench is placed on the hex fastener and rotated counterclockwise, thereby releasing the compression force. As the hex continues to rotate counterclockwise, the tab eventually separates from the door jam and the spring (shown in Fig. 61A only) rotates the tab up 90 deg (Fig. 61B) allowing the door to be opened. The body of the latch allows the tab to rotate 90 deg only to either the OPEN or CLOSED position. Figure 61C shows the latch up in the OPEN position. To close and secure the door, a clockwise movement of the hex rotates the tab 90 deg down and further torque draws the tab down tight against the door jam. A torque of 90 to 110 in./lb is applied to the hex in the CLOSED position.

The latches which secure aft shroud doors are designed to the same criteria as mentioned above but must provide a different force in accomplishing their function. Whereas the OTA/SSM-ES door latches applied a torque radially, the latches on the massive aft shroud doors are applying a tangential force (Fig. 63A) that holds them together when torque is applied to the fastener. This type latch is used on these doors because of the absence of a support structure underneath the doors at the latch point (Fig. 63B).

This latch assembly is a simple T-bolt which swings into a slotted member on the other door. Once this coupling is complete, the nut or the T-bolt is torqued to the proper value.

A deviation of this very effective latch is the Handle Latch Assembly. This functions in the same way as the Latch Assembly but has a handle to which the T-bolt is mounted (Fig. 64). This handle is designed with an over-center locking feature which allows the crewmember to close the doors and have them remained closed and restrained by the over-center lock until final torque is applied. One of these Handle Latch Assemblies is provided on each door located on the aft shroud. Figure 62 illustrates the aft shroud door latch locations.

## 2.7 Fasteners

The ratchet wrench and all extensions utilize a 12-point, 7/16-in. socket to accommodate the standard fastener for all crew interface items. This fastener is a 7/16-in., 6-point, double hex head bolt as shown in Figure 65. The head of this bolt has been standardized to insure adequate tool availability. Note the nominal 100 deg camber designed to mate with 100 deg countersunk devices such as the J-hook. (Also see Figure 29 for another use of this bolt, designated the "key hole" bolt.)

## 2.8 RMS Related Activities

The RMS mockup was built for institutional use rather than as a dedicated part of ST testing by engineers and technicians at MSFC's NBS. Regardless of its origin, it was readily available during simulations to carry out the solar array jettison task as well as validate some innovative hardware and crew aid concepts.

The mockup is a full size unit mounted to the sill of the Payload Bay Mockup (Fig. 66). It has all the degrees of freedom of the flight article and is remotely operated from a control console located outside the water tank. Attached to the end of the RMS mockup is an End Effector Mockup (Fig. 67) which mates with the Portable Grapple Fixture (PGF). This PGF is an EVA mounted article used in the solar array jettison operation (Fig. 68). The interface between the PGF and the SA is a 6-in. hex shaft which is fitted into a hex female receptacle on the SA body (Fig. 44). A problem arose when the crewmember attempted this installation caused by the poor visibility behind the PGF's large diameter back plate. The crewmember simply could not see to align the hex shaft into its receptacle. To add to this problem, the PGF is retained by the use of a PIP PIN which is installed behind the PGF back plate through the hex shaft thereby prohibiting inadvertant retraction. This PIP PIN installation was even more difficult than the initial PGF placement due to its small size and need for perfect alignment. To provide the visibility needed for both of these tasks, a set of three holes was suggested to be designed into the back plate of sufficient diameter to allow the crewmember to see the area behind the back plate (Fig. 69).

The RMS was used in a unique approach to the problem of crewmember access to the various components of the ST. A PFR was modified and attached to a PGF with the result being an RMS mounted foot restraint (Fig. 70). The PFR was not built with the usual articulation capabilities because of the roll and pitch available at the RMS End Effector. The PFR did, however, maintain a YAW feature which was changeable through 360 deg in 30 deg increments by pulling on a circular knob. This knob was attached to a wire rope which slides inside the stainless steel tube guide. By pulling on the knob, a pin is retracted in the base plate allowing the PFR platform to rotate about a bolt through its center. Releasing the spring loaded knob permits the pin to be driven home into one of twelve holes located every 30 deg around the base plate. The PFR was mounted at a 45 deg angle to the PGF base plate at the recommendation of a crewmember, Captain Bruce McCandless, to enhance versatility. The transfer of two ORUs was selected as a worthwhile test of the devices capability. Captain McCandless mounted the RMS/FR and was translated by the RMS to a workstation where the SI C&DH ORU was removed/translated/installed on its SSM-ES door mounting fixture (Fig. 71). Having accomplished this with no difficulty, the massive Axial SI ORU was next moved with equal ease. As in earlier ORU transfer attempts, all mockups were neutrally buoyant with the greatest resistance to movement being water drag.

It is worthwhile to note that the operational fidelity of the RMS mockup was held in greater esteem after engineers were able to review films of the actual RMS operational tests aboard the recent STS-2 flight of the Space Shuttle Columbia. The same oscillations which are characteristic of the mockup during movement were observed during the workout of the flight article. Rather than being a detriment, this characteristic oscillation only serves to contribute to the overall realism of RMS related simulations.

The RMS is not presently man-rated because of the safety aspects of a man being attached to the end of a movable 40-ft robot arm. But the first step towards that man-rated qualification has been done. Without fanfare, astronaut Bruce McCandless ingressed the RMS mounted foot restraint and translated a 700 lb mass with relative ease (Fig. 72).

## 3.0 CONCLUSION

The opportunity to simulate ST activities has provided engineers with an irreplaceable input to the design acceptance process. An objective look at the development of ST mechanisms, instrument changeout operations, and the entire spectrum of crew interface activities reveals the maturing of an acumen in the area of compatibility between the man and the machine. Furthermore, the NBS environment has been a common ground where contractor and project management personnel can meet and mutually come to grips with areas of difficulty which had hitherto been undiscernable to all except those who are intimately familiar with the design. By real-time observation of operations on high fidelity mockups, one acquires an insight that would be difficult to achieve otherwise. If a picture is worth a thousand words, then it may be said that an opportunity to look over the shoulder of an astronaut in action far surpasses the knowledge gained from any number of charts and illustrations.

To this end, the NBS program has been highly successful. But this does not mark the end of the ST simulation program. Now, engineers are looking into the future and developing the Space Support Equipment that must be available to accomplish the on-orbit maintenance of the ST. Still beyond this task, training of the crews designated to participate in this mission is planned and will be undertaken in the weightlessness of the Neutral Buoyancy Simulator.

ORIGINAL PAGE IS
OF POOR QUALITY

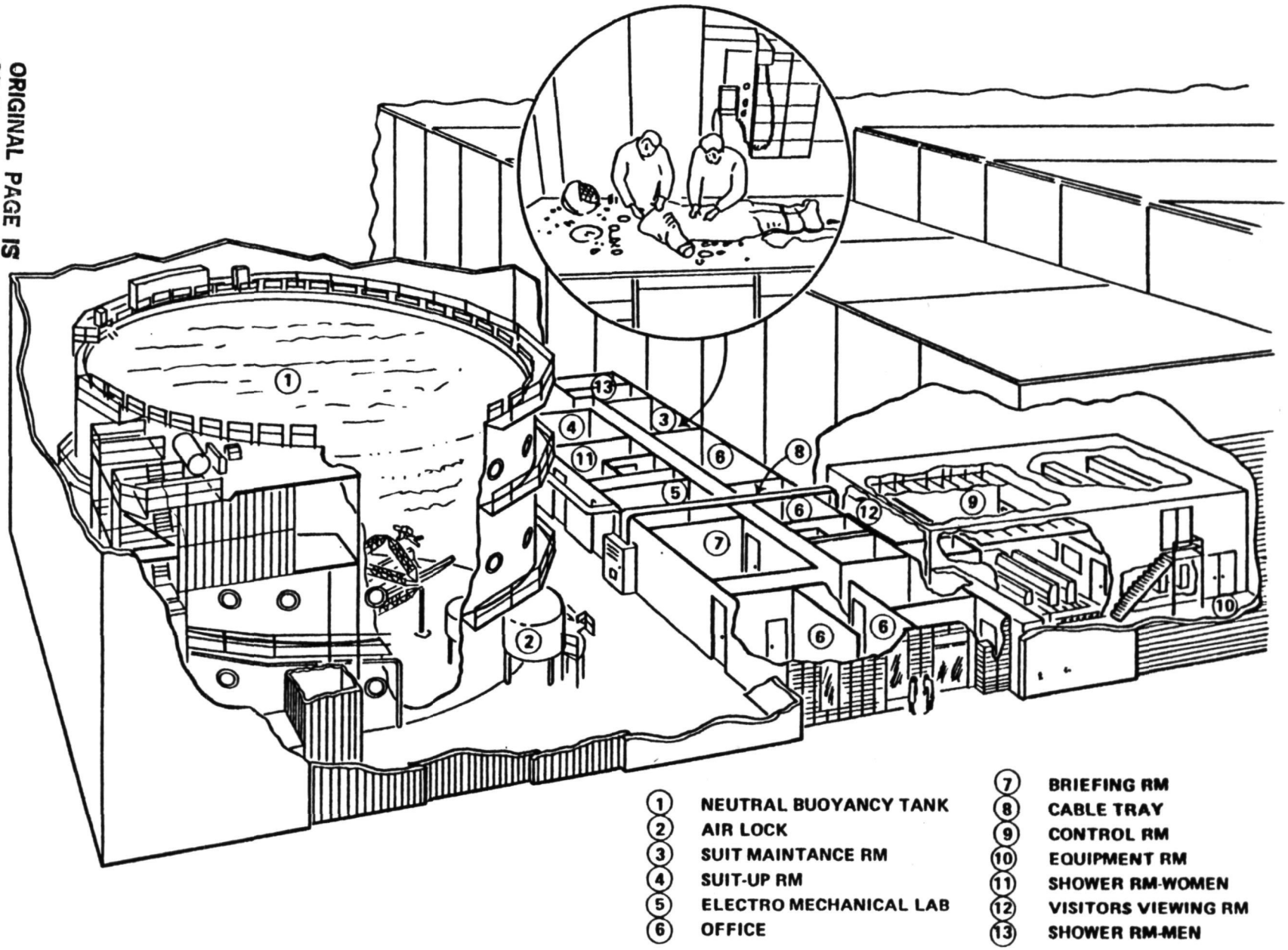


Figure 1. Neutral Buoyancy Simulator complex.

ORIGINAL PAGE IS
OF POOR QUALITY

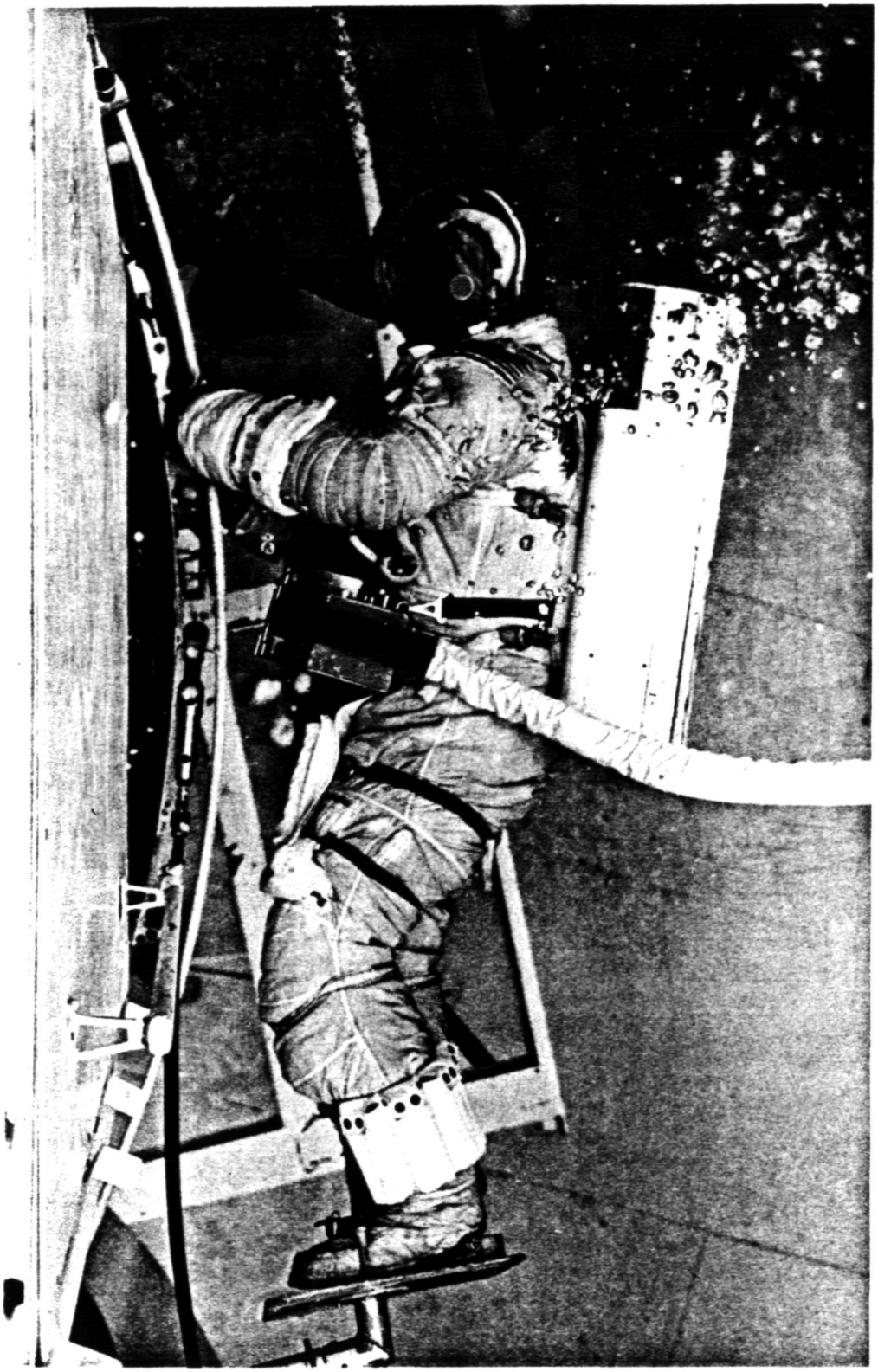

Figure 2. Test subject wearing A7LB spacesuit.

ORIGINAL PAGE IS
OF POOR QUALITY

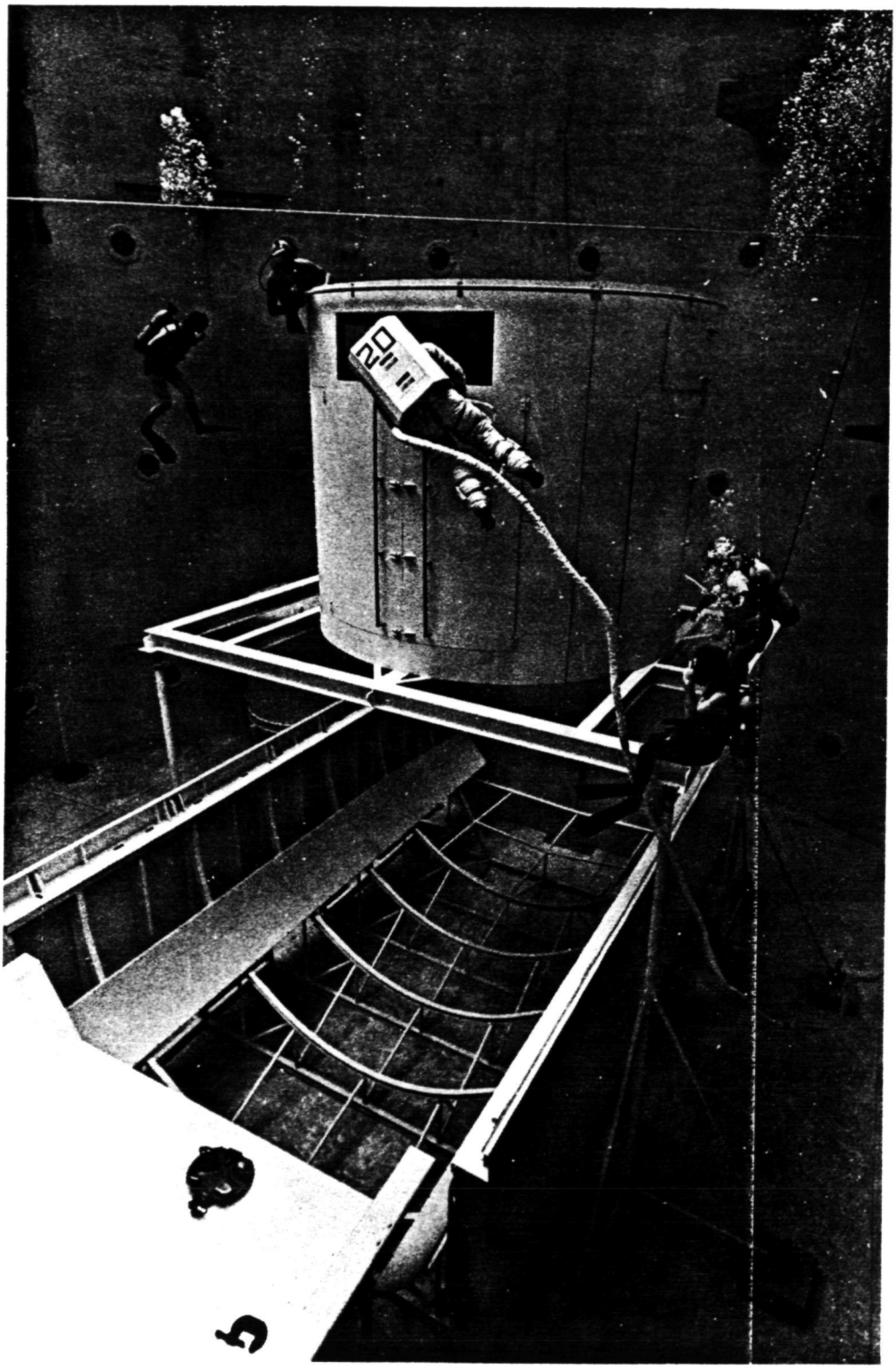


Figure 3. ST aft shroud mockup, August 1979.

ORIGINAL PAGE IS
OF POOR QUALITY

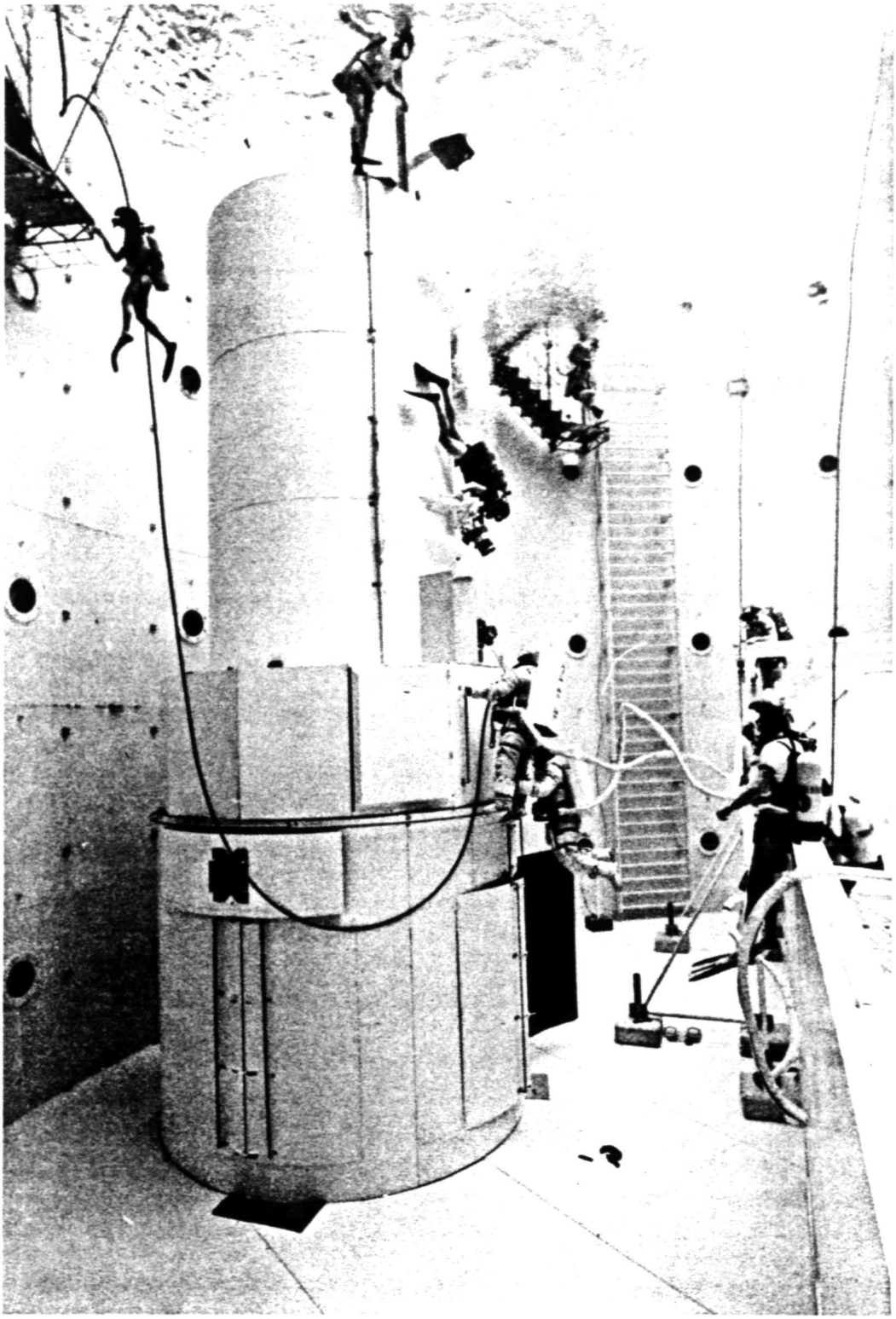

Figure 4. ST mockup, November 1979.

ORIGINAL PAGE IS
OF POOR QUALITY

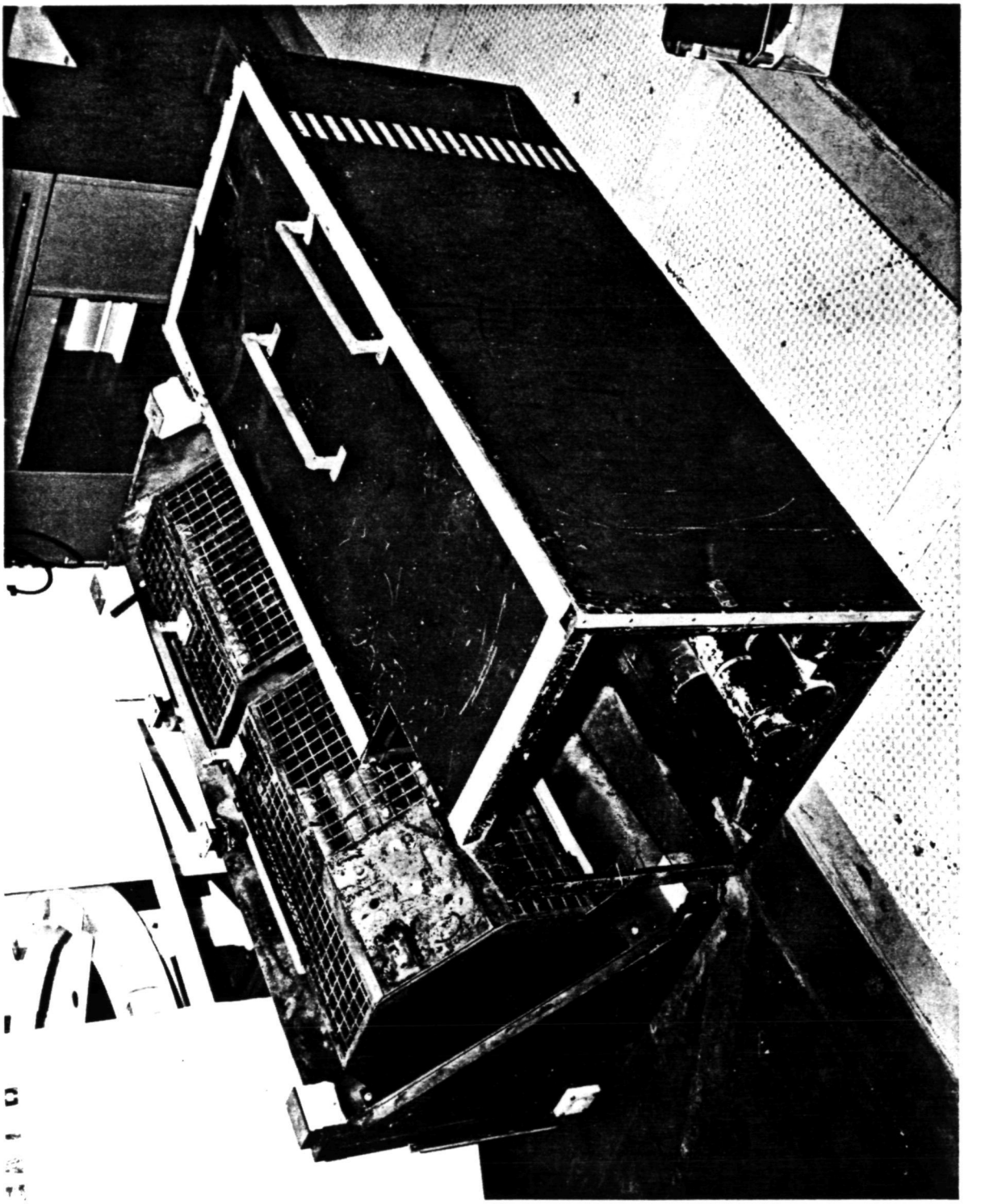

Figure 5. Low and high fidelity axial SI mockups.

ORIGINAL PAGE IS
OF POOR QUALITY

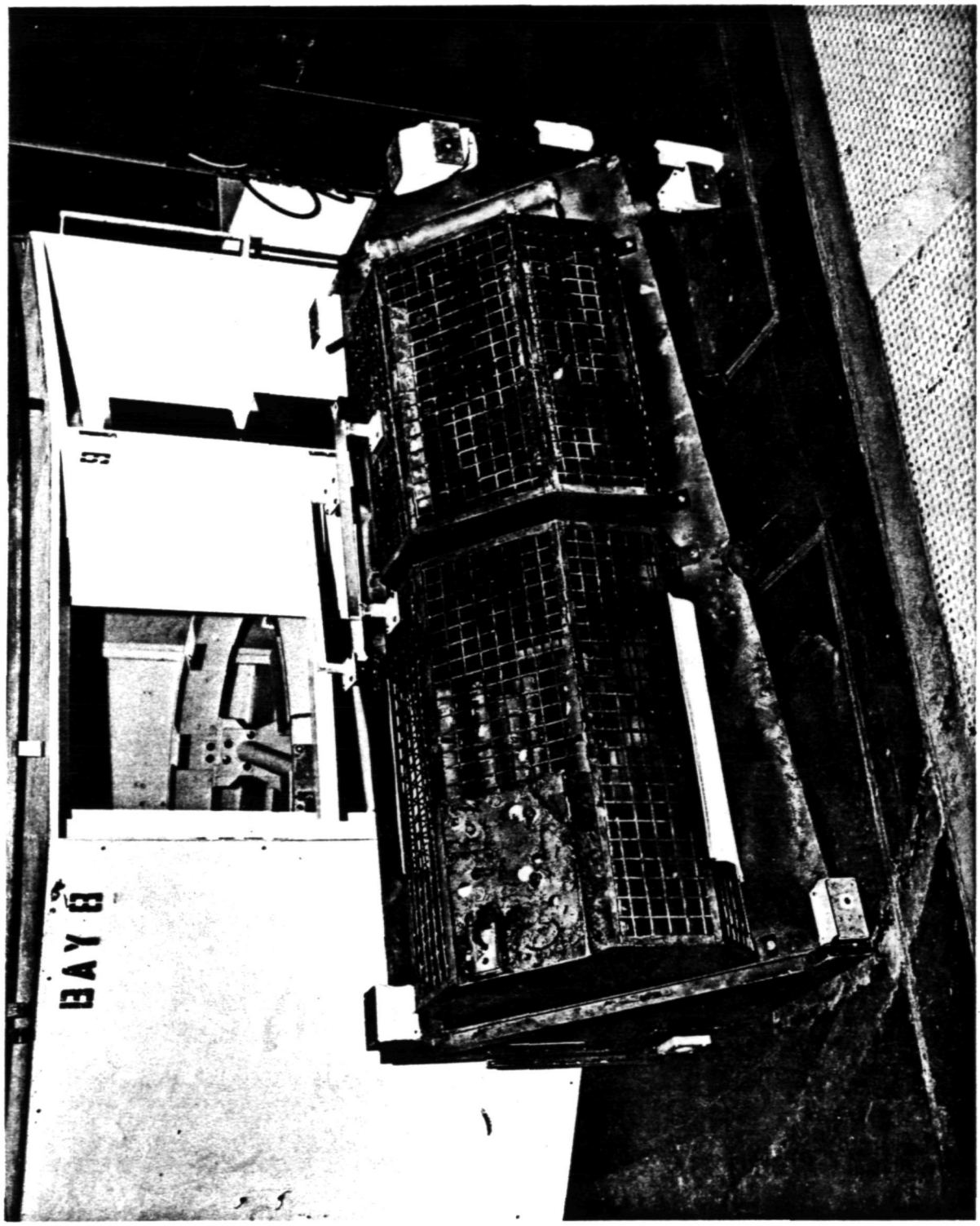


Figure 5. High fidelity axial SI mockup.

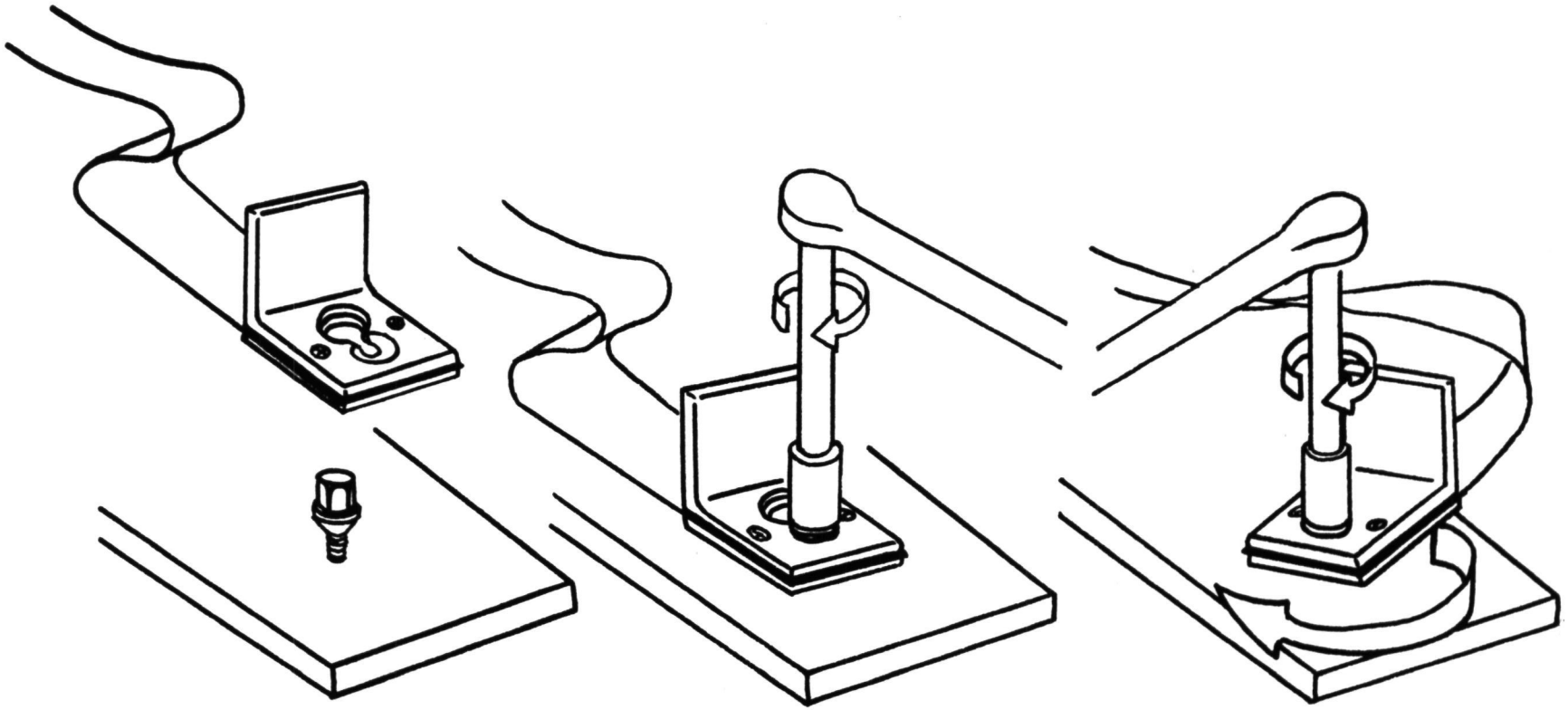

THE GROUND STRAP IS FITTED OVER THE KEYHOLE BOLT

AND THE BOLT IS TURNED TO THE SPECIFIED TORQUE

AS THE TORQUE IS APPLIED, THE GROUND STRAP FITTING ROTATES WITH THE KEYHOLE BOLT, DAMAGING THE GROUND STRAP.

ORIGINAL PAGE IS OF POOR QUALITY

Figure 6. Ground strap rotation problem due to torque.

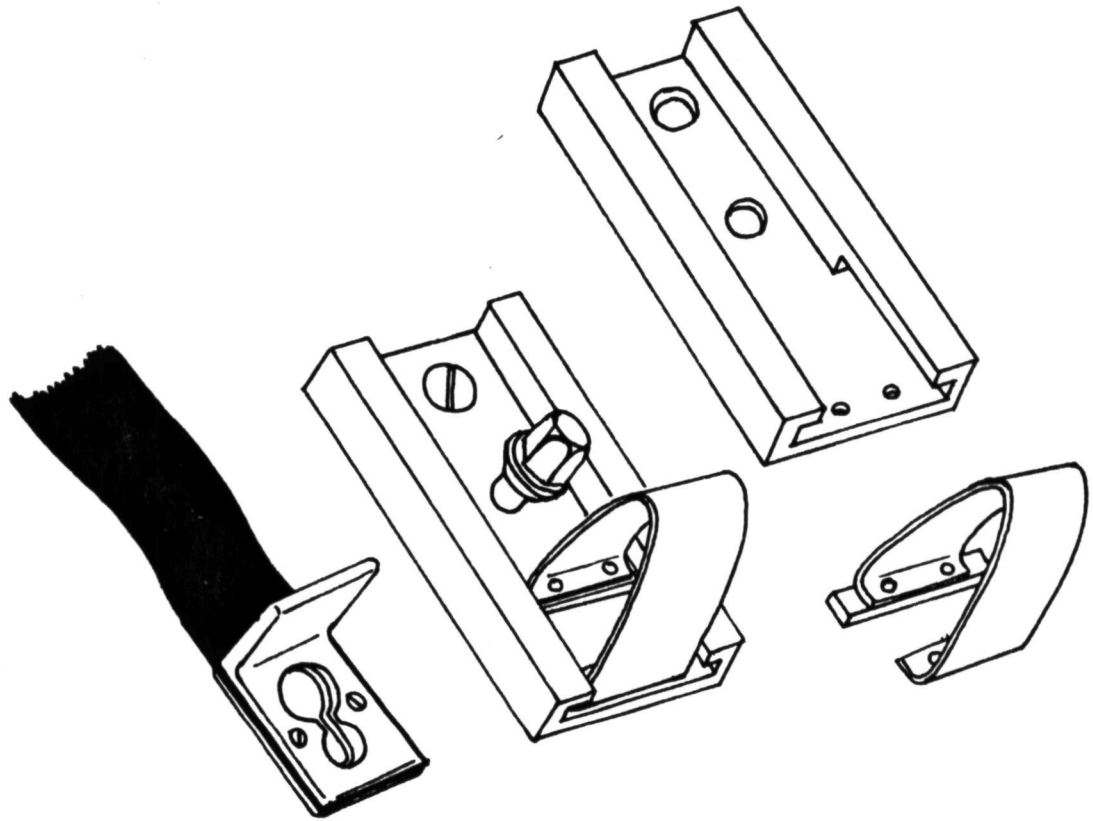

Figure 7. Anti-rotation device as proposed by Astronaut Bruce McCandless.

ORIGINAL PAGE IS
OF POOR QUALITY

ORIGINAL PAGE
BLACK AND WHITE PHOTOGRAPH

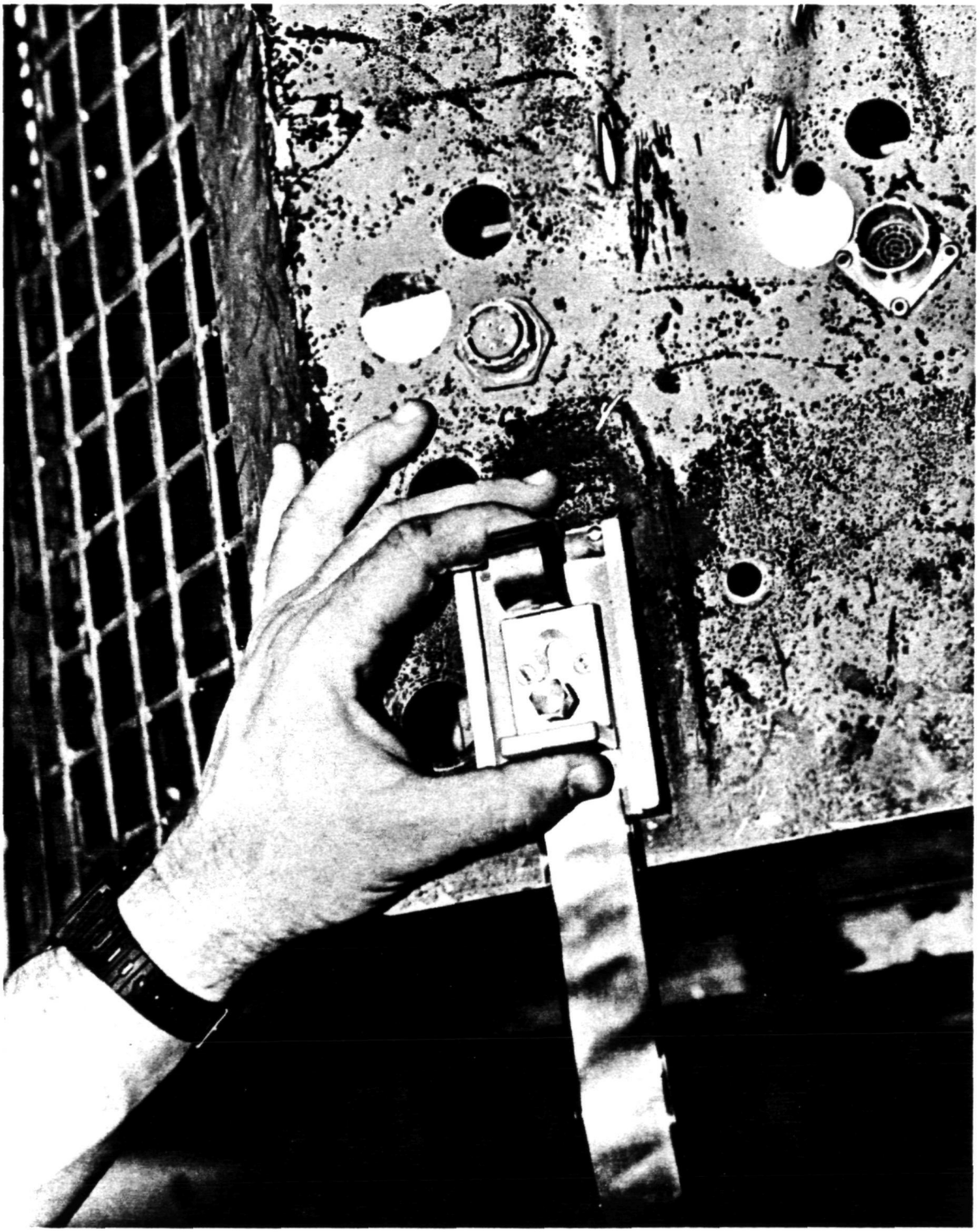

Figure 7. Anti-rotation device as tested.

ORIGINAL PAGE
BLACK AND WHITE PHOTOGRAPH

Figure 8. Axial SI electrical wing nut connector mockup.

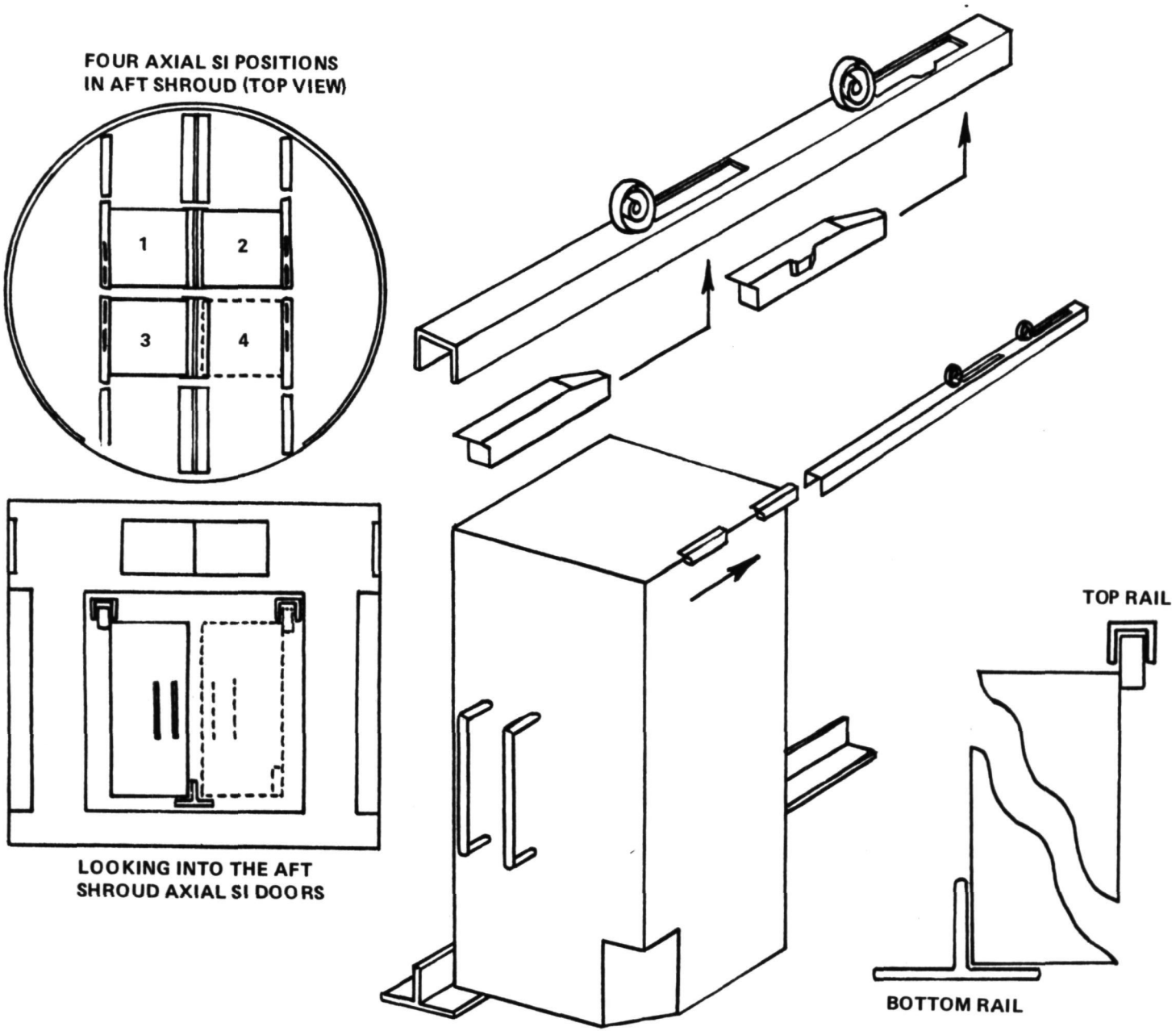


Figure 9. Axial SI rails showing movement.

ORIGINAL PAGE IS
OF POOR QUALITY

ORIGINAL PAGE IS
OF POOR QUALITY

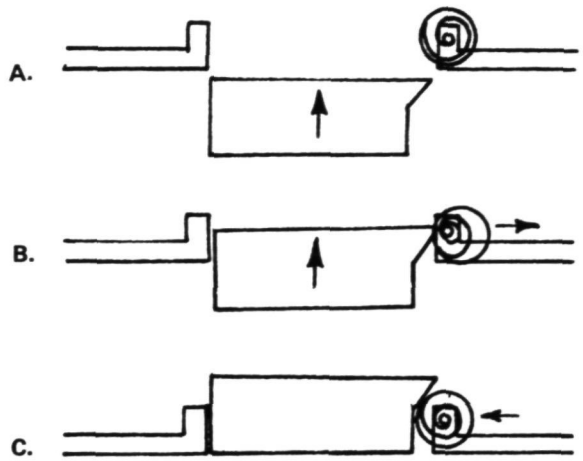


SPRING MOUNTED TO UPPER AXIAL SI GUIDERAIL APPLIES A RESTRAINING FORCE ON AXIAL SI UPPER SLIDE BLOCKS.

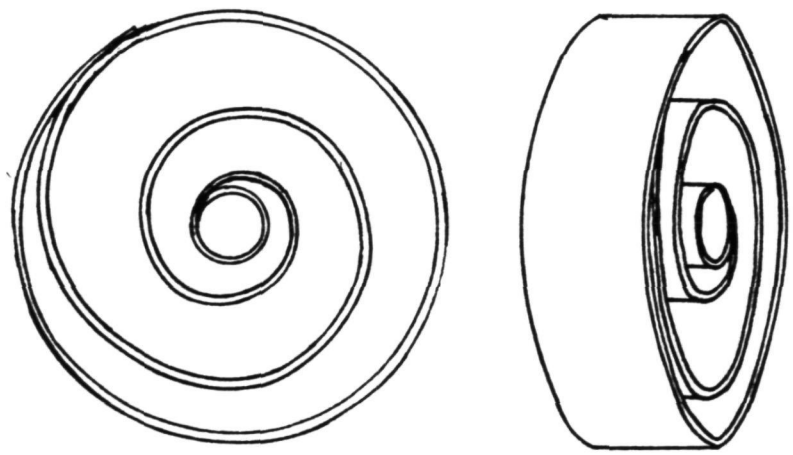

Figure 10. Beryllium copper spring in appearance and function.

ORIGINAL PAGE IS
OF POOR QUALITY

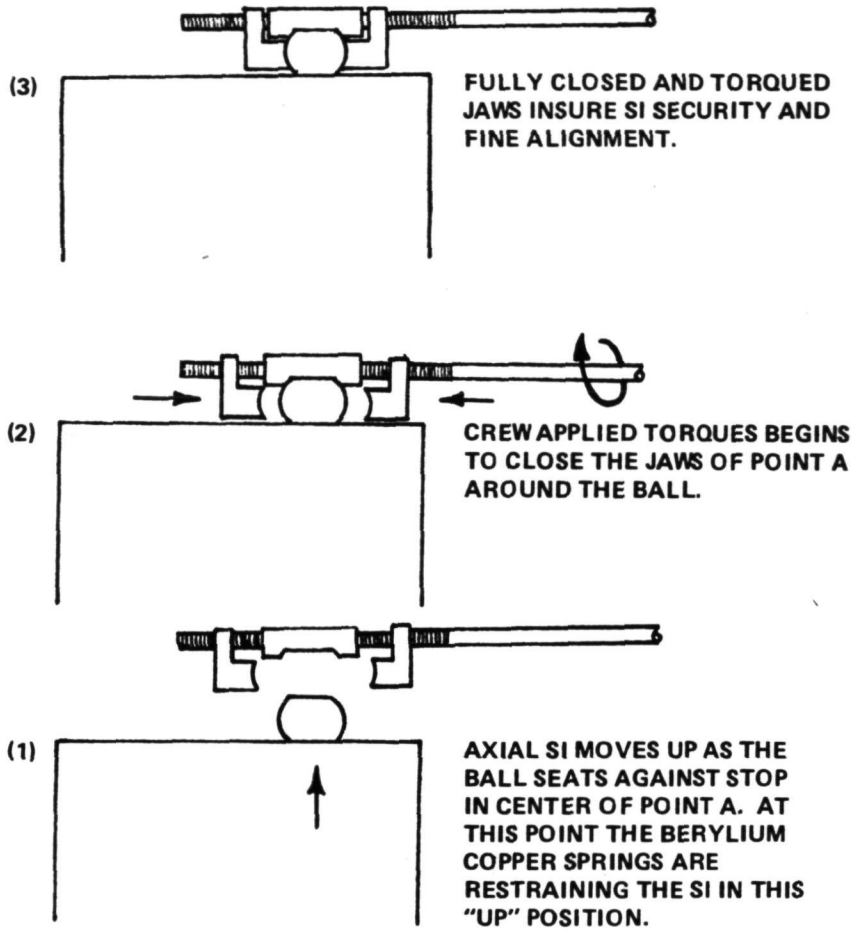


Figure 11. Axial SI point A registration fitting.

ORIGINAL PAGE
BLACK AND WHITE PHOTOGRAPH

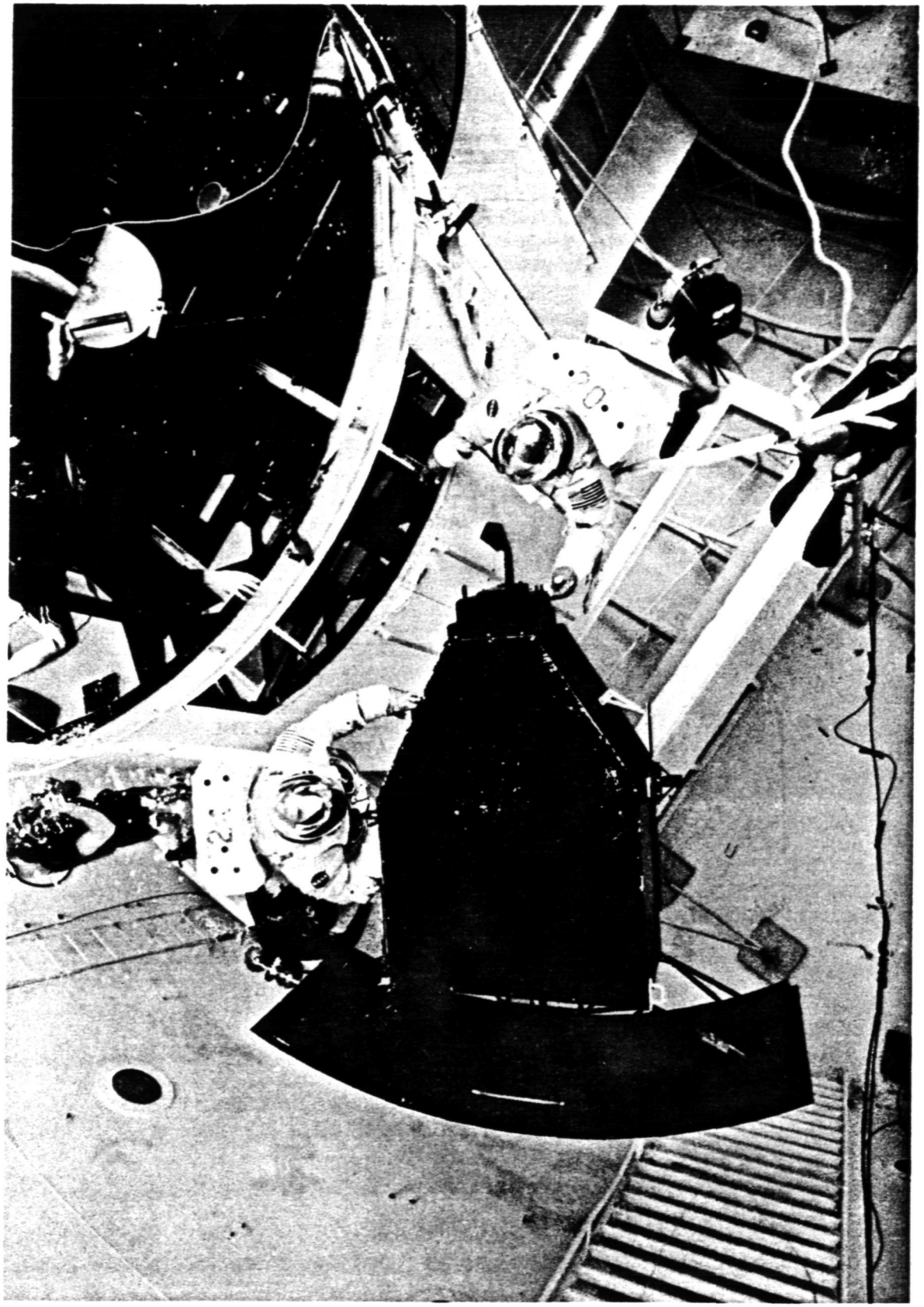

Figure 12. Wide field planetary camera (radial SI) mockup changeout.

ORIGINAL PAGE
BLACK AND WHITE PHOTOGRAPH

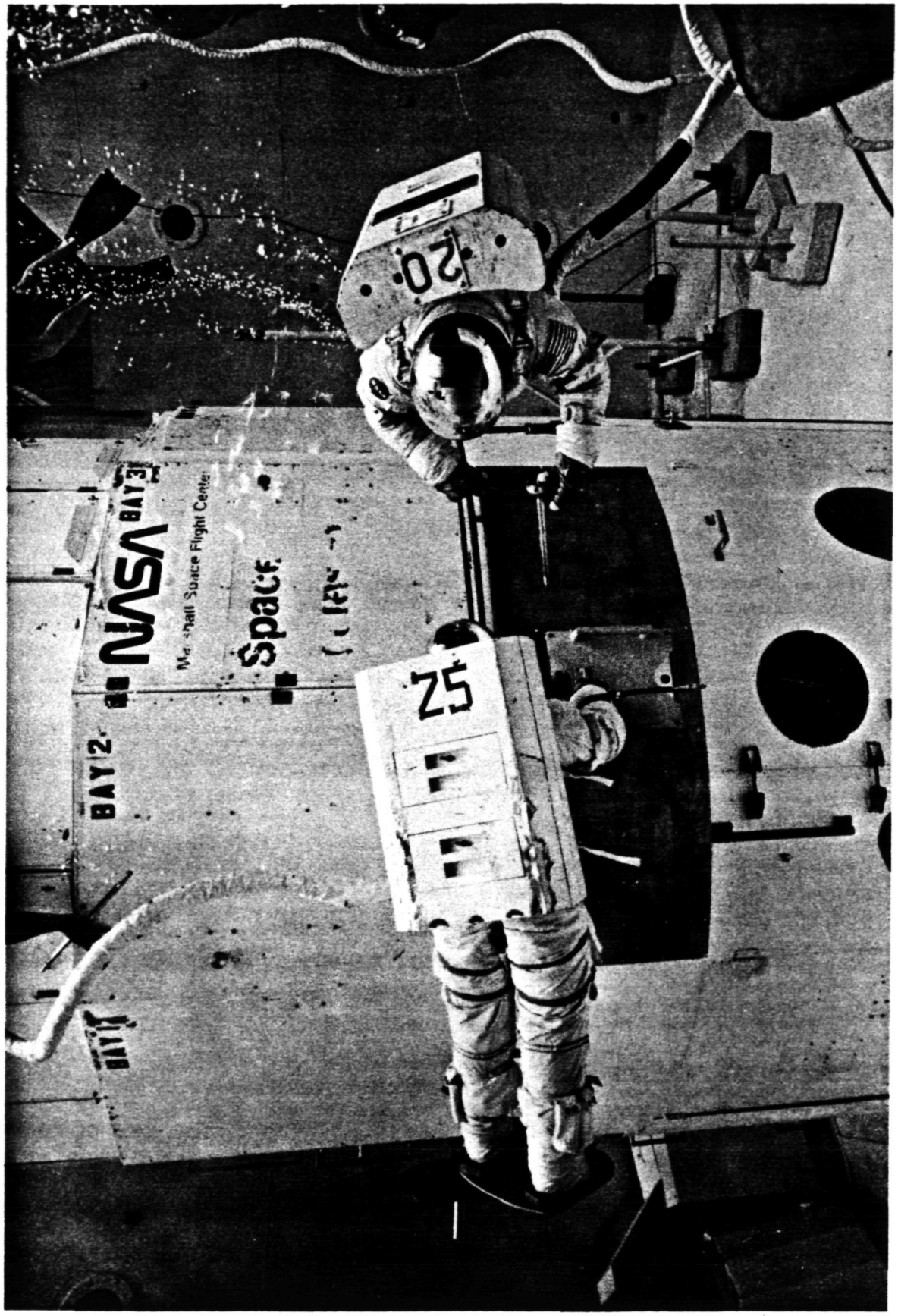


Figure 13. Radial SI workstations.

ORIGINAL PAGE
BLACK AND WHITE PHOTOGRAPH

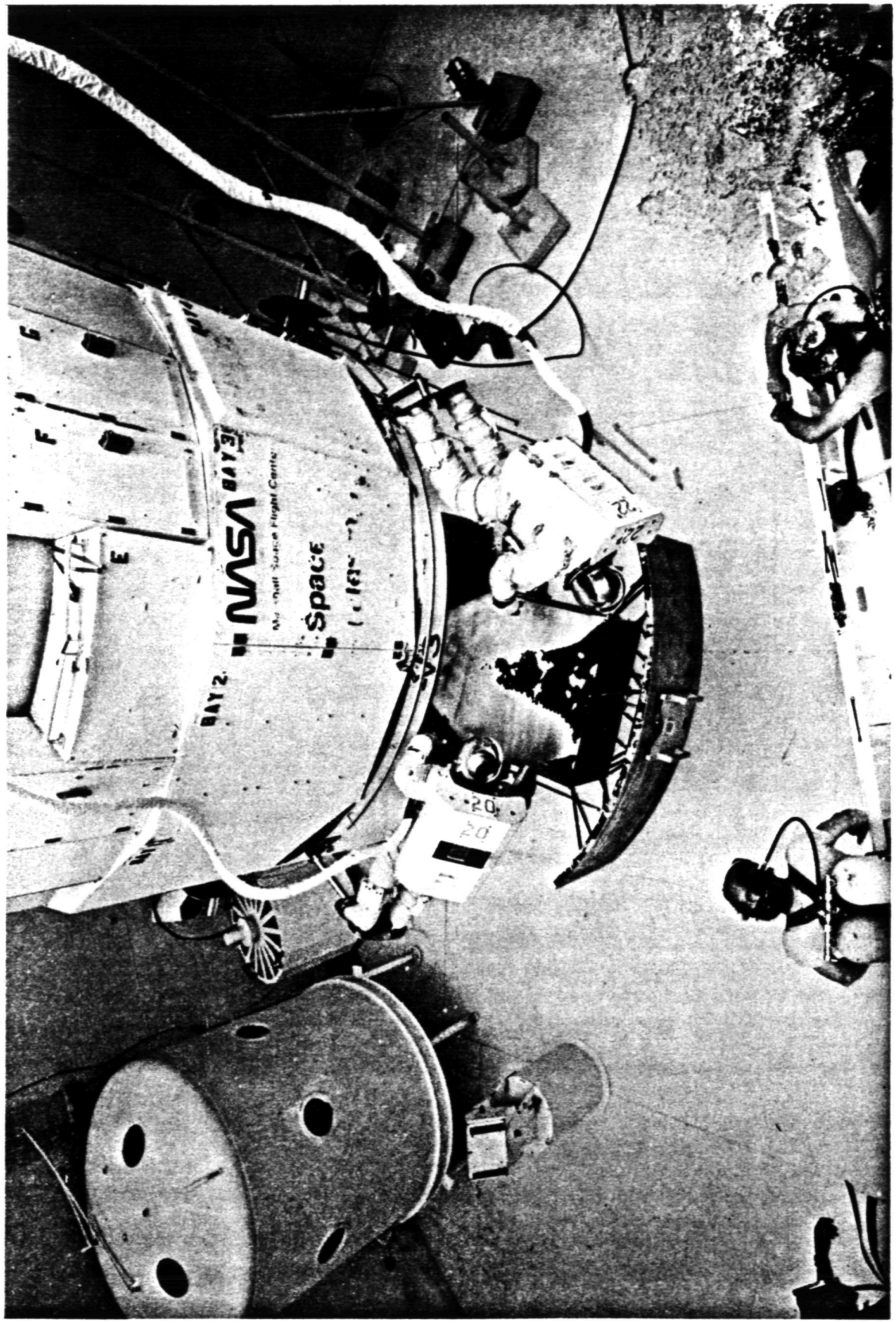


Figure 13. (Concluded)

ORIGINAL PAGE
BLACK AND WHITE PHOTOGRAPH

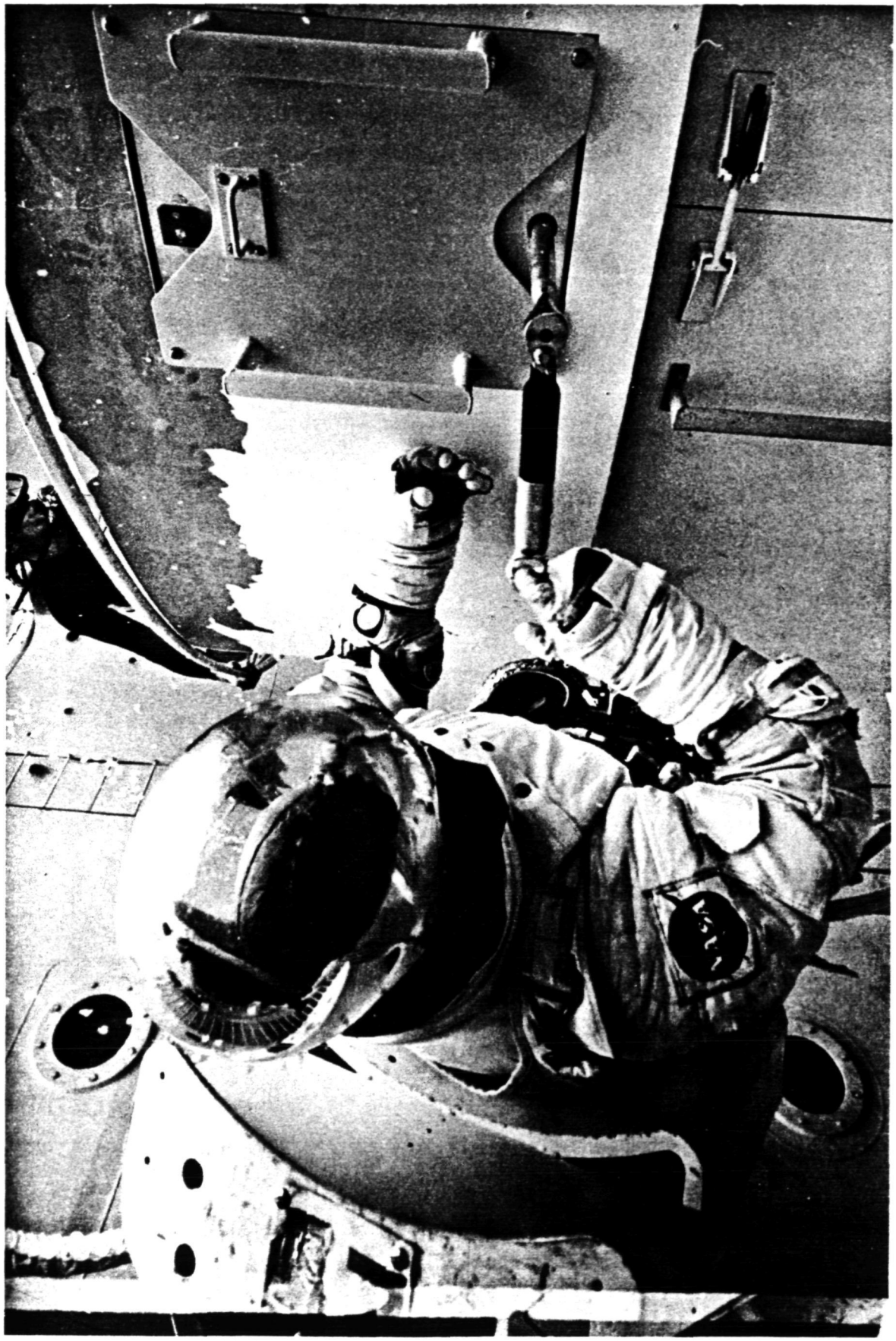

Figure 14. Radial SI portable handhold plate.

ORIGINAL PAGE
BLACK AND WHITE PHOTOGRAPH

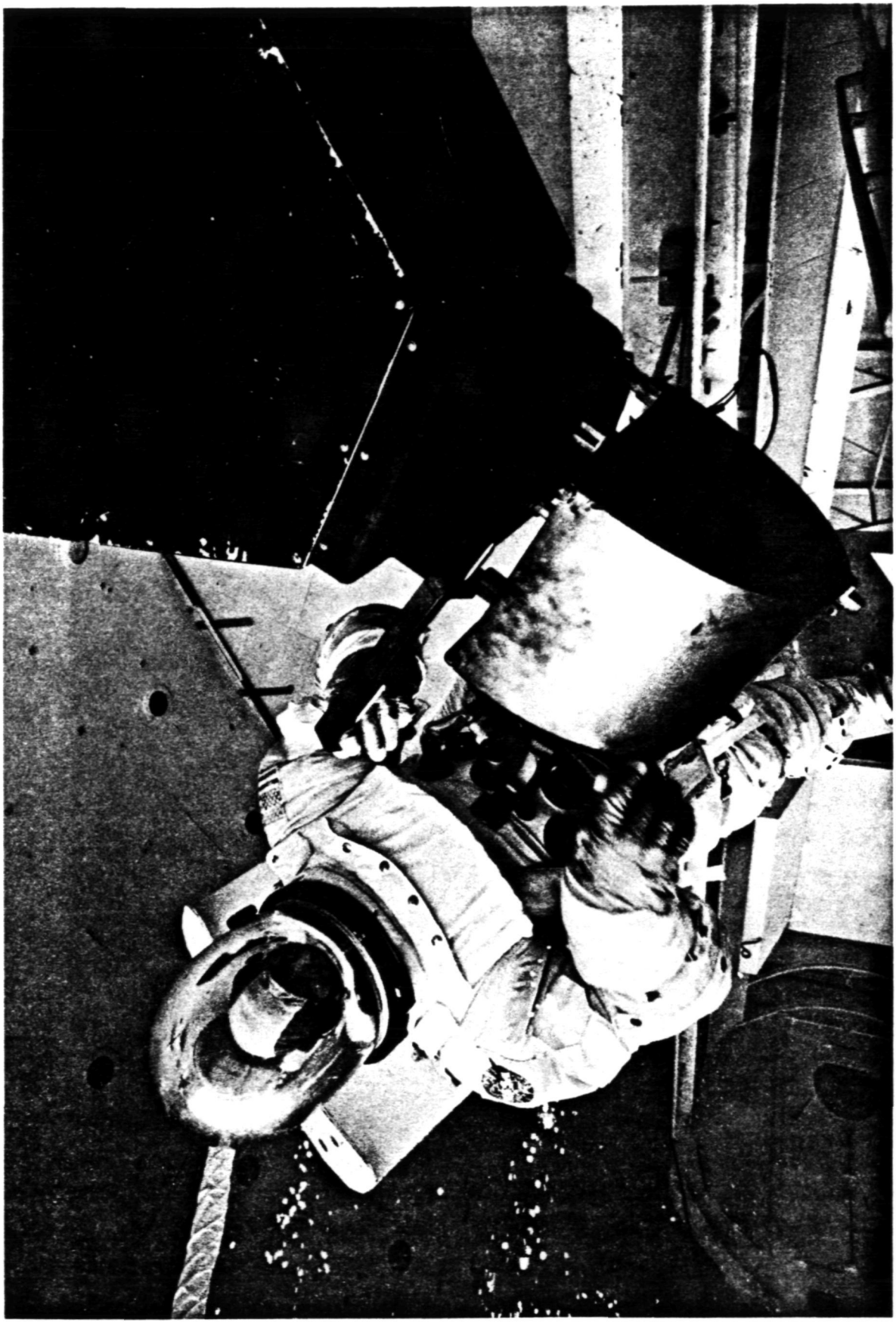

Figure 15. Mirror cover installation using high fidelity mockups.

ORIGINAL PAGE
BLACK AND WHITE PHOTOGRAPH

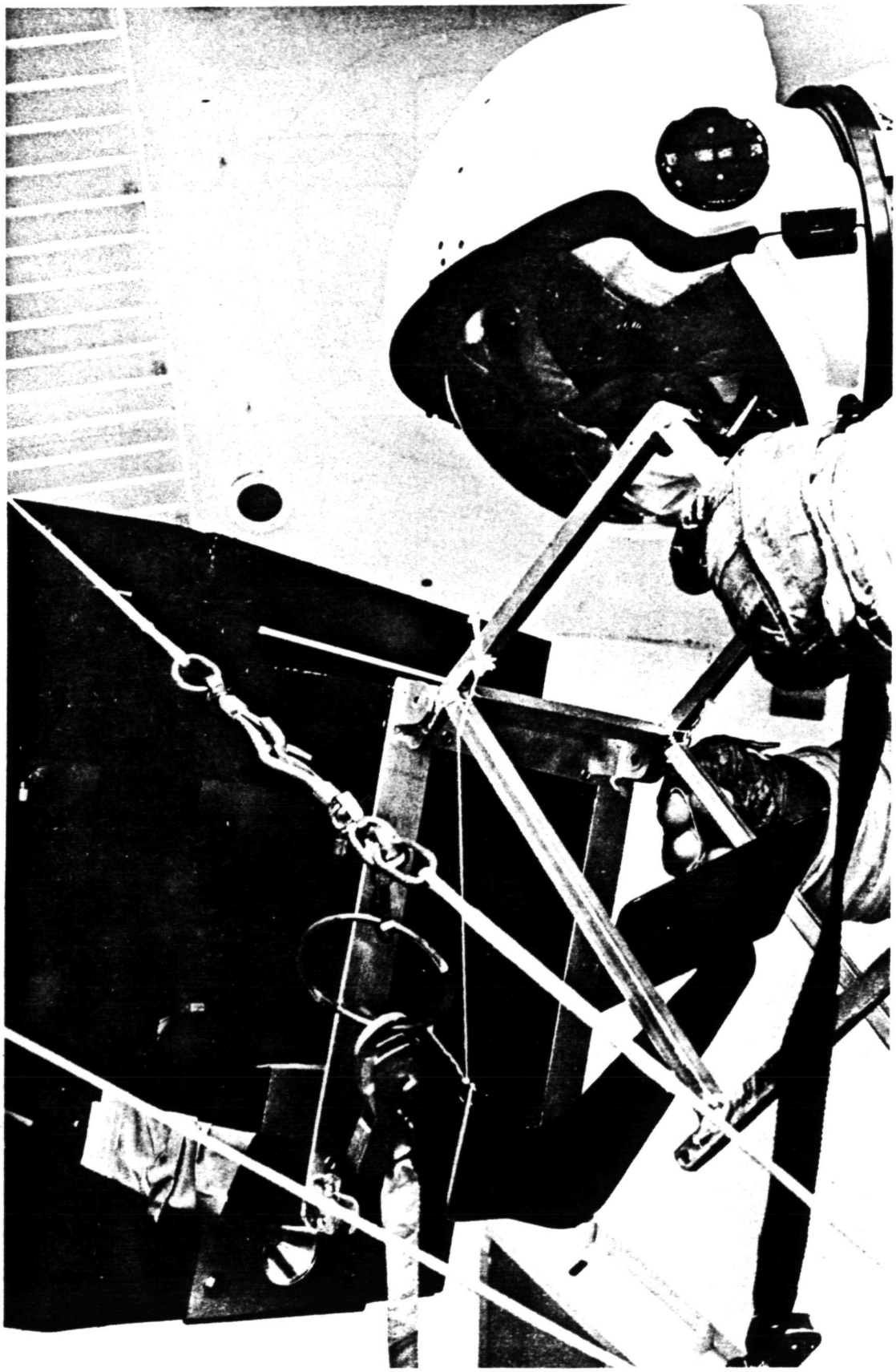

Figure 15. Early mirror cover installation test.

ORIGINAL PAGE IS
OF POOR QUALITY

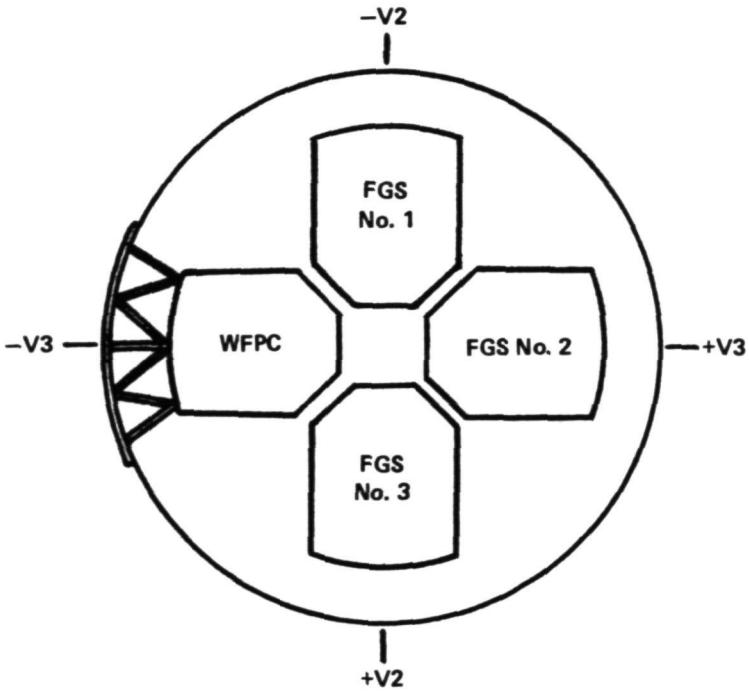


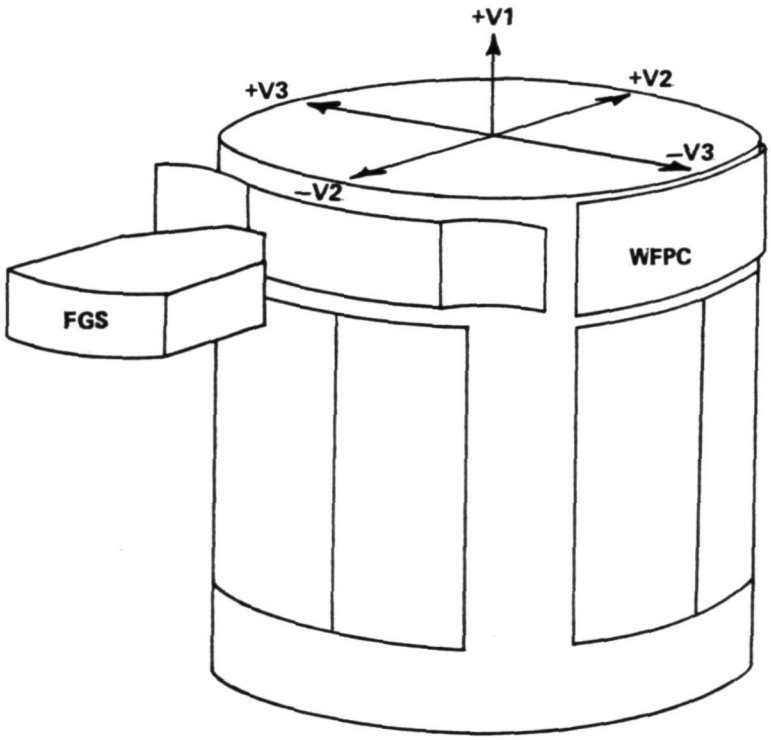


Figure 16. FGS orientation in AS.

ORIGINAL PAGE
BLACK AND WHITE PHOTOGRAPH

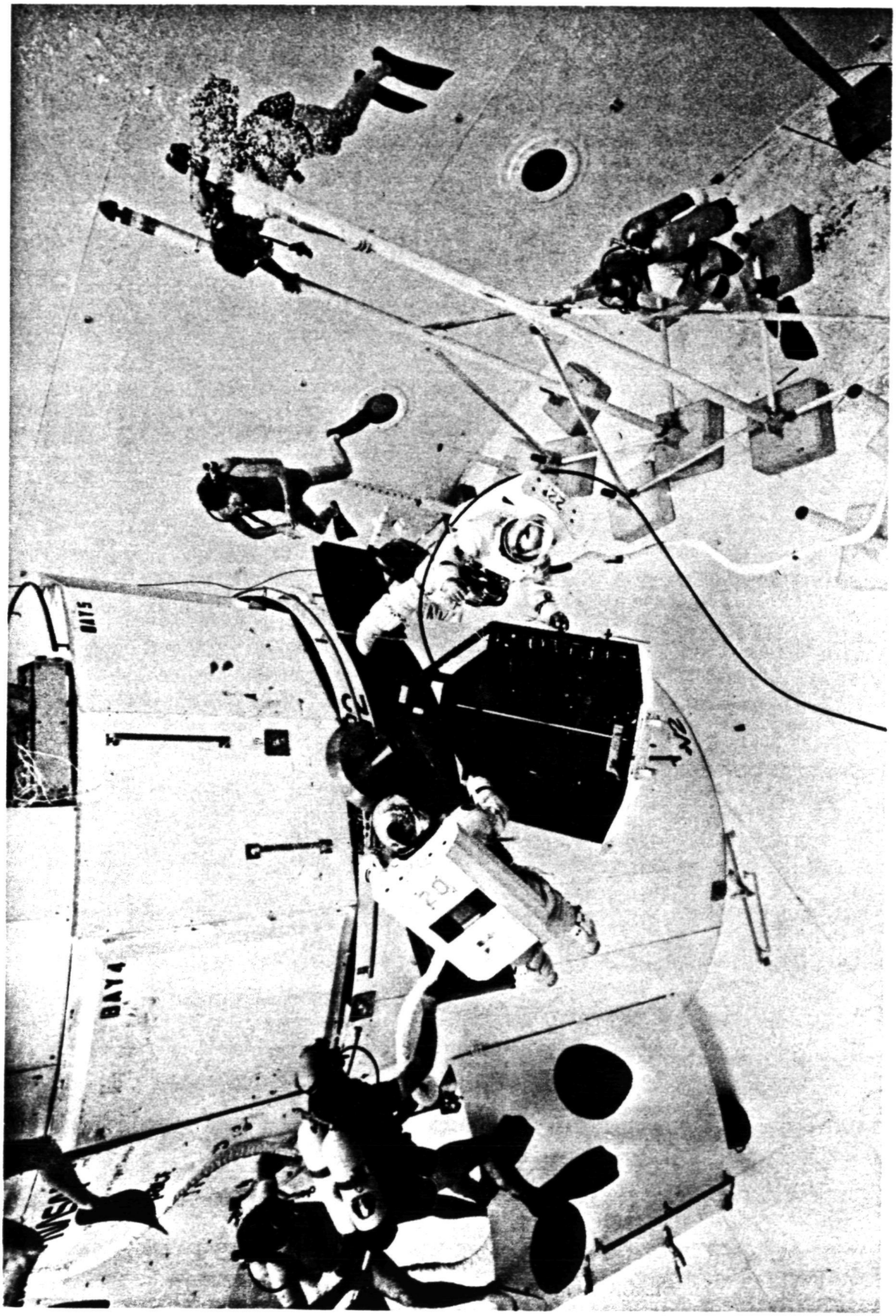


Figure 17. Fine guidance sensor changeout.

Figure 17. (Continued)



ORIGINAL PAGE
BLACK AND WHITE PHOTOGRAPH

ORIGINAL PAGE
BLACK AND WHITE PHOTOGRAPH

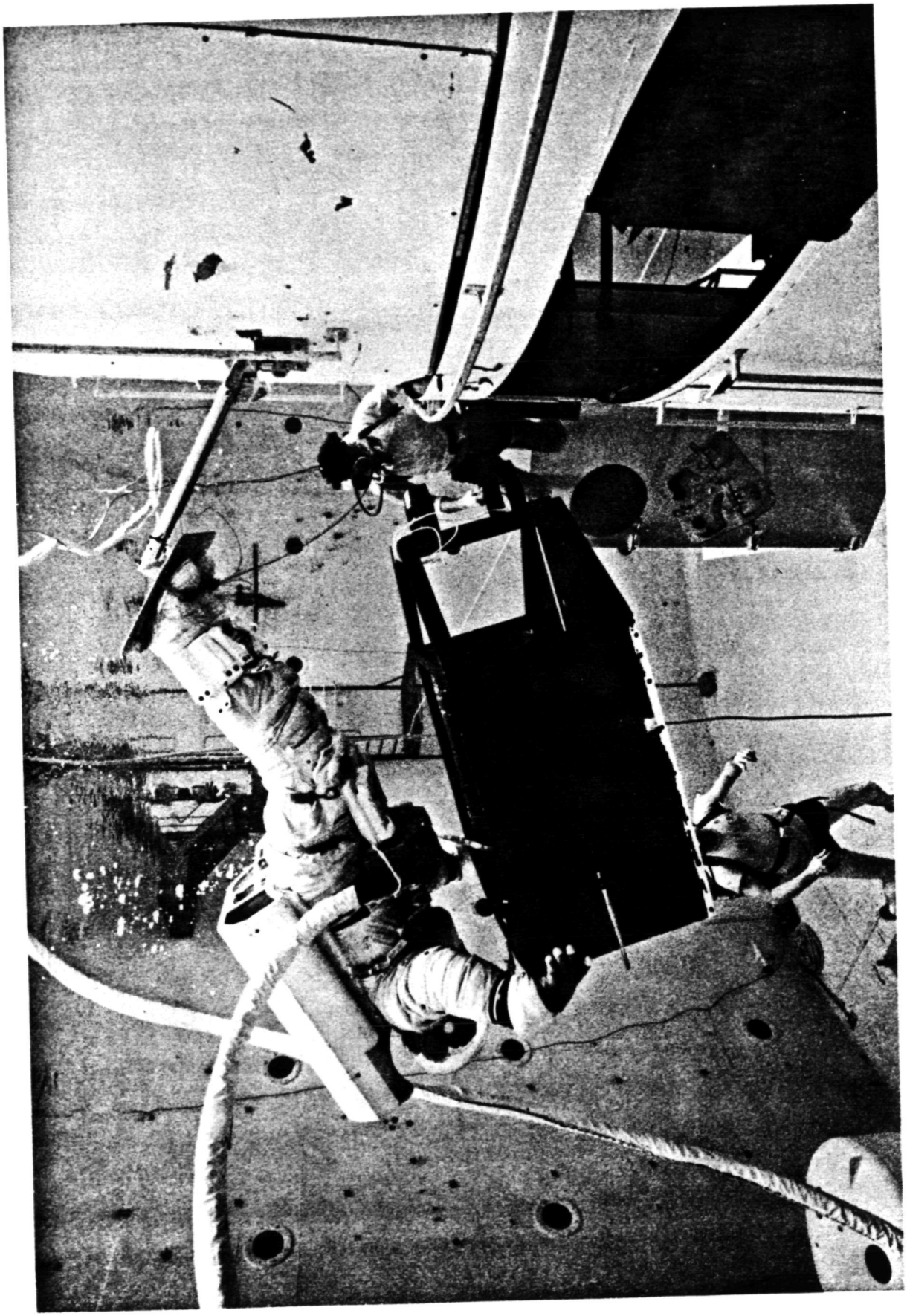

Figure 17. (Concluded)

ORIGINAL PAGE
BLACK AND WHITE PHOTOGRAPH

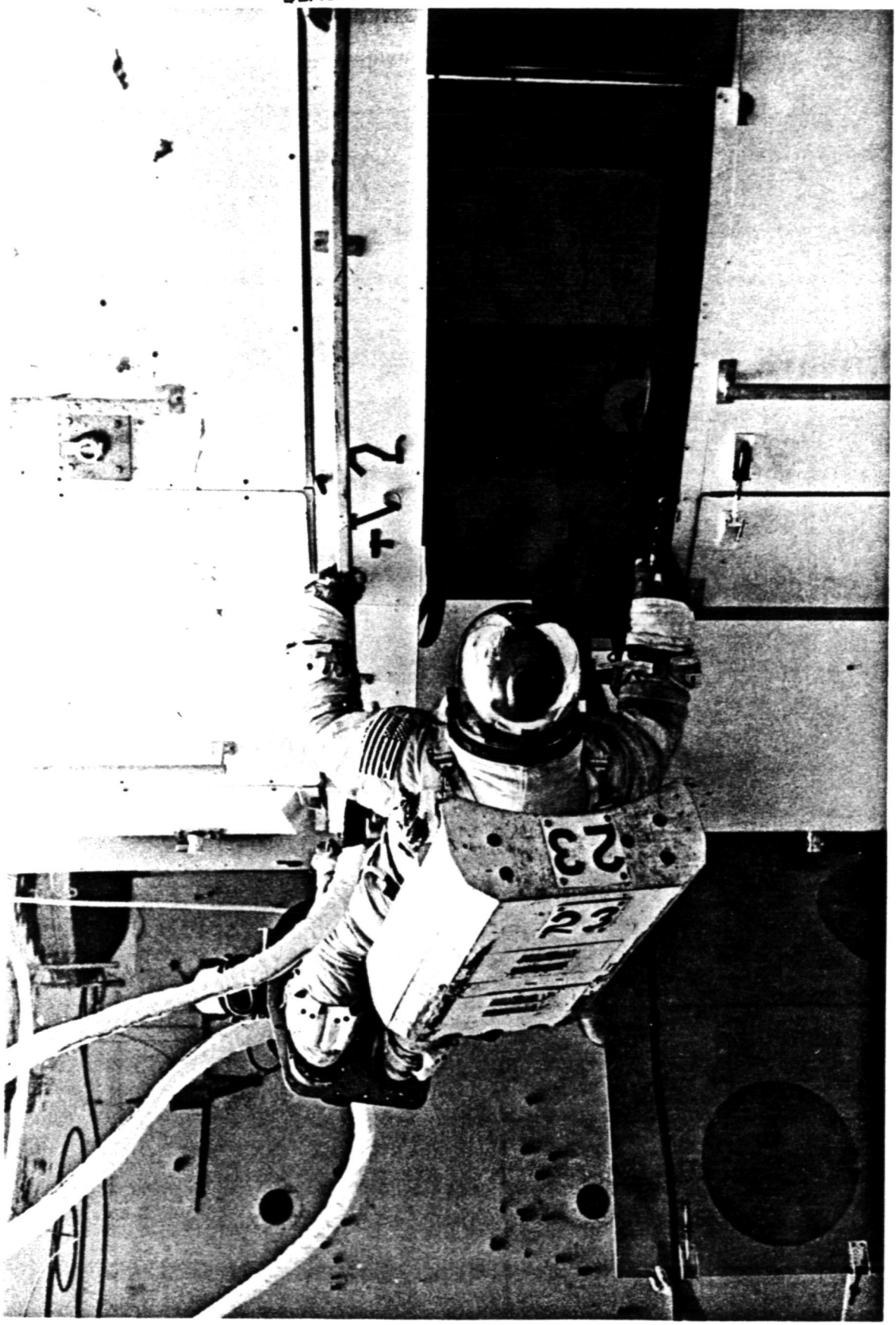


Figure 18. Crewman operating FGS fastener.

ORIGINAL PAGE
BLACK AND WHITE PHOTOGRAPH

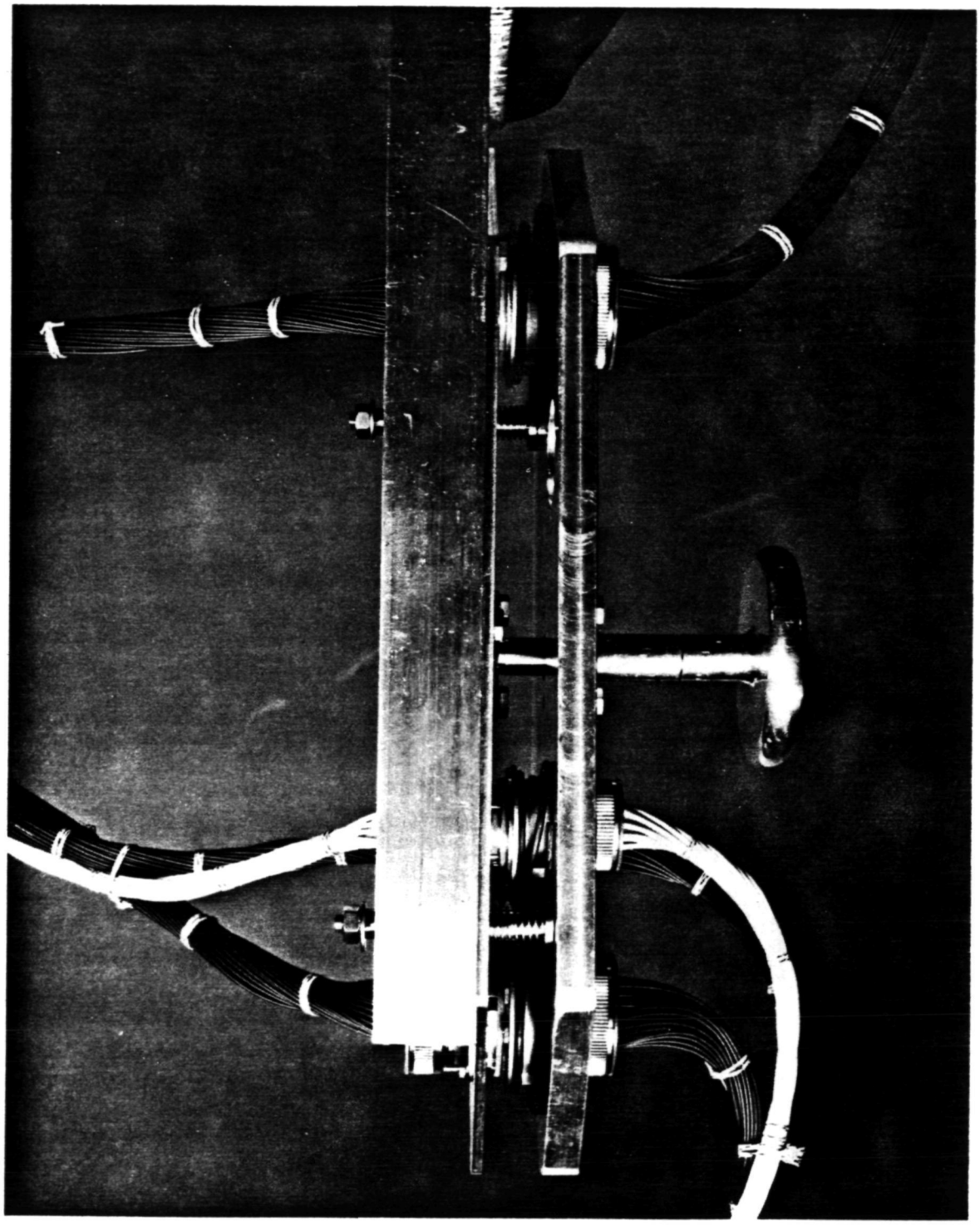

Figure 19. One concept of the FGS ganged electrical connector.

ORIGINAL PAGE
BLACK AND WHITE PHOTOGRAPH

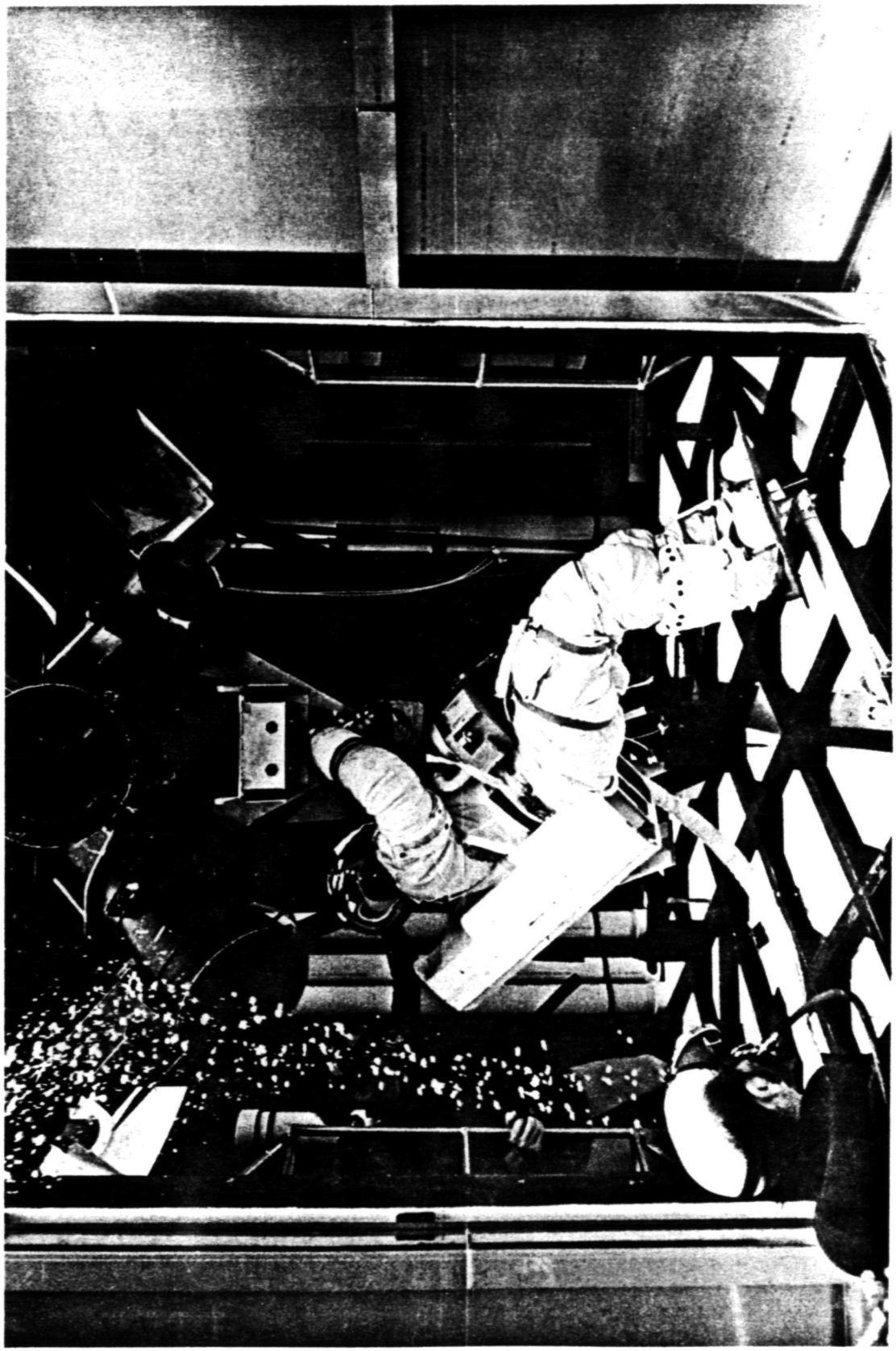

Figure 20. FHST mockup.

ORIGINAL PAGE
BLACK AND WHITE PHOTOGRAPH

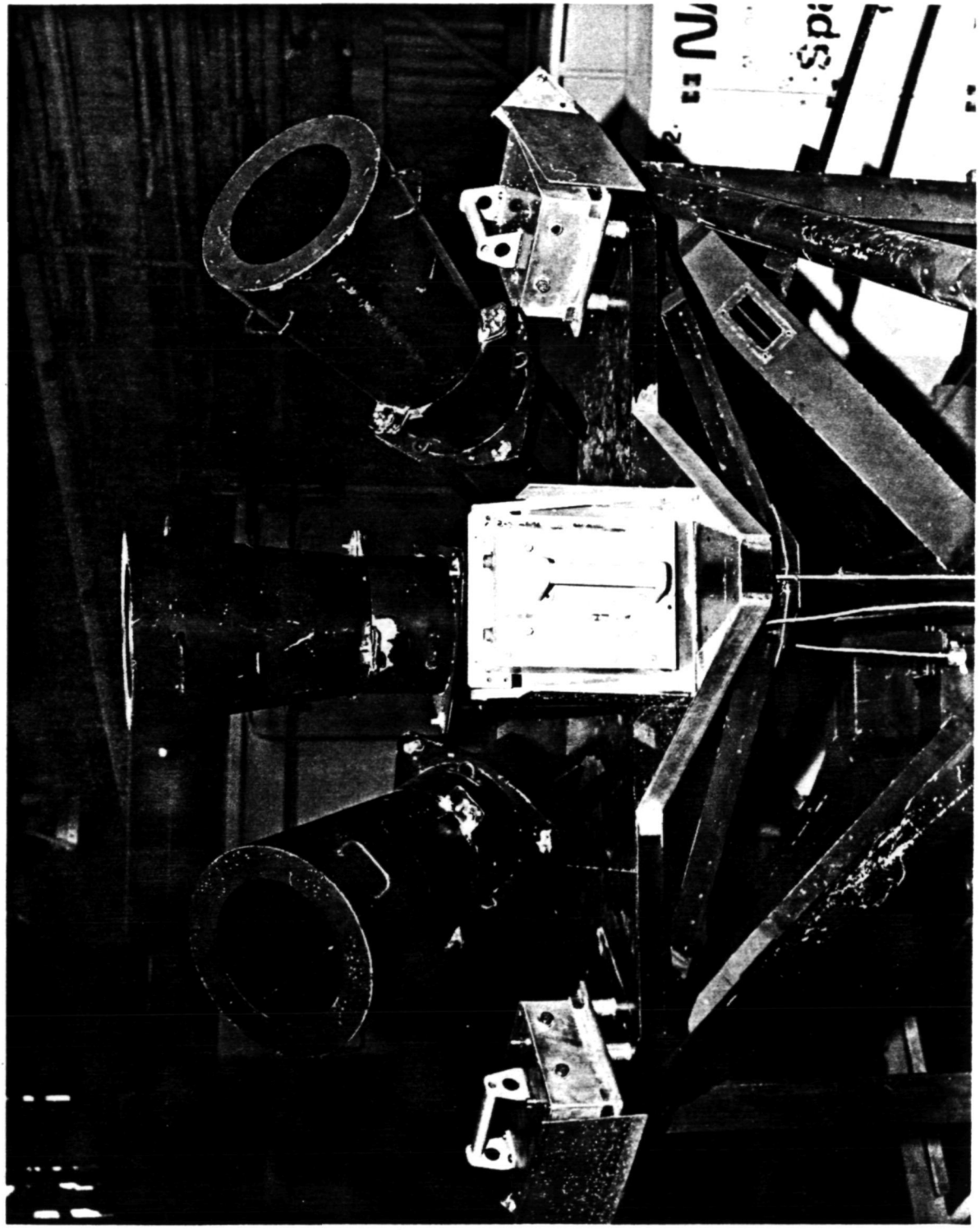

Figure 20. FHST mockup (looking from bottom up).

Figure 21. Crewman operating lightshield J-hooks.



ORIGINAL PAGE
BLACK AND WHITE PHOTOGRAPH

ORIGINAL PAGE
BLACK AND WHITE PHOTOGRAPH

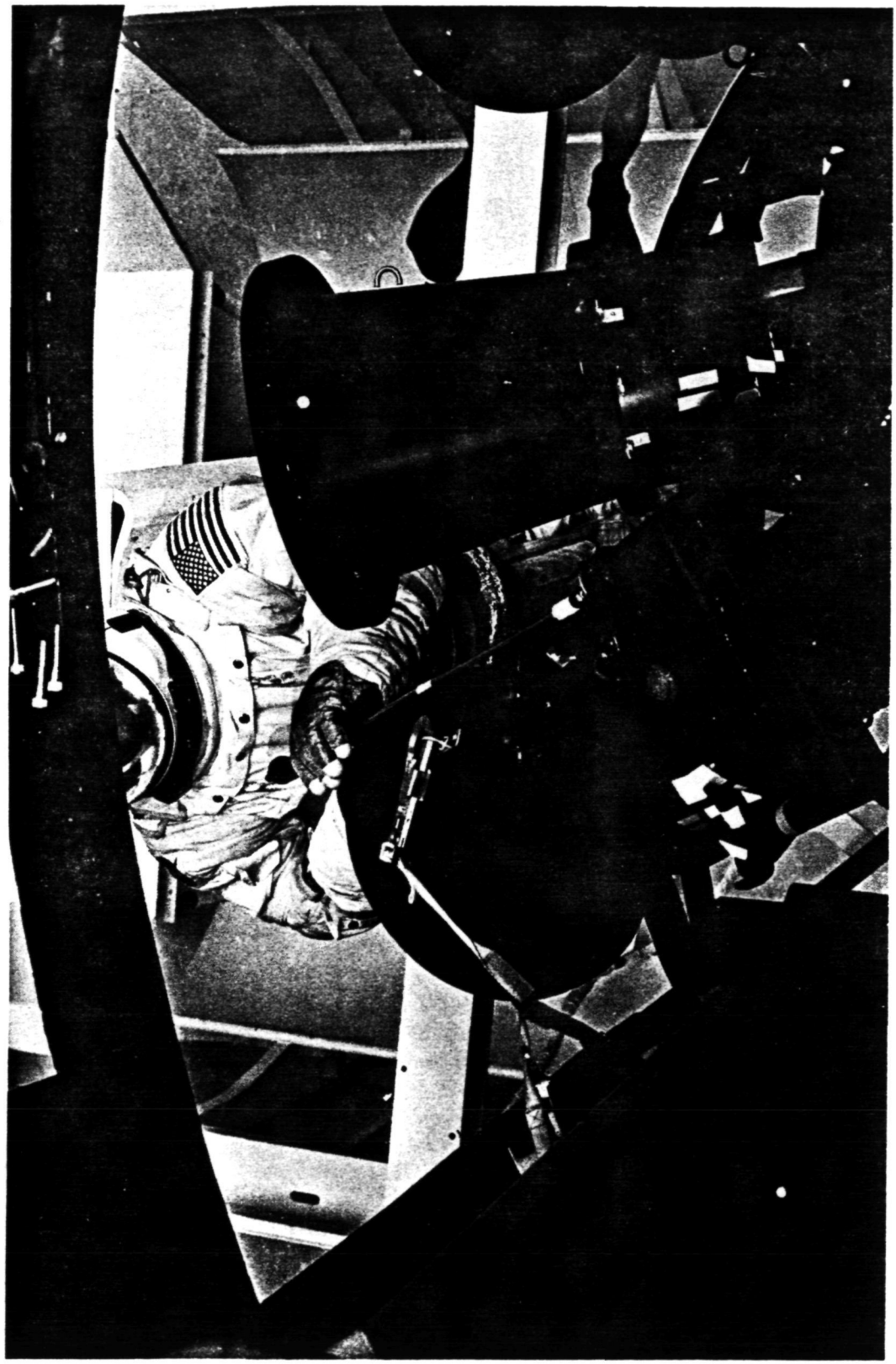

Figure 21. (Concluded)

ORIGINAL PAGE IS
OF POOR QUALITY

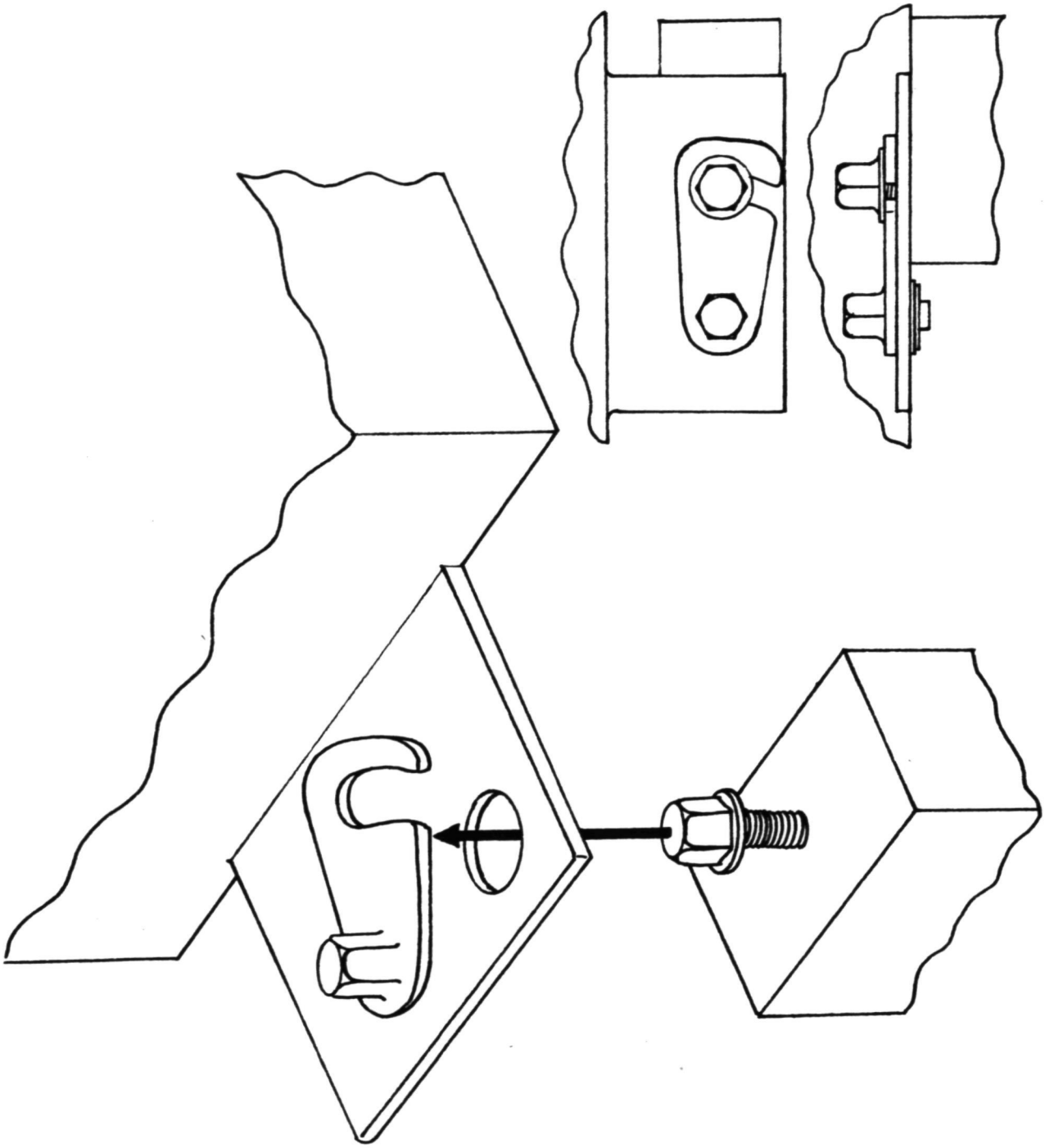

Figure 22. J-hook latch.

ORIGINAL PAGE IS
OF POOR QUALITY

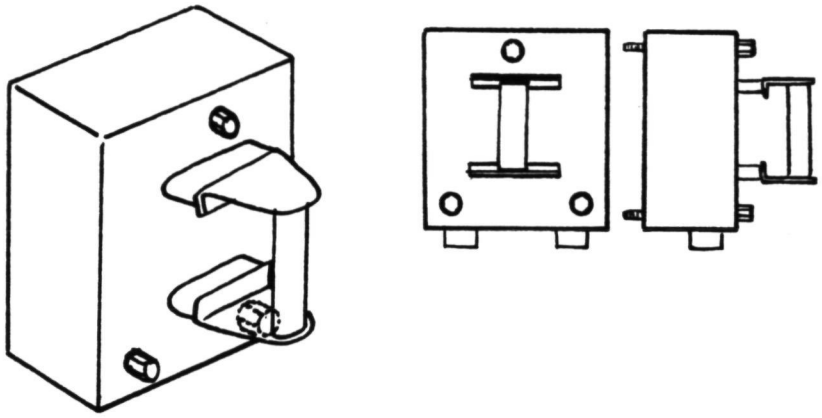

Figure 23. RSU mounting bolt locations.

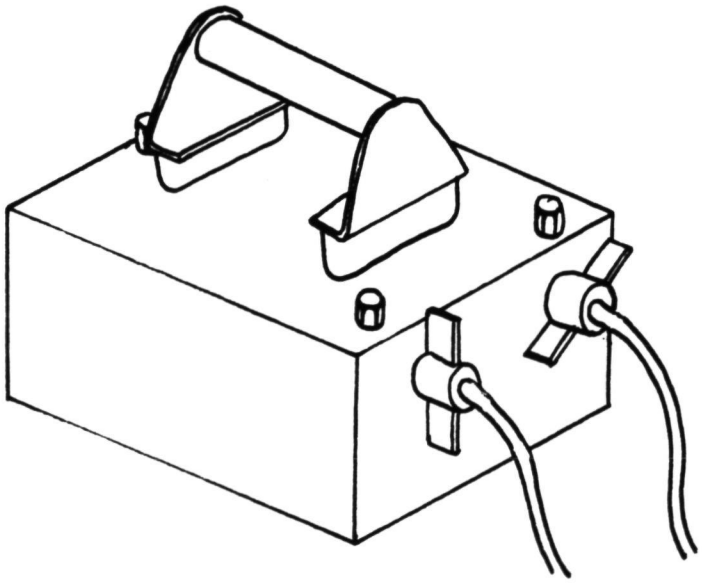

Figure 24. RSU electrical wing tab connectors.

A. INITIALLY THE PLACEMENT OF RSU'S MADE THEM INACCESSIBLE; THEY COULD NOT BE REPLACED ON ORBIT, AS DEMONSTRATED BY UNDERWATER SIMULATIONS

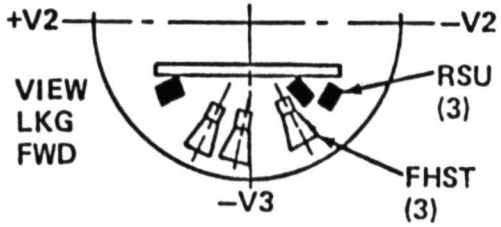


B. LMSC PROPOSED SEVERAL ALTERNATIVES. THE MOST OBVIOUSLY WORKABLE SOLUTION WAS ALSO THE MOST EXPENSIVE TO IMPLEMENT

C. BECAUSE OF THE HIGH COST OF THE PREFERRED APPROACH WE AGREED TO TRY ANOTHER LESS ATTRACTIVE SUGGESTION WHICH COULD BE IMPLEMENTED WITH NO COST IMPACT

WE FOUND THE LESSER APPROACH WORKABLE (THOUGH NOT OPTIMUM) AND AGREED TO ACCEPT

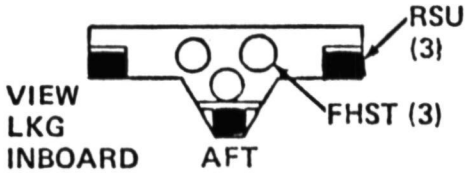


WITHOUT THE OPPORTUNITY TO TEST, WE WOULD HAVE HAD TO RECOMMEND THE APPROACH WHICH ELIMINATED ALL QUESTION – THE MOST EXPENSIVE

Figure 25. Rate sensor unit removal/replacement concepts.

ORIGINAL PAGE
BLACK AND WHITE PHOTOGRAPH

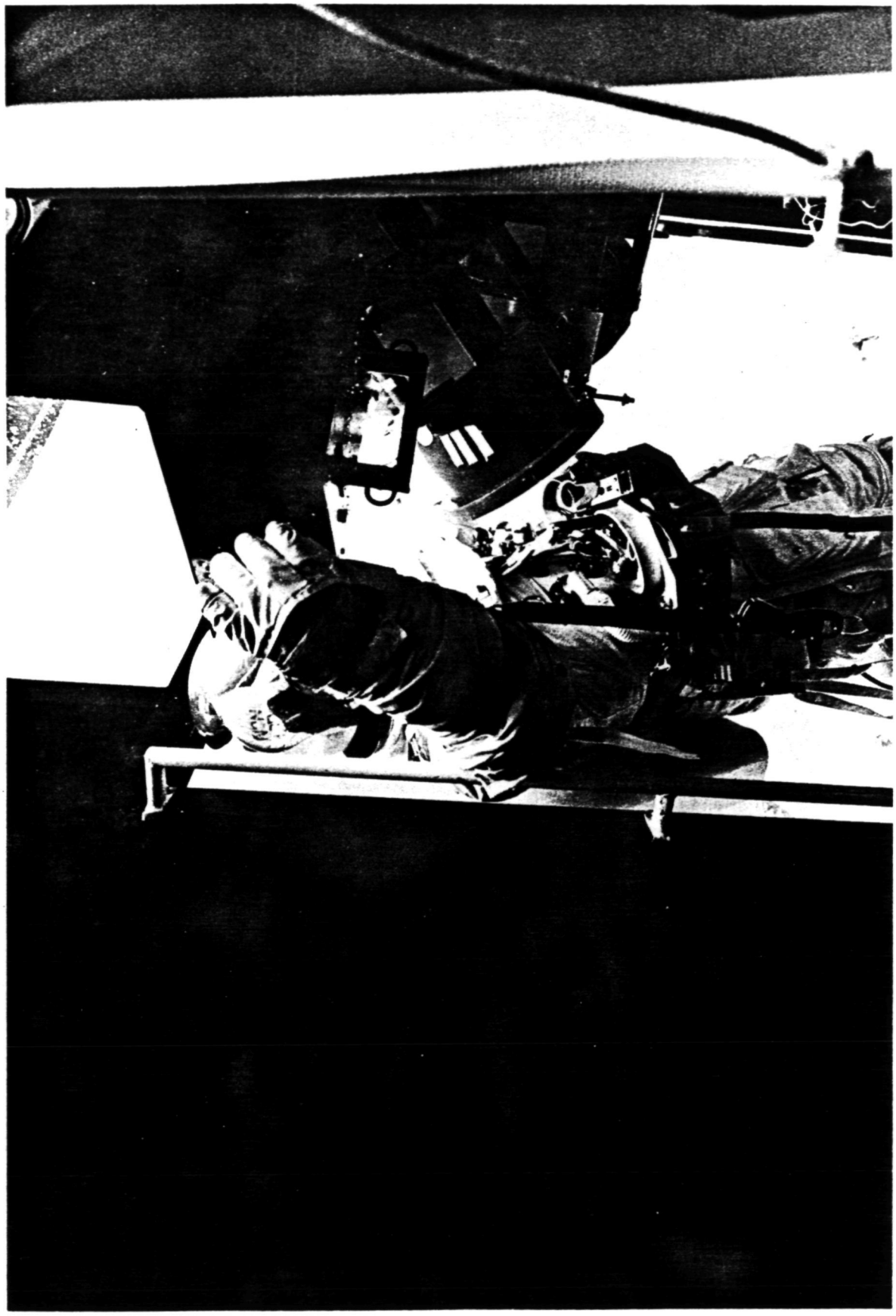

Figure 26. Rejection of initial RSU location concept.

ORIGINAL PAGE
BLACK AND WHITE PHOTOGRAPH

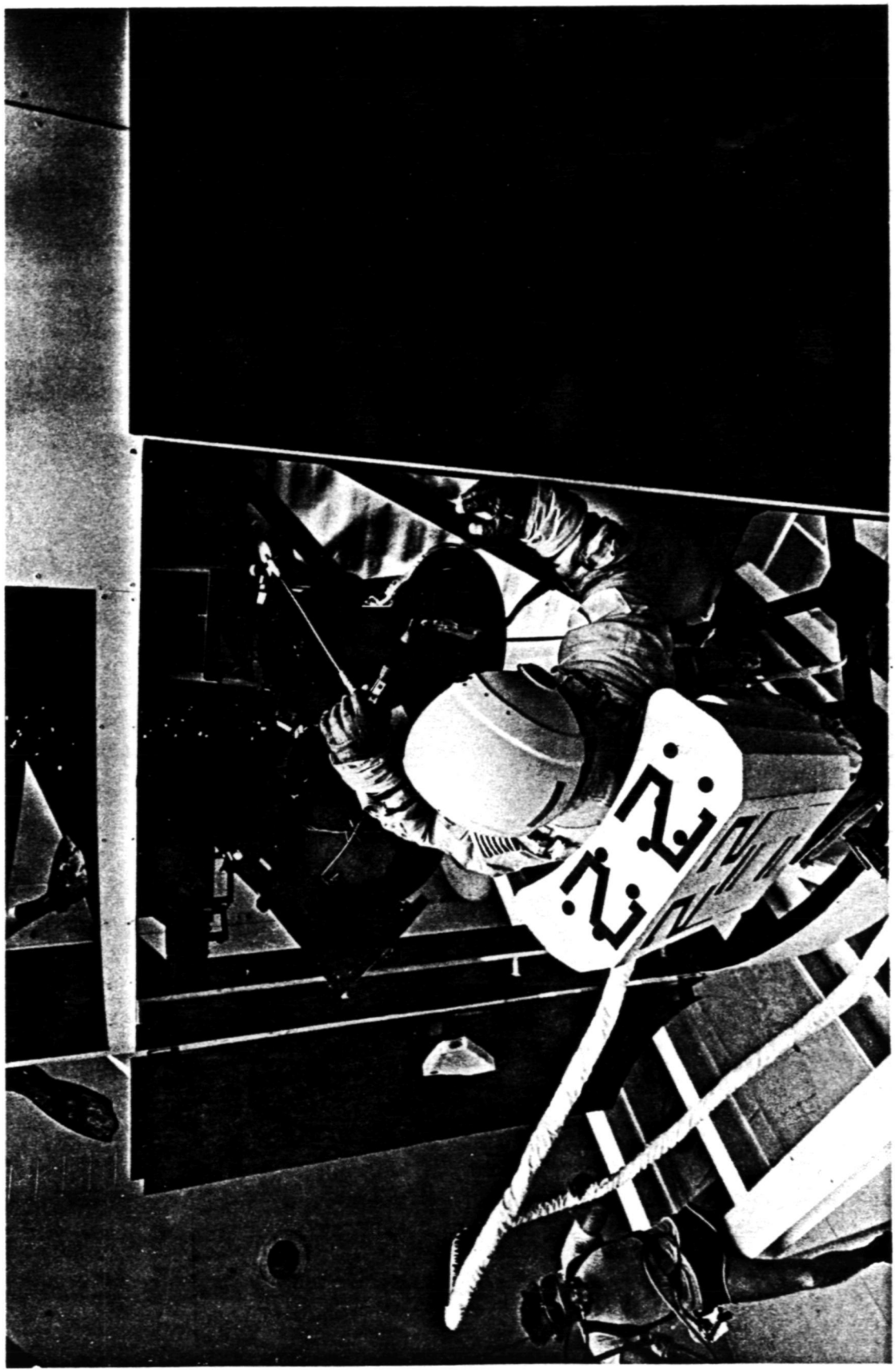

Figure 26. (Continued)

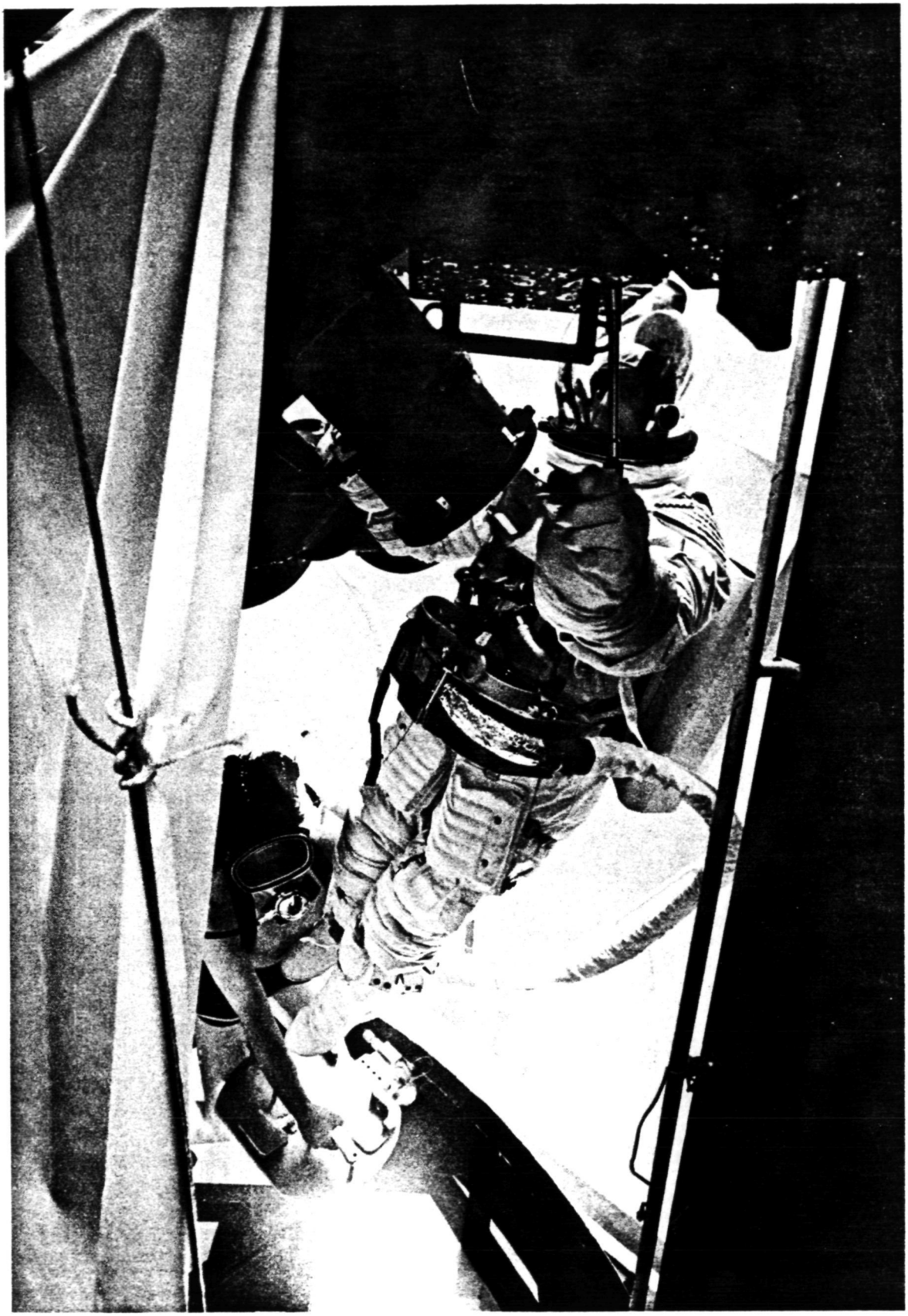

Figure 26. (Continued)



ORIGINAL PAGE
BLACK AND WHITE PHOTOGRAPH

ORIGINAL PAGE
BLACK AND WHITE PHOTOGRAPH

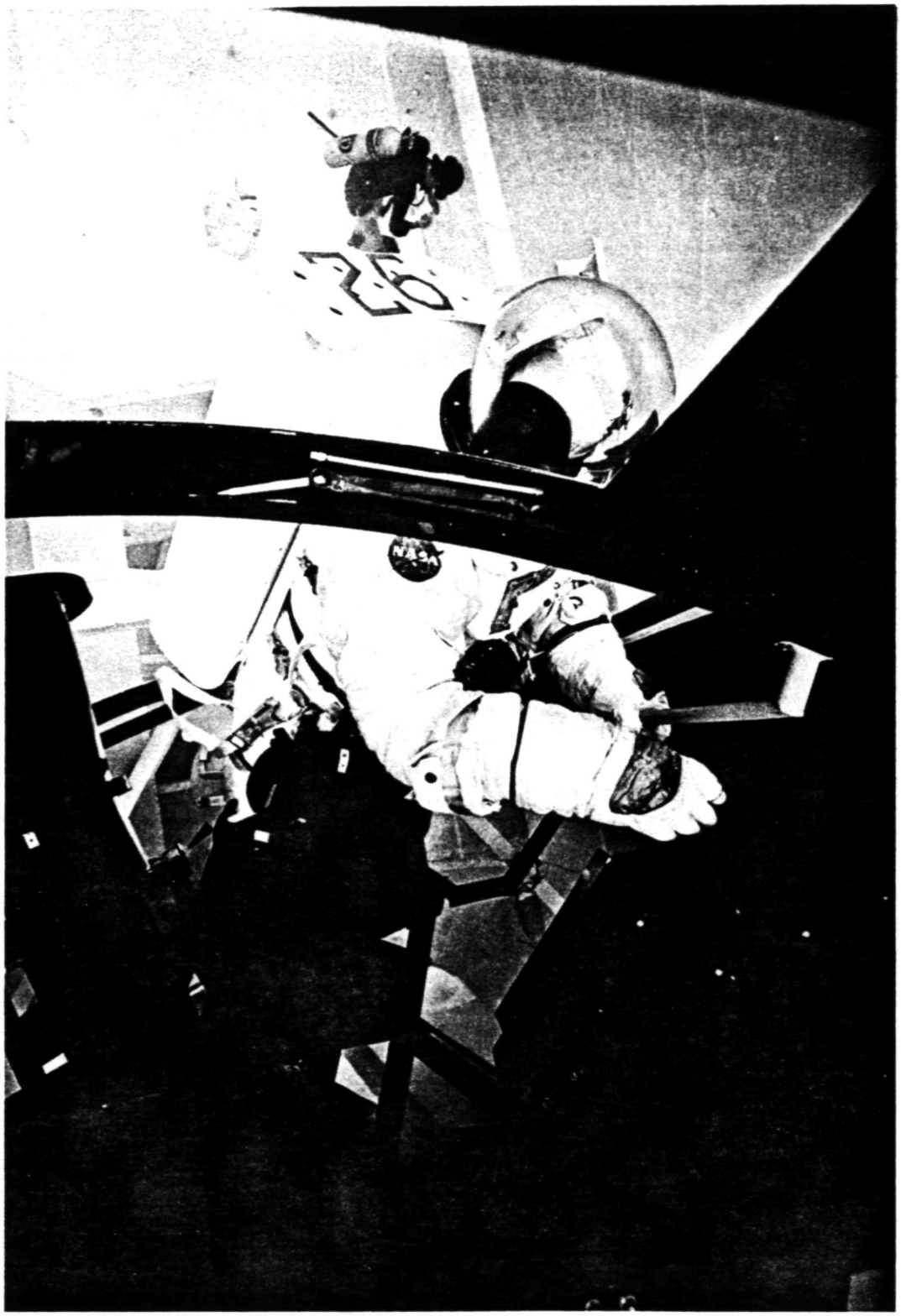


Figure 26. (Concluded)

ORIGINAL PAGE IS
OF POOR QUALITY

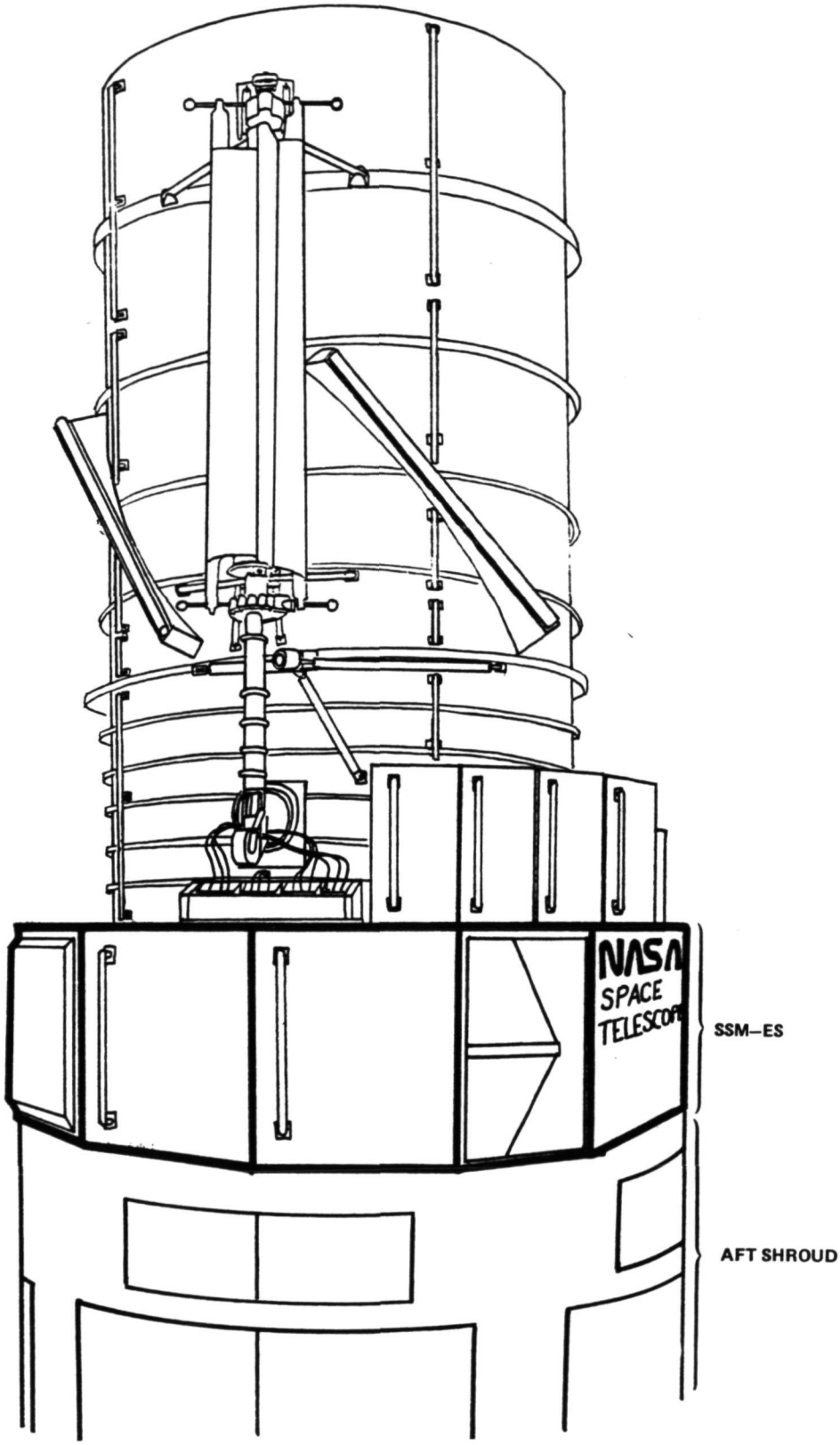

ORIGINAL PAGE
BLACK AND WHITE PHOTOGRAPH

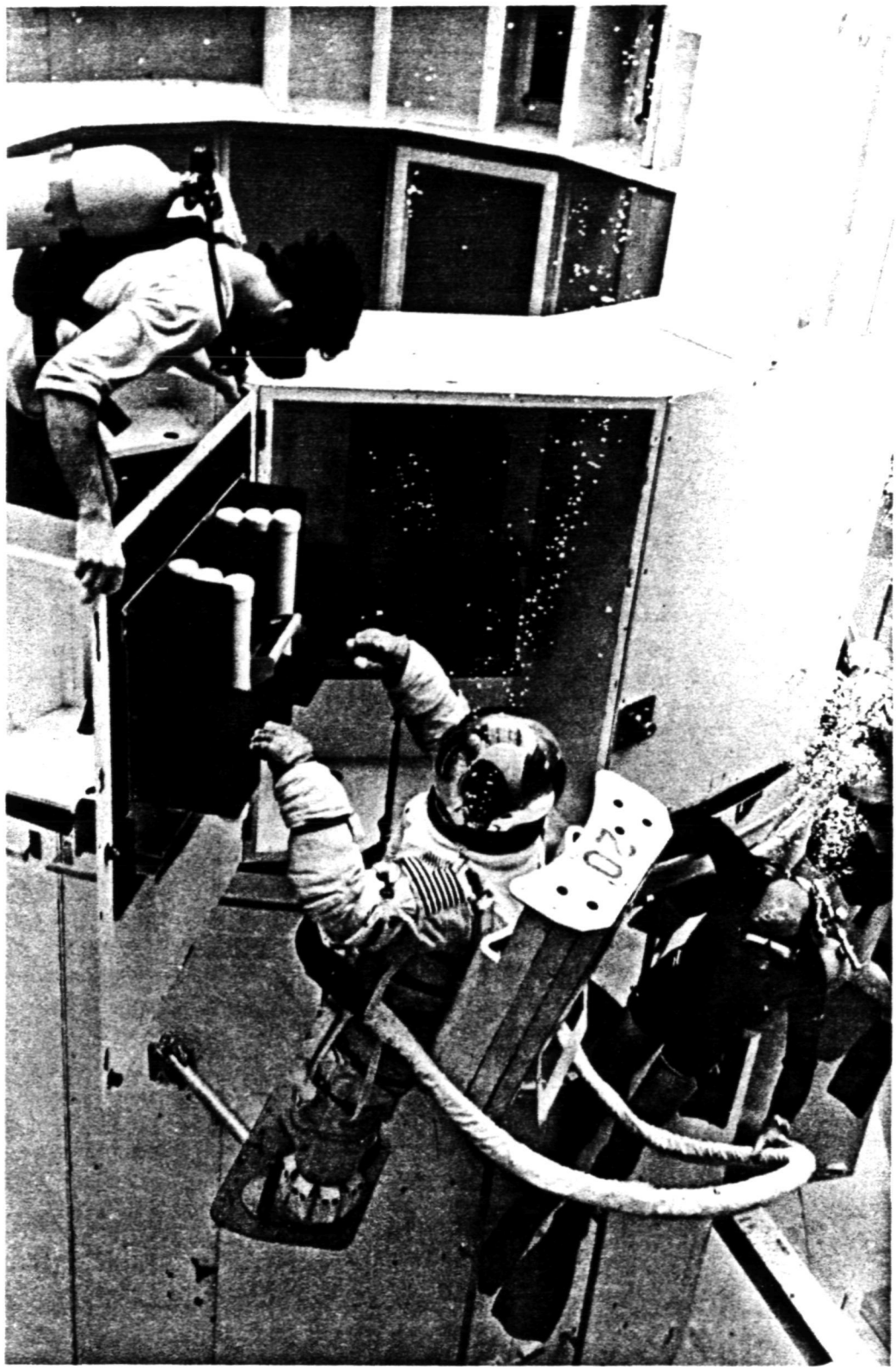


Figure 28. Bay 10 SI C&DH and RGE placement.

ORIGINAL PAGE
BLACK AND WHITE PHOTOGRAPH

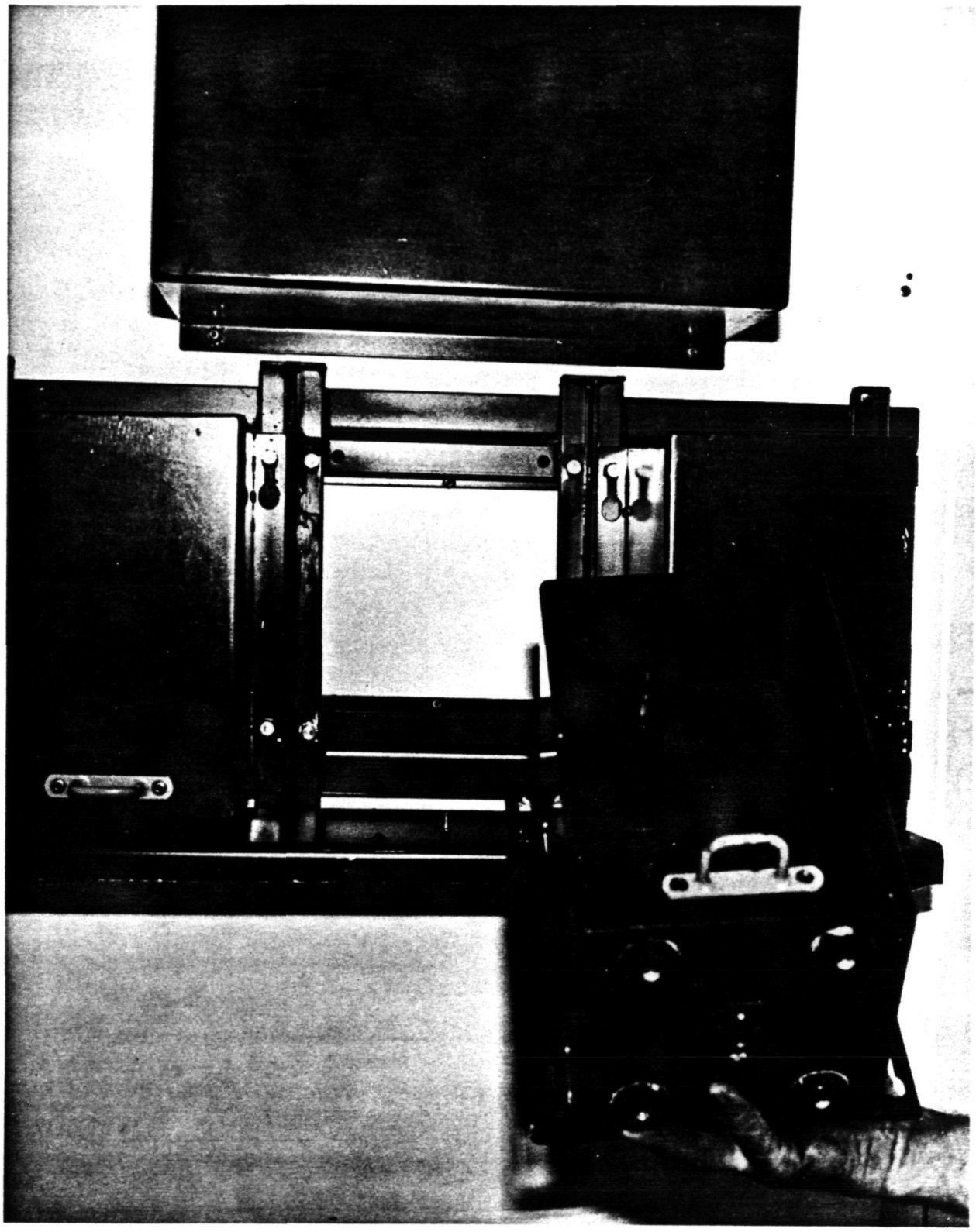

Figure 28. RGE installation (inside Bay 10).

ORIGINAL PAGE
BLACK AND WHITE PHOTOGRAPH

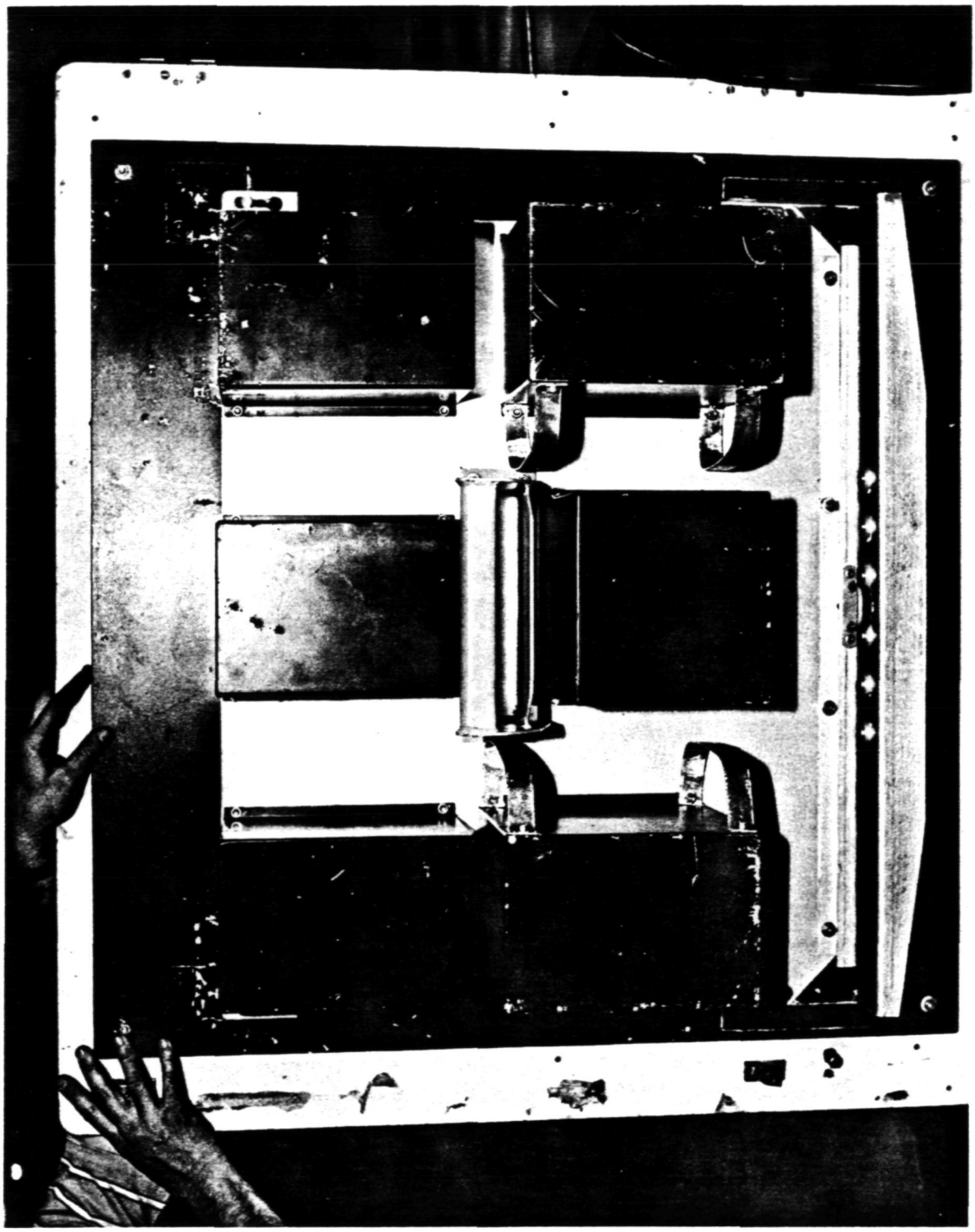

Figure 28. SI C&DH.

ORIGINAL PAGE IS
OF POOR QUALITY

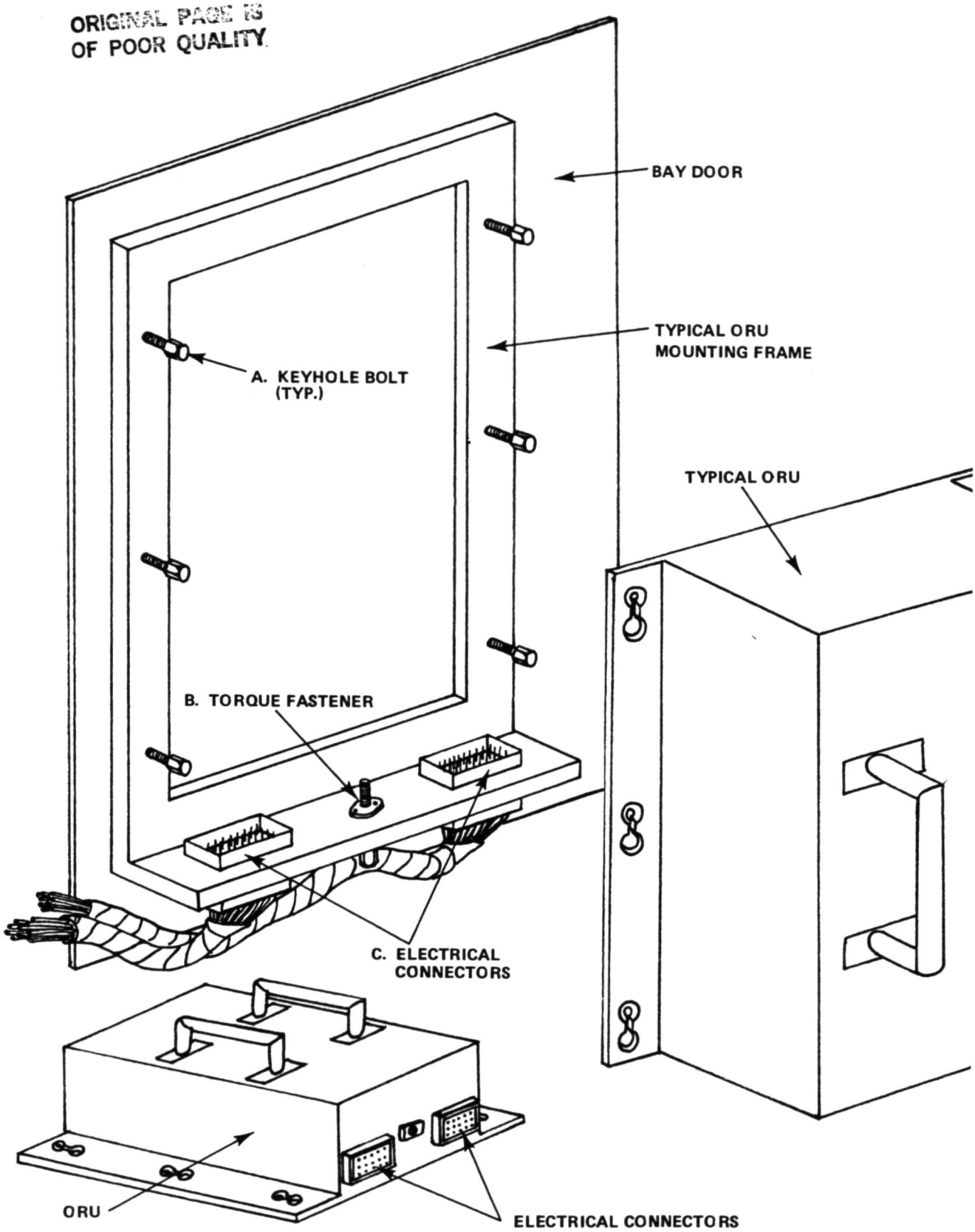


Figure 29. Typical ORU (e.g., SI C&DH) door mounting system.

ORIGINAL PAGE IS
OF POOR QUALITY

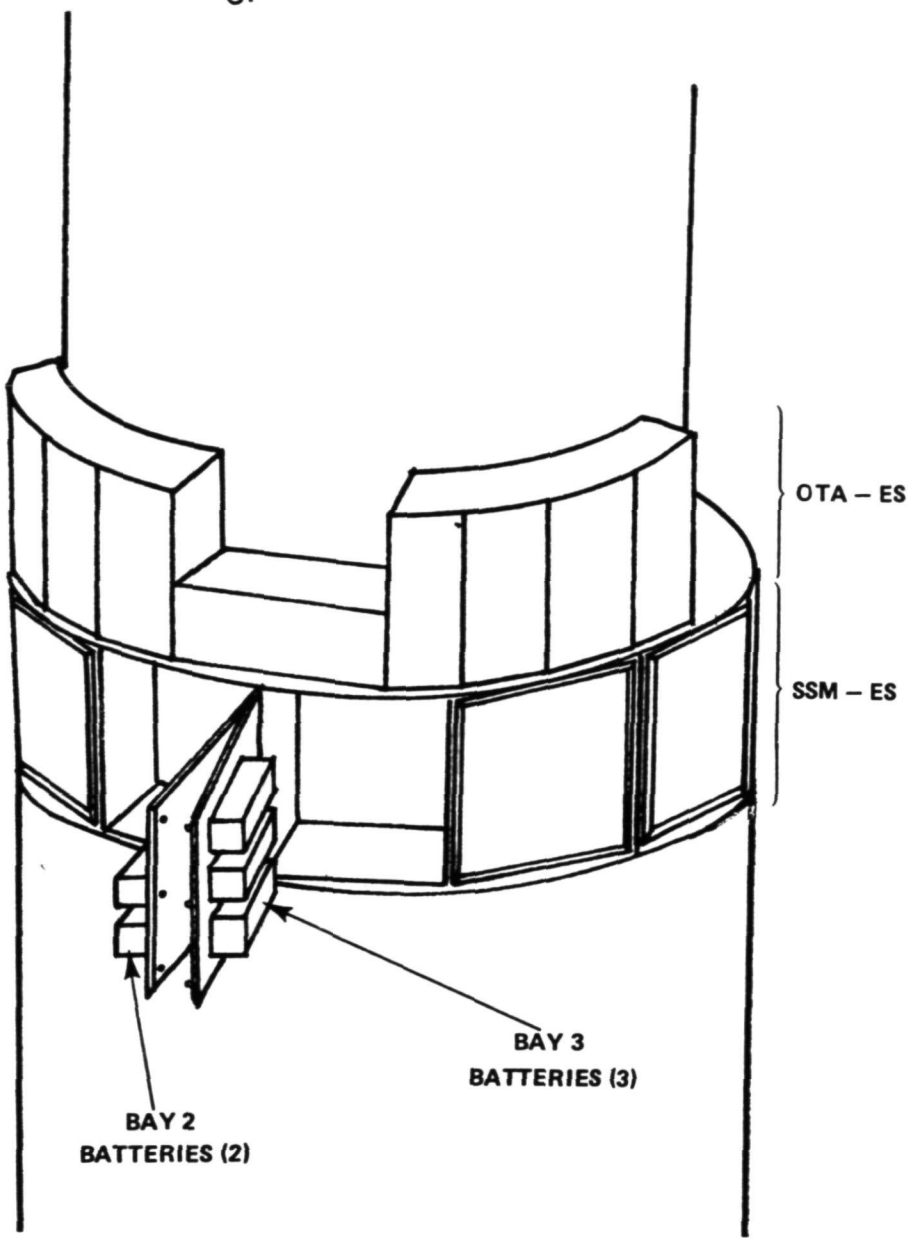


Figure 30. Bay 2 and 3 doors and battery placement.

ORIGINAL PAGE
BLACK AND WHITE PHOTOGRAPH

Figure 31. Low fidelity battery mockups.

Figure 32. OTA-ES bay accessibility.



ORIGINAL PAGE
BLACK AND WHITE PHOTOGRAPH

Figure 33. FGE accessibility test.

ORIGINAL PAGE
BLACK AND WHITE PHOTOGRAPH

Figure 33. FGE stowage mechanisms test.



ORIGINAL PAGE
BLACK AND WHITE PHOTOGRAPH

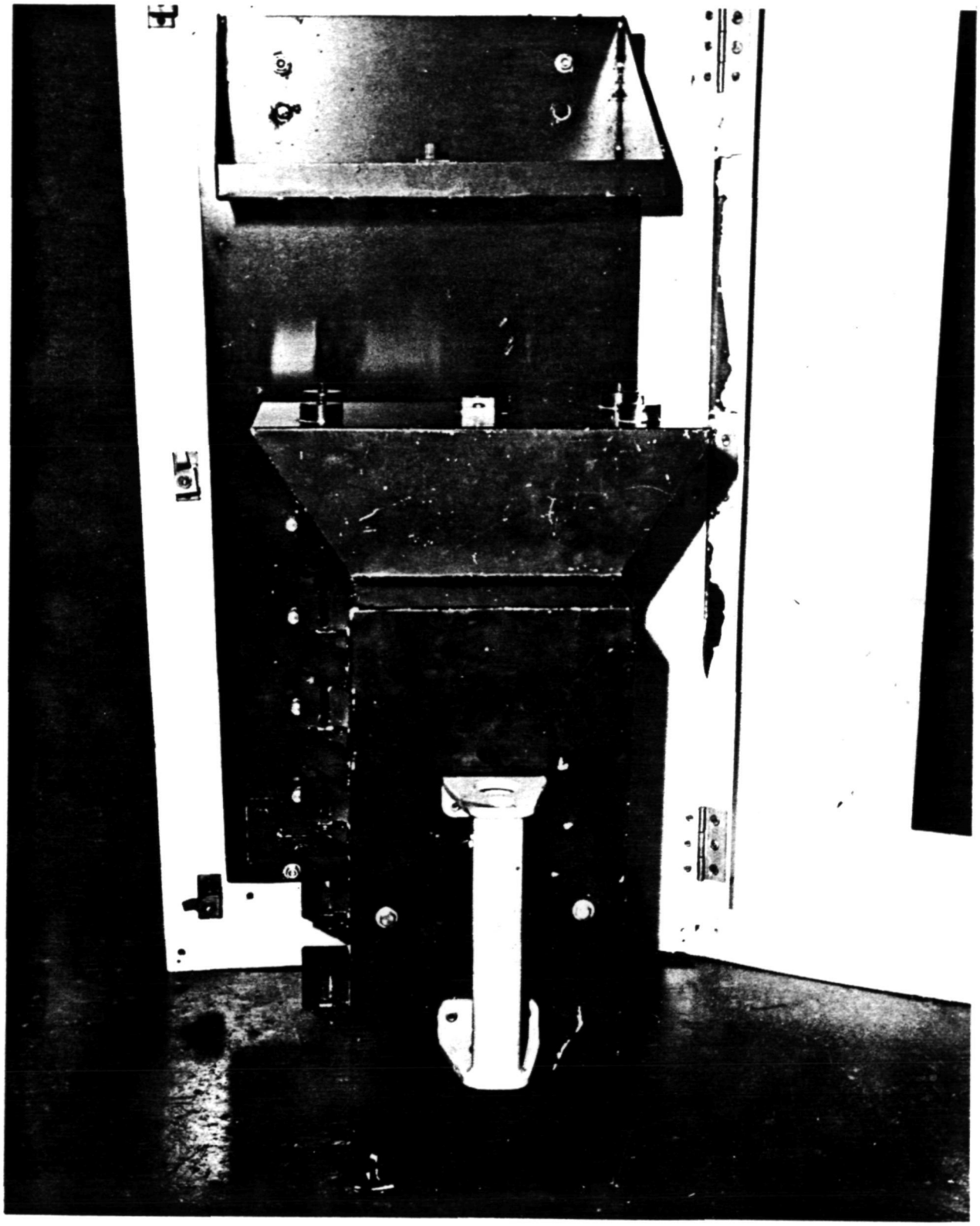

Figure 33. OTA-ES bay door mounted ORU (fine guidance electronics).

ORIGINAL PAGE
BLACK AND WHITE PHOTOGRAPH

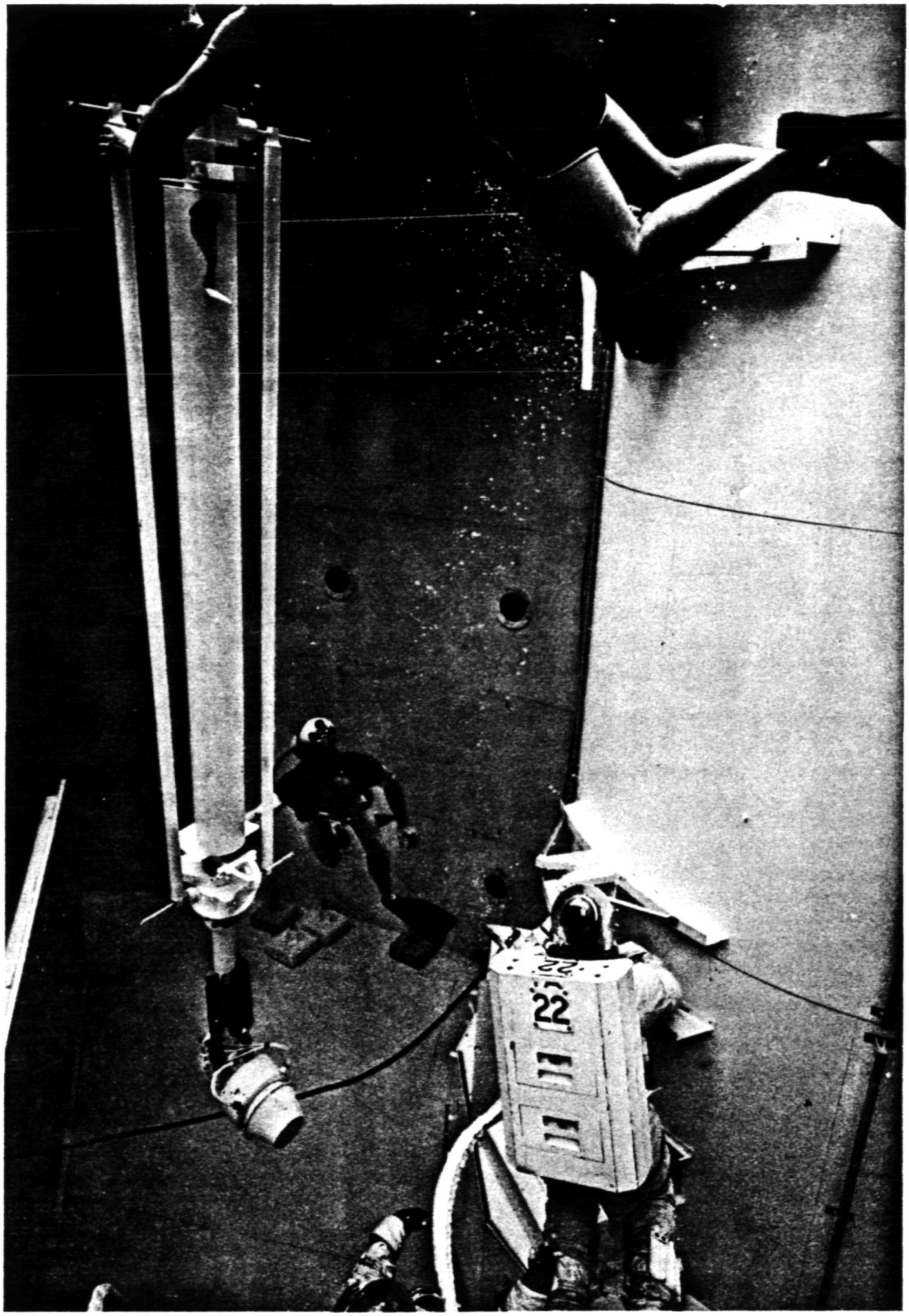


Figure 34. Early solar array jettison simulations (November 1979).



ORIGINAL PAGE
BLACK AND WHITE PHOTOGRAPH

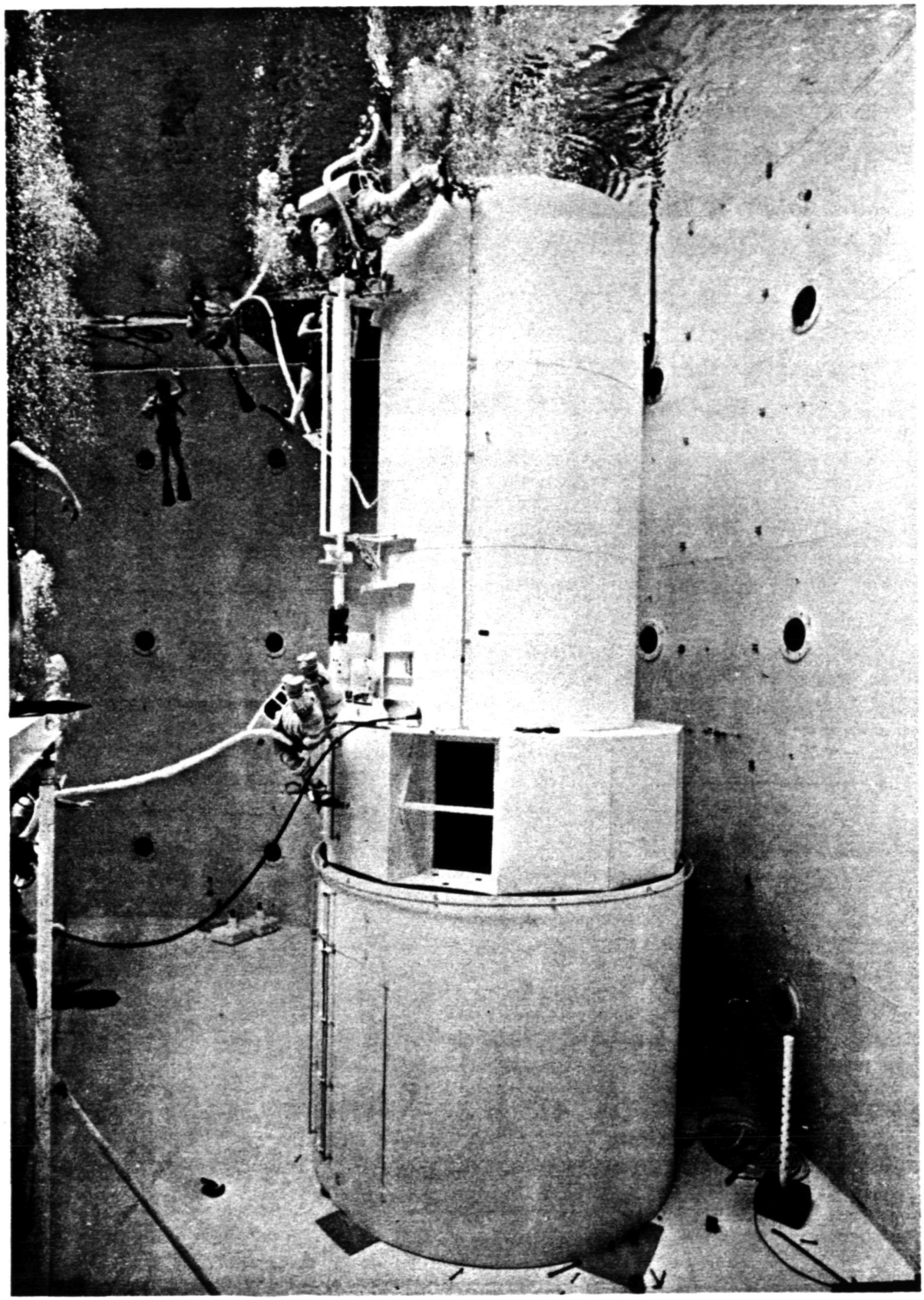

Figure 34. (Continued)

ORIGINAL PAGE
BLACK AND WHITE PHOTOGRAPH

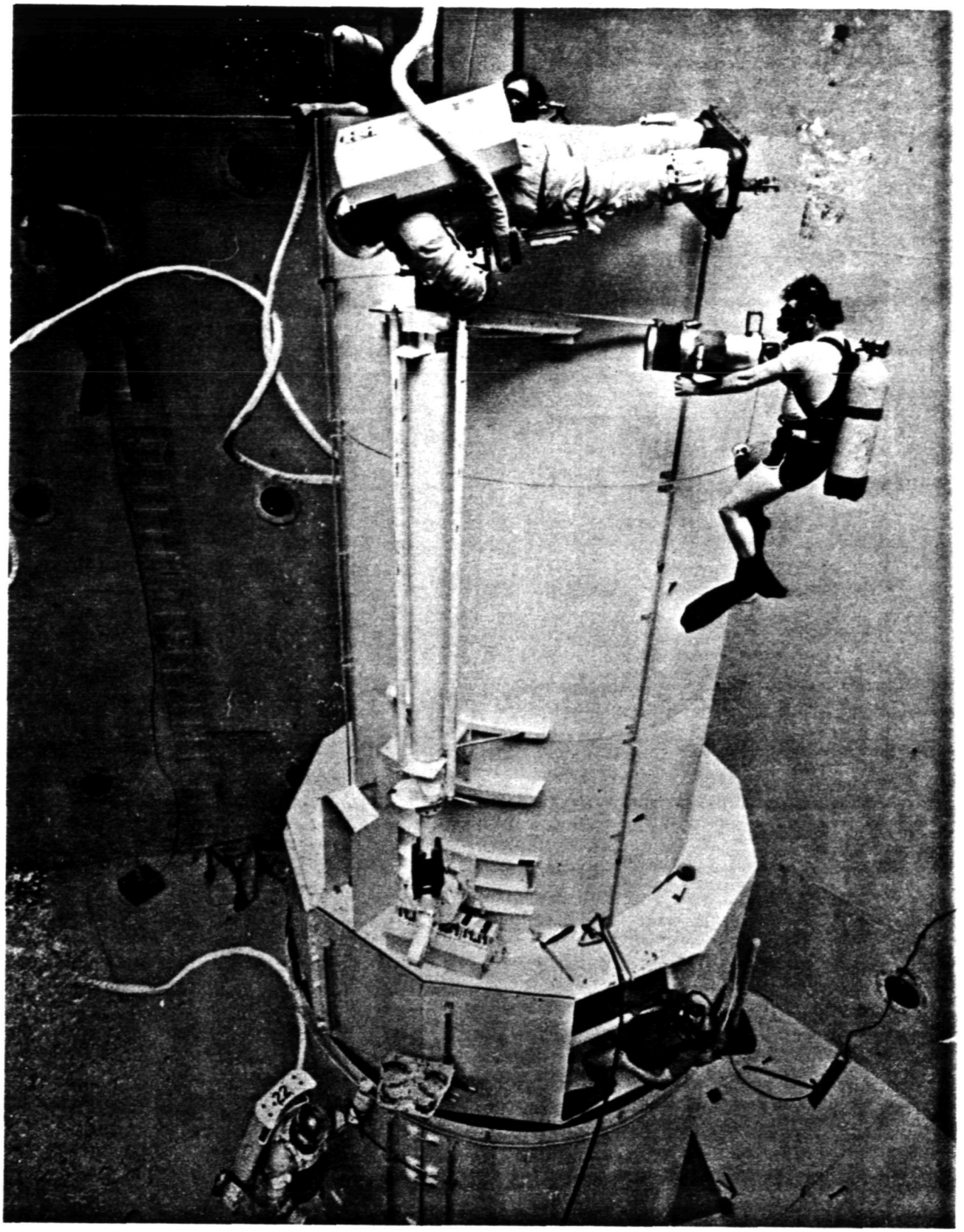

Figure 34. (Continued)



ORIGINAL PAGE
BLACK AND WHITE PHOTOGRAPH

ORIGINAL PAGE
BLACK AND WHITE PHOTOGRAPH

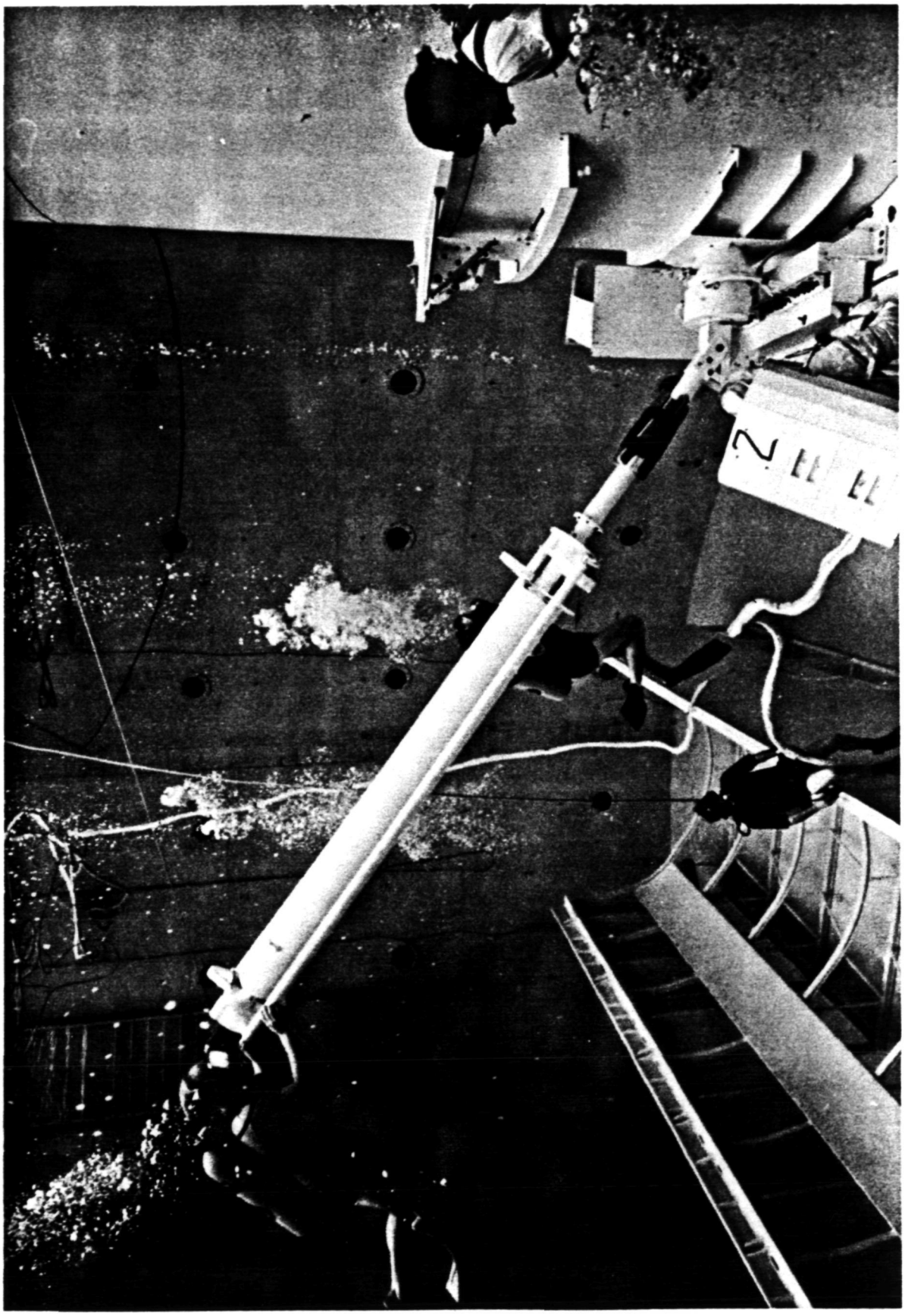

Figure 34. (Concluded)

ORIGINAL PAGE
BLACK AND WHITE PHOTOGRAPH

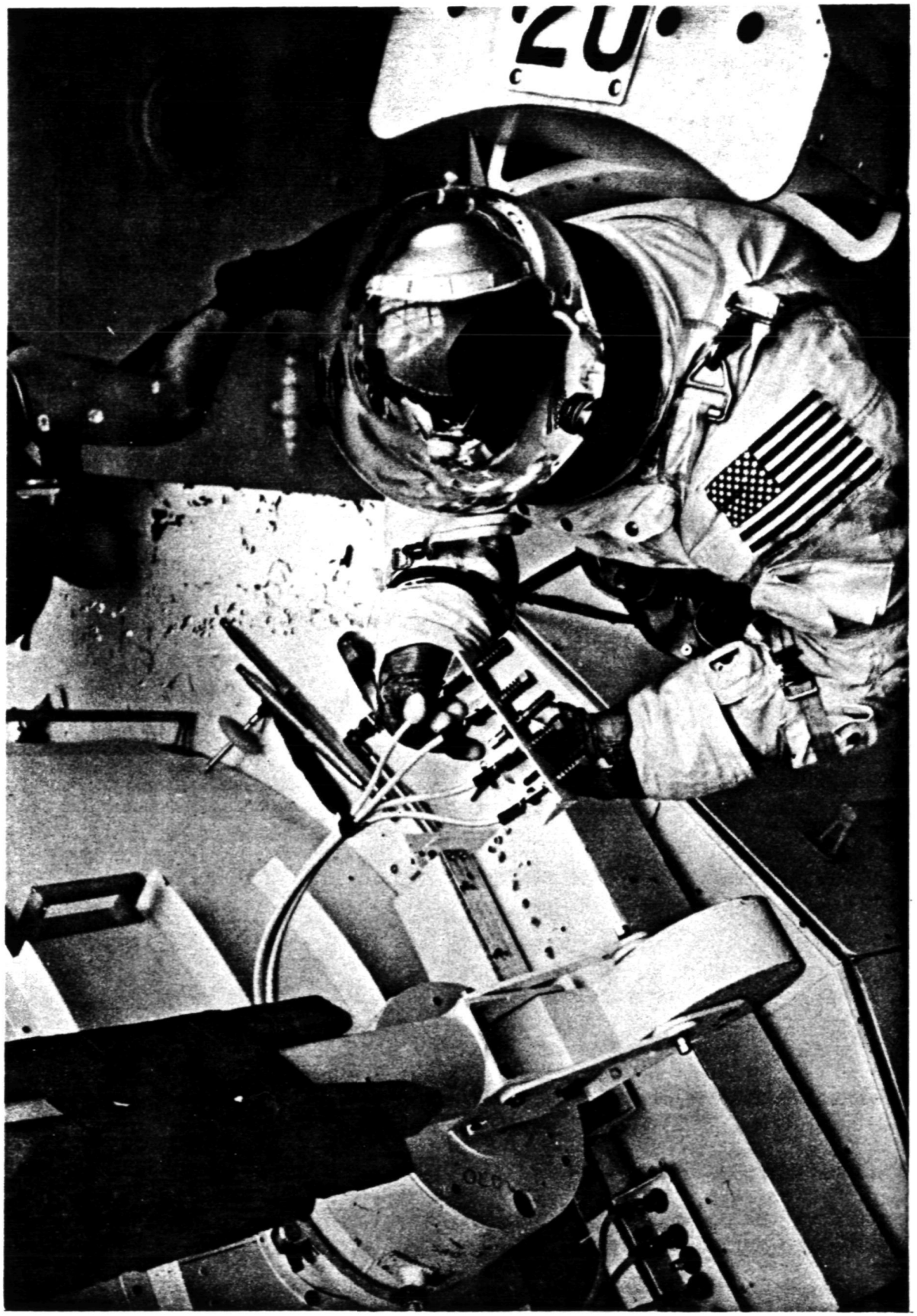

Figure 35. Early solar array diode box simulations (November 1979).

ORIGINAL PAGE
BLACK AND WHITE PHOTOGRAPH

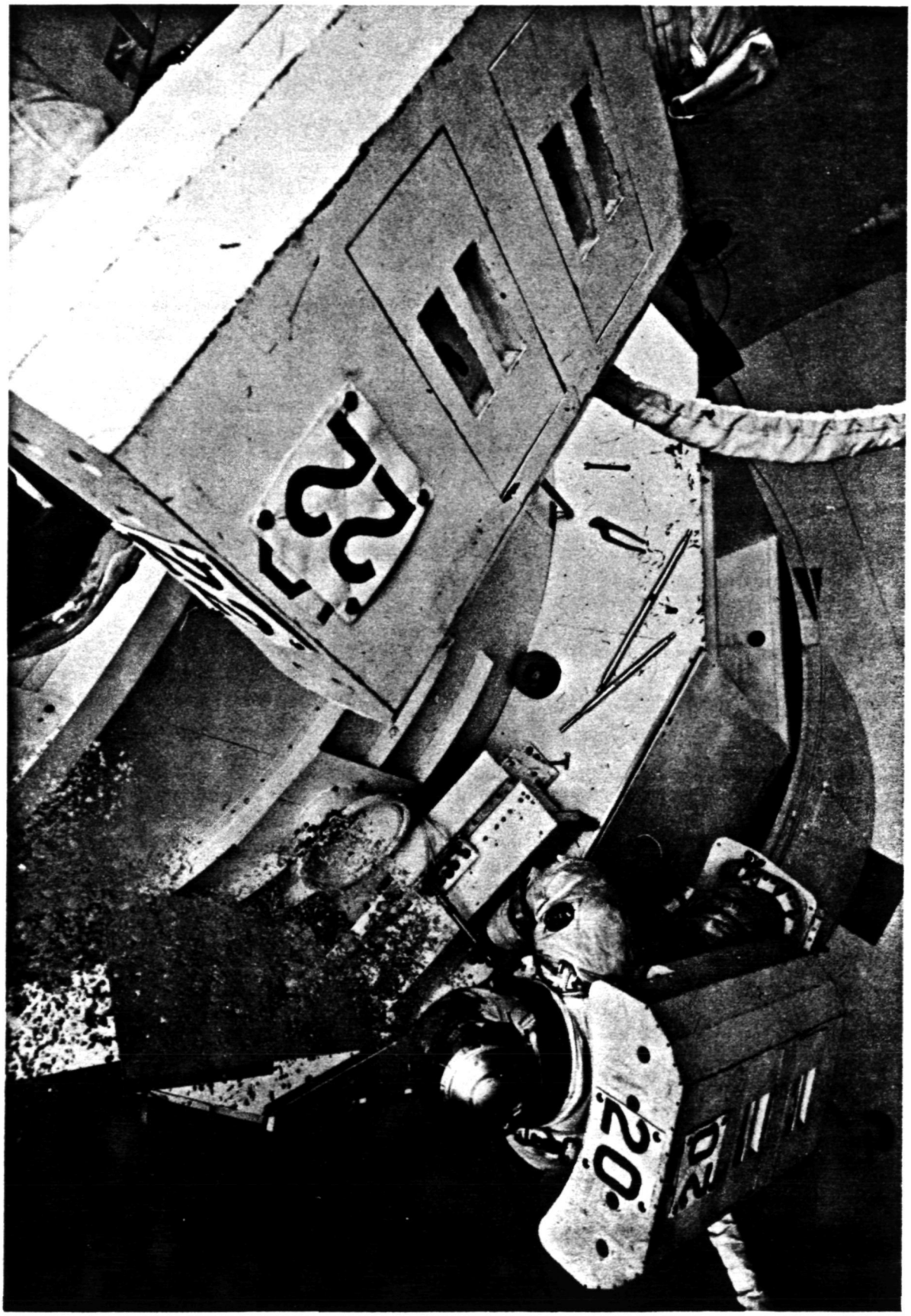


Figure 35. (Concluded)

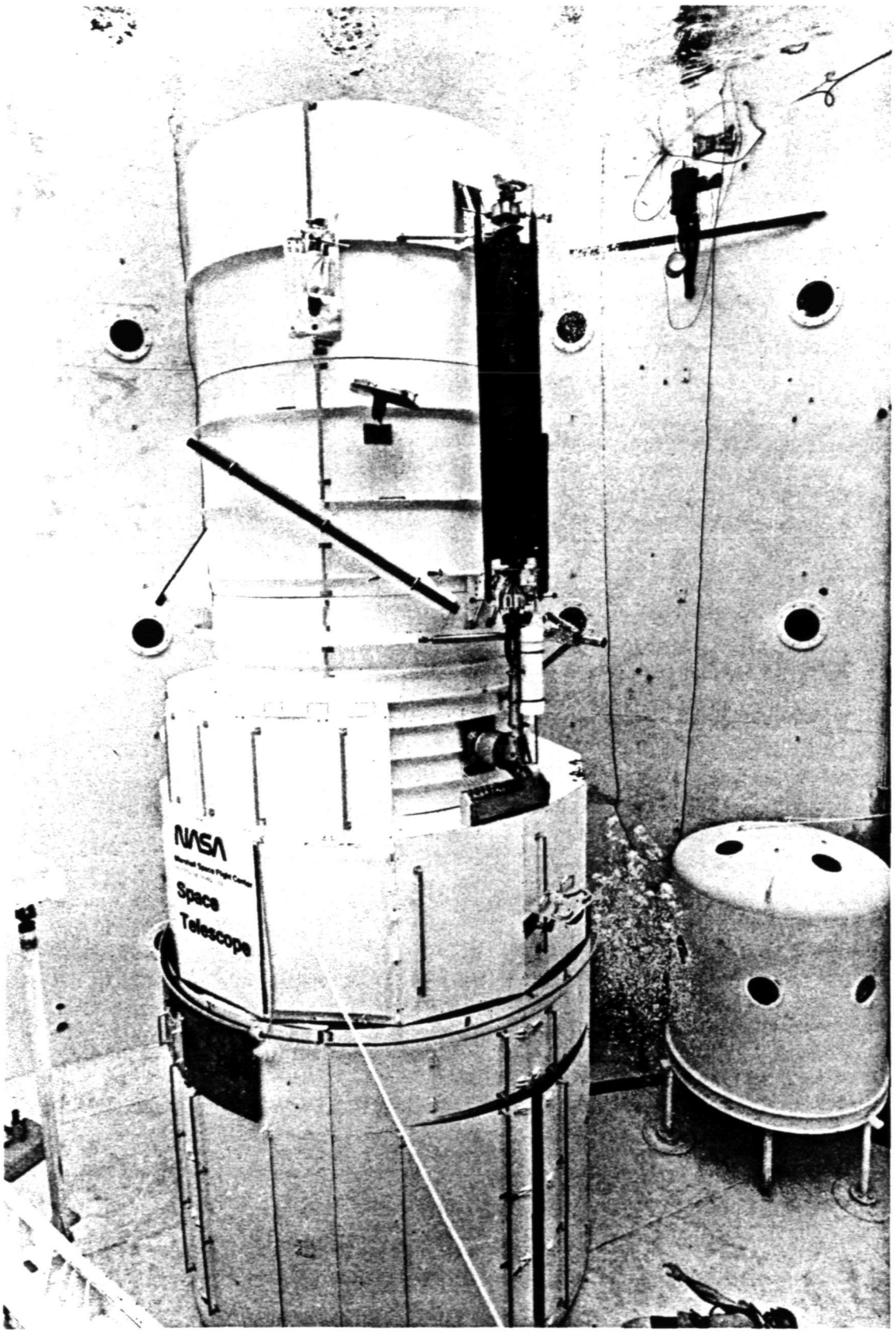


Figure 36. High fidelity solar array mockup and associated hardware.



ORIGINAL PAGE
BLACK AND WHITE PHOTOGRAPH

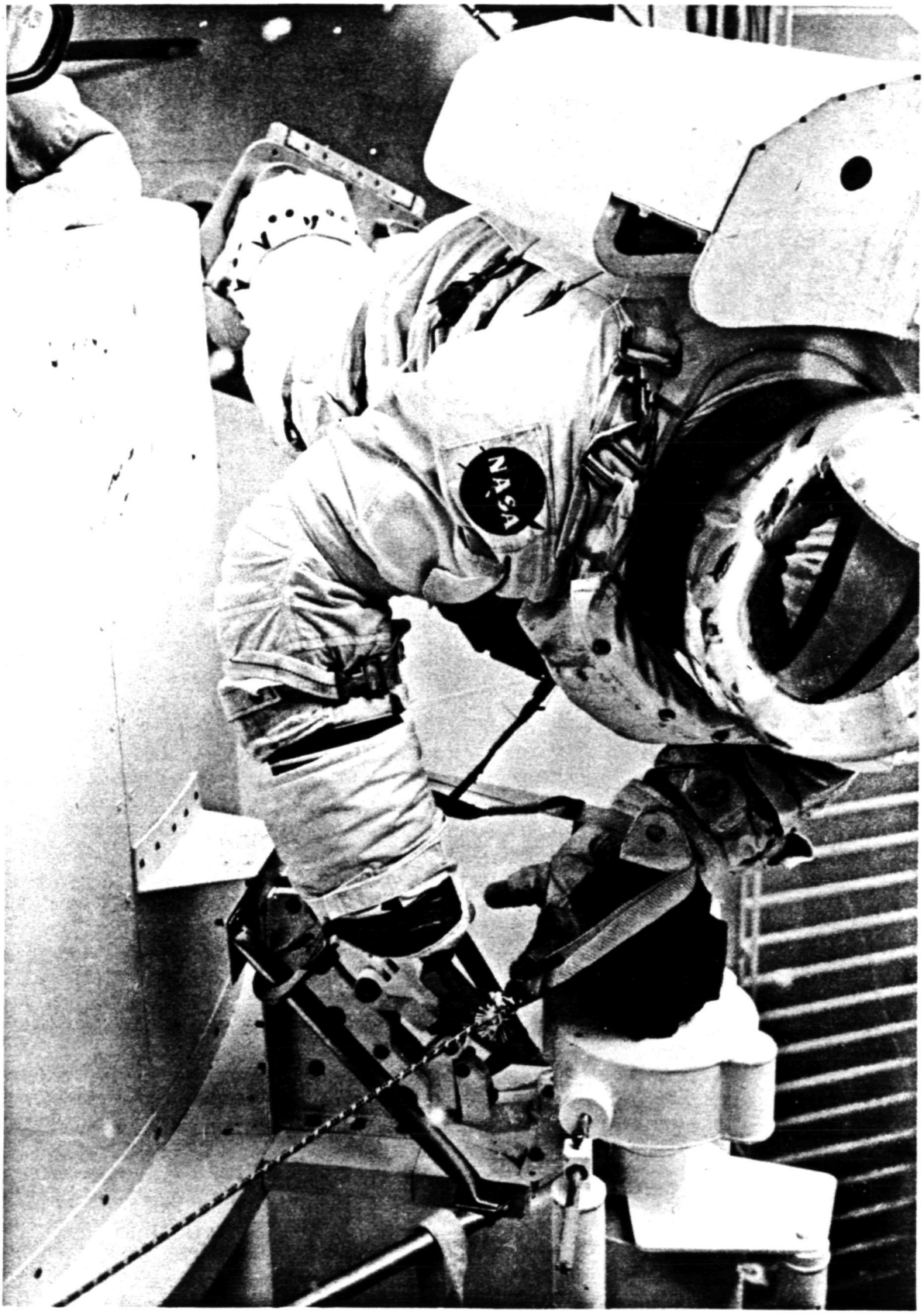


Figure 37. Early forward latch test (November 1979).

ORIGINAL PAGE
BLACK AND WHITE PHOTOGRAPH

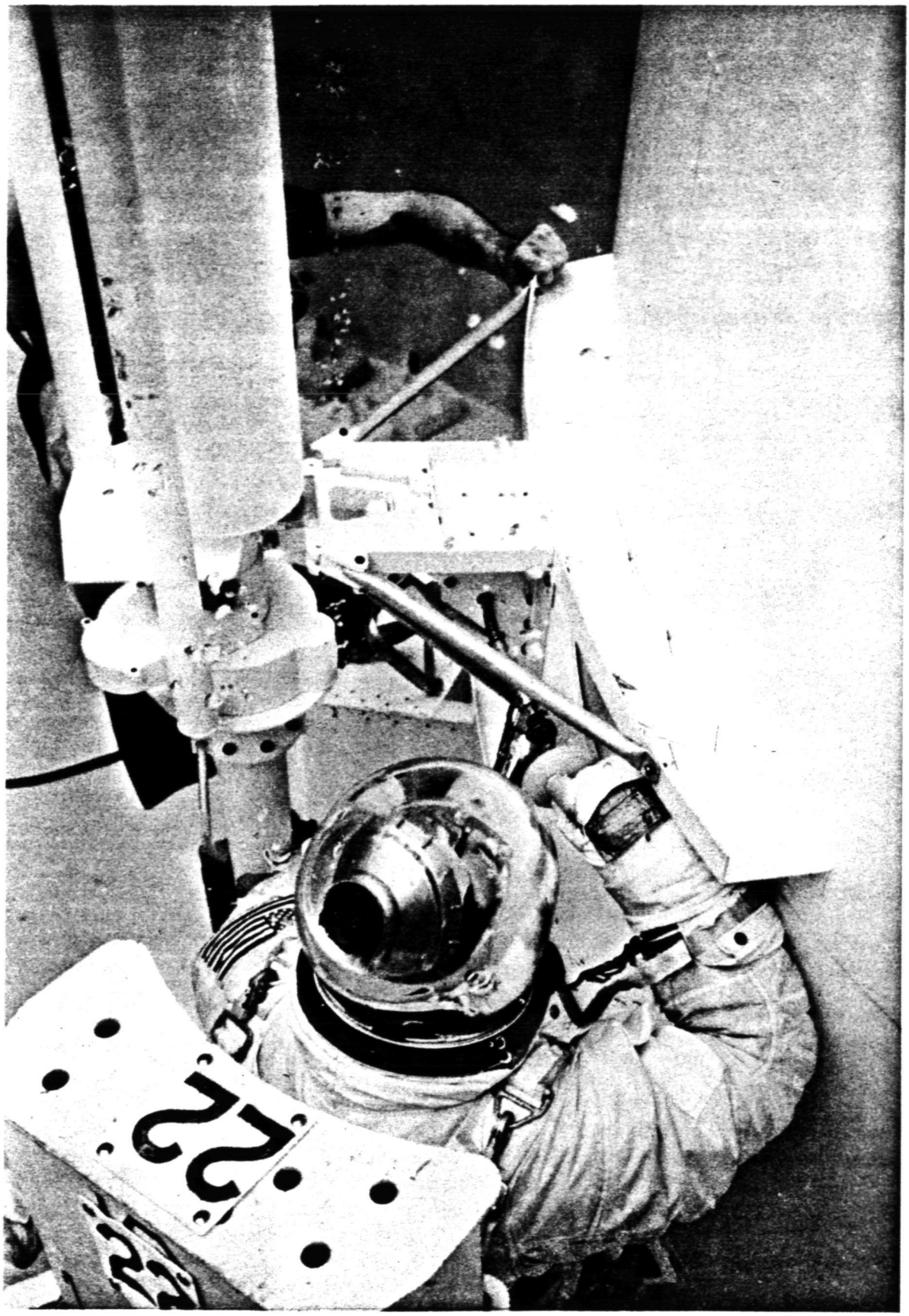

Figure 37. Early aft latch test (November 1979).



ORIGINAL PAGE
BLACK AND WHITE PHOTOGRAPH

ORIGINAL PAGE
BLACK AND WHITE PHOTOGRAPH

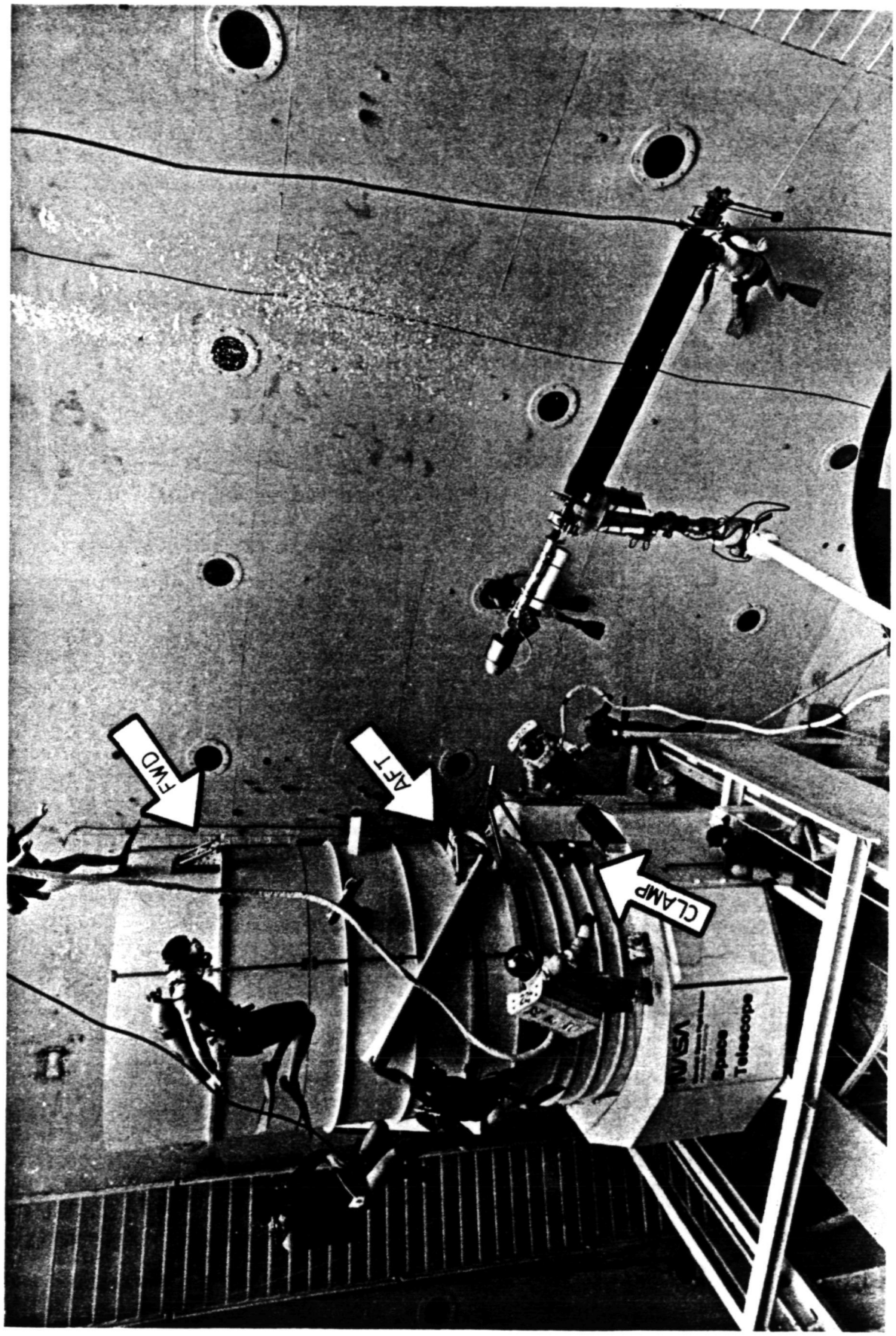


Figure 38. Forward and aft latch and jettison clamp locations on light shield during RMS jettison simulation.

ORIGINAL PAGE IS
OF POOR QUALITY

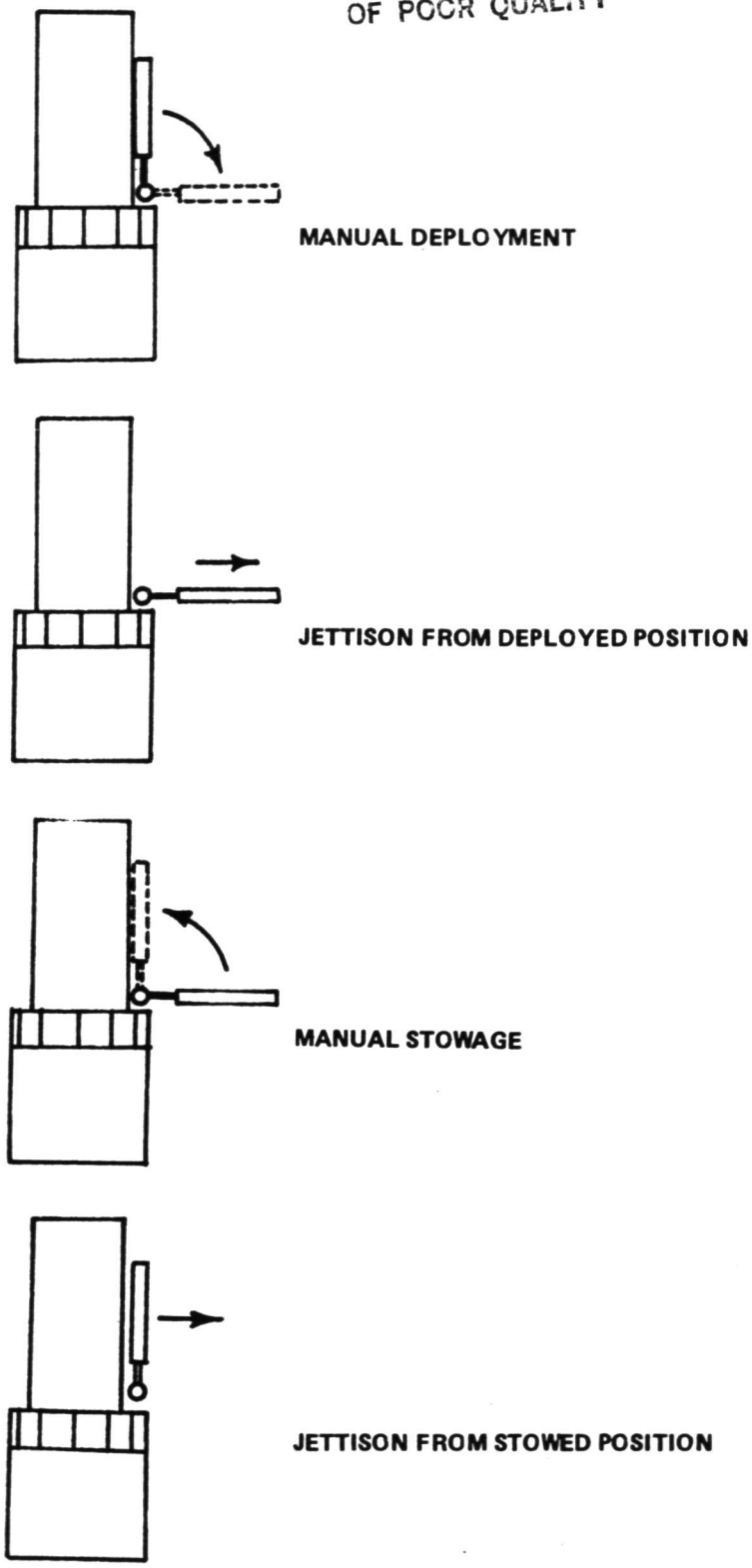


Figure 39. Solar array contingency tasks.

ORIGINAL PAGE
BLACK AND WHITE PHOTOGRAPH

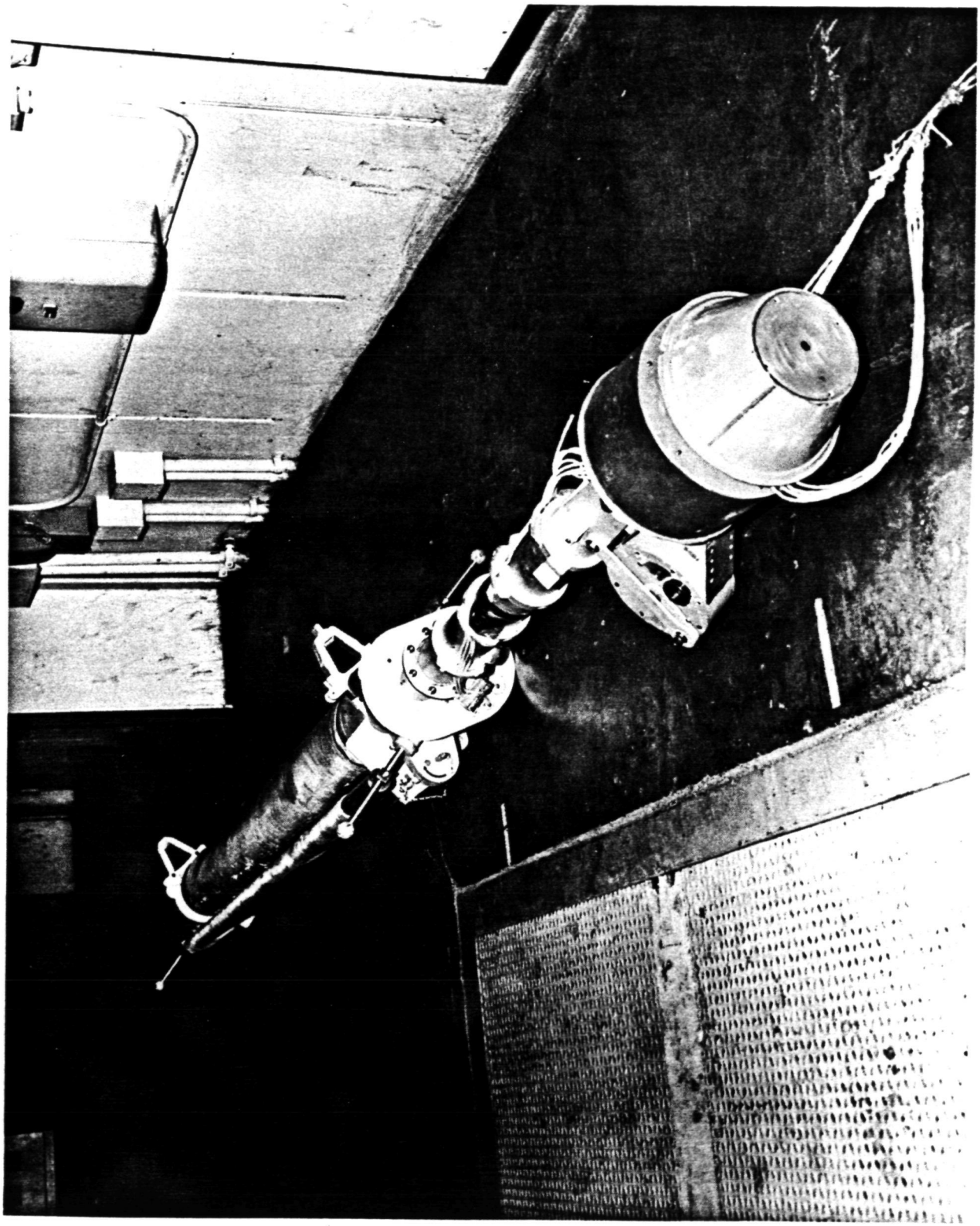

Figure 40. Solar array mockup.

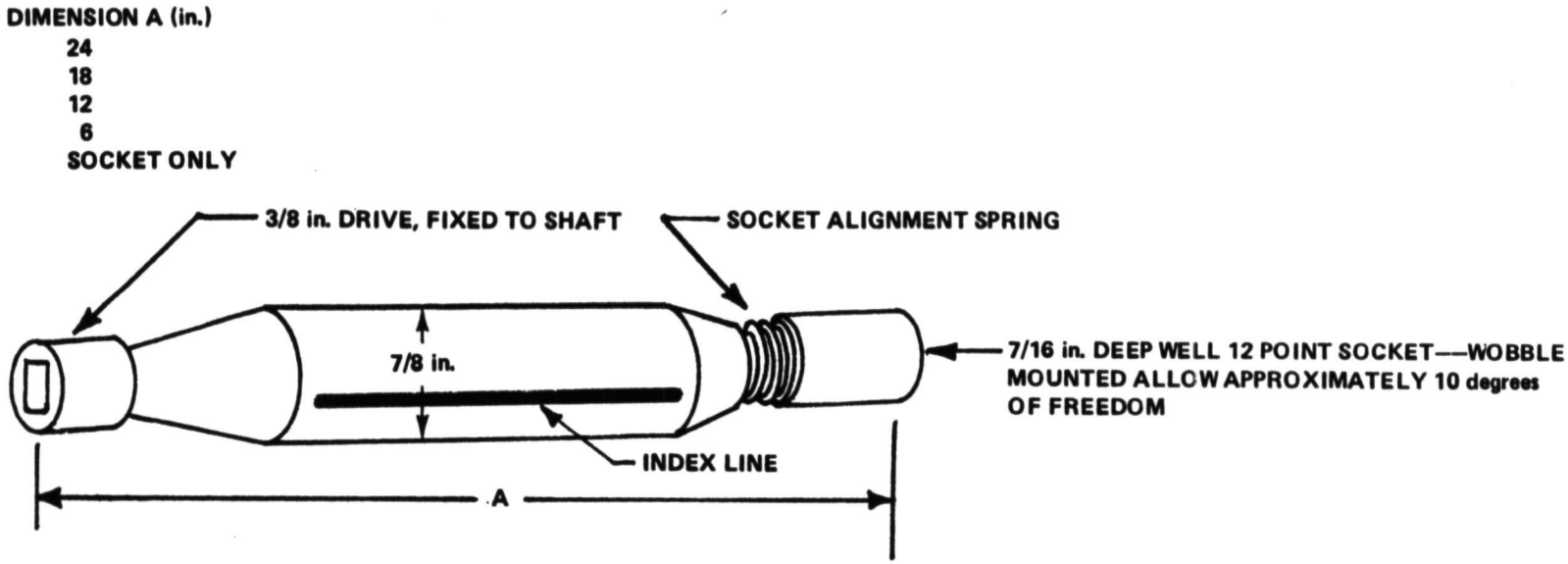


Figure 41. Wrench extension diagram.

ORIGINAL PAGE IS
OF POOR QUALITY

ORIGINAL PAGE
BLACK AND WHITE PHOTOGRAPH

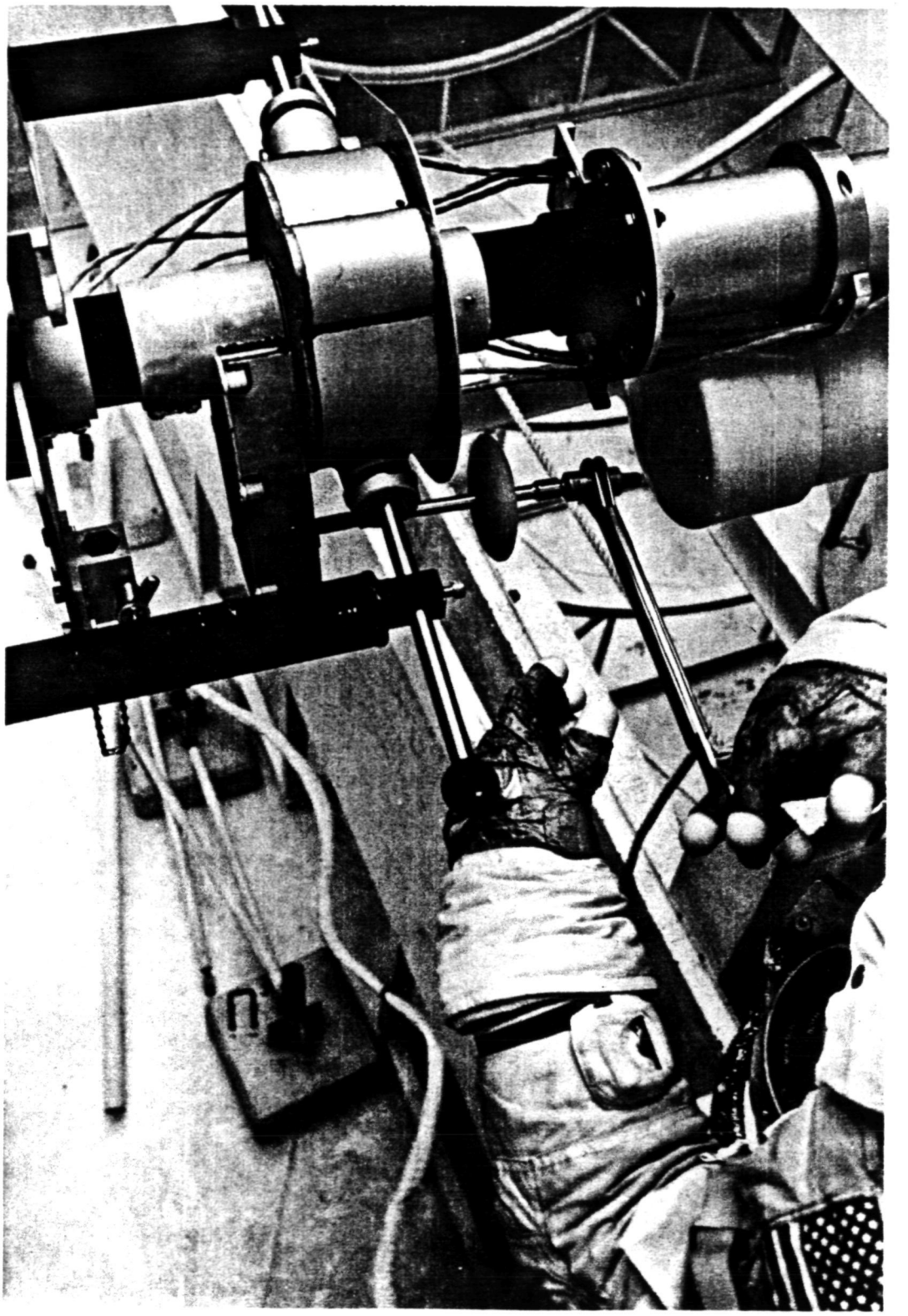

Figure 41. Wrench extension as required for SA tasks.

ORIGINAL PAGE
BLACK AND WHITE PHOTOGRAPH

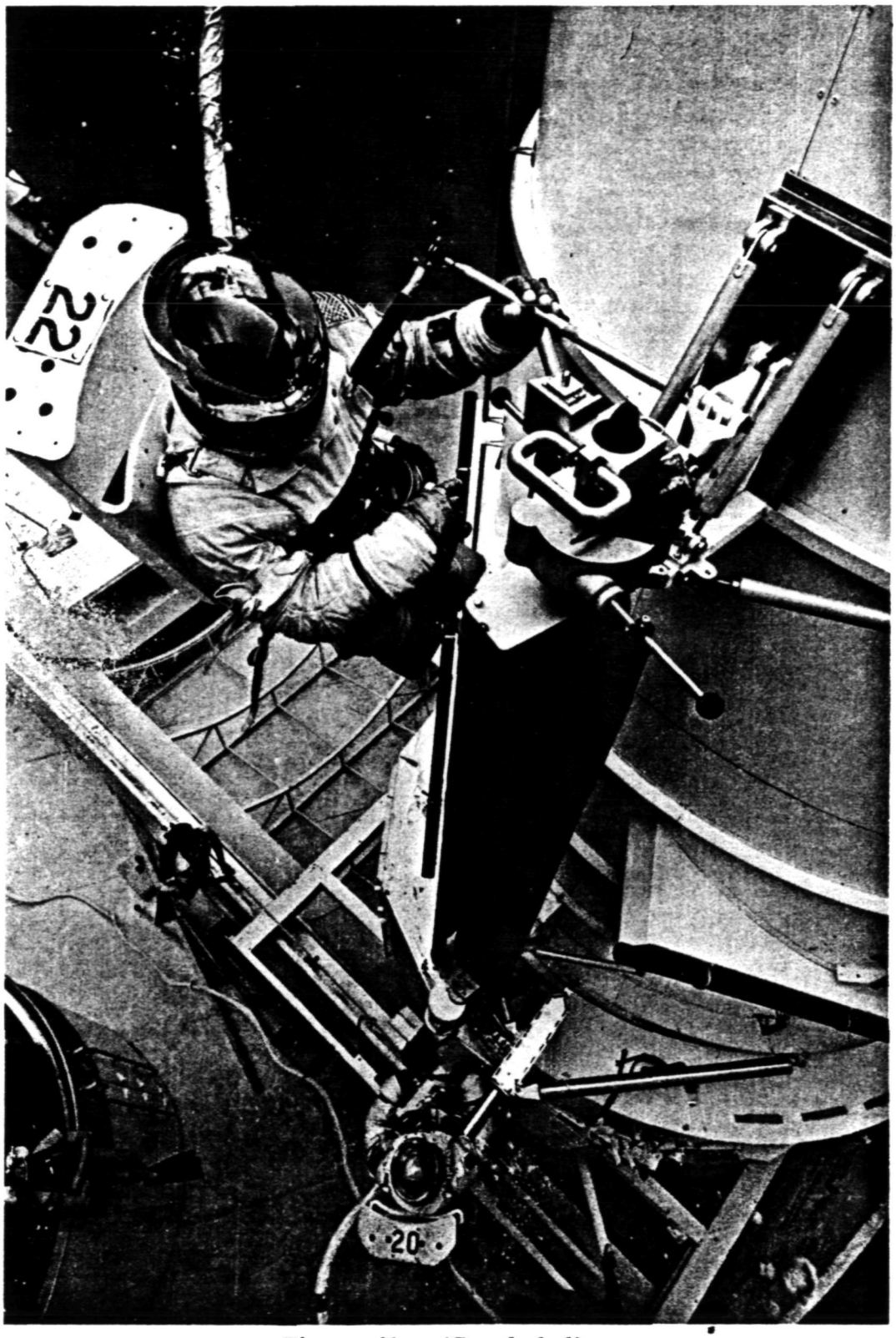


Figure 41. (Concluded)

ORIGINAL PAGE
BLACK AND WHITE PHOTOGRAPH

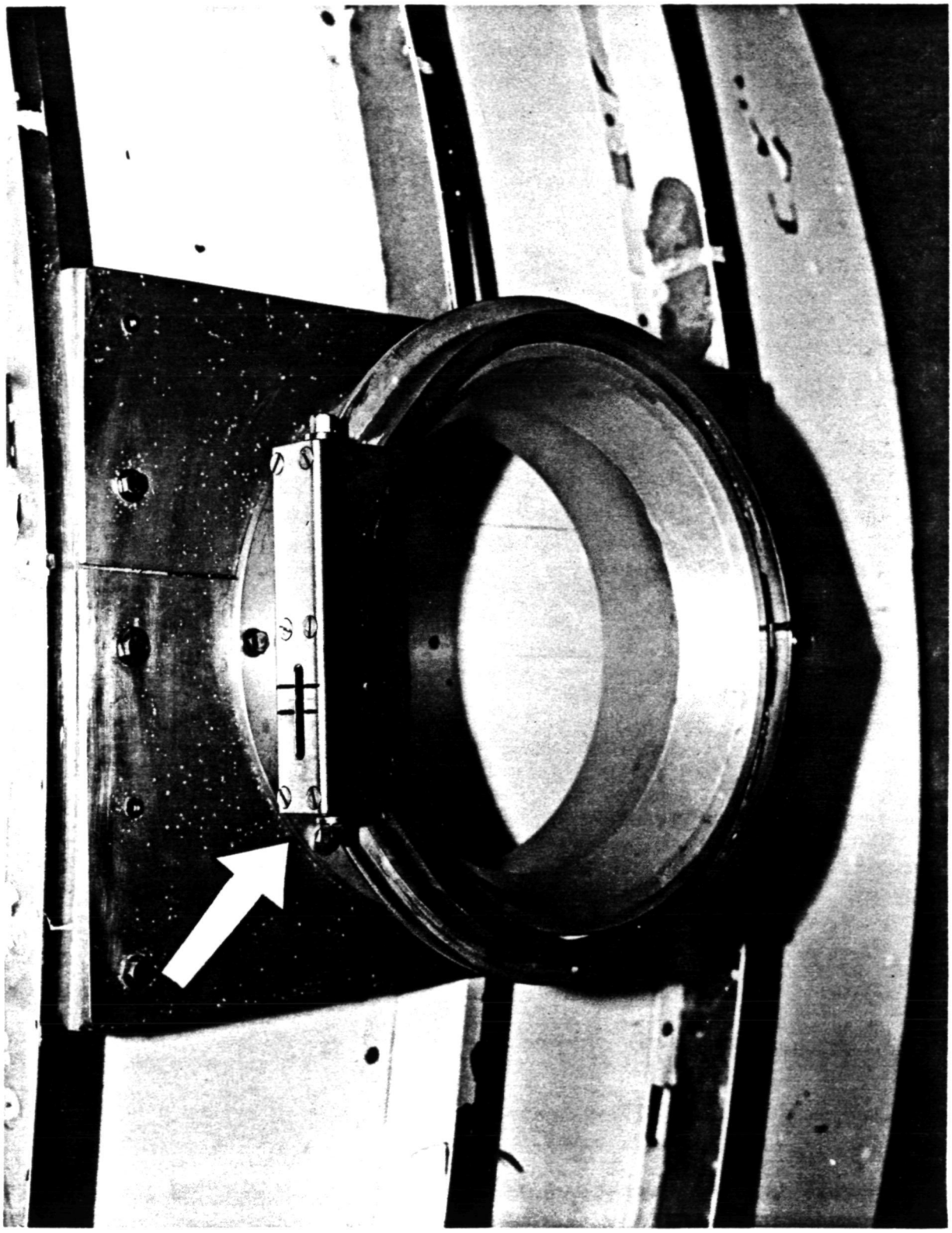

Figure 42. Jettison clamp index marks.

ORIGINAL PAGE
BLACK AND WHITE PHOTOGRAPH

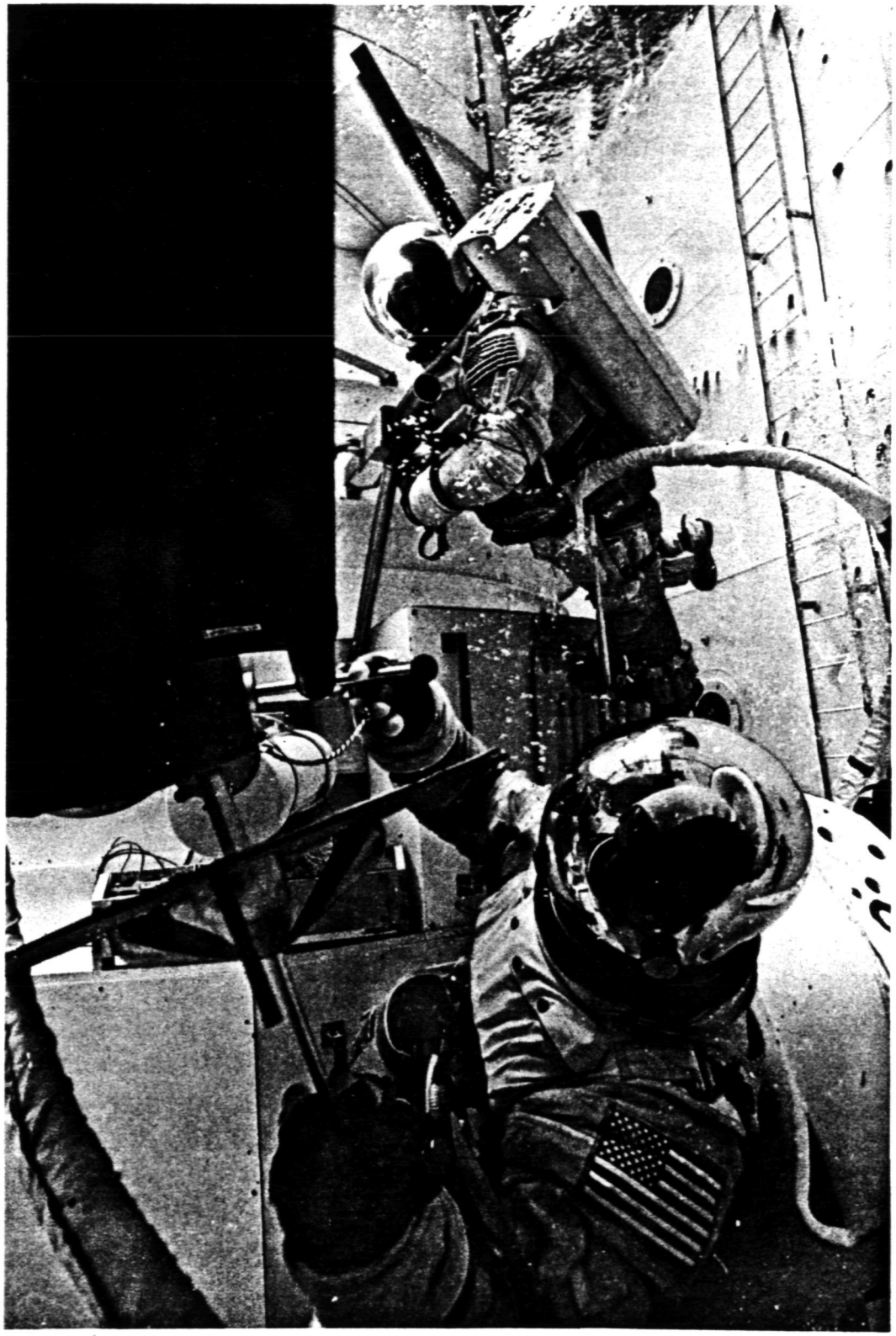

Figure 43. Portable grapple fixture installation visibility problem.

ORIGINAL PAGE
BLACK AND WHITE PHOTOGRAPH

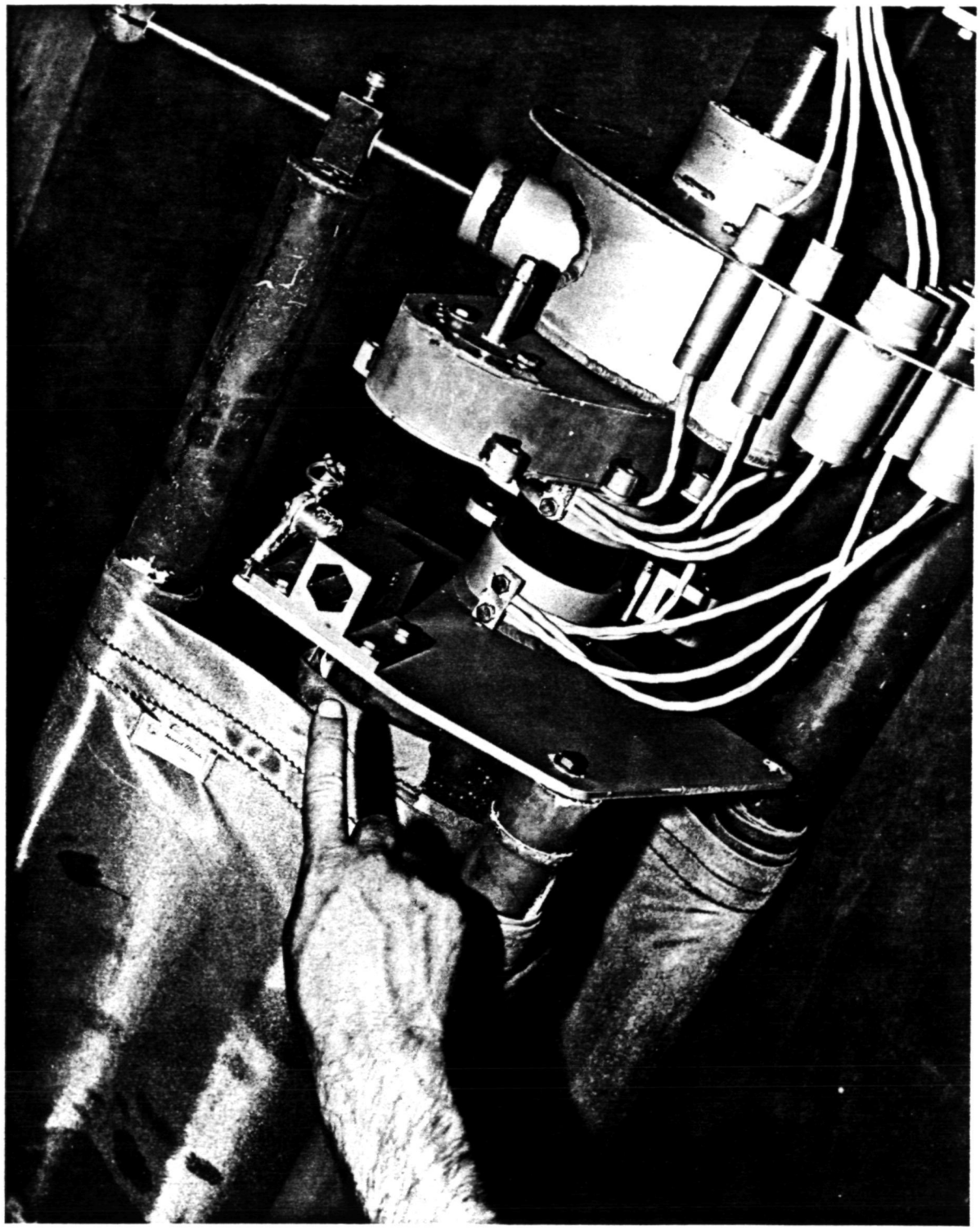

Figure 44. Solar array grapple fixture installation socket.

ORIGINAL PAGE
BLACK AND WHITE PHOTOGRAPH

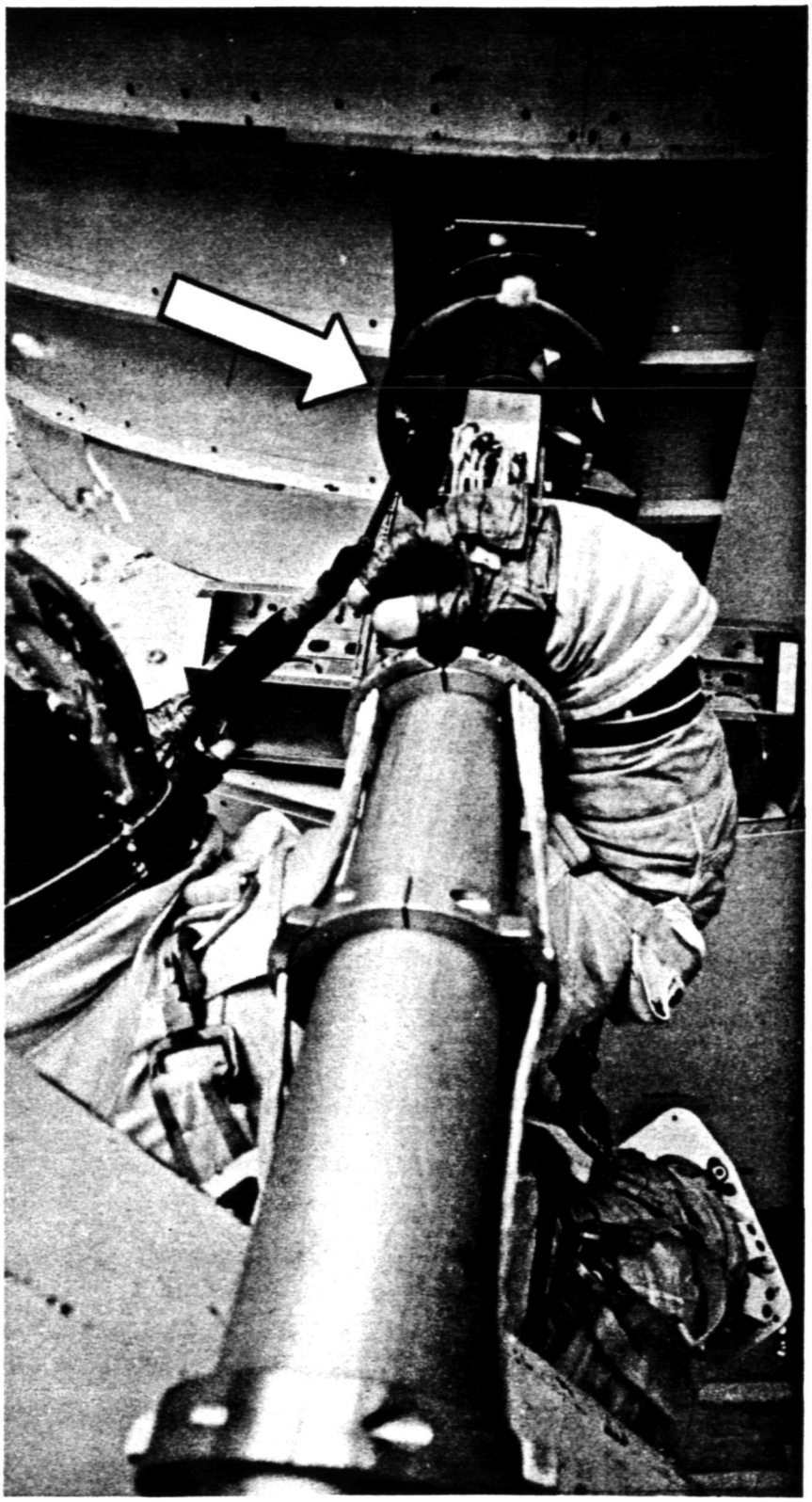

Figure 45. Direction and number-of-turns placard.

ORIGINAL PAGE IS
OF POOR QUALITY

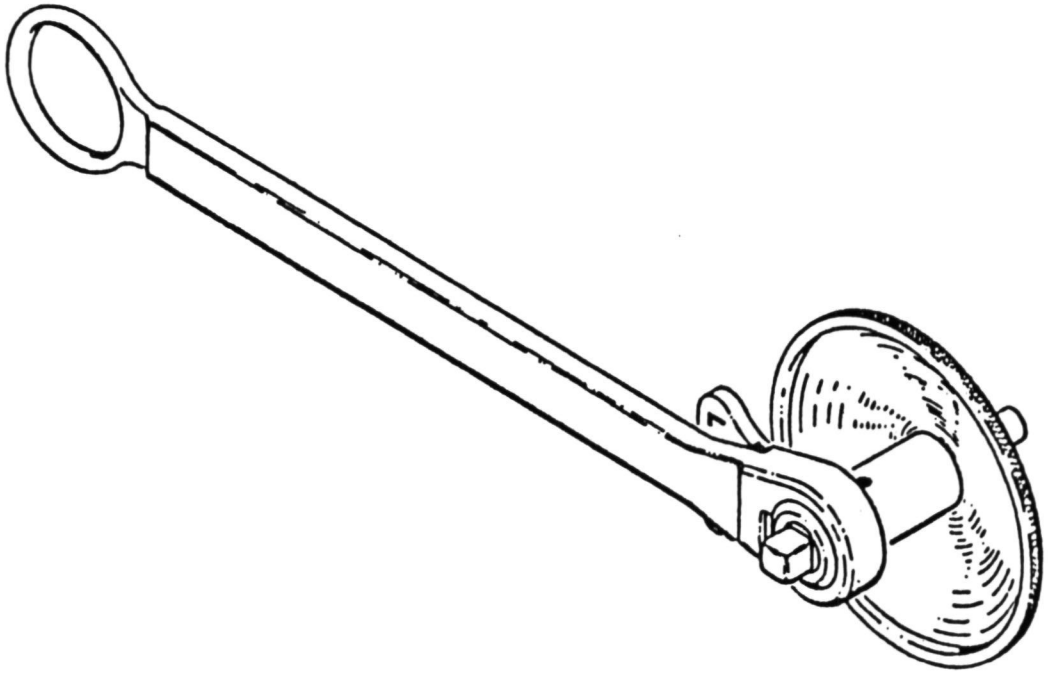

- DRIVE:

  3/8-INCH RATCHET, 12-INCH LONG HANDLE, REVERSING, WITH LOCK FEATURE - EXACT CONFIGURATION TBD

- TORQUE LIMITING DEVICE(S)

Figure 46. ST baseline ratchet wrench.

ORIGINAL PAGE
BLACK AND WHITE PHOTOGRAPH

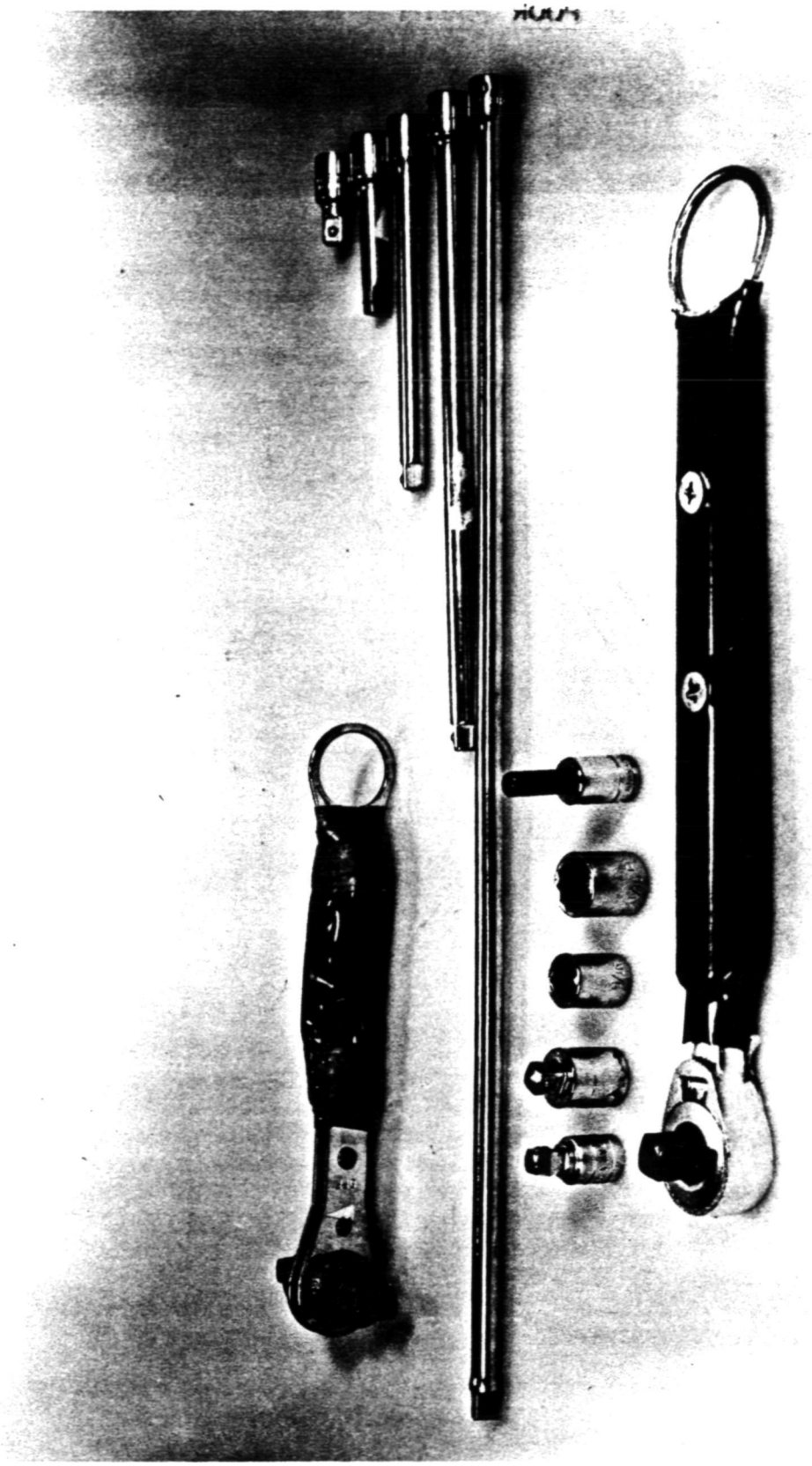

Figure 47. Early socket extension and wrenches.

ORIGINAL PAGE IS
OF POOR QUALITY

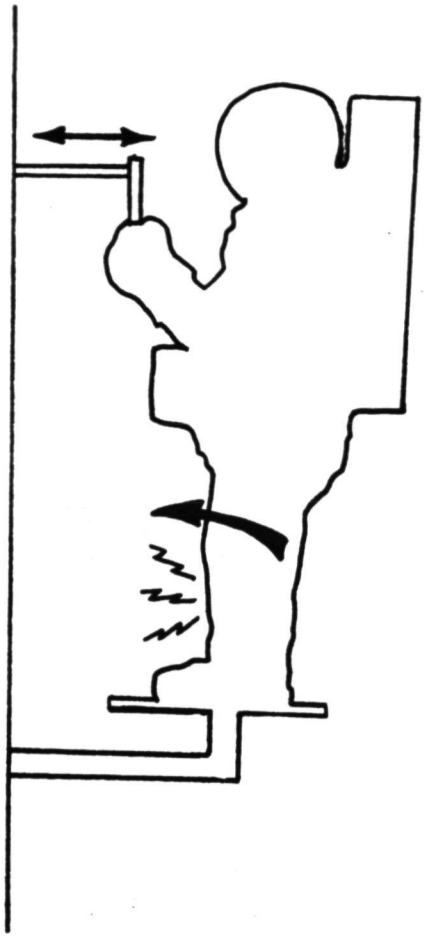

Figure 48. Induced leg fatigue.

ORIGINAL PAGE IS
OF POOR QUALITY

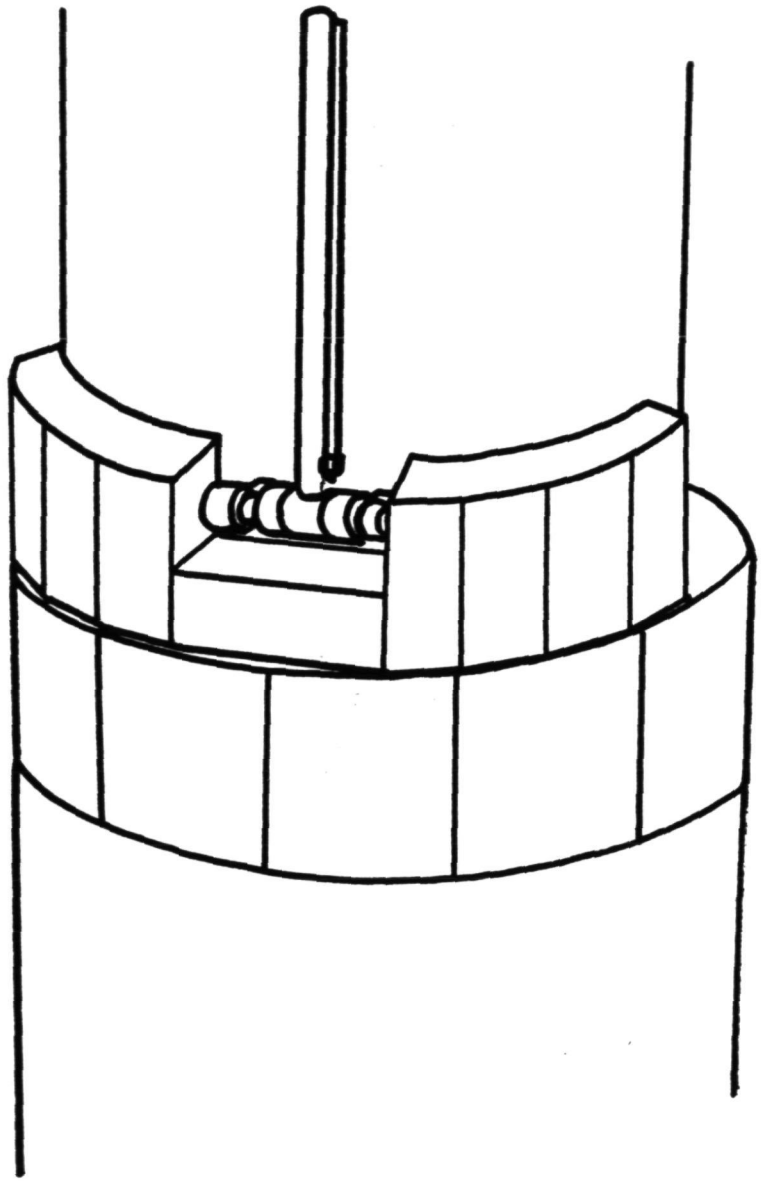

Figure 49. HGA access problem.

ORIGINAL PAGE
BLACK AND WHITE PHOTOGRAPH

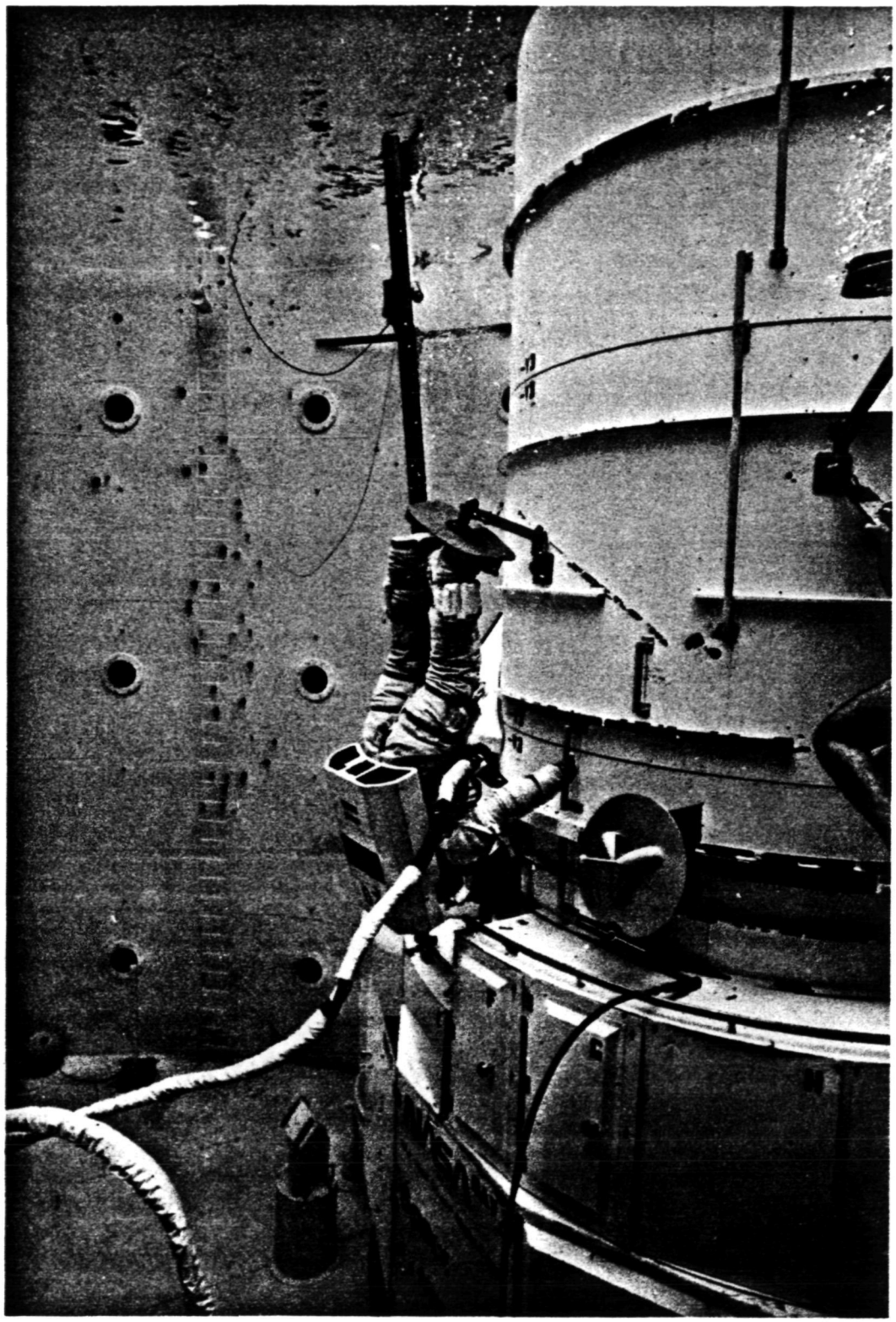

Figure 49. (Concluded)

ORIGINAL PAGE
BLACK AND WHITE PHOTOGRAPH

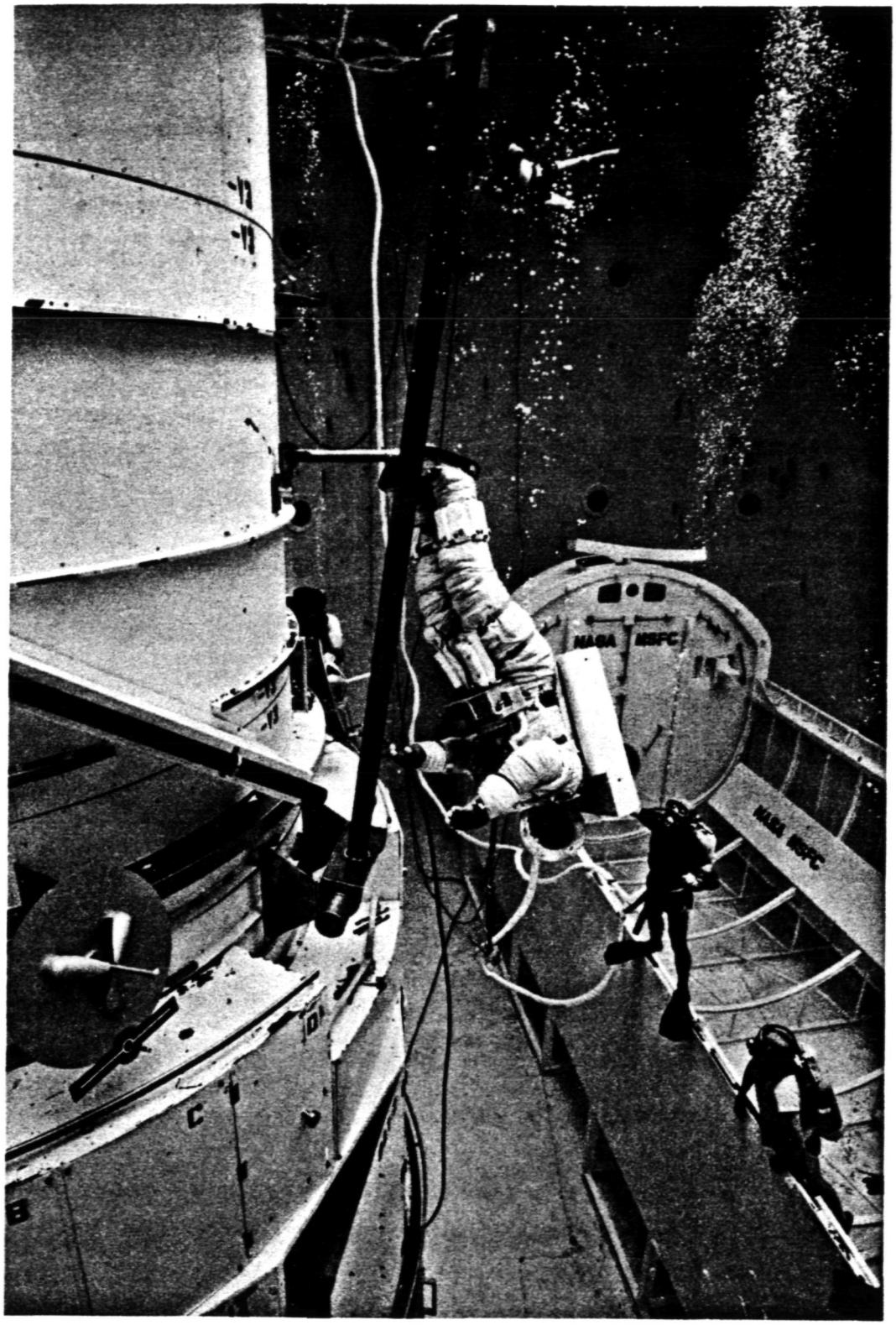


Figure 50. HGA foot restraint location test.

ORIGINAL PAGE
BLACK AND WHITE PHOTOGRAPH

Figure 51. Early FR designs.



C-2

ORIGINAL PAGE
BLACK AND WHITE PHOTOGRAPH

Figure 51. (Continued)

ORIGINAL PAGE
BLACK AND WHITE PHOTOGRAPH

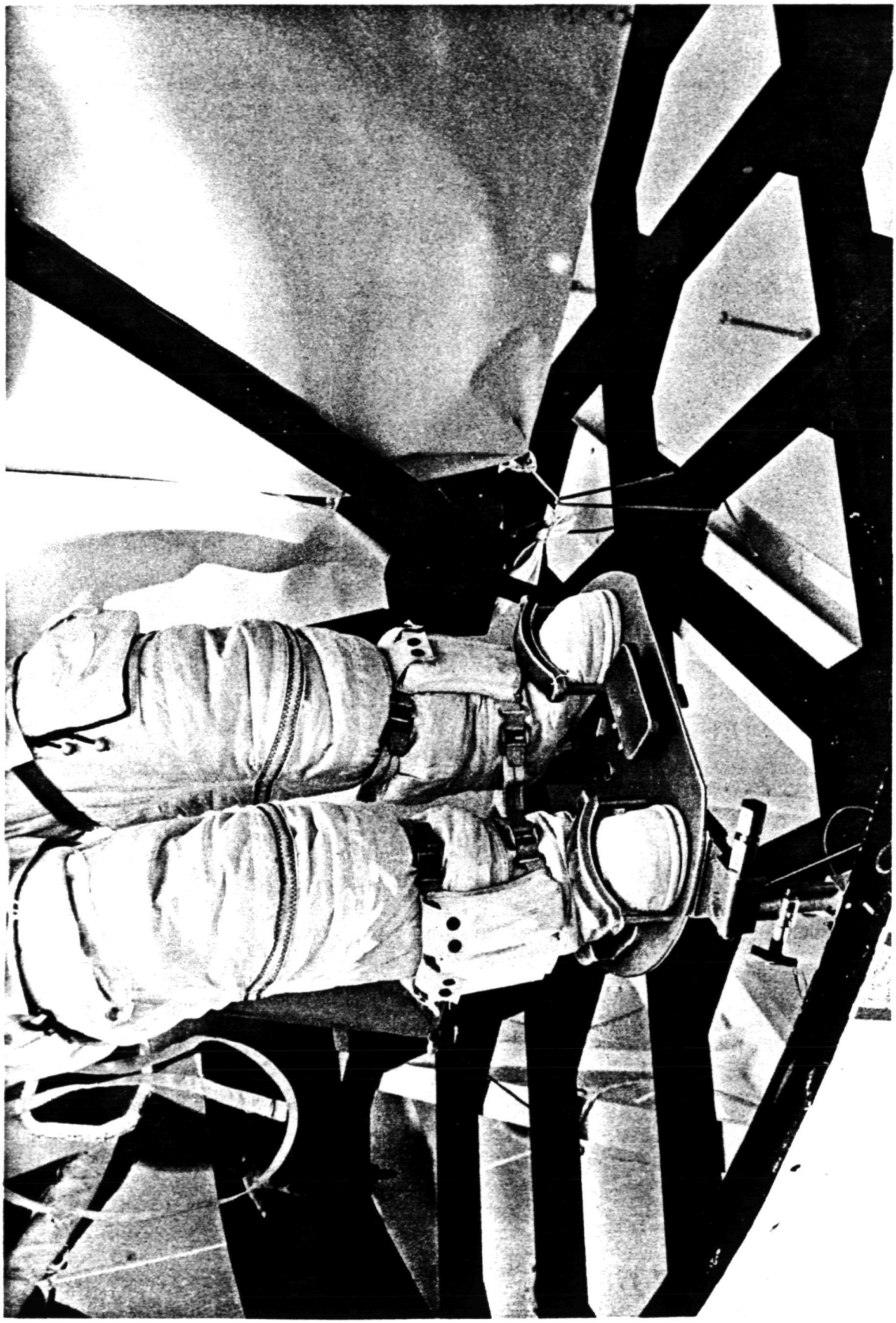

Figure 51. (Continued)

ORIGINAL PAGE
BLACK AND WHITE PHOTOGRAPH

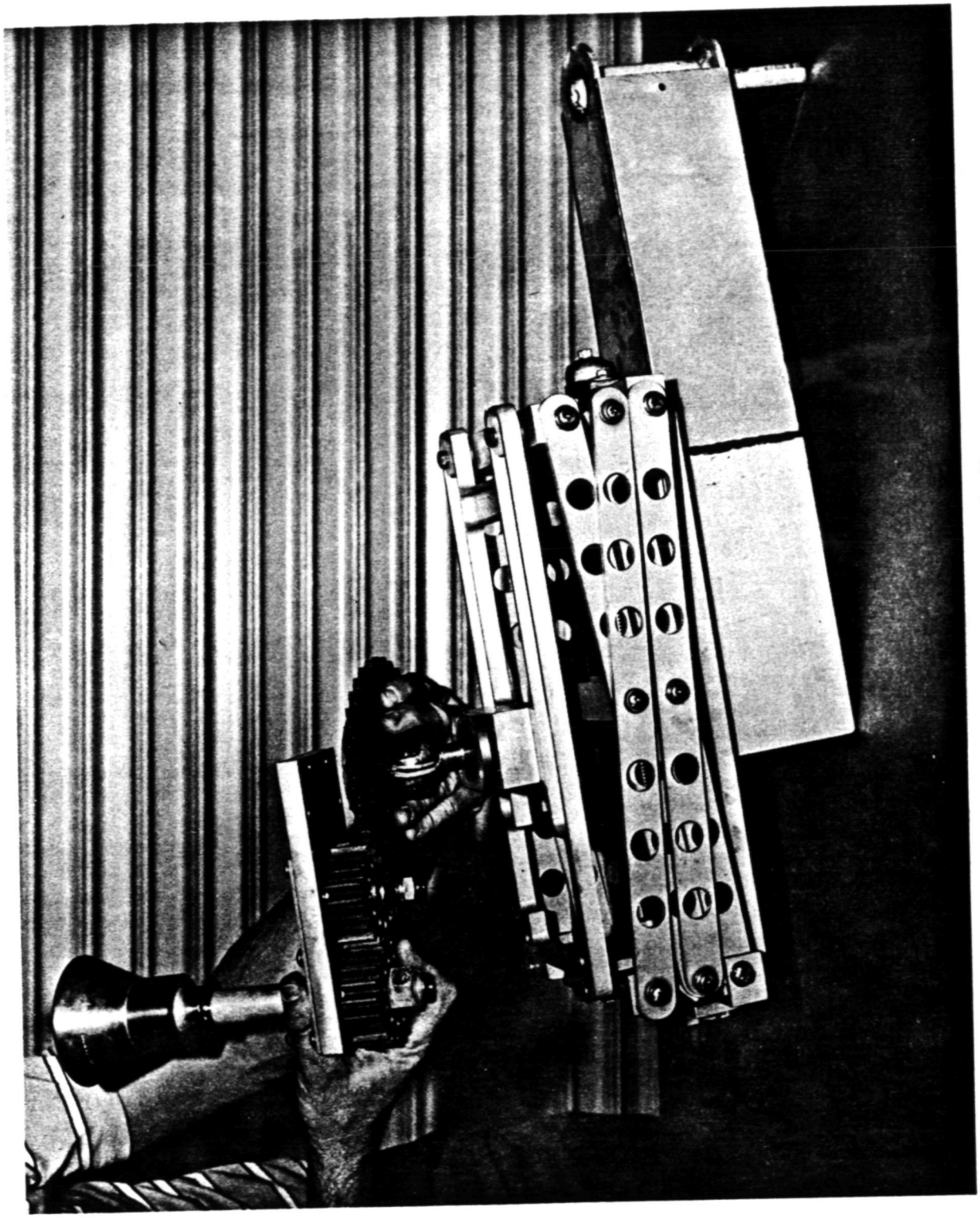

Figure 51. (Concluded)

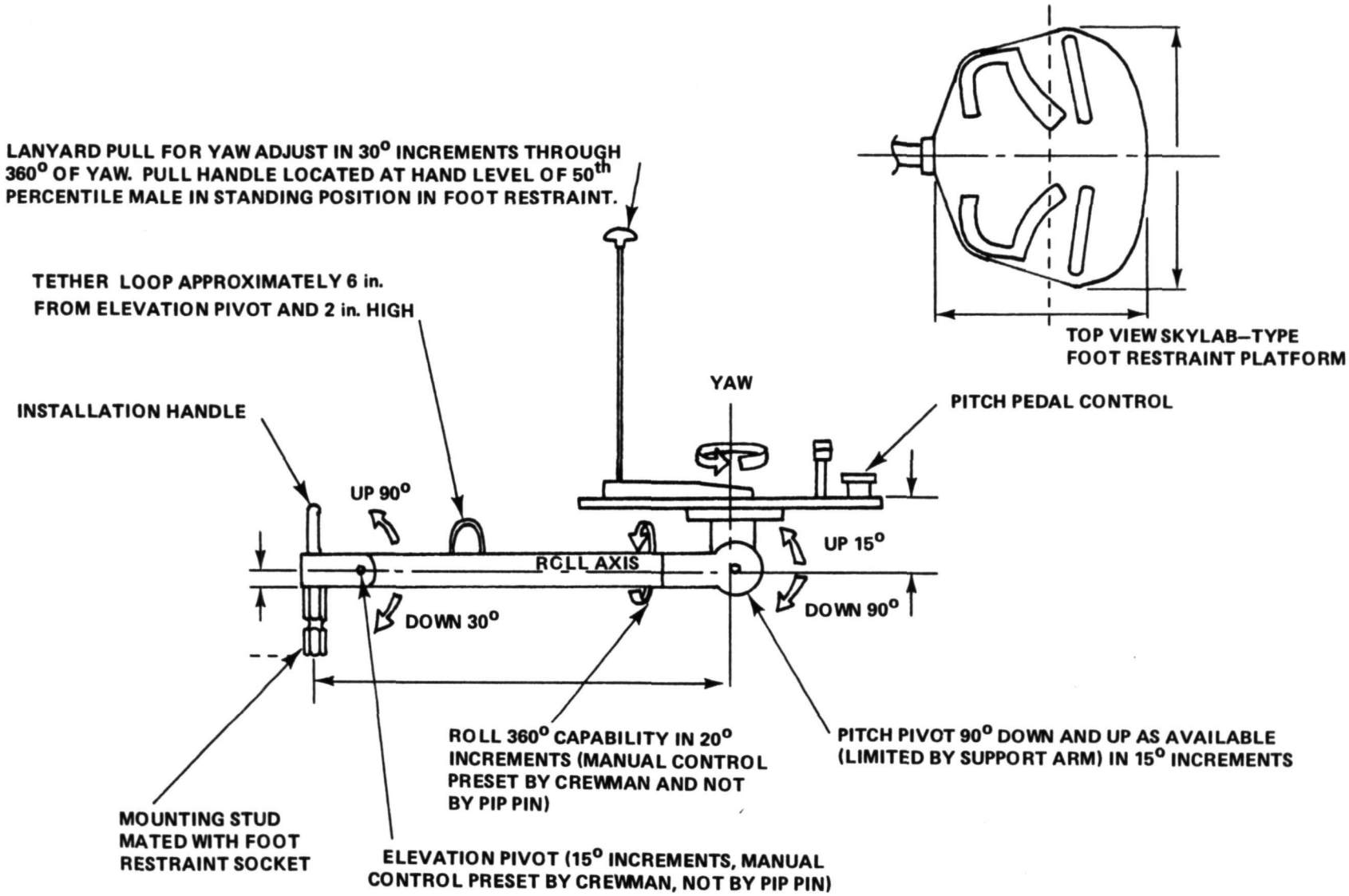


Figure 52. Portable foot restraint.

ORIGINAL PAGE IS OF POOR QUALITY

ORIGINAL PAGE IS
OF POOR QUALITY

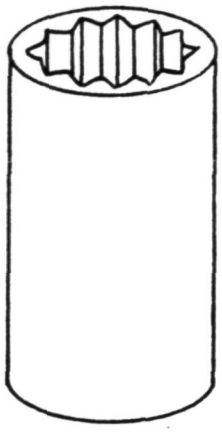

Figure 53. ST female 12 point hex socket interface.

| ROLL | YAW | PITCH | ELEVATION |
|---|---|---|---|
| A - 0° | 1 - 0° | AA - Up 15° | JJ - Up 90° |
| B - 20° CW | 2 - 30° CW | BB - Level | KK - Up 75° |
| C - 40° CW | 3 - 60° CW | CC - Down 30° | LL - Up 60° |
| D - 60° CW | 4 - 90° CW | DD - Down 30° | MM - Up 45° |
| E - 80° CW | 5 - 120° CW | EE - Down 45° | NN - Up 30° |
| F - 100° CW | 6 - 150° CW | FF - Down 60° | OO - Up 15° |
| G - 120° CW | 7 - 180° CW | GG - Down 75° | PP - Level |
| H - 140° CW | 8 - 210° CW | HH - Down 90° | QQ - Down 15° |
| J - 160° CW | 9 - 240° CW | Up position in rotation of FR platform backward toward stud, down is forward movement of platform | RR - Down 30° |
| K - 180° CW | 10 - 270° CW | | Up 90° position (JJ) raises FR platform in relation to mounting stud |
| L - 200° CW | 11 - 300° CW | | |
| M - 220° CW | 12 - 330° CW | | |
| N - 240° CW | When viewed from top of platform looking down | | |
| O - 260° CW | | | |
| P - 300° CW | | | |
| Q - 300° CW | | | |
| R - 320° CW | | | |
| S - 340° CW | | | |
| When viewed from stud end looking toward platform | | | |
| 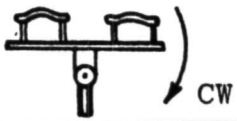  | | 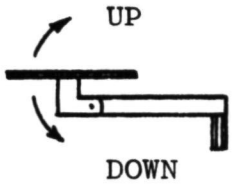  | 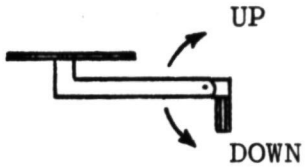  |

Figure 54. Foot restraint articulation.

ORIGINAL PAGE IS OF POOR QUALITY

ORIGINAL PAGE IS
OF POOR QUALITY

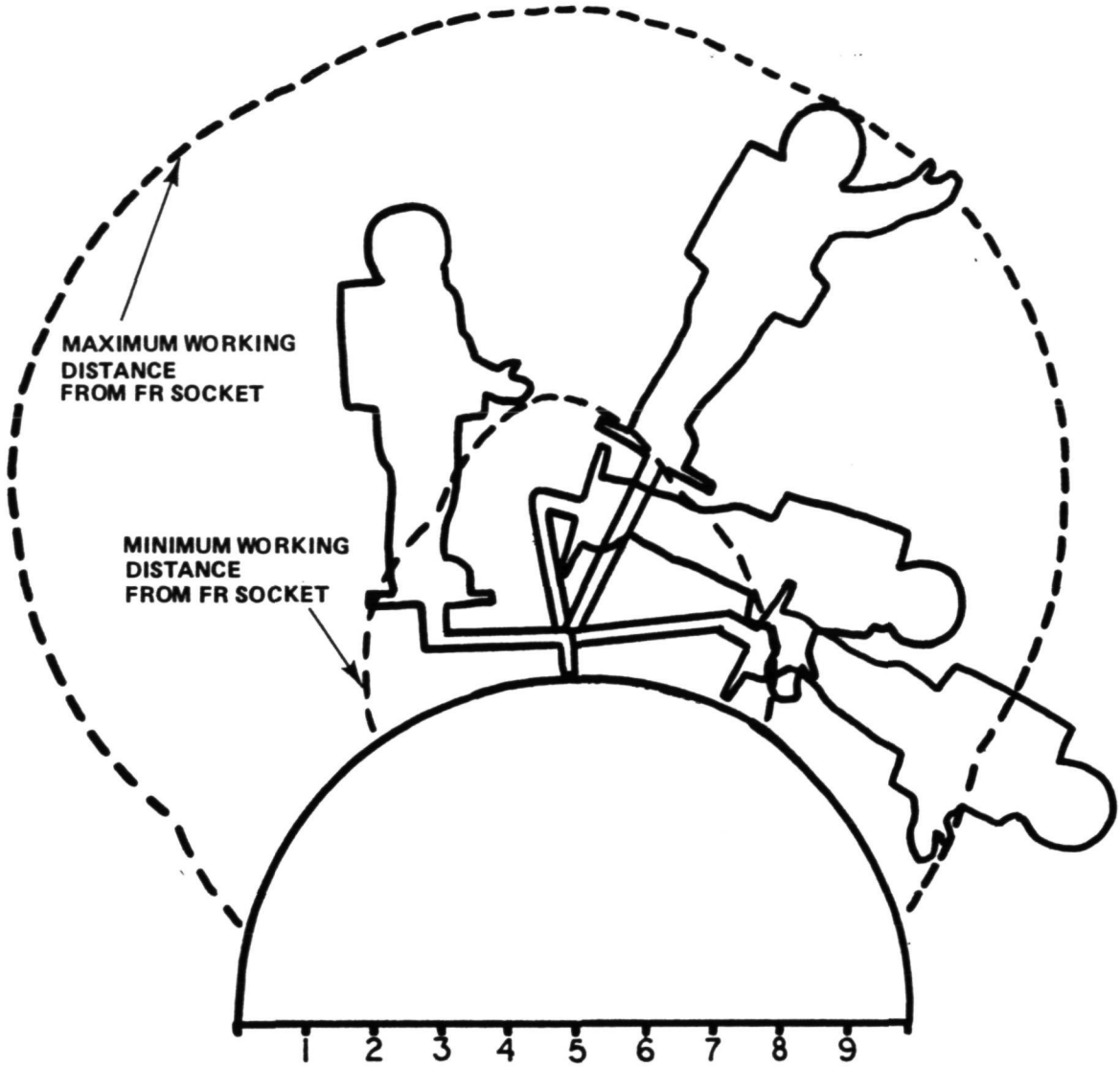


Indicates the area accessible to a crewmember from a single foot restraint socket on the surface of the ST when using the portable foot restraint. This figure is only a two-dimensional representation of a three-dimensional working envelope.

Figure 55. Working envelope using PFR.

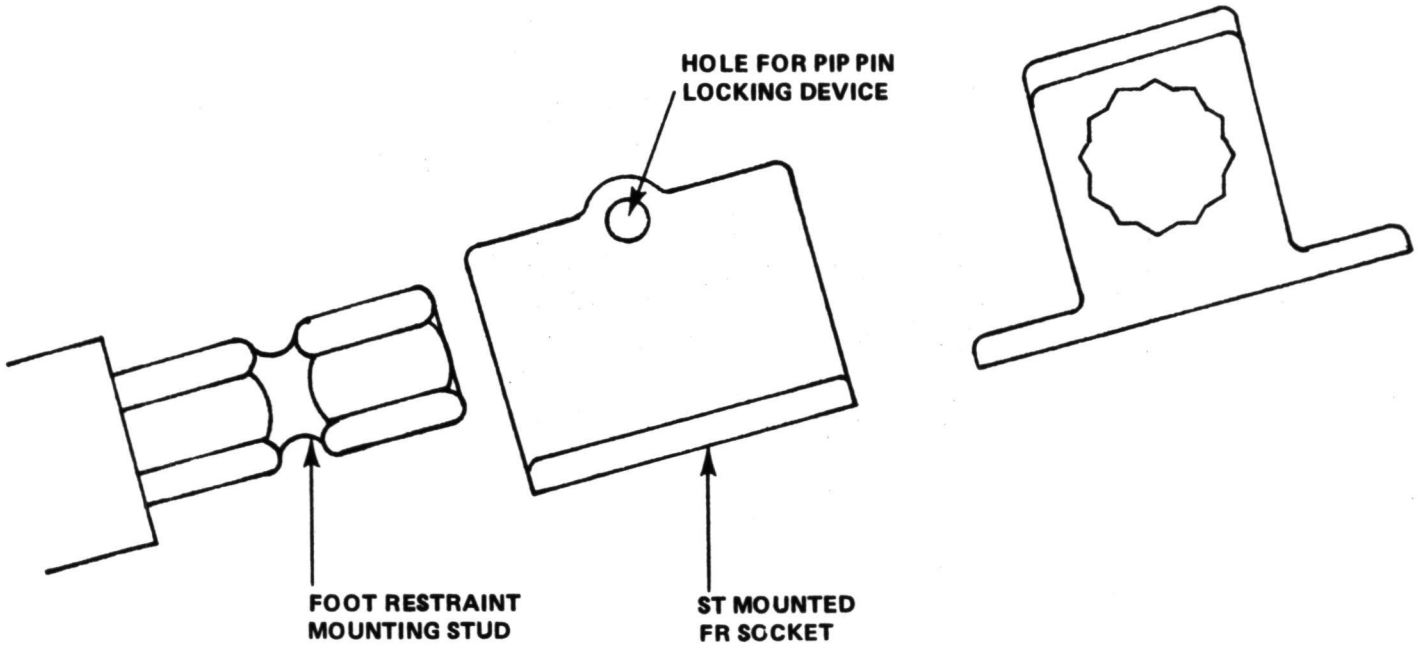


Figure 56. ST female hex foot restraint socket.

ORIGINAL PAGE IS
OF POOR QUALITY

ORIGINAL PAGE
BLACK AND WHITE PHOTOGRAPH

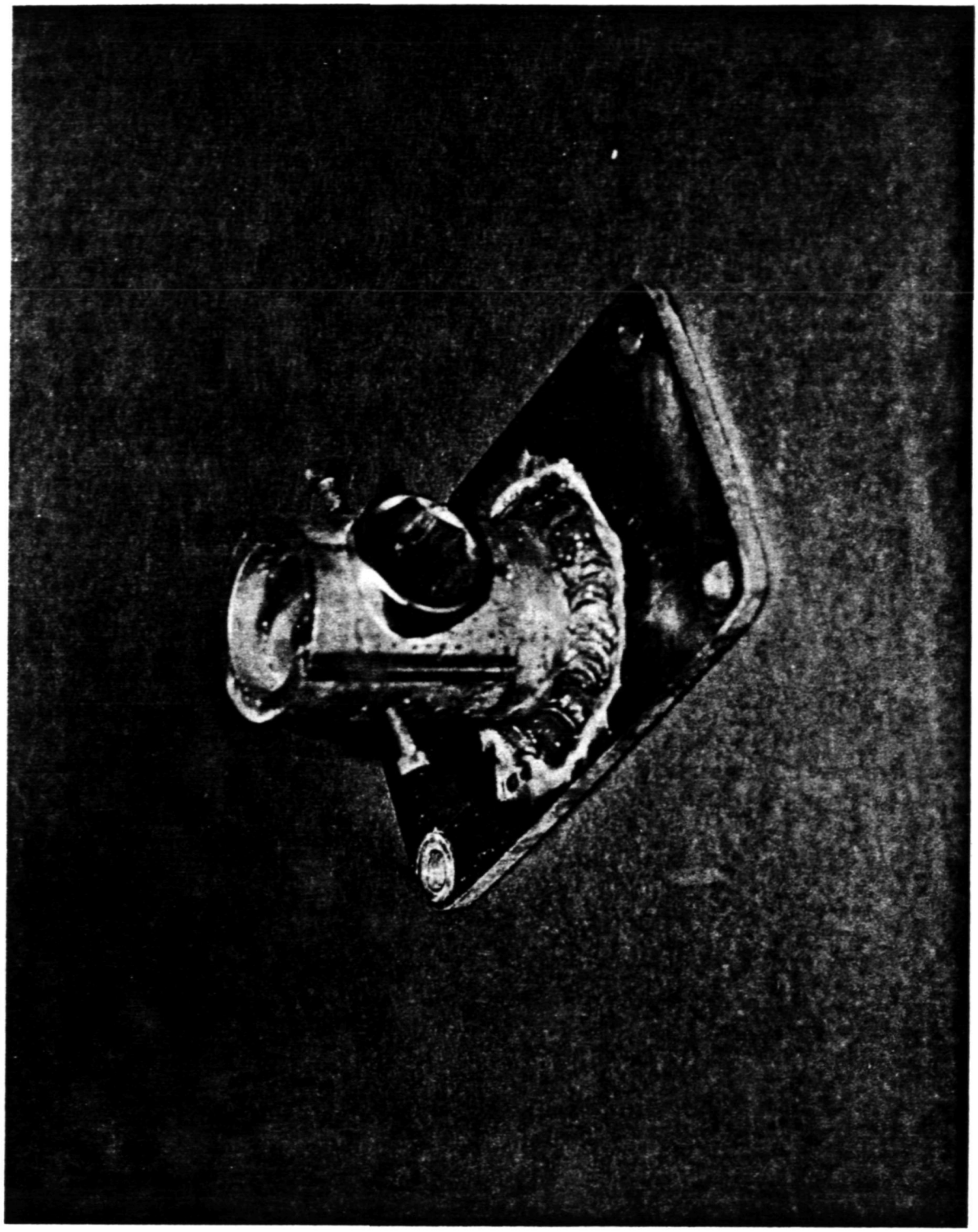

Figure 56. Female hex socket mockup.

ORIGINAL PAGE
BLACK AND WHITE PHOTOGRAPH

Figure 57. One FR socket location used to provide access to four separate maintenance locations (SSM-ES bay 2, batteries).

ORIGINAL PAGE
BLACK AND WHITE PHOTOGRAPH

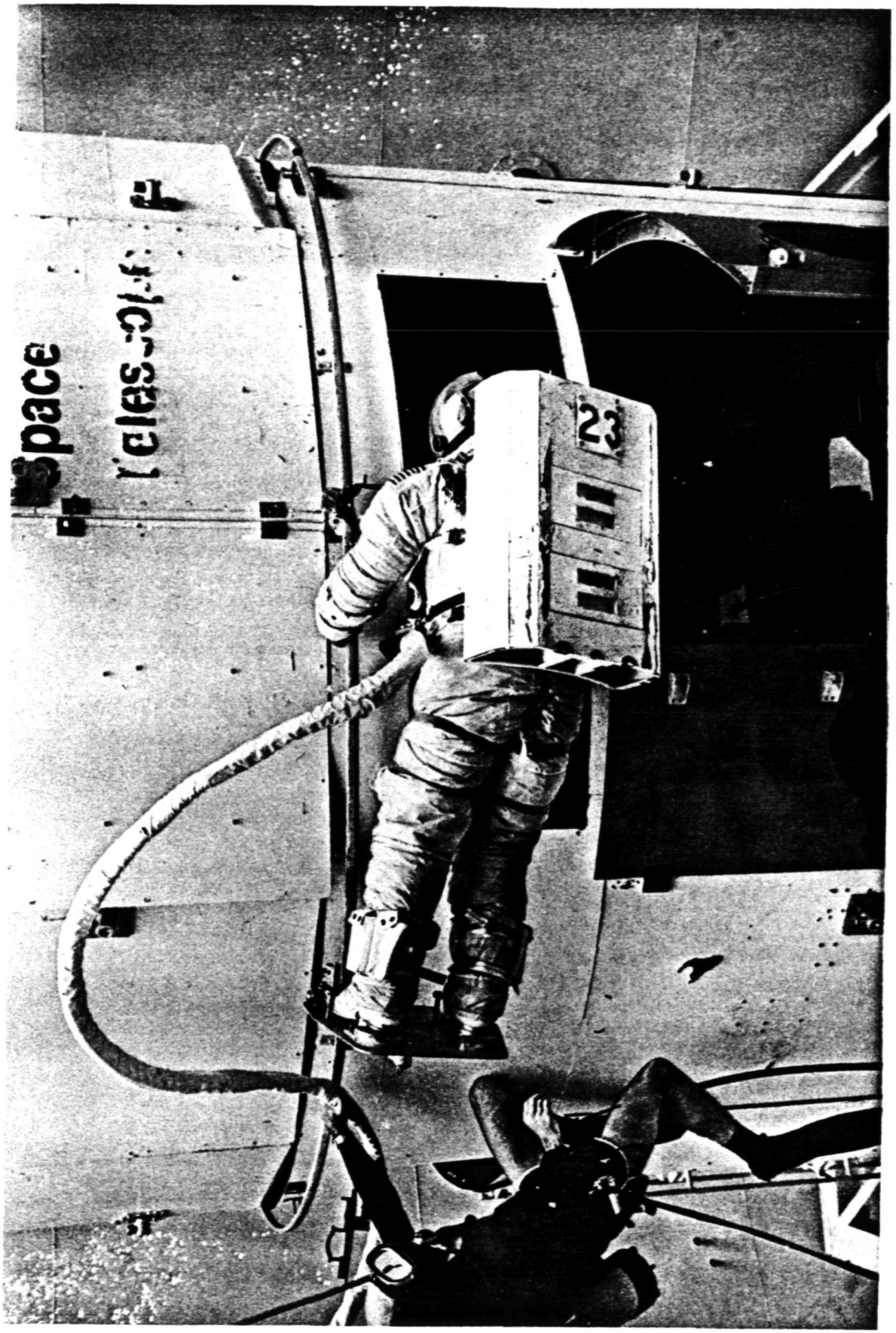


Figure 57. (Radial SI).

ORIGINAL PAGE
BLACK AND WHITE PHOTOGRAPH

Figure 57. (OTA-ES bay D, fine guidance electronics).

ORIGINAL PAGE
BLACK AND WHITE PHOTOGRAPH

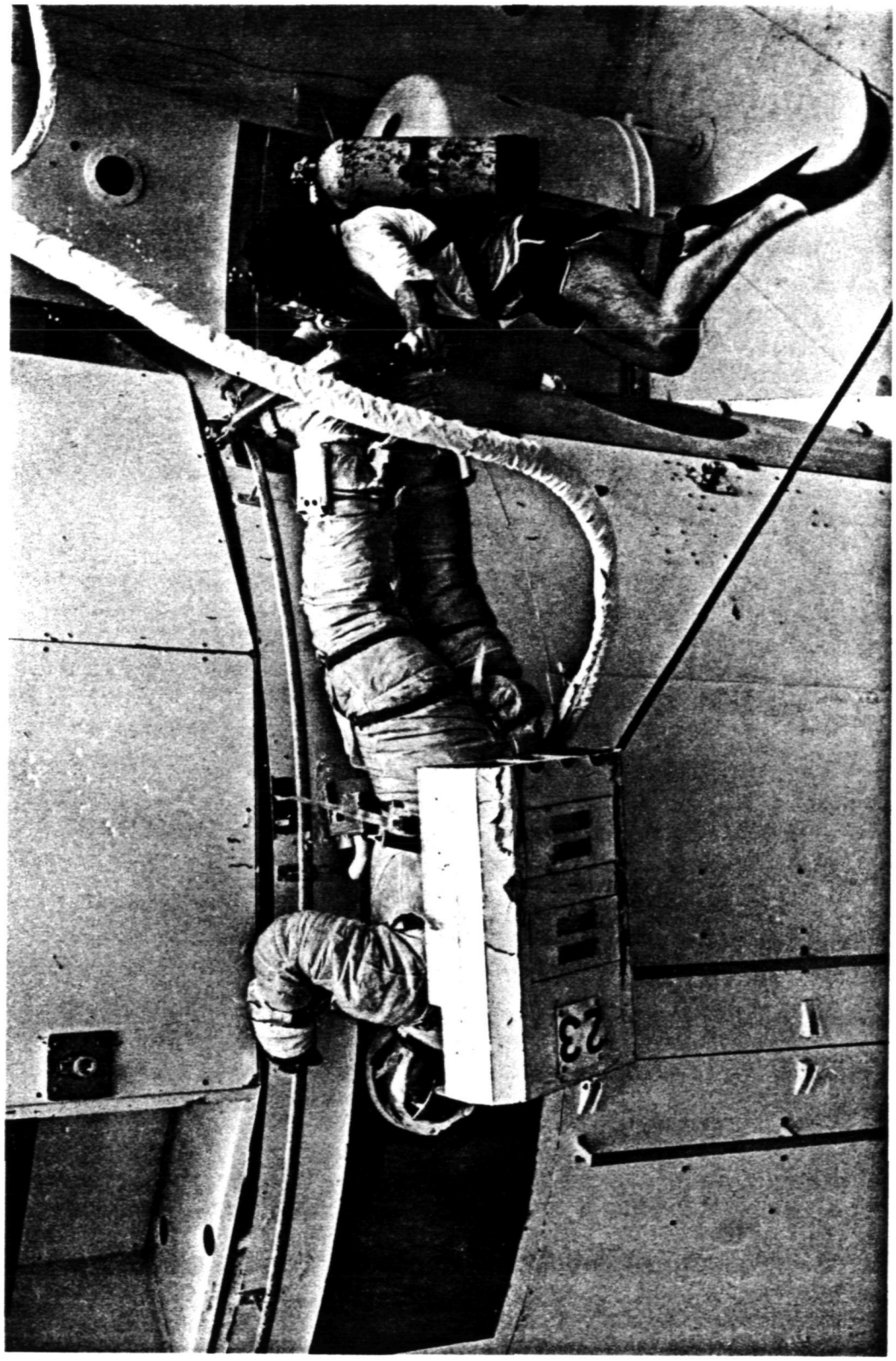

Figure 57. (-V2 axis fine guidance sensor).

ORIGINAL PAGE IS
OF POOR QUALITY

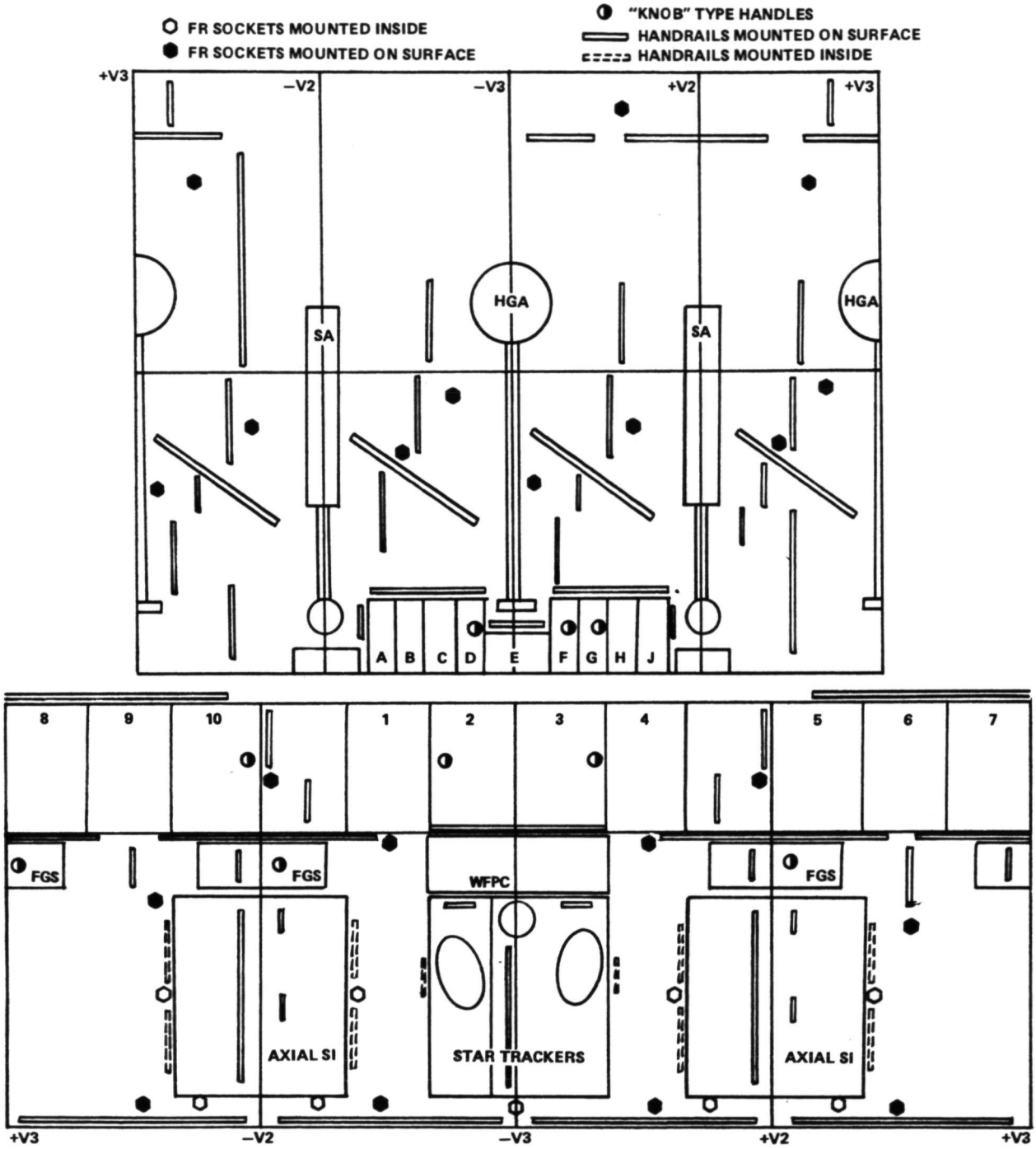


Figure 58. ST FR sockets and handrail locations.

ORIGINAL PAGE IS
OF POOR QUALITY

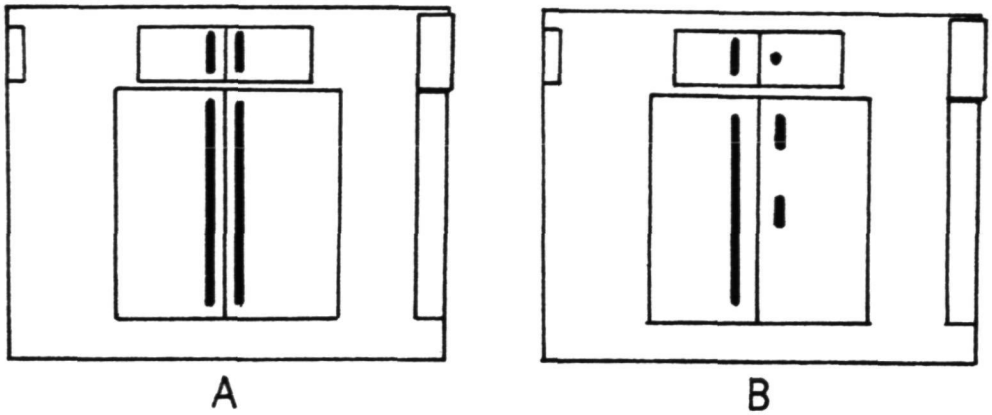


Figure 59. Aft shroud door handrail placements.

ORIGINAL PAGE
BLACK AND WHITE PHOTOGRAPH

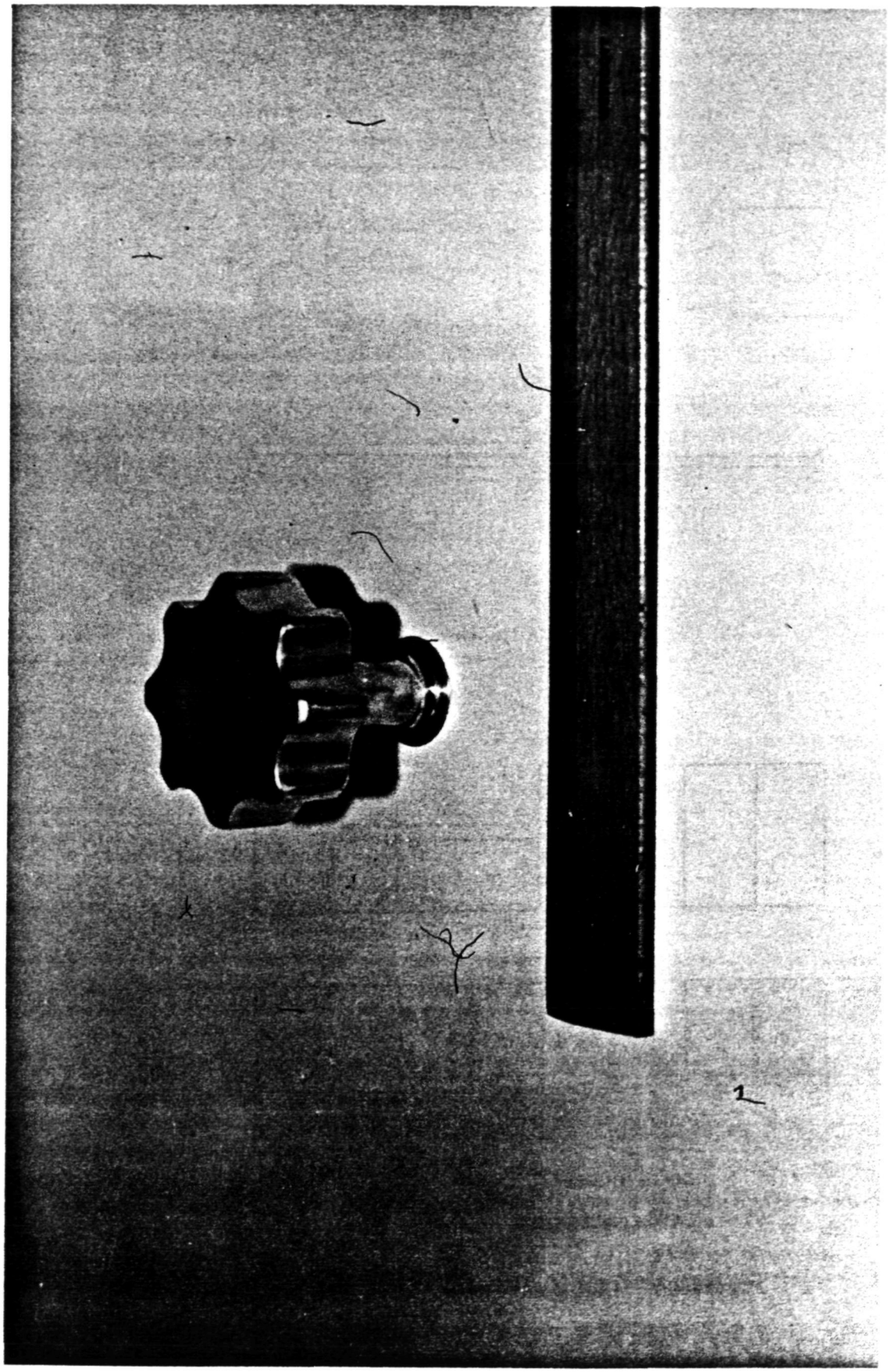

Figure 60. "Door knob" handhold.

ORIGINAL PAGE IS
OF POOR QUALITY

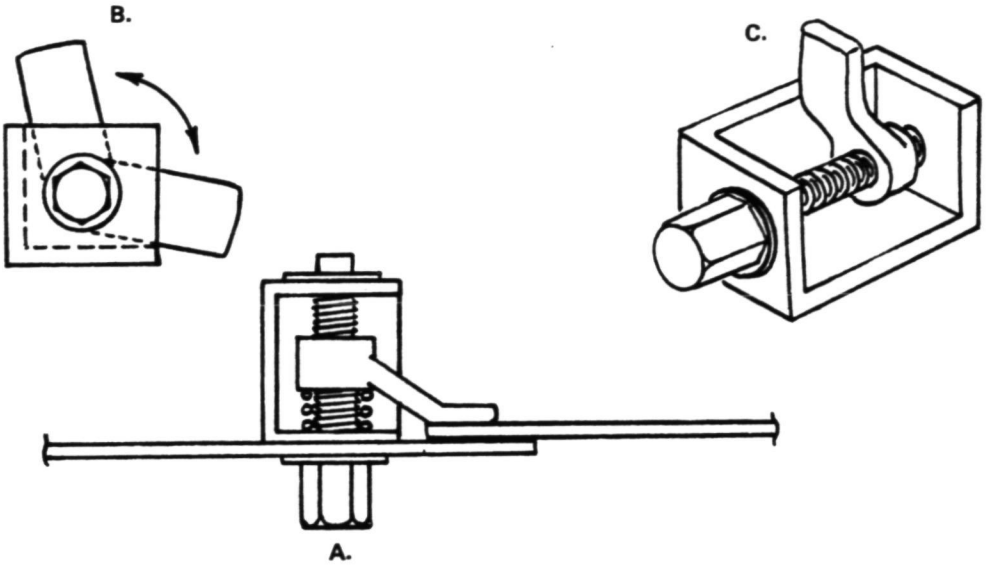


Figure 61. Adjustable grip latch.

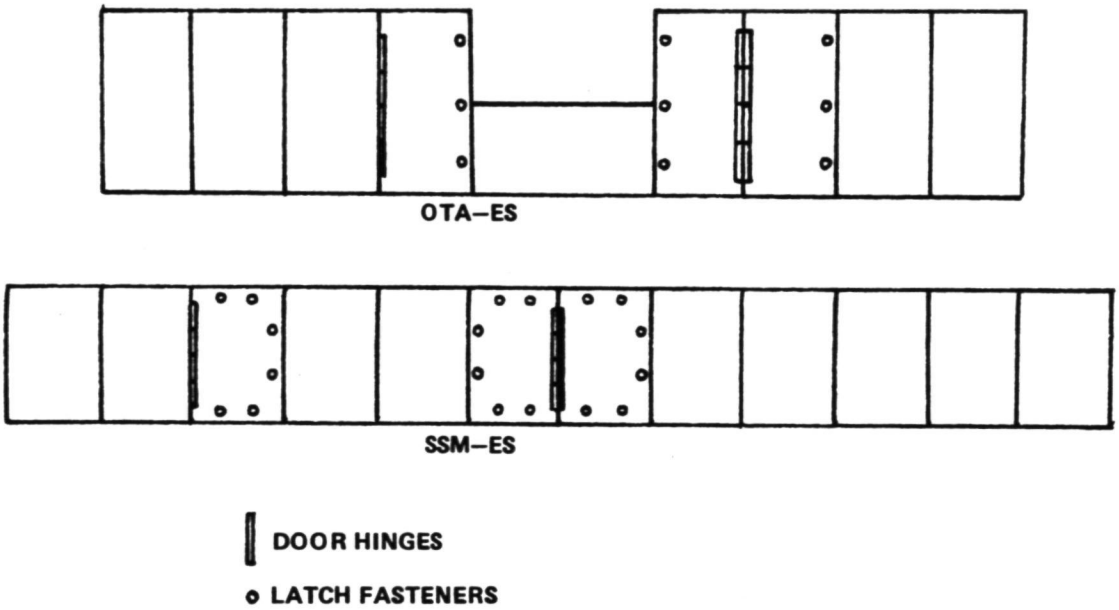


Figure 62. Bay door latch fastener locations.

ORIGINAL PAGE IS
OF POOR QUALITY

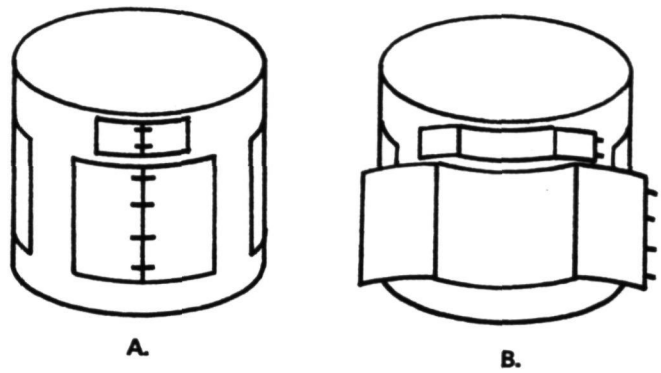


Figure 63. Aft shroud door latch locations.

ORIGINAL PAGE
BLACK AND WHITE PHOTOGRAPH

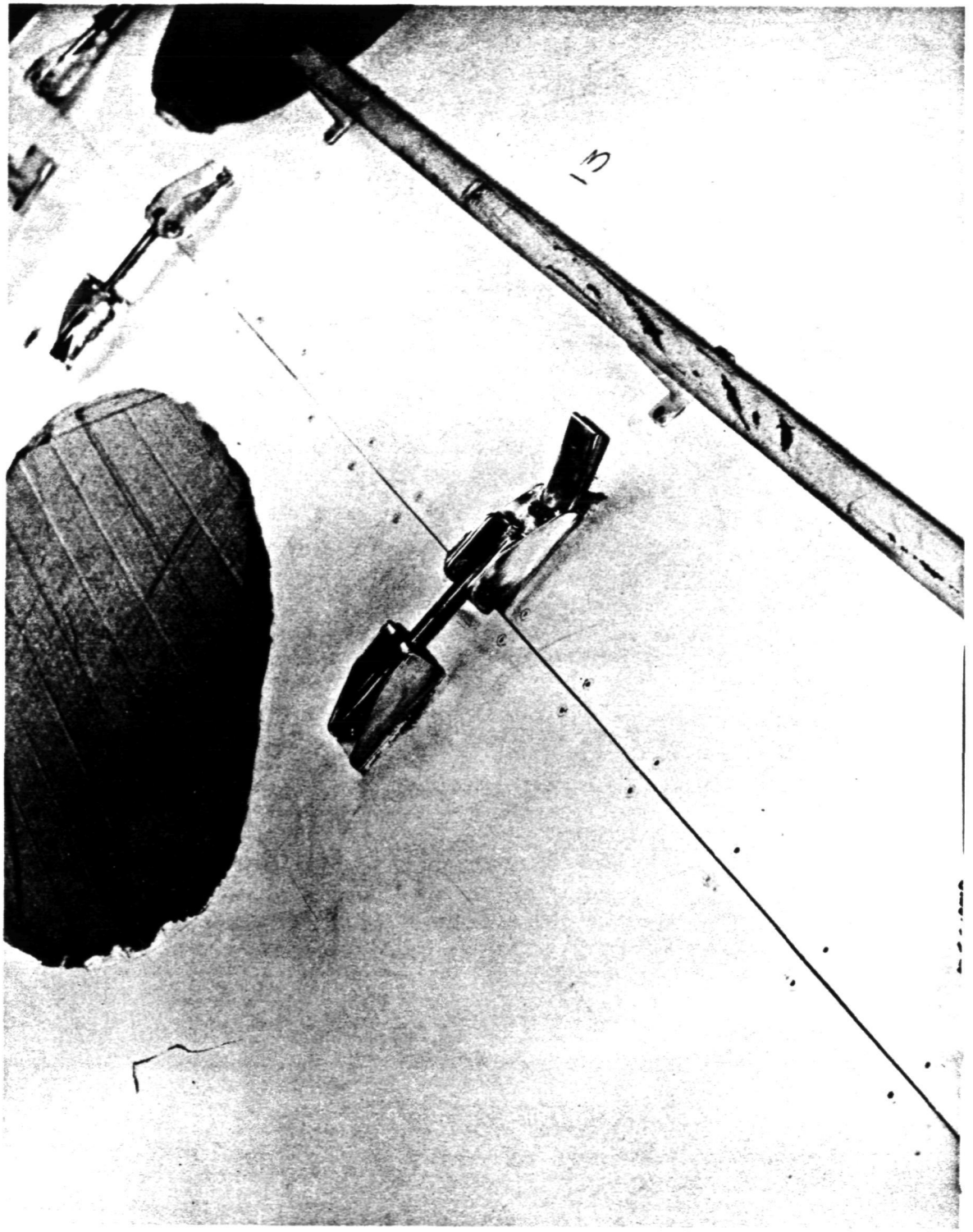

Figure 64. Aft shroud door latch with over center lock.

ORIGINAL PAGE IS
OF POOR QUALITY

Figure 65. ORU bolt.

ORIGINAL PAGE
BLACK AND WHITE PHOTOGRAPH

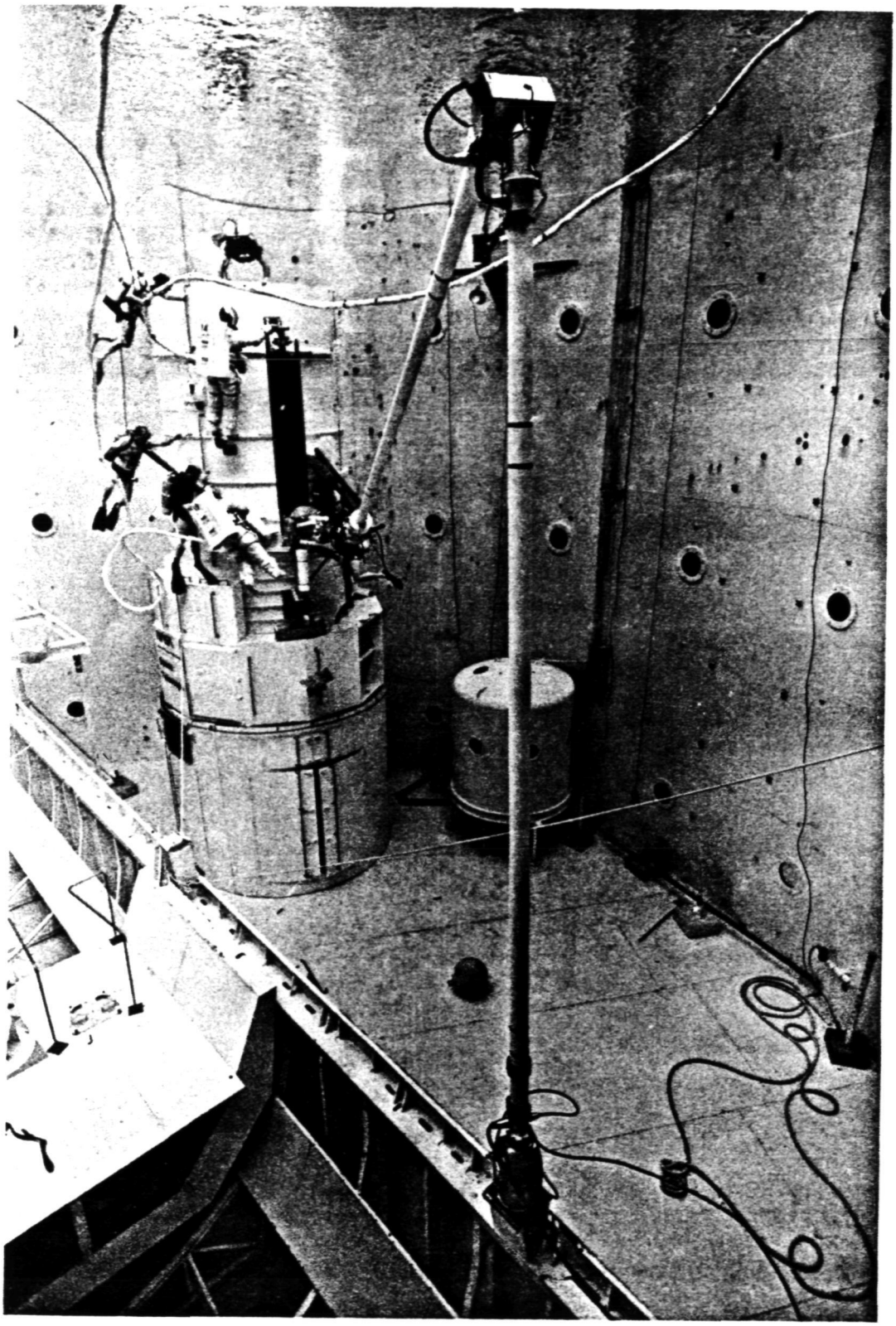

Figure 66. RMS mockup as used for SA jettison test.

ORIGINAL PAGE
BLACK AND WHITE PHOTOGRAPH

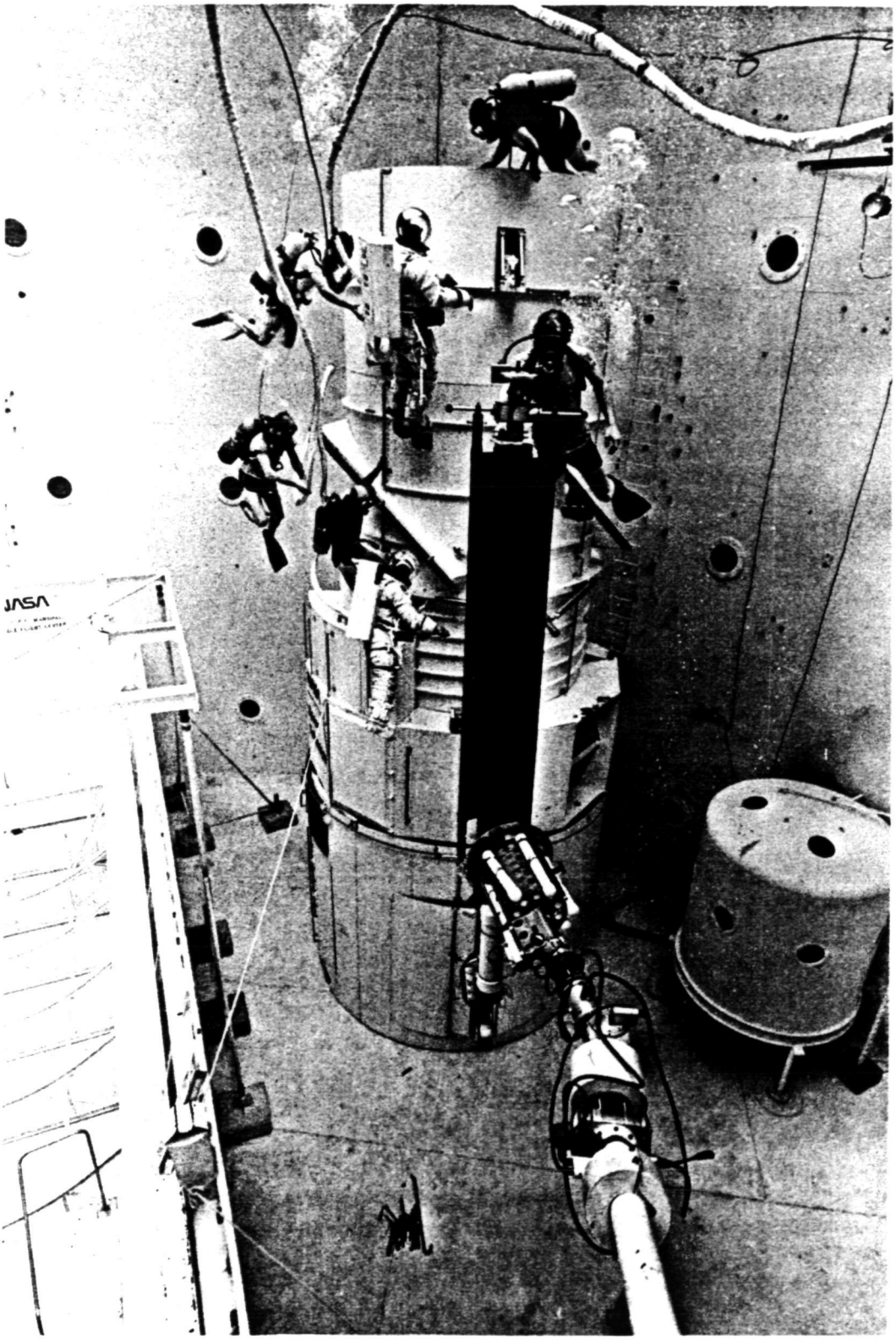


Figure 67. RMS end effector mockup as used in solar array jettison test.

ORIGINAL PAGE
BLACK AND WHITE PHOTOGRAPH

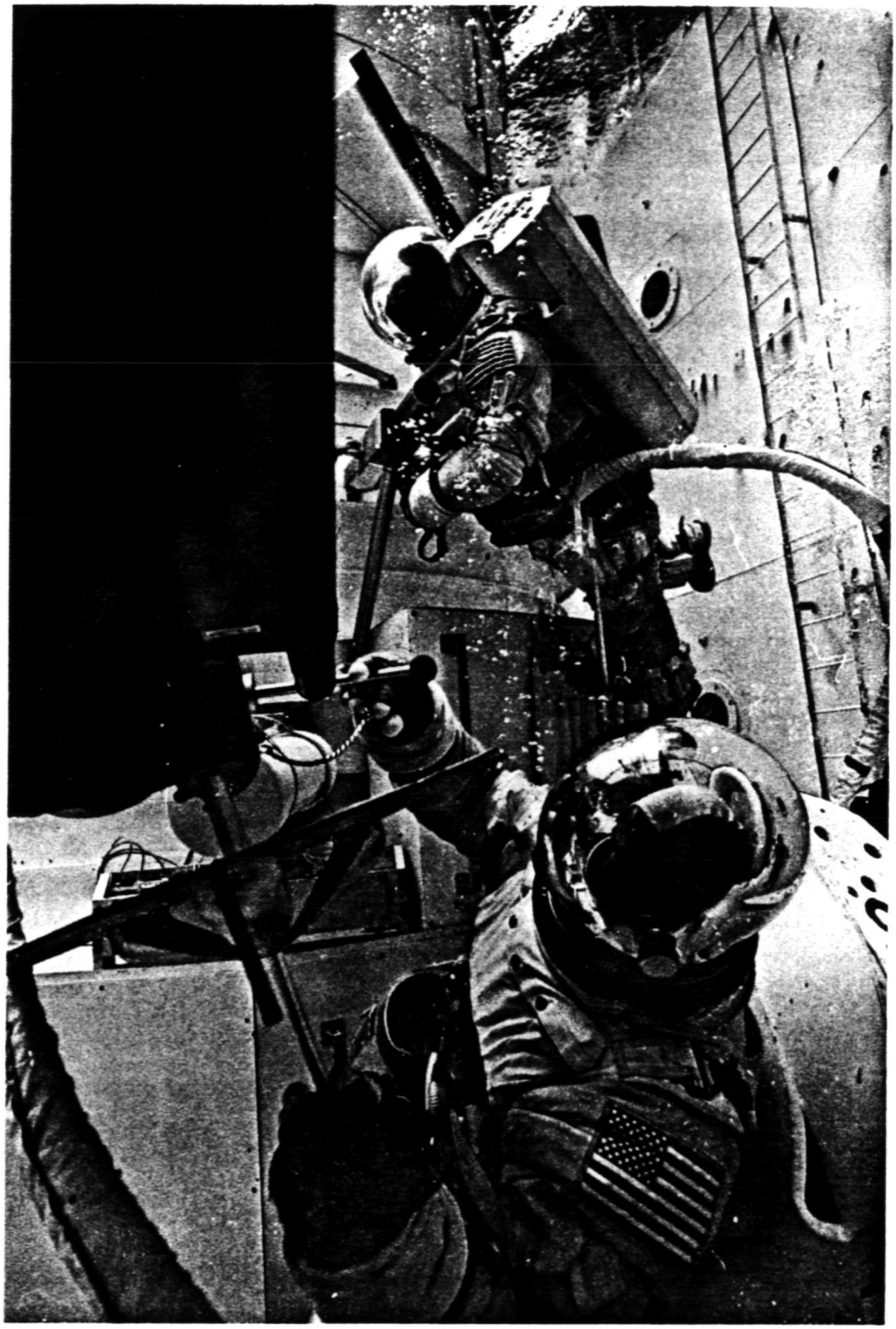

Figure 68. Crewman installing portable grapple fixture to solar array.

ORIGINAL PAGE
BLACK AND WHITE PHOTOGRAPH

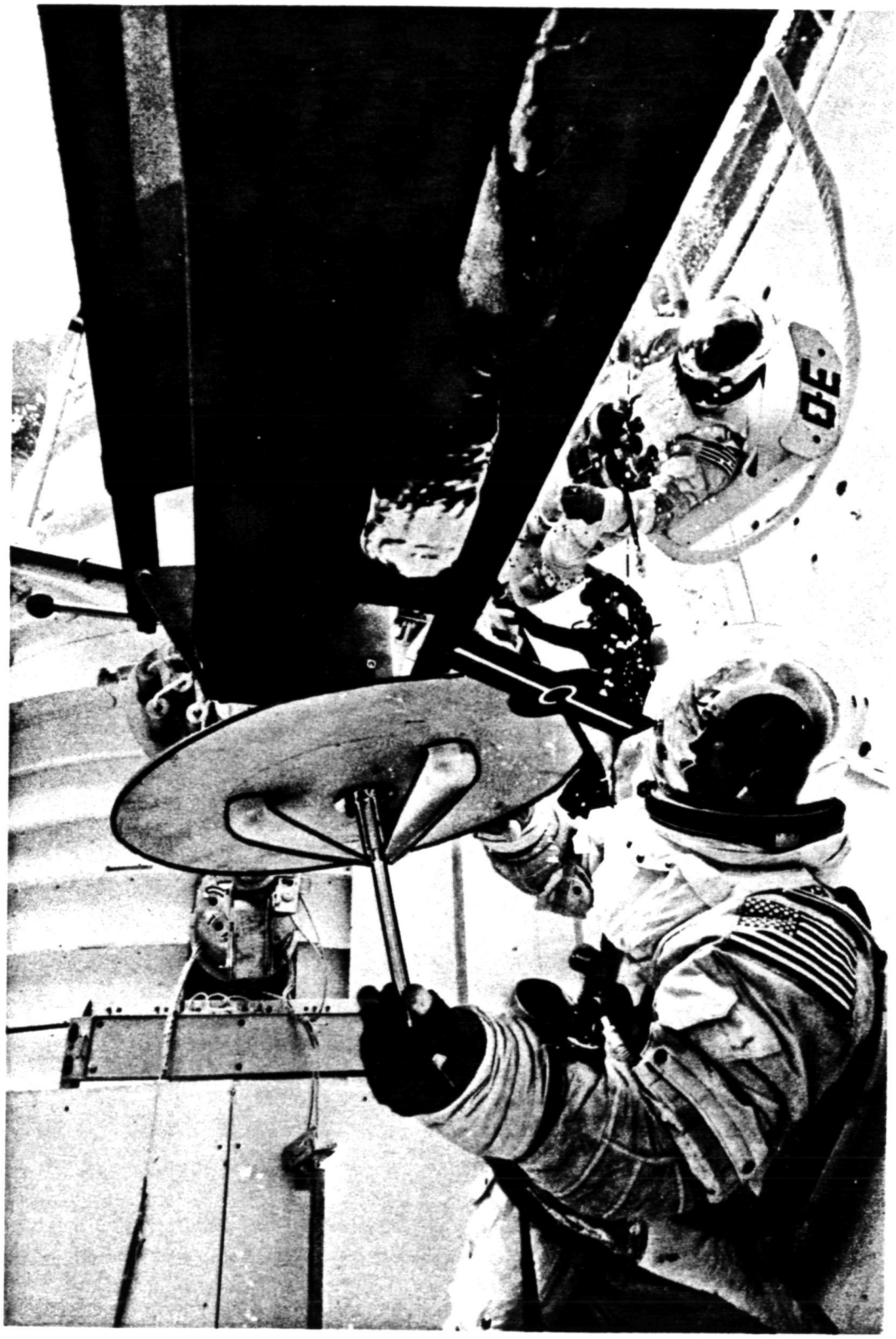

Figure 68. (Concluded)

ORIGINAL PAGE
BLACK AND WHITE PHOTOGRAPH

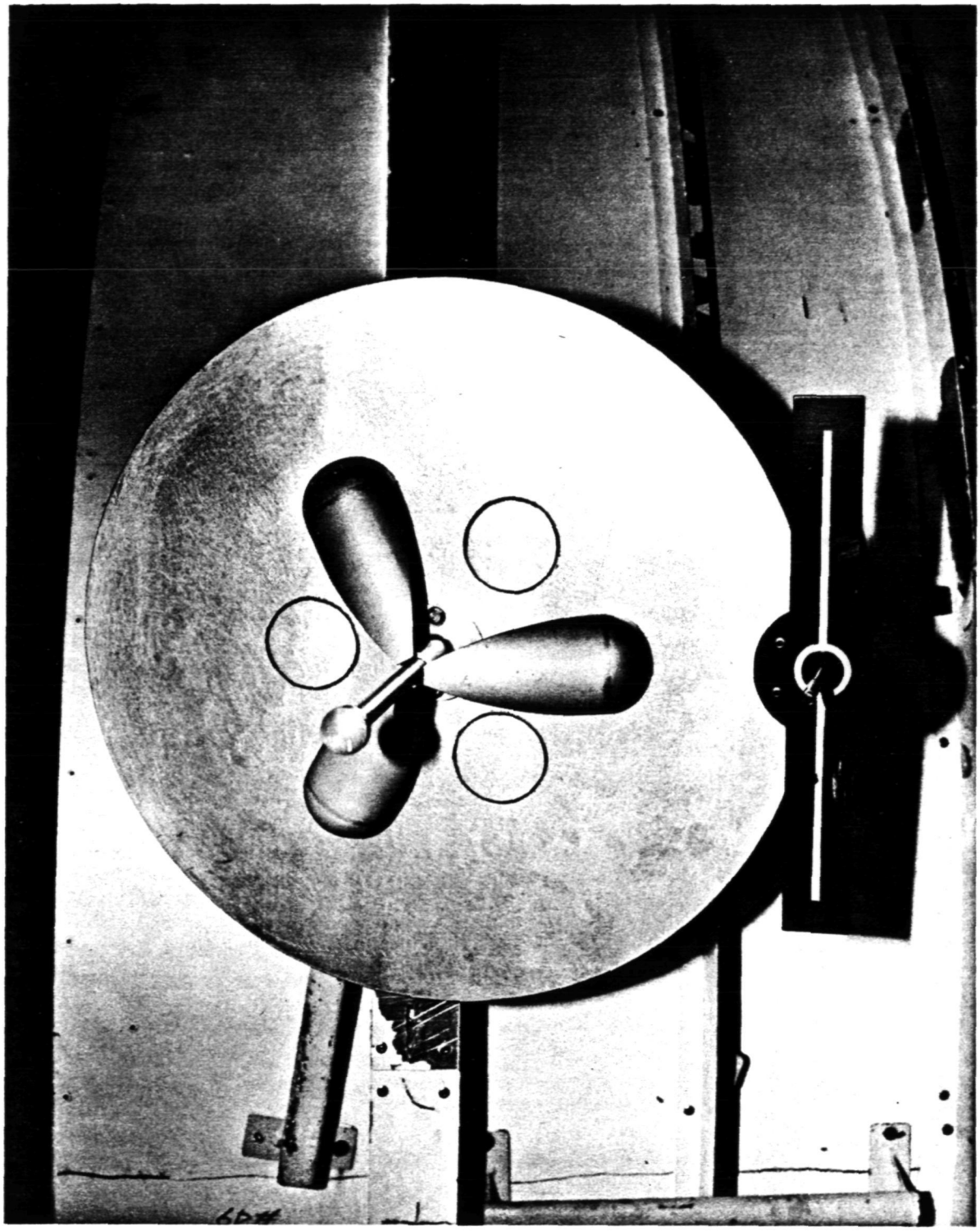

Figure 69. Portable grapple fixture with location of proposed holes.

ORIGINAL PAGE
BLACK AND WHITE PHOTOGRAPH

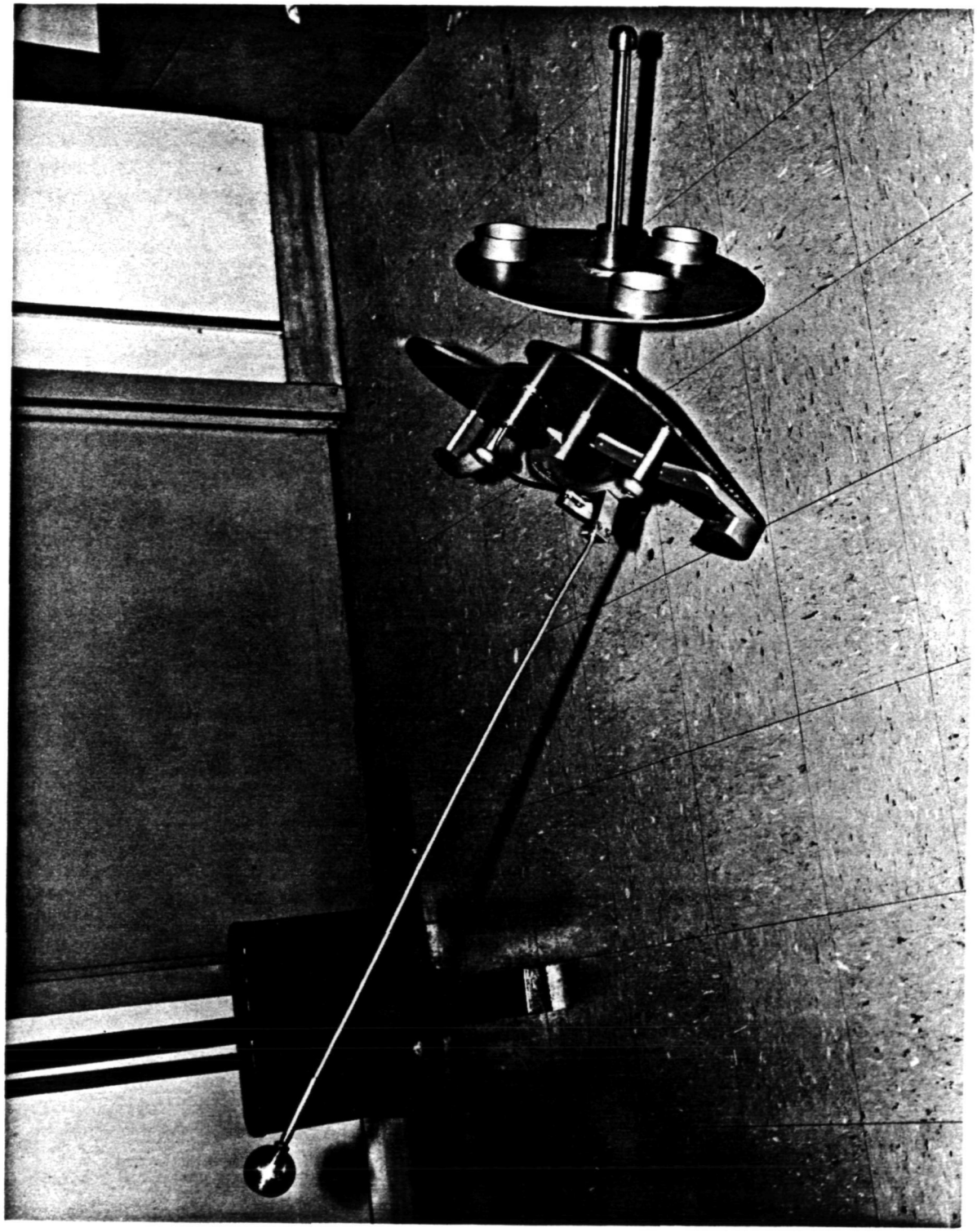

Figure 70. RMS mounted foot restraint.

ORIGINAL PAGE
BLACK AND WHITE PHOTOGRAPH

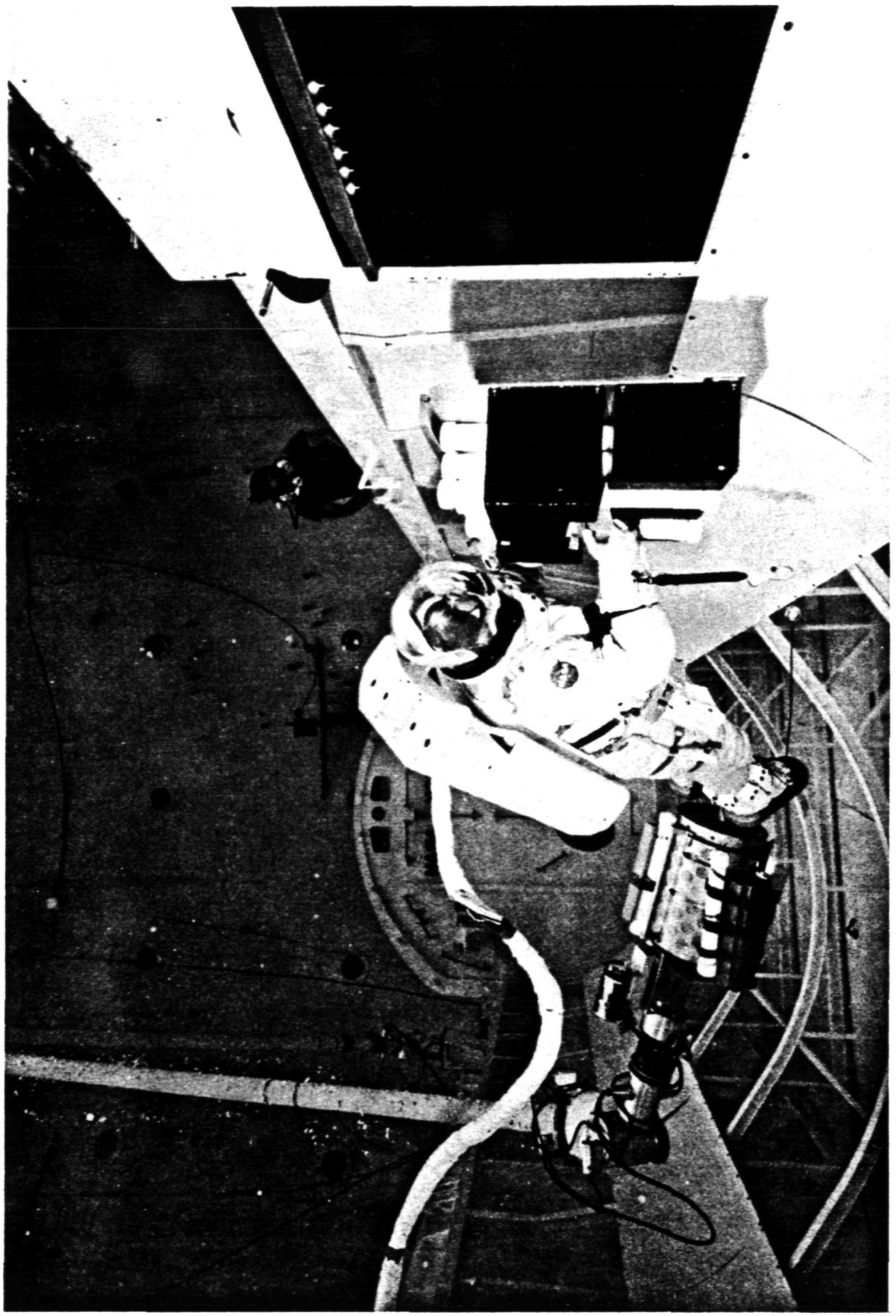

Figure 71. SI C&DH transfer using the RMS mounted foot restraint.

ORIGINAL PAGE
BLACK AND WHITE PHOTOGRAPH

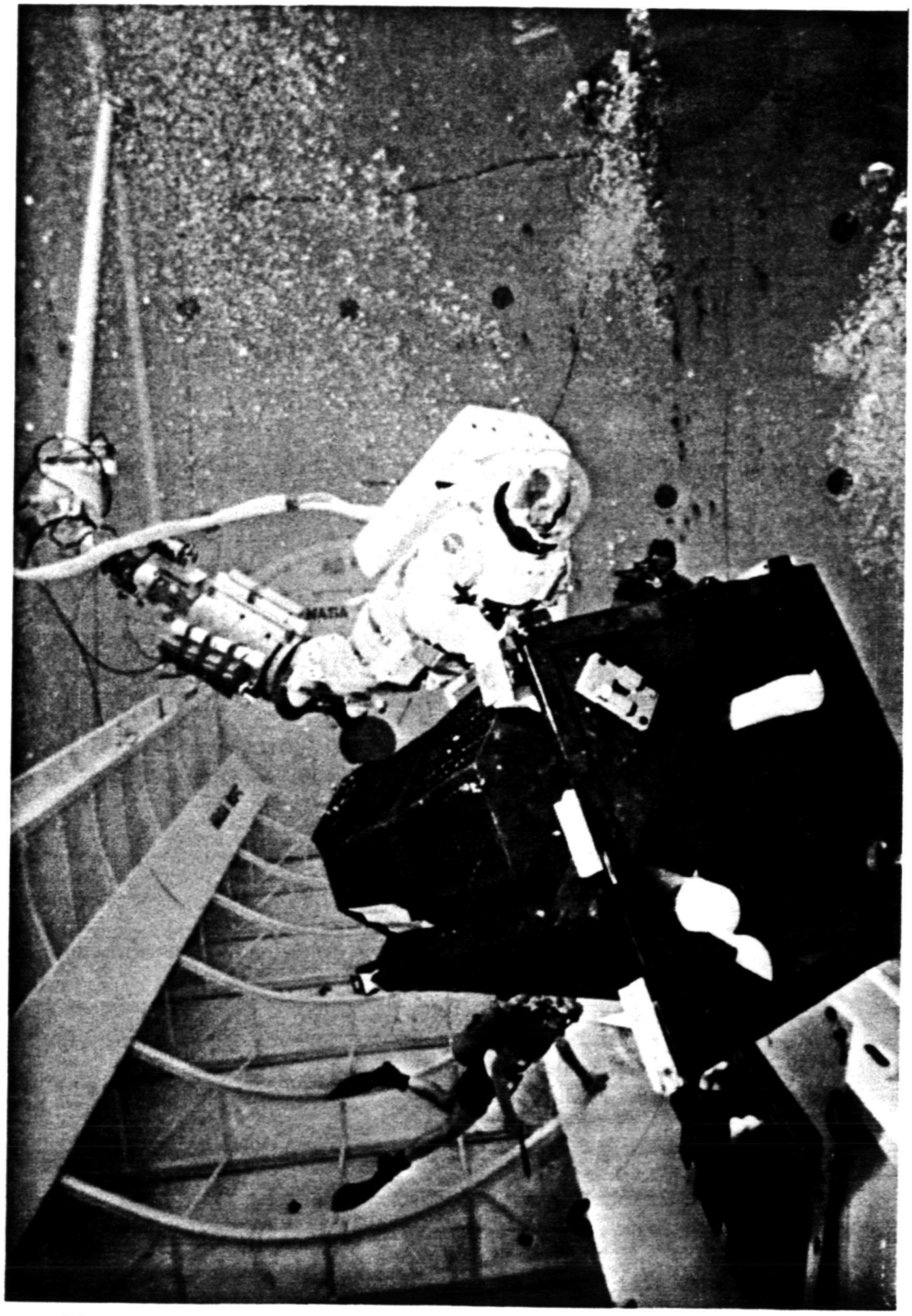

Figure 72. Axial SI transfer using RMS mounted foot restraint.

# APPROVAL

## SPACE TELESCOPE NEUTRAL BUOYANCY SIMULATIONS - THE FIRST TWO YEARS

By Fred G. Sanders

The information in this report has been reviewed for technical content. Review of any information concerning Department of Defense or nuclear energy activities or programs has been made by the MSFC Security Classification Officer. This report, in its entirety, has been determined to be unclassified.

GEORGE D. HOPSON
Director, Systems Analysis and
Integration Laboratory



☆U.S. GOVERNMENT PRINTING OFFICE 1982—546-071/8