HOLOGRAPHIC FLOW VISUALIZATION - STATE-OF-THE-ART OVERVIEW

J. D. Trolinger

Spectron Development Laboratories, Inc.
Costa Mesa, California

STATE-OF-THE-ART HOLOGRAPHY TECHNIQUES/FRONTIERS

- TOMOGRAPHY
- AUTOMATED DATA REDUCTION
- ON-LINE INTERFEROGRAM PRODUCTION
- HETERODYNE HOLOGRAPHIC INTERFEROMETRY
- CINE HOLOGRAPHY

APPROACHES TO AUTOMATED INTERFEROGRAM DATA REDUCTION

- (SEMI-AUTOMATIC) USE GRAPHIC TABLET TO DIGITIZE FRINGE POSITION
- USE IMAGE ANALYZING COMPUTER TO DIGITIZE FRINGES
- USE MOVING FRINGES WITH PHASE DETECTING ARRAY

LABORATORIES USING LARGE-SCALE HOLOGRAPHIC FLOW VISUALIZATION

NASA

- AMES
- LANGLEY
- LEWIS

US AIR FORCE

- AEDC
- KAFB/AFWL
- WPAFB/FDL

US ARMY

- MOFFET FIELD
- PICATINNY

US NAVY

- USN PGS
- USN SURFACE WEAPONS

INDUSTRIAL

- BOEING COMMERCIAL AIRPLANE CO.
- LOCKHEED
- ROLLS ROYCE
- SDL
- TRW

RECORDING MATERIALS FOR FLOW VISUALIZATION HOLOGRAPHY

TYPES	MANUFACTURER	RESOLUTION LINES/m	EXPOSURE REQUIRED ERGS/CM^2
PHOTOPLATES	AGFA 8E75, 10E75	2000 - 3000	50 - 200
PHOTO FILMS	8E56, 10E56		
THERMOPLASTIC FILMS	ROTTENKOLBER	1000 - 1500	~200
THERMOPLASTIC PLATES	HONEYWELL/ NEWPORT	1000 - 1500	~200

PULSED LASERS FOR FLOW VISUALIZATION HOLOGRAPHY

TYPE	TEM_{00} Q-SWITCHED ENERGY, MJ.	MULTIPULSE NUMBER	PULSE WIDTH SEC	PULSE SEPARATIONS, SEC	COHERENCE LENGTH	REP RATE, SEC^{-1}
RUBY .694 MICRONS	50 500 4000	2,3,4	10^{-8}	1 - 1000	1m	1
YAG .53 MICRONS	25 200 700	2	10^{-8}	1 - 100	1m	30

DOUBLE REFERENCE WAVE HOLOGRAPHIC INTERFEROMETRY

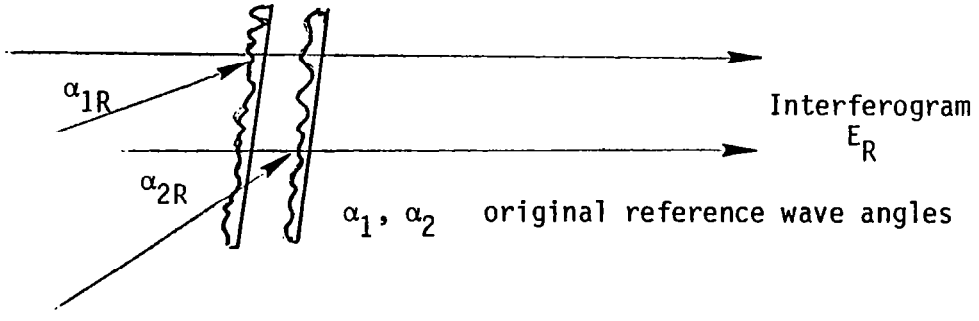

$$E_R = A\cos[kx(\sin\alpha_1 - \sin\alpha_{1R} + \sin\alpha_{\alpha 2} - \sin\alpha_{2R}) + \Delta\phi(x) - \Delta\phi_0 - \Delta wt]$$

MULTI-PASS HOLOGRAPHIC FLOW VISUALIZATION

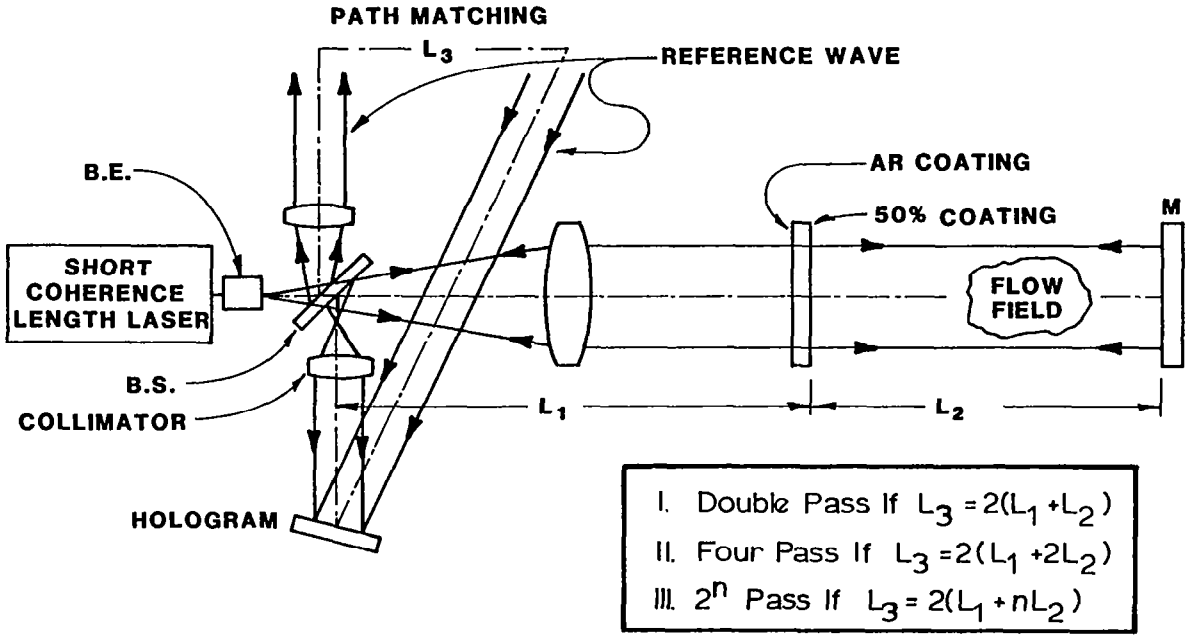

ELECTRONIC FLOW VISUALIZATION AND MEASUREMENT

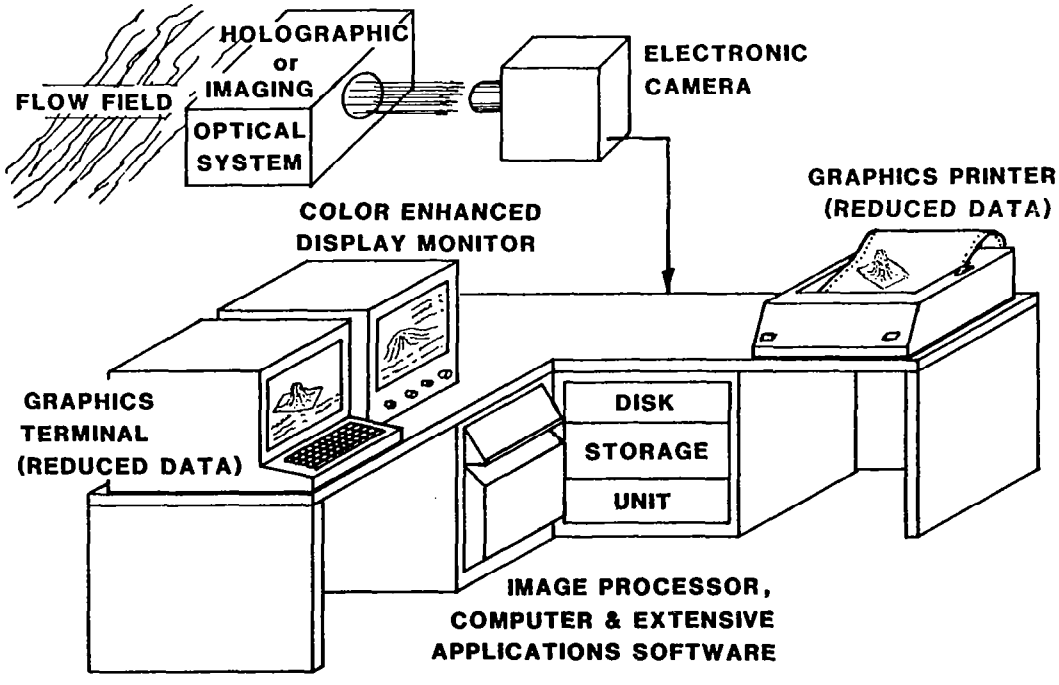

HOLOGRAPHIC INTERFEROMETRY WITH MULTIPLE RECORDINGS

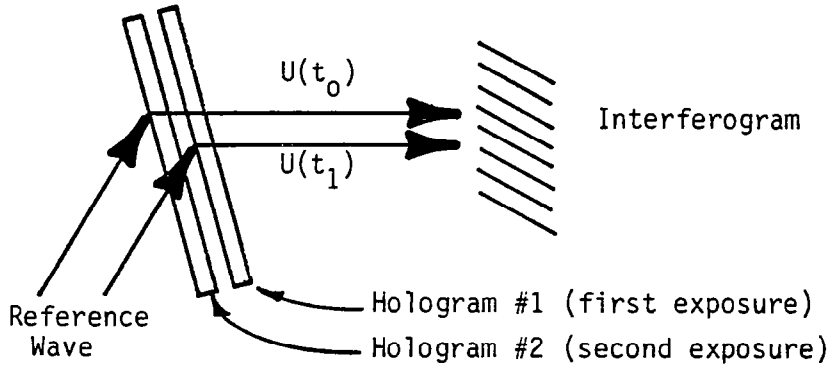

A. DOUBLE PLATE HOLOGRAPHIC INTERFEROMETRY

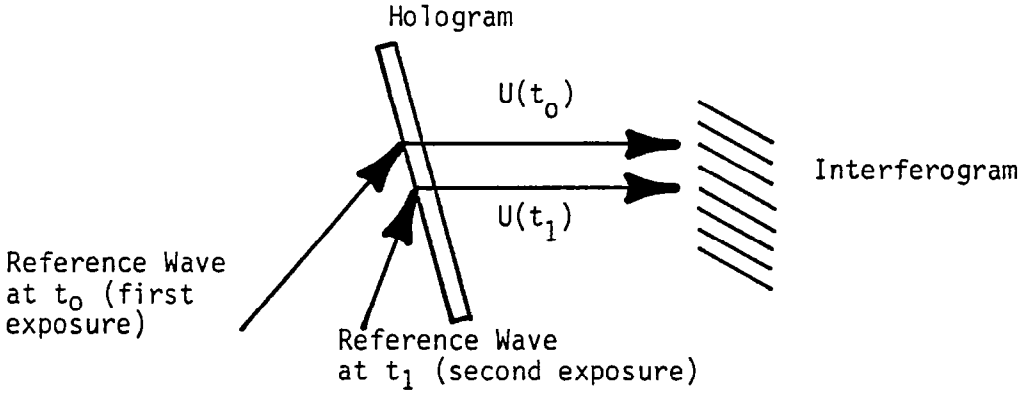

B. DOUBLE REFERENCE WAVE HOLOGRAPHIC INTERFEROMETRY

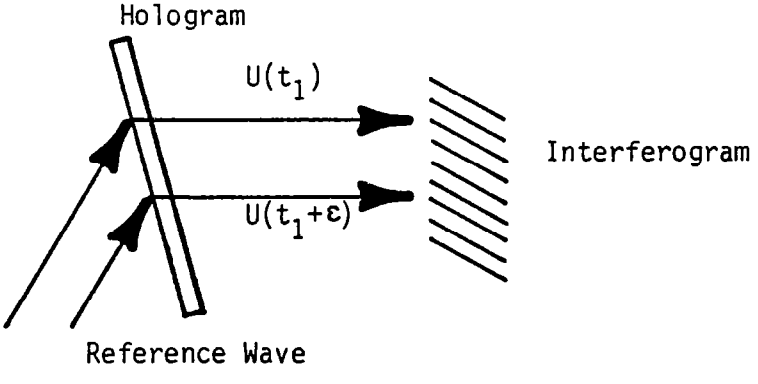

C. DOUBLE PULSED HOLOGRAPHIC INTERFEROMETRY

HOLOGRAPHIC INTERFEROMETRY WITH SINGLY EXPOSED HOLOGRAMS

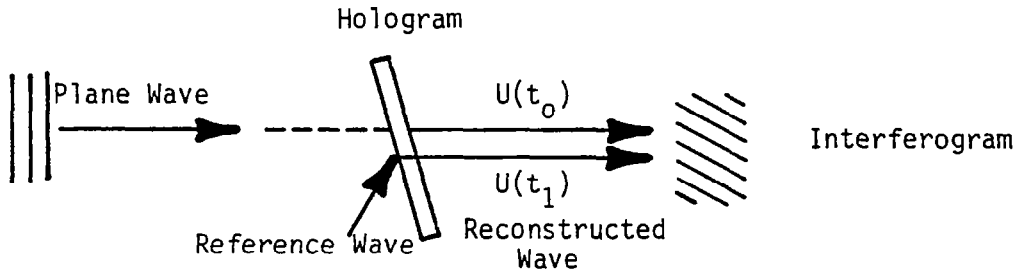

A. HOLOGRAPHIC INTERFEROMETRY WITH A SINGLE HOLOGRAM

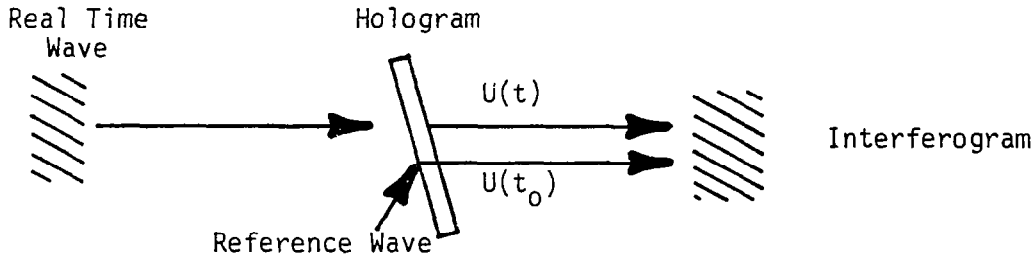

B. REAL TIME HOLOGRAPHIC INTERFEROMETRY

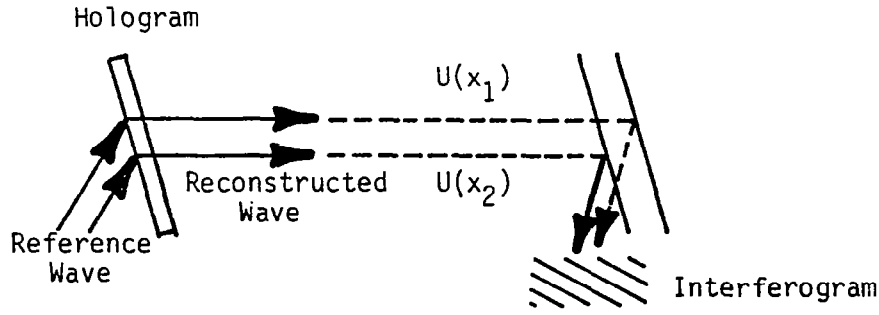

C. HOLOGRAPHIC WAVE SHEARING INTERFEROMETRY

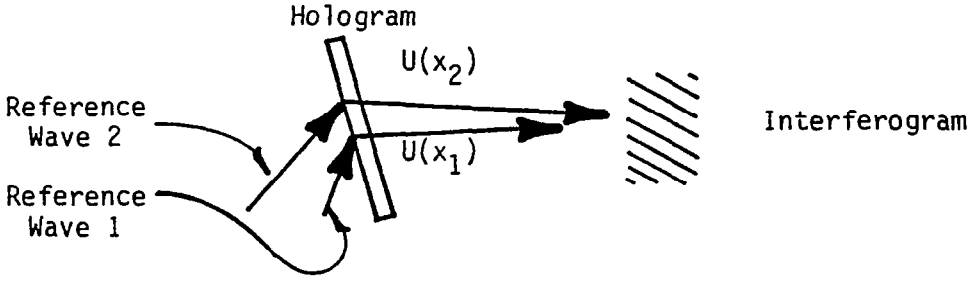

D. TWO REFERENCE WAVE SHEARING

CONCEPTUAL "STATE-OF-THE-ART" HOLOGRAPHIC FLOW VISUALIZATION SYSTEM

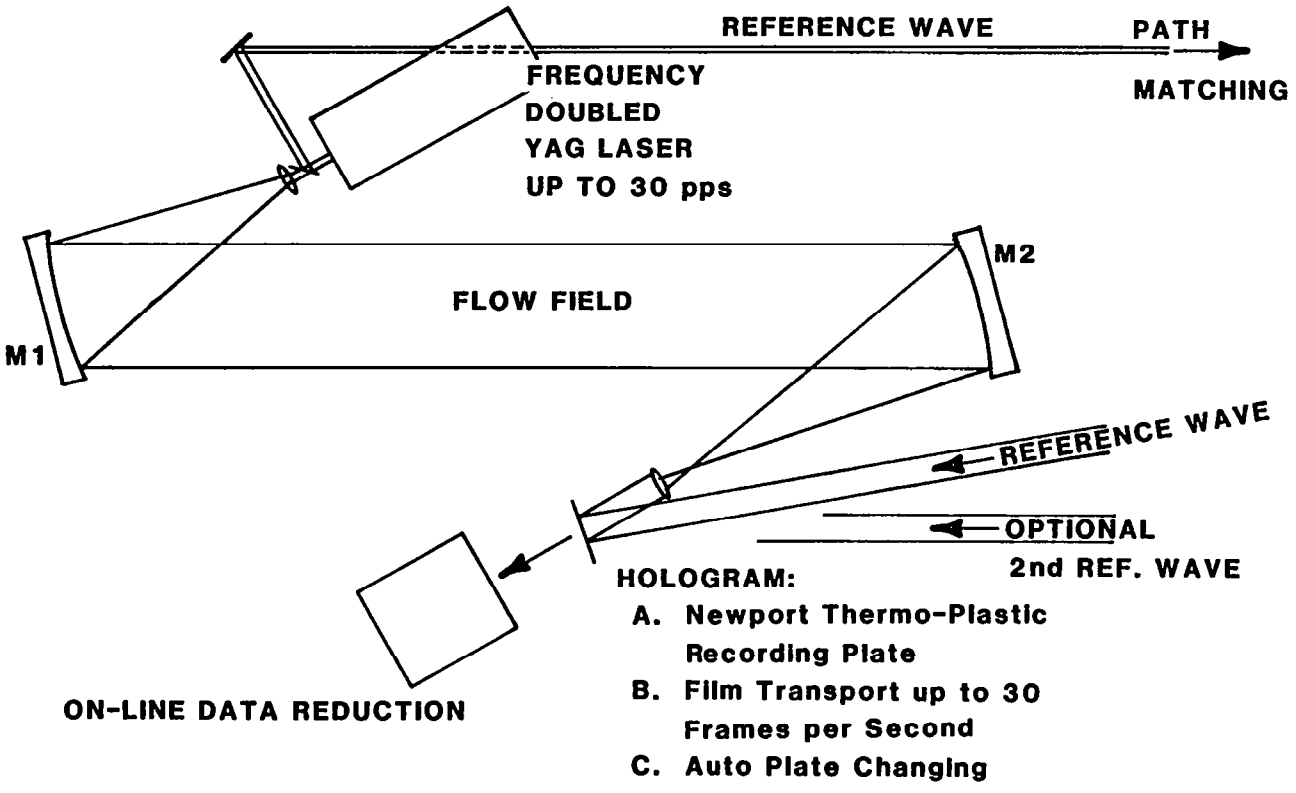

LARGE AREA FLOW VISUALIZATION

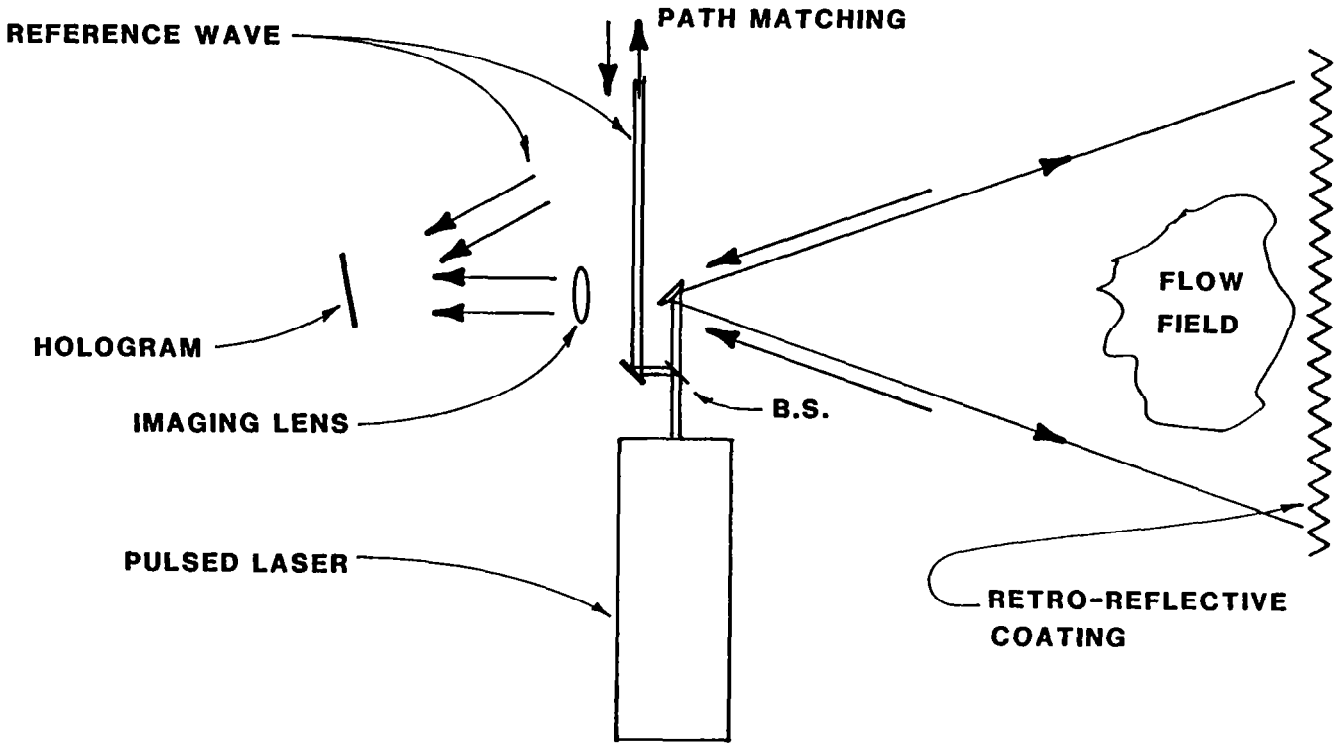
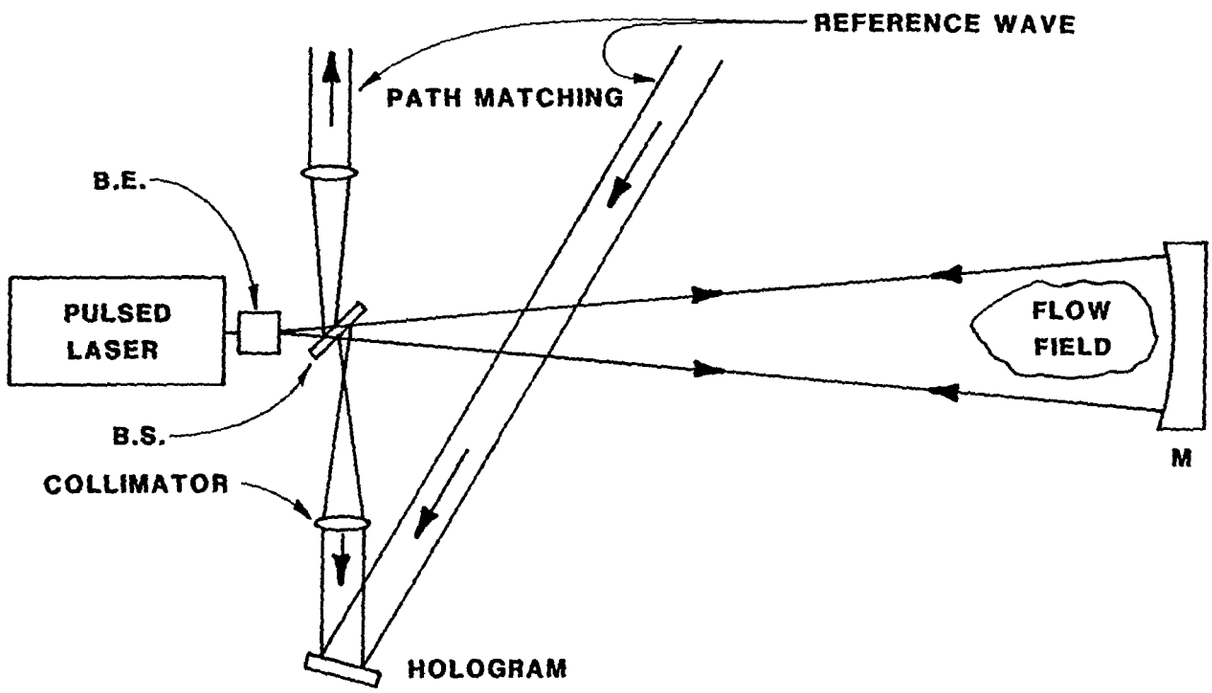
DOUBLE PASS HOLOGRAPHIC FLOW VISUALIZATION