PRECEDING PAGE BLANK NOT FILMED

N82 33322

INCREASED ATMOSPHERIC CARBON DIOXIDE AND CLIMATE FEEDBACK MECHANISMS

Robert D. Cess
Laboratory for Planetary Atmospheres Research
State University of New York
Stony Brook, New York

INTRODUCTION

As a consequence of fossil fuel burning, the atmospheric concentration of carbon dioxide has increased from 314 ppm in 1958, when detailed measurements of this quantity began, to a present value of 335 ppm; and it is estimated that during the next century, the CO_2 concentration will double relative to its assumed preindustrial value of 290 ppm. Since CO_2 is an infrared-active gas, increases in its atmospheric concentration would lead to a larger infrared opacity for the atmosphere which, by normal logic, would result in a warmer Earth. A number of modeling endeavors suggest a 2° to $4^{\circ}C$ increase in global mean surface temperature with doubling of the CO_2 concentration.

But such estimates of CO_2-induced warming are highly uncertain because of a lack of knowledge of climate feedback mechanisms. Interactive influences upon the solar and infrared opacities of the Earth-atmosphere system can either amplify or damp a climate-forcing mechanism such as increasing CO_2. This paper discusses a number of such climate feedback mechanisms.

CLIMATE SENSITIVITY

A convenient measure of the sensitivity of the global climate, for the purpose of feedback comparisons, is the sensitivity parameter $\beta = S_o(dT_S/dS)$ as originally introduced by Schneider and Mass (1975), where T_S is the global mean surface temperature and S the solar constant, with S_o denoting the current solar constant. Thus β is a measure of the sensitivity of global climate to a change in solar constant. From a global energy balance,

$$\frac{S}{4}(1 - \alpha_p) = F \tag{1}$$

where α_p and F denote the global albedo and outgoing infrared flux, respectively. It thus follows from equation (1) that

$$\beta = S_o \frac{dT_S}{dS} = \frac{F}{dF/dT_S + (S_o/4)(d\alpha_p/dT_S)} \tag{2}$$

PAGE 28 INTENTIONALLY BLANK

The absence of climate-induced changes in either infrared opacity or albedo of the Earth-atmosphere system, which comprise the feedback coupling mechanisms of present concern, results in $d\alpha_p/dT_S = 0$, while dF/dT_S is evaluated as follows. Let $F = \varepsilon\sigma T_S^4$, where σ is the Stefan-Boltzmann constant; then for $F = 233\ W/m^2$ and $T_S = 288\ K$, $\varepsilon = 0.6$ is the emissivity of the Earth-atmosphere system. Thus $dF/dT_S = 3.3$, and from equation (2),

$$\beta = 70^{\circ}C \tag{3}$$

so that a 1-percent change in S would produce a $0.7^{\circ}C$ change in T_S. The above constitutes a reference value for the sensitivity parameter, in that it contains the basic temperature-radiation negative feedback but none of the possible feedback associated with variable optical properties of the Earth-atmosphere system.

Change in water vapor amount is a positive atmospheric feedback mechanism since an increase in surface temperature increases the water vapor content of the atmosphere, which increases the atmospheric infrared opacity with a subsequent further increase in surface temperature. Most studies are in agreement that this feedback roughly doubles climate sensitivity. For example, Cess (1976) has empirically suggested that $dF/dT_S = 1.6$ for which $\beta = 145^{\circ}C$, essentially twice that of equation (3).

An additional positive mechanism is ice-albedo feedback. A warmer planet results in less snow and ice cover and thus in a lower albedo and in turn a yet warmer planet. Annual models (Lian and Cess, 1977; Manabe and Wetherald, 1975) suggest that this mechanism increases β from $145^{\circ}C$ to $185^{\circ}C$, although a recent seasonal model (Wetherald and Manabe, 1981) indicates that an annually averaged seasonal model is more stable than the analogous annual model; this subject is discussed further in a later section.

In addition to water vapor and ice-albedo feedbacks, there are numerous other possible feedback mechanisms, perhaps the most controversial being cloudiness-radiation feedback. In the following section, some aspects of this mechanism are discussed.

CLOUDINESS-RADIATION FEEDBACK

Cloudiness-radiation feedback contains two uncertain aspects. The first is the question of whether or not cloud amounts, heights, optical properties, and structure will significantly change in response to CO_2-induced warming. If such changes are not significant, then obviously there will be no cloudiness-radiation feedback. But if cloud amounts and heights are influenced by climatic change, then both the solar and the infrared components of the radiation budget will be altered; it is the relative role of these radiation changes that constitutes the second uncertain aspect of the problem.

For example, if cloud amounts decrease, then since clouds are generally brighter than clear-sky regions, the Earth-atmosphere system albedo would be reduced, resulting in increased solar heating of the system. But decreased

cloudiness would also reduce the infrared opacity of the atmosphere, resulting in increased infrared cooling of the Earth-atmosphere system. Thus the separate solar and infrared modifications act in opposite directions. A corresponding change in effective cloud height would further modify the outgoing infrared radiation: a reduction in effective cloud height, for example, would enhance infrared cooling since the lower (and hence warmer) clouds would radiate more energy to space.

Employing a general circulation model which predicts both cloud amount and cloud height, Manabe and Wetherald (1980) have suggested that equatorward of 50° latitude, doubling and quadrupling atmospheric CO_2 would reduce net cloud amount and effective cloud height because of CO_2-induced warming; both effects increase the outgoing infrared radiation. But this increase is nearly compensated in the model by the corresponding increase in absorbed solar radiation due to reduced cloud amount. Poleward of 50°, they found an increase in net cloud amount without any substantial change in effective cloud height. But the absence of the latter, which contributed to the near solar-infrared compensation at lower altitudes, is in effect offset by reduced insolation at higher latitudes, so that again the model predicts near compensation between absorbed solar and outgoing infrared radiation.

Manabe and Wetherald (1980) emphasize, "In view of the uncertainty in the values of the optical cloud parameters and the crudeness of the cloud prediction scheme incorporated into the model, it is premature to conclude that the change of cloud cover has little effect on the sensitivity of climate." There have, in fact, been suggestions (Petukhov et al., 1976; Hunt, 1981; Wang et al., 1981; Charlock, 1981) that changes in cloud optical properties associated with climatic change might be important in modeling cloudiness-radiation feedback.

Alternate approaches to estimating the relative solar-infrared components of cloudiness-radiation feedback involve empirical studies using Earth radiation budget data. In one such approach, Cess (1976) has suggested solar-infrared compensation, whereas Ohring and Clapp (1980) and Hartmann and Short (1980) have suggested that the solar component dominates the infrared component by roughly a factor of 2. Cess employed the satellite data compilation of Ellis and Vonder Haar (1976), while the other two studies utilized radiation budget data derived from scanning radiometer measurements by the National Oceanic and Atmospheric Administration (NOAA). Recently Cess et al. (1982) have reviewed these studies and illustrate that such empirical conclusions depend substantially upon the satellite data set which is employed. They further suggest that the conclusions of solar dominance (Ohring and Clapp, 1980; Hartmann and Short, 1980) might be attributable to the NOAA albedo values at 0900 local time together with the NOAA data being derived from narrow spectral measurements.

Clearly the empirical approaches comprise an important means of studying the cloudiness-radiation feedback problem. The approach by Ohring and Clapp (1980) is particularly attractive. They have employed interannual variability in regional monthly mean radiation data, from which they estimate the relative solar-infrared cloudiness feedback components by attributing this variability to interannual variability in cloudiness. It would seem most worthwhile to reexamine their conclusions by employing radiation budget data which do not suffer the possible deficiencies noted above.

CLIMATE CHANGE PREDICTIONS

An obvious test of a climate model is its ability to reproduce seasonal climatic change. Recently Ramanathan et al. (1979) have formulated a seasonal energy balance climate model; the seasonal change in surface air temperature predicted by this model is compared with observations in figure 1. The extremely good agreement between predicted and observed surface air temperatures is due in part to tuning of the model, since the latitudinal heat capacity of the Earth-atmosphere system was tuned to the observed surface air temperature. Nevertheless, tuning a single parameter results in both phase and amplitude being correct.

Reproducing the observed seasonal cycle does not, however, ensure that the model can correctly predict a perturbed climate. For example, the energy balance model does not account for changes in the heat capacity of the Earth-atmosphere system due to changes in the thickness and extent of sea ice. But Wetherald and Manabe (1981) have indicated that such changes can significantly influence the high-latitude seasonal response of surface temperature to enhanced atmospheric CO_2. Furthermore, Wetherald and Manabe find that their seasonal model predicts significantly less sensitivity to increased atmospheric CO_2 than does the corresponding annual model, and this also appears to be related to changes in sea ice thickness and extent.

To illustrate the dependence of climate sensitivity upon high-latitude Earth-atmosphere heat capacity changes associated with sea ice changes, we have changed arbitrarily high-latitude heat capacity within the seasonal energy balance model described by Ramanathan et al. (1979). This change is summarized in table I for a doubling of atmospheric CO_2. Here R is the latitudinal heat capacity of the Earth-atmosphere system, with the values for present CO_2 being those obtained by tuning to the present climate. For doubled CO_2, we have arbitrarily increased R at the high latitudes to crudely mimic the fact that a warmer planet would result in a reduction in both thickness and extent of sea ice, and thus allow more efficient interaction between atmosphere and ocean with a corresponding increase in the heat capacity of the Earth-atmosphere system at these latitudes.

Figure 2 illustrates the seasonal increase in surface air temperature in several high-latitude regions for doubled CO_2 concentrations, both with and without the change in R listed in table I. Clearly our arbitrary change in R is not realistic, since at 85° N, it reduced annual mean surface air temperature. But the point of figure 2 is obvious: the perturbed seasonal cycle at high latitudes is highly sensitive to climate-induced changes in R. Moreover, the qualitative features shown in figure 2 are consistent with the model results of Wetherald and Manabe (1981), in that maximum high-latitude warming occurs during the winter. This is also consistent with an interesting empirical study by Vinnikov and Groysman (1979). Employing observed climatic change over roughly the past century, they have evaluated $\Delta T_S/\Delta \bar{T}_S$ as a function of season and latitude, where ΔT_S is the change in seasonal surface temperature at a given latitude and $\Delta \bar{T}_S$ is the corresponding change in global mean surface temperature. Their results are summarized in figure 3, from which it is again shown that maximum sensitivity occurs during the winter.

Aside from zonal seasonal sensitivity, recall that Wetherald and Manabe (1981) additionally found that global warming due to increased atmospheric CO_2 was reduced when they employed a seasonal rather than an annual climate model. The present energy balance model suggests that this reduction is associated with the influence of the change in R upon the seasonal cycle. Employing the energy balance model in both annual and seasonal modes, we obtain the following increases in global mean surface temperature for a doubling of atmospheric CO_2 concentration:

$\Delta\bar{T}_S = 3.3^{\circ}C$ for annual model

$\Delta\bar{T}_S = 3.3^{\circ}C$ for seasonal model with fixed R

$\Delta\bar{T}_S = 2.7^{\circ}C$ for seasonal model with variable R

The point here, of course, is that the seasonal model produces reduced global warming only if the heat capacity is allowed to vary.

In addition to warming as a consequence of CO_2 additions to the atmosphere, fossil fuel burning can alter chemical composition in other ways through interactive atmospheric chemistry; this is discussed in the following section.

INTERACTIVE ATMOSPHERIC CHEMISTRY

Recent atmospheric chemical models indicate that as a consequence of increasing emissions of CO, NO_x, and CH_4 due to fossil fuel burning, tropospheric ozone and methane concentrations might significantly increase in the near future (Logan et al., 1978; Hameed et al., 1979). This increase in tropospheric O_3 and CH_4 is a consequence of interactive chemical processes involving species derived from CH_4, H_2O, NO_x, and O_2. Although only about 10 percent of atmospheric ozone is located within the troposphere, this ozone contributes roughly half of the total ozone greenhouse effect because of pressure broadening of the 9.6-μm band (Ramanathan and Dickinson, 1979). Thus an increase in tropospheric ozone, in conjunction with a corresponding increase in tropospheric methane, could possibly produce a significant climatic effect, augmenting the global warming due to increasing atmospheric CO_2, which is also a consequence of fossil fuel burning.

An additional interactive effect is that a warmer climate would, by itself, influence atmospheric chemical composition, since increased atmospheric water vapor, resulting from a warmer climate, would produce increased OH, an important constituent in chemical reactions which govern the amounts of tropospheric ozone and methane. Thus, not only can changes in atmospheric composition alter the climate, but also climatic change can alter atmospheric composition through interactive chemistry. This then constitutes a climate feedback mechanism.

To crudely appraise whether or not increased emissions of CO, NO_x, and CH_4, resulting from increased fossil fuel consumption, could significantly augment the related CO_2 warming, we have constructed a coupled climate-chemical model for the purpose of investigating the sensitivity of the global climate to changes in CO, NO_x, and CH_4 emissions. This model is described as follows.

The climate-chemical model is a combination of the energy balance climate model described by Ramanathan et al. (1979) and an extended version of the tropospheric chemical model of Hameed et al. (1979). Both models employ latitude as the sole dimension. The climate model incorporates separately calculated changes in surface-troposphere radiative heating due to changes in atmospheric CO_2 and tropospheric O_3 and CH_4. The chemical model employs vertically averaged conditions, so that it predicts changes in the total tropospheric column abundance of O_3 and CH_4 as a function of latitude.

Figure 4 illustrates, in schematic form, the most important chemical processes resulting from changes in CO, CH_4, and NO_x emissions. An increase in CO emission will, for example, lead to a conversion of OH to HO_2. Since OH is the only known tropospheric sink for CH_4, this reduction in OH thus leads to an increase in tropospheric CH_4. In addition, the increased HO_2 converts NO to NO_2, with photodissociation of the latter producing odd oxygen which then combines with O_2 to increase the level of tropospheric O_3. Thus, increasing the emission of CO leads to increases in both CH_4 and O_3.

An increase in CH_4 emission does, of course, directly increase the concentration of CH_4. Moreover, the oxidation of CH_4 produces CO which, by the process just discussed, increases the concentration of O_3.

Increasing the emission of NO_x also leads to an increase in O_3 as a consequence of the NO_2 to O to O_3 process just discussed. In addition, photodissociation of O_3 produces $O(^1D)$ which reacts with H_2O to form OH; then the increased OH subsequently leads to a reduction in CH_4. So, although enhanced NO_x emission leads to increased tropospheric O_3, increased O_3 reduces the amount of tropospheric CH_4. Of course, the dependence of OH upon O_3 also modifies the increase in CH_4 due to increasing either CH_4 or CO emissions.

Changes in tropospheric O_3 and CH_4, through altering the infrared opacity of the troposphere, lead to climatic change, and this in turn influences the atmospheric composition through a secondary feedback loop as illustrated in figure 4. For example, an increase in both tropospheric CH_4 and O_3 would lead to warming of the Earth-tropospheric system, which in turn would increase tropospheric H_2O and, through the reaction with $O(^1D)$, lead to enhanced OH. This in turn would decrease the CH_4 concentration, as well as the concentration of CO, and subsequently of O_3. Thus the climate-chemical interaction results in a negative feedback mechanism, partially, but not totally, reducing the increased CH_4 and O_3 which produced climate change in the first place. Obviously there are numerous interactive processes at work concerning the influence of chemical composition change upon climate.

To model the coupled climatic change, the CO_2-climate model of Ramanathan et al. (1979) is employed. In that model, climatic change was induced by reducing the outgoing latitudinal infrared flux by the amount $\Delta F(CO_2)$ corresponding to a specified increase in atmospheric CO_2. The quantity $\Delta F(CO_2)$ was determined from a separate radiation calculation. We use the same procedure in this study, with $\Delta F(CO_2)$ replaced by

$$\Delta F = \Delta F(CO_2) + \Delta F(O_3) + \Delta F(CH_4) \tag{4}$$

The calculations of $\Delta F(O_3)$ and $\Delta F(CH_4)$ account for the increase in infrared opacity of the troposphere due to the fundamental vibration-rotation bands of O_3(9.6 μm) and CH_4(7.8 μm). Ultraviolet (UV) absorption by O_3 within the troposphere has been neglected, since most of the UV is absorbed within the stratosphere. As in the comparable CO_2 calculation, overlap by water vapor absorption is included as well as the influence of clouds. Illustrative results for $\Delta F(O_3)$ and $\Delta F(CH_4)$, corresponding to a doubling of the present atmospheric concentrations of both species, are shown in figure 5.

It should be emphasized that the present climate-chemical model does not include an interactive stratosphere. Since the stratosphere acts as the primary source of tropospheric O_3, we would not anticipate changes in tropospheric O_3 to significantly influence the stratosphere. But just the reverse is the case for CH_4: tropospheric methane is transported into the stratosphere, so that changes in tropospheric CH_4 should induce stratospheric change.

Although carbon-cycle models exist for the purpose of estimating future atmospheric CO_2 concentrations, it is a far more hazardous endeavor to attempt to predict future CO, NO_x, and CH_4 emissions. Table II lists estimated anthropogenic and natural emissions of these quantities for the entire globe in 1976. Except for major depressions and wars, the annual increase in fossil fuel consumption has been 4.3 percent over the past century (Rotty, 1978). If this growth rate continues, fossil fuel consumption will increase by a factor of 8 in 2025 relative to 1976. But this by no means implies that anthropogenic emissions of CO, NO_x, and CH_4 will increase by the same factor.

Roughly 60 percent of the present anthropogenic CO emission stems from automobiles, and it is not likely that future petroleum consumption by automobiles will increase at the same rate as total fossil fuel consumption. On the other hand, conventional coal-fired power plants produce twice the amount of CO per unit of energy as do oil-fired plants, because of the combined effects of coal's lower heating value and its less complete combustion. Thus, in this context, conversion from oil to coal would by itself lead to increased anthropogenic CO emission. But technological improvements in the utilization of coal, such as coal gasification and the use of fluidized bed reactors in the burning of pulverized coal, could reduce future CO emission per unit of energy. In principle, of course, it is technologically possible to significantly reduce emissions of CO, NO_x, and CH_4; however, the global extent to which this might be done will surely be influenced by economic factors.

Future changes in natural emissions of CO, NO_x, and CH_4 are just as difficult to predict. Vegetation is the primary source of natural CO, while a substantial production of natural CH_4 stems from swamps and rice fields. Deforestation and the draining of swamps might decrease such emissions, although it has been suggested that deforestation may be leveling off as the result of more efficient use of existing agricultural land (Rotty, 1979). There is, in fact, some evidence for reforestation on the North American Continent, with forests replacing abandoned agricultural land which has proven to be only marginally productive. On the other hand, future CO_2 warming of the biosphere, coupled possibly with increased global precipitation and CO_2 fertilization, might tend to significantly increase natural CO and CH_4 emissions. In particular, the natural production of CH_4 is strongly temperature dependent.

Obviously the above discussion precludes any sort of quantitative estimate of future CO, NO_x, and CH_4 emissions. For the present purpose of illustrating nothing more than the sensitivity of global climate to changes in these emissions, we choose arbitrarily the following scenario:

1. The CO_2 content of the atmosphere increases by a factor of 1.7, consistent with Keeling and Bacastow's (1977) carbon-cycle model for 2025 relative to 1976.

2. Natural emissions of CO, NO_x, and CH_4 remain the same.

3. Anthropogenic emissions of these constituents increase by factors of 4 and 8.

4. Latitudinal emission distributions remain the same.

Results of the coupled climate-chemical model, for this hypothetical 1976 to 2025 scenario for the change in emissions, are listed in tables III and IV. In table III, no account has been taken of the previously discussed negative climate-chemical feedback resulting from the climate-induced change in atmospheric H_2O. Without changing the anthropogenic emissions of CO, NO_x, and CH_4, global temperature is increased by 2.63°C because of the increase in CO_2 concentrations by a factor of 1.7. Significantly greater warming occurs when CO, NO_x, and CH_4 emissions are increased.

The results of table IV incorporate the negative climate-chemical feedback. For no change in anthropogenic CO, NO_x, and CH_4 emissions, increasing OH resulting from global warming due to the CO_2 increase reduces tropospheric O_3 and CH_4 by factors of 0.9 and 0.85, respectively. The resulting climatic effect is rather minor, reducing the prior 2.63°C warming to 2.45°C. Although reduced somewhat from the corresponding values in table III, the increase in hemispheric warming due to increased emissions of CO, NO_x, and CH_4 is still significant. Relative to the global temperature increase of 2.63°C, which corresponds to no interactive chemistry, global warming is increased by 0.7°C and 1.4°C for increases in anthropogenic emissions by factors of 4 and 8, respectively.

We again emphasize that we chose the assumed 1976 to 2025 scenario regarding the increase in CO, NO_x, and CH_4 emissions solely for the purpose of illustrating how the climate responds to a change in such emissions. A realistic appraisal of future emissions of these constituents requires knowledge not only of future power-production technology on a global scale, but also of the manner in which the biosphere responds to future climatic change. It might well be that the latter is more significant than the former. The conclusion of this study is simply that the climate can respond to changes in the total emissions of CO, NO_x, and CH_4, as the result of the ensuing changes in tropospheric O_3 and CH_4.

REFERENCES

Cess, R. D.; Briegleb, B. P.; and Lian, M. S. 1982: Low-Latitude Cloudiness and Climate Feedback: Comparative Estimates From Satellite Data. J. Atmos. Sci., vol. 31, no. 1, pp. 53-59.

Cess, Robert D. 1976: Climate Change: An Appraisal of Atmospheric Feedback Mechanisms Employing Zonal Climatology. J. Atmos. Sci., vol. 33, no. 10, pp. 1831-1843.

Charlock, Thomas P. 1981: Cloud Optics as a Possible Stabilizing Factor in Climate Change. J. Atmos. Sci., vol. 38, no. 3, pp. 661-663.

Ellis, James S.; and Vonder Haar, Thomas H. 1976: Zonal Average Earth Radiation Budget Measurements From Satellites for Climate Studies. Atmospheric Science Paper 240 (NGR 06-002-102), Colorado State Univ. (Available as NASA CR-149319.)

Hameed, Sultan; Pinto, Joseph P.; and Stewart, Richard W. 1979: Sensitivity of the Predicted CO-OH-CH_4 Perturbation to Tropospheric NO_x Concentrations. J. Geophys. Res., vol. 84, no. C2, pp. 763-768.

Hartmann, Dennis L.; and Short, David A. 1980: On the Use of Earth Radiation Budget Statistics for Studies of Clouds and Climate. J. Atmos. Sci., vol. 37, no. 6, pp. 1233-1250.

Hunt, B. G. 1981: An Examination of Some Feedback Mechanisms in the Carbon Dioxide Climate Problem. Tellus, vol. 33, no. 1, pp. 78-88.

Keeling, Charles D.; and Bacastow, Robert B. 1977: Impact of Industrial Gases on Climate. Energy and Climate, Natl. Acad. Sci.-Natl. Res. Counc., pp. 72-95.

Lian, M. S.; and Cess, R. D. 1977: Energy Balance Climate Models: A Reappraisal of Ice-Albedo Feedback. J. Atmos. Sci., vol. 34, no. 7, pp. 1058-1062.

Logan, Jennifer A.; Prather, M. J.; Wofsy, S. C.; and McElroy, M. B. 1978: Atmospheric Chemistry: Response to Human Influence. Philos. Trans. R. Soc. London, ser. A, vol. 290, no. 1367, pp. 187-234.

Manabe, Syukuro; and Wetherald, Richard T. 1975: The Effects of Doubling the CO_2 Concentration on the Climate of a General Circulation Model. J. Atmos. Sci., vol. 32, no. 1, pp. 3-15.

Manabe, Syukuro; and Wetherald, Richard T. 1980: On the Distribution of Climate Change Resulting From an Increase in CO_2 Content of the Atmosphere. J. Atmos. Sci., vol. 37, no. 1, pp. 99-118.

Ohring, George; and Clapp, Philip 1980: The Effect of Changes in Cloud Amount on the Net Radiation at the Top of the Atmosphere. J. Atmos. Sci., vol. 37, no. 2, pp. 447-454.

Petukhov, V. K.; Feygelson, Ye. M.; and Manuylova, N. I. 1976: The Regulating Role of Clouds in the Heat Effects of Anthropogenic Aerosols and Carbon Dioxide. Atmos. & Oceanic Phys., vol. 11, no. 8, pp. 505-508.

Ramanathan, V.; and Dickinson, Robert E. 1979: The Role of Stratospheric Ozone in the Zonal and Seasonal Radiative Energy Balance of the Earth-Troposphere System. J. Atmos. Sci., vol. 36, no. 6, pp. 1084-1104.

Ramanathan, V.; Lian, M. S.; and Cess, R. D. 1979: Increased Atmospheric CO_2: Zonal and Seasonal Estimates of the Effect on the Radiation Energy Balance and Surface Temperature. J. Geophys. Res., vol. 84, no. C8, pp. 4949-4958.

Rotty, Ralph M. 1978: Atmospheric Carbon Dioxide - Possible Consequences of Future Fossil Fuel Use. Resour. & Energy, vol. 1, pp. 231-249.

Rotty, Ralph M. 1979: Uncertainties Associated With Global Effects of Atmospheric Carbon Dioxide. ORAU/IEA-79-6(0), Oak Ridge Assoc. Univ.

Schneider, Stephen M.; and Mass, Clifford 1975: Volcanic Dust, Sunspots, and Temperature Trends. Science, vol. 190, no. 4216, pp. 741-746.

Vinnikov, K. Ya.; and Groysman, P. Ya. 1979: Empiricheskaya Model' Sovpemennykh Izmeneniy Klimata (An Empirical Model of the Present-Day Climatic Changes). Meteorol. Gidrol., no. 3, pp. 25-36.

Wang, Wei-Chyung; Rossow, William B.; Yao, Mao-Sung; and Wolfson, Marilyn 1981: Climate Sensitivity of a One-Dimensional Radiative-Convective Model With Cloud Feedback. J. Atmos. Sci., vol. 38, no. 6, pp. 1167-1178.

Wetherald, Richard T.; and Manabe, Syukuro 1981: Influence of Seasonal Variation Upon the Sensitivity of a Model Climate. J. Geophy. Res., vol. 86, no. C2, pp. 1194-1204.

ORIGINAL PAGE IS
OF POOR QUALITY

TABLE I.- VALUES OF HEAT CAPACITY AT HIGH LATITUDES FOR PRESENT AND DOUBLED ATMOSPHERIC CO_2 CONCENTRATIONS

CO_2 concentration	Heat capacity R, J/m^2-^oC, at latitudes of -				
	45° N	55° N	65° N	75° N	85° N
Present[a]	33	30	18	22	15
Doubled	33	30	30	30	30

[a]R values in model tuned to present climate.

TABLE II.- ESTIMATED 1976 EMISSIONS OF CO, NO_x, AND CH_4

Constituent	Anthropogenic emission, metric tons/year	Natural emission, metric tons/year
CO	700×10^6	2730×10^6
NO_x	20	16
CH_4	95	380

ORIGINAL PAGE IS
OF POOR QUALITY

TABLE III.- HYPOTHETICAL 1976 TO 2025 CLIMATE CHANGE SCENARIO

WITHOUT CLIMATE-CHEMICAL FEEDBACK

Anthropogenic emissions of CO, NO_x, and CH_4 increased by factors of -	Resulting factor increases in -		ΔT_S, ^oC
	O_3	CH_4	
0	1.00	1.00	2.63
4	1.68	1.92	3.57
8	2.29	3.62	4.42

TABLE IV.- HYPOTHETICAL 1976 TO 2025 CLIMATE CHANGE SCENARIO

WITH CLIMATE-CHEMICAL FEEDBACK

Anthropogenic emissions of CO, NO_x, and CH_4 increased by factors of -	Resulting factor increases in -		ΔT_S, ^oC
	O_3	CH_4	
0	0.90	0.85	2.45
4	1.50	1.53	3.28
8	2.00	2.68	4.00

ORIGINAL PAGE IS
OF POOR QUALITY

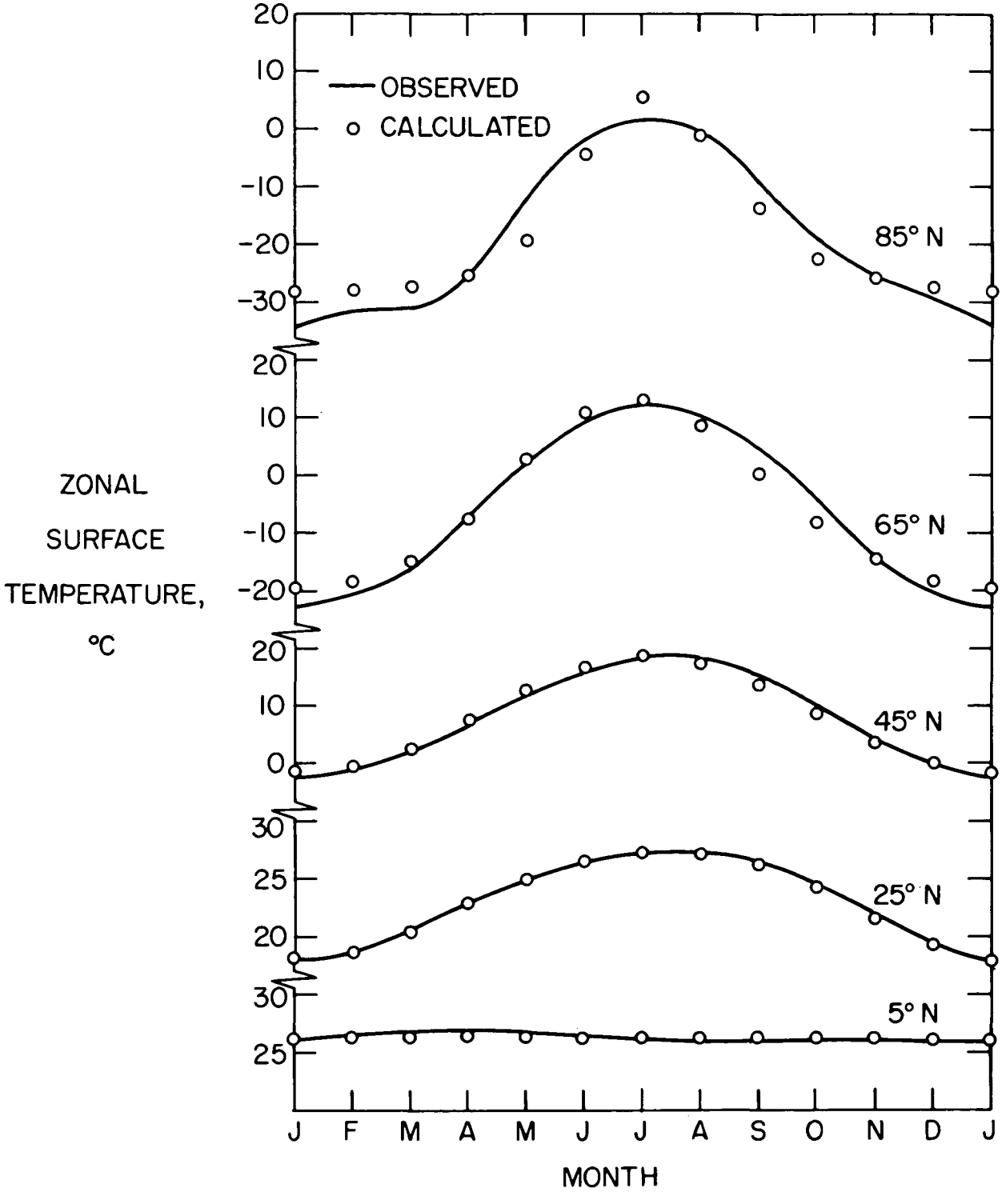

Figure 1.- Comparison between observed and calculated seasonal zonal surface temperatures.

ORIGINAL PAGE IS
OF POOR QUALITY

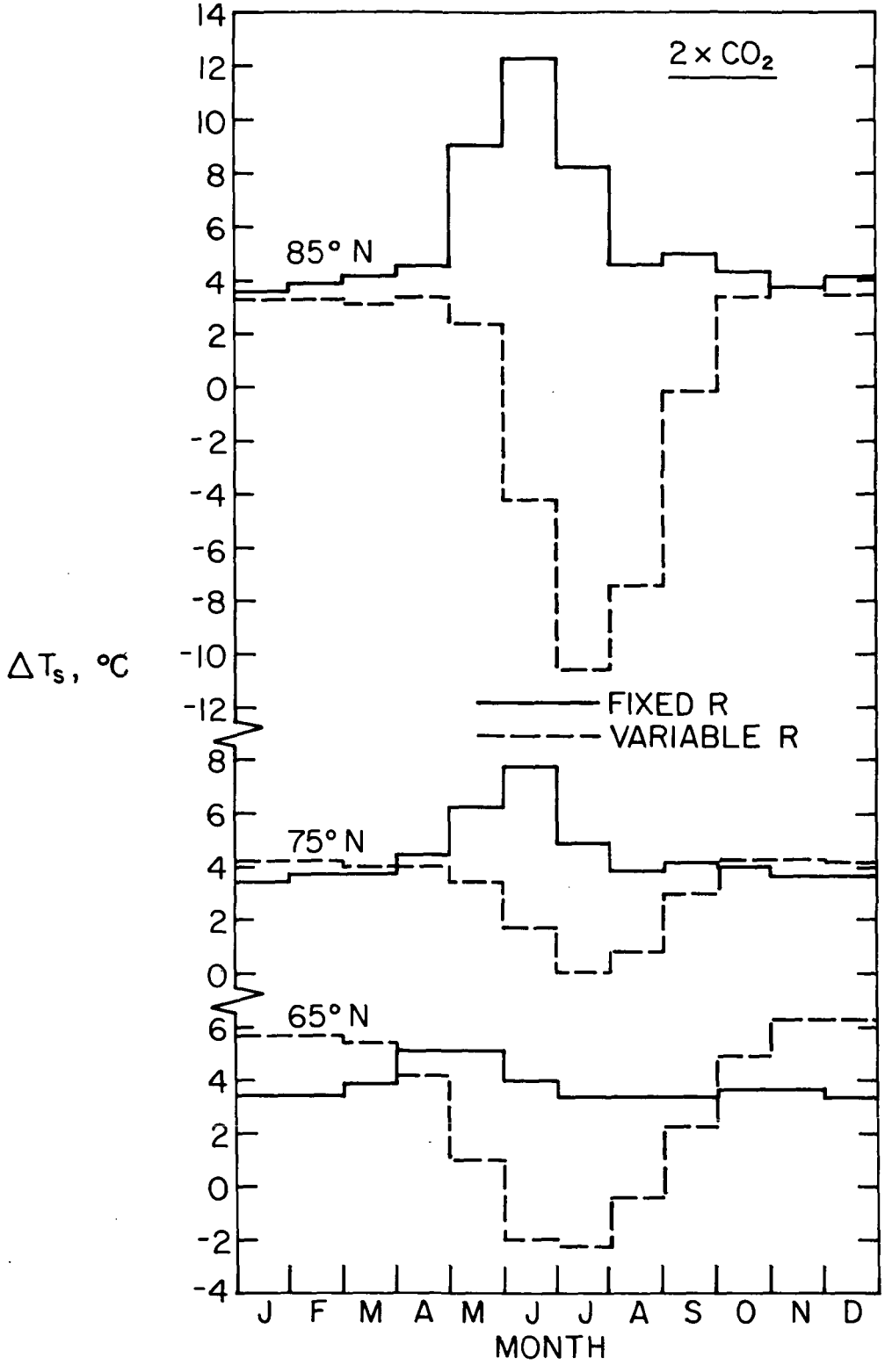

Figure 2.- Calculated change in zonal seasonal surface temperature ΔT_S for doubling of CO_2 concentration, with and without change in heat capacity R.

ORIGINAL PAGE IS
OF POOR QUALITY

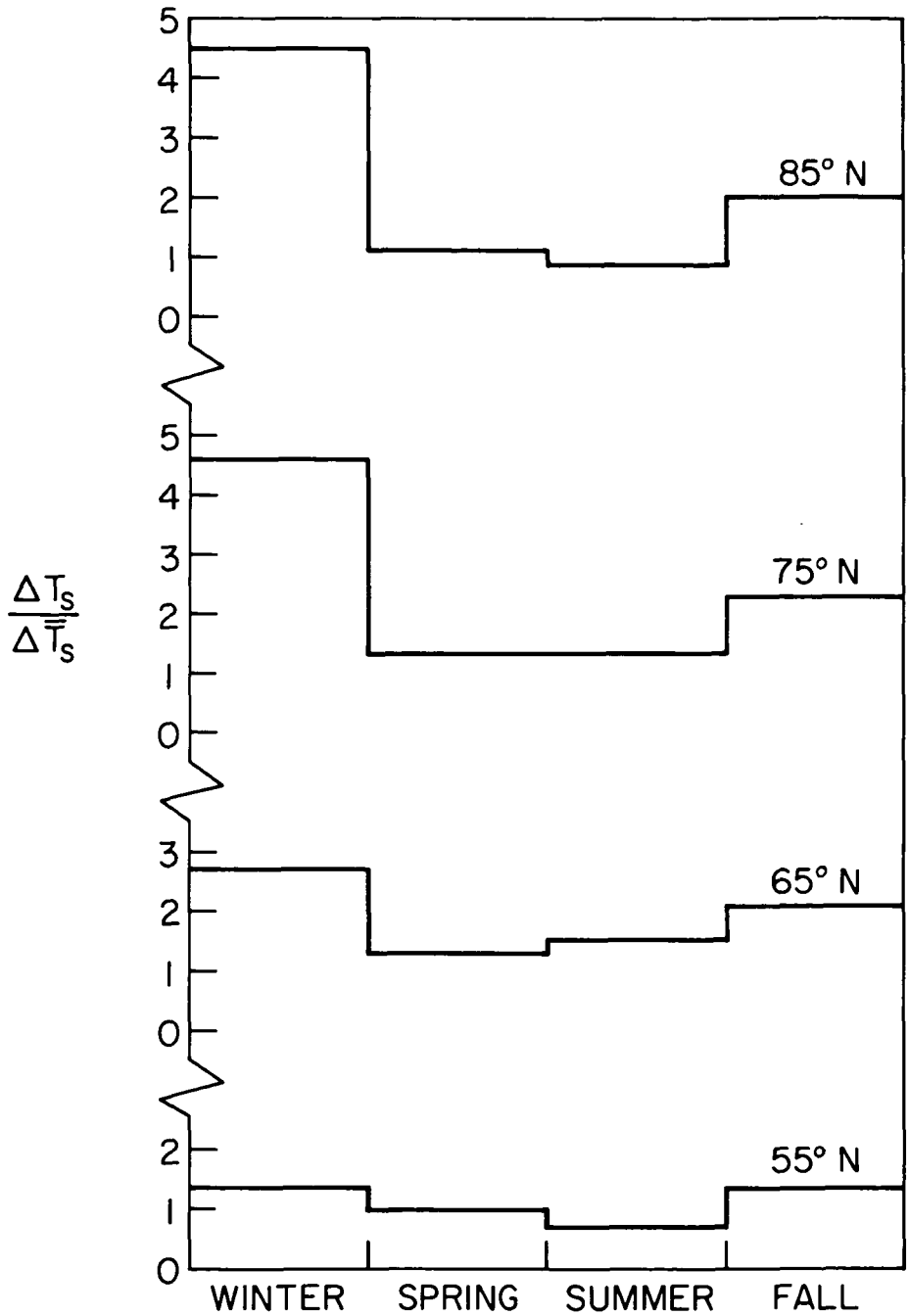

Figure 3.- Empirically determined zonal seasonal climate sensitivity $\Delta T_S/\Delta \bar{T}_S$ from Vinnikov and Groysman (1979).

ORIGINAL PAGE IS
OF POOR QUALITY

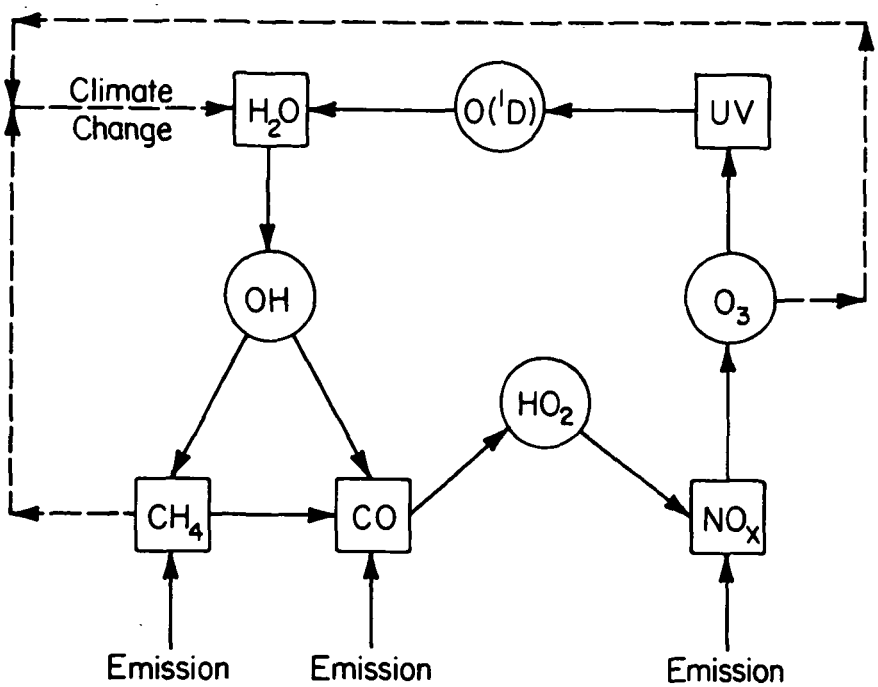

Figure 4.- Schematic illustration of the major chemical reactions affecting tropospheric O_3 and CH_4.

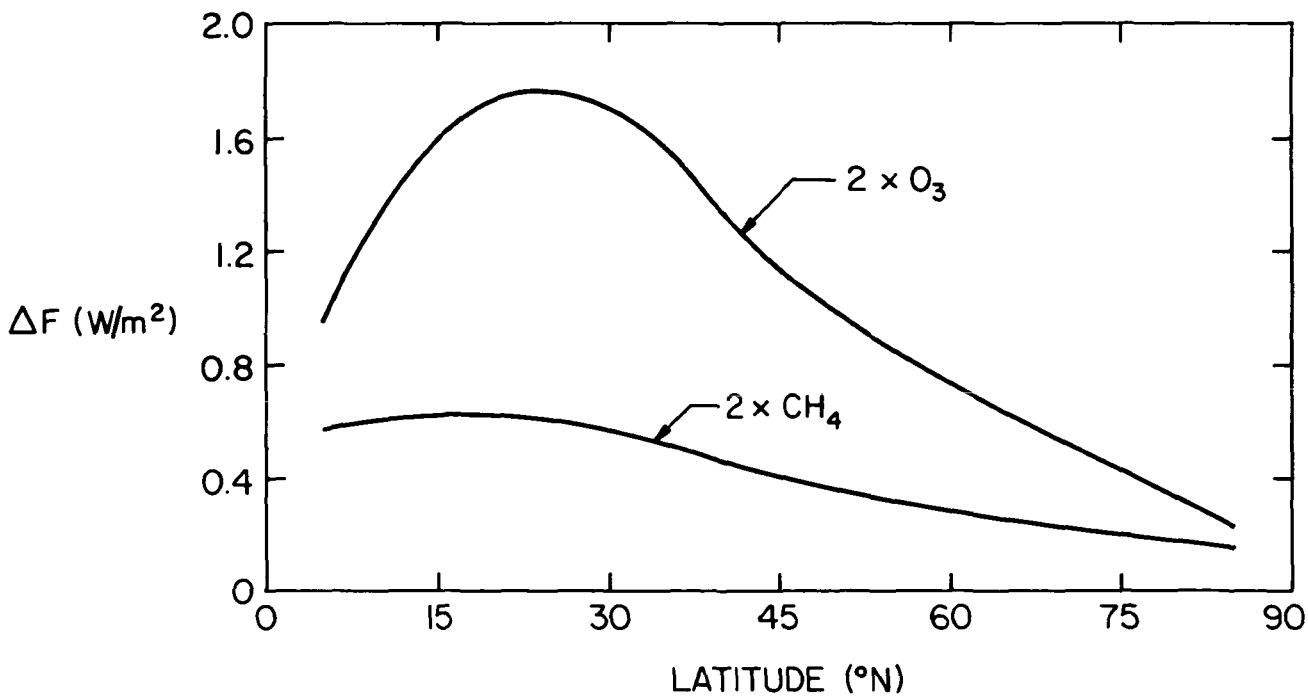

Figure 5.- The surface-troposphere heating for doubling O_3 and CH_4 relative to their present concentrations.