NASA
Technical
Paper
2051

November 1982

Water Vapor Measurement System in Global Atmospheric Sampling Program

David R. Englund and
Thomas J. Dudzinski

NASA

NASA
Technical
Paper
2051

1982

Water Vapor Measurement System in Global Atmospheric Sampling Program

David R. Englund and
Thomas J. Dudzinski
Lewis Research Center
Cleveland, Ohio

NASA
National Aeronautics
and Space Administration

**Scientific and Technical
Information Branch**

Summary

The water vapor concentration in the upper troposphere and lower stratosphere (6- to 13-km altitude) was measured as part of the NASA Global Atmospheric Sampling Program (GASP). GASP measurement systems were installed on four airline-operated B-747 aircraft in commercial service to measure atmospheric constituents in order to determine, if possible, whether aircraft are contributing significantly to pollution of the upper atmosphere. Frostpoint temperature levels encountered on GASP flight routes ranged from $-20°$ to $-80°$ C. This corresponds to air samples at cruise altitudes with moisture contents ranging from 1200 to 1.2 parts per million by weight (ppmw).

The GASP hygrometers were a modified version of a commercial dew/frostpoint instrument with a remote, thermoelectrically cooled mirror sensor. EG&G International, Inc., Environmental Equipment Division, Waltham, Massachusetts, manufactured the hygrometers. Modifications included changes in sensor configuration, the use of a three-stage cooler for extended dew/frostpoint range, and the addition of control circuits to permit automatic, unattended operation. Packaging was changed to meet Federal Aviation Administration (FAA) and Boeing Company environmental requirements for operation on B-747 aircraft.

The hygrometer operates on the principle that condensate forms on the mirror surface as the mirror is cooled to the dew/frostpoint of the air sample. As the condensate forms, an optical bridge detects the change in mirror reflectance and provides a signal to control the mirror temperature so that the condensate film neither grows nor evaporates. By definition, this is the dew/frostpoint temperature. A platinum resistance thermometer embedded in the mirror is used to determine mirror temperature. Output is a linear 0- to 5-V dc signal corresponding to a dew/frostpoint temperature range of $20°$ to $-80°$ C.

The GASP hygrometers were calibrated against laboratory standard cooled-mirror hygrometers. Calibrations were performed before and after each installation on an aircraft. For normal operation the estimated uncertainty of the dew/frostpoint measurements was ± 1.7 deg Celsius.

Introduction

This report describes the measurement of water vapor concentration made as part of the Global Atmospheric Sampling Program (GASP). The hygrometers are a modified version of a commercial dew/frostpoint temperature (DFPT) instrument manufactured by EG&G International, Inc., Environmental Equipment Division, Waltham, Massachusetts. The major modification made by EG&G for GASP use was in the configuration of the sensor and the use of a three-stage thermoelectric cooler to extend the DFPT measurement range to $-80°$ C at altitudes of 6 to 13 km. Other modifications included changes in the hygrometer readout, the addition of control circuits to permit automatic, unattended operation, and repackaging into standard avionics enclosures. The modified hygrometers met FAA and Boeing Company environmental requirements for operation on B-747 aircraft. Eight hygrometers were purchased for GASP.

The GASP, managed by the NASA Lewis Research Center, made daily global measurements of atmospheric constituents including water vapor, ozone, carbon monoxide, aerosols, and condensation nuclei. The measurements were made in the upper troposphere and lower stratosphere (6- to 13-km altitudes) by using fully automatic instrumentation systems installed on four airline-operated B-747 aircraft in commercial service. A NASA Convair 990 capable of flying a GASP measuring system was used to survey off-airline routes on an assignment basis. The purposes of the program were to obtain baseline data and to monitor the constituents associated with emissions of aircraft engines to determine, if possible, whether aircraft are contributing significantly to pollution of the upper atmosphere. Details of the aircraft system are given in references 1 and 2. A series of reports (refs. 3 to 13) describe the flight routes, dates, data-processing procedures, and data tape specifications.

It should be noted that, early in the GASP program (from 1975 through early 1977), water vapor measurements were made with aluminum oxide sensors. Reference 11 briefly describes this sensor and its performance; references 4, 6, 7, 9, and 11 are data reports that include data from these sensors. The performance of the aluminum oxide sensors proved to be inadequate in the GASP environment, and so the change to the cooled-mirror hygrometers was made.

In this report the GASP water vapor measurement system using the cooled-mirror hygrometer is described in sufficient detail so that a potential user can make a judgment as to the quality of the water vapor measurement. Hygrometer performance details, calibration procedures, and measurement errors are discussed.

GASP Measurement System

This section describes the GASP aircraft installation and its operation, control, and data acquisition system. Air-sampling details for the water vapor measurement and in-flight hygrometer operation are included.

Operation and Control

The GASP measuring system installation in the B-747 aircraft is shown in figure 1. The installation was located near the nose below the passenger level. The system can be divided into three functional subsystems: (1) constituent-measuring instruments, (2) air-sampling systems, and (3) the data management and control system.

The GASP installation contained instruments for measuring water vapor, ozone, carbon monoxide, aerosols, and condensation nuclei. A particulate filter collection unit capable of sequential exposure of a number of filters was also installed on two GASP aircraft. Details on the operation of the GASP system are given in reference 1.

A dedicated air-sampling probe, separate from the main GASP sampling probe, was used for the water vapor measurement. The probe assembly, shown in figure 2, consisted of a Rosemount Engineering Company air-sampling probe with an anti-icing heater, an aluminum interface flange, and the water vapor sensor. The air-sampling probe is widely used on aircraft for total temperature measurements. It has sufficient length to sample air from outside the aircraft boundary layer and has an inertia separator to eliminate particles from the sample. The air sample was brought into the sensor through a flow tube in the probe housing that extended into the sensor body and directed the sample across the mirror surface. Flow rate was limited to 1 standard liter per minute by a restriction in the flow tube. Exhaust was through a passage in the sensor body, through a hole in the probe base, and overboard through a downstream-facing port. No provision was made to cap the water vapor probe when the GASP system was not in use. All electrical connections to the sensor and the anti-icing heater were made through a connector at the base of the sensor. A power/control cable was routed to a power/control unit (PCU) mounted in the GASP instrument rack.

As the sample flowed into the probe and through the sensor, it was first compressed from ambient to total (stagnation) conditions and then throttled to the probe exit port pressure. This combination of processes resulted in a sample temperature essentially equal to total

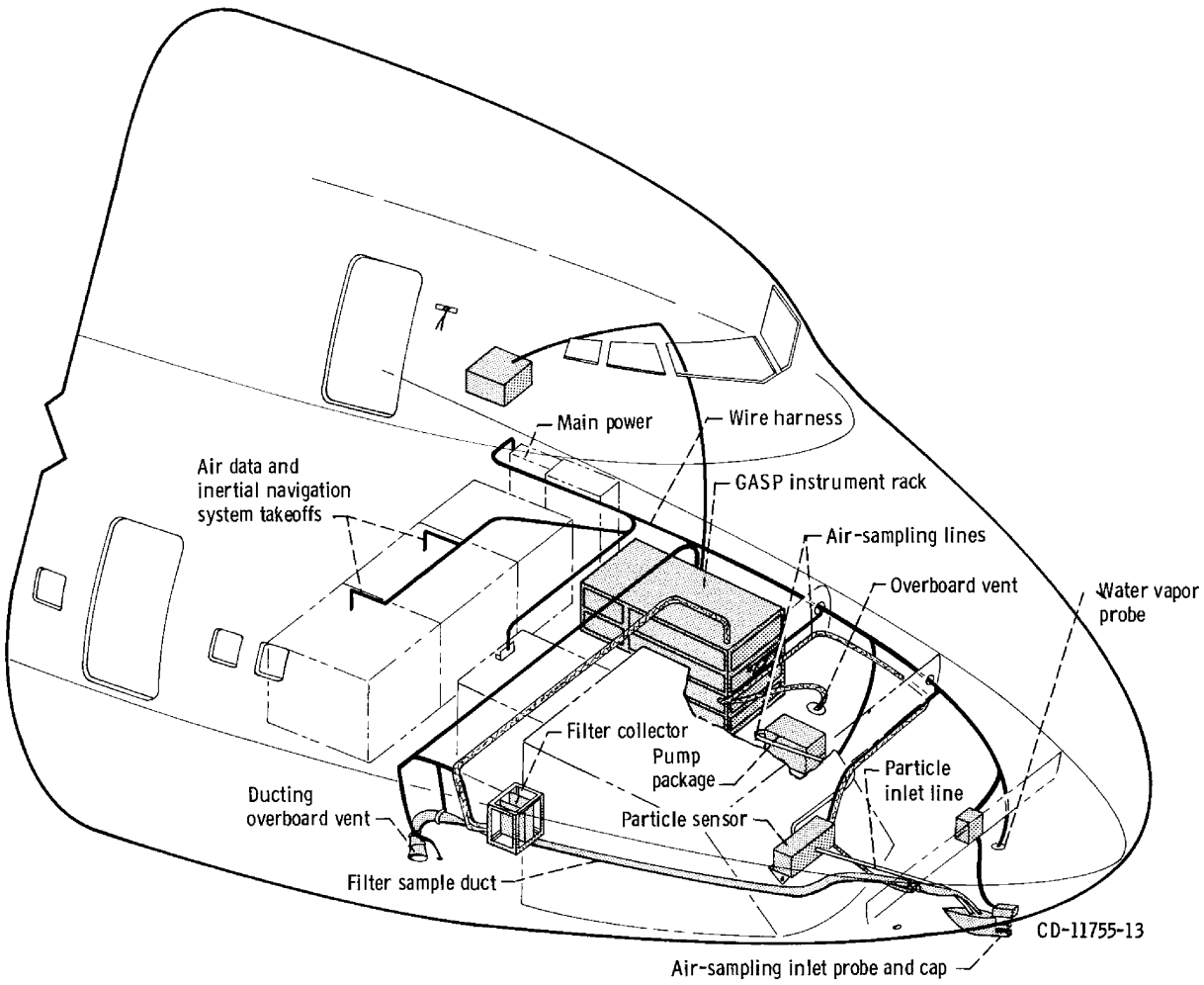

Figure 1. - GASP system installation on Boeing 747.

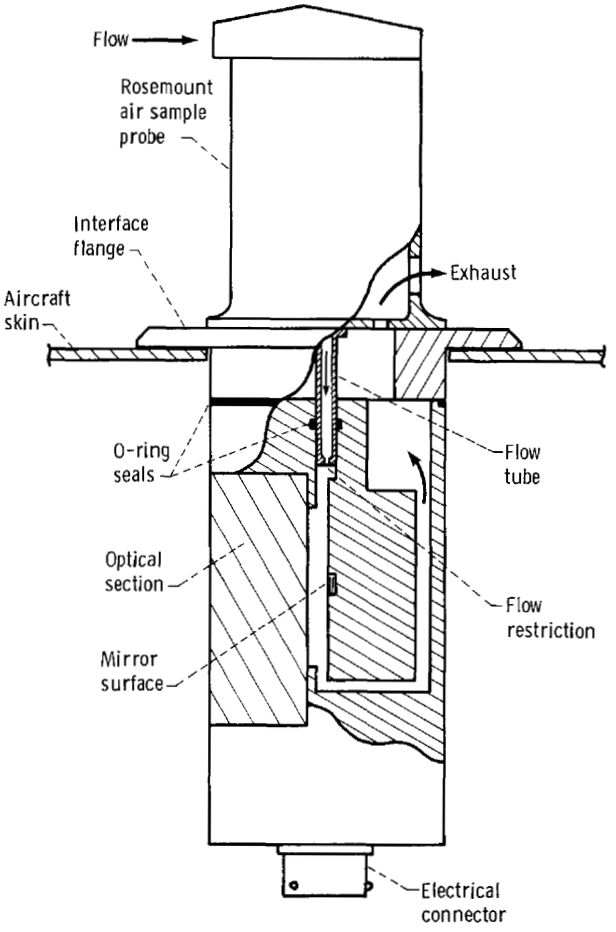

Figure 2. - GASP water vapor probe/sensor assembly.

temperature and a pressure slightly below free-stream static pressure. The reduced exit pressure was the result of the downstream-facing exit port; the magnitude of the reduction was approximately 15 percent of the velocity head (total pressure minus static pressure). At 0.8 Mach number the sample pressure was about 8 percent below static pressure.

Automatic control of all system operations was provided by the data management and control unit (DMCU). This unit contained a small special-purpose computer programmed to provide the automation. Before takeoff, the GASP system was powered and placed in a standby operating condition. No data were recorded. After takeoff, the DMCU, upon receiving a signal at 6-km altitude, deactivated the water vapor anti-icing heater and initiated the operation cycle.

The operation cycle had a period of 1 hour and consisted of twelve 5-min segments. Six of these segments were data periods during which constituent measurements were made. Interspersed between these data segments were six 5-min calibration segments during which control signals were used to place the instruments in various calibration modes. The number and nature of calibration periods for each instrument were dependent on that instrument's operating characteristics. Data were recorded during the last 16 sec of each 5-min segment. At the conclusion of each flight, when the aircraft descended through 6-km altitude, the DMCU returned the system to standby status.

Data System

The DMCU also managed the data flow between the various subsystems and formatted the data for output to a digital casette tape recorder. Figure 3 is a block diagram showing the relationship between system control, data acquisition, and the aircraft. In addition to data from the air-sampling instruments, supportive data such as pressures, temperatures, valve positions, and instrument identification signals were recorded. Aircraft flight data were collected at the time of air constituent measurements. Latitude, longitude, heading, and the computed wind direction and velocity were obtained from the aircraft inertial navigation system. Altitude, airspeed, and static air temperature were collected from the central air data system in the aircraft. Date and time were provided by a separate clock calendar unit.

At intervals of about 2 weeks, data tape casettes were replaced and data were transcribed onto computer-compatible tape for further processing. Instrument identification codes recorded with the data were used to maintain a history-of-use file for each hygrometer. Data were edited and data tape reports were prepared at the Lewis Research Center. Data tapes are available through the National Climatic Center, Asheville, North Carolina 28801.

Water Vapor Measurement System

The water vapor measurement system consisted of a cooled-mirror sensor/probe assembly (fig. 4(a)) and a power/control unit (PCU) (figs. 4(b) and (c)). The sensor assembly was a machined aluminum housing configured

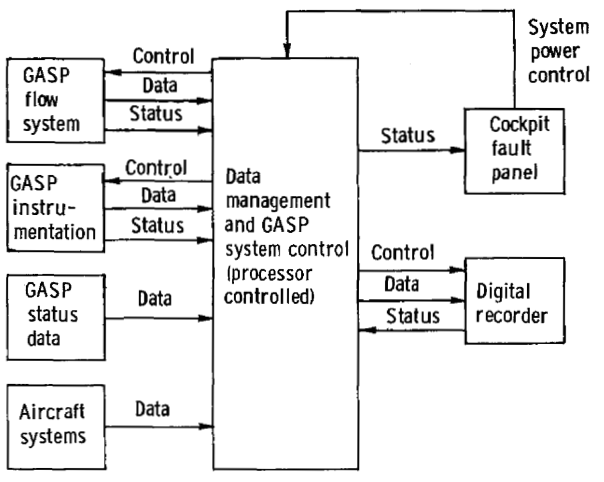

Figure 3. - GASP data management and system control.

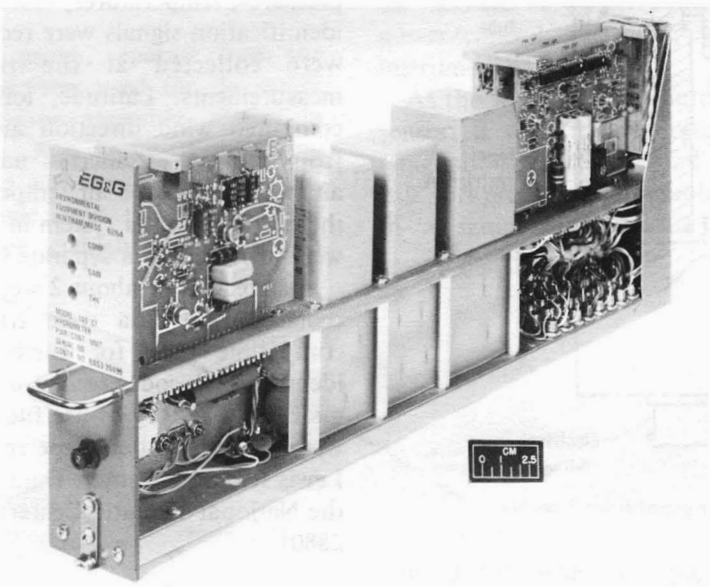

(b) Power/control unit, right front view.

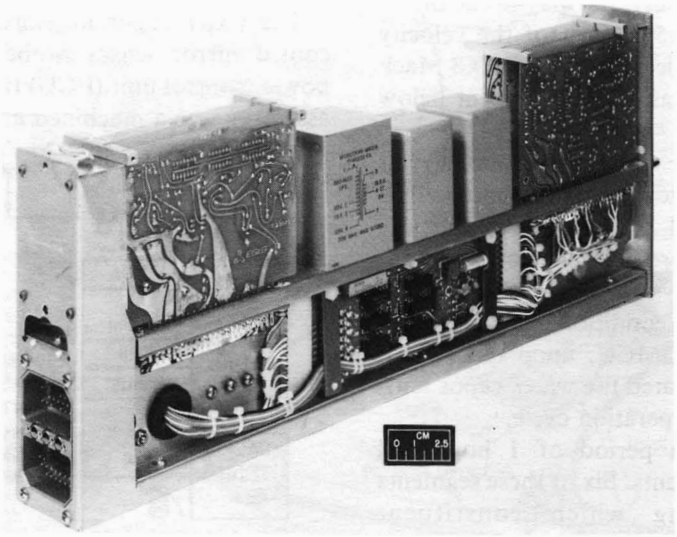

(c) Power/control unit, left rear view.

Figure 4. - GASP vapor measurement system.

to fit through a 6-cm hole in the aircraft skin. The sensor/probe assembly weighed 1.5 kg. Sensor ambient temperature level was minimized by insulating around the sensor on the interior of the aircraft. Cooling of the sensor face was provided by heat transfer through the aluminum interface flange to the aircraft skin. An O-ring seal on the sensor face prevented leaks into the sample chamber from the pressurized interior of the aircraft.

The PCU was packaged in an avionics case, 6 cm wide, 50 cm long, and 20 cm high. The PCU weighed 5 kg. The PCU environment was approximately the same as that in the passenger cabin. Air from the passenger compartment was circulated around the GASP equipment rack for cooling. In flight the PCU ambient temperature range was 12° to 27° C. Temperatures internal to the PCU case were about 5 deg Celsius above ambient.

In flight, there were four modes of operation; namely, DATA, ABC, MAX COOL, and PCU CAL. In the DATA mode the hygrometer output represented the DFPT of the air sample. An automatic balance circuit (ABC) was activated once per hour to compensate for the possible buildup of contaminants on the mirror surface and for possible variations of circuit components with time and temperature. In the ABC mode the mirror was heated to drive off all condensation and the optical control circuit was balanced to null out any change in dry-mirror reflectance. In the MAX COOL mode a circuit was activated to apply maximum cooling current to the thermoelectric heater/cooler. This provided a check on the mirror cooling capability and the lowest measurable DFPT at the particular flight condition. In the PCU CAL mode a precision resistor was substituted for the mirror platinum resistance thermometer (PRT) to provide a check on the stability of the mirror temperature-measuring circuitry. The MAX COOL and PCU CAL circuits were activated at varying intervals from once per hour to once per flight.

The output of the hygrometer was a linear 0- to 5-V dc signal corresponding to DFPT's from 20° to −80° C. The DFPT levels encountered on the GASP flight routes ranged from −20° to −80° C. This corresponds to air samples with a moisture content from 1200 to 1.2 ppmw. DFPT in degrees Celsius was computed from

$$\mathrm{DFPT} = 20 - 20\ E_{out}$$

where E_{out} is the output voltage from the hygrometer. The values of DFPT reported in the GASP data tapes are at altitude pressure. Water vapor concentrations are also reported as the water vapor mixing ratio in ppmw.

Hygrometer Functional Description

Historically, condensation hygrometers have provided accurate water vapor measurements over a wide range of dew/frostpoint temperatures. This is a fundamental measurement: Only a temperature readout calibration is necessary. Over the years improvements in the means of mirror cooling, mirror temperature measurements, and optical techniques for mirror control have resulted in hygrometers capable of automatic, continuous measurements (ref. 14).

The measurement technique and the operation of the GASP hygrometer components are discussed in the next section.

Cooled-Mirror Operation Technique

When the mirror surface is cooled and maintained at the dew/frostpoint, the gas sample is saturated with respect to water or ice. The rate of water molecules leaving the gas sample and condensing on the cooled surface is equal to the rate of water molecules leaving the surface and reentering the gas sample. By definition the vapor pressure of the condensate is equal to the water vapor partial pressure of the sample gas. The relationship between saturation temperature and saturation partial pressure is accurately known (refs. 15 and 16) and is used as a reference for humidity sensor calibration. If the water vapor partial pressure is known, all other humidity definitions can be expressed.

The principle of operation of the hygrometer is depicted in figure 5. The three-stage thermoelectric cooler will change the mirror temperature as required to establish a suitable layer of dew or frost on the mirror surface. The condition of the mirror surface is detected by an optical system whereby light emanating from a light-emitting diode (LED), CR2, is directed onto the mirror surface and reflected to a phototransistor, Q2. As the condensate forms, light reflected from the surface is scattered and the phototransistor current level is thus reduced. The reduction in phototransistor current, detected by a control amplifier in a dewpoint control loop (DPCL) circuit, causes a reduction in thermoelectric cooler current so that a stable condensate film thickness is achieved. This condensate thickness on the mirror surface, which is directly related to a specific amount of light reduction to the phototransistor, is then maintained by the DPCL.

A second LED, CR1, and a second phototransistor, Q1, are used in the sensor to provide a bias for the LED/phototransistor pair operating via the mirror surface. The amount of light received by the bias phototransistor is factory preset so that the output of Q1

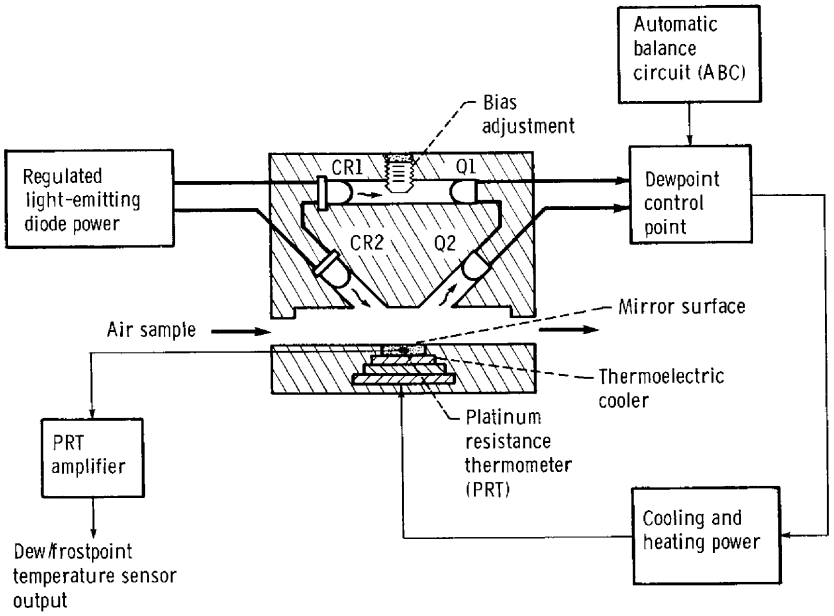

Figure 5. - Principle of operation of GASP hygrometer.

is approximately equal to that of Q2. The bias circuit serves to minimize the effect of ambient temperature changes on circuit components.

Signal Processing

A block diagram of the control circuitry is shown in figure 6. The major control circuit is the DPCL, which contains the circuitry necessary to establish and control a layer of condensate on the mirror surface. The DPCL circuitry consists of the main control amplifier; a thermoelectric cooler drive amplifier; thickness, gain, and compensation controls; and a zero-crossing detector for determining when the main control amplifier is balanced. The thickness, gain, and compensation controls affect the dynamics of the control loop. The hygrometer is capable of tracking changes in DFPT at rates as high as 1.5 deg/sec, the rate depending on the difference between the mirror and heat sink temperatures.

In laboratory cooled-mirror hygrometers, a manual balance control is included so that the optical sensing circuit can be rebalanced with no condensate on the mirror in order to eliminate the effects of contaminant buildup. In the GASP hygrometers this function was supplied by the automatic balance control, which was periodically activated by the GASP system control. The ABC performed the necessary switching to control the

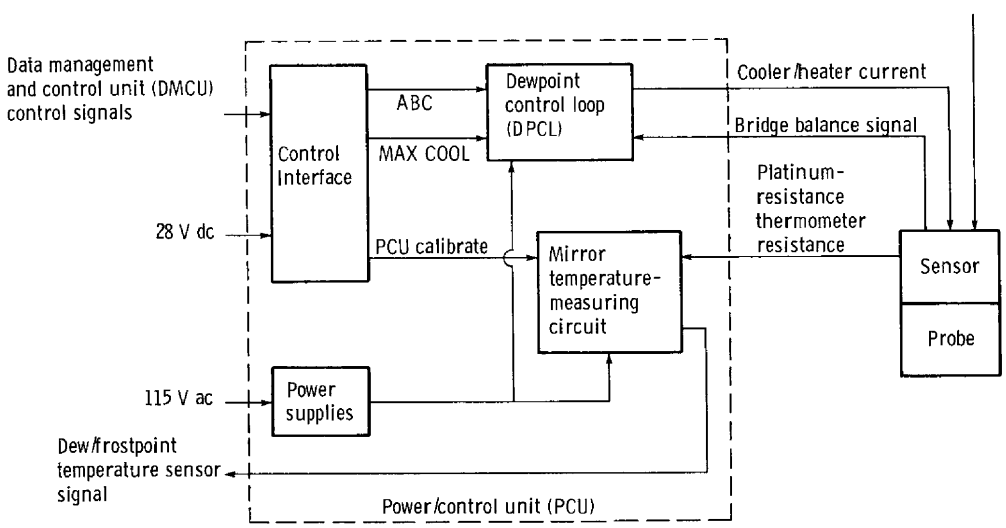

Figure 6. - Block diagram of cooled-mirror hygrometer.

DPCL and provided the required balance correction signal to the DPCL. During this operation the mirror was heated for 3 min by reversing the thermoelectric cooler current. A balance correction signal was generated by a digital-to-analog converter driven by a counter. As the counter advanced, the correction signal increased; when balance was achieved, the counter was stopped and this correction signal was maintained as a constant bias signal to the DPCL until the ABC was reactivated. Completion of the balance operation was signaled by the appearance of a 2.5-V dc signal at the DFPT output.

The mirror temperature-measuring circuit consisted of a resistance bridge network and a voltage amplifier. The PRT in the sensor was one leg of the bridge network. A single-stage differential amplifier converted the bridge unbalance signal to a linear output voltage corresponding to DFPT.

Hygrometer power was derived from the 115-V ac, 400-Hz aircraft power system. Each hygrometer was protected with a 2-A circuit breaker and a thermal switch set to open if the chassis interior temperature exceeded 55° C.

Modifications for GASP

In addition to the modifications for the remotely controlled operating modes (ABC, MAX COOL, and PCU CAL), a number of physical and operational modifications to the commercial hygrometer were required. These arose from specific GASP requirements as well as the need for compatibility with the commercial airline environment.

Constraints on the sensor included (1) capability to pass through a 6-cm hole in the aircraft skin, (2) compatibility with a Rosemount air-sampling probe, and (3) provision for anti-icing heater connections through the sensor body.

Packaging of the PCU into an avionics case was necessary to meet airline requirements. Electrical connections were made through a connector mounted on the rear panel of the case. All input/output lines to the PCU and in the sensor interconnect cable were filtered to meet Boeing Company standards for electromagnetic interference.

As in all GASP instruments, each hygrometer (both PCU and sensor) had an identification voltage divider mounted in it. This permitted the recording of the individual identity in the GASP data and made it possible to document the history of each hygrometer. Periodic removal for maintenance or calibration was facilitated, and data could be edited to identify data for which hygrometer calibration had changed.

Hygrometer Performance

Figure 7 is a copy of a strip-chart recording of the output of a hygrometer while under test in various operating modes. The horizontal scale is output voltage (0 to 5 V, right to left); the vertical scale is time. The sensor case temperature was 0° C and the sensor was connected to a source of sample gas in which the DFPT could be changed. The sequence of operating modes was DATA, MAX COOL, DATA (during which the sample DFPT was reduced by roughly 20° C), ABC, and finally DATA again. Indicated DFPT from a digital voltmeter reading of the hygrometer output is shown in the figure.

A number of the characteristics of the hygrometer performance are evident in this figure. The repeatability of the indicated DFPT following changes in operating modes that drive the mirror to extreme temperatures (both hot and cold) was within 1 deg Celsius.

The maximum heating and cooling rates for the mirror can be estimated from the slopes of the curves after initiation of MAX COOL and completion of MAX COOL and ABC. For this test condition the heating and cooling rates ranged from 1.2 to 0.5 deg/sec. The heating rate was somewhat higher than the cooling rate.

The nature of the transient response to step changes imposed on the DPCL is also evident at these mode changes. The response curves shown here are typical but were affected by the settings of the thickness, gain, and compensation controls, as well as by the test conditions. The time for the hygrometer to reach equilibrium after MAX COOL and ABC (approx 10 min) invalidated data from the immediately following DATA mode. This fact

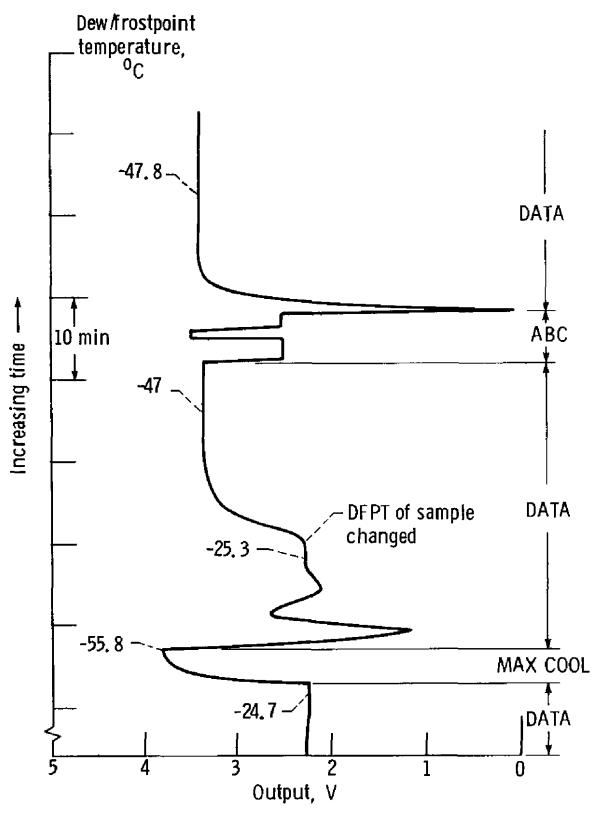

Figure 7. - Recording of hygrometer output sensor temperature.

ultimately led to a reduction in the frequency of use of the MAX COOL mode during the GASP flight program. The response to the change in sample DFPT was much slower than those associated with mode changes. However, this must not be considered a step change in DFPT since there was considerable surface area in the sample lines, which had to equilibrate to the new DFPT.

Finally the minimum temperature achieved during the MAX COOL mode (−56° C) indicated the minimum DFPT that could be measured by the hygrometer under the conditions of this test. This depended on the performance of the thermoelectric cooler and was a function of the heat sink (i.e., sensor case) temperature, in this case 0° C. The hygrometer specification states the performance of the cooler in terms of the temperature difference (mirror temperature minus heat sink temperature) that it must be able to generate as a function of heat sink temperature. Figure 8 shows this in graphical form as the limit of mirror temperature versus the interface flange temperature. All of the GASP hygrometers were acceptance checked for mirror cooling capability; all performed in the acceptable range shown in figure 8.

It should be noted that the preceding test conditions and the data of figure 8 assume that the sample temperature is the same as the heat sink temperature. In the acceptance tests this was the case. In flight operation, however, the sample temperature was higher than the heat sink temperature (assuming the aircraft skin is at static air temperature) by the order of 30 deg Celsius, depending on Mach number. The warmer sample air puts an additional heat load on the mirror. Thus figure 8 does not accurately indicate the actual range of DFPT's that could be measured in flight. This can be determined from flight data in the MAX COOL mode. Figure 9 shows the lowest measurable DFPT for all the GASP hygrometers as a function of static air temperature. A shaded area is used rather than a line because not all hygrometers performed the same; the breadth of the shaded area represents the variation in cooling performance of the different sensors. The appendix gives details on how the results shown in figure 9 were obtained and presents information from which the lowest measurable DFPT for any specific sensor can be determined.

Hygrometer Testing and Operating Experience

All GASP instrumentation was subject to reliability and quality assurance tests, to extensive acceptance tests, and to calibration and operational tests before and after flight usage. Test programs for the hygrometer were conducted by both manufacturer and Lewis Research Center personnel. The time required to perform these tests resulted in about 400 hours of hygrometer operation before installation aboard an aircraft. The test programs are described along with calibration procedures, measurement errors, and a brief discussion on the measurement history. Typical data from a GASP flight are included.

Qualification Tests

Before shipment from the manufacturer all the hygrometers were subjected to burn-in and thermal cycling tests. The burn-in required continuous operation for 1 week at room temperature with tests for failure conducted daily. Four-point calibrations before and after the burn-in were used to demonstrate hygrometer performance. Upon successful completion of the burn-in test, thermal cycling tests were conducted with the hygrometers in an environmental chamber. Chamber temperature was cycled from 0° to 60° C, down to −40° C, and then back to 0° C, at which time a test for failure was conducted. This cycle was repeated a minimum of 20 times. The final four cycles were required to be failure free.

Electromagnetic interference (EMI) tests based on procedures given in Boeing Company standards were conducted and certified by a test laboratory under contract to the manufacturer. EMI tests were conducted on one hygrometer for both generation of and susceptibility to EMI. Any design changes made for

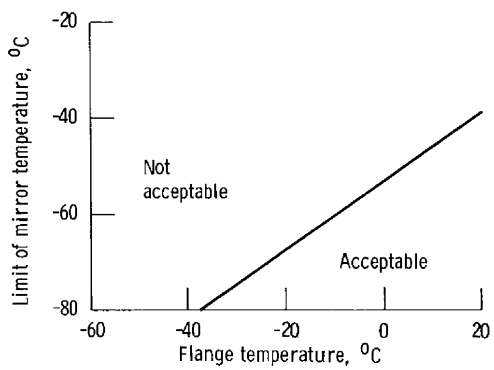

Figure 8. - Specified limit of mirror temperature as a function of flange temperature.

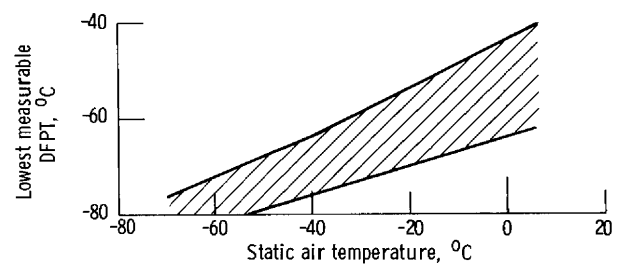

Figure 9. - Range of lowest measurable dew/frostpoint temperatures for all GASP hygrometers as a function of static air temperature.

compliance with Boeing requirements were made to all hygrometers.

At the Lewis Research Center, one hygrometer was subjected to shock and vibration tests as described in reference 17. No problems were encountered. Experience has shown that shocks encountered in handling and shipping were more severe than those specified in the test procedure even though the hygrometers were shipped in padded containers.

A five-part acceptance test program was conducted at the Lewis Research Center on each hygrometer. This program consisted of an initial inspection, functional tests, and electric power, temperature, and performance tests. These were performed to ensure compliance with specifications under laboratory and in-flight environmental conditions. Electric power tests were made to determine the effect of various steady-state and transient voltage and frequency combinations that might be encountered on B-747 aircraft. Temperature tests were conducted to check the hygrometer operation over the in-flight range of sensor and PCU ambient temperatures.

Calibration

The GASP hygrometers were calibrated at the manufacturer's plant and the Lewis Research Center by comparing their indicated DFPT's with that of a standard hygrometer. The manufacturer's standard hygrometer is a laboratory cooled-mirror instrument that has been calibrated at the National Bureau of Standards (NBS). The accuracy of this standard is within ± 0.2 deg Celsius for DFPT above $-40°$ C and within ± 0.5 deg Celsius for DFPT between $-40°$ and $-80°$ C (ref. 18). The calibration system at the Lewis Research Center used two standard instruments; one (standard A) was the same model hygrometer as that used by the manufacturer as a standard. This Lewis Research Center standard was calibrated by the manufacturer. The other (standard B) was a cooled-mirror hygrometer made by a different manufacturer. This instrument had a remote sensor so that it could be operated within an environmental chamber with the GASP sensors. The accuracy of the Lewis Research Center standards was considered to be within ± 0.7 deg Celsius for DFPT above $-40°$ C and within ± 1.0 deg Celsius for DFPT between $-40°$ C and $-80°$ C.

The use of cooled-mirror hygrometers as standards for calibration of other hygrometers is common practice. The accuracy of a proven design of cooled-mirror hygrometer is surpassed only by the gravimetric train and calibrated two-pressure-generator techniques developed by NBS (refs. 19 and 20).

Sample gas for calibration was obtained from room air, a dry compressed-air source, and liquid-nitrogen boiloff. Flow from these sources, or a blend of any of two sources, resulted in air samples with a DFPT range from 17° C down to $-53°$ C. For calibrations the air sample was either divided to the hygrometers or the hygrometers were operated in series. In the latter case, water vapor condensing or evaporating from the upstream hygrometer caused a perturbation in the output of the downstream hygrometers. Sufficient time was allowed so that these transients did not affect the calibration results. Also, care was taken to prevent a significant air sample pressure drop between hygrometers. Air sample lines were Teflon or stainless steel and were kept as short as possible. Inside diameters were 0.32 cm or larger.

Calibrations were performed with the sensors mounted in an environmental chamber so that the sensors could be cooled to simulate flight conditions. This was necessary to insure that the full DFPT range could be measured.

Figure 10 is a sampling of data from calibrations that span a 2-year period. The horizontal axis is DFPT; the vertical axis is the deviation of an individual DFPT reading from the average of the readings of the two Lewis Research Center standard hygrometers. Calibrations were made at DFPT's ranging from 17° to $-54°$ C and, within that range, calibration errors appear to be independent of DFPT.

Careful examination of the data in figure 10 will reveal that there is a slight systematic bias in the data from the GASP hygrometers and from each of the Lewis Research Center standards relative to zero error (defined as the average of the readings of the standards). The mean deviation of the data for the GASP hygrometers is $+0.9$ deg Celsius. The distribution of the data is not Gaussian: Eighty percent of the data lie within ± 1.4 deg Celsius and 92 percent of the data lie within ± 2.5 deg Celsius of the mean.

For the Lewis Research Center standard hygrometers, the mean deviations are equally displaced from their average by 0.5 deg Celsius and in this case, 80 percent of the data are within ± 0.6 deg Celsius and 92 percent of the data are within ± 0.7 deg Celsius of the mean.

The data scatter of the GASP hygrometers was larger because (1) eight individual instruments contributed to this body of data and (2) the data of figure 10 represent calibrations made both before and after flight usage. Both are significant contributors. A sample of 23 data points from figure 10 representing calibrations made before any flight usage is shown in figure 11. These data have a mean deviation of $+1.2$ deg Celsius and a distribution such that 82 percent of the data are within ± 1.0 deg Celsius and 95 percent of the data are within ± 2.0 deg Celsius of the mean.

The calibration data of figure 11 could be used to estimate the uncertainty of the GASP water vapor measurements. However, there was another source of error that at times became significant. This was the error

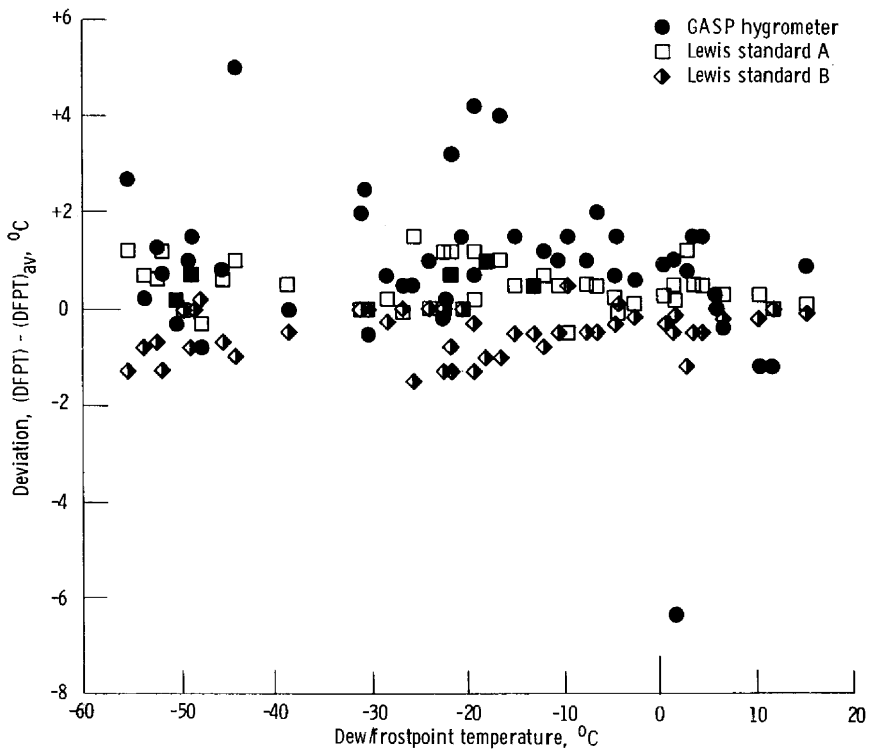

Figure 10. - Hygrometer calibration data from a 2-year period of use. ($(DFPT)_{av}$ is the average of the measurements from standard A and standard B.)

due to calibration changes during flight use. For this reason, estimation of the measurement uncertainty will be taken up after a discussion of pre- and postinstallation tests.

Also for this reason the treatment of GASP hygrometer calibration data as described herein is different from the calibration discussed in reference 13. In the earlier treatment the individual DFPT readings from the Lewis Research Center standard hygrometers and the GASP hygrometers were averaged, and the deviations from this average were calculated. This treatment was adopted because there was little reason to expect the GASP hygrometers to be less accurate than the Lewis Research Center standard hygrometers. However, inclusion of the GASP hygrometer data in the calculation of the mean value tended to minimize the effect of changes in calibration as a result of flight usage.

Pre- and Postinstallation Tests

An operational check and a calibration were performed on each hygrometer before it was installed on an aircraft. Hygrometer output was noted for the PCU CAL and ABC operation modes, mirror cooling

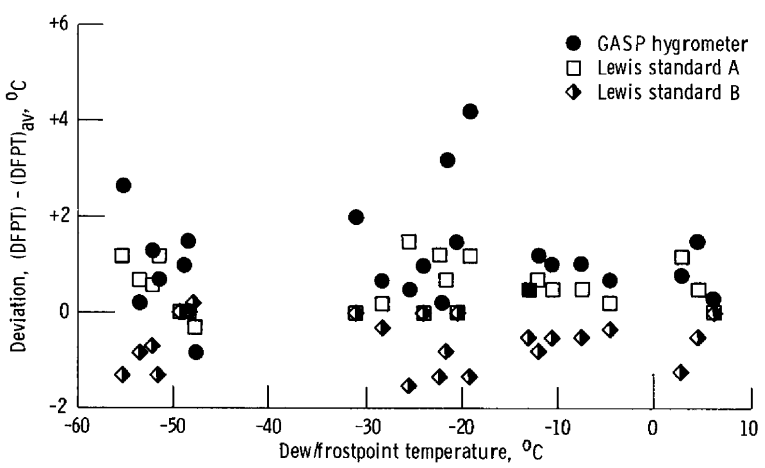

Figure 11. - Hygrometer calibration data prior to any flight use. ($(DFPT)_{av}$ is the average of the measurements from standard A and standard B.)

capability was checked, and a calibration was performed. Also, because cabin pressure was higher than air sample pressure, each sensor was leak checked by evacuating the mirror chamber to a pressure of 60 kPa below ambient, valving it off, and monitoring the pressure differential. The operational check and calibration were repeated upon the removal of the hygrometer from the aircraft. The calibration results shown in figure 10 represent a roughly equal number of pre- and postinstallation calibrations.

Calibration changes during flight use show up as changes in the average deviation of DFPT readings between the pre- and postinstallation calibrations. Table I shows these data for 14 pre- and postinstallation calibration sequences. Shown in the table are hygrometer serial number, calibration dates, duration of flight use, aircraft identification, and the change in average deviation. The deviations were calculated by taking the average value of the deviations between the GASP hygrometers and the Lewis Research Center standard hygrometers for all the calibration points (i.e., over the range of DFPT's). The difference in the average deviations for the pre- and postinstallation calibrations indicates the amount of calibration shift. It can be seen that many of the changes are of the order of the calibration uncertainty. For 60 percent of the flight periods the calibration shift was ±1 deg Celsius or less; for 80 percent of the flight periods the shift was ±2 deg Celsius or less. In some cases significant shift occurred, the largest being a 3.8 deg Celsius shift over a 9-month period of use. GASP data reports in which water vapor data are reported will state the amount of calibration shift for each flight period.

Estimated Measurement Uncertainty

An estimate of the GASP water vapor measurement uncertainty can be obtained from the data in figure 11 and table I. The estimate is based on the assumption that the only significant sources of error are (1) the uncertainty of the calibration standards, (2) the scatter in the GASP hygrometer calibration, and (3) the shift in calibration during flight use. The uncertainty of the calibration standards will be taken as ±1 deg Celsius. (Note that the average deviation between the GASP hygrometers and the calibration standards is within this band.) The scatter in the GASP hygrometer calibration will be taken as ±1 deg Celsius; a ±1 deg Celsius band includes 80 percent of the data points for the calibrations before flight use. The uncertainty due to calibration shift with flight use will be taken as ±1 deg Celsius on the

TABLE I. - CHANGE IN HYGROMETER CALIBRATION DURING FLIGHT USE

Hygrometer serial number	Calibration dates		Duration of flight use, months	Aircraft identification	Calibration shift,[a] °C
	Preinstallation	Postinstallation			
101	12-16-77	7-7-78	3	N4711U	0.1
	7-17-78	12-6-78	2	N655PA	.3
	12-6-78	8-17-79	7	N4711U	-.9
103	7-5-78	3-7-79	4-1/2	N533PA, N4711U	.7
104	10-27-77	12-2-77	1	N712NA	-.7
	12-2-77	5-2-78	3	N4711U	2.3
	5-9-78	12-1-78	4	N4711U	-2.2
	3-3-79	8-15-79	3-1/2	N533PA	-1.2
105	10-25-77	11-30-77	(b)	N533PA	-1.1
	5-5-78	10-16-78	3	N712NA	-1.0
106	11-27-77	9-15-78	8	N655PA	-.5
	9-26-78	8-14-79	9	N712NA, N655PA	3.8
108	4-27-78	9-18-78	2-1/2	N533PA	.2
	10-3-78	8-13-79	5	N533PA	-2.0

[a]Calibration shift calculated as $(\text{Average deviation})_{post} - (\text{Average deviation})_{pre}$.

$$\text{Average deviation} = \frac{\sum_{1}^{n} (DFPT)_{GASP\ hyg} - (DFPT)_{std}}{n}$$, where n is the number of calibration points.

[b]2 days.

basis that data for which the shift exceeds this amount will be identified in the data reports so that some form of correction or a decision to ignore the data can be made. These values can be combined by taking the square root of the sum of the squares to yield an estimated uncertainty of ± 1.7 deg Celsius for water vapor data for which the calibration shift was less than ± 1 deg Celsius.

A variety of other water-vapor-related parameters can be obtained from the measured DFPT. In almost every case the first step in calculating these parameters is the conversion of the DFPT reading into vapor pressure, which is also the partial pressure of the water vapor in the sample. Knowledge of the sample pressure and the ambient air temperature and pressure then allows one to calculate mixing ratios and the various humidity terms. Uncertainties in these calculations are dominated by the uncertainties in DFPT and static air temperature because of the sensitivity of the vapor pressure to temperature. From the tables of the vapor pressure of water it can be shown that the percent uncertainties in vapor pressure per degree Celsius temperature error are 13.1, 12, 11.1, 10.2, and 9.5 percent per degree Celsius at $-70°$, $-60°$, $-50°$, $-40°$, and $-30°$ C, respectively. Thus the ± 1.7 deg Celsius uncertainty in DFPT results in a 20.4 percent uncertainty in the vapor pressure at $-60°$ C.

Operating Experience

The cooled-mirror hygrometers were used for the GASP water vapor measurement from late 1977 to mid-1979. Considering the environmental requirements and the high use-factor with limited servicing, the hygrometers have been reliable, accurate instruments. Failures have been minimal. Installation intervals ranged from 2 to 9 months. Except for three instances, removals from the aircraft were for routine maintenance and/or calibration.

For the early installation intervals, the ABC, MAX COOL, and PCU CAL modes were each activated once per hour. Mirror control could not be achieved in a 5-min period following the ABC and MAX COOL mode activation, and this resulted in loss of data. Therefore a change was made to reduce the frequency of activation of the MAX COOL and PCU CAL modes to once per flight. This change was only intermittently successful, however; and it was necessary to continue processing the data as though all of the modes were activated once per hour. Since the ABC and MAX COOL modes were programmed to occur on consecutive calibration cycles, there was a 20-min-period each hour when no water vapor data were available.

After a removal of a hygrometer from an aircraft, and after a calibration check was completed, the mirror chamber was examined. In every case but one, the chamber was free of particulate buildup and the mirror surface was clean. Only routine cleaning was performed. Contaminant buildup was minor so that the optical bridge could always be balanced during the calibration check, except in the case cited above.

A sample of actual flight data is shown in figure 12. These data are from Pan Am aircraft N533PA on a flight

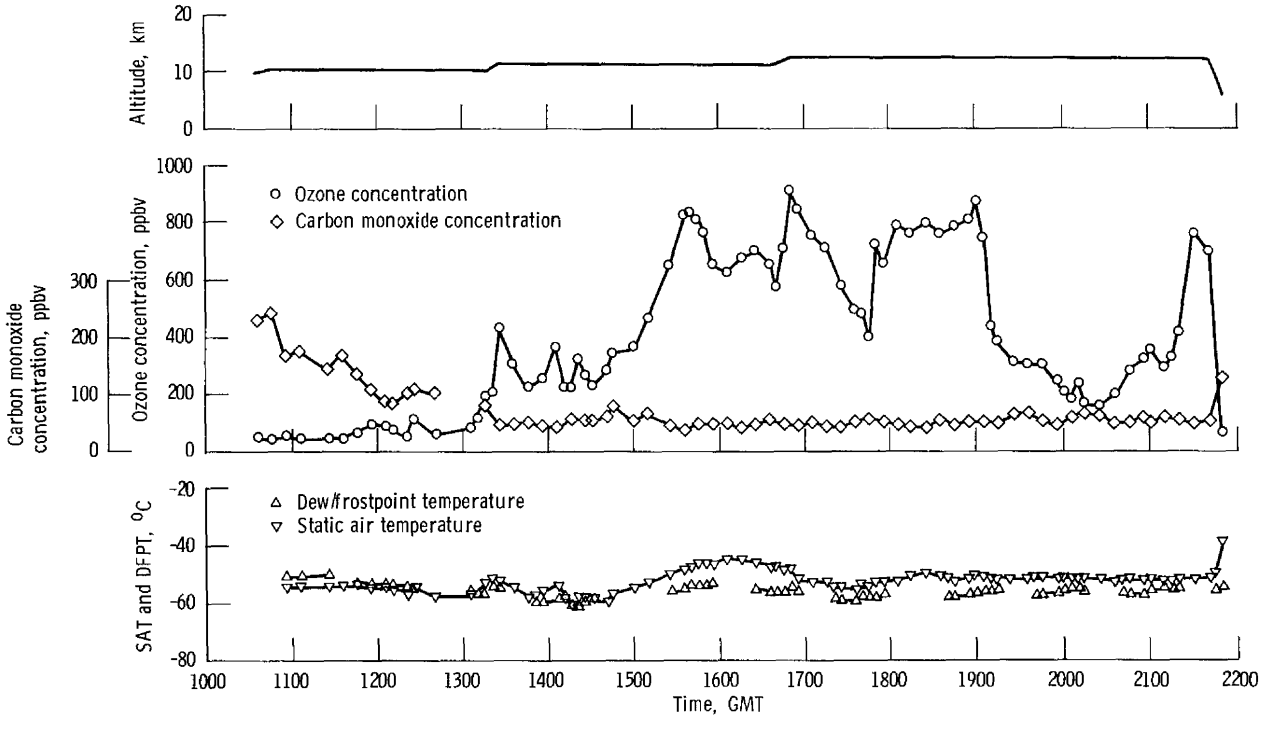

Figure 12. - GASP flight data, Pan Am aircraft N533PA, Tokyo to New York, February 11, 1978.

from Tokyo to New York. Included in this figure are DFPT and static air temperature (SAT) in degrees Celsius, ozone concentration in parts per billion by volume (ppbv), carbon monoxide in ppbv, and altitude in kilometers, all plotted versus Greenwich mean time (GMT). DFPT values measured in this flight ranged from $-50°$ to $-61°$ C. Early in the flight (before 1320 GMT), the DFPT was slightly higher than the SAT, indicating slightly supersaturated air. These data have not been corrected for the slightly reduced sample pressure, but such a correction would not be sufficient to bring the DFPT below SAT. For example, a correction for a sample pressure lower than ambient by 8 percent would lower the indicated DFPT by less than 1 degree at $-50°$ C. Also apparent in the plotted data are the 20-min gaps in the data resulting from the four consecutive 5-min segments (ABC, DATA, MAX COOL, and DATA) during which valid data could not be obtained. Careful examination will also reveal two longer data gaps, which were apparently the result of an unplanned control system reset. Toward the midpoint of the flight (about 1500 GMT) there was a sharp rise in ozone concentration, an indication of passage through the tropopause into the stratosphere. The simultaneous rise in SAT is also an indication of penetration into the stratosphere.

Concluding Remarks

The measurement of water vapor concentration in the upper troposphere and lower stratosphere (6- to 13-km altitude) was made as part of the NASA Global Atmospheric Sampling Program (GASP) over the period from late 1977 to mid-1979. The measurements were made with a modified version of a commercial dew/frostpoint hygrometer with a remote thermoelectrically cooled mirror sensor. Modifications included changes in the sensor configuration with a three-stage thermoelectric cooler for extended range, repackaging in standard avionics enclosures, and the addition of control circuits to permit automatic, unattended operation in an aircraft environment. The measuring range of the GASP hygrometers was from 20° to $-80°$ C. Frostpoint temperatures encountered on GASP flights ranged from $-20°$ to $-80°$ C.

Operational procedures to maintain the accuracy of the water vapor measurements included in-flight instrument performance checks and hygrometer calibrations before and after each installation on an aircraft. Reported water vapor data are noted in the data reports in cases where postinstallation calibrations indicated a calibration shift. For normal operation the estimated uncertainty of the GASP water vapor measurement was ± 1.7 degree Celsius.

Lewis Research Center
National Aeronautics and Space Administration
Cleveland, Ohio, May 7, 1982

Appendix – Analysis of In-Flight MAX COOL Measurements

James D. Holdeman and A. Schkolnik

A measure of the minimum dew/frostpoint temperature (DFPT) capability of the GASP cooled-mirror hygrometers was obtained by MAX COOL measurements performed at least once per flight. As cited in the text, the cooling capability in flight was less than in the laboratory tests, at least partially because in flight operation the air sample temperature was higher than the heat sink temperature. This resulted in an additional cooling load on the thermoelectric cooler.

The MAX COOL data and the corresponding static air temperature (SAT) values from flight records were used to determine the mean and the standard deviation of the MAX COOL temperature as a function of SAT for each sensor. Actually the MAX COOL temperature was also a function of flight Mach number, but because cruise Mach number was relatively constant, this variable was ignored. The results of the linear regression analysis are given in table II. The envelope of these relations for the six sensors is shown in figure 9. It should be noted that the range of the instruments was from 20° to −80° C and that any actual DFPT's above or below these limits were reported by the data system as 20° or −80° C, respectively. Because of this, only MAX COOL data above −80° C were used to generate the regression relations in table II.

In addition to describing the minimum measurable DFPT of each sensor, the regression relations were used in the final data processing to identify measurements that were at or near the minimum measurable DFPT of the instruments. A threshold was defined as 1 standard deviation above the minimum measurable DFPT determined with the appropriate regression equation for each SAT measured in flight. All DFPT data below this threshold were tagged in the GASP data records. One would expect that most of the data thus tagged were measurements made during stratospheric flight segments, where dry air is anticipated along with warming temperatures.

TABLE II. - MAX COOL TEMPERATURE AS A FUNCTION OF SAT FOR EACH SENSOR: FLIGHT DATA REGRESSION RESULTS

[MAX COOL temperature = B + m (SAT), where MAX COOL temperature and SAT are in deg Celsius.]

Sensor	B, °C	m, °C/°C	Standard deviation, °C	Number of observations
101	-47.1	0.410	2.9	446
103	-44.3	.551	2.3	611
104	-55.7	.397	2.1	188
106	-42.9	.529	2.2	562
107	-63.8	.296	1.7	569
108	-49.1	.521	2.3	109

References

1. Perkins, P. J.; and Gustafsson, U. R. C.: An Automated Atmospheric Sampling System Operating on 747 Airlines. NASA TM X-71790, 1975.
2. Perkins, P. J.: Global Measurements of Gaseous and Aerosol Trace Species in the Upper Troposphere and Lower Stratosphere from Daily Flights of 747 Airliners. NASA TM X-73544, 1976.
3. Holdeman, J. D.; and Lezberg, E. A.: NASA Global Atmospheric Sampling Program (GASP); Data Report for Tape VL0001. NASA TM X-71905, 1976.
4. Holdeman, J. D.; and Lezberg, E. A.: NASA Global Atmospheric Sampling Program (GASP); Data Report for Tape VL0002. NASA TM X-73484, 1976.
5. Holdeman, J. D.: NASA Global Atmospheric Sampling Program (GASP); Data Report for Tape VL0003. NASA TM X-73506. 1976.
6. Holdeman, J. D.; Humenik, F. M.; and Lezberg, E. A.: NASA Global Atmospheric Sampling Program (GASP); Data Report for Tape VL0004. NASA TM X-73574, 1976.
7. Holdeman, J. D.; and Humenik, F. M.: NASA Global Atmospheric Sampling Program (GASP); Data Report for Tape VL0005. NASA TM X-73608, 1977.
8. Gauntner, D. J.; Holdeman, J. D.; and Humenik, F. M.: NASA Global Atmospheric Sampling Program (GASP); Data Report for Tape Vl0006. NASA TM X-73727, 1977.
9. Holdeman, J. D.; et al.: NASA Global Atmospheric Sampling Program GASP); Data Report for Tapes VL0007 and VL0008. NASA TM-73784, 1977.
10. Holdeman, J. D.; et al.: NASA Global Atmospheric Sampling Program (GASP); Data Report for Tape VL0009. NASA TM-79058, 1978.
11. Holdeman, J. D.; et al.: NASA Global Atmospheric Sampling Program (GASP); Data Report for Tapes VL0010 and VL0012. NASA TM-79061, 1979.
12. Holdeman, J. D.; Dudzinski, T. J.; and Tiefermann, M. W.: NASA Global Atmospheric Sampling Program (GASP); Data Report for Tapes VL0011 and VL0013. NASA TM-81462, 1979.
13. Briehl, D.; Dudzinski, T. J.; and Liu, D. C.: NASA Global Atmospheric Sampling Program (GASP); Data Report for Tape VL0014. NASA TM-81579, 1980.
14. Dew Point Hygrometry. Humidity and Moisture: Measurement and Control in Science and Industry. Vol. I. A. Wexler, ed., Reinhold Publishing Corp., 1965, pp. 125-215.
15. Keenan, J. H.; and Keyes, F. G.: Thermodynamic Properties of Steam. John Wiley & Sons, 1936.
16. List, Robert L.: Smithsonian Meteorological Tables. Sixth Revised Edition, Publication No. 4014, Smithsonian Institution, Washington, D.C., 1961, pp. 347-364.
17. Environmental Conditions and Test Procedures for Airborne Electronic/Electrical Equipment and Instruments. Document Number DO-138, Radio Technical Commission for Aeronautics, Washington, D.C., June 1968.
18. EG&G Dew Point Hygrometer Error Analysis. Application Data 3-051, EG&G, Environmental Equipment Division Application, 1979.
19. Wexler, Arnold: Humidity and Moisture: Measurement and Control in Science and Industry. Volume III. Reinhold Publishing Corp., 1965.
20. Wildhack, W. A.; Powell, R. C.; and Mason, H. L.: Accuracy in Measurements and Calibrations. NBS Technical Note 262, U.S. Dept. of Commerce, National Bureau of Standards, 1965.

1. Report No.	2. Government Accession No.	3. Recipient's Catalog No.
NASA TP-2051		

4. Title and Subtitle	5. Report Date
WATER VAPOR MEASUREMENT SYSTEM IN GLOBAL ATMOSPHERIC SAMPLING PROGRAM	November 1982
	6. Performing Organization Code 505-32-82
7. Author(s) David R. Englund and Thomas J. Dudzinski	8. Performing Organization Report No. E-1167
9. Performing Organization Name and Address National Aeronautics and Space Administration Lewis Research Center Cleveland, Ohio 44135	10. Work Unit No. 11. Contract or Grant No.
12. Sponsoring Agency Name and Address National Aeronautics and Space Administration Washington, D.C. 20546	13. Type of Report and Period Covered Technical Paper 14. Sponsoring Agency Code

15. Supplementary Notes

Appendix - Analysis of In-Flight MAX COOL Measurements by James D. Holdeman and A. Schkolnik

16. Abstract

The water vapor measurement system used in the NASA Global Atmospheric Sampling Program (GASP) is described. The system used a modified version of a commercially available dew/frostpoint hygrometer with a thermoelectrically cooled mirror sensor. The modifications extended the range of the hygrometer to enable air sample measurements with frostpoint temperatures down to -80° C at altitudes of 6 to 13 km. Other modifications were made to permit automatic, unattended operation in an aircraft environment. This report describes the hygrometer, its integration with the GASP system, its calibration, and operational aspects including measurement errors. The estimated uncertainty of the dew/frostpoint measurements was ±1.7 deg Celsius.

17. Key Words (Suggested by Author(s))	18. Distribution Statement
Pollution monitoring; Water vapor; Earth atmosphere; Instrumentation; Calibrating	Unclassified - unlimited STAR Category 45

19. Security Classif. (of this report)	20. Security Classif. (of this page)	21. No. of Pages	22. Price*
Unclassified	Unclassified	17	A02

* For sale by the National Technical Information Service, Springfield, Virginia 22161

NASA-Langley, 1982