N O T I C E

THIS DOCUMENT HAS BEEN REPRODUCED FROM MICROFICHE. ALTHOUGH IT IS RECOGNIZED THAT CERTAIN PORTIONS ARE ILLEGIBLE, IT IS BEING RELEASED IN THE INTEREST OF MAKING AVAILABLE AS MUCH INFORMATION AS POSSIBLE

NOTICES PAGE

Foreign Nation Release

This information is furnished upon the condition that it will not be released to another Nation without specific authority of the cognizant agency (Military or NASA) of the United States Government, and that the information be provided substantially the same degree of protection afforded it by the Department of Defense of the United States.

Disclaimer of Liability from Act of Transmittal

When Government drawings, specifications, or other data are used for any purpose other than in connection with a definitely related Government procurement operation, the United States Government thereby incurs no responsibility nor any obligation whatsoever; and the fact that the Government may have formulated, furnished, or in any way supplied the said drawings, specification, or other data, is not to be regarded by implication or otherwise as in any manner licensing the holder or any other person or corporation, or conveying and rights or permission to manufacture, use, or sell any patented invention that may in any be related thereto.

Any information disseminated by the Data Distribution Centers of the Interagency Data Exchange Program is intended to promote test data utilization in the National interest among groups engaged in Ballistic Missile, Space Vehicle and related programs.

Dissemination of said information does not imply verification or endorsement of the information. The originator, in submitting the material is acting in accordance with the requirements of his contract, and neither the originator nor the disseminator assumes any liability to parties adopting any product, process or practice based upon the usage of the information. Its presenting the success or failure of one (or several) part number(s), model(s), lot(s) under specific environment and output requirements, does not imply that other products not herein reported on are either inferior or superior.

Omission of Charges for Follow-on Actions

Any compliance by the report originator with requests from recipients for more detailed information on IDEP reports originated under Government contracts will be considered within the scope of present contractual obligations. Compliance with such requests will be at the discretion of the report originator and will be performed without cost or obligation to the requestor unless otherwise negotiated in advance.

Reproduction of this Report

Reproduction or duplication of any portion of this report is expressly forbidden, except by those contractors receiving it directly from the Data Centers or originator, for their internal use or the use of their sub-contractors. Reproduction or display of all or any portion of this material for any sales, advertising of publicity purposes is prohibited.

12-13-82
RRP
12/12

NASA CR 165612

National Aeronautics and
Space Administration

CF6 JET ENGINE PERFORMANCE IMPROVEMENT SUMMARY REPORT

(NASA-CR-165612) THE CF6 ENGINE PERFORMANCE IMPROVEMENT Summary Report (General Electric Co.) 98 p HC A05/MF A01 CSCL 21E
N83-16342
Unclas
G3/07 08248

ACCESS DEPT.
JAN 1983
RECEIVED
NASA STI FACILITY
ACCESS DEPT.

by

W.A. Fasching

GENERAL ELECTRIC COMPANY
AIRCRAFT ENGINE BUSINESS GROUP
CINCINNATI, OHIO 45215

OCTOBER 1982

Prepared for

National Aeronautics and Space Administration
LEWIS RESEARCH CENTER
21000 BROOKPARK ROAD
CLEVELAND, OHIO 44135

NASA Lewis Research Center
Contract NAS3-20629

ORIGINAL PAGE IS
OF POOR QUALITY

1. Report No. NASA CR-165612	2. Government Accession No.	3. Recipient's Catalog No.
4. Title and Subtitle CF6 Jet Engine Performance Improvement - Summary Report		5. Report Date October 1982
		6. Performing Organization Code
7. Author(s) W. A. Fasching		8. Performing Organization Report No. R82AEB511
		10. Work Unit No.
9. Performing Organization Name and Address General Electric Company Aircraft Engine Group Cincinnati, OH 45215		11. Contract or Grant No. NAS3-20629
		13. Type of Report and Period Covered Contractor Report
12. Sponsoring Agency Name and Address National Aeronautics and Space Administration Washington, D.C. 20546		14. Sponsoring Agency Code

15. Supplementary Notes

Project Manager - J. E. McAulay, Project Engineer - R. J. Antl
NASA-Lewis Research Center, Cleveland, Ohio

16. Abstract

As part of the NASA-sponsored Engine Component Improvement (ECI) Program, a feasibility analysis of performance improvement and retention concepts for the CF6-6 and CF6-50 engines was conducted and seven concepts were identified for development and ground testing. The seven performance improvement concepts were:

- New Fan
- New Front Mount
- High Pressure Turbine Aerodynamic Performance Improvement
- High Pressure Turbine Roundness
- High Pressure Turbine Active Clearance Control
- Low Pressure Turbine Active Clearance Control
- Short Core Exhaust Nozzle

This report summarizes the development work and ground testing and presents the major test results and an economic analysis for each concept.

17. Key Words (Suggested by Author(s)) Jet Engine, Turbofan Engine, Fan, High Pressure Turbine, Low Pressure Turbine, Exhaust Nozzle, Active Clearance Control, Performance, Turbine Aerodynamics	18. Distribution Statement Unclassified - Unlimited

19. Security Classif. (of this report) Unclassified	20. Security Classif. (of this page) Unclassified	21. No. of Pages 89	22. Price*

* For sale by the National Technical Information Service, Springfield, Virginia 22161

NASA-C-168 (Rev. 10-75)

FOREWORD

The work was performed by the CF6 Engineering Department of General Electric's Aircraft Engine Group, Aircraft Engine Engineering Division, Cincinnati, Ohio. The program was conducted for the National Aeronautics and Space Administration, Lewis Research Center, Cleveland, Ohio, under the CF6 Jet Engine Performance Improvement Program, Contract Number NAS3-20629. The Performance Improvement Program is part of the Engine Component Improvement (ECI) Project, which is part of the NASA Aircraft Energy Efficiency (ACEE) Program. The NASA Project Engineer for this report was R.J. Antl. The program was initiated in February 1977 and completed in September 1981.

PRECEDING PAGE BLANK NOT FILMED

TABLE OF CONTENTS

Section		Page
1.0	SUMMARY	1
2.0	INTRODUCTION	2
3.0	FEASIBILITY ANALYSIS	4
	3.1 Analytical Procedure	4
	3.2 Results of Screening Study	4
4.0	NEW FAN	13
	4.1 Description of Concept	13
	4.2 Summary of Test Results	18
	4.3 Economic Assessment	21
5.0	NEW FRONT MOUNT	23
	5.1 Description of Concept	23
	5.2 Summary of Test Results	28
	5.3 Economic Assessment	32
6.0	HIGH PRESSURE TURBINE AERODYNAMIC PERFORMANCE IMPROVEMENT	36
	6.1 Description of Concept	36
	6.2 Summary of Test Results	44
	6.3 Economic Assessment	47
7.0	HIGH PRESSURE TURBINE ROUNDNESS	49
	7.1 Description of Concept	49
	7.1.1 Roundness Control	49
	7.1.2 Clearance Control	52
	7.2 Summary of Test Results	57
	7.3 Economic Assessment	57
8.0	HIGH PRESSURE TURBINE ACTIVE CLEARANCE CONTROL	62
	8.1 Description of Concept	62
	8.2 Summary of Test Results	63
	8.3 Economic Assessment	66

PRECEDING PAGE BLANK NOT FILMED

TABLE OF CONTENTS (continued)

Section		Page
9.0	LOW PRESSURE TURBINE ACTIVE CLEARANCE CONTROL	68
	9.1 Description of Concept	68
	9.2 Summary of Test Results	74
	9.3 Economic Assessment	76
10.0	SHORT CORE EXHAUST NOZZLE	78
	10.1 Description of Concept	78
	10.2 Summary of Test Results	81
	10.3 Economic Assessment	81
11.0	CONCLUDING REMARKS	85
APPENDIX A - REFERENCES		87
APPENDIX B - NOMENCLATURE		89

LIST OF ILLUSTRATIONS

Figure		Page
1.	Concept Comparison, Fuel Savings Versus Payback (Median Range).	10
2.	CF6 Original Production and Improved Fan Blades.	14
3.	CF6-50 Fan Case Stiffener.	16
4.	Increased Fan Nozzle Area.	17
5.	CF6-50 Engine Fan Efficiency Improvement Versus Fan Airflow for Original and Improved Fans, Sea Level Static.	20
6.	Typical Engine-Nacelle-Pylon-Wing Installation Showing Front and Rear Engine Mounts and Loads Paths.	24
7.	Original Front Mount System.	25
8.	Original and New Front Mounts, HPC Casing Radial Deflection Estimated Effect of Two Point Load Application at Maximum Static Thrust (Zero G).	26
9.	New Front Mount Assembly.	27
10.	CF6-50 Original and New Front Mount - HPC Casing Radial Deflection at Stage 3, Maximum Static Thrust Condition (Including 1 G Down).	29
11.	Original and New Front Mount - HPC Casing Backbone Radial Deflection, Maximum Static Thrust Condition (Including 1 G Down), DC-10 Inlet, DC-10 Wing Pylon.	30
12.	Original and New Front Mount - HPC Casing Backbone Radial Deflection, Takeoff at Rotation Condition (Including 1 G Down), DC-10 Inlet, DC-10 Wing Pylon.	31
13.	Improved Stage 2 Vane Aerodynamics.	37
14.	Reduced Stage 2 Exit Swirl.	38
15.	Comparison of Original and Improved Blades Showing Improved Cooling.	40
16.	Improved Wheel Space Seals.	41
17.	Tighter Tip Clearance.	42

LIST OF ILLUSTRATIONS (CONCLUDED)

Figure		Page
18.	Single Shank Turbine Deterioration Reduction - No Mateface Shank Leakage.	43
19.	Stage 1 and 2 Blades in Rotor Assembly After 1000 Cycles.	46
20.	CF6-50 Major Cases and Frames.	50
21.	Current CF6-50 Turbine Support System Design.	53
22.	Revised CF6-50 Turbine Support System.	54
23.	Typical Hot Rotor Reburst.	55
24.	Clearance Versus Time During a Decel.	58
25.	Clearance Versus Time During an Accel.	59
26.	HPT Stator Out-of-Roundness Comparison, Takeoff.	60
27.	Active Clearance Control High Pressure Turbine	63
28.	High Pressure Turbine Active Clearance Control Piping.	64
29.	The General Electric CF6-50 Full Engine Cross Section.	69
30.	Current Production LPT Cooling Manifold.	70
31.	LPT Stator Shroud Honeycomb Wear Pattern.	72
32.	ACC LPT Cooling Manifold.	73
33.	Comparison of Short Core Nozzle to Long Fixed Core Nozzle	79
34.	CF6-50 Nacelle-Pylon-Core Nozzle Comparison.	80
35.	Test Cell Data, Fan Nozzle Overall Gross Thrust Coefficient.	82

LIST OF TABLES

Table		Page
I.	Selected Concepts for Detail Screening.	5
II.	Economic Ranking - High Payback 0-2 Years (New Engines, Medium Range, Medium Fuel Price, Minimum Fuel Analysis).	6
III.	Economic Ranking - Medium Payback 2-5 Years (New Engines Medium Range, Medium Fuel Price, Minimum Fuel Analysis).	7
IV.	Economic Ranking - Low Payback Over 5 Years (New Engines, Medium Range, Medium Fuel Price, Minimum Fuel Analysis).	8
V.	Estimated CF6 Fleet Fuel Savings (Medium Range, Minimum Fuel Analysis).	12
VI.	CF6 Engine with Improved Fan - Fuel Savings per Aircraft (Minimum Fuel Analysis, Cruise Δ SFC = 1.8%).	22
VII.	CF6 Engine with Improved Fan - Economic Assessment of Payback Period and Return on Investment for New Buy.	22
VIII.	CF6 Engine with Front Mount - Fuel Savings per Aircraft Minimum Fuel Analysis, Cruise Δ SFC = -0.1%).	33
IX.	CF6 Engine with Front Mount - Economic Assessment of Payback Period and Return on Investment for New Buy.	34
X.	CF6 Engine with High Pressure Turbine Aerodynamic Performance Improvement - Fuel Savings per Aircraft (Minimum Fuel Analysis, Cruise Δ SFC = -1.3%).	47
XI.	CF6 Engine with HP Turbine Aerodynamic Performance Improvement - Economic Assessment of Payback Period and Return on Investment for New Buy.	48
XII.	CF6 Engine with HP Turbine Roundness - Fuel Savings per Aircraft.	61
XIII.	CF6 Engine with HP Turbine Roundness - Economic Assessment of Payback Period and Return on Investment for New Buy.	61
XIV.	HP Turbine Active Clearance Control Fuel Savings per Aircraft (Minimum Fuel Analysis, Cruise Δ SFC = -0.7%).	66
XV.	CF6 Engine with HP Turbine Active Clearance Control Concept - Economic Assessment of Payback Period and Return on Investment for New Buy.	67

LIST OF TABLES (CONCLUDED)

Table		Page
XVI.	LP Turbine Active Clearance Control Fuel Savings per Aircraft.	76
XVII.	CF6 Engine with LP Turbine Active Clearance Control Concept - Economic Assessment of Payback Period and Return on Investment for New Buy.	77
XVIII.	CF6 Engine with Short Core Engine Nozzle - Fuel Savings per Aircraft for Internal Thrust Coefficient Improvement Only.	83
XIX.	CF6 Engine with Short Core Exhaust Nozzle - Economic Assessment of Payback Period and Return on Investment for New Buy and Internal Thrust Coefficient Improvement Only.	84
XX.	Performance Improvement Concepts - NASA ECI Program.	86

1.0 SUMMARY

The NASA sponsored Aircraft Energy Efficient (ACEE) Program was directed at reduced fuel consumption for commercial air transports. A major element was the Engine Component Improvement (ECI) Program which was directed at reducing fuel consumption of current commercial aircraft engines. The performance improvement part of the ECI Program was directed at developing engine components having performance improvement and retention characteristics which could be incorporated into new production and existing engines.

This effort was initiated with a feasibility analysis which identified performance improvement concepts and assessed the technical and economic merits of these concepts. The assessment considered airline acceptability, the probability of concept introduction into production by the 1980 to 1982 time period, and retrofit potential. The study was conducted in cooperation with Boeing and Douglas aircraft companies, and American and United Airlines. Based on the results of the feasibility analysis, seven performance improvement concepts were selected for development and ground testing. The concepts are listed below:

- New Fan
- New Front Mount
- HP Turbine Aerodynamic Improvement
- HP Turbine Roundness Improvement
- HP Turbine Active Clearance Control
- LP Turbine Active Clearance Control
- Short Core Exhaust Nozzle

The results of the development and testing indicated significant potential fuel savings. Four concepts (new fan, new front mount, HP turbine roundness, and short core exhaust nozzle) have already been introduced to airline service. The remaining three (HP turbine aerodynamic improvement, and the HP and LP turbine active clearance controls) may be introduced depending on market conditions and other factors. The total estimated fuel savings for the selected seven engine improvements amount to 7½ to 10½ billion liters (2 to 2 3/4 billion gallons).

This report summarizes the development work and ground testing and presents the major test results and an economic analysis for each concept.

2.0 INTRODUCTION

National energy demand has outpaced domestic supply creating an increased U.S. dependence on foreign oil. This increased dependence was dramatized by the OPEC oil embargo in the winter of 1973 to 1974. In addition, the embargo triggered a rapid rise in the cost of fuel which, along with the potential of further increases, brought about a changing economic circumstance with regard to the use of energy. These events, of course, were felt in the air transport industry as well as other forms of transportation. As a result of these experiences, the Government, with the support of the aviation industry, initiated programs aimed at both the supply and demand aspects of the problem. The supply problem is being investigated by looking at increasing fuel availability from such sources as coal and oil shale. Efforts are currently underway to develop engine combustor and fuel systems that will accept fuels with broader specifications.

Reduced fuel consumption is the other approach to deal with the overall problem. A long-range effort to reduce fuel consumption is to evolve new technology which will permit development of a more energy efficient turbofan or the use of a different propulsive cycle, such as a turboprop. Although studies have indicated large reductions in fuel usage are possible (e.g., 15 percent to 40 percent), any significant impact of this approach is about 15 years away. In the near term, the only practical propulsion approach is to improve the fuel efficiency of current engines. Examination of this approach has indicated that a 5 percent fuel reduction goal starting in the 1980 to 1982 time period was feasible for current commercial engines. These engines will continue to be significant fuel users for the next 15 to 20 years.

Accordingly, NASA sponsored the Aircraft Energy Efficient (ACEE) Program (based on a congressional request) which was directed at reduced fuel consumption of commercial air transports. The Engine Component Improvement (ECI) Program was the element of the ACEE Program directed at reducing fuel consumption of current commercial aircraft engines. The ECI Program consisted of two parts: engine diagnostics and performance improvement. The engine diagnostics effort was to provide information to identify the sources and causes of engine deterioration. The performance improvement effort was directed at developing engine components having performance improvement and retention characteristics which can be incorporated into new production and existing engines.

The performance improvement effort was initiated with a feasibility analysis which identified performance improvement concepts and then assessed the technical and economic merits of these concepts. This assessment included a determination of airline acceptability, the probability of introducing the concepts into production by the 1980 to 1982 time period, and their retrofit potential. The study was conducted in cooperation with Boeing and Douglas aircraft companies and American and United Airlines, and is reported in Reference 1.

Based on the results of this feasibility analysis, seven performance improvement concepts were selected for development and ground testing. The concepts are listed below:

- New Fan
- New Front Mount
- HP Turbine Aerodynamic Improvement
- HP Turbine Roundness Improvement
- HP Turbine Active Clearance Control
- LP Turbine Active Clearance Control
- Short Core Exhaust Nozzle

This report summarizes the development work and ground testing, and presents the major test results and an economic analysis for each concept. References 2 through 8 delineate the final reports for each concept. The performance improvement effort has also been reported in several NASA and technical society papers and conference publications. These are listed in References 9 through 19.

3.0 FEASIBILITY ANALYSIS

3.1 ANALYTICAL PROCEDURE

The purpose of the feasibility analysis was to identify engine/aircraft modification concepts which would provide reductions in fuel consumption commensurate with risk, customer acceptance and the airline economic guidelines.

The feasibility analysis was conducted in cooperation with the Boeing Commercial Airplane Company and the Douglas Aircraft Company as subcontractors. American Airlines and United Airlines reviewed the results of the analyses of both airframe companies, while Eastern Airlines and Pan American World Airways served as consultants to NASA to provide an overall assessment (Reference 1).

Concepts were initially identified by the contractors, and an initial review with a qualitative assessment was performed. On the basis of this assessment, an initial screening was performed by General Electric management, and a recommended disposition was submitted to NASA, the aircraft manufacturers, and the airlines for review. Following NASA approval, a more comprehensive screening process was initiated on a reduced number of performance improvement concepts (Table I).

Preliminary design studies were conducted as appropriate to define the desired evaluation parameters. Appropriate definition was provided to the General Electric Commercial Engine Programs Division to obtain pricing and maintenance data as well as production impact assessment. The required information was then submitted to the aircraft companies for economic analysis and an assessment of risk, aircraft impact and customer acceptance. The screening/ranking was then accomplished jointly and presented to NASA for review. Following NASA review and selection, technology development plans and proposals were then submitted for the selected improvement concepts.

3.2 RESULTS OF SCREENING STUDY

Results of the feasibility study are summarized in Tables II, III and IV in terms of payback period, Return On Investment (ROI), and fuel savings. The data shown are for new engines, the median mission range and mid fuel price, and for the minimum fuel operation analysis case of the mission study. The assumed median range and mid fuel prices, which are dependent on the aircraft/mission, are shown below:

Aircraft (Engine)	Mission	Median Range km (mi)	Mid Fuel Price ¢/Liter (¢/gal)
DC-10-10 (CF6-6)	US Domestic	1690 (1050)	12 (45)
DC-10-30 (CF6-50)	International	2735 (1700)	15 (55)
B-747-200 (CF6-50)	US Domestic	3640 (2150)	12 (45)

ORIGINAL PAGE IS
OF POOR QUALITY

Table I. Selected Concepts for Detail Screening.

Component	Concept	Performance Category	Engine Model Studied	Retrofit Potential	Estimated % sfc Reduction
Fan	Fan Improvement	I (1)	-6, -50	Moderate	1.6, 1.8
	Blade Aero Design				
	Lower Operating Line				
	Reduced Clearances				
	Fan OGV Redesign	I	-6, -50	Moderate	0.3
	Increased Fan Diameter	I	-50	Low	3.5
Compressor	Front Mount - Case Distortion	I/R (2)	-6, -50	Moderate	0.3
	Rotor/Stator Thermal Match	I/R	-50	Low	0.2
	Reduced Stator Bushing Leakage	R	-50	Low	0.1
	Improved Stage 1 Blade	I	-6, -50	High	0.1
	Dovetail Seals	I	-50	Moderate	0.1
	Blade Coatings	R	-6, -50	High	---
High Pressure Turbine	Roundness Control	I/R	-50	Moderate	0.4/0.8 (3)
	Frame/Nozzle Support				
	R150 Turbine Blades	I	-50	Moderate	0.7
	Aerodynamic Improvements	I/R	-6	Moderate	1.3/1.6 (3)
	CF6 Blades				
	Improved Seals				
	Reduced Exit Swirl				
	Cooled Cooling Air	I	-6	Low	0.6
	Active Clearance Control	I/R	-6, -50	Low	0.6
	"Hard" Blade Tips	I/R	-6, -50	High	---
Low Pressure Turbine	Active Clearance Control	I/R	-6, -50	Moderate	0.1, 0.3
	Improved Thermal Match				
	Temperature Distribution				
	Stage 1 Incidence	I	-50	High	0.1
	Reduced Leakage Interstage Seals	I	-50	Moderate	0.1
Nacelle	Long Duct Mixed Flow Nacelle	I	-50	Low	1.6
	Short Core Exhaust	I	-50	Moderate	1.0
	Vortaway - Vortex Suppressor	R	-6, -50	Moderate	0.2, 0.1 (3)
	Improved Nacelle System	I/R	-6, -50	Low	---
	Improved Aero				
	Reduced Leakage				
	Fire Shield Deletion				
	Optimized Cooling				
Controls	Modified Controls	R	-6, -50	Moderate	0.2/0.4 (3)
	FADEC	I/R	-6, -50	Moderate	0.3/0.5 (3)
Airframe	Cabin Air Recirculation (4)	I	-6, -50	---	0.7

NOTE: (1) I = Improvement
(2) R = Retention
(3) At 3000 hours
(4) Concept identified by Douglas and added to original concept list.

Table II. Economic Ranking - High Payback 0-2 Years (New Engines, Medium Range, Medium Fuel Price, Minimum Fuel Analysis).

Concept	Payback (Years)	ROI (%).	Fuel Savings (1000 Liters/yr/AC)
Fan Improvement (Blades and Stiffener)	1.5/1.2/0.8 (1)	67/85/123	507/541/670
Short Core Exhaust - 2% Drag Reduction (2) (DC-10-30)	--/0.01/--	--/8713/--	--/628/--
Fan Improvement (Blades Only)	1.6/1.5/0.9	65/67/112	420/352/439
HPT Aerodynamic Improvement	0.2/--/--	600/--/--	420/--/--
HPT Roundness Control (3)	--/0.7/0.9	--/145/111	--/269/299
Cabin Air Recirculation (DC-10-10)	1.6/1.2/--	64/87/--	201/219/--
Front Mount	0.6/0.5/0.6	165/201/166	91/95/117
Compressor Dovetail Seals	--/0.5/0.5	--/217/184	--/34/42
LPT Stage 1 Incidence	--/0.5/0.6	--/195/165	--/34/42

Notes: (1) DC-10-10/DC-10-30 /747-200
(2) For 2% Δ SFC
(3) At 3000 Hours

Table III. Economic Ranking - Medium Payback 2-5 Years (New Engines, Medium Range, Medium Fuel Price, Minimum Fuel Analysis).

Concept	Payback (Years)	ROI (%)	Fuel Savings (1000 Liters/yr/AC)
Long Duct Mixed Flow Nacelle - 70% Mixing Efficiency (DC-10-30)	--/3.8/-- (1)	--/26/--	--/1329/--
R150 HPT Blades	--/3.8/4.7	--/25/20	--/250/307
HPT Active Clearance Control - Variable Source Bleed (2)	--/4.4/--	--/21/--	--/156/--
LPT Active Clearance Control (2)	--/4.1/4.1	--/23/23	--/66.6/109
Vortaway - Vortex Suppressor	3.8/3.3/--	26/30/--	76/64/--

Notes: (1) DC-10-10/DC-10-30/747-200

(2) General Electric Assessment

Table IV. Economic Ranking - Low Payback Over 5 Years (New Engines, Medium Range, Medium Fuel Price, Minimum Fuel Analysis).

Concept	Payback (Years)	ROI (%)	Fuel Savings (1000 Liters/yr/AC)
Increased Fan Diameter (747-200)	-/-/8.2 (1)	-/-/9	-/-/1128
Long Duct Mixed Flow (2) Nacelle (747-200)	-/-/10.4	-/-/5	-/-/765
HPT Active Clearance Control-Variable Source Bleed	7.7/-/6.9	10/-/12	117/-/181
Cooled Cooling Air-Fuel/ Air Heat Exchanger	10.3/-/-	5/-/-	178/-/-
Cooled Cooling Air Air/Air Heat Exchanger	5.9/-/-	15/-/-	151/-/-
Compressor Rotor/Stator Thermal Match	-/8.5/9.6	-/8/6	-/53/64
Short Core Exhaust (747-200)	-/-/12.4	-/-/3	-/-/49
Reduced Stator Bushing Leakage	-/8.0/9.6	-/9/6	-/30/34
LPT Active Clearance Control	7.8/-/-	9/-/-	30/-/-

Notes: (1) DC-10-10/DC-10-30/747-200
(2) Advanced

The concepts as applied to a particular study aircraft were economically categorized by payback period. Table II shows the concepts with a high economic ranking and a payback period under two years; Table III shows the medium economic ranking concepts with a payback period of 2 to 5 years; and Table IV shows the economically low ranking concepts with a payback period over 5 years. The concepts, ranked in order of the fuel savings for each economic category, are also shown graphically in Figure 1. The shaded areas indicate the range of fuel savings dependent on the airplane application (DC-10-10, DC-10-30, and B-747-200). For example, the Fan Improvement (blades and stiffener) indicates a lower value (507) for the DC-10-10 and an upper value (670) for the B-747-200, as shown in Table II.

From the results of the technical and economic assessments, several concepts were judged to be sufficiently attractive for consideration for development. This consideration was based on SFC reduction, projected fuel savings, maintenance costs, payback period, airline acceptability, and the probability of introduction on new engines as well as retrofit.

Listed below are the engine concepts selected for further development along with the engine model studied:

- Fan Improvement, CF6-6 and CF6-50
- Front Mount, CF6-6 and CF6-50
- HPT Aerodynamic Improvements, CF6-6
- HPT Roundness Control, CF6-50
- HPT Active Clearance Control, CF6-6 and CF6-50
- LPT Active Clearance Control, CF6-6 and CF6-50
- Short Core Exhaust, CF6-50

The Cabin Air Recirculation concept, applicable to both the CF6-6 and CF6-50, was the only airplane modification studied. This concept was also judged attractive for further development.

As noted above, all but three of the selected concepts are directly applicable to both engine models. The Short Core Exhaust and the HPT Aerodynamic Improvement concepts apply only to one particular model because of specific configuration differences relative to the exhaust nozzle and the HPT. The HPT Roundness Control technology, however, is also applicable to the CF6-6 engine.

The fuel savings for the selected engine improvement concepts were calculated for an assumed production through 1990 using General Electric high and low market forecasts. This fuel savings estimate is based on an average engine life of 15 years and an average retrofit life of 7-1/2 years. The Fan Performance Improvement, Front Mount and HP Turbine Active Clearance Control concepts were applied to both engine models; the Short Core Exhaust, HP Turbine Roundness

ORIGINAL PAGE IS
OF POOR QUALITY

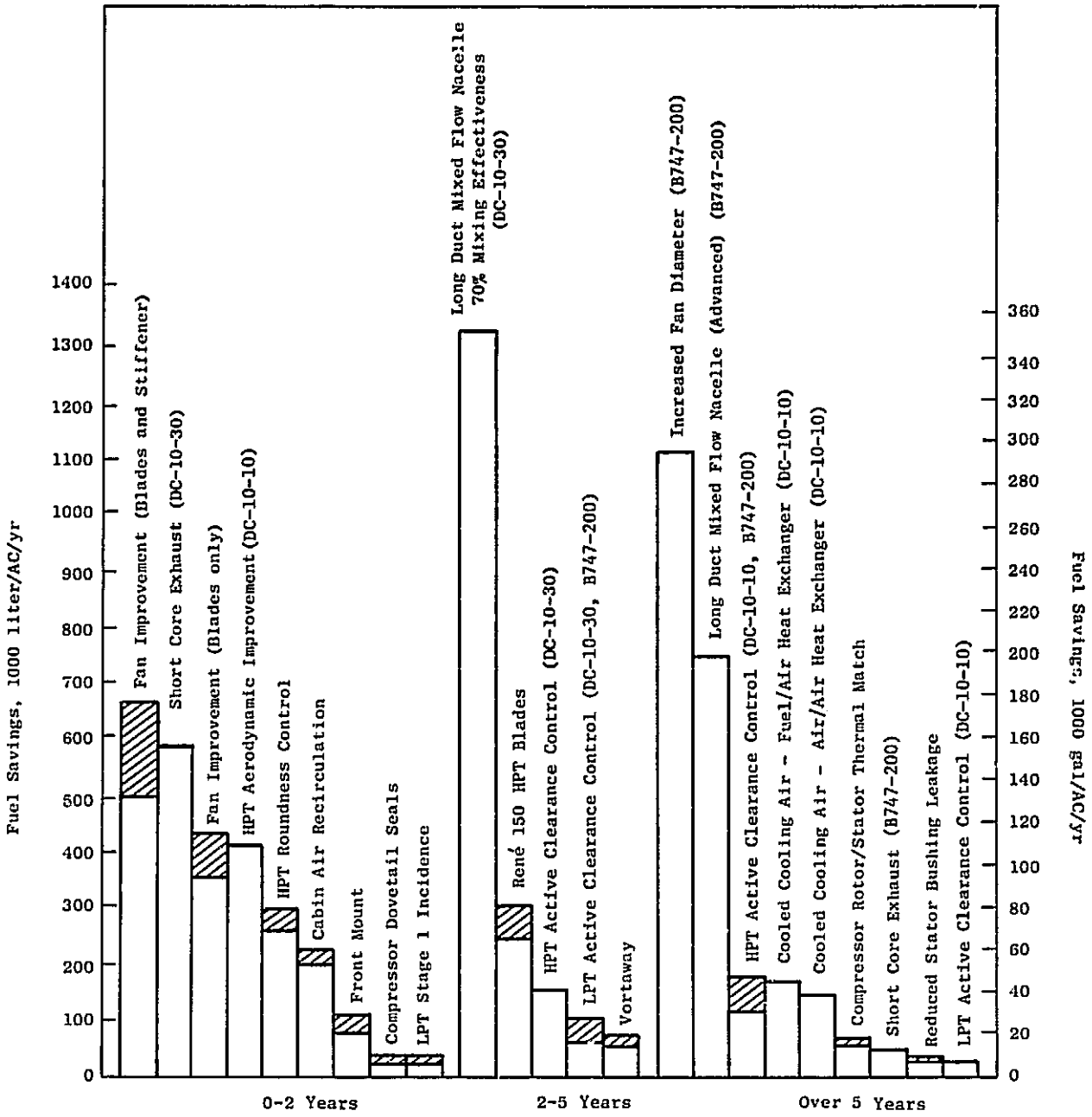

Note: Shaded area indicates range of fuel saving dependent on airplane application (DC-10-10, DC-10-30 and B747-200).

Figure 1. Concept Comparison, Fuel Savings Versus Payback (Median Range).

Control and LP Turbine Active Clearance Control were applied to only one engine model. The results are shown in Table V which lists the concepts in order of the fuel savings. The total estimated fuel savings for the selected seven engine improvements amount to 7-1/2 to 10-1/2 billion liters (2 to 2-3/4 billion gallons).

Table V. Estimated CF6 Fleet Fuel Savings (Medium Range, Minimum Fuel Analysis).

Concept	Engine Application	Fuel Savings In Million Liters (Gallons)	
		High Market Forecast	Low Market Forecast
Fan Improvement (Blades and Stiffener)	-6, -50	3997 (1056)	2861 (756)
Short Core Exhaust	-50	1730 (457)	1173 (310)
HPT Roundness Control	-50	1506 (398)	1207 (319)
HPT Aerodynamic Improvement	-6	1120 (296)	855 (226)
HPT Active Clearance Control	-6, -50	916 (242)	613 (162)
Front Mount	-6, -50	799 (211)	590 (156)
LPT Active Clearance Control	-6, -50	348 (92)	231 (61)
TOTAL		10,416 (2752)	7,530 (1990)

4.0 NEW FAN

4.1 DESCRIPTION OF CONCEPT

Initially, the new CF6 fan concept consisted of improved fan blade aerodynamic design, a 1.5 mm (0.06 in.) reduction in fan tip clearance due to a new fan case stiffener, and optimization of the fan cruise operating line. Together, these improvement items offered a potential reduction in CF6-50 engine SFC at cruise of 1.8 percent. This potential SFC reduction is achieved with a modest weight increase of 13 kg (29 lb.) and a forward center of gravity shift of 0.8 mm (0.3 in.). A maintenance cost reduction (lower DOC) is projected, resulting from the lower turbine gas temperatures that accompany the improved engine performance. An improvement in cruise SFC of about 1.6 percent was estimated for the new fan on the CF6-6 engine.

The improvement in aerodynamic performance of the fan is achieved largely by way of a more forward throat location (more camber in the forward portion of airfoil) and aft location of the part-span shroud, resulting in an improvement in the entire chordwise and spanwise efficiency. Reduced fan tip clearances, further improving performance, are achieved by stiffening the fan case. Optimization of the cycle is achieved by adjusting the fan operating line so that it passes through the region of peak efficiency (Reference 2).

Fan Aerodynamic Design

An analytical study of the detailed aerodynamic flow characteristics was made of the CF6 fan versus the first stage with part-span shroud of a two-stage NASA fan. This study indicated areas of potential efficiency improvement. Procedures were developed which permitted the assessment of spanwise blockage effects on airfoil surfaces (such as the part-span shroud). This assessment revealed that throat margins in the vicinity of the shroud were more subcritical than initially considered. A comparative assessment of the NASA part-span shroud fan blade revealed that throat margins in the shroud vicinity were not subcritical. It was deduced that the NASA design obtained the throat margin in two ways. First, the passage throat was forward relative to the current CF6 fan. A more forward throat location was achieved in the redesign by putting more camber in the forward portion of the airfoil. Second, the part-span shroud was located aft toward the trailing edge of the airfoil resulting in reduced throat blockage. In turn, the leading edge of the shroud operates in a region of lower Mach number flow within the passage. Removal of the subcritical throats from the redesigned fan eliminated the large radial flow shift and permitted the blade to operate as designed. The entire spanwise efficiency level increased with little effect on the shroud wake. Moving the passage throat forward, by putting more camber forward in the airfoil, unloaded the trailing edge and resulted in more effective camber. A photograph of the original production and the improved CF6 fan blade is presented in Figure 2.

In addition to the above redesign considerations, additional camber was put into the airfoil to raise the peak efficiency at pressure ratios corresponding to the current CF6-50 cruise operating level throughout the speed range.

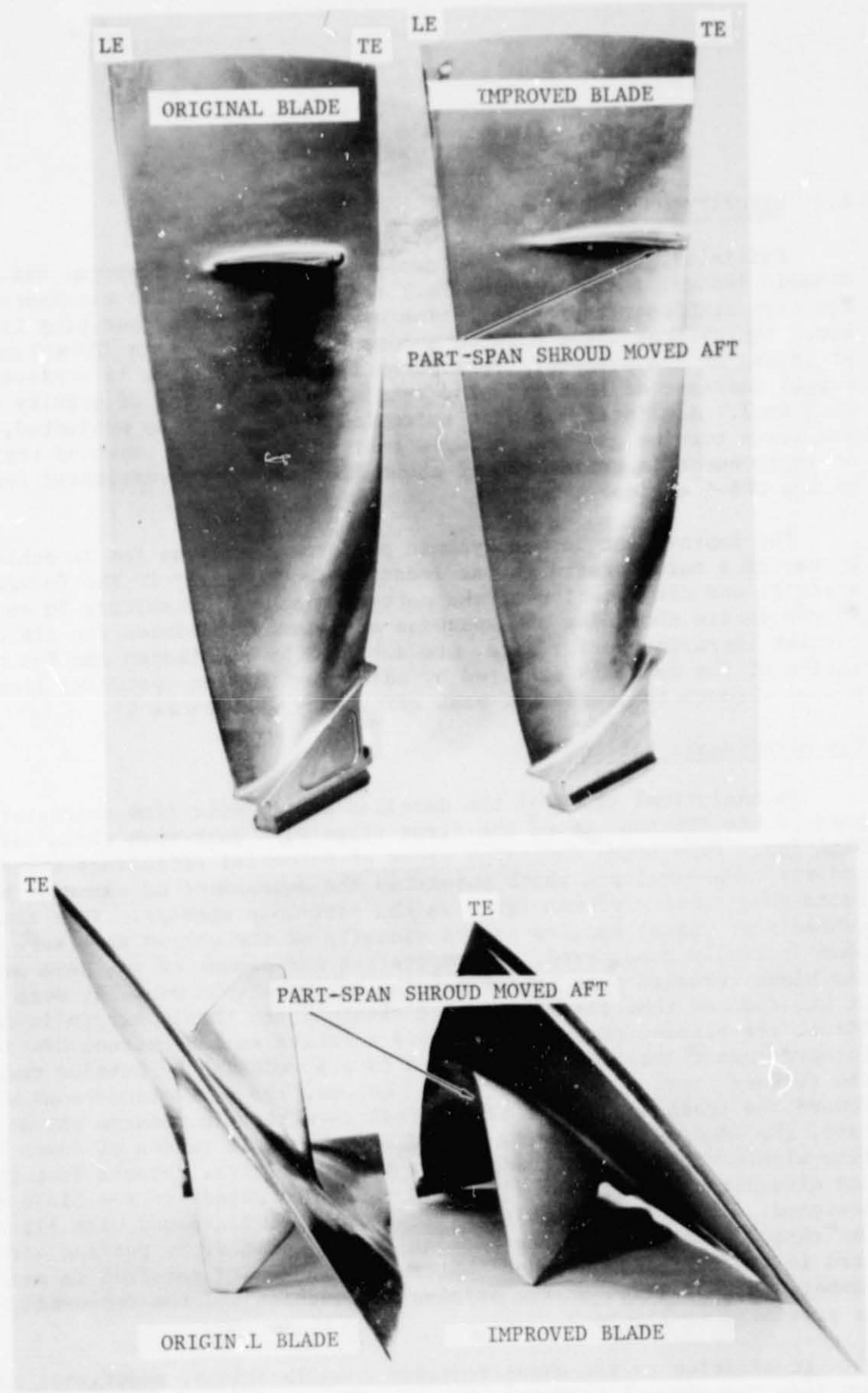

Figure 2. CF6 Original Production and Improved Fan Blades.

ORIGINAL PAGE IS
OF POOR QUALITY

Fan Mechanical Design

The most obvious change in the mechanical design of the improved performance blade is the movement of the part-span shroud aft on the airfoil. Some small but important differences between the original and improved part-span shroud designs are (1) a 41° pressure-face angle with the engine axis for the redesign versus a 39° angle for the original design; this change corresponds with the stagger angle change of airfoil at its shroud section, and (2) a larger radius blending to airfoil for improved support and increased stiffness for the redesign.

Other features of the shroud design are nearly identical, such as span location, weight, thickness and cross-sectional streamline shape.

The original and improved fan blades have identical design chord and thickness. However, the orientation angle of the chordline (complement of stagger angle) of the improved fan blade is more open over the inner portion of the span and about 1.5° more closed in the outer tip portion. During the fan performance tests, the blade part-span shroud interlocks were subsequently modified (restaggered) to close the running blade stagger angle by about 1.5° at the part-span shroud to fine-tune the fan-engine match.

The camber angle is larger for the redesigned airfoil of the improved fan than for the original design. The dovetail is identical for the redesign to facilitate interchangeability by sets and thereby take advantage of the improved performance with minimum hardware change.

Fan Case Stiffener Ring

The radial clearance reduction potential relative to the original production configuration was 1.5 mm (0.060 in.), based on observation of revenue service hardware and analysis, provided fan casing roundness could be improved. This clearance reduction has a theoretical payoff of 1.1 points in fan efficiency, however, in order to take advantage of this payoff, it was concluded that the fan case must be stiffened to raise the critical interaction frequencies of the fan rotor and fan case above the maximum operating fan speed. This was accomplished by a fan case stiffener ring shown in Figure 3.

The original CF6 fan casing tip shroud was open cell aluminum honeycomb. During the performance testing, the tip shrouds were modified by installing microballoon epoxy in the honeycomb and grinding it smooth.

Fan Operating Line

Cycle optimization studies had indicated that the fan operating line of the improved fan would have to be lowered for improved efficiency at cruise operation. This was to be accomplished by trimming the fan nozzle as shown in Figure 4. The performance tests demonstrated that the improvements for an increase in fan exit area were not sufficient to warrant a nozzle area change and this aspect of the concept was not pursued.

(a) Photograph

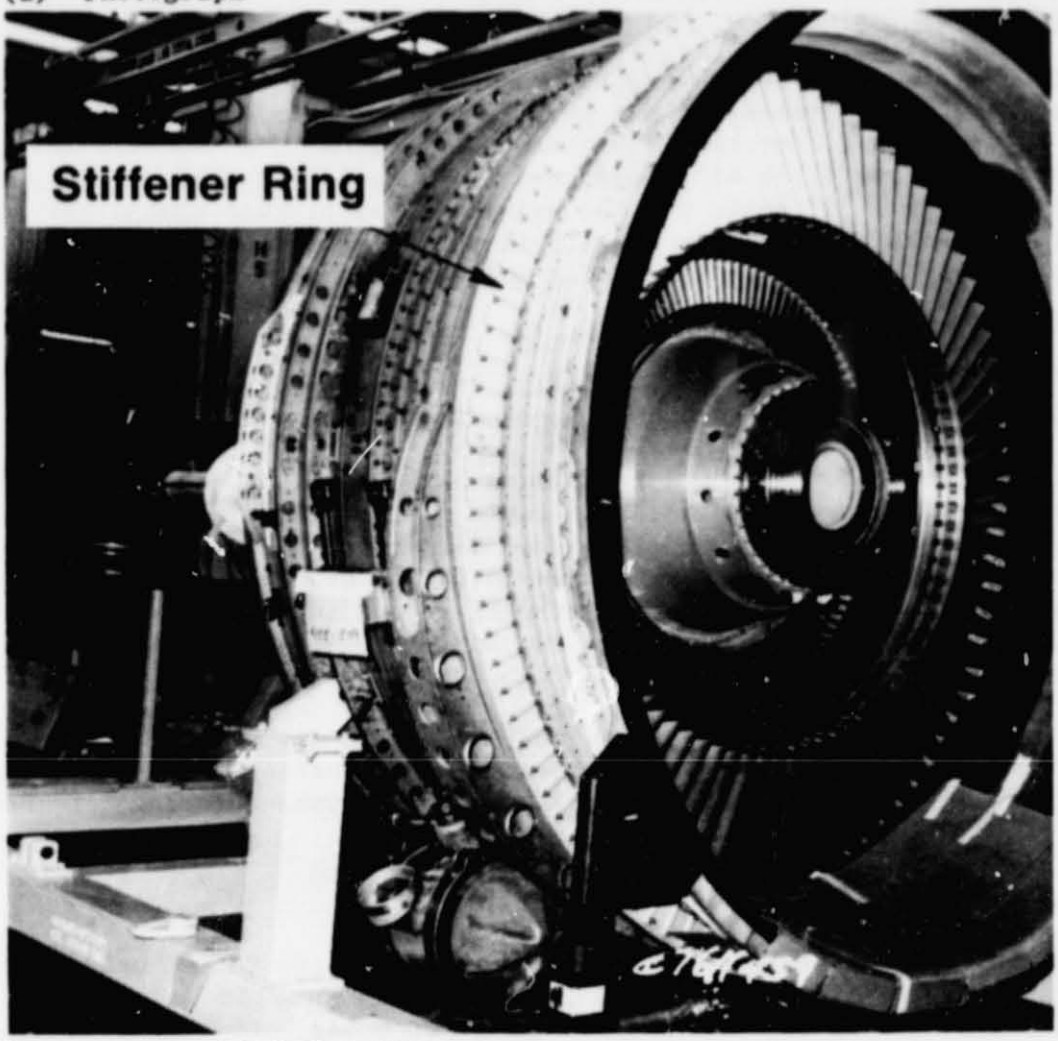

(b) Segmented Web Details

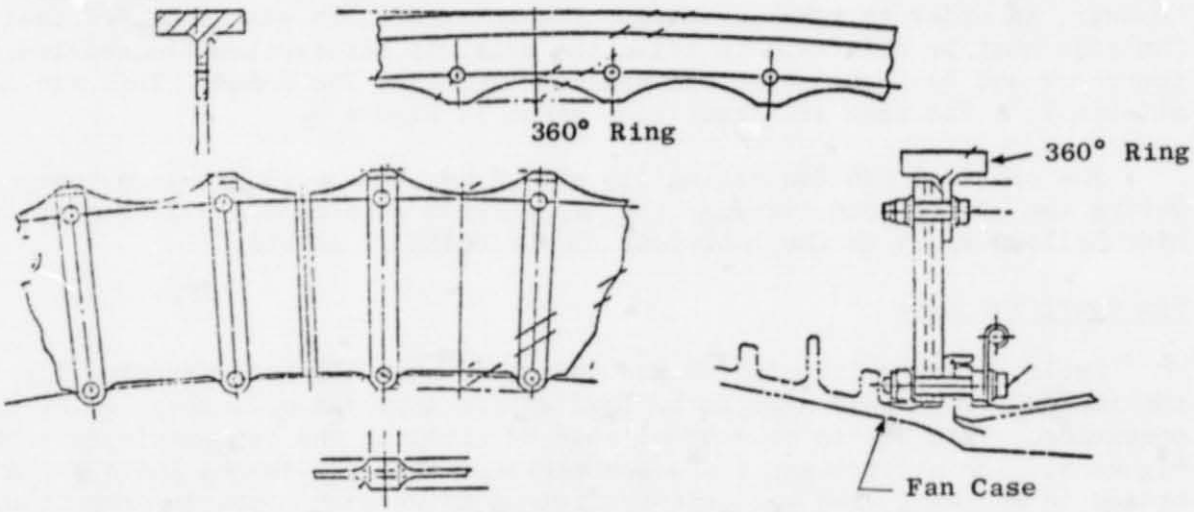

Figure 3. CF6-50 Fan Case Stiffener.

ORIGINAL PAGE IS
OF POOR QUALITY

ORIGINAL PAGE IS
OF POOR QUALITY

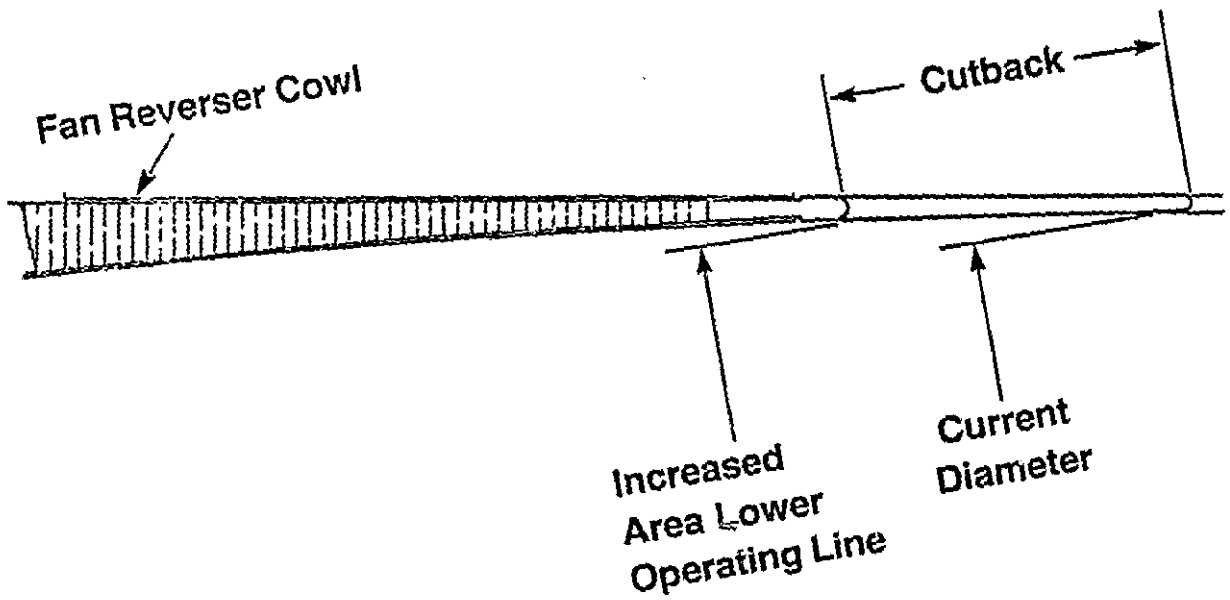

Figure 4. Increased Fan Nozzle Area.

4.2 SUMMARY OF TEST RESULTS

The new CF6 fan program was a 20-month effort that included component and full-scale engine testing and monitoring of aircraft flight tests. Component tests consisted of a model fan rotor photoelastic stress test and a full-sized fan blade bench fatigue test. CF6-50 engine testing included back-to-back performance and acoustic tests, a power management test, a cross-wind test, and a cyclic endurance test (Reference 2).

Fan Rotor Photoelastic Test

The photoelastic test of a 0.6 scale fan rotor with the improved fan blades showed no life limiting stresses, although some local stress levels were found to be higher than those determined by other means. In almost every instance, the finite element analysis predicted lower stresses than the photoelastic results. In general, the stress distributions were very similar to the ones obtained from finite element analysis. Evaluation of three different shank designs indicated that the standard half-pocket shank was a good compromise for lightweight and low stress. Improved stress freezing procedures were developed for photoelastic testing of large-size fan blades due to some unforeseen problems which were encountered, such as shroud "shingling", gravity load effects, and model defects.

Fan Blade Bench Fatigue Test

Bench fatigue test results with both the round bar test specimens and the finished airfoil demonstrated that the new fan blade design is equal in fatigue margin to the current CF6 fan blade. The current CF6 fan blade has never experienced a fatigue failure in over 24 million flight hours. The fatigue testing demonstrated that the new fan blade has no high stress risers that degrade the fatigue strength of the design. A substantial margin exists between measured engine stresses and the fatigue capability of the design.

Engine Crosswind Test

Crosswind testing demonstrated that the new fan blade has similar crosswind/distortion characteristics to the original CF6 fan blade. Results indicate that the new fan blade can operate successfully without exceeding vibratory stress limits with both the DC-10-30 and B747 inlets at allowable takeoff crosswinds up to 35 knots.

Engine Performance Test

CF6-50 engine back-to-back sea level and simulated altitude performance tests demonstrated the predicted altitude cruise SFC improvement of 1.8 percent for the improved fan compared to the original fan. Over 20 engine tests were conducted in order to verify the predicted performance improvement. The final new fan package consists of:

- Improved fan blades restaggered to close blade about 1.5° at part-span shroud
- Reduction in fan tip clearance of 2.5 mm (0.100 in.)

- Fan case stiffener

- Smooth casing tip shroud (microballoons in open cell honeycomb)

Fan tests with tip rub buttons indicated that the fan case stiffener provided a significant improvement in fan casing roundness compared to the unstiffened case. This permits reduced operating fan tip clearances and improved fan efficiency. Fan efficiency increased 4.2 percent for the improved fan blade with 1.5 mm (0.060 in.) reduced tip clearances, which was generally consistent with predictions (Figure 5). Restaggering the blade about 1.5° and reducing tip clearance an additional 1.0 mm (0.040 in.) resulted in a slight increase in fan efficiency at lower flow (cruise power range) and a slight decrease in fan efficiency at high flow (takeoff power).

The 1.0 percent increase in fan nozzle exit area did not provide a measurable improvement in cruise fuel consumption; and consequently, no change in the fan exit area is utilized in the new fan package, as finally developed.

Engine Acoustic Test

Back-to-back engine acoustic tests established that the use of the improved fan in the CF6-50 engine in the DC-10-30, B747-200 and A300B aircraft, or in the CF6-6 engines of the DC-10-10 aircraft, will have noise characteristics comparable to the original production fan. The FAA has accepted the acoustic equivalency of the two fans. The improved fan offers a significant reduction in multiple pure tones, or buzz saw noise, compared to the original fan and should significantly reduce aircraft passenger compartment noise levels during aircraft takeoff and initial climbout. Use of the original CF6 fan blade with a reduced fan tip clearance and a smooth casing tip shroud will likewise have comparable community noise exposure to the original production fan.

Engine Power Management Test

Power management tests of the CF6-50 engine with the improved fan defined the fan speed/engine thrust relationship for the DC-10-30, B747-200, and A300B aircraft. Full-scale fan nozzle thrust and flow coefficients were determined from instrumented engine ground tests and correlated with aircraft flight tests.

Engine Cyclic Test

The CF6-50 engine with the improved fan blades and fan case stiffener successfully completed over 1000 "C" cycles of cyclic endurance testing. This amounts to about 3500 hours of airline service. The blades and stiffener were in excellent condition without any cracks or signs of distress. A separate blade/shroud rub test indicated no evidence of blade casing interaction due to heavy rubs into the smooth microballoon tip shroud material.

Production Engine and Aircraft Flight Performance Tests

As a direct result of the above tests and additional General Electric-sponsored efforts, the development and certification of the improved fan were continued, and the fan was introduced into airline service. DC-10,

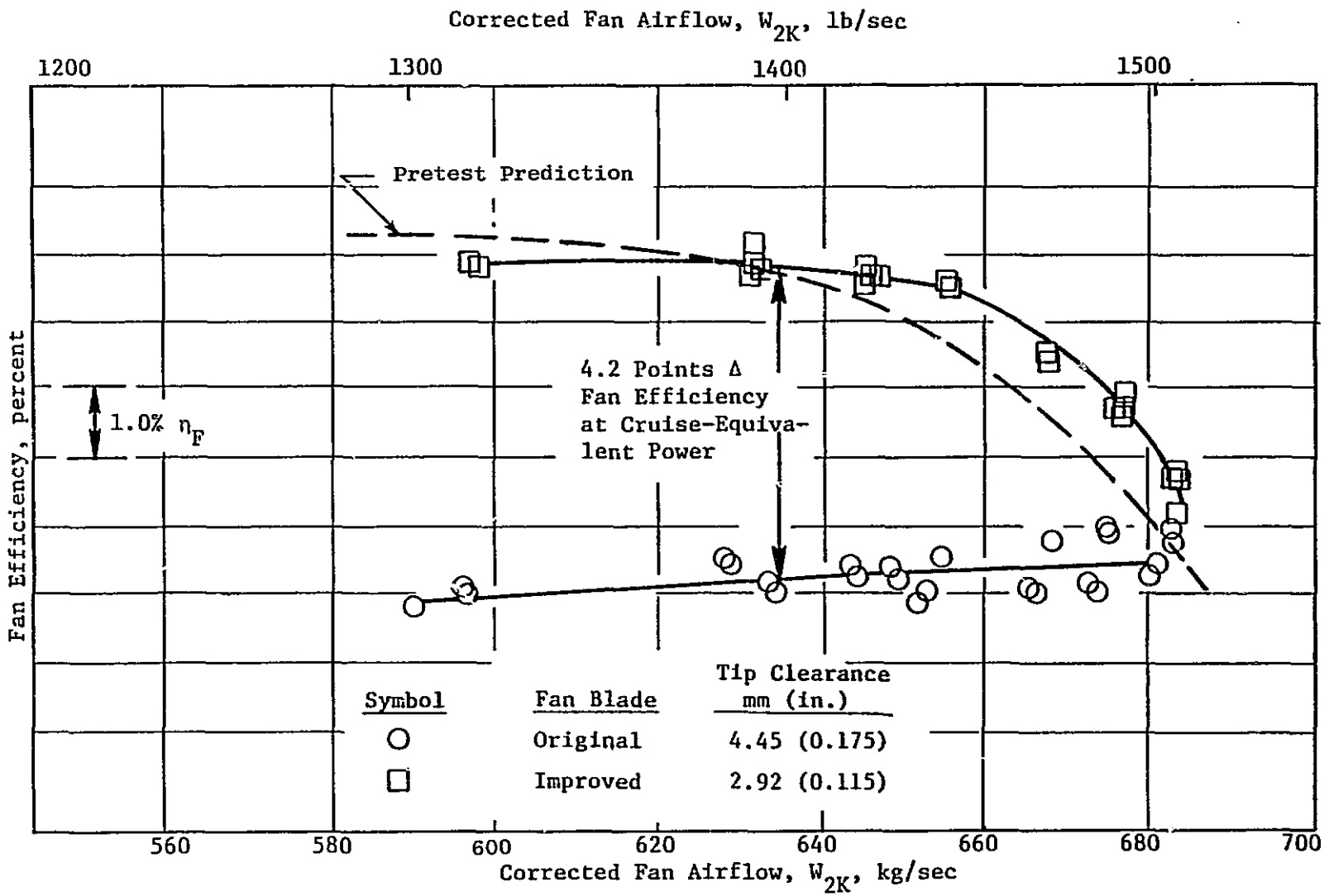

Figure 5. CF6-50 Engine Fan Efficiency Improvement Versus Fan Airflow for Original and Improved Fans, Sea Level Static.

ORIGINAL PAGE IS
OF POOR QUALITY

B747, and A300B aircraft flight tests were completed. Subsequent SLS production engine and aircraft flight tests confirmed the cruise SFC improvement of 1.8 percent for the improved fan. The improved fan has been certified by the FAA for use in the CF6-50C2/E2 engines and is now in commercial service on the Boeing 747-200, Douglas DC-10-30, and Airbus Industrie A300B aircraft.

Subsequent production engine tests of CF6-6K engines with the improved fan also demonstrated an improvement in cruise SFC of 1.8 percent. The improved fan has also been certified by the FAA for use in the CF6-6K engine.

4.3 ECONOMIC ASSESSMENT

The Fan Performance Improvement concept was evaluated by Boeing and Douglas during the Feasibility Analysis under Task 1 of this program (Reference 1). The initial new fan configuration consisted of improved fan blades, a fan case stiffener, a 1.50 mm (0.060 in.) reduction in fan tip clearance, and fan nozzle area change. This configuration was predicted to have a cruise SFC improvement of 1.8 percent for the CF6-50 engine on the DC-10-30 and B747-200 aircraft and a cruise SFC improvement of 1.6 percent for the CF6-6 engine on the DC-10-10 aircraft.

Back-to-back sea level static engine performance tests demonstrated the predicted cruise SFC improvement of 1.8 percent with restaggered improved fan blades, the fan case stiffener, a smooth casing tip shroud, and the fan tip clearance reduced by 2.5 mm (0.100 in.). An additional improvement of 0.2 percent was obtained for a modification to the compressor variable stator vane (VSV) schedule. Flight tests of the improved fan with reduced clearance and a modified main engine control (closed stator vane schedule) conducted by Airbus Industrie, Boeing and Douglas on the A300B, B747-200 and DC-10-30, respectively, substantiated an improvement in excess of 2 percent in cruise SFC throughout the normal cruise flight regime.

The cruise SFC improvement of 1.8 percent for the CF6-50 and the CF6-6 engines due to the fan performance improvement results in the block fuel savings per aircraft shown in Table VI for the minimum fuel consumption mission analysis. Block fuel savings increase with increased range for all three aircraft. A 2.0 percent block fuel savings is projected for a new CF6 engine with the longest U.S. domestic and international mission ranges. The estimated annual fuel savings per aircraft for the above block fuel savings are also shown in Table VI, and indicates an annual fuel savings up to 1.37 million liters (0.36 million gallons) per aircraft.

Economic assessment of payback period and return on investiment (ROI) is summarized in Table VII for the medium international fuel price of 14.53¢/l (55¢/gal) for the DC-10-30 and the medium domestic fuel price of 11.89¢/l (45¢/gal.) for the DC-10-10 and the B747-200. Calculations indicate that the payback period for airlines to recover costs for the improved fan on a new CF6 engine is from 0.8 to 1.4 years.

The new fan package has retrofit potential on an attrition basis. Such a retrofit requires new fan blades, a fan case stiffener, a new fan casing tip shroud, piping changes near the new fan case stiffener, and changes in engine power management.

Table VI. CF6 Engine with Improved Fan - Fuel Savings per Aircraft (Minimum Fuel Analysis, Cruise Δ SFC = -1.8%).

Aircraft (Engine)	Range		Block Fuel Savings/Aircraft		Annual Fuel Savings/Aircraft	
	km	miles	kg	%	ℓ/AC/yr	gal/AC/yr
DC-10-10 (CF6-6)	645	400	-134.2	-1.7	380,700	100,575
	1690	1050	-294.0	-1.8	546,500	144,585
	3700	2300	-631.8	-2.0	624,000	164,861
DC-10-30 (CF6-50)	805	500	-104.3	-1.1	270,400	71,440
	2735	1700	-412.8	-1.6	503,000	133,052
	6275	3900	-1157.6	-2.0	1,013,200	267,688
B747-200 (CF6-50)	770	480	-123.0	-1.1	365,600	96,590
	3460	2150	-712.0	-1.7	669,900	176,986
	6195	3850	-1497.0	-2.0	1,369,600	361,849

Table VII. CF6 Engine with Improved Fan - Economic Assessment of Payback Period and Return on Investment for New Buy.

(Medium Range, Medium Fuel Price, Minimum Fuel Analysis, Cruise Δ SFC = -1.8%)

Aircraft (Engine)	Fuel Price ¢/l (¢/gal)	Payback Period, years	ROI, %
DC-10-10 (CF6-6)	11.89 (45) (Domestic)	1.4	73
DC-10-30 (CF6-50)	14.53 (55) (International)	1.2	85
B747-200 (CF6-50)	11.89 (45) (Domestic)	0.8	123

5.0 NEW FRONT MOUNT

5.1 DESCRIPTION OF CONCEPT

General Electric has previously recognized the performance impact of local engine deflections and has conducted analytical and component tests to assess the problem and define potential solutions. The work, related to the compressor, progressed to the point where a new front mount design, having the potential for reducing local compressor case deflections, was defined and prototype mounts were fabricated. Analytical predictions of the potential reduction in deflections were translated into a compressor performance improvement. This improvement was estimated to offer a reduction in engine specific fuel consumption of 0.3 percent and a reduction in exhaust gas temperature of 3.5° C. A modest increase in engine weight of 4.5 kg (10 lb.) was predicted for the new front mount (Reference 3).

The mounting system for the CF6 engine is illustrated by the typical wing installation shown in Figure 6. The engine and nacelle are attached to the wing pylon by a front and rear mount; the front mount is designed to carry all thrust and axial inertia loads together with side and vertical loads, while the rear mount carries side load, vertical load, and rolling moment. The front mount to pylon joint is fully clamped, which results in secondary redundant moments about the pitch, roll and yaw axes.

Analysis and component testing of the original front mount system has shown that the major portion of the axial thrust load is carried by the pin-ended rigid link which connects the front mount to the fan frame 12 o'clock midstrut casting clevises (Figure 7). It was also shown that the clevis support beams, which connect the clevis to the HPC case flange, transmit large radial and axial point loads to the compressor casing. These point loadings result in localized compressor case distortions which, when combined with the engine casing "backbone" bending deflections, require larger-than-desired compressor blade-to-case clearances in order to eliminate rotor rubs. Further, aircraft certification of the higher thrust 244,650 N (55,000 lb.) CF6-50C1 and CF6-50E engine configurations has indicated more extensive compressor rotor rubs through Stage 11 than previously observed. The original front mount system, at these higher rated thrust loads, would require a further increase in blade clearances with attendant losses in performance and stall margin, in order to eliminate rotor rubs.

The basis of the reduction in deflection due to the local effect is illustrated in Figure 8. Curve (a) shows a typical exaggerated cardioid deflection curve obtained from a single point load application typical of the single center link original front mount; and Curve (b) illustrates the effect of splitting the single point load into two loads of half the intensity located at 30° on each side of the center point. Combining the half intensity load deflection results in the single curve of greatly reduced deflection amplitude shown by the solid line.

Based on this effort, a new front mount system was designed. The new front mount applies the engine thrust reaction at two points ±30° from the top vertical and reacts engine vertical and side forces with a series of links connected tangentially to the compressor casing forward flange (Figure 9).

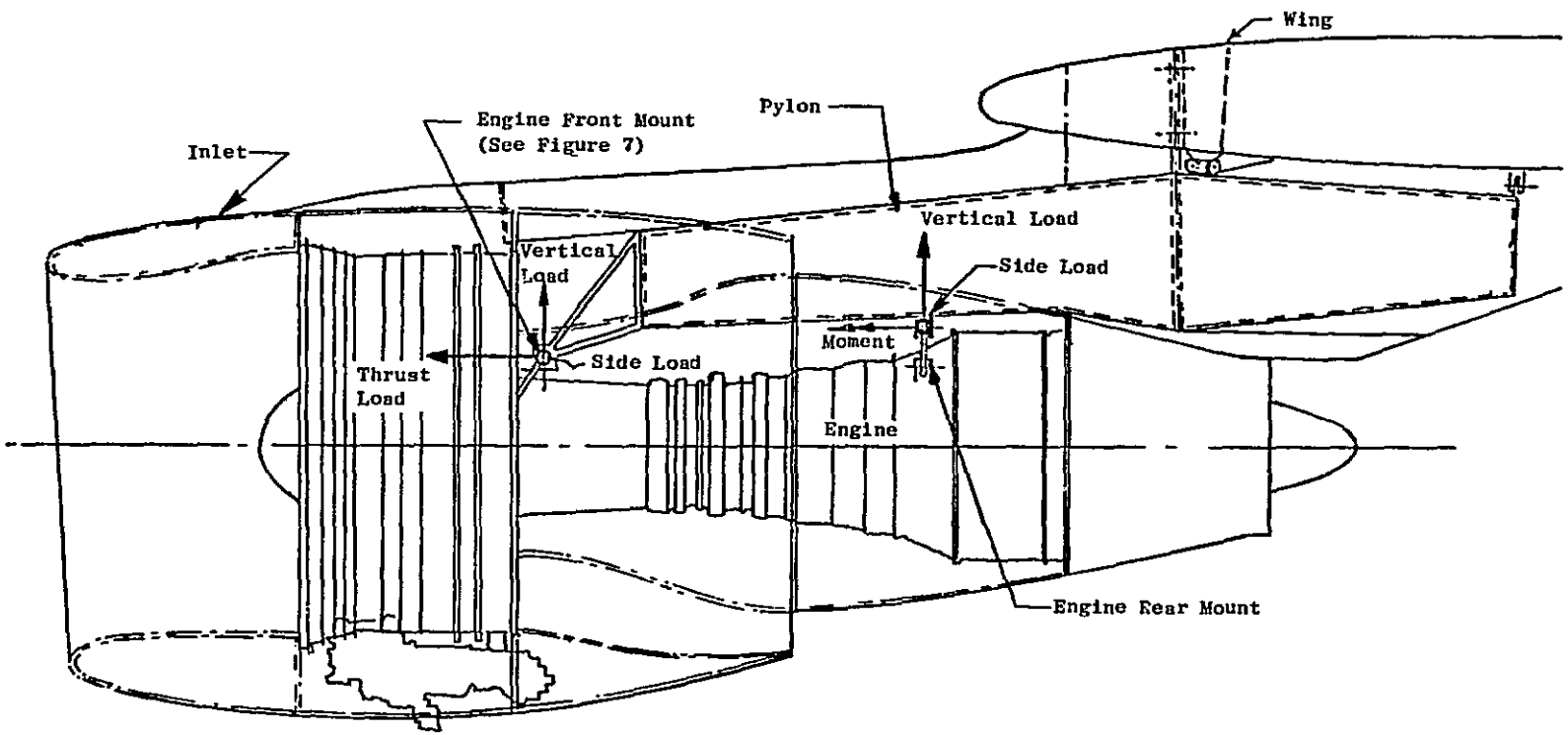

Figure 6. Typical Engine-Nacelle-Pylon-Wing Installation Showing Front and Rear Engine Mounts and Load Paths.

ORIGINAL PAGE IS
OF POOR QUALITY

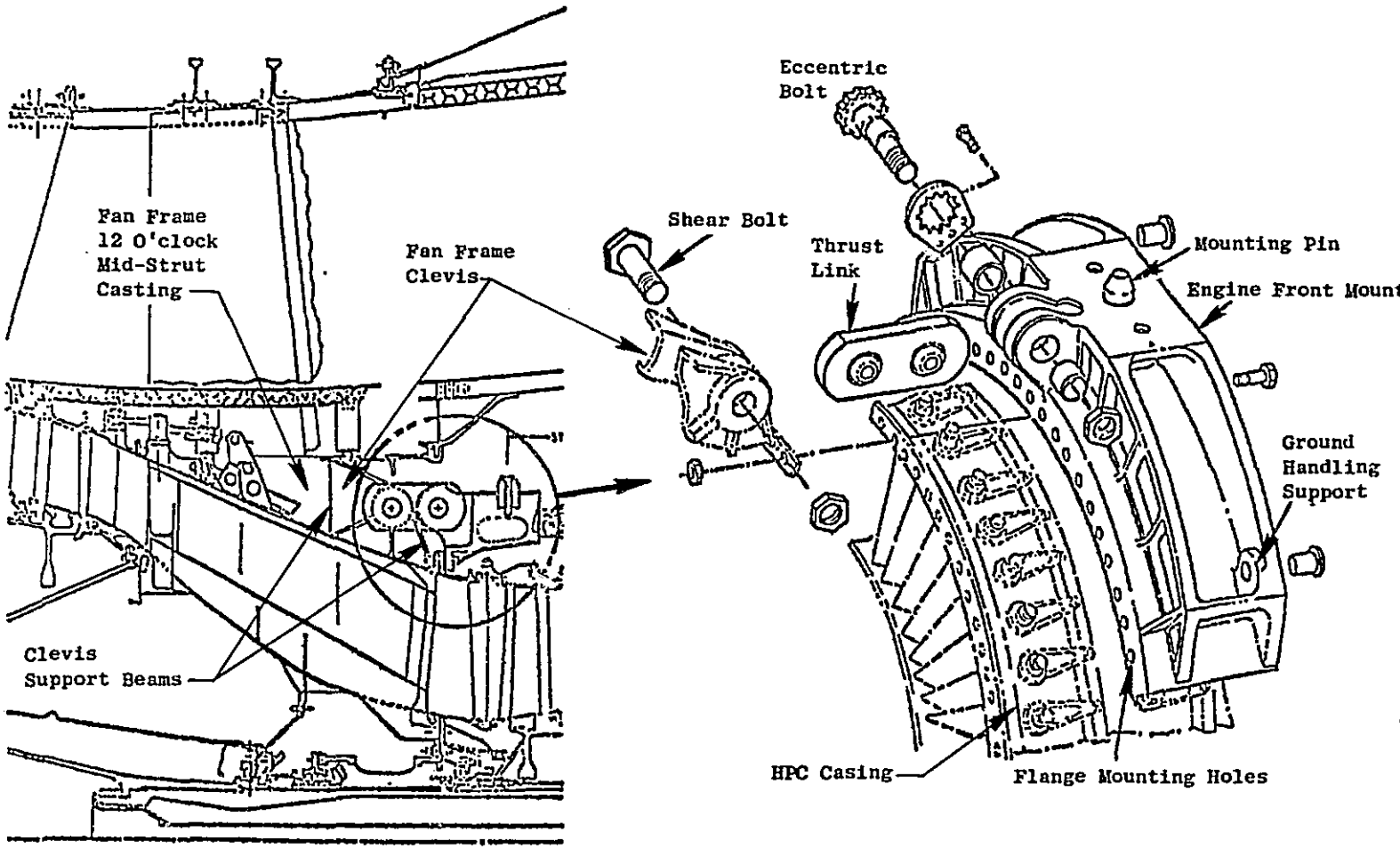

ORIGINAL PAGE IS
OF POOR QUALITY

Figure 7. Original Front Mount System.

ORIGINAL PAGE IS
OF POOR QUALITY

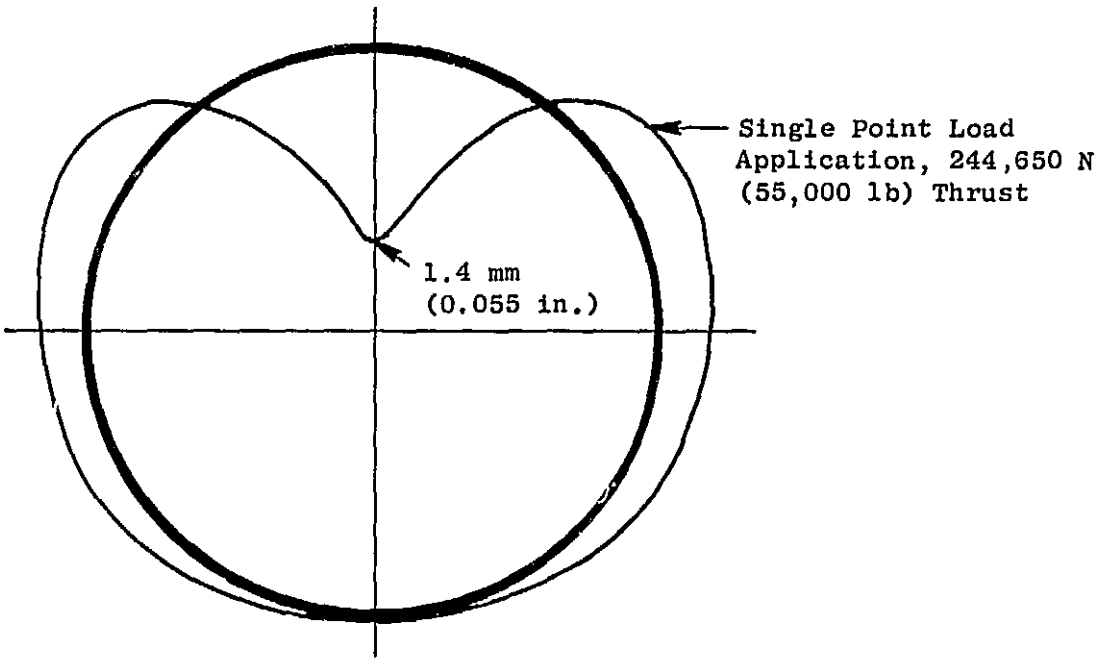

(a) Original Front Mount with Single Point Load Application

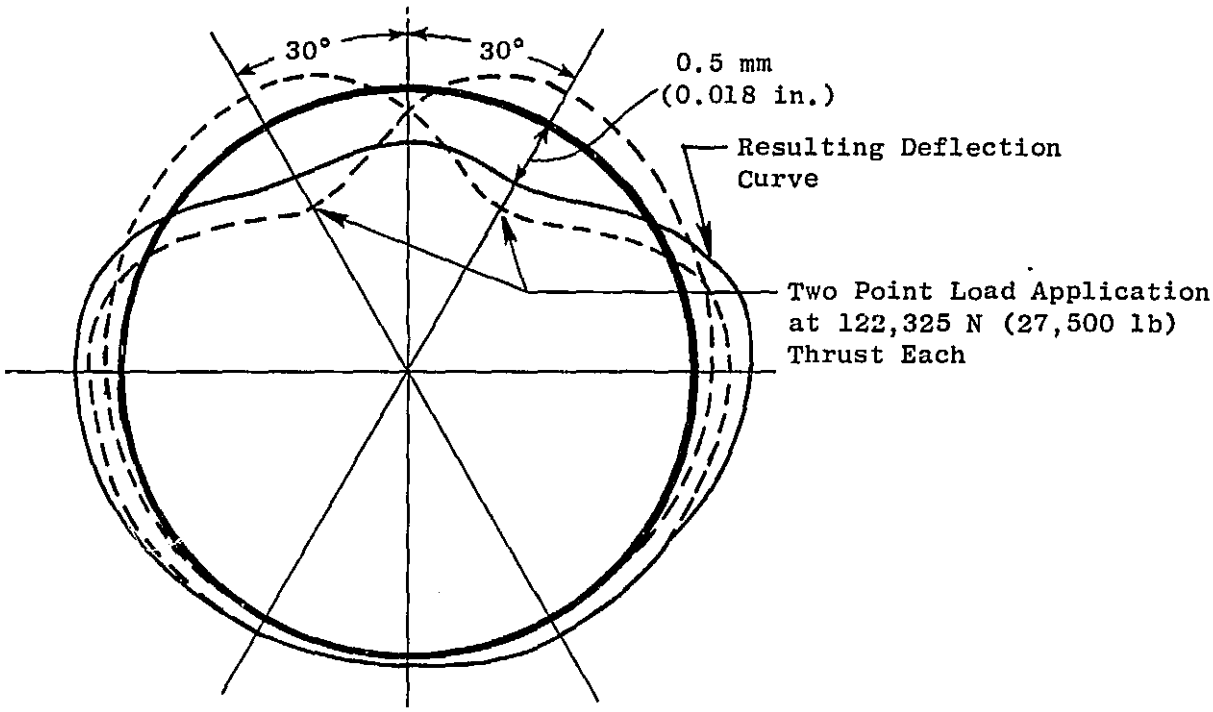

(b) New Front Mount with Two Point Load Application

Figure 8. Original and New Front Mounts, HPC Casing Radial Deflection Estimated Effect of Two Point Load Application at Max. Static Thrust (Zero G).

ORIGINAL PAGE IS
OF POOR QUALITY

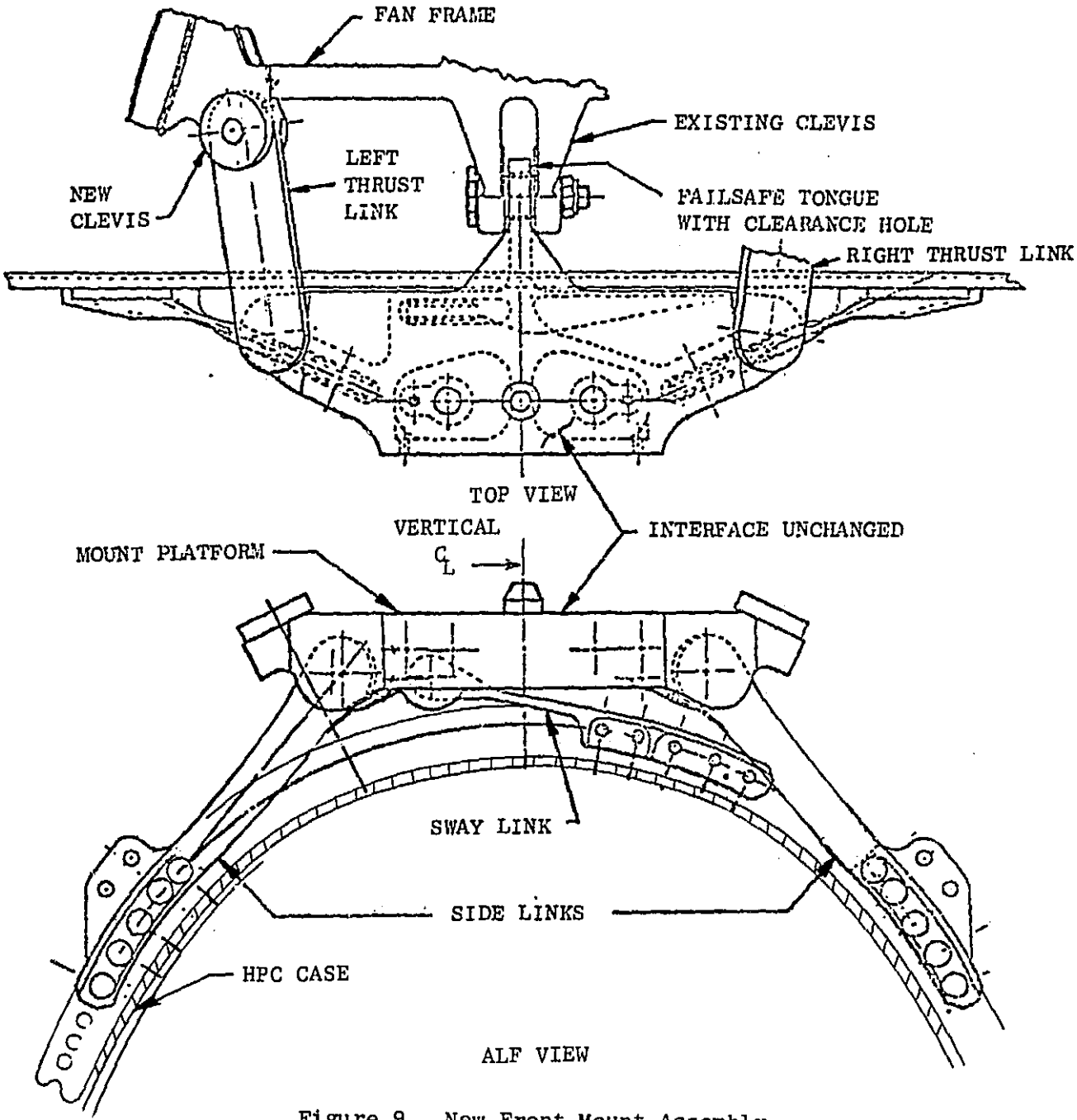

Figure 9. New Front Mount Assembly.

5.2 SUMMARY OF TEST RESULTS

The new front mount reduced the induced point loads in the high pressure compressor (HPC) casing, resulting in a decrease in localized case distortion. This allows the compressor to operate with reduced blade-to-case tip clearances, which improved HPC efficiency and overall engine performance (Reference 3).

The New Front Mount Program included a fatigue life analysis, correlation of analytical and empirical stress and deflection data, material fatigue tests, and component stress, deflection/distortion, and low cycle fatigue (endurance) tests. Contractor-funded engine tests and aircraft flight tests with the new front mount were also monitored.

A brittle lacquer crack development technique identified critical stress areas of the new front mount hardware. In the deflection/distortion tests, the new front mount reduced the maximum radial deflection at each stage of the HPC case due to the simulated flight loads. Figure 10 shows the deflections for the maximum static thrust condition for Stage 3. With the titanium HPC case, the maximum radial deflection was reduced 29 percent for the takeoff at rotation condition and 42 percent for the maximum static thrust condition. With the new front mount and the steel HPC case, a 33 percent and 41 percent reduction in the maximum radial deflection were measured under the same corresponding loads (Figures 11 and 12). However, the predicted HPC clearance improvement of 0.66-0.78 mm (0.026-0.031 in.) due to the new front mount was not fully realized. Preliminary predictions were based on early back-to-back tests conducted with a high thrust load, a zero G down load, and with a rather flexible engine configuration. Subsequent tests were conducted with a lower applied maximum thrust load, a 1G down load and the actual DC-10 wing pylon, inlet and fan reverser. This provided a stiffer and more realistic baseline engine installation, which reduced the radial deflection with the original front mount, and decreased the potential and measured improvement about 50 percent due to the new front mount.

Performance improvements due to the reduced HPC radial clearances have been recalculated for a concentrically ground HPC casing, using semiempirical correlations of the effect of clearance on the efficiency and stall margin of the CF6-50 high pressure compressor, and the results are presented below:

	Calculated (Based on Measurements)	Predicted
SFC Cruise	-0.1%	-0.3%
EGT Takeoff	-1.5° C	-3.5° C
Stall Margin (Takeoff Flow)	+3.5 Pts. (16%)	
Stator Angle Margin (Takeoff)	+0.8 Degree (10%)	

ORIGINAL PAGE IS
OF POOR QUALITY

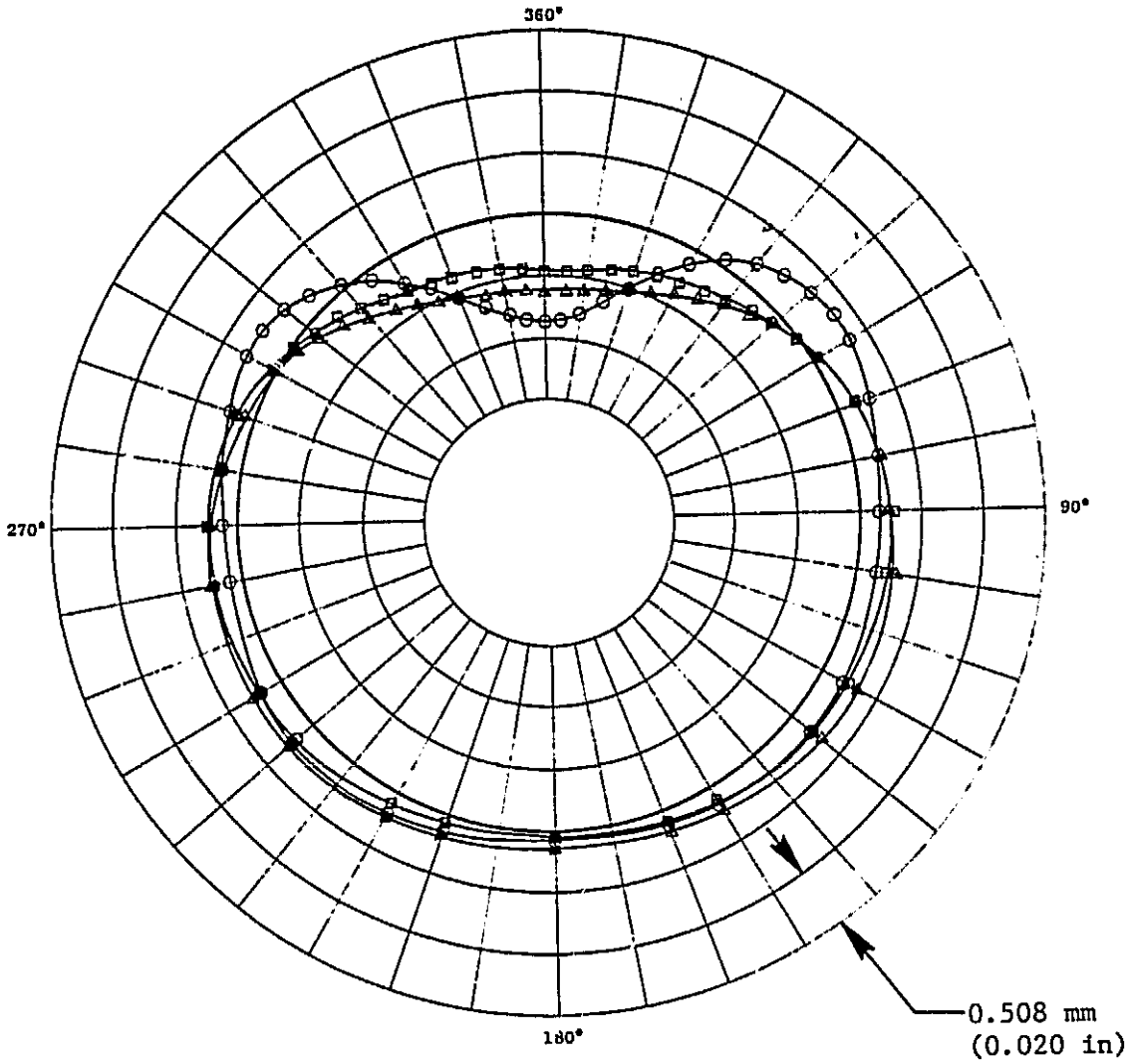

○ Original Front Mount, Titanium Casing

△ New Front Mount, Titanium Casing

□ New Front Mount, Steel Casing

Figure 10. CF6-50 Original and New Front Mount - HPC Casing Radial Deflection at Stage 3, Maximum Static Thrust Condition (Including 1 G Down).

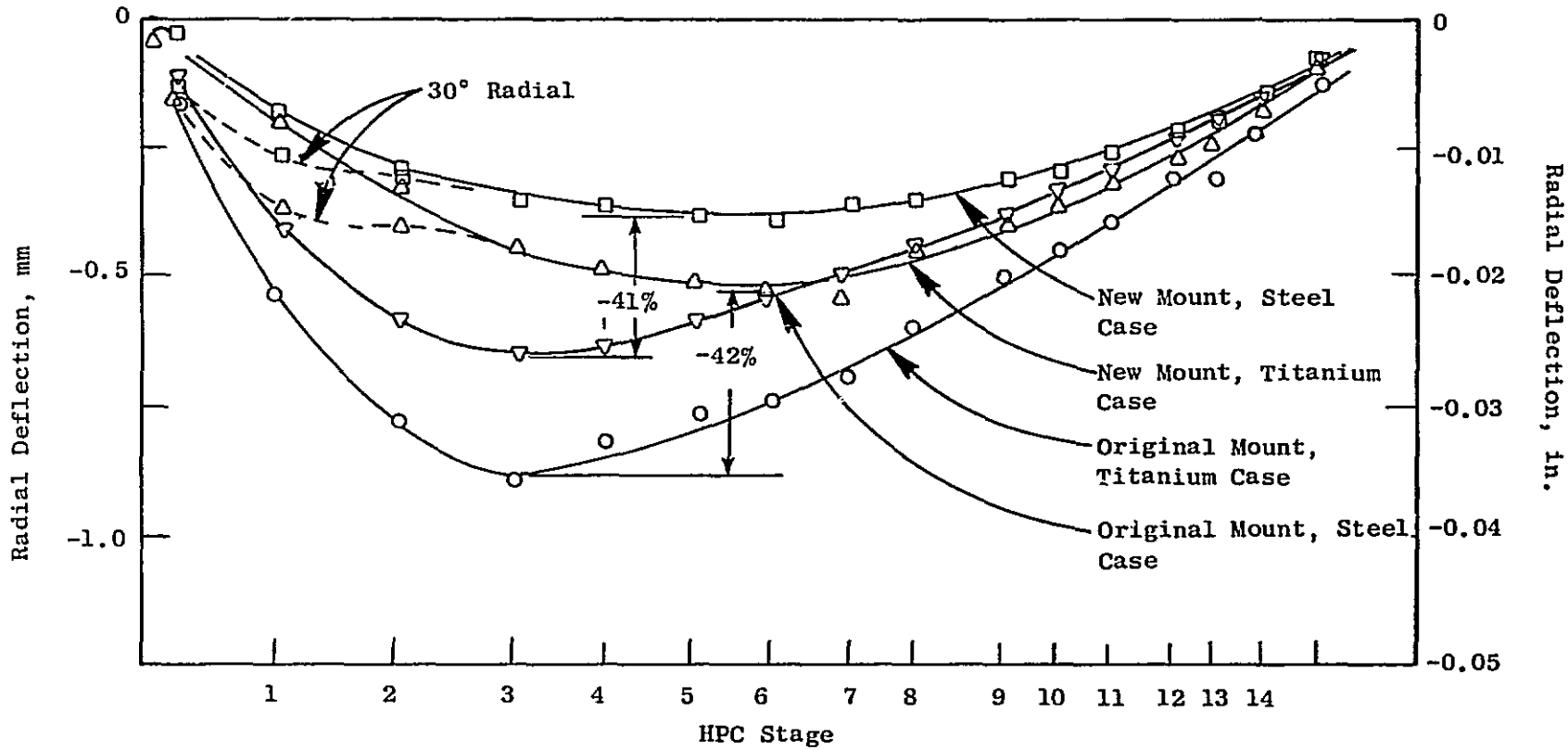

Figure 11. Original and New Front Mount - HPC Casing Backbone Radial Deflection, Maximum Static Thrust Condition (Including 1 G Down), DC-10 Inlet, DC-10 Wing Pylon.

ORIGINAL PAGE IS
OF POOR QUALITY

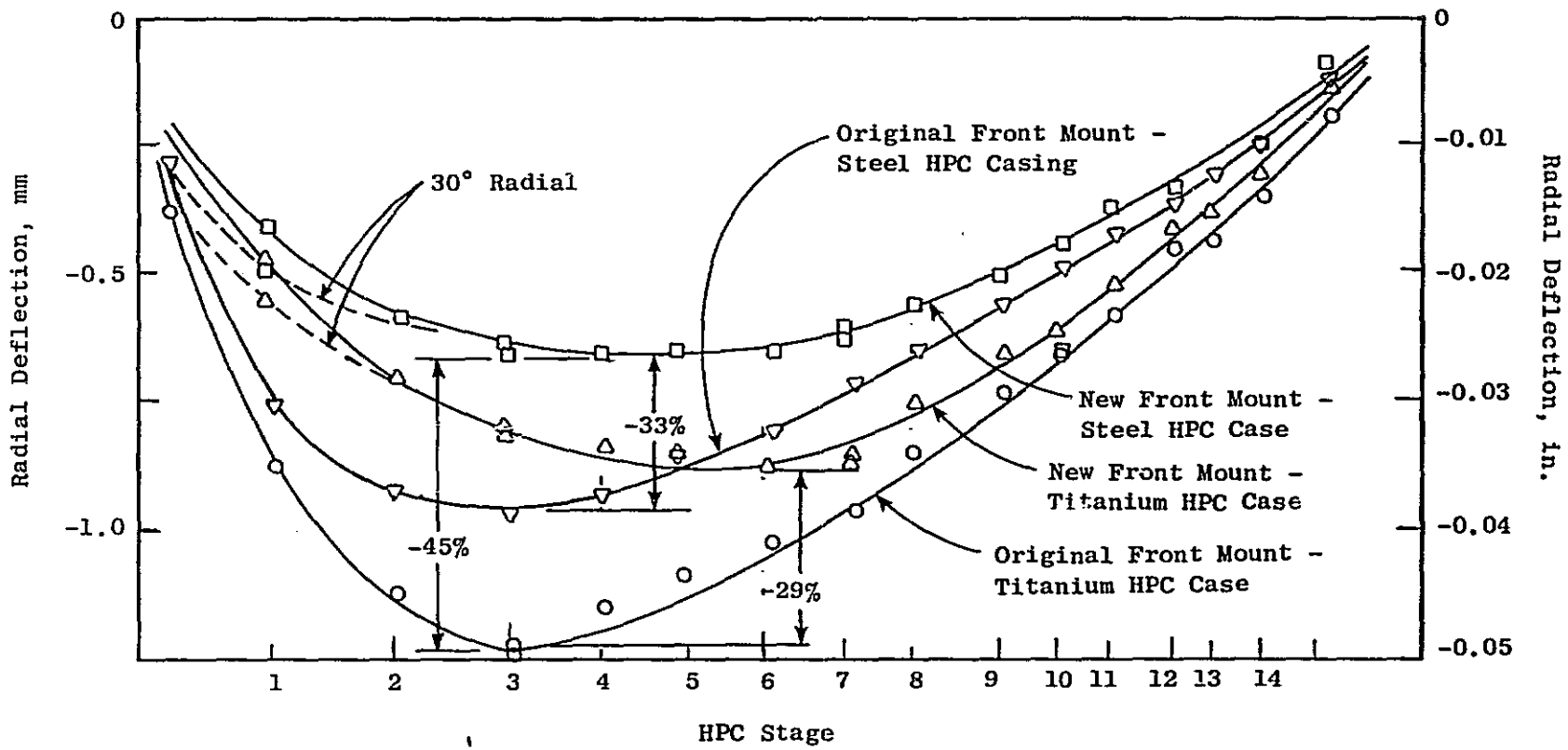

Figure 12. Original and New Front Mount - HPC Casing Backbone Radial Deflection, Takeoff at Rotation Condition (Including 1 G Down), DC-10 Inlet, DC-10 Wing Pylon.

ORIGINAL PAGE IS
OF POOR QUALITY

Improvements in the stall and stator angle margins are significant for a new compressor and are even greater for a deteriorated engine.

Low cycle fatigue testing demonstrated the life capability of the new front mount hardware to be in excess of 35,000 simulated flight cycles. A failure of the new front mount platform attachment lug occurred after 47,130 cycles, or 12,130 cycles into the second lifetime test with about 20 percent higher loads. Failure of the mount platform attachment lug was caused by low cycle fatigue cracking initiated by fretting between the lip of the bolt-hole bushing and the mating upper surface of the attachment lug. Stress levels measured in the same region on a second new front mount were sufficiently low such that fatigue cracking would not have been initiated without the adverse effect of local surface fretting. To eliminate the fretting problem, the upper surface of the mount platform lug at the bushing lip interface was shotpeened and coated with a sacrificial protective layer of plasma sprayed copper-nickel-indium, followed by a coating of molybdenum disulfide dry film lubricant. The newly-coated mount platform was assembled with the hardware from the previous cyclic endurance test. Low cycle fatigue testing was continued to complete the second lifetime cycles (70,000 total cycles) on all remaining new front mount hardware, and to complete one lifetime (35,000 cycles) on the reworked mount platform at the 20 percent higher loads of the second lifetime cycle.

Factory engine and flight test results have indicated trouble-free operation with the new front mount, and showed that the link loads agree closely with the calculations. The new front mount system subsequently has been certified by the FAA and is incorporated in all new CF6-50 and CF6-80 production engines.

5.3 ECONOMIC ASSESSMENT

The new front mount concept was evaluated by Boeing and Douglas during the Feasibility Analysis (Reference 1). A cruise specific fuel consumption improvement of 0.3 percent was predicted based on reduced HP compressor case distortion.

Deflection/distortion tests conducted under this program indicate that the SFC improvement for the new front mount amounts to 0.1 percent for a new engine. Further savings in the form of improved performance retention are predicted, but not included in the economic assessment because of the difficulty of quantification.

A 0.1 percent cruise SFC reduction results in the block fuel savings per aircraft shown in Table VIII for the minimum fuel consumption mission analysis. The estimated annual fuel savings per aircraft for the above block fuel savings are also shown in this table and indicate an annual fuel savings up to 77,500 l (20,500 gal.) per aircraft.

Economic assessment of Payback Period and Return on Investment (ROI) for a new engine is summarized in Table IX for the medium international fuel price of 14.53¢/l (55¢/gal.) for the DC-10-30, and for the medium domestic fuel price of 11.89¢/l (45¢/gal.) for the DC-10-10 and the B747-200. Payback period for a new engine is about one year. This does not include the effects of improved performance retention and reduced maintenance cost resulting from improved stall

Table VIII. CF6 Engine with Front Mount - Fuel Savings per Aircraft (Minimum Fuel Analysis, Cruise Δ SFC = -0.1%).

Aircraft (Engine)	Range		Block Fuel Savings/Aircraft		Annual Fuel Savings/Aircraft	
	km	miles	kg	%	Liters/AC/Yr.	Gals/AC/Yr.
DC-10-10 (CF6-6)	645	400	- 7.0	-0.10	23,600	6,235
	1690	1050	-15.7	-0.10	29,300	7,741
	3700	2300	-33.7	-0.10	33,200	8,798
DC-10-30 (CF6-50)	805	500	- 7.1	-0.07	18,500	4,887
	2735	1700	-24.5	-0.10	29,900	7,900
	6275	3900	-66.5	-0.10	58,300	15,403
B747-200 (CF6-50)	700	480	- 7.3	-0.07	21,700	5,734
	3460	2150	-41.0	-0.10	38,600	10,198
	6195	3850	-84.7	-0.10	77,500	20,475

Table IX. CF6 Engine with New Front Mount - Economic Assessment of Payback Period and Return on Investment for New Buy.

(Medium Range, Minimum Fuel Analysis, Medium Fuel Price, Cruise Δ SFC = -0.1%).

Aircraft (engine)	Fuel Price ¢/l (¢/gal)	Payback Period years	ROI %
DC-10-10 (CF6-6)	11.89 (45) (Domestic)	1.15	87
DC-10-30 (CF6-50)	14.53 (55) (International)	1.01	99
B747-200 (CF6-50)	11.89 (45) (Domestic)	1.17	85

margin. As noted, even with the conservative assessment, the new front mount is attractive from both fuel savings and economic considerations.

The new front mount is physically interchangeable with the original front mount. The rework of the fan frame and the HP compressor case forward flange for engine installation is accomplished. Retrofit of existing deteriorated CF6 engines may be economically impractical, since new compressor blading and casing rub-strips would be required to obtain the tighter HP compressor tip clearances for improved performance.

6.0 HIGH PRESSURE TURBINE AERODYNAMIC PERFORMANCE IMPROVEMENT

6.1 DESCRIPTION OF CONCEPT

The program was initiated to provide aerodynamic and mechanical improvements for the CF6-6/LM2500 high pressure turbine. Objectives were aimed at significant reductions in specific fuel consumption, increased ruggedness, longer life, and reduced deterioration in service. The program has concentrated on:

- Improved aerodynamics
- Adoption of the single shank blade concept utilized on the CF6-50
- Improved cooling designs
- Improved clearance control

The improved turbine has fewer, more rugged blades and longer chord Stage 2 nozzle vanes, both of which provide better aerodynamic efficiency and reduced turbine exit losses (Reference 4).

The new turbine has a number of features which enhance overall engine performance. These features are:

- Modified Stage 2 vane aerodynamics
- Reduced Stage 2 exit swirl
- Better blade cooling effectiveness
- More effective wheel space seals
- Tighter tip clearance
- No blade mating face shank leakage
- Improved airfoil surface finish

The following paragraphs describe these performance features:

Stage 2 Vane Aerodynamics - The new Stage 2 vane has increased solidity. This was accomplished by increasing the chord length, as shown in Figure 13, while maintaining the same number of vanes. The inner and outer band shape was redefined, and the leading edge was reshaped to optimize the local pressure distribution.

Stage 2 Exit Swirl - The original design has a larger than desired exit swirl resulting in significant turbine midframe pressure losses. The new design reduces the exit swirl by 9° which reduces the turbine midframe pressure loss. This increases the efficiency by 0.57 percent as shown in Figure 14.

ORIGINAL PAGE IS
OF POOR QUALITY

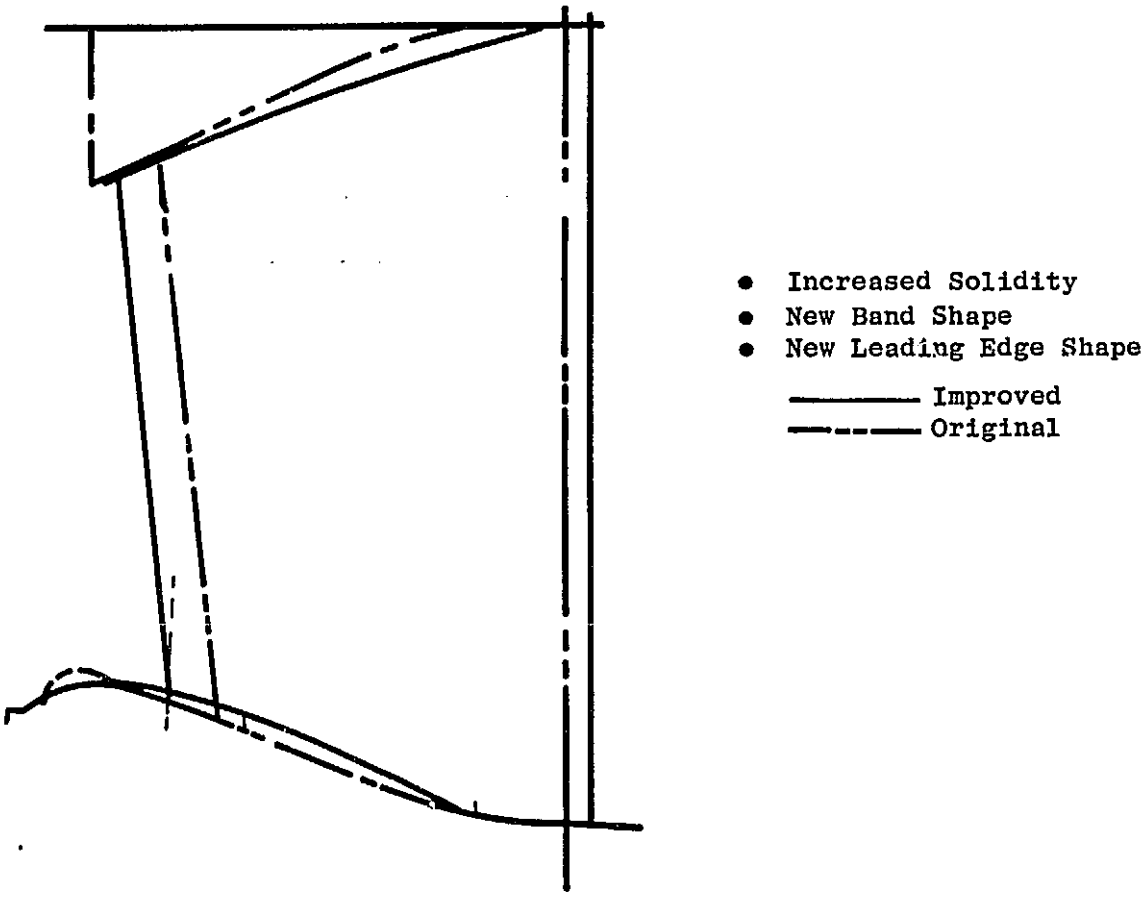

Figure 13. Improved Stage 2 Vane Aerodynamics.

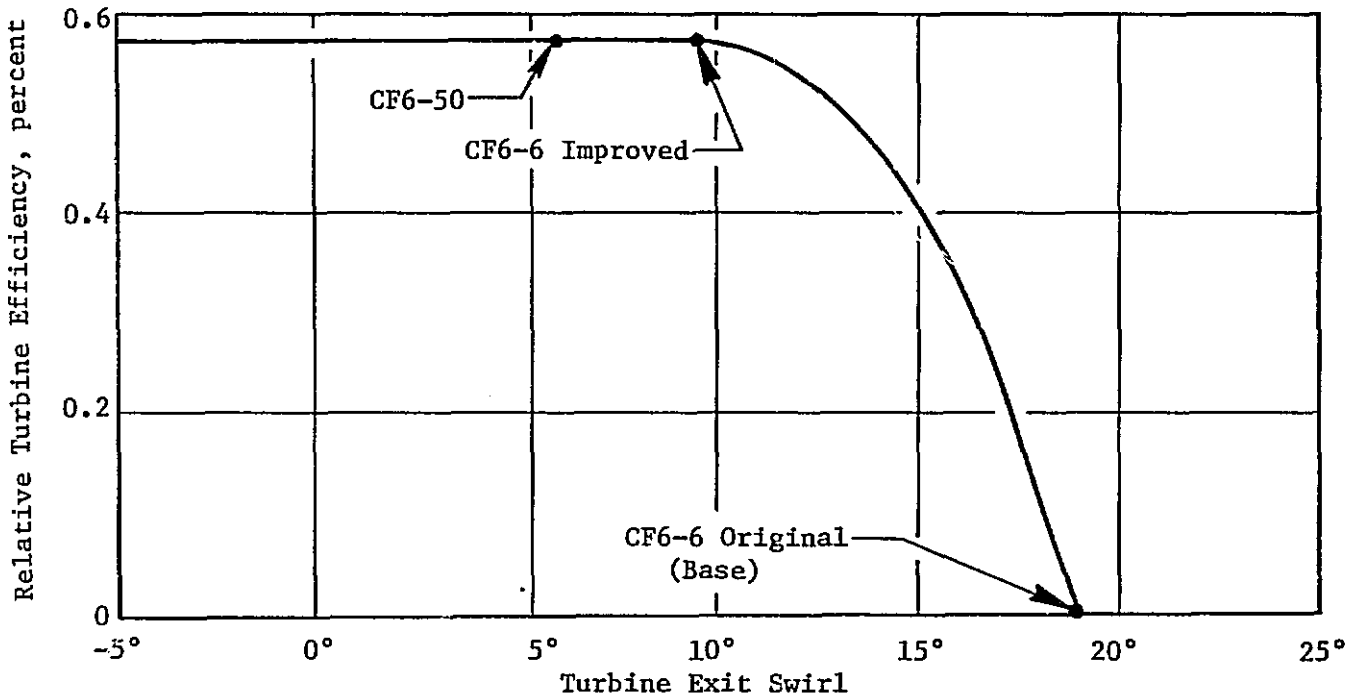

Figure 14. Reduced Stage 2 Exit Swirl.

ORIGINAL PAGE IS
OF POOR QUALITY

Blade Cooling Effectiveness - Modern casting technology allowed more flexibility in the design of the Stage 1 and 2 turbine blades. The original blades start with a solid casting which is then drilled to form the various cooling passages. By introducing precision cast cored airfoils, similar to those of the CF6-50, more effective cooling can be achieved. Features such as shaped passages, sidewall turbulence promoters, pin fin trailing edge passages, and smooth turnarounds in the serpentine passages are achieved. A comparison of the new design to the original blade in Figure 15 shows significant metal temperature reduction for the same amount of cooling flow. The better cooling effectiveness could have been used to reduce cooling flow while maintaining current temperature levels. To increase Stage 1 blade life, it was decided to lower the metal temperature instead. Stage 2 maintains current metal temperatures and reduces cooling flow, resulting in a performance improvement.

Wheelspace Seals - The new turbine incorporates better wheel seals as shown in Figure 16. By introducing seals over and under the blade (angel wings), adequate cavity purging is achieved with reduced airflow. These improved seals have been proven on the CF6-50 turbine. An improved Stage 1 blade retainer, which reduces flow leakage across the Stage 1 wheel rim, is another CF6-50 feature which is incorporated to help achieve reductions in cavity temperature and purge flow. The reduction in purge flow results in improved overall performance.

Tip Clearance - The new turbine incorporates features in the stator system which improve clearance control in several ways as indicated in Figure 17. By increasing the cross-sectional mass of the clearance control ring and by better isolating it from the shroud cooling air, a slower thermal response is achieved. This will result in a better thermal match with the rotor blade tip during steady-state and transient operation. Also, the stiffer clearance control ring, in its controlled environment, will have a greater influence in resisting engine case distortion.

The shroud supports, with a stronger cross section, are less flexible. This makes the supports deflect less inwardly due to the high radially inward pressure at takeoff conditions. In turn, this reduces the tip rub at takeoff, resulting in improved tip clearance at the cruise conditions.

Mateface Shank Leakage - A source of turbine deterioration has been eliminated with the introduction of the single shank blade design (See Figure 18.) With the twin shank blades, the two blades have a mating face which must be brazed together to seal in the cooling air. After a fairly short time, the braze cracks and cooling air leakage results in performance deterioration. With the new design, the cooling air passages are cast in, and the cooling air is fed from underneath the dovetail. This entirely eliminates deterioration due to leakage of cooling air.

Airfoil Finish - The blade and vane surface finish requirements for the CF6-50 are presently more stringent than those for the CF6-6 twin shank design. Surface finish requirements for the single shank design have been brought in line with those used on the CF6-50.

ORIGINAL PAGE IS
OF POOR QUALITY

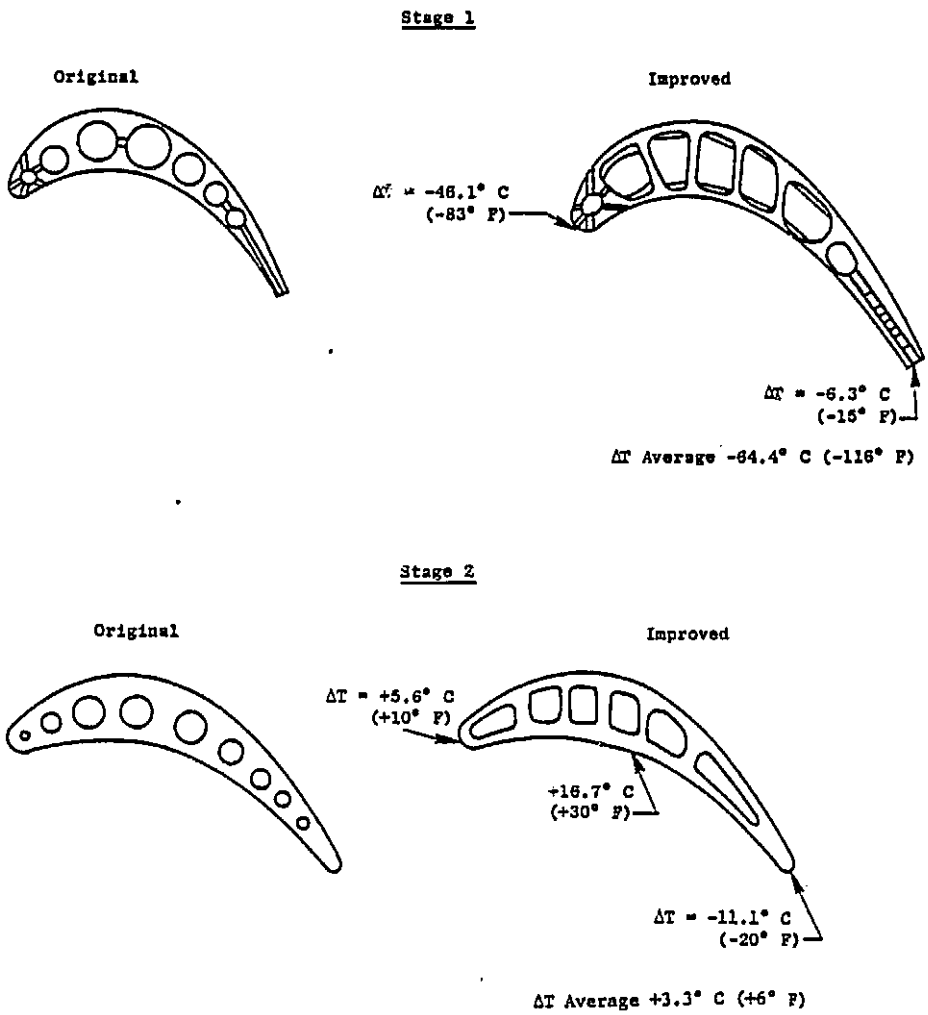

Figure 15. Comparison of Original and Improved Blades Showing Improved Cooling.

ORIGINAL PAGE IS
OF POOR QUALITY

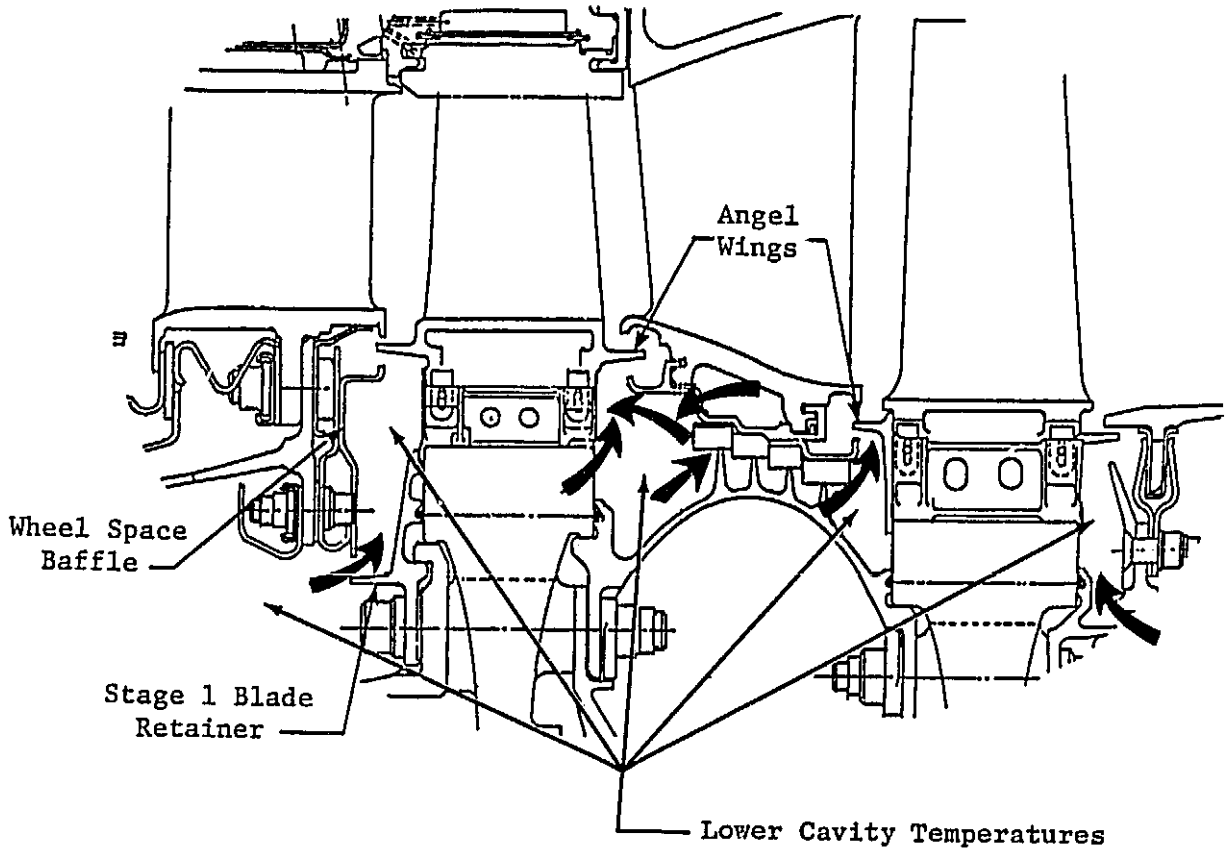

Figure 16. Improved Wheel Space Seals.

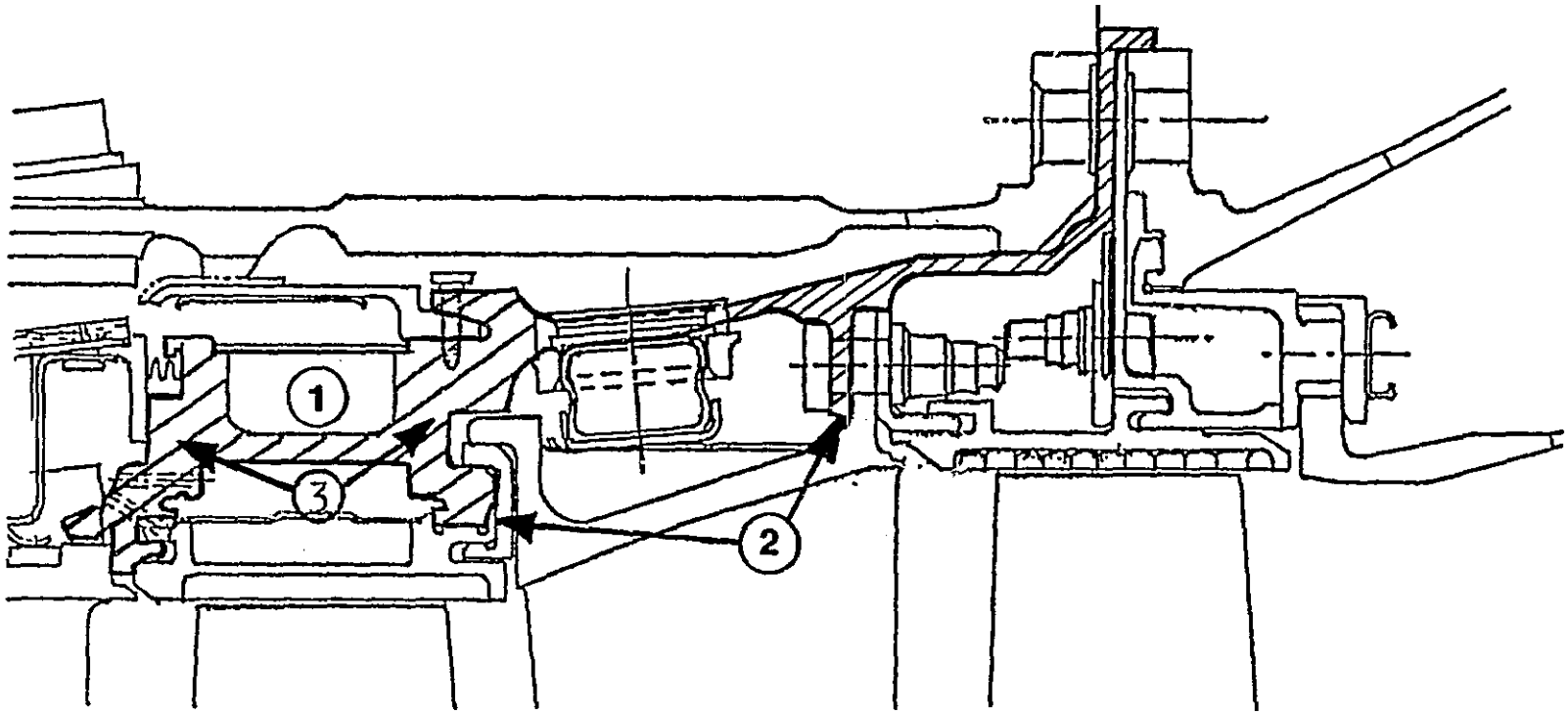

ORIGINAL PAGE IS
OF POOR QUALITY

1. Improved Stator to Rotor Thermal Match
2. Basic Structure More Isolated from Gas Path
3. Stiffer Hoop
   - Roundness Improvement
   - Improved Cruise Match

Figure 17. Tighter Tip Clearance.

ORIGINAL PAGE IS
OF POOR QUALITY

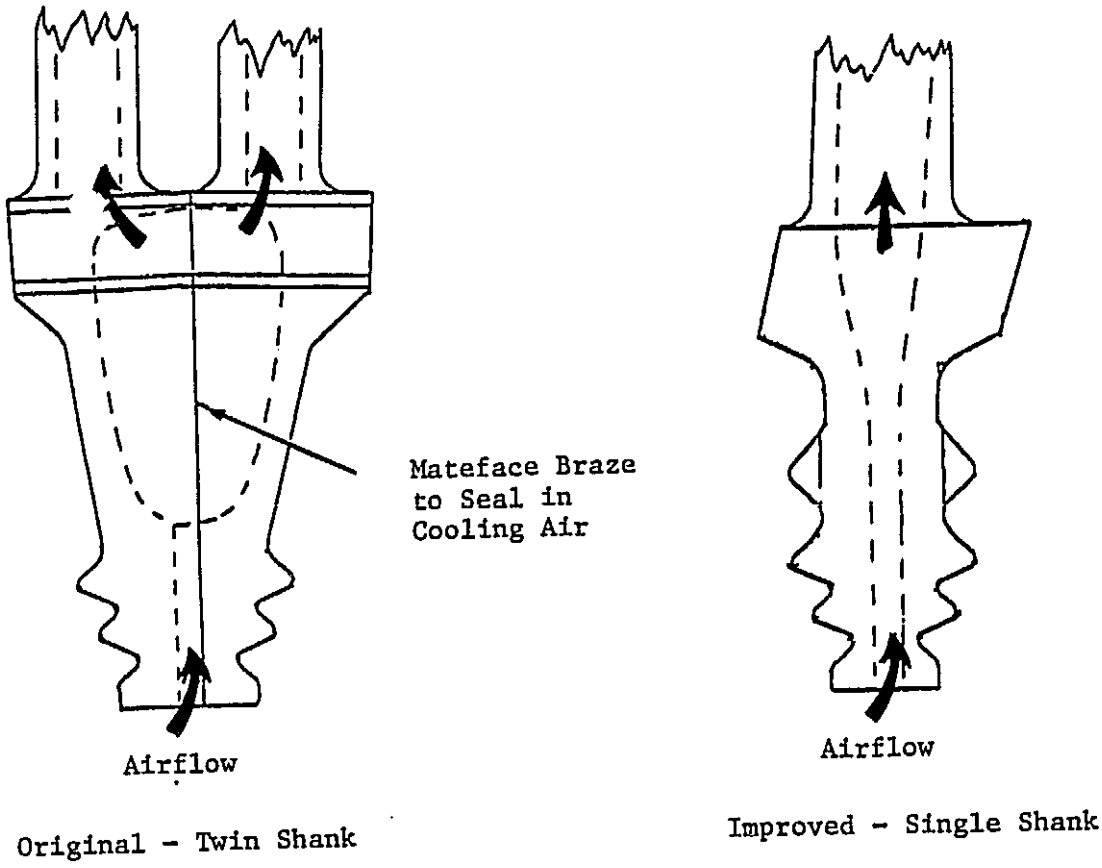

Figure 18. Single Shank Turbine Deterioration Reduction - No Mateface Shank Leakage.

6.2 SUMMARY OF TEST RESULTS

The high pressure turbine aerodynamic performance improvement concept has been evaluated in component tests and in engine ground tests. (Reference 4) The main results of these tests are discussed below:

6.2.1 Component Tests

Stage 1 Vane Cascade Test - This test demonstrated that the fully cooled improved turbine Stage 1 vane has an aerodynamic efficiency equal to the fully cooled original production vane.

Stage 2 Vane Leading Edge Flow Evaluation - This test demonstrated that the improved design vane insert inlet area reduced the static pressure loss, resulting in a reduction of the radial pressure gradient within the inlet. Larger trailing edge holes are required to achieve the design flow split.

Stage 1 Vane Trailing Edge Test - This test demonstrated that the selected improved vane design of two walls promoted in the staggered matrix has 2.44 times the heat transfer promotion than all walls smooth. The selected design reduces trailing edge temperature by 16.7° C (30° F) with a temperature increase of only 5.6° C (10° F) in the promoted region.

Stage 2 Vane Leading Edge Test - The test showed that the improved design vane insert results in a 10 percent increase in Nusselt number in the leading edge region. This indicates an improvement in the cooling of the vane leading edge.

Stage 2 Vane Trailing Edge Pin Fin Test - This test demonstrated that the selected trailing edge pin fin geometry of the improved Stage 2 vane design increased the heat transfer coefficient by a factor of 3 over that of a smooth wall.

Blade Dynamic and Steady-Stage Strain Distribution - Resonant frequencies and nodal patterns were obtained for the Stage 1 and 2 improved design blades. Relative strain distributions were determined for all modes, giving the detailed distribution of stress in the blades. The steady-state strain distributions obtained showed no unusual effects for either Stage 1 or Stage 2. The magnitude of the end effects is within the realm of experience for blading of this type.

Blade Frequency and Amplitude as a Function of Damper Force - The results of the test indicate that the dampers will produce the desired effects relating to frequency gain and stress reduction. A gain of about 11 percent in the first-flex frequency was found for both Stage 1 and Stage 2 blades. The Stage 1 blade could not be driven at high amplitudes, which was expected. The magnitude of the Stage 2 stress reduction was similar to that seen for the CF6-50 Stage 2 blade.

Turbine Disk Rim Stress Distribution Test - The stress concentration factors of the forward and aft rabbet fillets of the Stage 1 and Stage 2 turbine disk rims were determined from this test. The Stage 2 results are in good agreement with the two-dimensional analysis while the Stage 1 results show some differences.

6.2.2 Engine Tests

Instrumented Engine Test

This test determined the operating characteristics of the improved (single shank) turbine, such as:

- Stage 1 Blade Vibratory Response
- Stage 2 Blade Vibratory Response
- Rotor Vibratory Response
- Stage 1 Blade Metal Temperatures
- Stage 2 Blade Metal Temperatures
- Rotor Spool Metal Temperatures
- Rotor Cooling Flow
- Stage 2 Nozzle Cooling Flow
- Interstage Cavity Temperatures
- Rotor and Stator Transient Temperatures
- Stator Structure Temperatures
- Stator Structure Transient Response

The results were used to conduct additional life and design analyses.

Endurance Test

The 1000 cycle core engine endurance test on engine 441-019 fulfilled the test objectives of subjecting the new turbine design to the equivalent of 2500-3500 hours of airline service. A number of problem areas were uncovered but, in general, the posttest condition of the turbine was excellent. Figure 19 shows the condition of the rotor blades after the test. In the areas where problems were uncovered, modifications have been defined and programs were put in place to procure hardware, perform analysis, and evaluate the modification effectiveness via additional engine and component testing.

ORIGINAL PAGE IS
OF POOR QUALITY

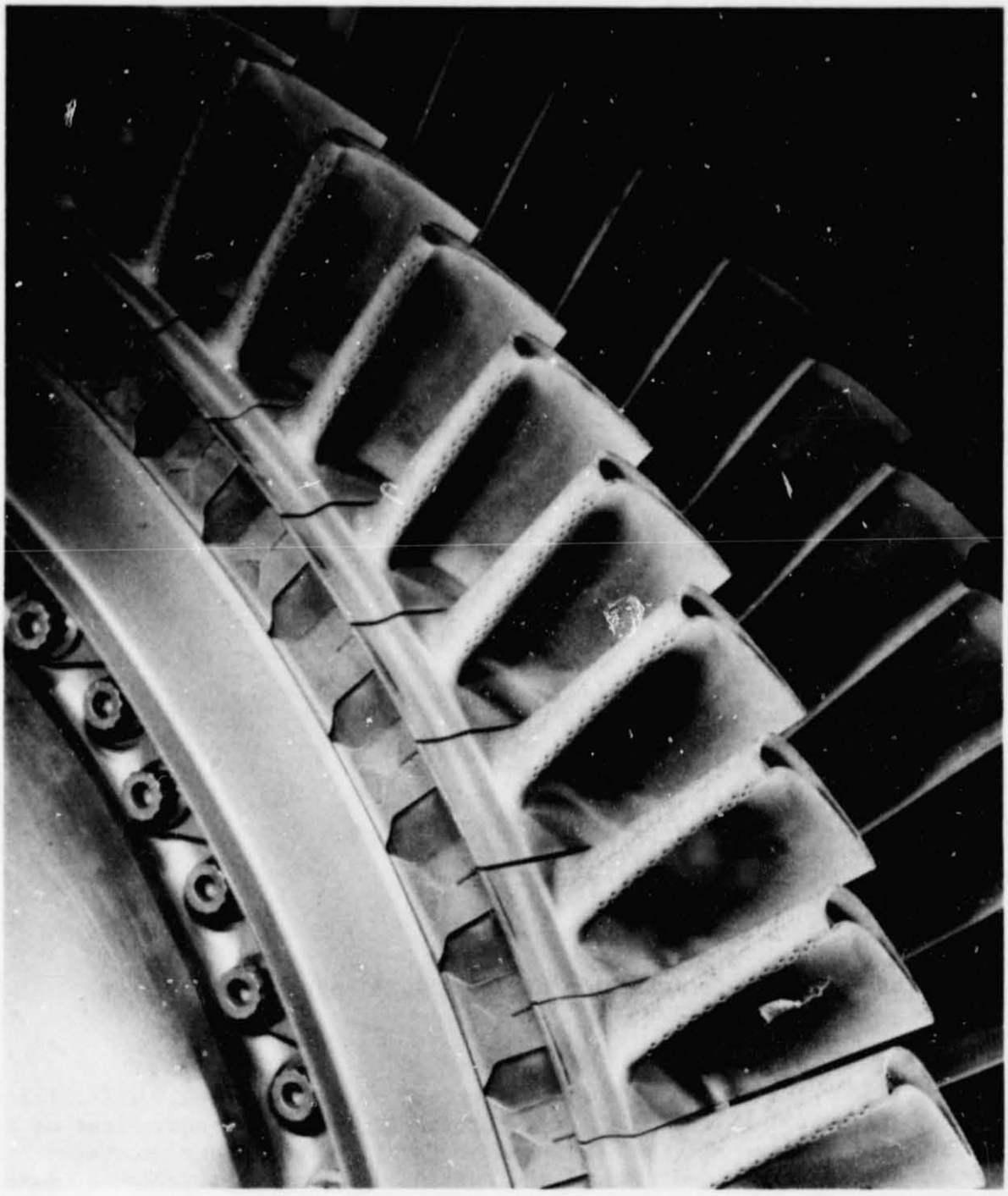

Figure 19. Stage 1 and 2 Blades in Rotor Assembly After 1000 Cycles.

No major design flaws were uncovered by the test which would hinder completion of the overall program on schedule. The 1000 cycle endurance test was successful in fulfilling all objectives in quickly identifying potential field problems. Basic integrity of the new turbine design was established.

6.2.3 Further Development

As a result of these tests and additional General Electric funded efforts, the development and certification of the improved (single shank) turbine were continued. Back-to-back engine tests of the original and the improved turbine demonstrated an improvement of 1.3 percent in cruise sfc and a 10° C reduction in exhaust gas temperature (EGT). An additional improvement of 0.3 percent in cruise sfc and 6° C on EGT is projected for long service engines.

6.3 ECONOMIC ASSESSMENT

The HPT aerodynamic performance improvement concept was evaluated by Douglas under Task 1 of this program (Reference 1) for a cruise specific fuel consumption improvement of 1.3 percent. The CF6 turbofan engine static back-to-back test demonstrated this performance improvement at cruise equivalent power for new engines.

The 1.3 percent reduction in cruise sfc results in the block fuel savings shown in Table X for the minimum fuel consumption mission. This is based on the data of Reference 1. The estimated annual fuel savings per aircraft for the block fuel savings are also shown in this table.

Table X. CF6 Engine With High Pressure Turbine Aerodynamic Performance Improvement-Fuel Savings Per Aircraft (Minimum Fuel Analysis, Cruise ΔSFC = -1.3%)

Aircraft (Engine)	Range		Block Fuel Savings/Aircraft		Annual Fuel Savings/Aircraft	
	km	miles	kg	%	l/AC/Year	gal/AC/Year
DC-10-10 (CF6-6)	645	400	-103.4	-1.3	276,000	72,919
	1690	1050	-215.0	-1.3	381,800	100,872
	3700	2300	-449.5	-1.4	426,000	112,550

The economic assessment for the assumed medium fuel price of 11.89¢ liter (45¢/gal) is summarized in Table XI.

Table XI. CF6 Engine With HP Turbine Aerodynamic Performance Improvement - Economic Assessment of Payback Period and Return on Investment for New Buy.

(Medium Range, Medium Fuel Price, Minimum Fuel Analysis, Cruise ΔSFC =-1.3%)

Aircraft (Engine)	Fuel Price ¢/l	Fuel Price (¢/gal)	ROI %	Payback Years
DC-10-10 (CF6-6)	11.89	(45)	600	0.17
	Domestic			

7.0 HIGH PRESSURE TURBINE ROUNDNESS

7.1 DESCRIPTION OF CONCEPT

The objective of this program was to improve the performance of the CF6-50 high pressure turbine by reducing the blade-to-shroud clearance. This is accomplished by (1) roundness control and (2) clearance control (Reference 5).

7.1.1 Roundness Control

The control of the roundness of a gas turbine engine structure requires a balanced and thorough evaluation of all of the primary engine structural members. These components include the fan casing, compressor casing, compressor rear frame (CRF), the high pressure turbine (HPT) Stage 1 and 2 nozzle supports, the turbine midframe (TMF), the low pressure turbine (LPT) casing and the turbine rear frame (TRF). Figure 20 highlights and defines the critical structural members of the CF6-50 engine.

Each of these components is subjected to varying levels of nonaxisymmetric loading and thermal gradients which tend to induce out-of-roundness distortions in these components. These distortions tend to propagate through the entire length of the engine.

Turbine Midframe Effects

One of the principal causes of HPT stator out-of-roundness is distortion of the adjacent structure. Previous analytical studies indicated that radial distortions in the original TMF structural hat sections are the major contributor to HPT stator distortion. The HPT stator shrouds in the CF6-50 are supported from the TMF forward flange joint which is connected to the TMF structural hat sections by a sheet metal cone. Distortions in the TMF structural hat sections are transmitted to the HPT shrouds through this supporting structure and were calculated to cause a 0.4 mm (0.016 in) inward distortion of the HPT shrouds of the HPT shrouds at steady-state takeoff. Distortions in the original TMF structural hat sections occur due to:

(a) Mechanical loading resulting from engine mount reactions (the engine aft mount is an integral part of the structural hat section) and internal component loads being transmitted through the struts to the outer casing structure.

(b) Temperature differentials within the TMF structure due to different thermal response rates throughout the structure, strut internal air temperature variations and variations in the air temperature and heat transfer rates throughout the TMF.

(c) Non-uniformity of the structural hat section stiffness around the TMF circumference.

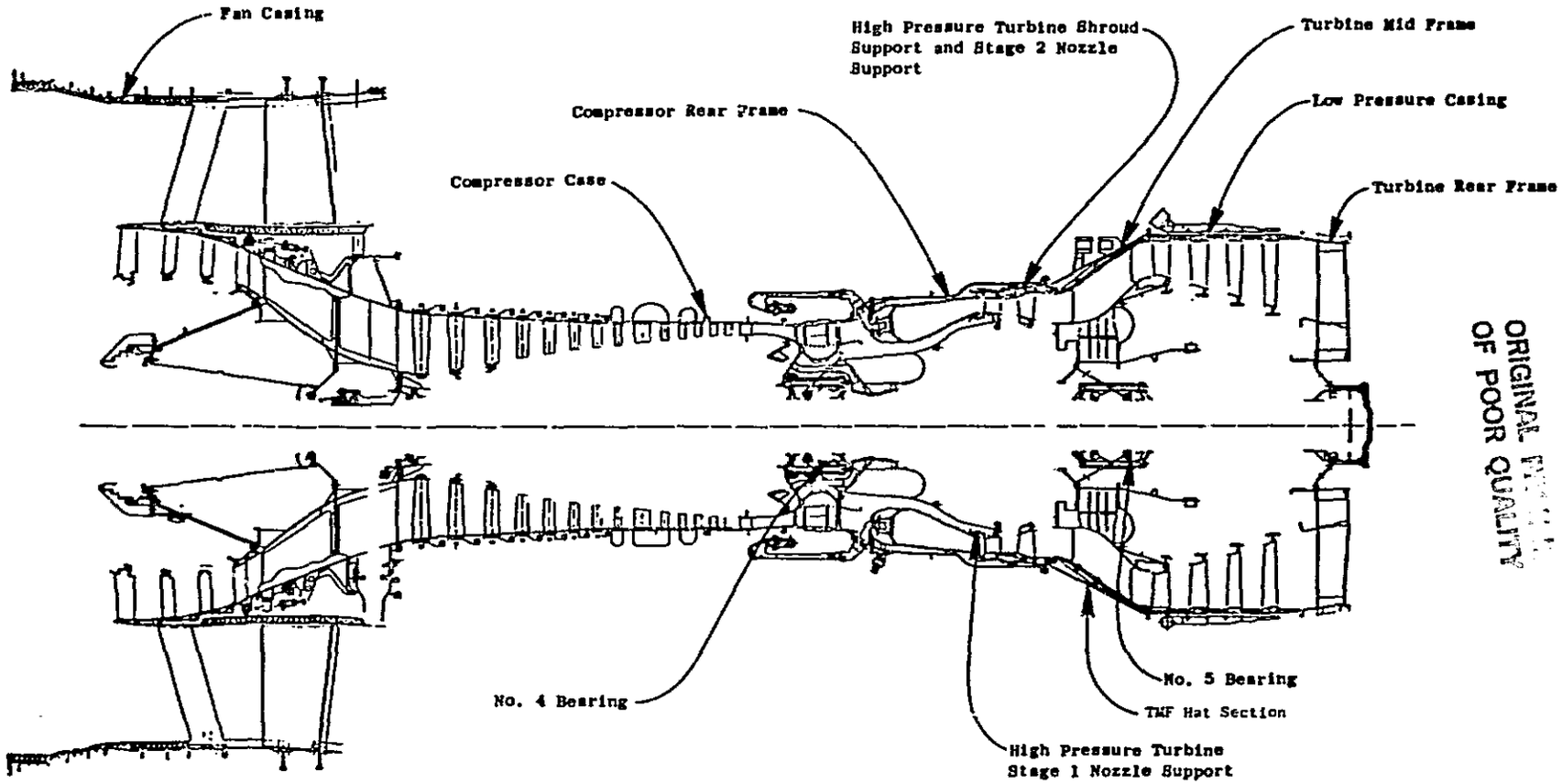

ORIGINAL PAGE IS OF POOR QUALITY

Figure 20. CF6-50 Major Cases and Frames.

Analysis of HPT stator distortion resulting from TMF distortion was done using the General Electric structural analysis computer programs. The analysis method had been correlated by means of static testing of the full engine structure during which both TMF hat section and HPT stator out-of-roundness were measured.

The TMF was redesigned to reduce the structural non-uniformity and thermal differentials throughout the structure in order to reduce the distortion of the TMF and therefore, the out-of-roundness in the HPT stator.

The major elements in the TMF redesign were as follows:

(a) Relocation of the engine mount points on the outer casing allowing the structural hat sections to become the same configuration around the frame circumference. This results in uniform stiffness and temperature of the hat sections around the circumference.

(b) Thermal insulating liners were added to the inner diameter of several of the struts. In the present design the struts heat up to different temperatures due to the different temperatures of the cooling and pressurization air routed into and out of the frame through the struts. The added liners were designed to isolate the struts from the cooling effects of this air. The liner lengths and the number of struts to which liners were added were chosen to control the strut temperature differential. The strut temperature differential was set to take advantage of the resultant distortion of the structural hat sections and to have the strut temperature variation distortion cancel out the distortion caused by the mechanical and mount loads.

(c) A shield was added around the outside of the TMF/CRF flange joint to isolate the flange from the non-uniform cooling effects of the secondary air flowing through the aft core compartment. This secondary air cools these flanges non-uniformly around the circumference resulting in a non-uniform flange temperature. The non-uniform flange temperature results in a distortion of the flange, which in turns, distorts the HPT stator.

Analytical studies of the redesigned TMF were done prior to testing to predict the TMF caused HPT stator out-of-roundness and indicated an approximately 0.1 mm (0.004 in) inward distortion of the HPT shrouds at steady-state takeoff.

HPT Shroud Temperature Effects

Since roundness must be assured before any significant work can be directed toward blade tip clearance reduction, the turbine shroud structure itself must stay round. In addition to being influenced by other engine structures, turbine structures may lose their roundness due to circumferentially non-uniform heating or cooling such as recirculation of hot flowpath gases into the cavities between the turbine flowpath hardware. This recirculation of hot gases can induce local overheating of the turbine structural members, causing them to deform.

Prevention of this occurrence can be accomplished by properly shielding the structural members from the flowpath. Reduction in cavity size, creation of narrow, tortuous paths which hot gas must follow to be exposed to the supporting members, and adequate cavity purge air are required to accomplish this.

To achieve this objective, a modified CF6-50 turbine support system was designed. Figures 21 and 22 show the current and revised turbine support systems and the types of improvements the final design contained to reduce recirculation.

Other Sources of Out-of-Roundness

Out-of-roundness caused by other sources, as investigated by the methods of this program, were deemed to be negligible. When the magnitudes of the deflections caused by the turbine midframe are considered, this is certainly a justifiable assumption because the TMF effects must be controlled before any secondary effects would be evident.

7.1.2 Clearance Control

In conjunction with the improvements in engine roundness, a parallel effort focused on improvements in the turbine supporting structure which allowed the establishment of reduced turbine operating clearances.

Clearance Transient Response

Once turbine structural influences, caused by hot gas recirculation, have been minimized, clearance control improvements can be defined. Experience has shown that steady-state engine operating clearances are set at some engine transient operating condition. Usually, the "worst case," or minimum clearance condition occurs during a "hot rotor reburst". This is defined as an engine decel from takeoff power to idle, holding at idle for a period of time, generally less than five minutes, and then accelerating the engine back to full takeoff power. The turbine shroud support member, being considerably less massive than the turbine disk, cools quickly in comparison to the disk. A reacceleration of the engine, which occurs in approximately ten seconds, adds rotational stress growth and blade thermal growth to the disk thermal growth, very little of which was lost due to the slow disk cooling rate. The net result is a hot blade tip radius greater than that of the supporting structure, in which case a rub occurs. This is shown graphically in Figure 23.

Elimination or minimization of the level of this rub does, therefore, establish both the installed cold clearance and the steady-state hot running clearance of the turbine system, since the depth of rub is directly a function of the starting radii of the shroud and the blade tips.

Therefore, a modification of the shroud decel transient response rate, so as to slow down the radial inward growth rate of the shroud, increases the clearance margin on a reburst. Rub severity is, consequently, reduced so steady-state running clearances can be reduced. Accel and cruise clearances were evaluated as well to assure that no significant losses occur during these phases of operation.

Ⓐ Areas Where Hot Gas Can Recirculate, Heating the Shroud Support and Shroud Attaching Brackets.

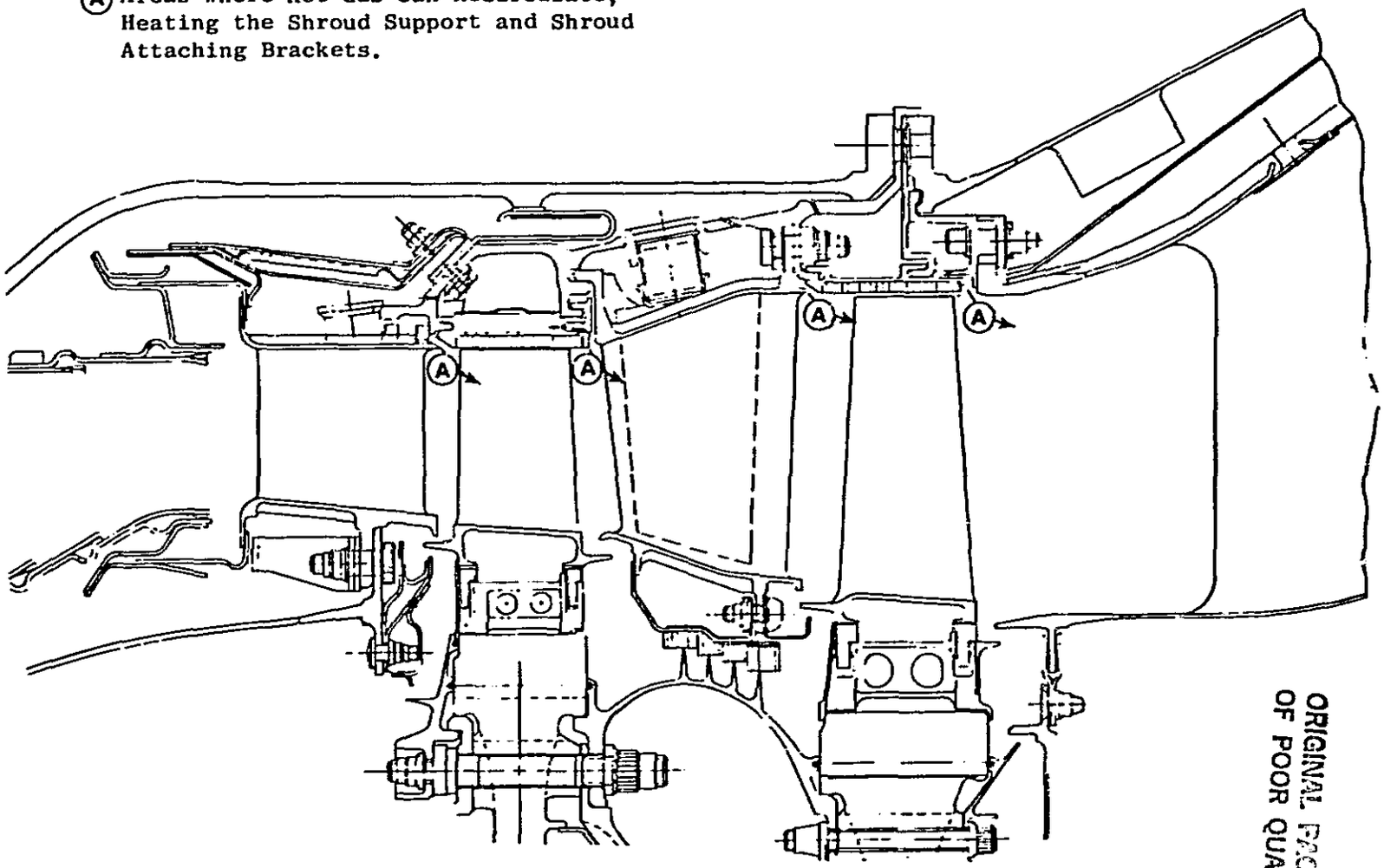

Figure 21. Current CF6-50 Turbine Support System Design.

ORIGINAL PAGE IS
OF POOR QUALITY

ORIGINAL PAGE IS
OF POOR QUALITY

(A) Areas Closed or Reduced to Lessen Hot Gas Recirculation
(B) Components Revised and Segmented to Shield and Insulate the Shrouds Support from Hot Gases

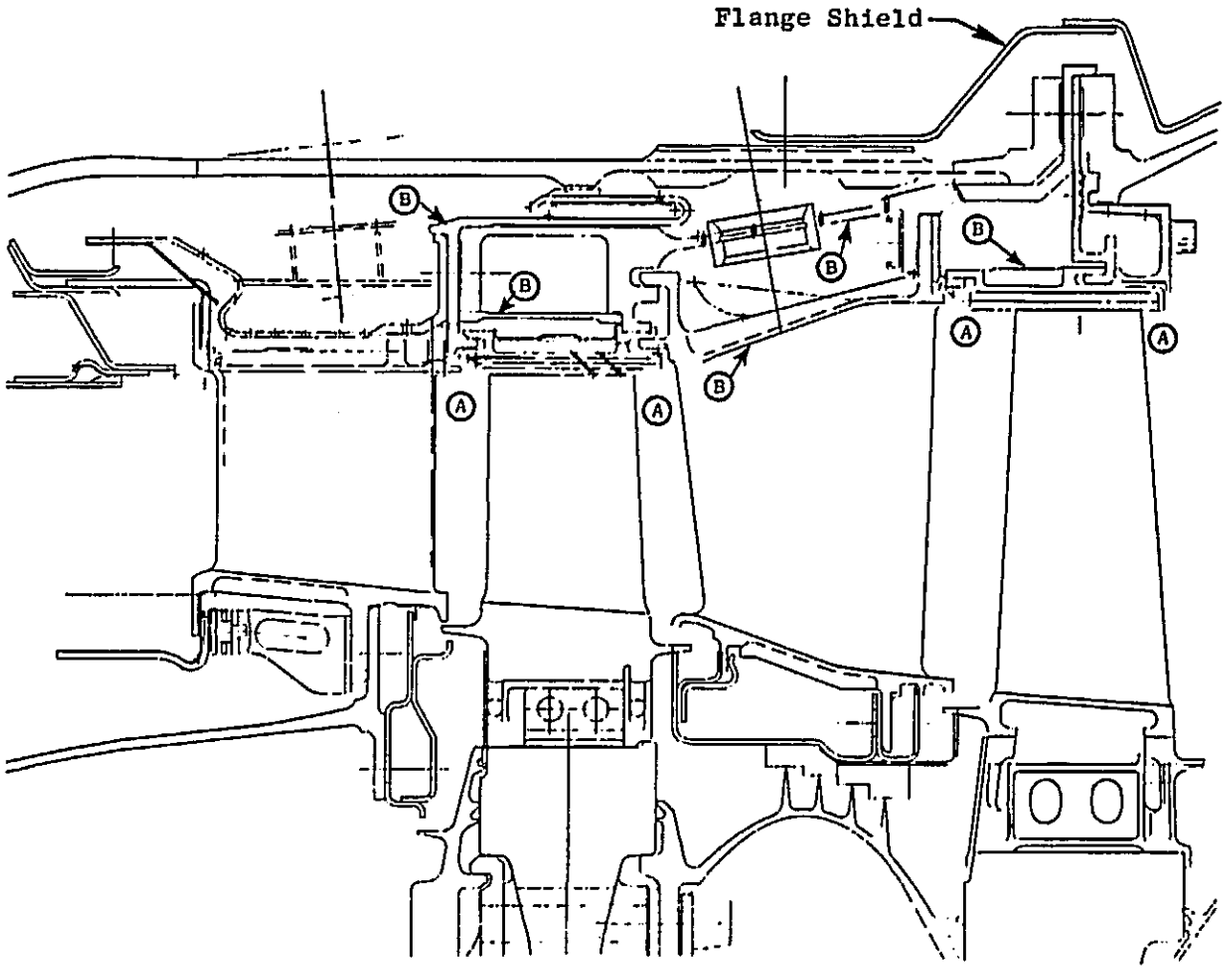

Figure 22. Revised CF6-50 Turbine Support System.

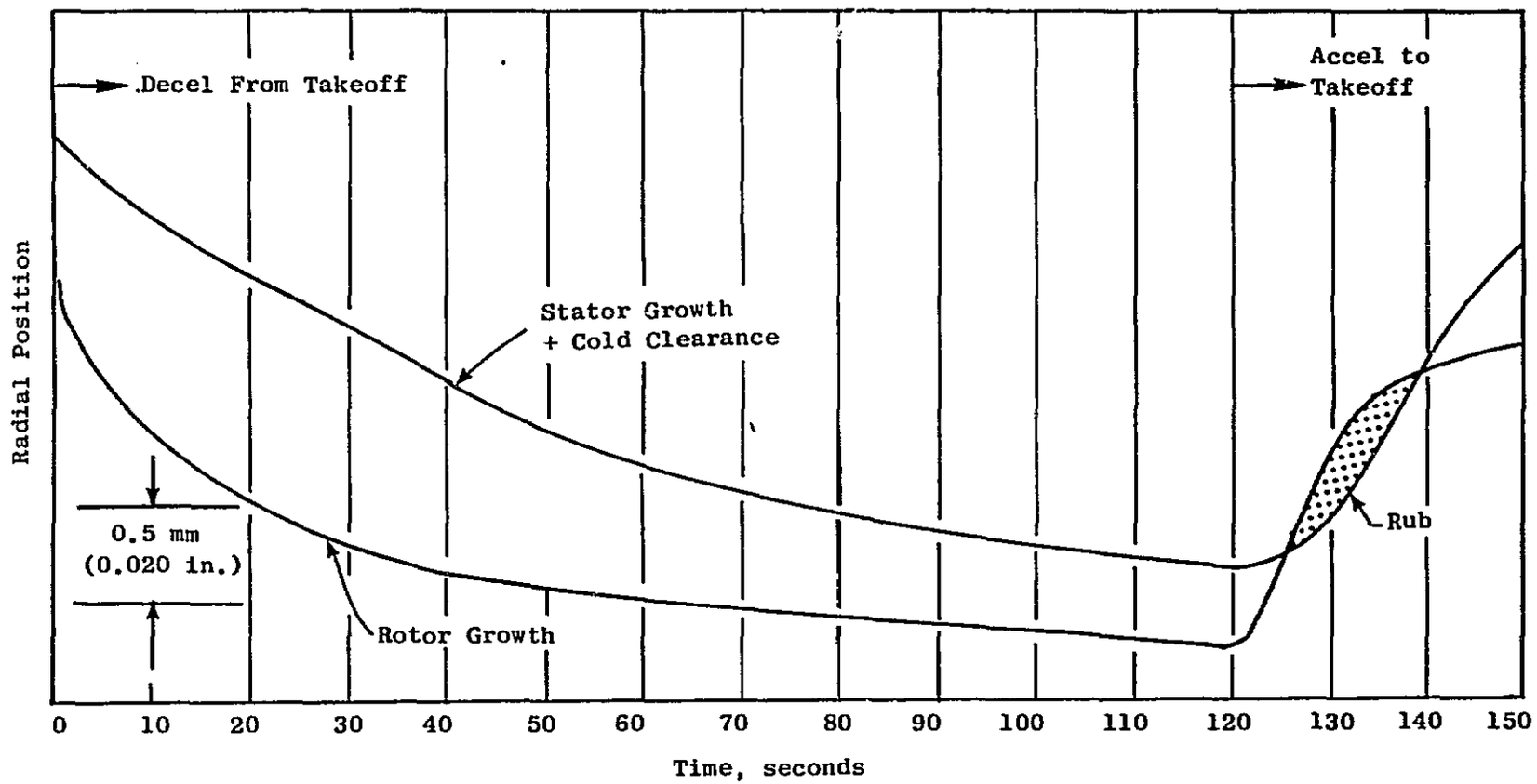

Figure 23. Typical Hot Rotor Reburst.

ORIGINAL PAGE IS
OF POOR QUALITY

Reduction in support structure radial excursion rate may be accomplished by increasing support mass, i.e., thermal inertia, by reduction in cooling cavity heat transfer to the supporting structure through the use of shielding or baffling, or by substitution of support materials to achieve a more favorable thermal growth relationship.

HPT Shroud Support Materials

Alternate materials investigated included a class of alloys with "controlled" thermal expansion coefficients such as IN903, CTX1 and CTX2. These alloys possess a characteristic unique to ferromagnetic alloys; that is, an inflection point or "knee" in the thermal expansion coefficient curve. This knee occurs at approximately 427° C (800° F).

This peculiarity of the thermal-expansion coefficient can be used to advantage since tighter clearances can be set at high power settings while maintaining more open clearances for reburst margin. These materials match closely the growths of the rotating structural components above 427° C, while below they lag the rotor growth. Therefore, an increase in the critical reburst clearance, as well as an increase in the minimum accel clearance can be achieved from their use. These transient clearance increases can be used to reduce rub levels or to reduce steady-state clearances.

The controlled thermal expansion coefficient alloys, IN903 and CTX1, that were studied during the preliminary design phase of this program, unfortunately have some rather severe limitations. Material testing showed that these alloys exhibited both notch sensitivity and a "stress corrosion" phenomenon. Another concern was that because these are materials which do not contain chromium, coating would be required to provide oxidation protection in most environments where their use would be beneficial.

The stress corrosion phenomenon manifested itself in a failure mode which is analogous to stress corrosion cracking in, for example, titanium alloys. Both IN903 and CTX1 when exposed to moderate stresses and high temperatures 480-700° C (900-1300° F), failed by intergranular failure. This phenomenon is called stress-accelerated grain boundary oxidation.

Although other materials with the controlled thermal expansion coefficient characteristics desired such as CTX2 were under development at design "freeze" time for procurement purposes, it was decided not to use IN903, CTX1 or CTX2 in this engine improvement program. The long lead times required to obtain material, manufacture hardware, instrument hardware, assemble, etc., necessitated this decision.

However, it was decided to change the material of the shroud supporting structure from IN718 to WASPALOY. The coefficient of thermal expansion of WASPALOY allows some improvement in the decel response rate of the structure and, when coupled with added mass, baffling, and cavity heat transfer improvements, provides a definitely improved shroud supporting structure.

7.2 SUMMARY OF TEST RESULTS

The high pressure turbine roundness improvement developed under this program has been evaluated in an instrumented engine test and an endurance test (Reference 5). The main results of these tests are summarized below:

Instrumented Engine Test

The measured clearance response during a decel and an accel correlates well with the predictions (Figures 24 and 25). The measured out-of-roundness of the HP turbine stator is in reasonable agreement with the calculated out-of-roundness (Figure 26). The major contribution to the out-of-roundness is from the turbine mid frame.

In the instrumented engine test, real time Stage 1 blade-to-shroud clearance measurements were obtained for a CF6-50 engine for steady-state and transient operation. The improved high pressure turbine hardware allows a reduction in HPT running clearances of 0.38 mm (0.015 in).

This clearance reduction translates to an improvement of 0.58 percent in turbine efficiency and a 0.31 percent reduction in specific fuel consumption at takeoff power. The equivalent cruise sfc reduction is 0.22 percent.

The above improvement is for a new engine; for a long-term engine (3000 hrs) the roundness improvements amounts to 0.50 percent in cruise sfc.

Endurance Test

The CF6-50 static endurance test demonstrated the life capability of the HP turbine roundness hardware in 842 flight cycles with indications of only minor distress.

7.3 ECONOMIC ASSESSMENT

The HP turbine roundness concept was evaluated by Boeing and Douglas under Task 1 of the program (Reference 1). Since the concept would reduce sfc deterioration, the benefits would increase with engine age relative to current engines of comparative age. Therefore, this concept was analyzed to determine potential fuel savings for engines with 3000 hours since last high pressure turbine maintenance. The predicted performance improvement was 0.8% at 3000 hours.

The estimated 0.5 percent reduction in cruise sfc for the roundness concept, based on test result, results in the block fuel savings shown in Table XII. The estimated annual fuel savings per aircraft for the above block fuel savings are also shown in this table.

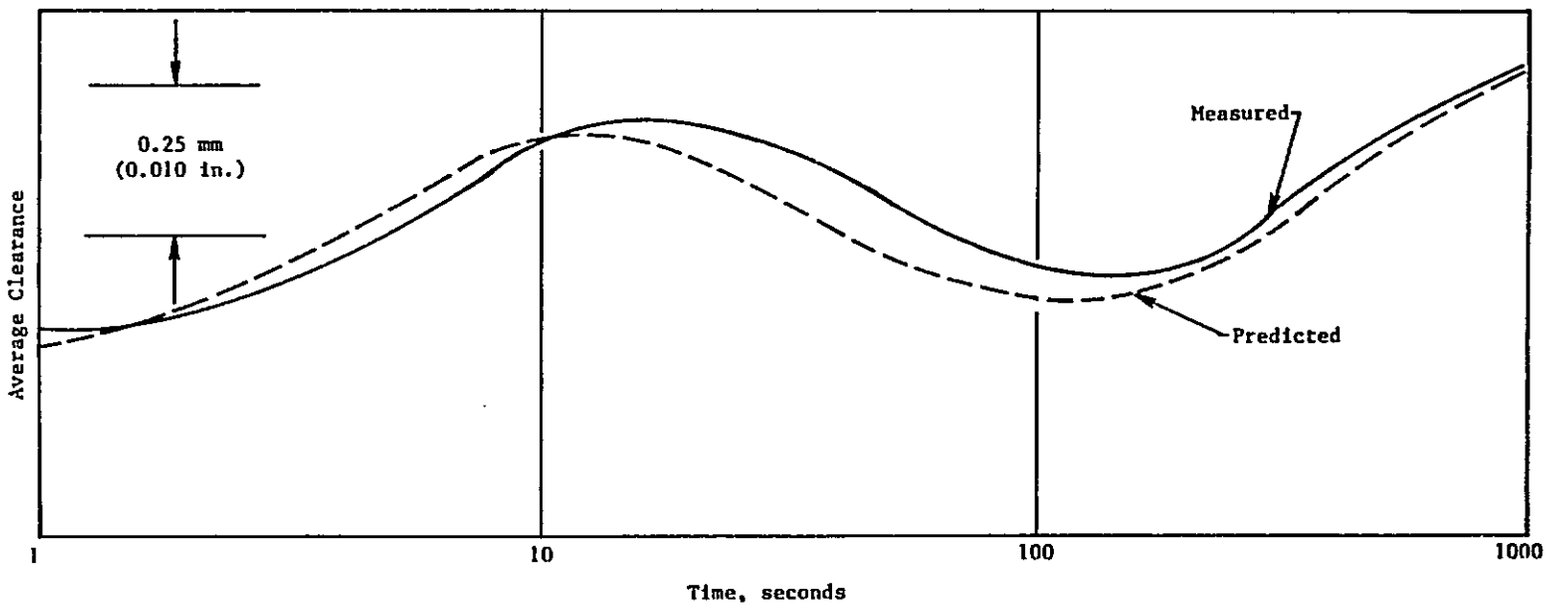

Figure 24. Clearance Versus Time During a Decel.

ORIGINAL PAGE IS
OF POOR QUALITY

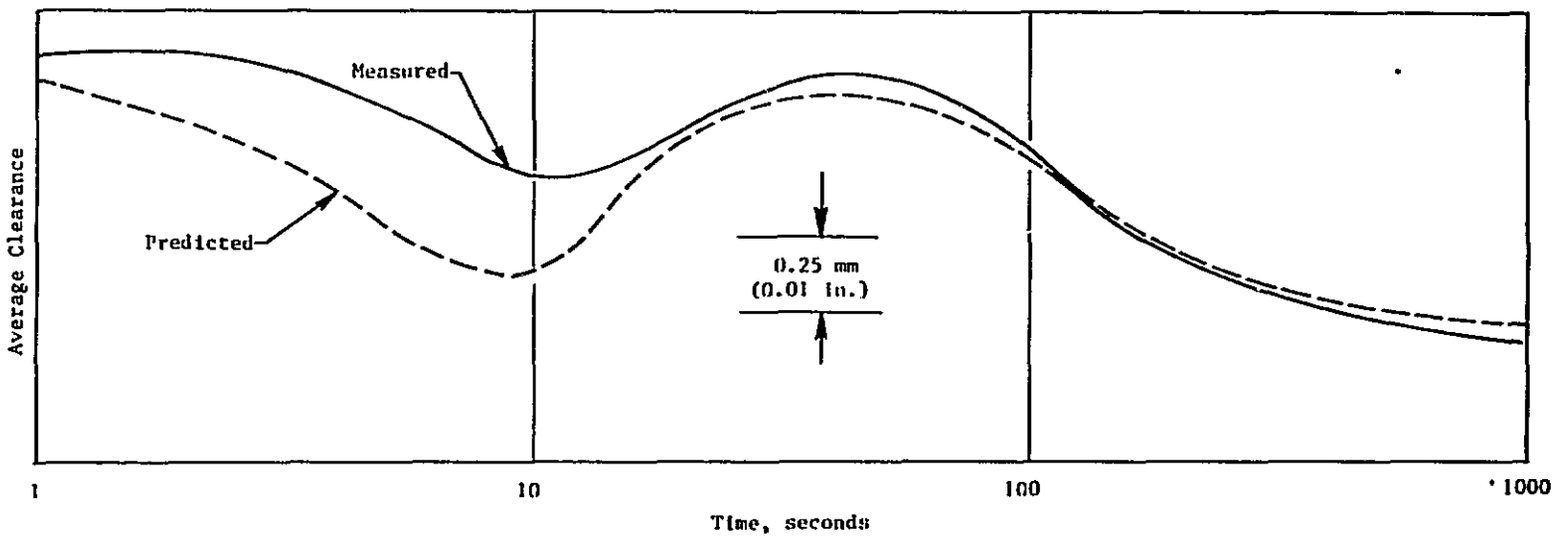

Figure 25. Clearance Versus Time During an Accel.

ORIGINAL PAGE IS
OF POOR QUALITY

ORIGINAL PAGE IS
OF POOR QUALITY

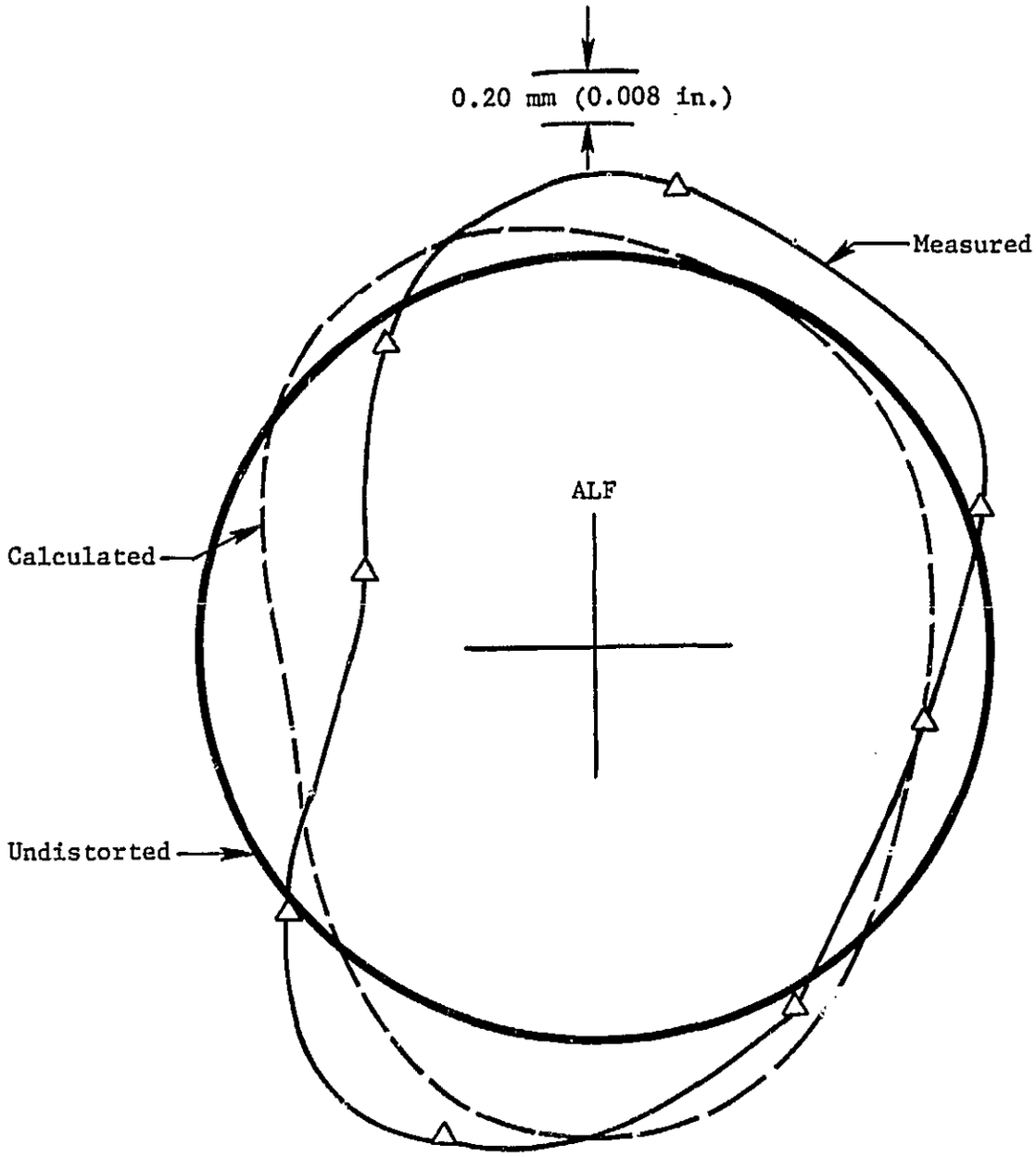

Figure 26. HPT Stator Out-of-Roundness Comparison, Takeoff.

Table XII. CF6 Engine With HP Turbine Roundness - Fuel Savings Per Aircraft

(Minimum Fuel Analysis, Cruise ΔSFC = -0.5% 3000 Hrs)

AIRCRAFT (Engine)	RANGE km	RANGE miles	BLOCK FUEL SAVINGS/AIRCRAFT kg	BLOCK FUEL SAVINGS/AIRCRAFT %	ANNUAL FUEL SAVINGS/AIRCRAFT l/AC/Yr	ANNUAL FUEL SAVINGS/AIRCRAFT gal/AC/Yr
DC-10-30 (CF6-50)	805	500	-44	-0.47	104,200	27,728
	2735	1700	-141	-0.55	157,500	41,911
	6275	3900	-273	-0.61	300,000	79,830
B-747-200 (CF6-50)	770	480	-25	-0.28	93,800	24,960
	3460	2150	-116	-0.55	187,500	49,894
	6195	3850	-236	-0.61	384,400	102,288

The economic assessment for the medium fuel price assumed for the study (Ref. 1) of 14.5¢/l (55¢/gal) for the DC-10-30 and 11.89¢/l (45¢/gal) for the B-747-200 is summarized in Table XIII.

Table XIII. CF6 Engine With HP Turbine Roundness - Economic Assessment of Payback Period and Return on Investment for New Buy.

(Medium Range, Medium Fuel Price, Minimum Fuel Analysis, Cruise ΔSFC = -0.5%, 3000 Hours)

AIRCRAFT (Engine)	FUEL PRICE ¢/l	FUEL PRICE (¢/gal)	PAYBACK PERIOD Years	ROI %
DC-10-30 (CF6-50)	14.53	(55) International	1.0	100
B-747-200 (CF6-50)	11.89	(45) (Domestic)	1.25	80

8.0 HIGH PRESSURE TURBINE ACTIVE CLEARANCE CONTROL

8.1 CONCEPT DESCRIPTION

The advantage of a HP Turbine active clearance control system for the CF6-6 engine is derived from the differences in the transient and steady state radial positions of the rotating and stationary components. Providing sufficient turbine blade tip clearance to prevent a rub during throttle burst to take-off power and during hot rotor reburst results in the cruise clearance being greater than desirable. The characteristics of the turbine which result in more open cruise clearances are rotor/stator relative radial thermal response differences, and differences in the elastic mechanical loads-rotational growth and pressure loads.

As the engine is accelerated, the elastic stretching of the rotor, as well as the inward deflection of the stator from pressure forces, both combine to reduce the tip clearance before the stator structure can heat up sufficiently to establish an increased radial position. An acceleration, performed when the rotor mass is hot but the stator mass is cold, termed a "hot rotor reburst", results in the greatest blade tip to shroud transient closure because the thermal growth of the rotor results in additional closure to that provided by the rotor elastic stretch and stator inward pressure deflection. The level of tolerable rub for a hot rotor reburst, therefore, effectively establishes the clearances for other operating points of interest. All of these other points, takeoff and cruise being the most significant in terms of fuel use, will operate at clearances that are less efficient than could be achieved if the hot rotor reburst condition did not require consideration.

There are two fundamental approaches to improve cruise clearance. One is to design the rotor and stator to respond transiently in as similar a manner as possible. Reducing the level of hot rotor reburst closure allows setting tighter clearances at cruise. This approach is called passive clearance control.

The other approach is to heat and cool structures, as appropriate, to open or close tip clearances such that efficient clearances can be achieved at cruise. This approach is called active clearance control.

This task encompassed the design and evaluation of an active system, shown in Figures 27 and 28, which incorporates aspects of passive response matching as well. The system incorporates the following features:

1. Segmented shroud hangers attached to a thermally stable mass.
   The shroud support structure consists of flanges that are isolated from the hot flowpath. Also, the entire shroud support structure is self contained in a separate high pressure turbine case.

2. The stator is not pressure sensitive.
   The shrouds are attached to the HPT case in a manner such that the application of pressure and mechanical loads will cause an outward radial deflection. This improves both transient and steady state clearances.

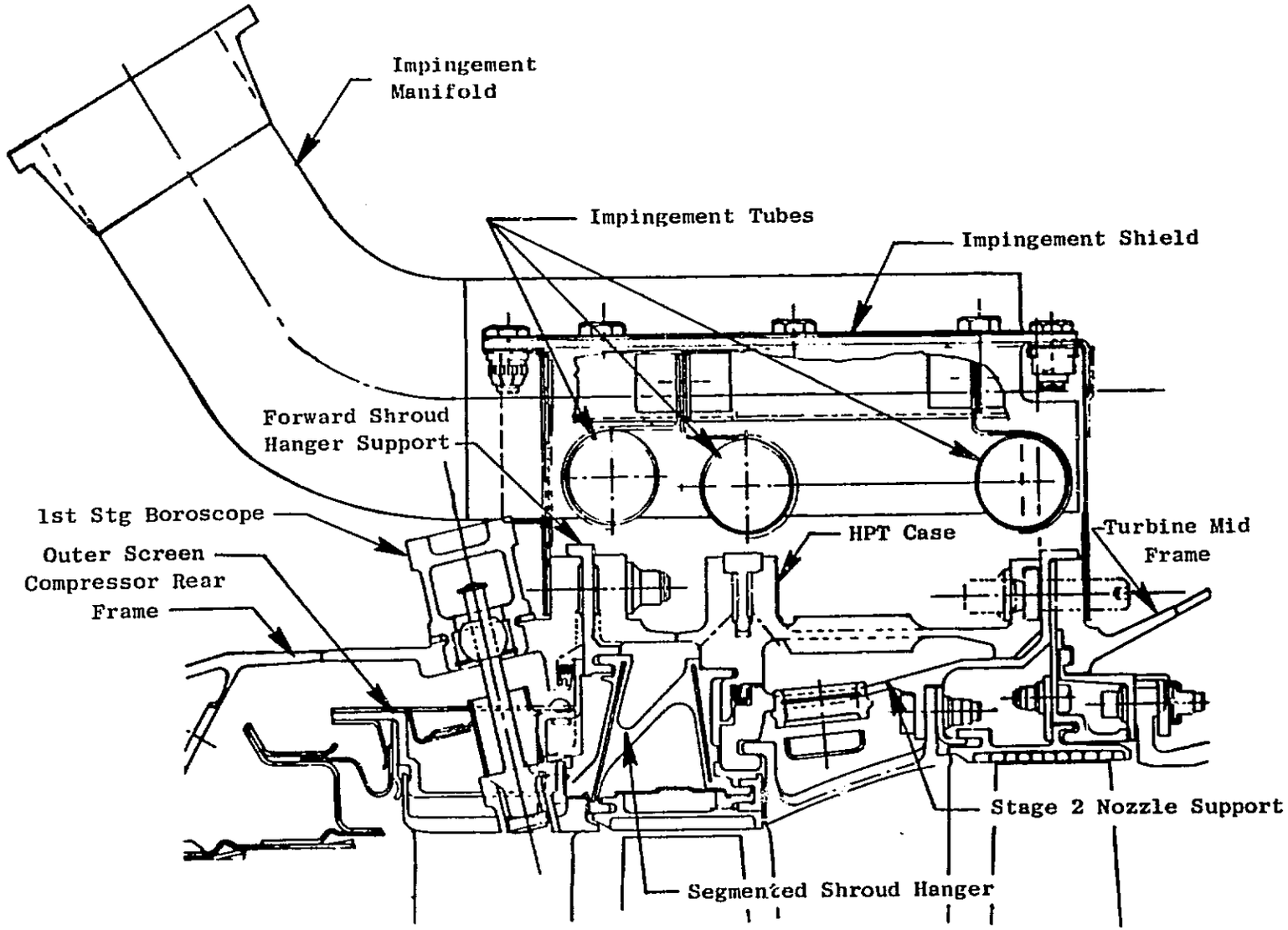

Figure 27. Active Clearance Control High Pressure Turbine.

ORIGINAL PAGE IS
OF POOR QUALITY

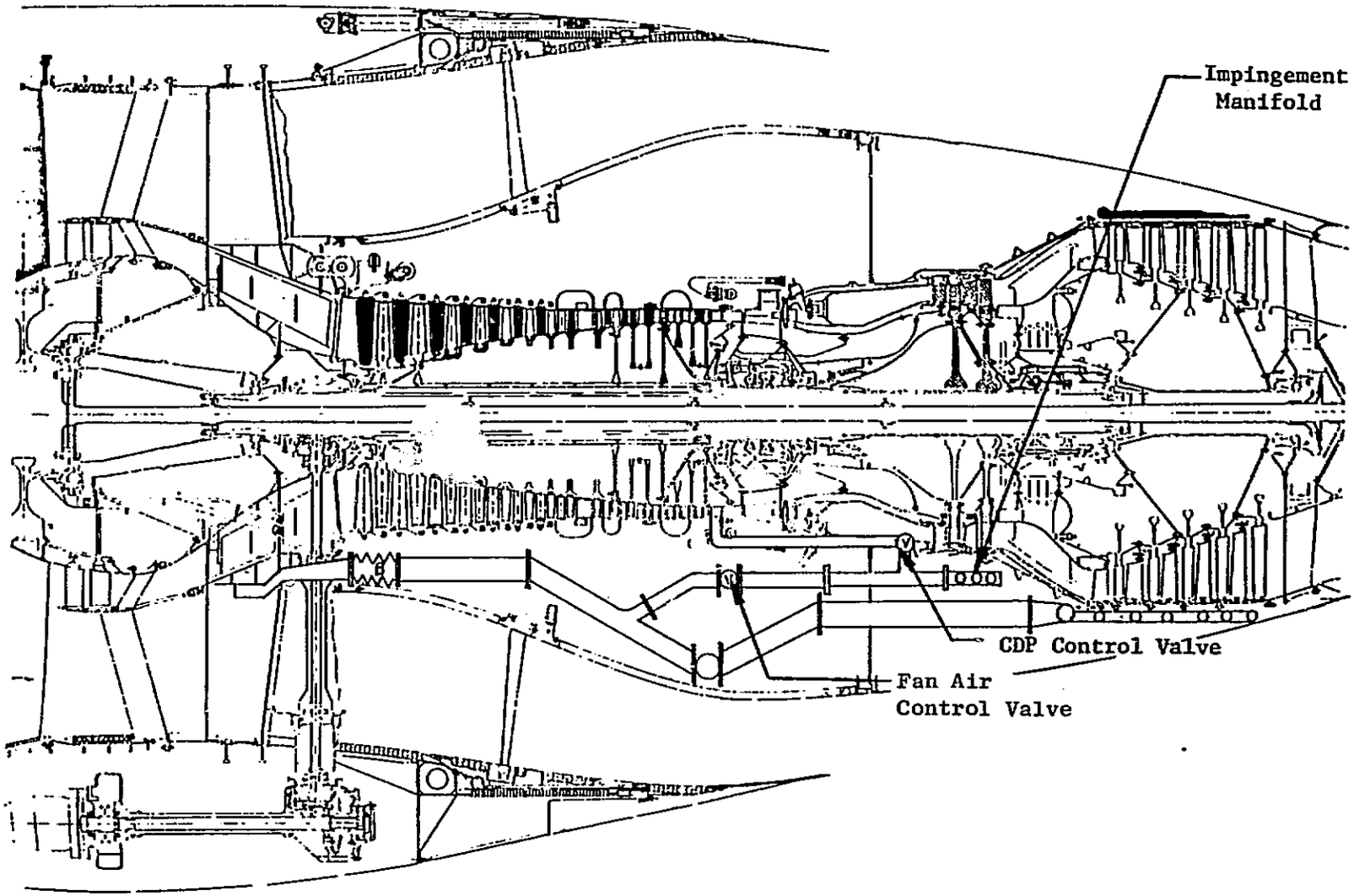

Figure 28. High Pressure Turbine Active Clearance Control Piping.

ORIGINAL PAGE IS
OF POOR QUALITY

3. Match, as closely as practical, the thermal response of the HPT case to the rotor.
   The thermal response of the HPT case is matched to the rotor by the impingement of compressor discharge air on the outside of the HPT case during an acceleration to take-off.

4. Cool HPT Casing at Cruise.
   The impingement of fan discharge air on the HPT casing reduces the HPT casing temperature and, therefore, the turbine blade tip-to-shroud clearance.

5. Control External Influences.
   As a further aid in controlling the HPT case temperatures, an impingement shield is placed around the HPT case. The impingement shield helps to control the flow of impingement air over the flanges and mitigates the effects of outside circumferential temperature variations.

The HPT ACC system utilizes two valves: a Compressor Discharge Pressure (CDP) valve and a fan air valve. The CDP valve opens at low engine core speeds and permits air, at compressor discharge conditions, to impinge on the HPT casing. This air increases the thermal response rate of the HPT case and allows tighter turbine blade tip-to-shroud clearances. The valve remains open for a period of 2 minutes after throttle motion. The fan air valve is opened after the engine is at a cruise power setting. This permits fan discharge air to impinge on, and cool the HPT case and consequently reduces the turbine blade tip-to-shroud operating clearance. This reduced clearance increases turbine efficiency and decreases specific fuel consumption. A controllable valve was employed during testing so that engine performance change vs. cooling flow could be determined.

The impingement system consists of three impingement tubes covered by an impingement shield. The tubes are approximately 25 mm (1 inch) in diameter and contain 1100 impingement holes per tube. The impingement shield prevents external temperature gradients from adversely affecting the HPT casing temperature.

The impingement tubes are attached to the impingement shield by brackets that allow for the relative thermal expansion/contraction of the impingement tubes and case. The impingement shield is attached to the engine by the compressor rear frame/HPT case and HPT case/turbine midframe mount bolts. Installed in the impingement shield is an impingement manifold which acts as a plenum for the impingement air distribution system.

The HPT case performs the following function:

1. Provides a thermally stable mass, and

2. Provides a means of supporting the internal structure.

The HPT case allows better control of build up clearances. A segmented shroud hanger is used to support the first stage HPT shroud. It is rabbeted into the HPT case so that, as the HPT case expands or contracts, the shroud hanger moves with it.

8.2 SUMMARY OF TEST RESULTS

An Active Clearance Control system has been developed for the CF6-6 HP Turbine which reduces fuel consumption and performance degradation (Reference 6). The system was evaluated in performance tests and running clearance measurements were taken using the high energy x-ray (HEX) techniques.

The HP Turbine Active Clearance Control System demonstrated a repeatable sfc reduction, at sea level, of 1.3 percent with a potential SFC reduction of 1.75 percent. This is equivalent to a sfc reduction, at altitude, of 0.7-0.9 percent respectively. The methods used to estimate the performance improvement have been shown to be accurate and valid. Therefore, based on the test results it can be concluded that the system satisfies the design intent of 0.6 percent reduction in altitude SFC, and that the performance improvement gained by an active clearance control system can be accurately predicted and measured. Also, it has been shown that only minor design modifications to the impingement tube support hardware would be required to achieve the potential performance improvement of 0.9 percent sfc reductions at altitude.

Throughout the engine testing sequence the system did not cause excessive HPT deterioration, and has demonstrated its ability to retain the required sfc reduction.

8.3 ECONOMIC ASSESSMENT

The HP Turbine Active Clearance Control Performance Improvement Concept was evaluated by Douglas for the DC-10-10 Aircraft, under Task 1 of the program (Reference 1), for an estimated cruise SFC reduction of 0.6 percent. These results were updated for the 0.7 percent SFC reduction demonstrated in this program. The estimated annual fuel savings for aircraft are shown in Table XIV.

Table XIV. HP Turbine Active Clearance Control Fuel Savings Per Aircraft

(Minimum Fuel Analysis, Cruise ΔSFC =-0.7%)

Aircraft (Engine)	Range km	Range (Miles)	Block Fuel Savings/AC kg	Block Fuel Savings/AC %	Annual Fuel Savings/AC Liters/AC/Year	Annual Fuel Savings/AC Gal/AC/Year
DC-10-10 (CF6-6)	645	400	11	0.13	30,200	7,979
	1690	1050	71	0.44	132,600	35,033
	3700	2300	185	0.58	184,000	48,613

The economic assessment for the medium fuel price assumed for the study of 11.9¢/Liter (45¢/gal) for domestic operation (Reference 1) is summarized in Table XV. Because of the increase in the cost of fuel by over 100 percent since the study was conducted the payback period would be significantly reduced when based on current fuel prices.

Table XV. CF6 Engine with HP Turbine Active Clearance Control Concept - Economic Assessment of Payback Period and Return on Investment for New Buy.

(Medium Range, Medium Fuel Price, Minimum Fuel Analysis, Cruise ΔSFC =-0.7%)

Aircraft (Engine)	Fuel Price ¢/l	Fuel Price (¢/Gal)	Payback (Years)	ROI (%)
DC-10-10 (CF6-6)	11.89	(45)	5.8	15

9.0 LOW PRESSURE TURBINE ACTIVE CLEARANCE CONTROL

9.1 CONCEPT DESCRIPTION

Current CF6-50 Production Low Pressure Turbine Cooling System

The current CF6-50 low pressure turbine (LPT) case is cooled by an externally mounted impingement manifold cooling system. The major elements are shown schematically on the CF6-50 engine cross section in Figure 29, and the LPT manifold is illustrated in Figure 30. Air is bled from the fan discharge flowpath via a flush inlet in the fan reverser wall and is then piped to a plenum where the reverser interfaces with the radial fire seal.

Downstream of the plenum the air enters another pipe (inside the core cowling) which mates with an engine pipe via a spring-loaded compression seal commonly referred to as the "kiss" seal. The engine pipe is plumbed to an inlet in the bottom half of the LPT cooling manifold with the top and bottom halves interconnected via pipes mating in a slip joint.

The manifold consists of a network of axial and circumferential tubes. The axial tubes distribute the air to the circumferential tubes (total of 7) which are axially spaced to impinge air on the exterior of the LPT case nozzle and shroud support hooks.

The current LPT cooling manifold was designed to ensure adequate case life by reducing thermal gradients between the hooks and casing skin during transient engine operation, maintain an overall casing temperature at takeoff consistent with the design life requirements of the part, and provide a nominal amount of performance improvement due to the reduction of casing temperatures relative to those which would exist with no cooling flow. It should be noted that the current system is passive in that no attempt is made to alter the percentage of the fan flow supplied at various operating conditions through the use of a flow control device such as a valve. The flow area is constant at all engine operating conditions.

Performance Improvement and Active Clearance Control (ACC) Concept

The basic goal of this program was to develop an LPT cooling system which would improve LPT efficiency, thereby reducing specific fuel consumption (sfc) by reducing the radial rotor/stator clearances at cruise conditions. The concept for achieving this reduction in cruise clearances consists of two parts: (1) the case cooling flow is intentionally reduced during transient, takeoff and climb-out, and descent conditions which allows the case to get hotter and "grow" away from the rotor tips, which reduces transient rubs in the stator honeycomb; and (2) the case cooling flow is significantly increased at cruise conditions, causing the case to be cooler and "shrink in" toward the rotor, which reduces the operational clearances. (Reference 7)

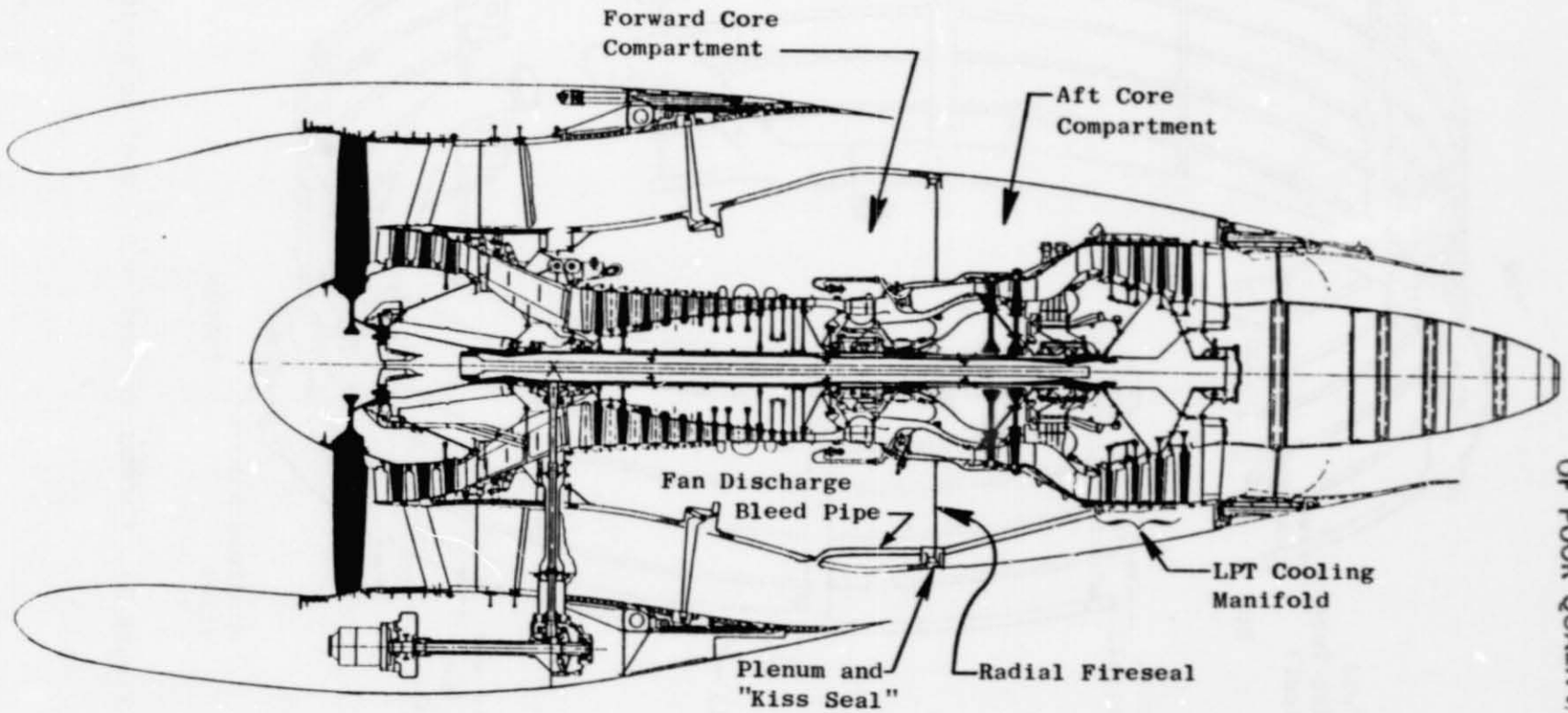

Figure 29. The General Electric CF6-50 Full Engine Cross Section.

ORIGINAL PAGE IS
OF POOR QUALITY

ORIGINAL PAGE IS
OF POOR QUALITY

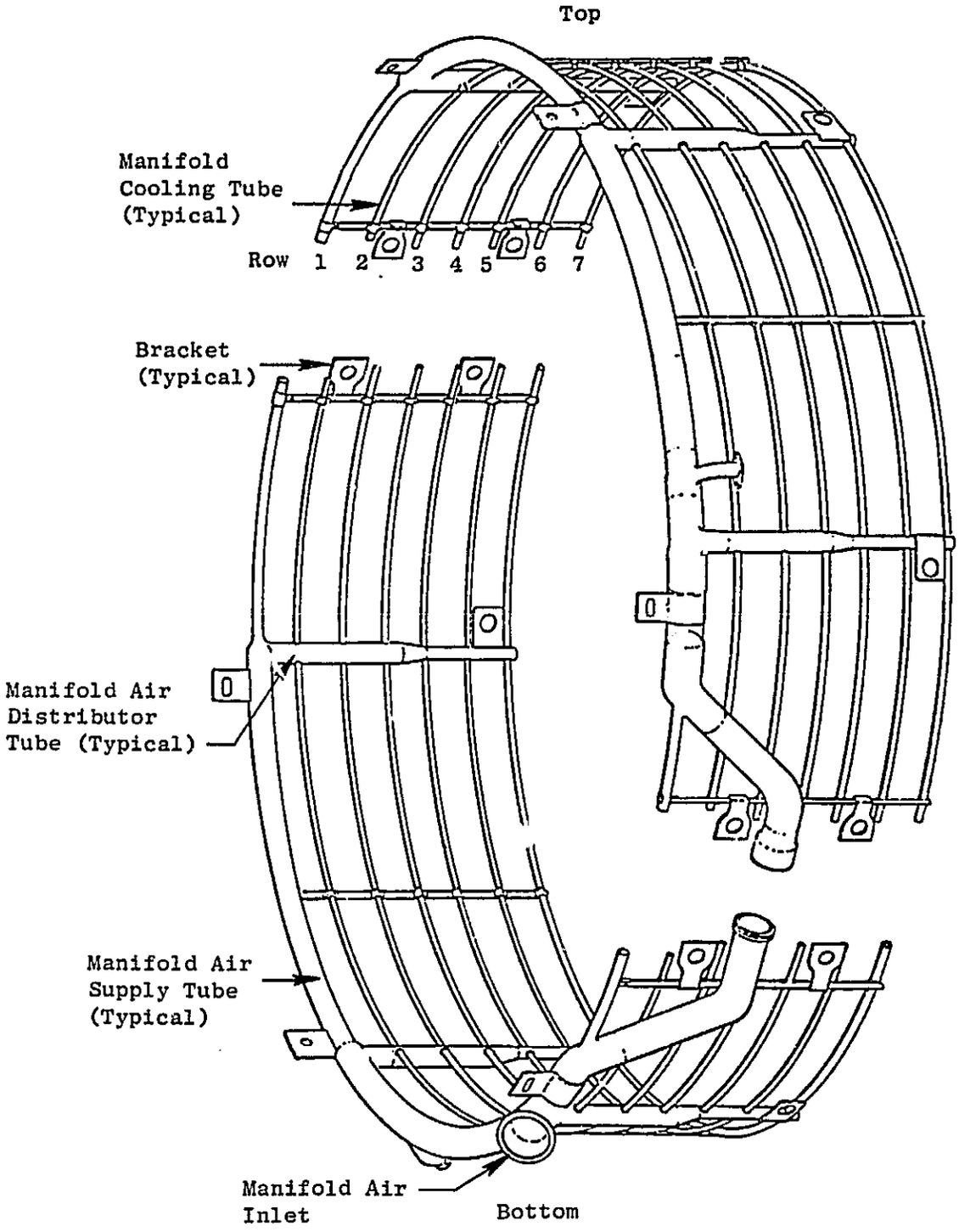

Figure 30. Current Production LPT Cooling Manifold.

To further illustrate this concept, a typical stator shroud honeycomb wear (rubout) pattern is examined (interstage seal honeycomb patterns would be similar). Figure 31 illustrates a typical LPT stator shroud wear pattern resulting from the relative motion of rotor and stator components during a transient operation, the difference in the thermal responses of the rotor and stator, and the growth of the rotor due to centrifugal loading create relative motion between the rotor and stator in both the radial and axial directions. The arrows indicate the direction of the blade tip motion relative to the shroud. Time is nonlinear along the path. Figure 31 also depicts the estimated cruise clearance reductions due to the reduced flow during the takeoff and climbout transient and the increased flow at cruise operation. It was estimated that the achievable reduction in clearance per stage due to increased flow at cruise was 0.50 mm (0.020 inch) with an additional 0.25 mm (0.010 inch) gained due to the reduced flow during takeoff. This level of clearance reduction, when applied to the stage 1-4 blade tip/stator shrouds and the stage 2-4 rotor/stator interstage seals, was estimated to result in a cruise sfc reduction of approximately 0.3 percent.

Unique Features of LPT ACC Cooling Systems

A new LPT manifold was designed with more than twice the flow capacity of the present system. The manifold sizing, consistent with the case temperature reduction required for the planned performance improvement, was accomplished with detailed heat transfer studies utilizing information (available prior to this program) on current production manifold airflow rates, case temperatures and heat transfer coefficients and General Electric's THTD computer program. The ACC manifold is depicted in Figure 32.

The reduced flow at takeoff was accomplished by adding a flow control valve in the manifold supply pipe from the kiss seal interface. It was decided that the kiss seal interface and the piping upstream of the kiss seal would remain unchanged for the convenience of prospective customers. The development of the ACC valve and its associated controls logic was not part of this program. However, a description of the anticipated valve to be used in this system and its mode of operation is as follows. The valve would be pneumatically operated and spring loaded closed. During takeoff and climbout (at altitudes below 6,688 m/22,000 feet) the valve would remain in the nominally closed position but would permit a "low" flow equivalent to the flow desired at takeoff conditions. After achieving an altitude of 22,000 feet, a barometric valve would actuate and port actuation air to the ACC valve causing it to open and provide the increased cooling flow at cruise conditions. During descent, at altitudes below 22,000 feet, the ACC valve would move to the low flow (closed) position.

The unique features, relative to the current production LPT cooling system, of each component of the LPT ACC cooling system are enumerated below:

LPT Manifold

- New hardware design.
- Takeoff flow reduced from 0.152 kg/sec (0.335 lb/sec) to 0.045 kg/sec (0.10 lb/sec).

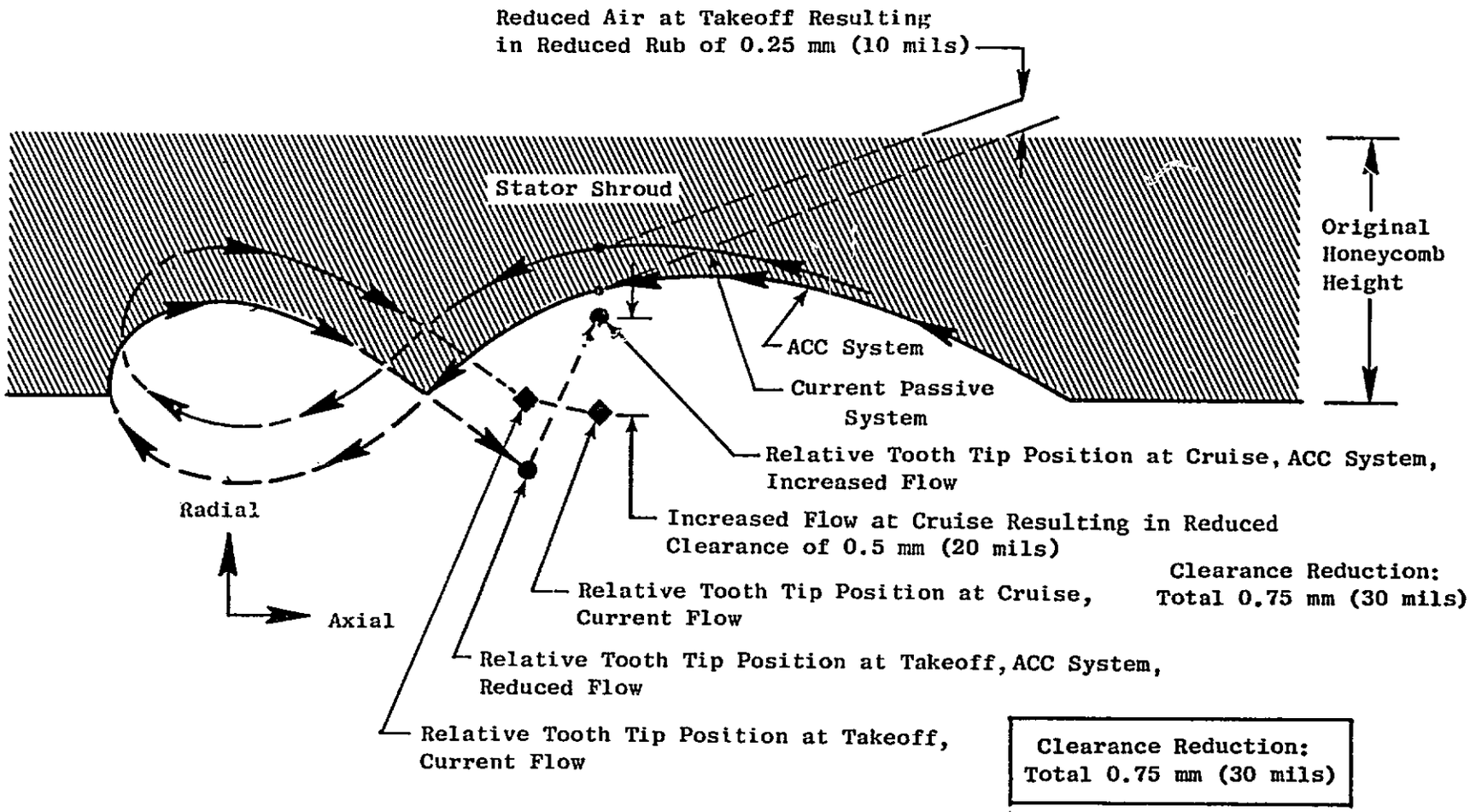

Figure 31. LPT Stator Shroud Honeycomb Wear Pattern.

OF POOR QUALITY

ORIGINAL PAGE IS
OF POOR QUALITY

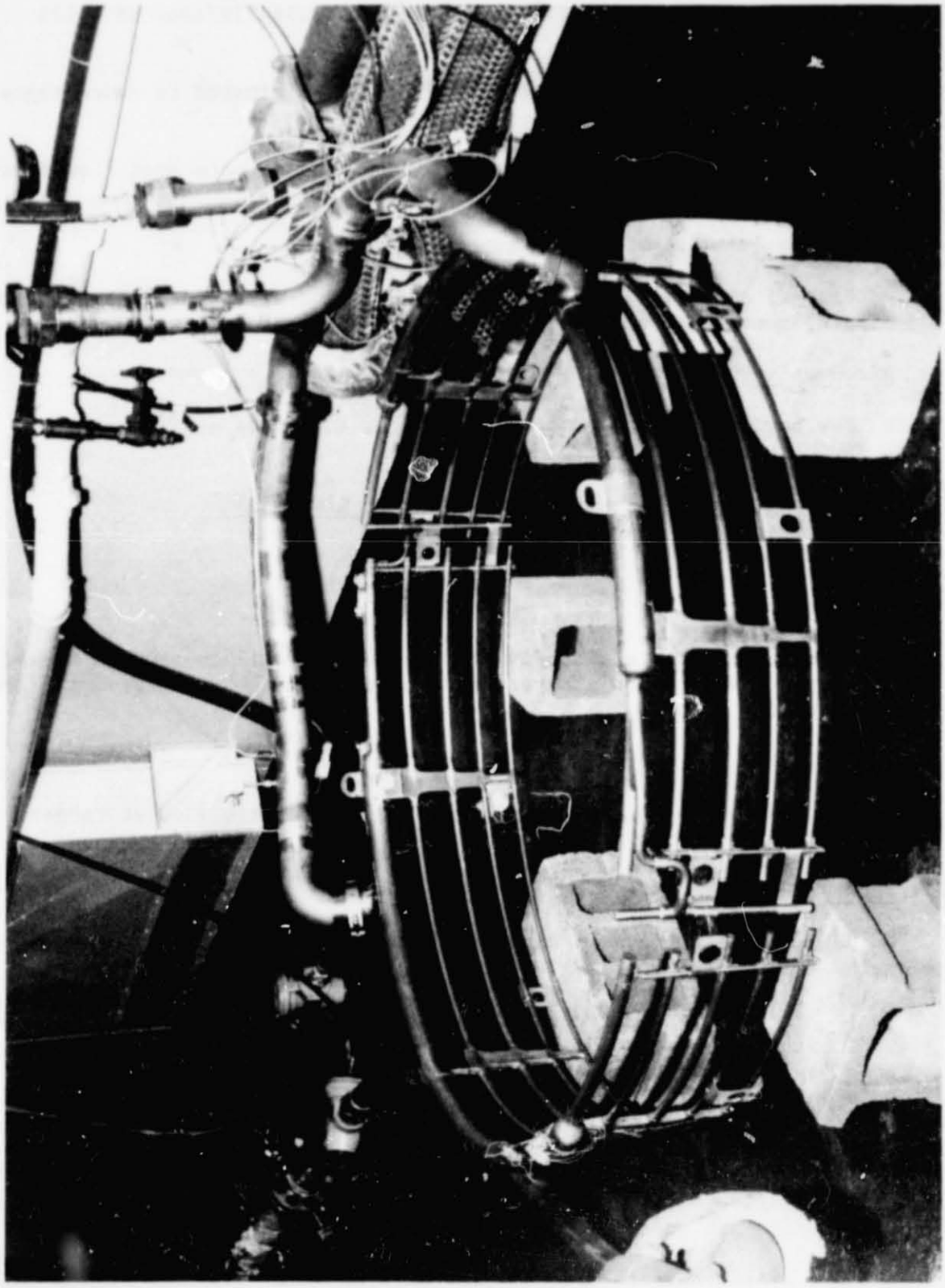

Figure 32. ACC LPT Cooling Manifold.

- Cruise flow increased from 0.074 kg/sec (0.164 lb/sec) to 0.174 kg/sec (0.385 lb/sec).

- Last two (Stage 4) circumferential tubes eliminated to concentrate flow on forward hooks.

- Separate air supplies for each half to provide more even flow distribution.

- Horizontal flange cooling tubes added.

- Size of circumferential tubes increased and size and spacing of impingement holes changed to accommodate increased flow.

Air Supply Piping: Kiss Seal to Manifold

- New hardware design to accommodate the ACC valve and separate air supplies to each manifold half.

Air Supply Piping: Reverser Interface to Kiss Seal

- No change.

Fan Air Scoop

- Scoop added over air supply port in cowling wall to provide additional supply pressure and, therefore, assist in achieving additional flow required.

ACC Valve

- Valve added in manifold supply piping to modulate flow at takeoff conditions.

9.2 SUMMARY OF TEST RESULTS

An LPT ACC cooling system has been designed, manufactured, and component and engine tested (Reference 7).

The airflow component test demonstrated that the ACC system is capable of a significant increase in flow, relative to the current production system, and that the flow split among the various impingement tubes was very close to the design intent.

Based on the results of the vibration component test and the subsequent correlation with strain gage data from the instrumented engine test, the ACC manifold is judged to be structurally sound with no fatigue problems anticipated for a production application.

The LPT stator temperature and flow data obtained from the instrumented engine test enabled the heat transfer (THTD) model of the LPT case to be refined

so that predicted temperatures matched those measured during the instrumented engine test. The development of this data matched model, made possible by this program, is significant because LPT stator case temperatures can now be accurately predicted at any operating condition. It should also be pointed out that the heat transfer coefficients, in various internal areas of the LPT case, which were developed during the data matching process, are significantly different than those assumed to be correct prior to the inception of this program. These coefficients have a significant effect on predicted LPT case temperatures.

An axisymmetric shell, stress and deflection (CLASS/MASS) model of the LPT case, also developed during this program, was used to determine the delta clearances of the ACC system relative to the production system at various conditions including the SLS simulated cruise test condition and altitude cruise. The LPT case temperatures which were input to the model were those predicted by the THTD model which was discussed previously. In addition to the value to this program with respect to calculation of delta clearances, the CLASS/MASS model can also be used to determine stresses and deflections of the LPT case with the current production manifold system, thereby providing a better structural capability assessment of the LPT case than was possible prior to this program.

The instrumented engine test data also established Δsfc versus cooling flow trends (for both cooling systems) and demonstrated the concept of sfc reduction due to increased cooling flow. The calculated delta performances of both systems relative to the zero flow condition and of the ACC system relative to the production system agreed closely with the delta performances demonstrated during the instrumented engine test. This is significant since this correlation verifies the various performance derivatives used in the analytical definition of the performance of both systems.

The predicted performance gains of the ACC system (relative to the current production system) at altitude cruise, based on the effects of increased cooling flow at cruise, as derived from the forced (matched-to-test data) and ideal THTD models are -0.019 percent Δsfc and -0.146 percent Δsfc, respectively. The ACC cooling system did not develop sufficient case temperature reductions (and corresponding clearance reductions) which were required to meet the program goal of -0.2 percent Δsfc due to increased cooling flow at cruise conditions (The overall program goal also included a 0.1 percent reduction in sfc due to reduced cooling flow during takeoff, climbout and descent conditions which was not demonstrated during the test program.) However, based on the various delta temperature (and subsequent Δsfc) versus cooling flow trends demonstrated during this program, it is felt that the required level of temperature reductions are achievable.

As part of this program, two improved manifold designs were formulated. The first design, which retained the restriction of no change in the manifold supply piping upstream of the kiss seal, resulted in a predicted performance gain of 0.242 percent Δsfc. The second design, which imposed no restriction on the size or routing of the manifold supply piping, yielded a predicted performance improvement of 0.439 percent Δsfc. (Note: These performance gains include only the effects of increased cooling flow at cruise and they are relative to the current production system).

Finally, if the possible performance gain due to the reduced flow during takeoff, climbout, and descent conditions is added to the performance gains due to increased flow at cruise, the following performance gains are predicted:

Cooling System Identification	Predicted Performance Gain Relative to Current Production System (percent Δsfc)
ACC Forced	0.149
ACC Ideal	0.276
Improved Impingement	0.372
Optimized Design	0.569

9.3 ECONOMIC ANALYSIS

The Low Pressure Turbine Active Clearance Control concept was previously evaluated for an estimated cruise sfc improvement of 0.3 percent under Task 1.0 of this program (Reference 1). Based on the results of this investigation, the improvement for the concept has been revised and is being presented in the form of two options. The first option, referred to as Option A in the subsequent economic analysis, represents an estimated improvement of 0.25 percent in cruise sfc due to an optimized manifold system with certain restrictions imposed on the manifold supply piping (i.e., no change in the piping upstream of the kiss seal). The second option, referred to as Option B in the following economic analysis, represents an estimated improvement of 0.45 percent in cruise sfc due to an optimized manifold system with no restrictions imposed on the size or routing of the manifold supply piping.

The reductions in cruise sfc presented above result in the annual fuel savings shown in Table XVI.

Table XVI. LP Turbine Active Clearance Control Fuel Savings Per Aircraft (Minimum Fuel Analysis)

Aircraft (Engine)	Range		Annual Fuel Savings/Aircraft Liters/AC/Year		Gallons/AC/Year	
	km	miles	Option A	Option B	Option A	Option B
DC-10-30 (CF6-50	2753	(1700)	55,500	99,900	14,663	26,394
B747-200 (CF6-50)	3460	(2150)	90,800	163,500	23,989	43,197

The economic assessment for the medium fuel price assumed for the study (Reference 1) of 14.5¢/liter (55¢/gal) for the DC-10-30 and 11.89¢/liter (45¢/gal) for the B747-200 is summarized in the following table:

Table XVII. CF6 Engine with LP Turbine Active Clearance Control Concept - Economic Assessment of Payback Period and Return on Investment for New Buy.

(Medium Range, Medium Fuel Price, Minimum Fuel Analysis)

Aircraft (Engine)	Fuel Price ¢/l	Fuel Price (¢/gal)	Payback (Years) Option A	Payback (Years) Option B	ROI (Percent) Option A	ROI (Percent) Option B
DC-10-130 (CF6-50)	14.5	(55)	3.5	2.1	26	49
B747-200 (CF6-50)	11.89	(45)	3.5	2.1	26	49

10.0 SHORT CORE EXHAUST NOZZLE

10.1 DESCRIPTION OF CONCEPT

The Short Core Nozzle is a replacement for a deactivated Core Reverser Nozzle or the Long Fixed Core Nozzle, both of which are in use on the CF6-50 high bypass turbofan engine (Reference 8). A comparison of the Short Core Nozzle with the Long Fixed Core Nozzle is shown in Figure 33. A comparison of the nacelle and pylon for the short exhaust system with the production DC-10-30 installation is shown in Figure 34.

The Long Fixed Core Nozzle was introduced for DC-10 and B747 aircraft for those airlines which do not require core stream reversing to meet airline imposed landing requirements. The lightweight A300B aircraft do not require a core exhaust reverser, and Long Fixed Core Nozzles are used. These nozzles have essentially the same flow lines as the Core Reverser Nozzle. Both the Long Fixed Core Nozzle and Short Core Nozzle Systems provide significant weight reductions by removal of the deflector structure, blocker doors, and actuation and position sensing hardware.

The Short Core Nozzle system requires reduced diameter fan flow lines aft of the fan reverser; therefore, recontouring the engine core cowl as well as the core nozzle is needed. The reduced diameters are due to the elimination of the exhaust reverser function. The reduced diameter cowling and shorter nozzle, therefore, reduce weight, core pressure loss and scrubbing drag. This drag and pressure loss reduction along with a recontoured lower pylon fairing was estimated to result in a significant sfc reduction during cruise. A weight reduction of 45 kg (100 lbs) over the Long Fixed Core Nozzle, and 147 kg (325 lb) over the Core Reverser Nozzle can be achieved with the Short Core Nozzle.

An assessment of Short Core Nozzle performance improvement was obtained from isolated nacelle model tests at FluiDyne in March 1978. The model test included evaluation of both the Long Fixed Core Nozzle and the Short Core Nozzle to obtain a direct measure of the improvement with the Short Core Nozzle. The static test demonstrated improvements in gross thrust coefficient with the Short Core Nozzle of 0.0036 and 0.0037 at maximum cruise power and normal cruise power pressure ratios, respectively. Wind tunnel tests demonstrated an improvement of 0.0039 in gross thrust coefficient at M 0.82 cruise. This improvement is equivalent to approximately 1 percent net thrust (~1 percent sfc) at 40,000 N (9,000 lb) of net thrust and 10,668 m (35,000 ft) altitude.

Installation of the Short Core Nozzle is readily adaptable to all CF6-50 series engines on the A300, DC-10-30, and 747 airplanes. Utilization of the Short Core Nozzle requires a different core cowl and lower pylon fairing.

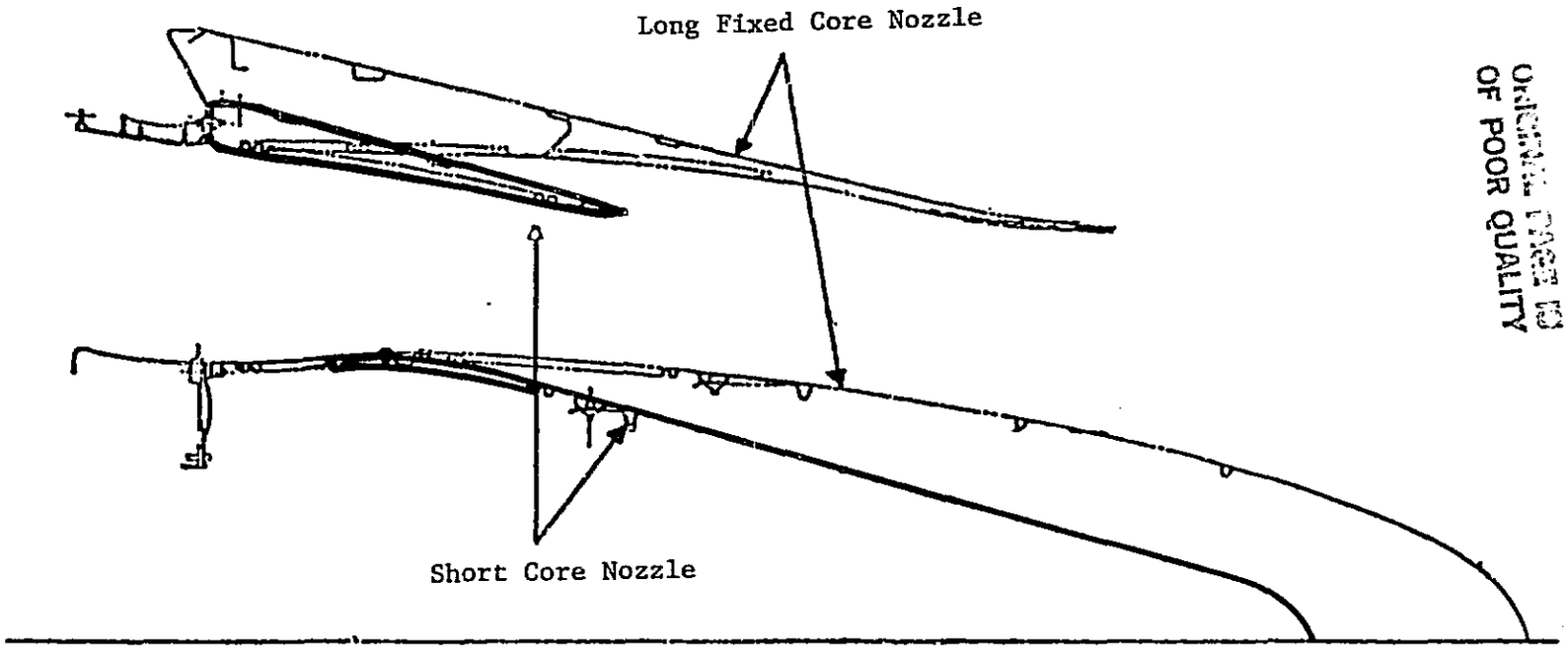

ORIGINAL PAGE IS
OF POOR QUALITY

Figure 33. Comparison of Short Core Nozzle to Long Fixed Core Nozzle.

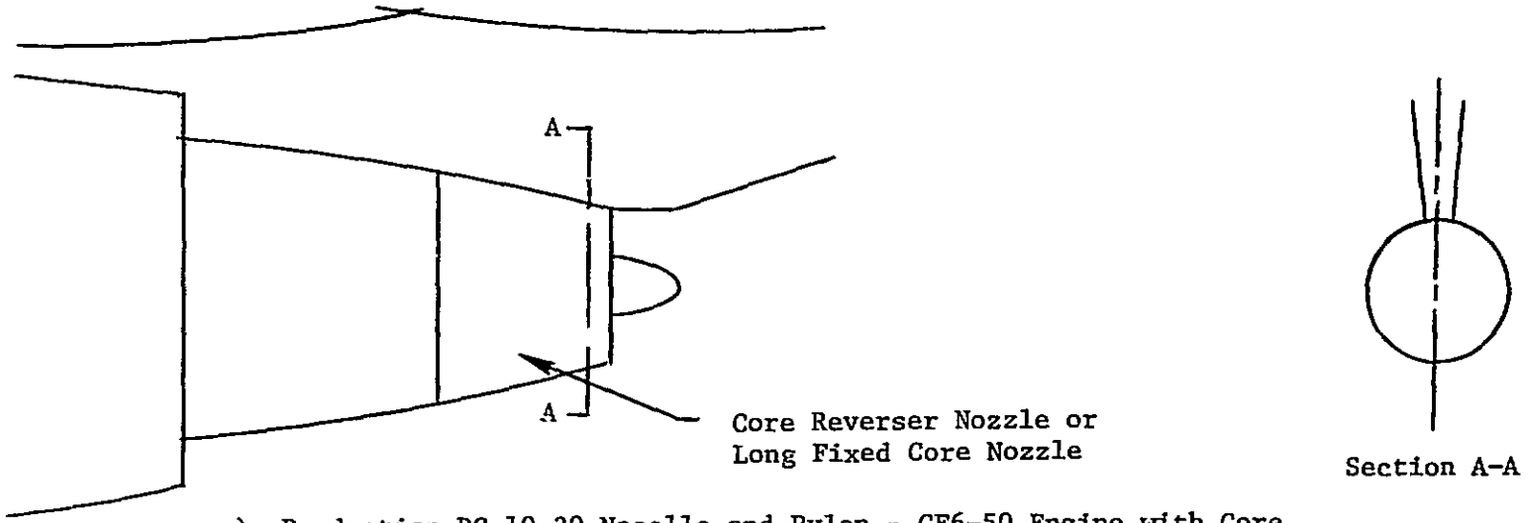

a) Production DC-10-30 Nacelle and Pylon - CF6-50 Engine with Core Reverser Nozzle or Long Fixed Core Nozzle.

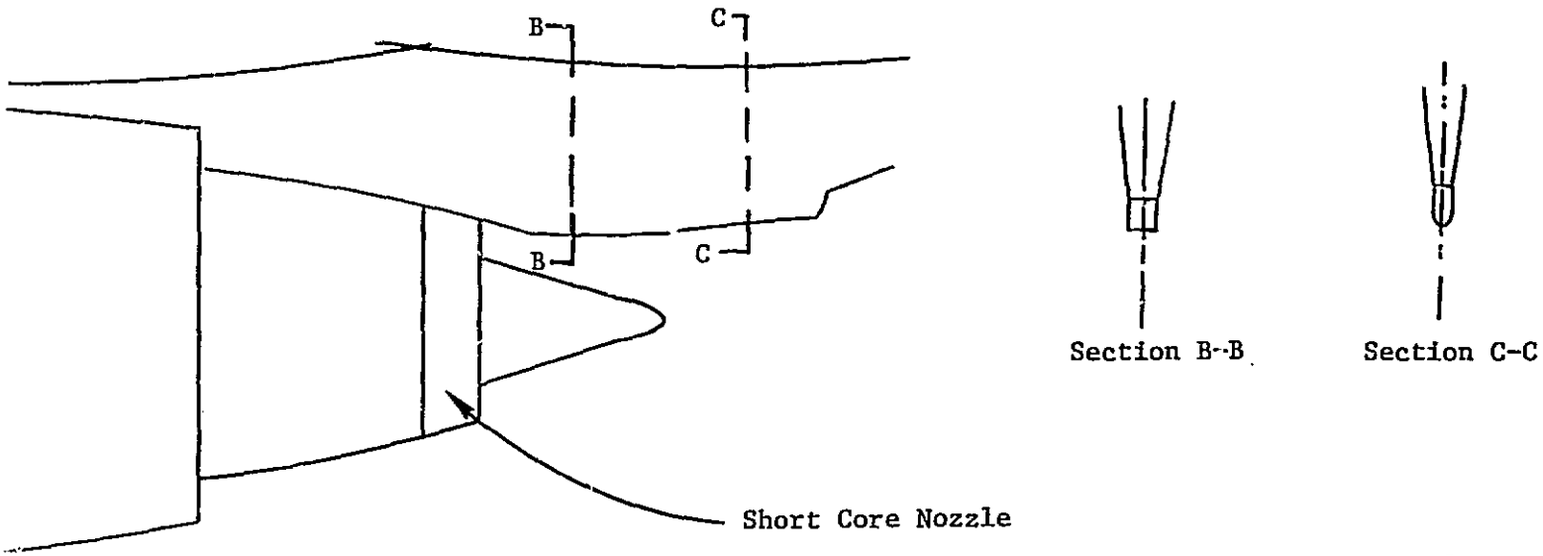

b) Modified Nacelle and Pylon Fairing - CF6-50 Engine with Short Core Nozzle.

Figure 34. CF6-50 Nacelle-Pylon-Core Nozzle Comparison.

ORIGINAL PAGE IS
OF POOR QUALITY

10.2 SUMMARY OF TEST RESULTS

The Short Core Nozzle has been evaluated in three full scale engine ground tests (Reference 8). The main results of these tests are summarized below:

Performance Test - The CF6-50 engine back-to-back static performance test verified within data accuracy the scale model test results and indicated a thrust coefficient improvement of approximately 0.3 percent as shown on Figure 35. This improvement results in a cruise sfc reduction of 0.9 percent at M 0.85, 10,668 m (35,000 ft) altitude for a thrust level of 37,800 N (8,500 lb).

At equal effective exhaust nozzle area, the Short Core Nozzle showed improvements in gross thrust at engine pressure ratio and fan speed over the Long Fixed Core Nozzle. Therefore, the Short Core Nozzle does not require a power management change to meet minimum thrust at fan speed.

Acoustic Test - The CF6-50 engine back-to-back static acoustic test demonstrated that the Short Core Nozzle produces almost identical community noise levels as the Core Reverser Nozzle at identical thrust levels. Dominant noise components of the CF6-50 engine, such as fan, low pressure turbine, and core jet were not significantly impacted by the Short Core Nozzle.

Endurance Test - The CF6-50 engine static endurance test demonstrated the life capability of the Short Core Nozzle hardware in 1000 flight cycles without any indication of distress.

Flight Tests - Flight tests conducted outside the program indicate that a cruise sfc reduction of at least 0.9 percent is attainable on the Airbus Industrie A300B and the DC-10-30 aircraft with the installation of the Short Core Nozzle.

10.3 ECONOMIC ASSESSMENT

The Short Core Nozzle concept was evaluated by Boeing and Douglas under Task 1 of this program (Reference 1). Boeing studied the concept for the B747-200 aircraft for 1 percent cruise sfc improvement and Douglas evaluated the concept for 2 percent sfc improvement, 1 percent for internal performance improvement and 1 percent for reduced interference drag.

The engine ground test demonstrated a gross thrust coefficient improvement of approximately 0.3 percent which is equivalent to a cruise sfc improvement of 0.9 percent. Preliminary assessments of flight testing conducted by Airbus Industrie on the A300B airplane and by Douglas on the DC-10-30 aircraft outside this program support the sfc improvement.

The 0.9 percent reduction in cruise sfc due to the internal thrust coefficient improvement results in the block fuel savings shown in Table XVIII for the minimum fuel consumption mission. This is based on the data presented in Reference 1.

ORIGINAL PAGE IS
OF POOR QUALITY

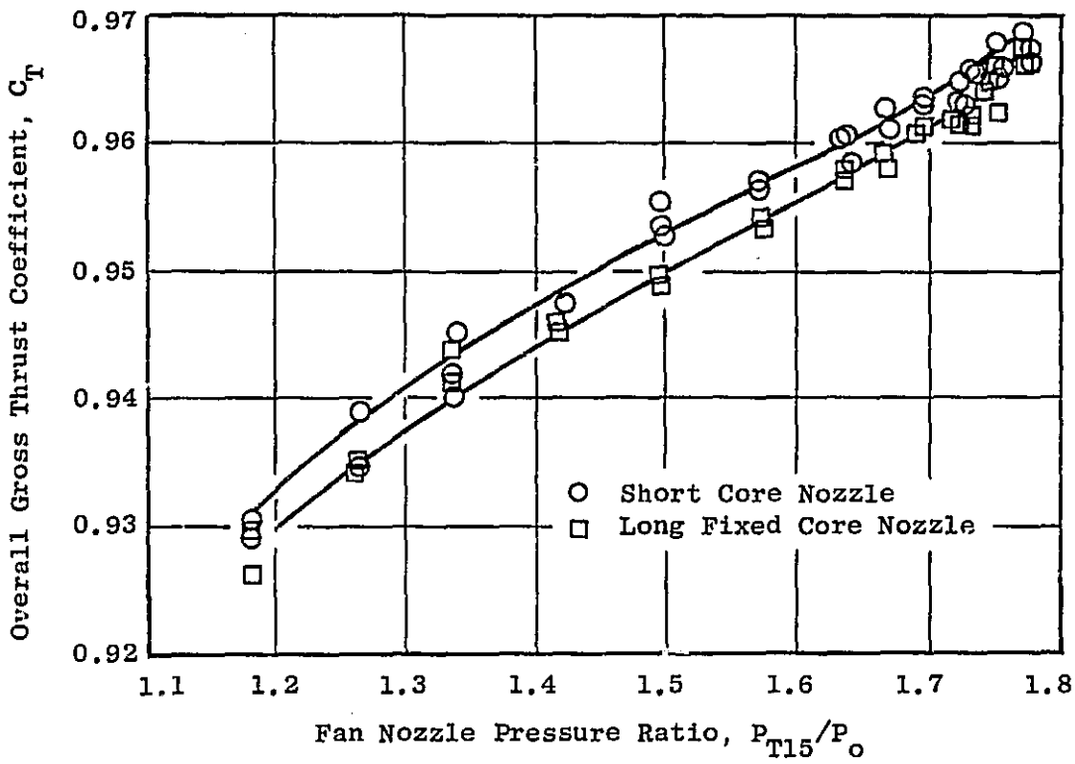

Figure 35. Test Cell Data, Fan Nozzle Overall Gross Thrust Coefficient.

For the Boeing B747-200 aircraft, a block fuel savings of 0.4 percent was projected for the 770 km flight and 0.1 percent for the longer flights. The benefit in reduced nacelle weight and improved internal performance is accounted for along with the increased external nacelle drag on block fuel savings. The effect of the increased external nacelle drag has a greater impact on the long-range flights than on the short-range flights. Thus, a smaller savings is shown for the longer flights.

The estimated annual fuel savings per aircraft for the above block fuel savings are also shown in this Table.

Table XVIII. CF6 Engine with Short Core Engine Nozzle - Fuel Savings Per Aircraft for Internal Thrust Coefficient Improvement Only.

(Minimum Fuel Analysis, Cruise Δsfc = -0.9%)

Aircraft (Engine)	Range		Block Fuel Savings/AC		Annual Fuel Savings/Aircraft	
	km	miles	kg	%	l/AC/Yr	Gal/AC/Yr
DC-10-30 (CF6-50)	805	500	-58	-0.5	145,900	38,547
	2735	1700	-211	-0.8	258,500	68,296
	6275	3900	-599	-1.0	526,900	139,209
B-747-200 (CF6-50)	770	480	-37	-0.4	109,900	29,036
	3460	2150	-49	-0.1	42,400	11,202
	6195	3850	-98	-0.1	49,900	13,184

The economic assessment for the medium fuel price of 14.5¢/l (55¢/gal) for the DC-10-30 and 11.89¢/l (45¢/gal) for the B747-200 is summarized in Table XIX. for a 0.9 percent sfc reduction.

Table XIX. CF6 Engine with Short Core Exhaust Nozzle - Economic Assessment of Payback Period and Return on Investment for New Buy and Internal Thrust Coefficient Improvement Only.

(Medium Range, Medium Fuel Price, Minimum Fuel Analysis, Cruise $\Delta sfc = -0.9\%$)

Aircraft (Engine)	Payback Period (Years)	ROI (%)	Fuel Price ¢/l	Fuel Price (¢/gal)
DC-10-30 (CF6-50)	0.02	4106	14.53	(55) International
B747-200 (CF6-50)	13.1	2	11.89	(45) Domestic

11.0 CONCLUDING REMARKS

As part of the NASA-Sponsored Engine Component Improvement (ECI) Program, seven performance improvement concepts which reduce fuel consumption of CF6 engines were developed and ground tested. Table XX shows the cruise sfc improvement based on the ground test results for each concept as well as the applicable engines and gives the actual or potential service introduction year. In addition the utilization of the concept is described. As can be seen from this table, four concepts (improved fan, new front mount, HP turbine roundness and short core exhaust nozzle) have already been introduced to airline service. Three concepts (improved fan, new front mount and short core nozzle, were directly applied whereas only parts of the HP turbine roundness concept were introduced to new production or retrofit. The remaining three concepts (single shank HP turbine, HPT active clearance control and LPT active clearance control) may be introduced at a later date depending on market conditions and other factors. The total estimated fuel savings for the engine improvements amount to 7½ to 10½ billion liters (2 to 2 3/4 billion gallons).

Because of the increase in the cost of fuel by over 100 percent since the conduction of the feasibility analysis (Reference 1) in 1978, the payback and return on investment (ROI) of the concepts are even more favorable now.

Table XX. Performance Improvement Concepts - NASA ECI Program.

CONCEPT	% ΔSFC	APPLICABLE ENGINE	ACTUAL OR POTENTIAL SERVICE INTRODUCTION	CONCEPT UTILIZATION
IMPROVED FAN (Ref. 2)	-1.8	CF6-6K CF6-50 CF6-80	1981 1980 1982	DIRECT " "
NEW FRONT MOUNT (Ref. 3)	-0.1	CF6-50 CF6-80	1980 1982	DIRECT "
SINGLE SHANK HP TURBINE (Ref. 4)	-1.3	CF6-6	TBD	DIRECT
HP TURBINE ROUNDNESS (Ref. 5)	-0.5	CF6-50 LM5000	1981 TBD	PARTIAL "
HPT ACTIVE CLEARANCE CONTROL (Ref. 6)	-0.7	CF6-50 CF6-80 LM5000	TBD TBD TBD	DERIVATIVE " "
LPT ACTIVE CLEARANCE CONTROL (Ref. 7)	-0.3	CF6-50	TBD	DERIVATIVE
SHORT CORE EXHAUST NOZZLE (REF. 8)	-0.9	CF6-50	1980	DIRECT

1) TBD - To Be Determined

ORIGINAL PAGE IS
OF POOR QUALITY

APPENDIX A - REFERENCES

1. Fasching, W.A., "CF6 Jet Engine Performance Improvement Program, Task I - Feasibility Analysis," NASA CR-159450, March 1979.

2. Fasching, W.A., "CF6 Jet Engine Performance Improvement - New Fan," NASA CR-159699, May 1980.

3. Fasching, W.A., "CF6 Jet Engine Performance Improvement Program - New Front Mount," NASA CR-159639, December 1979.

4. Fasching, W.A., "CF6 Jet Engine Performance Improvement Program - High Pressure Turbine Aerodynamic Performance Improvement," NASA CR-159832, July 1980.

5. Howard, W.D.; Fasching, W.A., "CF6 Jet Engine Performance Improvement Program - High Pressure Turbine Roundness," NASA CR-165555.

6. Rich, S.; Fasching, W.A., "CF6 Jet Engine Performance Improvement Program - High Pressure Turbine Active Clearance Control," NASA CR-165556.

7. Beck, B.; Fasching, W.A., "CF6 Jet Engine Performance Improvement Program - Low Pressure Turbine Active Clearance Control," NASA CR-165557.

8. Fasching, W.A., "CF6 Jet Engine Performance Improvement Program - Short Core Exhaust Nozzle," NASA CR-159564, September 1979.

9. Albright, A. J., Lennard, D. J., and Ziemianski, J. A., "NASA/GE Engine Component Improvement Program," AIAA/SAE 14th Joint Propulsion Conference, 78-929, July 25-27, 1978.

10. Antl, Robert J., and McAulay, John E. "Improved Components for Engine Fuel Savings," ASME Aerospace Congress, NASA TM-81577, October 13-16, 1980.

11. Fasching, W. A., and Hrach, F. J., "CF6-50 Short Core Exhaust Nozzle," AIAA/SAE/ASME 16th Joint Propulsion Conference, AIAA 80-1196, June 30-July 2, 1980.

12. Lennard, D. J., "CF6 Performance Improvement," CTOL Transport Technology - 1978, NASA CP-2036, February 28 - March 3, 1978.

13. Lennard, D. J., and Fasching, W. A., "Performance Improvement Features of General Electric Turbofan Engines," ASME Gas Turbine Conference, April, 1982.

14. McAulay, J. E., "Engine Component Improvement Program - Performance Improvement," AIAA 18th Aerospace Sciences Meeting, NASA TM-79304, January 14-16, 1980.

APPENDIX A - REFERENCES
(continued)

15. McDonel, J. D., "Reduced Fuel Consumption Derivatives of CF6-50 High Bypass Turbofan Engines for the 1980's, AIAA/SAE 15th Joint Propulsion Conference, 1232, June 18-20, 1979.

16. Nored, D. L., "Fuel Conservative Aircraft Engine Technology," Eleventh Congress of the International Council of Aeronautical Sciences, NASA TM-78962, September 10-16, 1978.

17. Nored, D. L., Dugan, J. F., Saunders, N. T., and Ziemianski, J. A., "Aircraft Energy Efficiency (ACEE) Status Report," Aeropropulsion 1979, NASA CP-2092, May 15-16, 1979.

18. Patt, R. F., and Reemsnyder, D. C., "CF6 Fan Performance Improvement," ASME Gas Turbine Conference, ASME 80-GT-178, March 10-13, 1980.

19. Sidenstick, J. E., and Antl, R. J., "CF6 High-Pressure Turbine Fuel Saving Improvements," AIRMEC 1980, April 8-10, 1980.

APPENDIX B

NOMENCLATURE

AC	Aircraft
ACC	Active Clearance Control
AGEE	Aircraft Engine Efficiency
CRF	Compressor Rear Frame
ECI	Engine Component Improvement
EGT	Exit Gas Temperature
FAA	Federal Aviation Administration
HPC	High Pressure Compressor
HPT	High Pressure Turbine
LPT	Low Pressure Turbine
ROI	Return on Investment
SFC	Specific Fuel Consumption, $\frac{kg}{hr\ N}$ $\left(\frac{lbm}{hr\ \ lbf}\right)$
SLS	Sea Level Static
TMF	Turbine Mid Frame
TRF	Turbine Rear Frame

C-2