General Disclaimer

One or more of the Following Statements may affect this Document

- This document has been reproduced from the best copy furnished by the organizational source. It is being released in the interest of making available as much information as possible.

- This document may contain data, which exceeds the sheet parameters. It was furnished in this condition by the organizational source and is the best copy available.

- This document may contain tone-on-tone or color graphs, charts and/or pictures, which have been reproduced in black and white.

- This document is paginated as submitted by the original source.

- Portions of this document are not fully legible due to the historical nature of some of the material. However, it is the best reproduction available from the original submission.

Produced by the NASA Center for Aerospace Information (CASI)

ISSN 0365-5237

Acta
OTO-LARYNGOLOGICA
SUPPLEMENT 392

A Heuristic Mathematical Model for the Dynamics of Sensory Conflict and Motion Sickness

BY

CHARLES M. OMAN

(NASA-CR-169766) A HEURISTIC MATHEMATICAL MODEL FOR THE DYNAMICS OF SENSORY CONFLICT AND MOTION SICKNESS (Massachusetts Inst. of Tech.) 48 p HC A03/MF A01 CSCL 06S
N83-17057
Unclas
G3/52 41590

See pp 41 for applicable Grant #s

DISTRIBUTED BY
THE ALMQVIST & WIKSELL PERIODICAL COMPANY
STOCKHOLM, SWEDEN

JAN 1983
RECEIVED
NASA STI FACILITY
ACCESS DEPT.

ACTA OTO-LARYNGOLOGICA

SUPPLEMENT 392

A Heuristic Mathematical Model for the Dynamics of Sensory Conflict and Motion Sickness

BY

CHARLES M. OMAN

Man Vehicle Laboratory, Department of Aeronautics and Astronautics,
Massachusetts Institute of Technology, Cambridge, Massachusetts, 02139, USA

CAMBRIDGE, MASS., 1982

CONTENTS

Abstract 4

1. Introduction 5

2. Background 7
- 2.1 The Models of von Holst and Held 7
- 2.2 Reason's "Neural Mismatch" model for motion sickness . 9
- 2.3 Shortcomings of current theory 10

3. Spatial orientation estimation and control of body movement . . 12
- 3.1 State space representation 12
- 3.2 A model for movement control 14
- 3.3 Discussion of movement control model 18

4. Sensory conflict and production of symptoms 23
- 4.1 Conflict sensitivity 23
- 4.2 Time course of symptoms 24
- 4.3 Preliminary model for symptom dynamics 27
- 4.4 Some further model implications 31

5. Discussion and conclusions 33

Appendix I 39

Acknowledgements 41

References 42

*1 -823844

Abstract

The etiology of motion sickness is now usually explained in terms of a qualitatively formulated "sensory conflict" hypothesis. By consideration of the information processing task faced by the central nervous system in estimating body spatial orientation and in controlling active body movement using an "internal model" referenced control strategy, a mathematical model for sensory conflict generation is developed. The model incorporates and extends models proposed by von Holst, Held, and Reason, and is congruent with multisensory models for spatial orientation developed by Young and coworkers. The model postulates a major dynamic functional role for sensory conflict signals in movement control, as well as in sensory-motor adaptation. It accounts for the role of active movement in creating motion sickness symptoms in some experimental circumstances, and in alleviating them in others. The relationship between motion sickness produced by "sensory rearrangement" and that resulting from external motion disturbances is explicitly defined. A nonlinear conflict averaging model is proposed which describes dynamic aspects of experimentally observed subjective discomfort sensation, and suggests resulting behaviours. The model admits several possibilities for adaptive mechanisms which do not involve internal model updating. Further systematic efforts to experimentally refine and validate the model are indicated.

Keywords: vestibular, motion sickness, movement control, autonomic nervous system, mathematical models, biocybernetics

1. Introduction

Almost everyone has suffered from motion sickness on occasion when travelling as a passenger in an auto, ship, or aircraft. Motion sickness has a significant incidence in military and space operations, and is common in otologic disease. A century ago, Irwin (1881) noted that vestibular and visual sensory cues can play an important role in producing the disorder. However, despite the ubiquity of motion sickness in modern society, and extensive research efforts (reviewed by Tyler and Bard, 1949; Chinn and Smith, 1955; Money, 1970; Reason and Brand, 1975; and Graybiel, 1975), the physiology underlying the syndrome has not yet been particularly well defined. As a consequence, the etiology of motion sickness is still explained primarily in psychophysical terms.

Claremont (1931) observed that motion sickness symptoms result whenever visual and vestibular sensory cues deviate from normal patterns established in everyday life. He was the first to suggest that the etiological role played by sensory conflict was comprehensive,[1] although he did not speculate on the physiological mechanisms involved. The basic conflict notion has become known as the "sensory conflict" hypothesis, and has since been refined and extended by numerous authors, including Lansberg (1960), Steele (1963, 1968), Guedry (1965a, 1968, 1978), Gillingham (1966), and Melvill Jones (1974). Reason (1969, 1977, 1978) has reviewed the known etiological factors and proposed a formal conceptual model for sensory conflict generation. Reason's model is now generally regarded as one of the most comprehensive available, particularly because it draws on the more physiological "Reafference Principle" of von Holst (1954) and the models and experiments of Held and coworkers describing adaptation to "sensory rearrangement" (Held, 1961, Held et al., 1961, 1963; Hein and Held, 1962).

In recent years there has been a resurgence of interest in the study of the vestibular and visual mechanisms responsible for spatial orientation (reviewed by Goldberg and Fernandez, 1975; Dichgans and Brandt, 1978), and in the development of quantitative mathematical models for both the end-organs themselves and the central processing associated with orientation perception and compensatory eye movements (reviewed by Henn et al., 1980). Young (1970) proposed that the central nervous system (CNS) may function in a manner analogous to some advanced flight control systems by blending information furnished by several sensory modalities together into an optimal "estimate" of spatial orientation, taking into account knowledge of body and sense organ dynamics, and inherent "noise" characteristics. Baron and Kleinman (1968) and Kleinman et al. (1970) had shown that the mathematics of optimal control engineering could be employed to model the closed loop behaviour of a human operator performing a manual control task. Adopting Young's suggestion, Curry et al. (1976) extended Kleinman's optimal control approach by including vestibular models in the analysis of effects of motion cues in flight simulator manual control. In a separate study, Borah et al. (1978) demonstrated that a linearized model for visual/vestibular interaction based on an optimal estimation technique (Kalman and Bucy,

[1] Irwin (1881) had noted that "discord between the immediate or true visual impressions and a certain visual habit" may produce "visual vertigo" in seasickness. But he argued that the primary cause of seasickness is "irritative hyperaemia of the semicircular canals", coupled with "motion of the viscera in the abdomen".

1961) produced results consonant with a variety of experimental data.

In his 1970 paper, Young noted that cue conflict resolution appears to play an important role in determining the interaction between visual and vestibular motion cues apparent in experimental data. He proposed a preliminary nonlinear model, which was later formalized and evaluated by Zacharias (1977). Borah et al. (1978) suggested a nonlinear "cue conflict" modification of their linear "optimal estimation" model. However, these models were not formulated to specifically address motion sickness or sensory-motor adaptation questions. Also, the sensory conflict concept was not represented in these models in the same sense that Reason (1978) has used the term.

The objective of the present effort is to develop a mathematical model for conflict generation in motion sickness which effectively reconciles the more qualitative Neural Mismatch model of Reason and the associated concepts of von Holst and Held with the control engineering viewpoint defined by Young and coworkers. The paper also attempts to address a second, historically somewhat neglected question: What is the dynamic relationship between the time course of symptoms and the putative "sensory conflict" stimulus? The resulting model described here in detail, has been presented earlier in preliminary form (Oman, 1978; Oman and Young, 1979). The development of a mathematical representation of the conflict theory for motion sickness may lay some useful groundwork permitting a fundamentally quantitative, systems engineering approach to the motion sickness problem. A modelling oriented systems approach has also been advocated by Riedel (1980).

This monograph is organized into five sections. Themes from the writings of von Holst, Held, and Reason are fundamental to the model concept. The next section, therefore, provides a brief review. The following two sections develop an explicit analytical formulation for the sensory conflict notion, a framework for viewing sensory-motor function and adaptation in the context of body movement control, and a preliminary model for the dynamics of subjective discomfort. A final section reviews the overall model structure and summarizes some of the major conclusions reached. A working knowledge of linear differential equations and elementary concepts of vector mathematics and linear algebra is assumed. However, familiarity with modern control theory is not required.

2. Background

2.1 The Models of von Holst and Held

Von Holst and Mittelstaedt (1950) asked how it is that the central nervous system (CNS) is apparently able to distinguish changes in visual input resulting from commanded body movements from those associated with movement of the entire visual environment. They noted that sensory information ("afference") intrinsically originates from two different sources: muscular activity (producing "re-afference") and external factors independent of self-movement (producing "ex-afference"). As shown schematically in Fig. 1, von Holst (1954) proposed that motor outflow ("efference")

> "leaves an 'image' of itself somewhere in the CNS, to which the re-afference of this movement compares as the negative of a photograph compares to the print; so that, when superimposed, the image disappears. A motor impulse, a "command" from a higher centre causes a specific activation in a lower centre, which ... (gives) rise to a specific efference to the effector (i.e. a muscle, a joint, or the whole organism). This central stimulus ... the "image" of the efference, may be called "efference copy". The effector, activated by the efference, produces a re-afference which returns to the lower centre, nullifying the efference copy by superposition."

Von Holst's papers[2] inspired numerous experiments, as well as further theoretical elaboration by physiologists concerned with motor control and perception (reviewed by Evarts (1971) and Teuber (1960)). MacKay (1973) objected to von Holst's cancellation notion on the grounds that what one "sees" cannot be just determined by visual input as stabilized by subtraction of an appropriate signal, since for perfect stability, the efference copy generating element would have to know the oculomotor transfer function to better than a tenth of a percent, which seems unlikely. Instead, McKay argued that visual perception was determined by an "internal" representation "of the visual world, and that incoming visual information was evaluated "in the light of what the motor system is about", and used to correct the internal visual representation. The internal "map" of the visual world is normally assumed correct, until sufficient new evidence is received to the contrary.

A central issue in neurobiology is the question of how a fully developed sensory motor system which normally receives correlated sensory input from several sensory modalities adapts to a change in sensory information produced by environmental variation or sensory/motor pathology. As shown by Stratton (1897), Kohler (1965) and others, when human subjects wear optics which invert or reverse their vision, spatial orientation is severely impaired, the "seen" world moves during head movements, and motion sickness is commonly reported. However, after several days (to weeks) of exposure, subjective visual normalcy and coordinated movement are gradually restored. Held and co-workers (Held et al., 1961–1963; Hein and Held, 1962) demonstrated the importance of active movement by the subject in the adaptation process. Held (1961) proposed a modification of von Holst's scheme to account for his findings. He implicitly recognized that the postulated "efference" and "efference copy" signals are intrisicially of different dimensions. The former is a set of motor command signals and the latter an ensemble matched to the sensory input. Von Holst had not addressed in any detail the question of how the CNS generated the appropriate efference copy "image" of the efferent signal, properly matched in a spatio-temporal sense with the anticipated re-afferent input. Held proposed a hypothetical structural ele-

[2] Von Holst and Mittelstaedt termed this basic concept the "Reafference Principle". Somewhat similar hypotheses were proposed by von Uexkull (1926) and Sperry (1950), although von Holst's contribution has perhaps become more widely known.

ORIGINAL PAGE IS OF POOR QUALITY

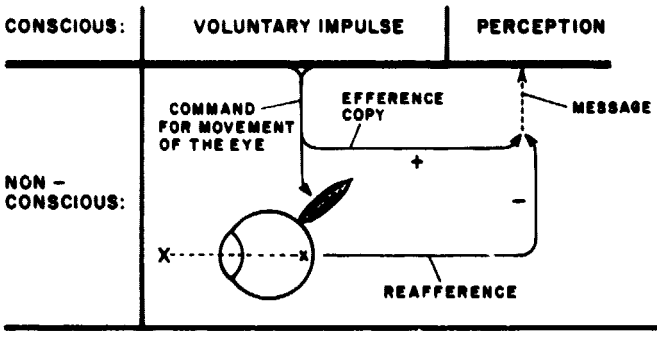

Fig. 1. The efference copy/reafference mechanism. After: von Holst (1957).

ment shown in Fig. 2, called "Correlation Storage". He wrote that:

Instead of assuming a summation between monitored efferent and re-afferent signals, we assume that the re-afferent signal is compared (in the Comparator) with a signal selected from the Correlation Storage by the monitored efferent signal. The Correlation Storage acts as a kind of memory which retains traces of previous combinations of concurrent efferent and re-afferent signals. The currently monitored efferent signal is presumed to select the trace combination containing the identical efferent part, and to activate the re-afferent trace combined with it. The resulting revived re-afferent signal is sent to the Comparator for comparison witht the current re-afferent signal. The outcome of this comparison determines further performance.

The term "sensory rearrangement" was coined by Held to describe experimental situations in which the reafferent stimulus to one or more sense organs is systematically distorted.

Evidence for progressive adaptation to rearrangement (of sensory cues) implies that the selection from storage by the currently monitored efferent signal must be weighted by recency of trace combinations when alternatives are available. Thus, for example, if the conditions that make for typical combinations of signals are systematically changed, as they are by rearrangement, then new combinations will be stored.

Whether active movement by the subject was a necessary, or merely sufficient condition for adaptation remains the subject of some debate (e.g. Weinstein et al., 1964; Gyr et al., 1979). Nonetheless, Held's experiments attracted considerable interest. Guedry (1965 a) noted that human subjects living in the slowly rotating room at Pensacola experienced a vestibular form of sensory rearrangement quite analogous to the visual rearrangements employed by Held, since systematic alteration of semicircular canal sensory input resulted from movements of the head. Motion sickness in the rotating room diminished as a stimulus specific form of habituation was acquired.

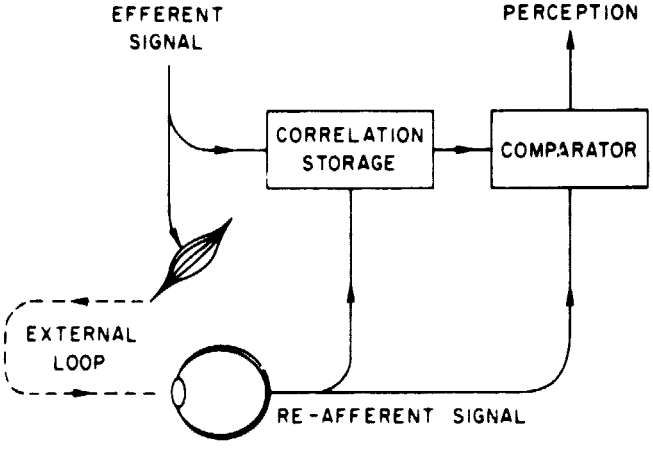

Fig. 2. The "Correlation Storage" model of Held (1961) with permission from the Journal of Nervous and Mental Disease 132: 30. Copyright Williams and Wilkins Co, Baltimore.

ORIGINAL PAGE IS
OF POOR QUALITY

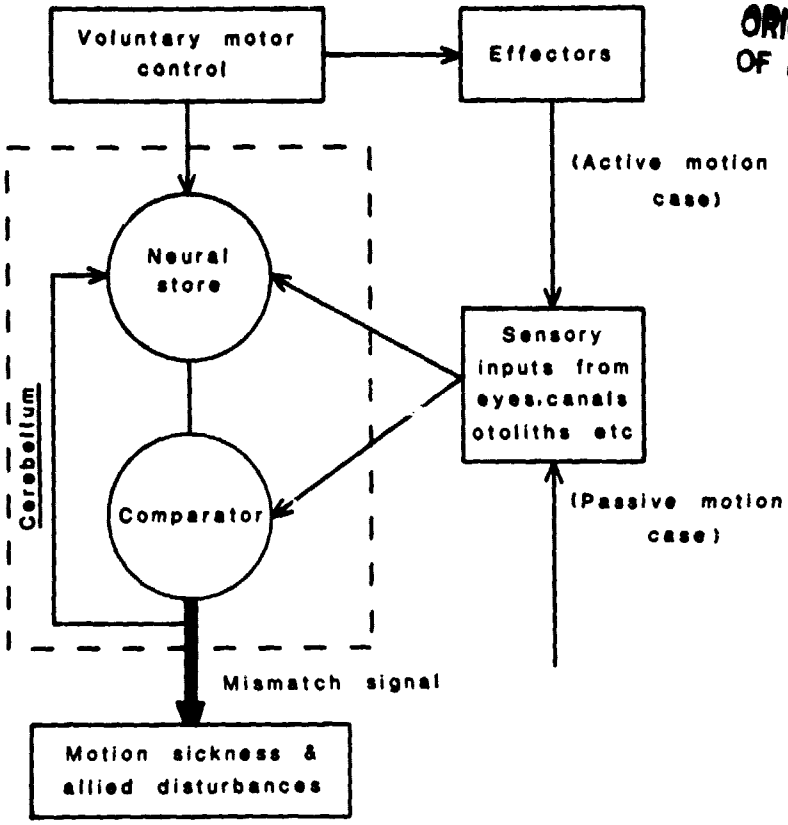

Fig. 3. Basic structural components of Reason's (1978) revised "Neural Mismatch" model.

2.2 Reason's "Neural Mismatch" Model for Motion Sickness

Reason (1969, 1977, 1978) proposed that Held's Correlation Storage concept could form the basis of a formal psychophysical model for conflict generation and adaptation in motion sickness. In effect, he extended Claremont's hypothesis (that sensory conflict played a comprehensive role in motion sickness etiology) by defining the output of Held's "Comparator" to be a putative internal "neural mismatch" signal which triggered the production of symptoms. Reason (1978) reviewed the known forms of motion sickness, and argued that

"all situations which provoke motion sickness are characterized by a condition of sensory rearrangement in which the motion signals transmitted by the eyes, the vestibular system, and the nonvestibular proprioceptors are at variance with one another, and hence with what is expected on the basis of previous transactions with the spatial environment."

Reason noted that most earlier statements of the conflict theory had defined sensory conflict as an incompatibility implicitly existing simultaneously *between* normally functionally correlated sensory inputs (e.g. visual-vestibular; canal-otolith conflicts). He emphasized that

"the nauseogenic conflict is between the present sensory information and that retained from the immediate past, or what Held called "exposure history". That the conflict existing within the present pattern of sensory inputs is by itself insufficient to cause motion sickness is evident from the ... observation that continued interaction with the nauseogenic stimulus results in the eventual disappearance of symptoms, even though the incongruity between the various sources of spatial information remains. It is this crucial temporal comparison between present and past patterns of spatial stimulation that provides the necessary explanatory link between the sensory rearrangement notion and protective adaptation."

Following Held, Reason (1978) postulated two hypothetical structural components (see Fig. 3): The first was a CNS neural memory

unit ("Neural Store") that retains the essential characteristics of previously encountered sensory environments by storing previously experienced efferent/reafferent "trace pairs". The second was a comparator unit which subtracts reafferent information selected from the neural store from information currently being signalled by the spatial senses. During an active body movement, efference is transmitted to the Neural Store where a rapid search is made for the reafferent trace usually associated with the efferent command. The selected trace is sent to the comparator. On initial exposure to rearranged sensory conditions, the reafferent traces in the neural store—"topped off with traces of the previously typical environment—are markedly different from the incoming sensory inputs". The discrepancy is detected by the comparator unit, which sends a mismatch signal along reflex pathways responsible for the production of motion sickness symptoms. The severity of symptoms is assumed proportional to the neural mismatch in any one sensory channel, and the number of discrepant channels, and inversely proportional to the degree of "consolidation": the number of times the subject has recently been exposed to the particular efferent/reafferent trace combination. With continued exposure to the rearranged environment, the contents of the Neural Store are updated and consolidated. The Neural Store is iteratively searched until there is a satisfactory match between the current afferent signal and that retrieved from the Neural Store. Eventually adaptation is complete and no mismatch is found. When the adapted individual is returned to his original environment, a readaptation process occurs, although over a shorter timescale than adaptation to a novel environment, because relatively highly consolidated traces from the original environment remain in the Neural Store. To account for gradual adaptation to passive movement, Reason modified Held's basic scheme by postulating that storage, retrieval, and consolidation of afferent traces can take place in the Neural Store even in the absence of an appropriate efferent trace "label", albeit perhaps more slowly than during active movement.

2.3 Shortcomings of Current Theory

Reason's neural mismatch model was a significant advance in that it provided a conceptual framework linking what otherwise might appear etiologically different forms of motion sickness and because it emphasized the relationship between previous research on adaptation to nauseogenic stimuli and to various forms of sensory rearrangement.

Although Reason's model has been widely employed to describe motion sickness, the conflict hypothesis cannot yet be regarded as an established theory. A number of objections and drawbacks can be identified. For example, Guedry (1968) has observed that there appear to be "several forms of vestibular stimulation that produce motion sickness without obvious intralabyrinthine conflict or intermodality conflict". It is not clear that the "sensory rearrangement" notion can be usefully employed to describe certain potent nauseogenic stimuli, such as passive vertical linear acceleration of a subject at low frequency in the dark. Also, while Held's Correlation Storage concept readily accounts for stimulus specific adaptation, additional hypotheses seem to be needed to account for the transfer of generalized adaptation from one nauseogenic situation to another observed by Graybiel and Knepton (1968) and Graybiel et al. (1968). A third drawback frequently mentioned (e.g. Parker and Money, 1978) is the limited practical value of the conflict model in its present form. It is currently impossible to predict exactly who will become sick in a given situation, and how fast the afflicted will adapt. Also, there is the question of the time course of symptoms. The existing model describes conflict generation and adaptation, but lacks elements which characterize how the various symptoms wax and wane in response to conflict.

Other objections frequently voiced to the conflict hypothesis are that the theory does not really "explain" why it is that individuals who lack vestibular function cannot be made motion sick (James, 1882; Graybiel, 1965), or why the nervous system should go to such elaborate lengths to compute sensory conflict. Electrophysiological evidence for the existence of conflict neurons as implied by the theory is presently lacking. Von Holst's original explanation that a cancelling signal is necessary in order to assure stability of visual perception fails to meet the objections of MacKay, discussed earlier. In his model, Reason notes only that the conflict signal "may initiate further motor activity", and "can be transmitted to a higher centre, where it can give rise to an illusory perception". Why it is that sensory conflict should trigger emesis remains the subject of considerable speculation. The explanation suggested by Claremont (1931) and recently reconsidered by Triesman (1977) was that conflict mechanisms act as an alarm signal to trigger vomiting, thus conferring protection against ingested toxins. However, many find such an evolutionary explanation unconvincing.

Given these deficiencies, it was deemed appropriate to reexamine the conflict hypothesis for motion sickness, and attempt a quantitative restatement with modifications aimed at meeting the objections described above, and also to attempt to bring the theory into some congruence with existing models of spatial orientation perception, such as those formulated by Young and coworkers. One obstacle to such a restatement is that the Correlation Storage/Neural Store concept does not lend itself to a concise analytical formulation. In the Held and Reason models, the nature of the "neural trace" was only intuitively defined. How should a "trace" be represented analytically? If it is the neural memory of the time history of a previously experienced efferent or afferent signal, must it have a beginning and an end? If so, what determines the duration of this epoch? Does this imply that the processing of sensory and motor signals is somehow temporally discontinuous? Are there more tractable, but functionally equivalent ways of representing the Neural Store than as a dictionary containing sequences of matched motor command and reafference time histories?

3. Spatial Orientation Estimation and Control of Body Movement

In seeking a better understanding of motion sickness etiology, several pieces of circumstantial evidence may cause one to reflect on the information processing task faced by the CNS in controlling movement: Brainstem and cerebellar anatomical structures which have been implicated in motion sickness are also known to play important functional roles in movement control. Also, on a more phenomenological level, motion sickness is common among passengers of moving vehicles, but drivers and pilots who command these vehicles seem virtually immune. When a passenger is afflicted, taking control of the vehicle often produces a dramatic cure. An analysis of the neural control of movement may provide some insight concerning the etiology of motion sickness. The relevance of movement control to motion sickness has been emphasized by Melvill Jones (1974).

3.1 State Space Representation

When one attempts to analytically represent the movement control problem, the complex, multi-input, multi-output nature of the physiological system involved seems a formidable obstacle to a comprehensive analysis. A large number of detailed, individual dynamic models for neuromuscular and sensory system elements are clearly required. If the control problem is approached using the mathematics of classical servo-analysis, its more general aspects are easily obfuscated. Control engineers who regularly deal with complex multi-input/output systems have often found it useful to use matrix mathematics to represent the system being modelled in a much more compact shorthand, employing "state variable" notation (reviewed by McFarland, 1971). Using this approach, all the individual differential equations characterizing, in this case, the behaviour of the body and its neuromuscular and sensory systems in response to commands from the CNS and external disturbances are linearized, and converted so a set of n first order differential equations in n "state variables" and their first derivatives. To help fix ideas, an example of how this may be accomplished for a simple case is shown in Appendix 1. The state variables are those quantities (e.g. joint angle, semicircular canal cupula and otolithic membrane displacement and higher derivatives) whose initial conditions must be specified when solving (from $t=0$) the individual differential equations for subsequent time response, since their initial conditions incorporate the past history of the system; its physical memory. The set of n state variables is conceptualized as an n dimensional column vector, $\mathbf{x}$, henceforth referred to as the "actual state" of the system. The set of first order differential equations, representing the entire physical system under CNS control, and the sensory organs providing feedback may then be cast into two *matrix* equations in $\mathbf{x}$:

$$\dot{\mathbf{x}} = A\mathbf{x} + B\mathbf{u} \tag{1}$$

$$\mathbf{a} = S\mathbf{x} + \mathbf{n}_a \tag{2}$$

Those familiar with classical servo-analysis may conceptualize these equations as shown in Fig. 4 by considering the actual system state, $\mathbf{x}$, to be the output of a "vector integrator", whose input is the sum of two vectors, $A\mathbf{x}$ and $B\mathbf{u}$. As shown in the Appendix 1 example, the (square) matrix A contains body and sense organ model differential equation coefficients describing the natural (mathematically homogeneous), unforced behaviour of these system elements in response to all internal forces normally present, including gravity.

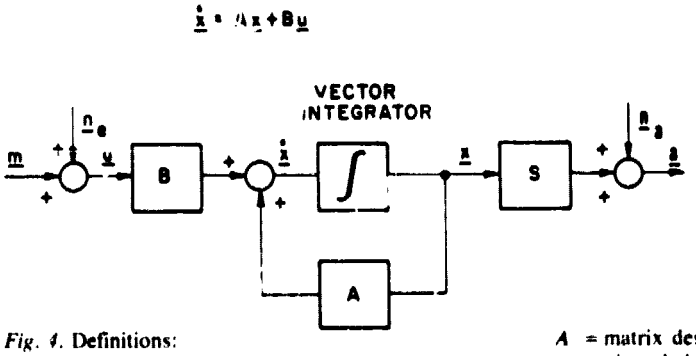

ORIGINAL PAGE IS OF POOR QUALITY

Fig. 4. Definitions:
x = body "actual state" vector
u = forcing vector: = $\mathbf{n}_e + \mathbf{m}$
m = motor outflow vector (from CNS)
a = polysensory afference vector (to CNS)
$\mathbf{n}_e$ = external disturbance "noise" vector
$\mathbf{n}_a$ = sense organ output "noise" vector
A = matrix describing effect of **x** on $\dot{\mathbf{x}}$; unforced behavioural characteristics of body and sense organs
B = matrix describing effect of forcing vector on $\dot{\mathbf{x}}$
S = matrix of sense organ gain factors.
Vector quantities are shown in boldface in the text, and have been underlined for clarity in this and succeeding figures.

The vector *A* **x** expresses how the current value of the actual state **x** influences the time rate of change of **x** itself. Similarly, the matrix *B*, which contains the mass and inertia terms, expresses how the time rate of change of the actual state depends on the forcing terms in the differential equations, which here appear in the column vector **u**. In the present case, the forcing functions derive from both "motor" outflow to muscles originating in the CNS controller and from external disturbances applied to the body, as might result from impacting an obstacle during movement, or from standing on a moving surface. To formalize this distinction, we write that

$$\mathbf{u} = \mathbf{m} + \mathbf{n}_e \tag{3}$$

where **m** is a vector describing the multiple components of the CNS efferent outflow, and $\mathbf{n}_e$ is viewed as externally applied disturbance "noise".

Before discussing Equation 2, it should be pointed out that given a set of initial conditions for the components of **x**, Equation 1 is itself readily solved (by digital computer, as a set of first order difference equations). Given the time histories of the various components of the forcing vector **u**, the time histories of all components of the actual state **x** can be determined. The "trajectory" of the vector **x** in multidimensional "state" space completely describes the behaviour of the physical system, including dynamic events in the sense organs. The utility of the state space approach derives, in part, from the fact that the "state differential equation" (Equation 1) is general enough to describe the behaviour of *any* multiple-input/output linearized dynamic system, forced or unforced, as a function of time. One can exploit this when considering the yet more general problem of movement control of a vehicle by its operator. One needs only to write the additional differential equations describing the dynamics of the vehicle and then appropriately augment the *A* and *B* matrices and the actual state vector. The form of Equation 1, however, is unchanged.

Equation 2, above, postulates that the measurements of system actual state, in this case afference from a variety of sense organs denoted by the column vector **a**, are related to the actual state by a matrix *S*, and are typically corrupted by noise in each afferent sensory modality, represented by the vector $\mathbf{n}_a$. The various components of $\mathbf{n}_a$ are assumed to have zero mean.

The character of the *S* matrix is of great significance in determining the possible strategies for movement control: The *S* matrix describes which components of the system be-

haviour may be "seen" by the model CNS. Were it possible for the brain to observe the physical state of body joint angles, etc., directly, in a noise free fashion, without having to use dynamically "imperfect" sensory organs, neural movement control could be simply accomplished. The model CNS need only subtract its measurements of actual system state from a "desired state" vector, and use this error signal to appropriately drive the muscles. In essence, this describes the classical cybernetic analogy often made in the movement control literature. Of course, the actual situation is really not so simple. The CNS can only measure the physical realities it wants to control through its imperfect sensory organs. Unfortunately, the available sensory modalities do not respond directly in noise free fashion, or uniquely, to all of the various states which the nervous system might wish to control. Consequently, most of the components of the S matrix in Equation 2 are zero, except those associated with sensory organ response gains as is demonstrated in Appendix I. The implication of this is profound. Given only indirect and noisy information about the physical behaviour of the body, which is, of course, also subject to external disturbances, how is the CNS to achieve adequate control? Obviously, it must somehow use *a priori* information to interpret incoming sensory information and *reconstruct* what is really going on in the physical world. But what strategies might be used to accomplish this?

3.2 A Model for Movement Control

Modern control theory suggests an answer. In a series of theoretical appears, Kalman (1960), Kalman and Bucy (1961) and Wonham (1968) considered the problem of control of a system where only incomplete information on system state is available from noisy sensors, and the system being controlled is subjected to external disturbances. They showed that a reasonable strategy (optimal under certain conditions) is to base feedback control commands upon an estimate of the state of the controlled system. This estimate of controlled system state is synthesized by an information processing entity internal to the feedback process referred to in the control literature as an "observer". Fundamentally, the "observer" consists of a dynamic, mathematical model of the system being controlled. Given *a priori* knowledge of the controlled system in the form of an mathematical model, and an accurate set of initial conditions, the observer should be capable of predicting the subsequent behaviour with time of all of the controlled system states, provided the system is not subjected to unmodelled external disturbances. In practice, of course, such a model reference control strategy is inadequate, because disturbances of various kinds are invariably present. Hence, the observer also exploits the availability of the limited set of noisy feedback measurements of actual system state to continuously dynamically *correct* its own estimates of what the controlled system is doing. In order to accomplish this, Kalman showed, the appropriate strategy is to use the internal model in the observer to estimate not only controlled system state, but also to predict the feedback measurements to be expected from moment to moment if the observer's guess regarding actual system state is correct. The difference between *expected* measurements and their actual values is computed, is used to "steer" the observer state estimates towards reality, and also to provide a convenient index of observer internal model prediction error. This application by Kalman, Bucy, and Wonham of observer theory to closed loop control has parallels in the theories of von Holst and Held regarding internal models, Correlation Storage, efference copy and closed loop sensory motor function. Since Equations 1–3 provide a convenient linearized representation for the dynamics of the body and its sensory systems, we will now explore this analogy in more formal detail. An appropriate scheme for continuously estimating body and sense organ state and controlling movement will be de-

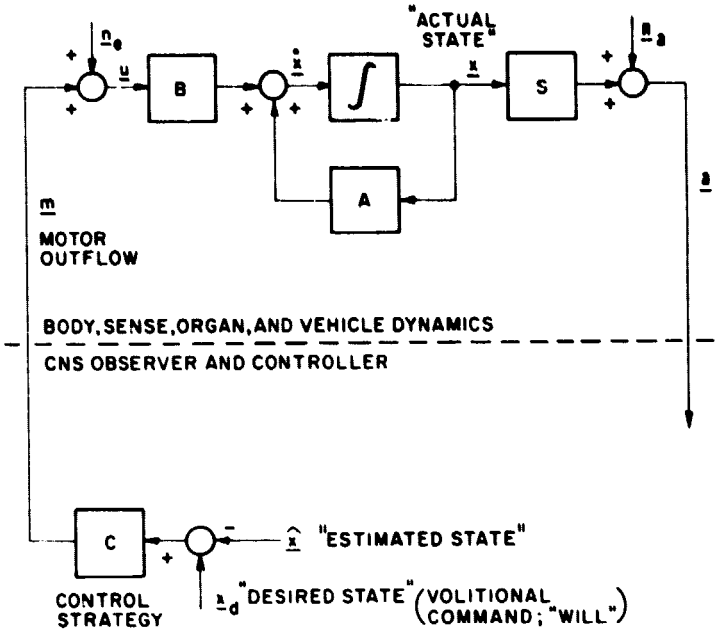

ORIGINAL PAGE IS OF POOR QUALITY

Fig. 5.

scribed, based on the Kalman–Bucy–Wonham results. This scheme will also serve as a general model for the information processing functions performed by the CNS in computing sensory conflict in motion sickness.

As shown in Fig. 5, a vector **m** representing efferent outflow is assumed determined in the CNS by taking the difference between the "willed" state of the body, represented by the vector $\mathbf{x}_d$, here termed the "desired state", and a vector called the "internal estimated state", $\hat{\mathbf{x}}$, ("x hat"). The internal estimated state is the output of the as-yet-to-be-defined "observer". Components of the estimated state are assumed to directly determine perceived orientation. Since it may be presumed that $\hat{\mathbf{x}}$ is usually a good estimate of **x** most of the time, the difference between the desired state and the internal estimated state may serve as the error signal in movement control. Hence, for analytical purposes, **m** is determined by multiplying this movement control error vector by an appropriately chosen control strategy matrix C. Thus:

$$\mathbf{m} = C(\mathbf{x}_d - \hat{\mathbf{x}}) \qquad (4)$$

The critical qustion is: How does the observer derive the estimated state? For purposes of modelling, $\hat{\mathbf{x}}$ is taken to be the output of an *internal* vector integrator, shown in Fig. 6. The CNS is be assumed to know the passive behavioural characteristics of the body and its sensory organs (i.e. the elements of the A matrix), and to employ an estimate of the A matrix, here denoted $\hat{A}$, in estimating the rate of change of the estimated state, $\dot{\hat{\mathbf{x}}}$. Similarly, motor outflow commands **m** are presumably internally available to the CNS. The CNS is assumed to know the effect of motor outflow on system state, and to employ an estimate of B matrix characteristics, $\hat{B}$, in calculating the rate of change of estimated state. Thus, the strategy for reconstructing an open loop estimate of the actual state is simply to employ estimates of the matrices which describe actual system behaviour, as represented by Equation 1.

If the body was not subject to external disturbances, and the internal model employed was correct (i.e. $\hat{A}=A$; $\hat{B}=B$), then the CNS could be expected to achieve acceptable open loop control, even in the absence of any sen-

ORIGINAL PAGE IS
OF POOR QUALITY

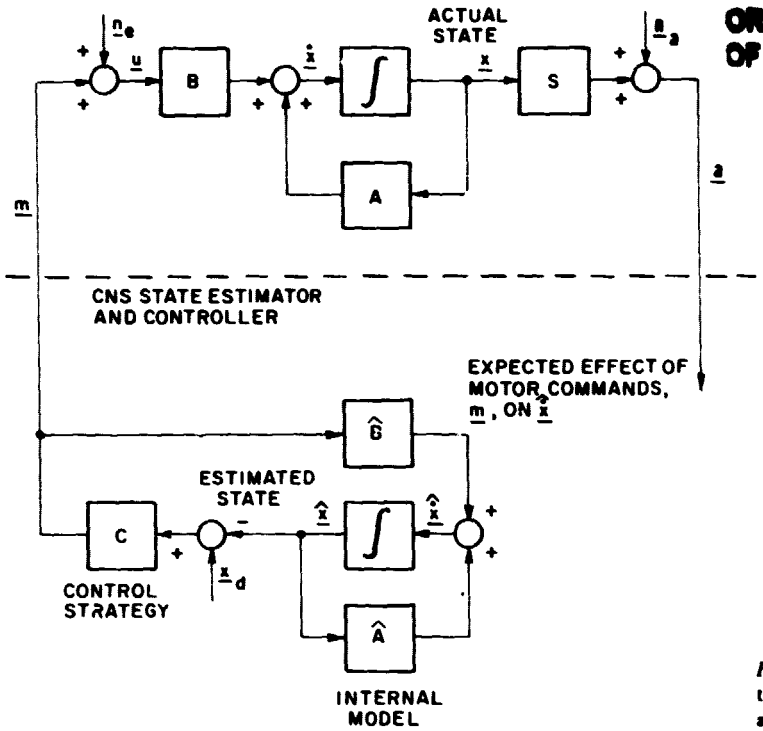

Fig. 6. Preprogrammed motor control in the absence of sensory input **a**.

sory feedback, because it would be able to guess what the body was doing in response to motor commands. Given initial conditions on $\hat{\mathbf{x}}$, and a time history of the desired state $\mathbf{x}_d$, the model for the CNS would generate an appropriate, continuous efferent "engram".

In reality, of course, the body and any vehicle being controlled are exposed to external disturbances ($\mathbf{n}_e$) of an unpredictable nature. An it may be that the CNS employs somewhat simplified dynamic models for the behaviour of the body, so that $\hat{A} \neq A$ or $\hat{B} \neq B$. To achieve control of movement in closed loop fashion, the CNS must have some means an its disposal for detecting the presence of external disturbances or intrinsic errors in internal model predictions and correcting the internal estimated state. The Kalman–Bucy–Wonham results suggest a strategy for accomplishing this is to employ an internal estimate of sensory organ sensitivities represented by the matrix S in Equation 2. These estimates of S are denoted $\hat{S}$, and used to predict, from moment to moment, an expected sensory input $\hat{a}$ given by:

$$\hat{a} = \hat{S}\hat{\mathbf{x}} \tag{5}$$

If $\hat{A} = A$, $\hat{B} = B$, $\hat{S} = S$, and $\mathbf{n}_e = 0$, then the $\hat{\mathbf{a}}$ signal will match the actual sensory afference, on the average, because $\mathbf{n}_a$ has zero mean. The difference between actual sensory input and the expected sensory input, written as a vector **c**:

$$\mathbf{c} = \mathbf{a} - \hat{\mathbf{a}} \tag{6}$$

reflects only afferent noise. On the other hand, when external disturbances $\mathbf{n}_e$ are present, the estimates produced by the observer may diverge from the actual state in a more significant fashion. However, the **c** vector contains useful information about the error between the actual and estimated states in the magnitudes and signs of its various components. Of course, this information is some-

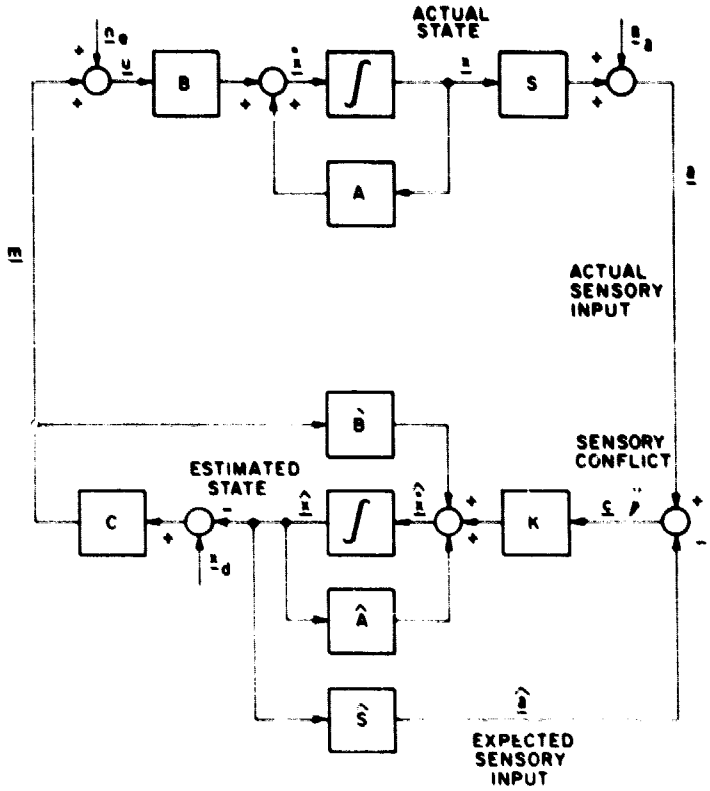

ORIGINAL PAGE IS OF POOR QUALITY

Fig. 7. Non-adaptive movement control.

what masked by the presence of variations in **e** produced by sensory noise $\mathbf{n}_s$. Nonetheless, one can gradually "steer" the rate of change of estimated state, $\dot{\hat{\mathbf{x}}}$, using the vector **e**, toward the actual state, because the sensory noise contribution to **e** has zero mean. One multiplies the **e** vector by a matrix of weighting coefficient $\hat{K}$ chosen so that when $\hat{K}\mathbf{e}$ is added to $\hat{\mathbf{x}}$, the estimated state vector is driven towards the actual state, so that **e** is reduced. Kalman and Bucy (1961) defined an analytical method for optimally choosing $\hat{K}$ such that **e** is statistically minimized when the noise processes are known. The basic approach is to choose the elements of $\hat{K}$ so that the components of **e** which correspond to noisy sensory modalities are lightly weighted. Thus, the basic model for the CNS "observer" is given by:

$$\dot{\hat{\mathbf{x}}} = \hat{A}\hat{\mathbf{x}} + \hat{B}\mathbf{m} + \hat{K}\mathbf{e} \qquad (7)$$

(Readers requiring a more extensive mathematical description of the Kalman–Bucy–Wonham technique are referred to the original papers, and to Kwakernaak and Sivan, 1972). In summary, the function of the CNS observer, then, is to estimate both the state of the controlled system and the sensory input to be expected, and to compute the **e** vector. The $\hat{A}$, $\hat{B}$, and $\hat{S}$ matrices in the observer represent an "internal model" for the dynamic behaviour of the body and its sense organs; the third term in Equation 7 serves to trim out errors which develop in the estimated state. When the body is moved passively, the third term describes how the various afferent motion cues are weighted to determine estimated body state. The $\hat{A}$ and $\hat{S}$ matrices influence the dynamics of this cue blending process. Equations 5–7 are schematically represented in Fig. 7.

3.3 Discussion of Movement Control Model

The notion of a "model within a model" may at first seem convoluted. However, it should be clear that the model for the "observer" state estimator represented by Equation 7 is functionally analogous to the Correlation Storage/Neural Store element in the Held and Reason models. By postulating the existence of an internal CNS dynamic model, though, one avoids the problem of having to define the temporal beginning and end of a sensory or motor neural "trace" implicit in the Held/Reason approach. This is because the information retained by the CNS in the internal model is not the trace *itself*, but rather the information needed to generate it on a continuous basis.

The **c** vector, then, corresponds to a generalized (multi-modality) representation of sensory conflict as defined by Reason, and therefore will be referred to as the "*sensory conflict*" *vector*. Simlarly, the $\hat{\mathbf{a}}$ vector has the properties one would expect of a generalized von Holst "efference copy" signal, including afferent dimensionality.

When $\mathbf{x}_d$ is held constant, so that the control function performed is one of regulation (as in the case considered by von Holst), then changes in motor outflow **m** are directly associated with changes in efference copy $\hat{\mathbf{a}}$. It is easily shown that

$$\mathbf{m} = -C\hat{S}^{-1}\hat{\mathbf{a}} + C\mathbf{x}_d \qquad (8)$$

In Held's and Reason's models, a unique relationship between motor outflow and efference copy was tacitly assumed. Equation 8 demonstrates that this is *not* the case for the general case, where $\mathbf{x}_d$ is also allowed to vary: If the *desired* body orientation is allowed to change, then the appropriate motor outflow depends on where one *wants* the body to go, as well as what one thinks the body is doing at the moment, whereas the efferent copy signal appropriate for cancellation is dependent only upon one's estimate of body/sense organ state, and not directly on desired orientation. This demonstrable lack of a unique relationship between motor outflow and efference copy was neglected by Held and Reason. To the extent that the Correlation Storage elements in their models can be viewed as "dictionaries" of previously experienced trace pairs, location of the appropriate efference copy trace by the comparator element must involve information not only about motor outflow, but also about desired orientation. This distinction may also be useful to physiologists who seek to establish criteria for the experimental identification of efference copy neurons. In this regard, one might note that the vector $\hat{B}\mathbf{m}$ appearing in this model is always directly and uniquely related to motor outflow, and therefore might satisfy the definition proposed by Teuber (1960; following Sperry, 1950) that central neural signals correlated with efferent outflow, which are used to compensate for sensory input changes resulting from active movement, be termed "corollary discharge". However, the $\hat{B}\mathbf{m}$ vector does not cancel the expected sensory signal, so it cannot be viewed as an efference copy signal as well, under the definition employed by von Holst, Held, and Reason.

The present model illustrates that a very important functional role could be played by the conflict vector over the short term in directly acting to stablize the body in the face of unpredicted disturbances from the outside: When a disturbance force is encountered, the sensory afference produced is not cancelled by efference copy, so a change in the state estimated by the internal model is initiated through the K matrix. The estimated state changes until the efference copy cancels the afference produced by the disturbance, indicating that the observer state estimate is once again correct. As this observer state estimate change proceeds, the appropriate corrective motor outflow is generated through the control matrix C. To the extent that the conflict vector affects the estimated state only indirectly, and the internal model matrices are viewed as an internal "map" used to evaluate incoming sensory information, the present for-

mulation meets some of MacKay's objections to the efference copy concept. Nonetheless, it is also appropriate to view the transfer of sensory conflict information through the K matrix and into the internal model integrator as completing what amounts to a "reflex" pathway which acts to initiate corrective motor outflow in certain situations, as when obstructions are unexpectedly encountered. On the other hand, during normal, unobstructed, volitional movements, model motor outflow is associated almost exclusively with internal model predictions. This strategy takes advantage of the best aspects of both feedforward and feedback control. In the field of motor control, there is increasing evidence (reviewed by Evarts et al., 1971; Melvill Jones, 1974) that during many volitional movements, motor outflow is generated in essentially a "preprogrammed" fashion, and that reflex pathways play a functional role particularly when unexpected obstructions are encountered. Experiments on deafferented animals have shown that the higher vertebrate nervous system can indeed achieve a significant degree of motor "control" in an open-loop, internal model referenced mode (Taub et al, 1965; 1975).

A fundamental implication of the present model, then, is that sensory conflict is *always present* in daily life to a degree reflecting at least the presence of sensory noise processes $\mathbf{n}_a$ and the frequency with which external disturbance forces $\mathbf{n}_e$ are encountered. A corollary to this, of course, is that the statistical properties of the conflict vector are a measure of overall control system adequacy and performance. A sudden increase in sensory conflict vector components may mean only that an external disturbance is being encountered. On the other hand, if this increase is *persistent*, it may mean that the behavioural characteristics of the body or its sensory organs have somehow changed so that the internal model employed in state estimation and control is in need of revision. The model predicts that persistent sensory conflict would develop in any situtation where $\hat{A} \neq A$, $\hat{B} \neq B$, or $\hat{S} \neq S$. The latter might serve as a reasonable mathematical definition of the term "sensory rearrangement", as it would describe any situation in which the sensory inflow resulting from motor outflow has been *systematically* changed. Representative situations include the use of vision reversing prism glasses, or the operation of a motionless flight simulator when accustomed to the motions of the actual aircraft. Exposure to weightlessness also fulfills this criterion. In the example shown in Appendix I, the gravity dependent terms in the A matrix would suddenly change. The body would no longer behave in the familiar manner in response to motor outflow, and otolith cues would not fit the familiar pattern. Exposure to a rotating room environment on earth or in space could also be described in this way, although the nature of the changes in the A and B matrices produced are certainly complex and depend on the subject's orientation with respect to the axis of rotation. In all of these cases, the model predicts that orientation and motor control deficits would occur until the characteristics of the system being controlled have been re-identified.

The trigger for the re-identification process is likely equivalent to some form of time domain averaging of conflict components, as rearrangement produces a persistent increase in the absolute value of sensory conflict components. The existence of mechanisms for re-identification of A, B, and S, and appropriate modification of $\hat{A}$, $\hat{B}$, $\hat{S}$, K, and C are shown schematically in Fig. 8. Obviously, the only means available to the CNS to perform this re-identification process is to resort to *active* movement, unless external disturbances $\mathbf{n}_e$ are present, and they are predictable temporally, or the CNS can make assumptions regarding the disturbance statistics. The important role of active movement in the adaptation process is, of course, consistent with the experimental findings of Held.

It is interesting to note that although numerous *ad hoc* identification techniques are available in the engineering literature (reviewed by

ORIGINAL PAGE IS
OF POOR QUALITY

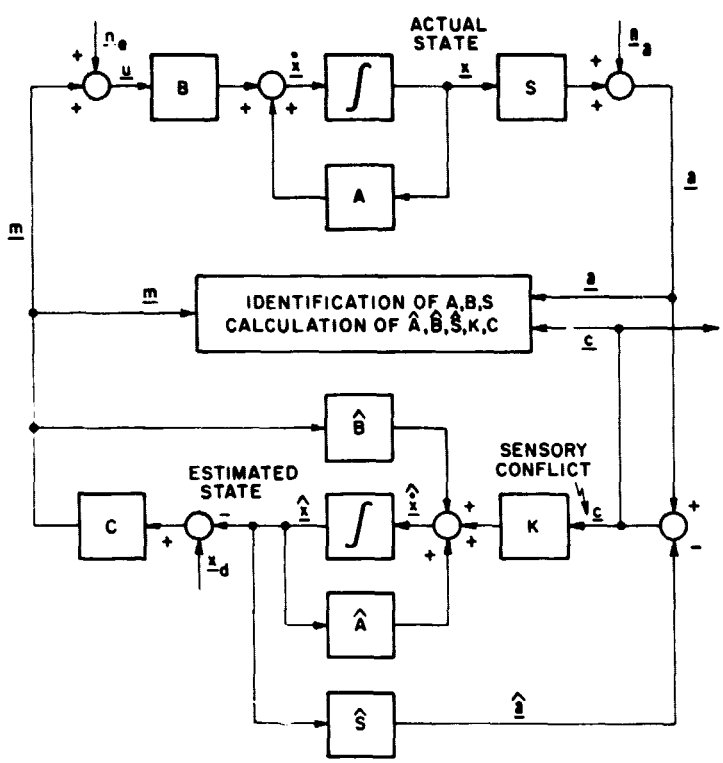

Fig. 8. Adaptive movement control.

Graupe, 1975) which may be considered as candidates for describing the identification process in the present model, no general result has been found which would suggest an optimal strategy for sensory motor adaptation. It is likely that the CNS employs multiple strategies, and it is inevitable that physiolocical and neuroanatomical factors will impose significant constraints on the extent and time course of adaptation. Although the present model provides a framework for describing the level of adaptation attained in terms of altered $\hat{A}$, $\hat{B}$, $\hat{S}$, K and C matrices, the analysis does not consider the physiology in detail, and hence provides no guidance with respect to how quickly adaptive changes can take place, or what the limits of these changes are. However, on the basis of experimental evidence obtained from human subjects adapting to sensory rearrangement, $\hat{A}$, $\hat{B}$, $\hat{S}$, K and C matrix coefficients can be adjusted to mimic adaptive phenomena.

Experimental evidence suggests that the CNS has the ability to retain multiple sets of internal models, and to employ them in the appropriate context. This ability appears robust with respect to those aspects of body and vehicle dynamics which normally undergo frequent alteration. On the other hand, human adaptive mechanisms may be more limited in their ability to accommodate certain types of changes in sensory organ characteristics. The nature and extent of the rearrangement then appear to be important: After some practice, wearers of conventional spectacles rapidly adapt when the spectacles are removed or donned. Adaptation to left-right vision reversal is a slower process, requiring days to weeks. Adaptation to the systematic vestibular changes produced when a subject is in a rotating room on earth appears to require a comparable period of time. There is some evidence that spontaneous loss of adaptation may occur during periods of head immobilization (Graybiel and Knepton, 1972). All subjects usually readapt to the "normal" environment

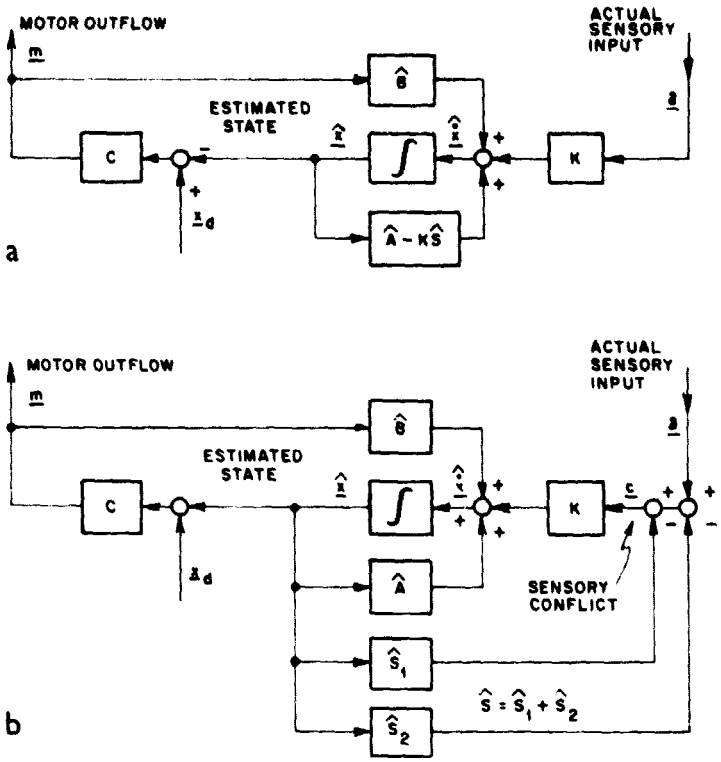

ORIGINAL PAGE IS OF POOR QUALITY

Fig. 9. Equivalent observer/controller. (*a*) without explicit conflict computation. (*b*) without explicit computation of $\hat{\mathbf{a}}$, the efference copy vector.

relatively rapidly, as when leaving the Pensacola Rotating Room, or returning to earth from a period of weightlessness in orbit. Following Reason (1977), one could postulate that the time required for internal model substitution was determined by the "degree of consolidation" of the model matrices: the number of hours, days, or years, the matrices had previously been employed. However, a quantitative model cannot yet be proposed.

If the characteristics of the system being controlled by the CNS were not subject to change, it could be argued that the nervous system need not concern itself with an explicit calculation of sensory conflict. As shown in Fig. 9a, for example, the two parallel feedback loops passing through the $\hat{A}$ and $K\hat{S}$ matrices could be replaced with a mathematically equivalent topology: a single feedback pathway through a single matrix equal to $\hat{A}-K\hat{S}$. Using this approach, sensory information is weighted by a matrix K, and then passes into a "filter" in which the efference copy and conflict vectors do not explicitly appear, but which yields a state estimate identical to the system in Fig. 7. Because of its computational simplicity, this approach is commonly adopted in many engineering applications where the system being controlled is assumed to be not subject to change. However, the existence of conflict related motion sickness symptoms, and their association with sensory-motor adaptation, argues strongly that in CNS control of movement, a conflict calculation is explicitly made, at least in the case of certain sensory modalities. It is instructive to observe, though, that this argument cannot be extended as presumptive evidence for the physical existence of neurons corresponding to the individual components of the efference copy vector $\hat{\mathbf{a}}$. The net efference copy effect represented by the $\hat{\mathbf{a}}$ vector might, in fact, be distributed between several feedback loops acting in parallel, none of which contains a signal which,

by itself, exactly cancels sensory input. (An example is shown in Fig. 9b for the case of two parallel loops through $\hat{S}_1$ and $\hat{S}_2$, where $\hat{S}_1+\hat{S}_2=\hat{S}$.) Hence, the current lack of evidence for the existence of centrifugal signals which exactly cancel incoming sensory information at a single point should not necessarily be accepted as an argument against the postulated neural computation of sensory conflict. The strongest evidence for such a computation lies in the existence of motion sickness itself.

The present movement control model is mathematically congruent with other previously published "optimal control" models (Kleinman et al., 1970; Curry et al. 1976; Borah et al. 1978). This fact indicates that model parameters can be found so as to mimic actual human spatial orientation and movement control behaviour. For example, Borah et al. employed the Kalman–Bucy (1961) optimal estimation technique to model the subjective sensations of a passive observer, and demonstrated that the model can account for many well-known perceptual phenomena in vestibular physiology, such as the gradual development of "circularvection" after a change in the velocity of the visual surround; an additional delay in decay of post-rotational sensation not attributable to semicircular canal dynamics; a gradual pitch up illusion during prolonged or large forward linear acceleration; and a static tilt illusion accompanying circularvection about a horizontal axis. Curry et al. extended the closed loop, optimal control model of Kleinman (1970) to describe the manual control performance of pilots operating flight simulators, and included models for the dynamics of the semicircular canals and otoliths. The extended model was developed based on manual control data from one investigator, and validated on data published by another in predictive fashion. The underlying assumption in these studies was that the human behaves "optimally" in some sense, subject to his inherent psychophysical limitations. One could argue that the model fit of original data was achieved by a semi-empirical procedure in certain cases. Nonetheless, the resulting models have demonstrable predictive value when employed as intended.

The Young, Borah et al., and Curry et al. models differ from the approach desribed here in terms of their treatment of the conflict concept. Young's (1970) proposal for an optimal control model of spatial orientation emphasized the utility of "internal models" for body and sense organ dynamics. However, a "conflict vector" was not explicitly defined. An "expected system state" vector rather than an expected measurement vector was derived. In the Curry and Borah studies, the ability of the models to mimic adaptive changes via alterations in the internal model matrices was not explored, so a steady state version of the Kalman–Bucy filter was employed. A measurement conflict vector was not defined. Borah et al. emphasized the importance of "cue conflict" in a nonlinear extension of their linear model, but instead of calculating measurement conflict using a method analogous to that of Equations 5 and 6, they adopted a different ad-hoc non-linear scheme, originally proposed by Young (1970) and employed by Zacharias (1977). In this approach, a vestibular model is used with incoming visual information to calculate expected vestibular response. "Conflict" is taken as the difference between this and actual vestibular input. By contrast, in the present model, the expected vestibular response component is not derived exclusively from the visual sensory input alone, but rather is calculated using the complete internal state estimate, which is influenced by all sensory inputs, as well as by a priori knowledge of the behaviour of all system components and motor outflow. Conceivably, the Borah model could be modified to employ vestibular conflict as calculated using the more comprehensive approach represented by Equations 5 and 6, and extended to the closed loop case using Equation 7.

4. Sensory Conflict and Production of Symptoms

4.1 Conflict Sensitivity

Given an analytical model for the conflict generation process, one must ponder the nature of the relationship between sensory conflict vector components and the production of motion sickness symptomatology. Which types of sensory conflict do individuals find most provocative and why? A variety of anatomical and physiological evidence is relevant.

Studies of canine susceptibility to swing sickness (Bard et al., 1947; Wang and Chinn, 1956) have shown that the integrity of the cerebellar nodulus and uvula is required for motion sickness. A brain stem "vomiting center" has been identified by Wang et al. (1950, 1952, 1954) which initiates emesis in dogs in response to a variety of stimuli, including passive motion. The integrity of the adjacent "chemoreceptive trigger zone" is also required (Wang and Chinn, 1954; Brizzee and Neal, 1954). Nausea is generally assumed to be the conscious awareness of unusual activity in the vomiting centers, regardless of whether vomiting occurs (Money, 1970). That pallor, cold sweating, salivation, respiration increase, belching, flatulence, and drowsiness usually accompany nausea and vomiting in motion sickness (Graybiel, 1975) suggests that areas in the reticular formation and hypothalamus, some of which are traditionally associated with central autonomic regulatory function, may also be activated. Graybiel (1969) has postulated the existence of a *temporary* ("facultative") functional linkage between vestibular centers concerned with spatial orientation and other neural structures mediating symptomatology.

One might suspect that the physical locus of neurons which mediate sensory conflict may be of importance in determining which types of conflict produce symptoms. That the loss of vestibular function confers immunity to motion sickness, and the observation (Reason, 1969) that the disorder is always associated with changing, rather than static orientation cues, provides circumstantial evidence that conflict in the vestibular modalities plays a major role. The existence of efferent vestibular fibers raises at least a possibility that primary vestibular afferents may form part of the conflict generation pathway. However, the functional role played by vestibular efferents has not yet been established under physiological circumstances during volitional movement (Goldberg and Fernandez, 1980). Vestibular conflict could also be computed more centrally.

The existence of "Cinerama" and "simulator" sickness suggests that visual conflict neurons might also exist, and are coupled to symptom production centers. Alternatively, one could suggest that motion sickness produced by visual stimuli may be mediated by a more indirect mechanism, and that simulator and Cinerama sickness result from conflicts in the vestibular modalities exclusively: Moving visual fields would be expected to change the internal estimated state, $\hat{\mathbf{x}}$, in the present model, with the result that vestibular modality conflict would be generated in the absence of appropriate vestibular stimulation. Such an indirect mechanism would be partially consistent with Graybiel's (1975) classification of vision as a "secondary etiological influence" in motion sickness. On the basis of similar arguments, one might also then expect that very compelling spatial orientation cues delivered by modalities other than the visual and vestibular might be provodative to some degree. In fact, several recent reports are consistent with this notion. Bles (1979) has demonstrated that "Coriolis"-like illusions can be elicited via proprioception alone in subjects who walk on a counterotating turntable. His

subjects then also reported motion sickness symptoms. Also, Schaefer et al. (1981) have observed motion sickness symptoms in at least one subject exposed to apparently rotating acoustic stimuli.

In his model, Reason (1977, 1978) proposed that the severity of motion sickness symptoms is directly proportional to a hypothetical "mismatch signal", which increases as a function of the conflict in any one sensory channel, as well as with the number of sensory channels. One way of generalizing this assertion is to postulate a scalar mathematical parameter, $h(t)$, which is a function of the various time-varying components of the conflict vector $\mathbf{c}$. In specifying this functional dependence, it should be noted that the algebraic sign of sensory conflict does not appear to influence the nature of the symptoms elicited, although it does determine the direction of the reflex and illusory phenomena produced, as the current model predicts. (For example, unadapted subjects find clockwise or counterclockwise body rotation equally nauseogenic when they perform out of plane "Coriolis" head movements.) To specify the functional dependence of $h(t)$ upon $\mathbf{c}$ in a very general way, one can define a symmetric matrix, T, whose coefficients describe an individual subject's sensitivity to conflict signals in and between sensory channels. This matrix is used to define $h(t)$, a scalar quantity, by premultiplication of T by the vector $\mathbf{c}^T$ (i.e. the conflict vector transposed to be a row vector), and by post-multiplication by $\mathbf{c}$ itself, such that:

$$h(t) = \mathbf{c}^T T \mathbf{c} \tag{9}$$

The diagonal elements in the T matrix thus render $h(t)$ proportional to the square of the individual conflict vector components. The choice of the square law relation is not entirely arbitrary, in that it renders $h(t)$ insensitive to the algebraic sign of conflict components. The square law dependence also reduces the relative significance of small conflicts in a manner which may be convenient if, as argued earlier, a low level of sensory conflict is normally present in daily life. The off-diagonal elements in the T matrix admit at least a theoretical possibility for multiplicative interaction effects between conflicts in different sensory channels. The eigenvectors of the T matrix thus define the combination of sensory conflicts which most readily produce a particular symptom in a given subject. The scalar parameter h can be said to correspond to Reason's mismatch signal.

It could be argued that the strength of the mismatch signal may be dependent on the magnitude of the weighted conflict vector $K\mathbf{c}$, instead of $\mathbf{c}$ itself. Significant intersubject differences in the dependence of perceived body orientation on static visual and graviceptive cues has been documented by Witkin (1949). Witkin's study and those of Barrett and Thornton (1968) and Testa (1969) provide some evidence that simulator sickness susceptibility is positively correlated with measures of visual field independence in perception. These findings might be accounted for by postulating intersubject differences in K matrix coefficients to describe differences in the estimated direction of down in Witkin's experiments, and by assuming that a higher absolute weighting assigned to the graviceptive cues, reflected in the vector $K\mathbf{c}$, is somehow responsible for the observed differences in motion sickness susceptibility. However, better evidence on this point is needed. Until a relationship between sensory cue weighting in movement control and motion sickness is more clearly established, it is appropriate to express sensitivity to conflict vector components in a way which does not formally imply a dependence on K matrix coefficients (e.g. Equation 9).

4.2 Time Course of Symptoms

If sensory conflict is normally present to some degree and plays a major role in movement control as well as in sensory motor adaptation, then motion sickness sensitivity may just be an expression of neural or humoral "cross-

talk" between movement control circuit and symptom production centers due to sustained functional "overloading" of conflict neurons. Alternatively, the triggering mechanism may be less direct, and perhaps involve mechanisms which respond to the average level of conflict in sensory modalities, evaluate the movement control function and then initiate updating of the "internal models" used in movement control. Although, it is conceivable that the intiation of emesis may have some evoluationary survival value in the sense proposed by Claremont and Triesman, one could also argue that motion sickness sensitivity to conflict is merely an unfortunate epiphenomenon, infrequently encountered until the era when passive means of locomotion were developed—a recent event in the timescale of vertebrate evolution. Whatever the nature of the coupling between the movement control and symptom production systems, there is evidence that temporal dynamics and threshold mechanisms are involved, which ought to be represented in any mathematical model for motion sickness.

Graybiel (1969; 1975) has emphasized that although vestibular reflex phenomena such as nystagmus and postural disequilibrium are invariably of short latency, motion sickness symptoms are, on the other hand, characterized by a significant delay in appearance after stimulus onset in a manner suggesting some sort of temporal summation ("cumulation") of the stimulus; by a subsequent increase in symptom severity, and by a perseveration of symptoms after the stimulus has been removed. Also, the latency and duration of various symptoms differs somewhat between modalities (cf. Crampton, 1955; McLure et al., 1971). These experiments and the present argument that some level of conflict is likely present in daily life in the asymptomatic individual appear to rule out the notion that symptom level is simply directly proportional to a mismatch signal, as Reason (1978) suggests.

In the physical sciences, an analysis of the time course of system response to well defined stimuli can be used to deduce information about the dynamic properties of the system. Qualitative anecdotal descriptions of onset and recovery from provocative stimuli are abundant in the literature. Unfortunately, however, there actually is relatively little quantitative data available taken under controlled conditions appropriate for use in analysis. There appear to be a number of explanations for this. The emphasis in research to date has been to quantify susceptibility and adaptation in individual subjects. The cardinal symptom of motion sickness, nausea, cannot be objectively measured with an instrument, but rather must be assessed using psychological scaling techniques. The usual experimental paradigm has been to define a clearly recognizable symptom, such as vomiting, or some other combination of symptoms as an experimental endpoint, and to describe the profile of the motion cue stimuli required to reach it. The Pensacola Diagnostic Rating Scale (Graybiel et al., 1968) or one of its variants has been employed for endpoint determination by many workers. The presence and/or strength of epigastric awareness and discomfort, nausea, drowsiness, salivation, headache, dizziness, and sensation of warth are subjectively assessed by the subject working with a trained observer who also subjectively evaluates the extent of pallor and cold sweating. The individual symptom scores are only ordinal: for example, the subject is not asked to report a level of "Nausea II" when sensation is twice the level reported as "Nausea I". To provide an approximate relative measure of sickness severity in subjects showing different symptom patterns, a weighted sum of all symptom scores is taken. In the literature, there has been an (unfortunate) tendency to report only the weighted sum of symptom scores. The nature of the dynamics of the different symptom modalities is thereby obscured. Although the Pensacola method has repeatedly been demonstrated to serve the purposes for which it was intended (endpoint determination), the complexity and nature of the Pensacola scor-

ing method does not lend itself easily to studies in which the magnitude of the various symptoms is frequently assessed.

Stevens (1974) and coworkers have repeatedly demonstrated that observers can reliably make numerical estimates of subjective sensations resulting from a wide variety of sensory stimuli (e.g. loudness, vibration, electric shock) using techniques designed to produce a "ratio" scale, in which the subject is instructed to make a numerical report proportional to the apparent magnitude sensation. The experimenter may prescribe a standard sensation ("modulus") by presenting a control stimulus, and instruct the subject to call the resulting sensation some particular number, for example, "10". The use of a ratio scale has the advantage that a doubling of the reported score may be presumed to correspond to a doubling of actual subjective sensation. Ratio scaling psychophysical measurement techniques are probably quite appropriate for studies of the dynamics of subjective motion sickness symptomatology, but curiously have been little used. Dichgans and Brandt (1973) employed a ratio scaling method to record the intensity of apparent tilt and nausea sensation in subjects participating in experiments on Coriolis and pseudo-Coriolis effects. However, the authors did not report the details of their technique, or use it to document subjective nausea versus time. Reason and Graybiel (1979) showed that overall subjective discomfort in motion sickness can be quickly self rated by subjects using an 11 point scale (0 = "I feel fine"; 10 = "I feel like I am just about to vomit"). A monotonic correlation with the Pensacola Rating Scale was documented. Results obtained from subjects making Coriolis head movements in a rotating room whose angular velocity was increased in staircase fashion demonstrated the latency of symptom onset, the subsequent increase in symptom severity, and a delay of several minutes in recovery after the stimulus was removed. Consistent transitory oscillations in well being were reported in individual subjects. Unfortunately, however, the instructions given to the subjects did not indicate that, for example, a doubling of the score reported should correspond to a doubling of subjective sensation.

Bock and Oman (1982) studied the dynamics of subjective discomfort using head movements made while wearing left-right vision reversing glasses as the provocative stimulus. Sensory conflict is then presumably related to head angular velocity. Subjects were required to turn their head at regular intervals (about twice per second) to face various individual visual targets, over a period of several minutes. During this interval of time, the average level of sensory conflict is inferred to be approximately constant, since adaptation under these conditions is believed to take place over a longer time scale of some 1–3 hours (Oman et al., 1980). After an initial period of head movement, each subject eventually experienced nausea and discomfort. After some experience with a range of discomfort, each was instructed in a reporting method designed to produce a ratio scale, namely to choose a moderate level of discomfort, to call it "10", and to rate all other levels relative to this reference. After an additional practice period, discomfort scores were recorded during repeated sequences of stereotyped head movement, interspersed with periods of eye closure and no head movement, so as to permit recovery. Typical responses for three subjects are shown in Fig. 10. The initial stimulus period in which the modulus was established is not shown. Although the amplitude of the curves for individual responses cannot be directly compared, because the modulus chosen by each subject was probably different, the responses of each subject appeared internally consistent. Subjective discomfort increased during each controlled head movement sequence, and decayed between sequences to a level which itself appeared to gradually increase with time, as if reflecting the cumulative effect of all previous head movement sequences. Upon this slowly rising response component was superimposed a second

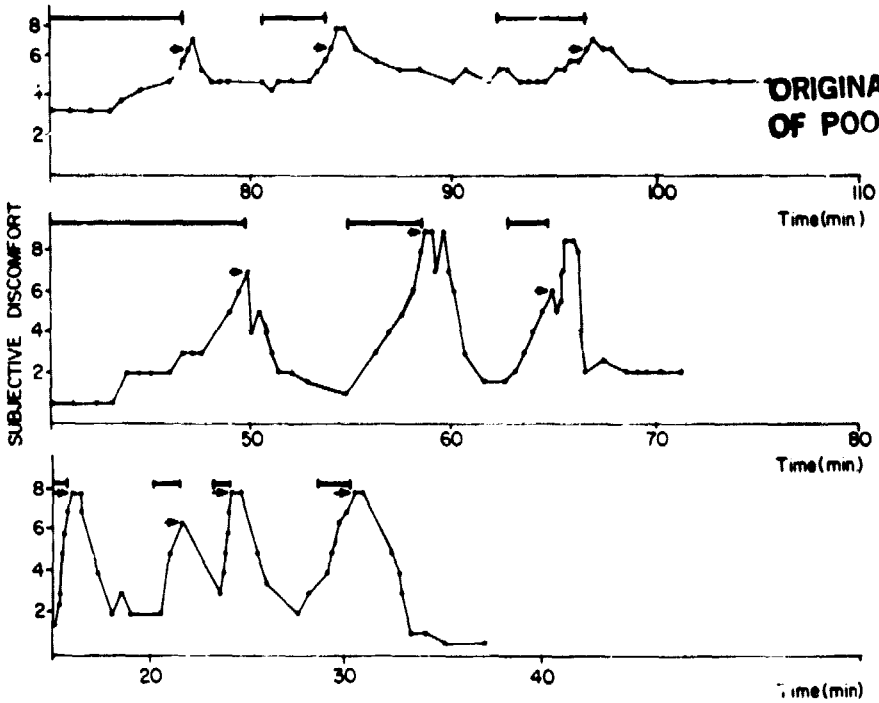

ORIGINAL PAGE IS
OF POOR QUALITY

Fig. 10. Subjective Discomfort vs. Time for 3 subjects (Bock and Oman, 1982). The duration of each sequence of stereotyped head movement is indicated with a dark bar. Arrow indicates subjective discomfort report obtained just prior to termination of head movement.

"fast" response component associated with each sequence of head movement. After the beginning of each head movement sequence, discomfort scores increased in a gradually accelerating fashion from the previous "slow component" level after a short latency. (This short latency of discomfort onset contrasted sharply with the much longer latency to initial onset of discomfort when subjects made head movements at the beginning of the experiment at a time when no subjective discomfort symptoms were present.) When head movement ceased, and the subject closed his eyes, the "fast component" exhibited a characteristic pattern. In many subjects, discomfort continued to increase for a few moments before decaying. Discomfort immediately started to decrease in certain others. One subject reported a short post-stimulus oscillation. However, it was apparent that the dynamic behaviour of the fast response component to the head movement sequence was reasonably stereotyped from one sequence to the next, and could be considered an individual characteristic. In some cases, it was possible to limit the increase of the slow component by appropriately extending the relative duration of the eye closure periods. After removal of the goggles at the end of the experiment, most subjects required several hours to completely recover.

4.3 Preliminary Model for Symptom Dynamics

The descriptions of Bock and Oman (1980), Graybiel (1969, 1975), and Reason and Graybiel (1969) appear sufficiently consistent to permit the formulation of a heuristic dynamic model for symptom production in response to sensory conflict. This model, shown schematically in Fig. 11, consists of a pair of linear transfer function elements (which have conflict "averaging" characteristics) cascaded

ORIGINAL PAGE IS
OF POOR QUALITY

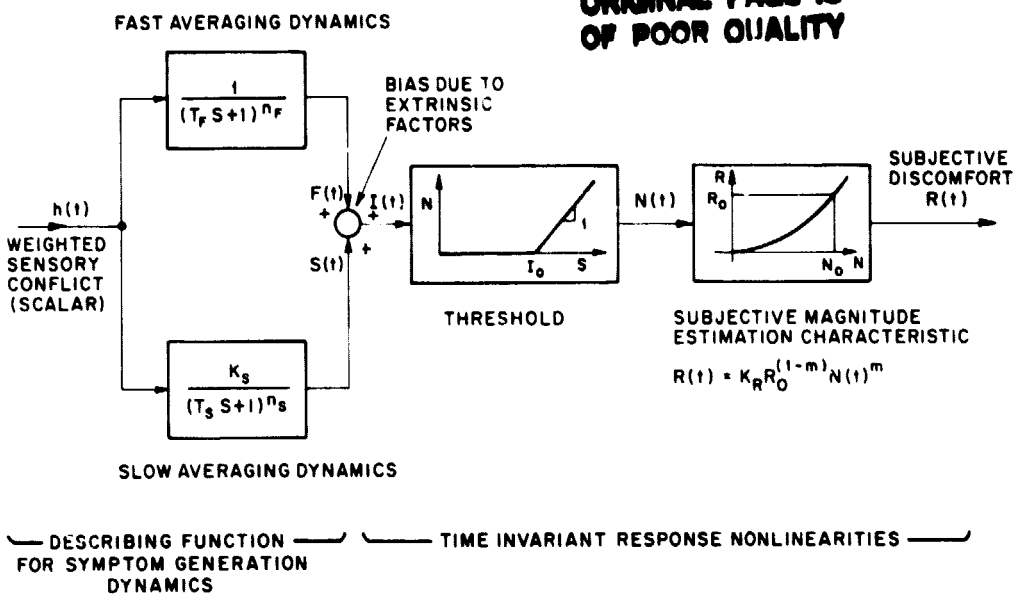

Fig. 11. Preliminary dynamic model for motion sickness response pathways (see Fig. 8 for sensory conflict generation mechanisms. Blocks shown above representing conflict averaging dynamics contain mathematical expressions for low pass filters written in terms of the Laplace transform variable S.)

successively with a threshold element and a "power law" subjective magnitude estimation characteristic. The input to this component of the overall motion sickness model is the weighted sensory conflict scalar quantity $h(t)$ defined by Equation 9. Model output is subjective discomfort. How the various variables in the model behave with time in resonse to four sequences of head movement, as in the Bock and Oman experiments, is demonstrated in Fig. 12. The Bock and Oman experiment was designed such that a constant value of $h(t)$ can be assumed during each of the four head movement sequences.

The conflict averaging dynamics are here represented by two linear, nth order, low pass filters, arranged in parallel, thus creating "slow" and "fast" components in the model response. At any moment in time, the output of the "fast" or "slow" dynamic element may be considered to be an appropriate measure of the average value of $h(t)$ over the previous T_f or T_s minutes, respectively. The steady state "gain" of the slow averaging component dynamics is assumed large, relative to that of the fast component dynamics. However, the slow component time constant, T_s, is also large perhaps 30 to 60 minutes. In contrast, the fast component time constant T_f is short, on the order of 1 to 2 minutes. As a direct consequence, the fast component response $F(t)$ dominates the threshold element input $I(t)$ for the first T_s minutes in response to the onset of a step increase in conflict. Thereafter, $I(t)$ increases more gradually, but to a relatively much higher level. (The distinction between the "slow" and "fast" components is made here to match the phenomenological description of Bock and Oman. It would be equally appropriate to combine these two transfer functions algebraically into a single linear transfer function with a single output. However, the resulting transfer function expression would be less intuitable to many.)

In the model, the value of the threshold (I_0) is assumed sufficiently high so that the model predicts the subject to be asymptomatic at the low (but nonzero) levels of the conflict parameter associated with normal living. However, when a long duration, moderate amplitude in-

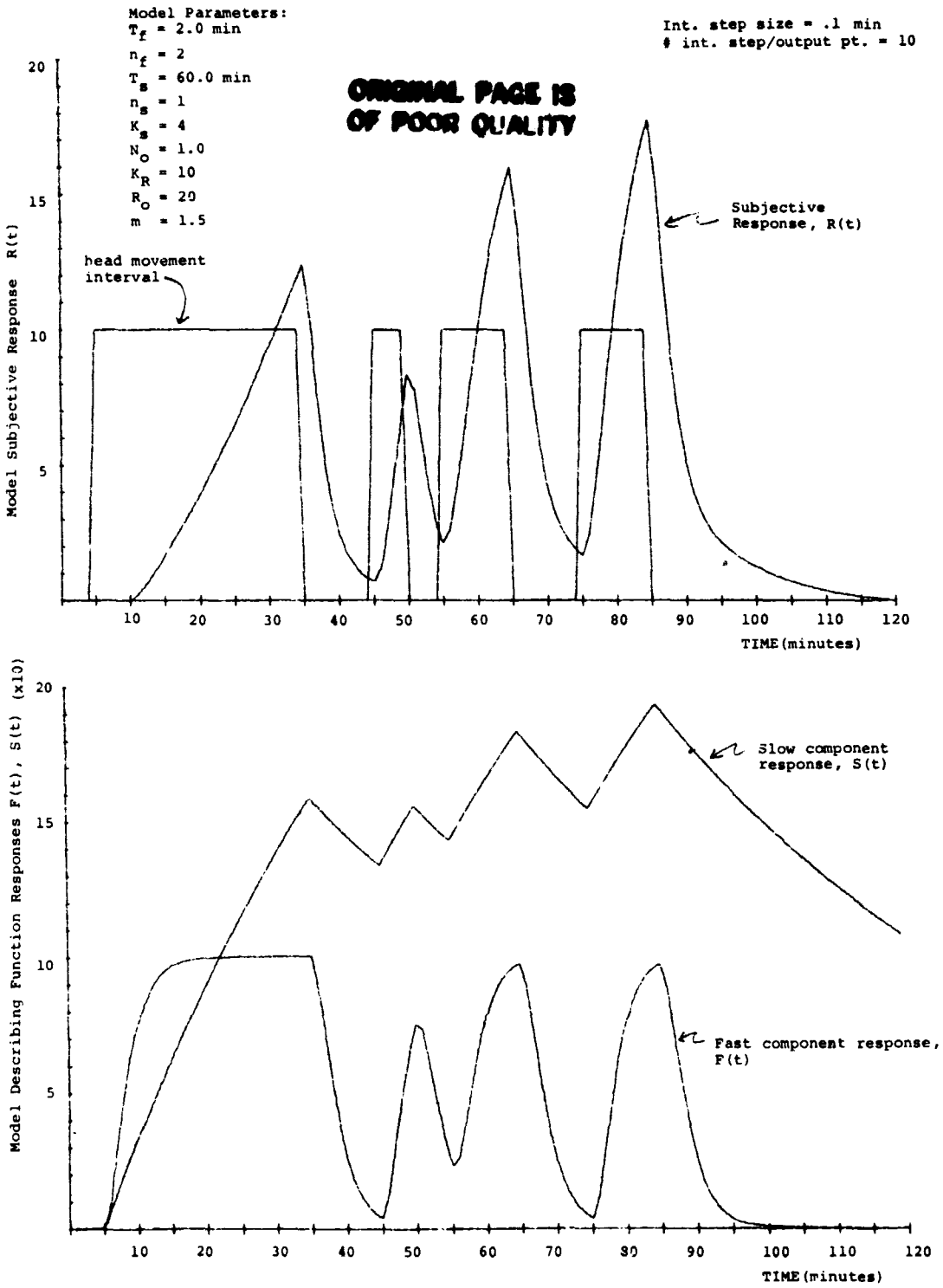

Fig. 12. Response of preliminary symptom production model (Fig. 11) to four periods of constant conflict head movement. Top figure shows predicted subjective magnitude estimate ($R(t)$); Bottom figure shows time response of fast and slow linear averaging dynamics $F(t)$ and $S(t)$.

crease in conflict is encountered, $I(t)$ increases above threshold after a relatively long latency determined primarily by T_s and K_s. The 2 Hz constant RMS amplitude "burst" of conflict presumed associated with head movement sequences in the Bock and Oman experiments would be expected to eventually produce subjective discomfort as shown in Fig. 12. When the slow component discomfort baseline is above threshold, and the head movement stimulus is reapplied, the dynamics of fast component response are clearly exhibited, superimposed on the slow component baseline, which reflects a longer term average of the conflict level being encountered. If discomfort has been sustained for a long period, the time required for discomfort to disappear after conflict has returned to non-provocative levels is determined primarily by the long time constant T_s in the model. The model appears to mimic many aspects of the subjective discomfort reports obtained by Bock and Oman.

The model predicts a contrasting result if a very provocative stimulus is applied, or if the subject's threshold is relatively low. In such cases, the latency of discomfort to onset of the conflict stimulus will be much shorter, as the response is initially dominated by the fast component. The recovery time after cessation of an intense conflict stimulus is expected to be relatively quick. However, if an intense stimulus is successively reapplied, the slow component discomfort baseline may increase more rapidly than for moderate stimuli applied for the same intervals. The relatively short latency of symptoms to very provocative stimuli predicted here is consistent with Reason and Graybiel's (1969) description of symptoms resulting when subjects make Coriolis head movements in a rotating environment (5 rpm). In highly susceptible subjects, deterioration in well-being is reported almost immediately after the onset of provocative head movements.

The shape of the suprathreshold model response to intervals of maintained conflict is determined by the order (N_f) of the fast component dynamics, the time constant (T_f), and upon the exponent m assumed for the subjective magnitude estimation characteristic. To describe the behaviour of some subjects, it may be more appropriate to employ fast component averaging dynamics whose transfer function has separate real roots. Oscillatory behaviour reported in individual subjects by Reason and Graybiel and also by Bock and Oman might be better described by dynamics of similar averaging character, but with an oscillatory step response. In the present model, use of an integer exponent N_f of 2 or greater causes an inertia effect in the fast component dynamics, resulting in an accelerating increase in discomfort after stimulus onset, and also a brief rise (overshoot) in discomfort after the stimulus has been discontinued. The accelerating increase in discomfort—corresponding to the apparent "avalanche" phenomenon described by Reason and Graybiel—is also influenced by the exponent chosen for the subjective magnitude estimation characteristic, m, which is here assumed greater than unity. It is convenient to view this subjective magnitude estimation characteristic as a representation of Stevens' "Psychophysical Law" (reviewed by Stevens, 1974) even though the putative conflict stimulus is an internal one in the case of motion sickness. The choice of an exponent greater than unity is consistent with the power law exponents experimentally determined for subjective sensations creased by a variety of external physical stimulus modalities.

In Fig. 11, an additional variable is shown summing with the output of the averaging dynamics, to reflect the likelihood that an individual subject's threshold may vary somewhat about the average value I_0, depending on "extrinsic" factors such as anxiety level, the presence of psychologically aversive sights and smells, irritative gastrointestinal stimulation, etc. (In Fig. 12, the value of this variable is assumed to be zero.) To the extent that the extrinsic variable level changes from experiment to experiment, a single measure of laten-

cy to symptom onset would not be expected to be a particularly effective way to characterize overall individual motion sickness susceptibility. Nonetheless, such measures are commonly employed in practice. Experimental measurement of symptom dynamics as well as threshold may provide additional useful characteristic information.

Many (but not all) motion sick subjects frequently report a sudden improvement in subjective well being immediately after the act of vomiting. Further research is necessary before a decision can be made as to how to reasonably represent this phenomenon in the present model. Vomiting might be considered to suddenly shift the level of the extrinsic variable described above, or to reset some of the state variables or time constants in the symptom generation dynamics.

The basic notion inherent in the present model, then, is one of continuous, dynamic, subliminal "cumulation" of both indigenous and provocative conflict stimuli by mechanisms whose response to a sustained conflict input is bounded, as represented here by low pass averaging dynamics and a threshold. This is an important conceptual feature of the response portion of the model, and appears to differ somewhat from the temporary ("facultative") linkage concept proposed by Graybiel (1969).

8.4 Some Further Model Implications

In a given experimental or operational circumstance, the time history of the conflict stimulus, the dynamics of the subject's fast and slow response components, and the "dynamic range" of discomfort sensations available between discomfort onset and when vomiting occurs would be expected to determine how far the individual may go up the discomfort scale before emesis becomes inevitable. Subjects free to make head movements in a rotating room, in weightlessness in a spacecraft, or while wearing prism glasses would find that they initially could move with abandon. However, discomfort would eventually be experienced after a time dependent on the potency of the conflict stimulus. As the slow component discomfort baseline continued to increase, the number of episodic head movements the subject dares to make without triggering emesis would be restricted. As the discomfort level increased, a given head movement sequence would seem more and more provocative because of the increasing slope of the subjective magnitude estimation characteristic. With his head movement capability thus functionally limited after a sustained period of maintained discomfort, the subject could recover only by remaining inactive for a period of time of the same order as T_s, so as to permit the slow response component to decline to a lower level. On the basis of the model, one would expect that subjects who become sick under conditions in which they have a degree of voluntary control over the conflict stimulus might well have difficulty avoiding vomiting unless they are quite familiar with their own response dynamics. If they attempt to limit their discomfort to a moderate level simply by reducing the conflict stimulus in direct proportion to the discomfort they feel, a feedback analysis suggests that the long delay times characteristic of the discomfort modality feedback may well be expected to introduce oscillatory modes into the closed loop behaviour of their discomfort sensation. The oscillations associated with the slow components dynamics will be at an extremely low frequency (on the order of $1/2\pi T_s$). Some subjects may learn to suppress these oscillations by introducing sufficient control lead, in the form of *a priori* knowledge of their own response dynamics. However, control of the very low frequency slow component may be difficult. The subject may be forced to adopt the alternative, non-linear control strategy of working only until discomfort rises to a safe endpoint learned through experience, and then resting until symptoms subside.

In the present model, subjective discomfort is represented as a discrete perceptual modal-

ity. Experimentally, discomfort reports often show a strong correlation with reports of nausea: In many subjects—but certainly not all—the dynamics of nausea perception appear similar to the dynamics of subjective discomfort, at least in an approximate sense. However, discomfort reports also commonly show some correlation with other symptoms, such as cold sweating, drowsiness, headache, and subjective warmth. As reviewed earlier, the behavior of the different symptom modalities, though predictable, appears to be temporally somewhat different under experimental conditions, indicating that the thresholds and response dynamics are likely heterogeneous to a degree. However, to the extent that sensory conflict provides a common stimulus to all response modalities, it should be possible to develop symptom production models which describe the behaviour of most individual modalities. Infrared skin reflectance (photoplethysmography) could be used to document the time course of pallor. The method of McClure et al. (1971) might be employed to obtain the appropriate data for the thermal sweating modality. With additional outputs, the overall motion sickness model would provide a more complete description of the physiological responses triggered in motion sickness.

The neurophysiological events which underlie the process of subjective symptom generation are obviously highly complex. One could speculate that the averaging dynamics appearing in the present model might be a manifestation of internal rate dependent processes which are regulated by negative feedback mechanisms, perhaps involving elements of the central autonomic system. However, such "averaging" behaviour could equally well result from some more passive process, such as a diffusion or transport mechanism, or reflect the dynamics of sequential activation or cell units in the reticular core of the brainstem. Whether there is any physical or functional relationship between the dynamic processes which determine the time course of symptoms, and the temporal averaging processes which may be involved in evaluating sensory conflict and triggering sensory-motor adaptation is unclear at present. Sensory motor adaptation has been repeatedly demonstrated in the absence of overt symptomatology. A physical interpretation of the "averaging" dynamics in the model therefore cannot yet be legitimately made.

Regardless of the physical mechanism involved, it is also unlikely that the behaviour of the physically distributed, complex systems which produce discomfort sensation can be represented in fine detail by any simple set of linear differential equations. On the other hand, a linear model may capture the major behavioural characteristics of a nonlinear system in an approximate and practically useful way. In control engineering, linear "Describing Function" models (Goldfarb, 1956) are often used this way for analytical modelling purposes. The linear averaging dynamics in the present model are employed in a similar sense.

5. Discussion and Conclusions

The models developed in the previous two sections are brought together in Fig. 13. The principal output of the completed model is subjective discomfort, although the existence of additional symptom production pathways for other modalities such as nausea, pallor, sweating, etc. is explicitly indicated.

Although the model must be regarded as preliminary and heuristic without further experimental validation, it derives significant conceptual validity from the fact that:

a) It incorporates and extends many concepts in the qualitative models proposed by von Holst (1954), Held (1961), and Reason (1978) in ways which appear to remedy some of the deficiencies and limitations of these approaches.

b) It employs a model for orientation estimation and movement control which is mathematically congruent with the approach to modelling orientation and manual control defined by Young (1970) and coworkers, for which experimentally validated models now exist.

c) It accounts for experimental evidence for preprogrammed movement control.

d) It employs a preliminary model for symptom production dynamics which mimics certain nonlinear dynamic aspects of symptom time course which have been experimentally described.

In this final section, some of the main conclusions deriving from the model analysis are reiterated in the context of further discussion of how adaptation might be achieved to nauseogenic stimuli in ways involving both the movement control and symptom production components of the model.

On the basis of arguments developed in preceding sections, it is concluded that:

1. Control theoretic considerations suggest that the CNS should employ an internal model referenced strategy in body movement control, because not all important states of the body and its sensory organs can be directly measured. In the present analysis, this internal "model-within-a-model" is represented by a vector integrator and $\hat{A}$, $\hat{B}$, and $\hat{S}$ matrices, which specify the CNS assumptions concerning the dynamic behavioural characteristics of the body, sensory organs, and any vehicles under manual control. The internal model is used to compute an estimated state vector on a continuous basis, which is employed in combination with a desired state vector representing volitional input to produce apparently preprogrammed motor outflow. The internal model is also simultaneously employed to predict expected sensory input. A conflict vector representing the difference between actual and expected input can be exploited to correct motor outflow when external disturbances are encountered. Hence, the role of conflict signals may not be confined to triggering sensory adaptation and motion sickness, as is sometimes tacitly assumed. Although the existence of conflict neurons has not been demonstrated, the ubiquitous vertebrate sensitivity to motion sickness suggests that the conflict computation is explicitly made, at least within the vestibular modality.

2. Sustained levels of sensory conflict are likely continuously present in daily life which do not result in the appearance of motion sickness symptoms, because of the presence of noise processes in sensory pathways, and the fact that the CNS's knowledge of body and sense organ characteristics may not be exactly correct in all details. By monitoring sensory conflict in the various afferent modalities, the CNS may evaluate the performance of its spatial orientation and movement control mechanisms, assess the adequacy of the internal models employed, and also detect the presence of unanticipated external disturbance forces act-

ORIGINAL PAGE IS
OF POOR QUALITY

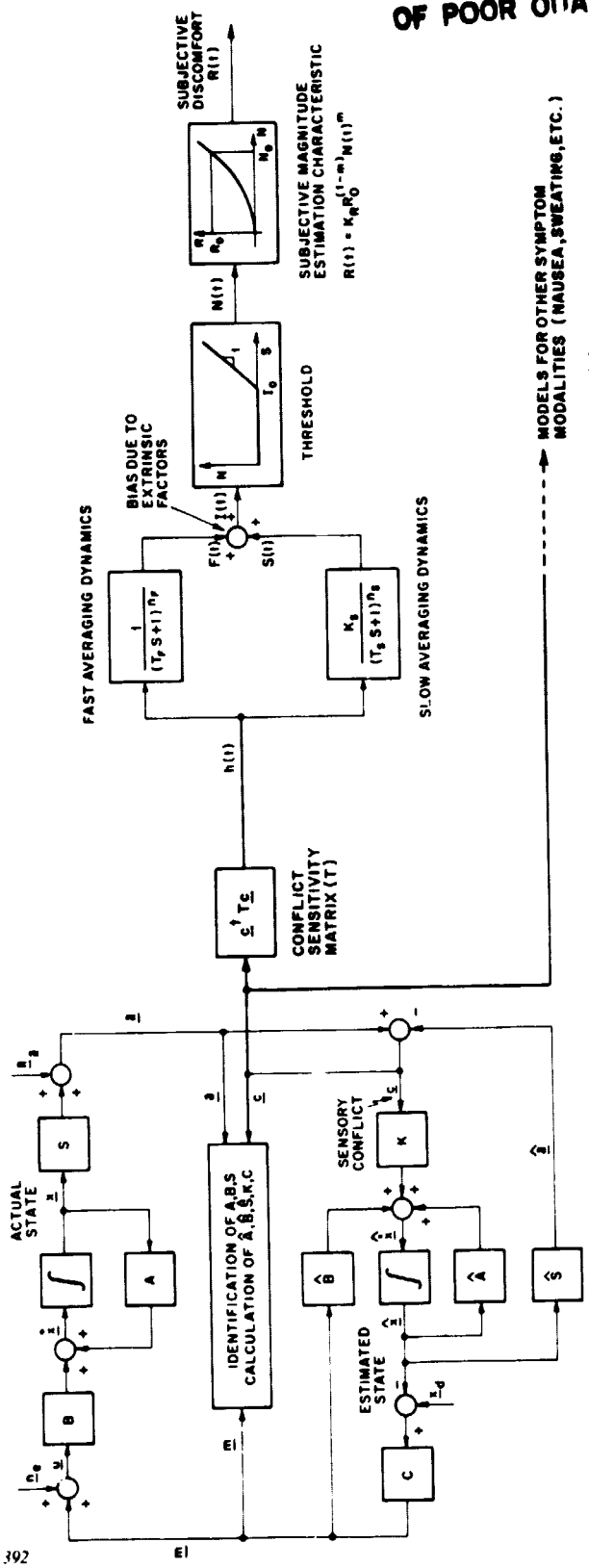

Fig. 13. Heuristic Model for the Dynamics of Movement: Control, Sensory Conflict, and Motion Sickness.

ing on the body. Evaluation of conflict signals in this context can be made through a process equivalent to time domain averaging. Unanticipated external force inputs which produce sensory conflict are assumed to be brief. When the absolute value of conflict is high for a sustained period, this may be taken to indicate that body or sensory system dynamic characteristics have been changed, and that sensory conflict is being produced because an invalid internal model ($\hat{A}$, $\hat{B}$ or $\hat{S}$) is being employed. Exposure to weightlessness, use of vision distorting glasses, and operation of a fixed base flight simulator are representative situations. Such situations producing changes in the $\hat{A}$, $\hat{B}$ and $\hat{S}$ matrices are here termed "sensory rearrangements".

3. When conditions of sensory rearrangement are encountered, orientation and motor control deficits would be expected to result, and to persist until the CNS has successfully identified the altered system characteristics, and adopted an updated observer and controller ($\hat{A}$, $\hat{B}$, $\hat{S}$, C K matrices). No assumptions are made in the present analysis regarding identification strategy. However, it is noted that strategies which involve active movement or *a priori* knowledge of external disturbance statistics are the only means available. Identification and updating of the internal model is likely triggered by a persistent increase in sensory conflict. Experimental evidence suggests that the CNS has the ability to retain multiple internal models, and to employ them in the appropriate context. This capability appears extensive with respect to aspects of body and vehicle dynamics which undergo frequent change, but to be more limited with respect to accommodation to changes in sensory organ characteristics.

Adaptation may well not be a permanent phenomenon. The possibility cannot be ruled out that subjects adapted to a rearranged sensory environment may spontaneously lose their adaptation if they do not interact with the rearranged environment (e.g. Graybiel & Knepton, 1972). When subjects return to a familiar environment, subjects readapt relatively quickly, indicating that the processing required for familiar internal models may be quickly reinstituted. This may account for the brief duration of disorientation and motion sickness in adapted subjects leaving "rearranged" environments.

4. In the case of relatively specific types of sensory rearrangement, in which the change is limited to, say, a specific sensory modality, the CNS could conceivably respond simply by disabling the offending modality. This is an appropriate strategy in a model reference control system where many sensory measurements taken are somewhat redundant in terms of the information being conveyed regarding body state. Receptors under efferent control could be turned off at the periphery, and the appropriate elements in the $\hat{S}$ matrix updated. Alternatively, sensory deactivation could be accomplished more centrally, and in the context of the model, by changes in the K matrix. It has been speculated that CNS adaptation to weightlessness may involve changes in the processing of otolith information of this type. While this may be a functionally appropriate response when pathology has destroyed the function of a sense organ, it is not the case when sensory organ response characteristics have merely been systematically *changed*. Unless exposure to weightlessness produces severe otopathology, otolith output still can convey useful information, once the CNS has learned to interpret it. The rendering of the major graviceptive modality insensitive can be expected to result in reduced sensory-motor performance in tasks where it plays important functional roles in providing state information. Tests of otolith dependent movement, spatial orientation and movement control tasks on-orbit are indicated to resolve this issue.

5. The symptoms of motion sickness appear when sensory conflict vector components to which the subject is sensitive (defined in the present model by a quadratic relationship with the matrix T) have large values when averaged over periods of time comparable to those

which appear to characterize the dynamic responses of subjective symptom production mechanisms. A nonlinear model containing slow and fast component dynamics which effectively average sensory conflict is proposed. The model appears to describe some aspects of the time course of subjective discomfort, including discomfort latency, "avalanche", overshoot and recovery. It is unclear whether there is any physical or functional relationship between the dynamic processes which determine the time course of symptoms, and the temporal averaging processes which may be involved in evaluating sensory conflict and triggering sensory-motor adaptation.

6. Not all forms of motion sickness result from conditions of "sensory rearrangement". Sustained levels of sensory conflict should result in individuals exposed to sustained, unpredictable externally imposed motion, as when riding in an aircraft in turbulence. In the context of the present model, if normal visual cues are present, this situation is not described as a change in the A, B, or S matrices representing body and sensory system characteristics, but rather as an external "noise" input, $\mathbf{n}_e$, to the movement control system. Exposure to such sustained noise (as when riding as a vehicle passenger), is probably a new experience for the vertebrate nervous system, in an evolutionary context. An abnormal interaction between the neural movement control system and centers regulating vomiting and other physiological functions may simply represent a neural "overload" phenomenon; a newly discovered flaw in human design. Model analysis suggests that subjects experiencing passive motion could adapt to a certain extent by becoming familiar with the spectrum of the external disturbance input, and reduce conflict by appropriate modification of the K matrix. If the external disturbances are predictable in a more exact temporal (as opposed to statistical) sense, the CNS could adopt an appropriate dynamic model which predicts the input in the time domain, representable in the model by an appropriate set of state variables added to the state vector, and augmentation of the $\hat{A}$ matrix. The activation of such an internal oscillator corresponds to excitation of the "Pattern Center" in the model for vestibular function proposed by Groen (1960), and could be used to describe the acquisition of "sea legs" and to account for motion sensation and neuromuscular aftereffects when coming ashore. The present model readily accounts for the well known difference in motion sickness susceptibility between drivers and passengers of vehicles as well. Operators performing a vehicle control function are able to predict the consequences of their control actions via internal feedback through the $\hat{B}$ matrix (Equation 7). Passengers have no such knowledge, and must regard vehicle motion as an external influence. Passengers would thus be expected to experience much greater sensory conflict. This condition would be exacerbated if their visual cues were restricted as well, although the latter aspect is then viewed as involving visual sensory rearrangement.

7. Reason's "Neural Mismatch" model emphasizes that motion sickness adaptation may take place via updating of the "Neural Store". This corresponds to updating the $\hat{A}$, $\hat{B}$ and $\hat{S}$ matrices in the present model. Such changes optimize sensory-motor performance. However, changes in the subject's *sensitivity* to conflict (formally, by a reduction in T matrix eigenvalues) or a change in the subject's symptom response characteristics (by an increase in dominant time constants, or a change in threshold) would also reduce a subject's reaction to nauseogenic stimuli. These forms of adaptation would produce a generalized form of adaptation which is independent of the nature of the environmental change producing the sensory conflict stimulus. Most research (summarized by Guedry, 1965b) indicates that motion sickness adaptation is highly specific to the stimulus conditions under which it was acquired. However, other studies (e.g. Reason and Graybiel, 1969; Graybiel and Knepton, 1972) indicate that some degree of

generalized adaptation may be achieved. The studies of Graybiel and Knepton (1972) suggest that loss of motion sickness adaptation after leaving the slowly rotating room has at least two identifiable components: one which is rotation direction specific and which decays in hours after cessation of rotation, and a second component, non direction specific, which decays slowly over many days. Hence it seems likely that both environment specific and generalized adaptation may take place simultaneously, although perhaps over different timescales. The approach taken by the Soviet Union in preconditioning cosmonauts to spaceflight by repeatedly exposing them to a wide variety of visual and vestibular stimuli (Homick, 1980) may be seen as an attempt to induce generalized adaptation. Their lack of apparent success suggests that the protection which can be conferred by this type of adaptation is usually not absolute. It seems likely that drugs such as scopolamine which have been demonstrated effective against motion sickness (Wood and Graybiel, 1968) exert their primary action so as to reduce sensivitity to conflict (e.g. T matrix eigenvalue reduction) since they do not appear to influence sensory or motor function in any dramatic way. Anti-motion sickness drugs do not confer immunity on all individuals. It would be interesting to know whether these drugs alter the characteristic dynamics of subjective discomfort and nausea. Biofeedback techniques are also currently being explored in the US (Cowings, 1980; Levy et al 1981) and in the Soviet Union (Homick, 1980) to control symptoms. Although such training is focussed on autonomic function, and seems unlikely to influence conflict generation mechanisms per se, to the extent that it is possible to influence symptom sensitivity to conflict, symptom production dynamics, or symptom thresholds, such training may represent a productive approach. It is clearly important that experiments on motion sickness adaptation, drug effects, and biofeedback be designed so that sensory/motor adaptative changes (represented here by alterations of $\dot{A}$, $\dot{B}$, $\dot{S}$, K, C) can be distinguished from adaptive changes in symptom production mechanisms (T, symptom dynamics, thresholds). To accomplish this, sensory motor performance must be studied simultaneously with symptomatology.

8. Without further systematic experimental validation, the motion sickness model in its present form must be regarded as predominantly heuristic. Although the model is based on optimal control and estimation considerations, which, in other modelling applications, have been demonstrated to successfully predict aspects of human spatial orientation and manual control, the present model represents a statement of the conflict hypothesis for motion sickness which, although widely favored, must be regarded as yet unproven. The present model is an advance in that it is an analytically concise statement of a conflict hypothesis; the model deals successfully with certain inherent difficulties with the "efference copy" concept; the model postulates and describes a major dynamic functional role for conflict signals in movement control as well as in adaptation; it accounts for the role of active movement in creating motion sickness symptoms in some experimental circumstances (e.g. weightlessness) and of alleviating them in others (e.g. susceptibility of pilots vs. passengers). The relationship between motion sickness produced by "sensory rearrangement" and by external motion disturbances is explicitly defined; a nonlinear conflict averaging model is proposed which, although preliminary, describes some important dynamic aspects of experimentally observed subjective discomfort sensation; the model allows for the possibility of adaptive mechanisms which do not involve internal model (Neural Store) updating. It is hoped that the preliminary model presented here may therefore be useful to other workers as a means of organizing their knowledge and interelating the results of different experiments. Such a model is also necessary in order to help define critical experiments to test the conflict hypothesis for

motion sickness in a more quantitative fashion.

The idea of taking more of a "systems" approach to the study of motion sickness etiology is appealing. On the other hand, the present model has obvious limitations in that many physiological mechanisms are only abstractly represented. A penalty for this abstraction is that the model, in its present form, can only be used to describe, and not dynamically predict, adaptive phenomena. Also, the traditionally trained neurophysiologist may feel that the assumptions required in formulating the model seem to take us hopelessly far beyond known mechanisms associated with individual neurons. We ultimately seek models for motion sickness which not only predict its time course, but are physiologically very descriptive. We can hope that with continued quantitative and systematic research, mathematical models and neurophysiological understanding of sensory conflict and motion sickness will eventually converge.

Appendix I

ORIGINAL PAGE IS
OF POOR QUALITY

This appendix illustrates how a set of differential equations describing body sway dynamics may be written in state variable notation.

The first step is to specify the linearized differential equations which describe the physical and physiological situation at an appropriate level of detail. The example presented here is that of a human subject standing eyes closed on a horizontally oscillating platform (Fig. 14). Simple models are described below for the inverted pendulum dynamics of the body, semicircular canal afferent response to pitching body motion, and utricular otolith response to gravito-inertial linear acceleration.

x_e = horizontal displacement of ankle joint due to platform motion

A_k = torque about ankle angle per unit ankle stretch angle ψ opposing body motion. Results from passive mechanical characteristics of muscle and connective tissue, and any spinal stretch reflex activity which is functionally independent of supraspinal control.

A_b = torque about ankle angle per unit ankle stretch rate $\dot{\psi}$

T_m = torque about ankle joint actively generated by muscles under supraspinal control; determined by CNS.

1. Body Sway Dynamics

The equation of motion for the inverted pendulum dynamics describing body sway is nonlinear and may be linearized and written as follows:

$$\ddot{\psi} = -\frac{A_b}{I_{eq}}\dot{\psi} - \left[\frac{A_k}{I_{eq}} - \frac{g}{h_{eq}}\right]\psi + \frac{T_m}{I_{eq}} - \frac{\ddot{x}_e}{h_{eq}} \quad \text{(A.1)}$$

where

M = subject's body mass

g = gravitational acceleration

h = height of center of mass above ankle joint

I_{cg} = moment of inertia of body about its center of mass

I_{eq} = moment of inertia of body about the ankle joint $= I_{cg} + Mh^2$

h_{eq} = effective length of body "inverted pendulum" $= I_{eq}/Mh$

ψ = sway angle of body; angle between true vertical and a line passing through ankle joint and body center of mass. Nominally zero.

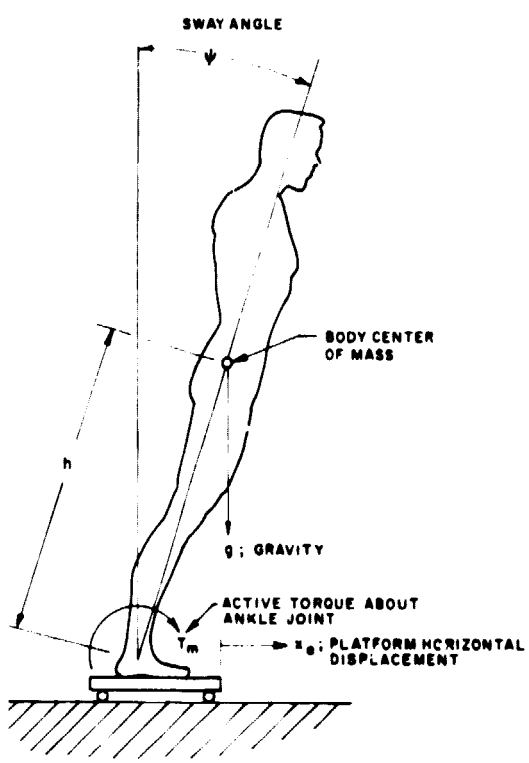

Fig. 14. Posture control example of Appendix I.

2. Semicircular Canal Dynamics

As reviewed by Goldberg and Fernandez (1975), the angular displacement of endolymph $\xi(t)$ is related to the angular acceleration of the head $\psi(t)$ by a differential equation:

$$\ddot{\xi} = -\frac{\Pi}{\theta}\dot{\xi} + -\frac{\Delta}{\theta}\xi + \ddot{\psi} \qquad \text{(A. 2)}$$

where θ is the effective moment of inertia of the endolymph, Π a viscous damping couple, and Δ the elastic restoring coefficient of the cupula. Neglecting the presence of rate sensitive and adaptive dynamics in the transduction and encoding process, the change in afferent discharge rate $a_c(t)$ produced by endolymph motion $\xi(t)$ is here modelled by:

$$a_c = -S_c\xi + n_c \qquad \text{(A. 3)}$$

where n_c is noise of neural origin, and S_c is a neural sensitivity factor (impulses/sec).

3. Otolith Dynamics

Following Goldberg and Fernandez (1975), the mechanics of the displacement δ_0 of the utricular otolith in response to gravitoinertial linear acceleration may be described by the equation:

$$\ddot{\delta}_0 = -\frac{B_0}{m_0}\dot{\delta}_0 - \frac{K_0}{m_0}\delta_0 + \frac{\Delta\varrho}{\varrho}[g\psi - d\ddot{\psi} - \ddot{x}_e] \qquad \text{(A.4)}$$

where:

m_0 = the effective mass of the otolithic membrane and otoconia
K_0 = otolithic membrane stiffness
B_0 = otolithic membrane damping
$\Delta\varrho/\varrho$ = difference in density between otolithic membrane and endolymph (about 0.66)
d = distance from ankle joint to otolith orson

Neglecting the dynamics of the transduction and encoding process, the change in utricular otolith afferent discharge rate $a_0(t)$ produced by body motion is described by

$$a_0 = S_0\delta_0 + n_0 \qquad \text{(A. 5)}$$

where n_0 is noise of neural origin and S_0 is a neural sensitivity factor.

Additional equations could be written to describe the dynamics of transduction and encoding. Other models could be formulated to describe the response of the saccular otolith, and the information arriving via other sensory modalities.

4. State Differential Equation

The physical system represented by the three models above may be recast into "state variable" notation by defining the system state vector, **x** (the "Actual State"), as a six dimensional column vector:

$$\mathbf{x} = \begin{bmatrix} \psi \\ \dot{\psi} \\ \xi \\ \dot{\xi} \\ \delta_0 \\ \dot{\delta}_0 \end{bmatrix}$$

and the input vector, **u**, as a two dimensional column vector:

$$\mathbf{u} = \begin{bmatrix} T_m \\ \ddot{x}_e \end{bmatrix}$$

Then the set of differential equations representing the system model (A. 1, A. 2, and A. 4) are simply rewritten in matrix notation in the required form

$$\dot{\mathbf{x}} = A\mathbf{x} + B\mathbf{u}$$

where

ORIGINAL PAGE IS
OF POOR QUALITY

ORIGINAL PAGE IS
OF POOR QUALITY

$$A = \begin{bmatrix} 0 & 1 & 0 & 0 & 0 & 0 \\ -\frac{A_k}{I_{eq}} + \frac{g}{h_{eq}} & -\frac{A_b}{I_{eq}} & 0 & 0 & 0 & 0 \\ 0 & 0 & 0 & 1 & 0 & 0 \\ -\frac{A_k}{I_{eq}} + \frac{g}{h_{eq}} & -\frac{A_b}{I_{eq}} & -\frac{\Delta}{\theta} & -\frac{\Pi}{\theta} & 0 & 0 \\ 0 & 0 & 0 & 0 & 0 & 1 \\ \frac{\Delta\varrho}{\varrho}(g-d)\left[\frac{-A_k}{I_{eq}} + \frac{g}{h_{eq}}\right] & -\frac{\Delta\varrho}{\varrho}\frac{dA_b}{I_{eq}} & 0 & 0 & -\frac{K_0}{m_0} & -\frac{B_0}{m_0} \end{bmatrix}$$

and

$$B = \begin{bmatrix} 0 & 0 \\ \frac{1}{I_{eq}} & \frac{-1}{h_{eq}} \\ 0 & 0 \\ \frac{1}{I_{eq}} & \frac{-1}{h_{eq}} \\ 0 & 0 \\ 0 & \frac{-\Delta\varrho}{\varrho} \end{bmatrix}$$

Note the gravity dependence of many terms in the A matrix.

5. Output Equation

By defining

$$\mathbf{a} = \begin{bmatrix} a_i \\ a_0 \end{bmatrix}$$

and

$$\mathbf{n}_a = \begin{bmatrix} n_i \\ n_0 \end{bmatrix}$$

Equations A. 3 and A. 5 can be combined into a single matrix "output equation" of the form $\mathbf{a} = S\mathbf{x} + \mathbf{n}_a$ similar to Equation 2 in the text, describing the sensory system "measurements" sent to the CNS.

$$S = \begin{bmatrix} 0 & 0 & S_i & 0 & 0 & 0 \\ 0 & 0 & 0 & 0 & S_0 & 0 \end{bmatrix}$$

Acknowledgements

I thank L. R. Young, J. T. Reason, R. Sivan, and R. M. Held for their inspiration, criticisms, and suggestions, and acknowledge with gratitude O. L. Bock for his collaboration on the measurement of subjective discomfort dynamics described herein. This work was funded by NASA Grant NSG-2032 Contract NAS9-15343, and Cooperative Research Agreement NCC9-1. I also thank J. L. Homick and N. G. Daunton for their support.

References

Bard, P., Woolsey, C. W., Snider, R. S., Mountcastle, V. B. & Bromley, R. B. 1947. Delimitation of central nervous system mechanisms involved in motion sickness. *Fed Proc 6, 72.*

Baron, S. & Kleinman, D. L. 1968. The human as an optimal controller and information processor. NASA CR-1151.

Barrett, G V. & Thornton, C. L. 1968. Relationship between perceptual style and simulator sickness. *J Applied Psych 52*, 304–308.

Bles, W. 1979. Sensory Interactions and Human Posture. Phd Thesis, University of Amsterdam; also personal communication.

Bock, O. L. & Oman, C. M. 1982. Dynamics of subjective discomfort in motion sickness, as measured with a magnitude estimation method. *Aviat, Space and Env Med, 53*, 733–737.

Borah, J., Young, L. R. & Curry, R. E. 1978. Sensory Mechanism Modelling. Advanced Systems Division, Wright Patterson AFB, Ohio: AFHRL-TR-78-83.

Brizzee, K. R. & Neal, L. M. 1954. A re-evaluation of the cellular morphology of the area postrema in view of recent evidence of a chemoreceptive function. *J Comp Neur 100*, 41.

Chinn, H. I. & Smith, P. K. 1955. Motion sickness. *Pharmacological Review 7*, 33–82.

Claremont, C. A. 1931. The psychology of sea sickness. *Psyche 11*, 86–90.

Cowings, P. S. 1980. Autogenic biofeedback training for vestibular symptomatology. *Space Motion Sickness*, NASA Johnson Space Center, Houston, TX. p. 75–86.

Crampton, G. H. 1955. Studies of motion sickness XVII: Physiological changes accompanying sickness in man. *J Appl Physiol 7*, 501–507.

Curry, R. E., Hoffman, W. C. & Young, L. R. Pilot Modeling for Manned Simulation. AFFDL TR-76-124, Vol 1, December 1976.

Dichgans, J. & Brandt, Th. 1973. Optokinetic motion sickness and pseudo-Coriolis effects induced by moving visual stimuli. *Acta Otolaryngol 76*, 339–348.

Dichgans, J. M. & Brandt, Th. 1978. Visual and vestibular interaction: Effects on self-motion perception and postural control. Chapter 25 in: *Handbook of Sensory Physiology*, Vol. 8, Part 3, *Perception*, R. Held, H. Leibowitz, H. L. Teuber, Eds., Springer, Berlin.

Evarts, E. V. 1971. Feedback and corollary discharge: a merging of the concepts, in *Central Control of Movement. Neurosciences Res Prog Bull 9*, 86–112, MIT Press, Cambridge, MA.

Evarts, E. V., Bizzi, E., Burke, R. E., DeLong, M. & Thatch, W. T., Jr. 1971. *Central Control of Movement. Neurosciences Res Prog Bull, Vol. 9*, No. 1, MIT Press, Cambridge, MA.

Gillingham, K. K., 1966. A Primer of Vestibular Function, Spatial Orientation and Motion Sickness. USAF School of Aerospace Medicine, Brooks AFB, TX, SAM Review 4–66.

Goldberg, J. M. & Fernandez, C. 1975. Vestibular mechanisms. *Physiol Reviews* 129–162.

Goldberg, J. M. & Fernandez, C. 1980. Efferent vestibular system in the squirrel monkey: Anatomic location and influence on afferent activity. *J Neurophysiol 43*, 986–1025.

Goldfarb, L. C. 1956. On some nonlinear phenomena in regulatory systems, in: *Frequency Response*. McMillan, NY.

Graupe, D. 1975. *Identification of Systems*. Krieger, Huntington, NY.

Graybiel, A. 1965. Functional disturbances of vestibular origin of significance to space flight, in 2nd Int. Symp. on Basic Environmental Problems in Space, Paris, France. US Naval Aviation Medical Center, Pensacola, FL.

Graybiel, A. 1969. Structural elements in the concept of motion sickness. *Aerospace Med 4*, 351–367.

Graybiel, A. 1975. Angular velocities, angular accelerations, and Coriolis accelerations. Chapter 7 in *Foundations of Space Biology and Medicine*, Volume II, Book 1: NASA/USSR Acad Sciences, Washington, DC.

Graybiel, A. & Knepton, J. 1972. Direction specific adaptation effects acquired in a slow rotating room. *Aerosp Med 43*, 1179–1189.

Graybiel, A & Knepton, J. 1978. Bidirectional overadaptation achieved by executing leftward or rightward head movements during unidirectional rotation. *Aviation Space Environ Med 49*, 1–4.

Graybiel, A., Thompson, A. B., Deane, F. R., Fregiy, A. R. & Colehour J. K. 1968. Transfer of habituation of motion sickness on change in body position between vertical and horizontal in a rotating environment. *Aerospace Med 39*, 950–962.

Graybiel, A., Wood, C. D., Miller, E. F. & Cramer, D. B. 1968. Diagnostic criteria for grading the severity of acute motion sickness. *Aerospace Med 39*, 453–455.

Groen, J. J. 1960. Problems of the semicircular canal from a mechanico-physiological point of view. *Acta Otolaryngol Suppl 163*, 59–67.

Guedry, F. E. 1965a. Psychophysical studies of vestibular function. *Contributions to Sensory Physiology*, Vol. 1, W. D. Neff, Ed. p. 63–135, Academic Press, NY.

Guedry, F. E. 1965b. Habituation to complex vestibular stimulation in man: transfer and retention of effects from twelve days of rotation at 10 rpm. *Perceptual and Motor Skills 21*, 459–481.

Guedry, F. E. 1968. Conflicting sensory orientation cues as a factor in motion sickness. Fourth Symposium on the Role of the Vestibular Organs in Space Exploration, NASA SP-187, pp. 45–51.

Guedry, F. E. 1978. Visual counteraction of nauseogenic and disorienting effects of some whole body motions—a proposed mechanism. *Aviation Space Environ Med 49*: 36–41.

Gyr, J., Willey, R. & Henry, A. 1979. Motor-sensory feedback and geometry of visual space: an attempted replication. *Behavioral and Brain Sciences 2*, 59–94.

Hein, A. & Held, R. 1961. A neural model for labile sensorimotor coordinations. *Biological Prototypes and Synthetic Systems 1*, 71–74.

Held, R. 1961. Exposure history as a factor in maintaining stability of perception and coordination. *J. Nervous and Mental Disease 132*, 26–32.

Held, R. & Bossom, M. 1961. Neonatal deprivation and adult rearrangement: complementary techniques for analyzing plastic sensory-motor coordinations. *J Comp and Physiological Psych 54*, 33–37.

Held, R. & Rekosh, J. 1963. Motor-sensory feedback and the geometry of visual space. *Science 141*, 722–723.

Holst, von, E. 1954. Relations between the central nervous system and the peripheral organs. *Brit J Animal Behavior 2*, pp. 89–94.

Holst, von, E. 1957. Aktive Leistungen der menschlichen Gesichtswahrnehmung. *Studium Generale 10*, 231–243.

Holst, von, E. & Mittelstaedt, H. 1950. Das Reafferenzprinzip (Wechselwirkungen zwischen Zentralnervensystem und Peripherie). *Naturwissenschaften 37*, 464–476.

Henn, V., Cohen, B. & Young, L. 1980. *Visual Vestibular Interaction in Motion Perception and the Generation of Nystagmus*. Neurosciences Research Program Bulletin Vol. 18, No. 4, MIT Press, Cambridge, MA.

Homick, J. L. Special note: space motion sickness in the Soviet manned space flight program. *Space Motion Sickness*, p. 99–103, NASA Johnson Space Center, Houston, TX.

Irwin, J. A. 1881. The pathology of sea sickness. *Lancet ii*, 907–909.

James, W. 1882. The sense of dizziness in deaf mutes. *Amer J Otol 4*, 239–254.

Kalman, R. E. 1960. Contributions to the theory of optimal control. *Bol Soc Mat Mexicana 5*, 102–119.

Kalman, R. E. & Bucy, R. S. 1961. New results in linear filtering and prediction theory. *J Basic Eng, Trans ASME, Ser D 83*, 95–108.

Kleinman, D. L., Baron, S. & Levinson, W. H. 1970. An optimal control model of human response. Part I. Theory and validation. *Automatica 6*, 357–369.

Kohler, I. 1965. The formation and transformation of the visual world. *Psychological Issues 3*, 19–165.

Kwakernaak, H. & Sivan, R. 1972. *Linear Optimal Control Systems*, Chapter 5, p. 377–441, Wiley Interscience, New York.

Lansberg, M. P. 1960. *A Primer of Space Medicine*, Elsevier, Amsterdam.

Levy, R. A., Jones, D. R. & Carlson, E. H. 1981. Biofeedback rehabilitation of airsick crew. *Aviat Space & Environ Med*, February, pp. 118–121.

MacKay, D. M. 1973. Visual stability and voluntary eye movements. Handbook of Sensory Physiology, VIII/3: *Central Visual Information*, R. Jung, Ed., p. 307–326.

McClure, J. A., Fregly, A. R., Molina, E. & Graybiel, A. 1971. Response from arousal and thermal sweat areas during motion sickness. Naval Aerospace Medical Research Laboratory, Pensacola NAS, FL. NAMRL-1142.

McFarland, D. J. 1971. *Feedback Mechanisms in Animal Behavior*, Academic Press, London, pp. 141–152.

Melvill Jones, G. 1974. Adaptive neurobiology in space flight. Proceedings of the Skylab Life Sciences Symposium, Vol. 2, NASA TMX-58154.

Money, K. E. 1970. Motion sickness. *Physiological Reviews 50*, 1–39.

Oman, C. M. 1978. A sensory motor conflict model for motion sickness. Workshop III Presentation, Space Motion Sickness Symposium, Nov. 16, 1978, NASA Johnson Space Center, Houston, TX.

Oman, C., Bock, O. & Huang, J. K. 1980. Visually induced self-motion sensation adapts rapidly to left-right visual reversal. *Science 209*, 706–708.

Oman, C. M. & Young, L. R. 1979. Spacelab-1 experiments on motion sickness. Paper 79-222, Annual Meeting, American Astronautical Society, Los Angeles, CA.

Parker, D. E. & Money, K. E. 1978. Vestibular/space motion sickness mechanisms. Appendix I in *Space Motion Sickness*, NASA Johnson Space Center, Houston, TX.

Reason, J. T. 1969. Motion sickness—some theoretical considerations. *Int J Man-Machine Studies 1*, 21–38.

Reason, J. T. 1977. Learning to cope with atypical force environments. *Adult Learning*, M. Howe, Ed., London, Wiley, p. 203–221.

Reason, J. T. 1978. Motion sickness adaptation: a neural mismatch model. *J Royal Soc Med 71*, 819–829.

Reason, J. T. & Brand, J. J. 1975. *Motion Sickness*. Academic Press, London.

Reason, J. T. & Graybiel, A. 1969. Changes in subjective estimates of wellbeing during the onset and remission of motion sickness symptomatology in the slow rotating room. Naval Aerospace Medical Institute, Pensacola, FL. NAMI-1083.

Riedel, S. A. 1980. A comprehensive system model for motion/space sickness—preliminary results. Proc. 14th Annual Conference on Manual Control, MIT.

Schaefer, K. P., Suss, K. J. & Fiebig, E. 1981. Acoustic-Induced Eye Movement *Ann NY Academ Sci 374*, 674–688; also personal communication.

Sperry, R. W. 1950. Neural basis of the spontaneous optokinetic response produced by vision inversion. *J Comp Physiol Psychol 43*, 482–489.

Steele, J. E. 1963. Motion sickness and spatial perception: a theoretical study. Aerospace Medical Laboratory, Wright Patterson AFB, Ohio AMRL-TDR-63-25.

Steele, J. E. 1968. The symptomatology of motion sickness. Proc Fourth Symposium on the Role of the Vestibular Organs in Space Exploration, NASA SP-187.

Stevens, S. S. 1974. Perceptual magnitude and its measurement. Ch. 11 in: *Handbook of Perception*, Volume II: Psychophysical Judgement and Measurement, E. Carterette and M. Freidman, Eds., Academic Press.

Stratton, G. M. 1897. Vision without inversion of the retinal image. *Psych Rev 4*, 341–360, 463–481.

Taub, E., Bacon, R. C. & Berman, A. J. 1965. Acquisition of a trace-conditioned avoidance response after

deafferentation of the responding limb. *J Comp Physiol Psychol 59*, 275–279.

Taub, E., Goldberg, I. A. & Taub, P. 1975. Deafferentation in monkeys: pointing at a target without visual feedback. *Exp Neurol 46*, 178–186.

Testa, C. J. 1969. The Prediction and Evaluation of Simulator Illness Symptomatology, Doctoral Thesis, Engineering, UCLA.

Teuber, H. L. 1960. Perception. Handbook of Physiology, Section 1, *Neurophysiology*, Vol. 3, J. Field, Ed., Am. Physiol. Soc. Washington, D.C., pp. 1595–1668.

Treisman, M. 1977. Motion sickness: an evolutionary hypothesis. *Science 197*, 493–495.

Tyler, D. B. & Bard, P. 1949. Motion sickness. *Physiol Revs. 29*, 311–369.

Uexkull, von, J. 1926. *Theoretische Biologie*, Suhrkamp, pp. 156–161; 300–310.

Wang, S. C. & Borison, H. L. 1950. The vomiting center: a critical experimental analysis. *Arch Neurol Psychiat 63*, 928–941.

Wang, S. C. & Borison, H. L. 1952. A new concept of the organization of the central emetic mechanism: recent studies on the sites of action of apomorphine, copper sulfate, and cardiac glycosides. *Gastroenterology 22*, 1–12.

Wang, S. C. & Chinn, H. I. 1954. Experimental motion sickness in dogs: functional importance of chemoreceptive emetic trigger zone. *Am J Physiology 178*, 111–116.

Wang, S. C. & Chinn, H. I. 1956. Experimental motion sickness in dogs: importance of labyrinth and vestibular cerebellum. *Am J Physiology 185*, 617–623.

Weinstein, S., Sersen, E. A., Fisher, L. & Weisinger, M. Is reafference necessary for visual adaptation? *Perceptual and Motor Skills* (1964), *18*, 641–648.

Witkin, H. A. 1949. Perception of body position and of the position of the visual field. *Psychol Monographs 302*, 1–45.

Wonham, W. M. 1968. On the separation theorem of stochastic control. *SIAM J Control 6*, 312–326.

Wood, C. D. & Graybiel, A. 1968. Evaluation of 16 antimotion sickness drugs under controlled laboratory conditions. NAMI-982.

Young, L. R. 1970. On visual vestibular interaction. Proc. Fifth Symposium on the Role of the Vestibular Organs in Space Exploration, NASA SP-314, p. 205–210.

Zacharias, G. L. 1977. Motion Sensation Dependence on Visual and Vestibular Cues. Ph.D. Thesis, Aeronautics and Astronautics, MIT, Cambridge, MA.