General Disclaimer

One or more of the Following Statements may affect this Document

- This document has been reproduced from the best copy furnished by the organizational source. It is being released in the interest of making available as much information as possible.

- This document may contain data, which exceeds the sheet parameters. It was furnished in this condition by the organizational source and is the best copy available.

- This document may contain tone-on-tone or color graphs, charts and/or pictures, which have been reproduced in black and white.

- This document is paginated as submitted by the original source.

- Portions of this document are not fully legible due to the historical nature of some of the material. However, it is the best reproduction available from the original submission.

Produced by the NASA Center for Aerospace Information (CASI)

(NASA-CR-165415) RESEARCH PRIORITIES AND HISTORY OF ADVANCED COMPOSITE COMPRESSION TESTING (Carnegie-Mellon Univ.) 47 p HC A03/MF A01 CSCL 11D
N83-18854
Unclas
G3/24 08982

NASA Contractor Report 165415

RESEARCH PRIORITIES AND HISTORY OF ADVANCED COMPOSITE COMPRESSION TESTING

by K.J. Baumann

Department of Mechanical Engineering
Carnegie Institute of Technology
Carnegie-Mellon University
Pittsburgh, Pennsylvania

MAR 1983
RECEIVED
NASA STI FACILITY
ACCESS DEPT.

MAR 1983
RECEIVED
NASA STI FACILITY
ACQ BRANCH

prepared for

NASA
National Aeronautics and
Space Administration

Lewis Research Center

Cleveland, Ohio

NASA Grant NSG-3172

1. Report No.	2. Government Accession No.	3. Recipient's Catalog No.
NASA CR 165415		

4. Title and Subtitle	5. Report Date
Research Priorities and History of Advanced Composite Compression Testing	July 1981
	6. Performing Organization Code
7. Author(s)	8. Performing Organization Report No.
K. J. Baumann	SM 79-25B
	10. Work Unit No.
9. Performing Organization Name and Address	
Department of Mechanical Engineering Carnegie-Mellon University Schenley Park Pittsburgh, PA 15213	11. Contract or Grant No. NSG 3172
	13. Type of Report and Period Covered
12. Sponsoring Agency Name and Address	Contractor Report
NASA Lewis Research Center 21000 Brookpark Road Cleveland, Ohio 44135	14. Sponsoring Agency Code

15. Supplementary Notes

NASA Project Monitor: Dr. J. E. Srawley
(216)433-4000

16. Abstract

New priorities for standard compression testing research in advanced laminated fibrous composite materials are presented. A state-of-the-art survey completed in 1979 including history and commentary on industrial test methods is presented. Historically apparent research priorities and consequent (lack of) progress are supporting evidence for newly derived priorities.

ORIGINAL PAGE IS
OF POOR QUALITY

17. Key Words (Suggested by Author(s))	18. Distribution Statement
Composites Research Priorities Compression	Unclassified - Unlimited

19. Security Classif. (of this report)	20. Security Classif. (of this page)	21. No. of Pages	22. Price*
Unclassified	Unclassified	42	

* For sale by the National Technical Information Service, Springfield, Virginia 22161

FOREWORD

Special thanks are due to those people who have helped in supporting this work. To Glenn C. Grimes I am especially grateful for having shared his collection of compression test information. It served as an excellent starting point for the industry survey.

I wish to express thanks to previous authors including Shuart and Herakovich, Hofer and Rao, Jones, J. G. Davis, and Ryder and Black who wrote up much of the groundwork in this area.

To the people of the aerospace community who cooperated in my telephone survey, I am most grateful. I exclude a listing here since some of the information is proprietary and sources could then be deduced. The industry input is critical to the success of our project. I find their enthusiasm in our research most encouraging.

Our sponsor, NASA Lewis Research Center, is thanked for their support of our research.

This report was originally published in March 1980 as internal Carnegie-Mellon University report SM 79-25B.

ORIGINAL PAGE IS
OF POOR QUALITY

TABLE OF CONTENTS

page

SUMMARY i

INTRODUCTION 1

COMPRESSION TEST METHODS - STATE OF THE ART 2
- Solid Cylinders and Blocks 2
- Cylindrical Tube 3
- Sandwich Plates with Edgewise Load 5
- Sandwich Beams in Bending 7
- Coupon Tests 11
  - ASTM D638 13
  - ASTM D695 14
  - ASTM D3410 16
  - Edge-Supported Coupon Test 17
  - Federal Test Standard 406 Method 1021 18
  - Fujimoto 18
  - GDFW 20
  - IITRI 21
  - IITRI Fixture with Modifications 23
  - Lockheed I 25
  - Lockheed II 27
  - NARMCO 303 27
  - NBS 28
  - Northrup Methods 29
  - Sandwich Stabilized Fixture 31
  - TEI Short Column 32

RESULTS AND DISCUSSION OF RESULTS 33
- Research Issues 33
- Research Priorities 35

CONCLUSIONS 37

APPENDIX A 40

REFERENCES 41

SUMMARY

This report contains a 1979 survey of the state-of-the-art of compression testing in advanced fibrous composites. Each of about two dozen test methods and devices is listed with a sketch, synopsis, and comments. References are cited wherever possible. The report therefore is useful in gaining a historical glimpse at composite compression testing up to 1979.

Our survey objectives are twofold. One is to determine and document the state-of-the-art in composite compression testing. Having done this facilitates our second objective; to develop priorities for studying the compressive properties of advanced composites. These priorities are developed and presented based upon critical review of the existing test methods. Our grand objective is to move towards more assuredly reliable structure. It is our intention to perform research quantitatively addresses the issue of integrity of compressively loaded composite laminates. First, however, a philosophical and qualitative look at what's available is necessary. Review of these can be useful in avoiding repitition, and seeing both what not to do as well as what to do.

We conclude that many tests have diverged from the critical objectives. We present our results as priorities for future research based on this survey and upon the designers' desires.

ORIGINAL PAGE IS
OF POOR QUALITY

INTRODUCTION

The determination of laminated fibrous composite material behavior as a consequence of compressive loading has received and continues to receive no small amount of attention from the aerospace and academic research communities. However, an associated expedient standard material test and design method (or family of methodologies) capable of predicting structural response has yet to be developed and accepted in the industry. During 1978 and 1979, a literature survey, regular attendance at ASTM D-30 and E-9 Committee meetings and symposiums and a word-of-mouth survey of aerospace designers and test engineers support this position. This paper presents the more detailed survey results undertaken in support of our position concerning future research priorities.

Our survey shows that most aerospace designers do not use the results of the few existing "standard" compression test methods for design purposes; instead they often use in-house methods. Furthermore, structural integrity in compression-loaded structure is generally demonstrated by full-scale or large subcomponent testing for lack of easier means.

Our goal is to alleviate some of these difficulties through pertinent research. We therefore take a look at the state-of-the-art and the history of compression test methods and their associated research priorities, before setting our own priorities.

We have found that much of the literature and most industry personnel cite generic difficulties in compression testing. It appears that recurring difficulties have historically tended to become key topics or issues of research. We regard many such issues as non-critical and divergent. Therefore

ORIGINAL PAGE IS
OF POOR QUALITY

we regard many state-of-the-art test methods as laboratory curios. Consequently, our research objectives are seen to diverge somewhat from tradition.

COMPRESSION TEST METHODS - STATE-OF-THE-ART

Several previous reviews of compressive property determination (Shuart and Herakovich 1978, Hofer and Rao 1977, Jones 1975, Davis 1975, Ryder and Black 1977) are useful starting points in defining state-of-the-art compression characterization. In addition, we present non-sensitive information obtained through an industry survey undertaken July 1979-December 1979. Sensitive and proprietary information appears in a generic fashion only. For convenience, we adopt and build upon Shuart's and Herakovich's organization of methods by specimen type:

Solid Cylinders or Blocks

Description

Solid cylinder and block specimens (Figure 1) have been used primarily to test unidirectional laminates because other laminate orientations present severe fabrication difficulties. Typically, the specimens have been compressed

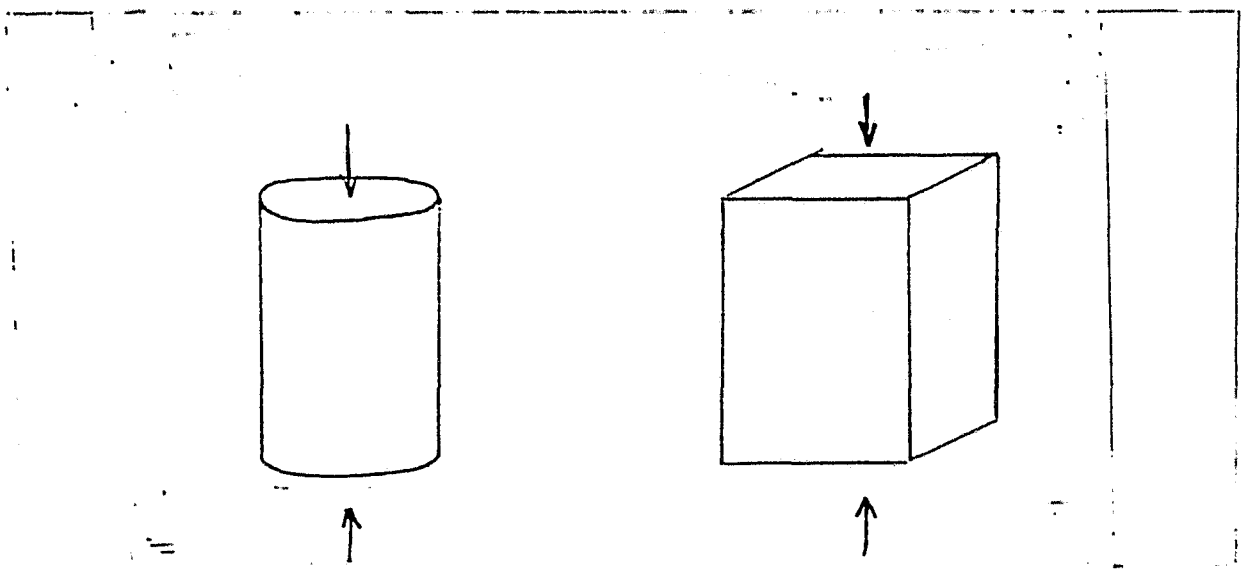

Figure 1. Solid Cylinder and Block Specimens

ORIGINAL PAGE IS
OF POOR QUALITY

between two parallel platens without grips or supports. It is reported (Shuart and Herakovich 1978) that some experimentalists have potted the specimen ends in resin or necked down the specimen centers to force failure away from the specimen ends.

History

These test specimens appear to be a direct carryover from conventional (isotropic) materials testing. Davis (1975) reviews much of the early work which dealt with such unidirectional anisotropic material specimens. These specimens appear to have fallen out of fashion due to their limitation to unidirectional laminates.

Advantages

- The test and specimen are very simple.

Disadvantages

- Limited to unidirectional laminates.
- Failure mode tends to be end brooming.
- Cannot produce all failure modes encountered in angle-ply laminates in service.

Usage

No one in the industry reports using this test any longer.

Cylindrical Tubes

Description

Cylindrical tube specimen testing may be divided into two categories; those using mechanical force loads (Davis 1975, Weller 1977), Figure 2, and those using hydrostatic fluid loading, Figure 3. The later tests are an ASTM standard (see ASTM D2586-68(74)). In the later tests, sections of glass composite cylinders are end-capped and then testing by applying external pressure to the cylinder (Figure 3). The compression strength is then derived by calculation.

ORIGINAL PAGE IS
OF POOR QUALITY

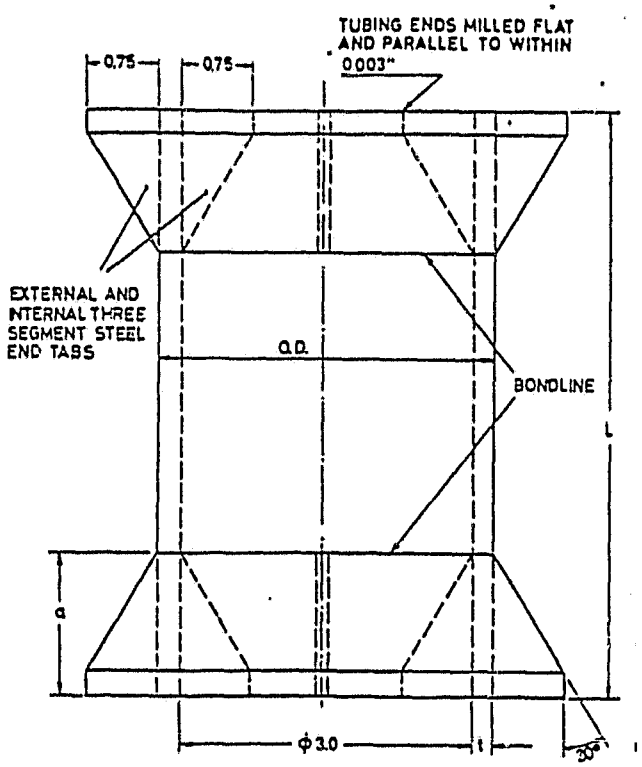

Figure 2. Cylindrical Tube Specimen Mechanically Loaded (adapted from Weller 1977)

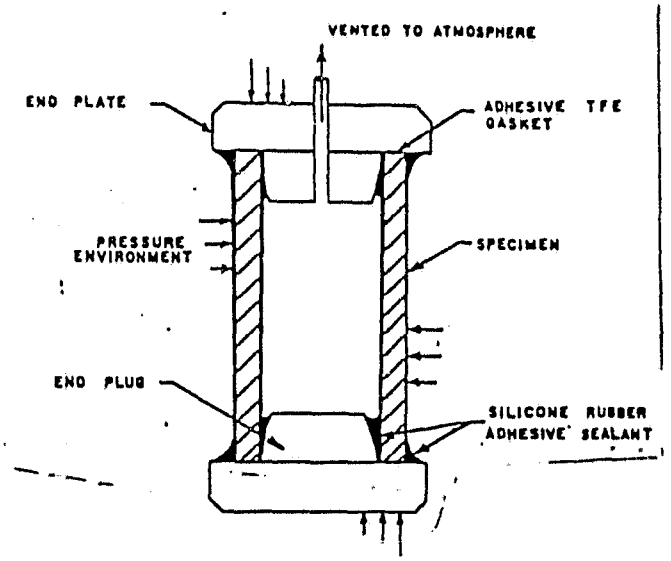

Figure 3. Cylindrical Tube Specimen Using Hydrostatic Fluid Loading (adapted from ASTM D2586, see also Appendix D)

The tests which use mechanical loading typically use a section of composite right circular cylinder having ends potted in resin (Figure 2) so as to avoid failure at the ends. The load is then applied by parallel plattens. Test apparatus has also been developed which can simultaneously apply torsion and compression to the specimen (Davis 1975).

Advantages

- Shuart and Herakovich (1978) report that the data generated in mechanically loaded cylinders is quite acceptable, but don't mention for what purpose. This in essence should say that various potential failure modes are excitable; it appears that they are not in such a test.
- Useful where cylindrical geometry is used in service, such as landing gear and tail booms. Therefore, it's a special purpose test only.

Disadvantages

- Specimens are very expensive and extremely difficult to fabricate. Cylindrical geometry may introduce different behavior than expected in flat plate or other geometry used in service. Therefore, it's not useful in design except for special purposes.
- Ends of specimen must be potted in resin or load otherwise carefully introduced.
- Total load required to fail specimen can get quite large.

Usage

The ASTM standard is used by glass filament wound pipe makers. Other cylindrical tube tests are sometimes used when the service geometry is cylindrical, such as in tail booms and landing gear struts.

Sandwich Plates with Edgewise Load

Description

Figures 4 and 5 show a sandwich plate loaded in edgewise compression. One such test is an ASTM standard (ASTM C364-61(76)) and another is a military standard (MIL STD 401B). Typically, laminated composite skins are bonded to a honeycomb core, placed in a fixture (Figure 4) or end-stabilized (Figure 5) and loaded edgewise as per Figures 4 and 5. Variations in end conditions are evident in the literature (Weller 1977, Suarez, et al. 1972).

History

This method was useful in testing B/al composites, but proved to be problematic for B/E and Gr/E materials. Shuart and Herakovich (1978) cite that it is subject to face wrinkling, local instabilities, and end brooming; only end brooming would seem to be a problem since we would argue face wrinkling to be a possible failure mode in service.

ORIGINAL PAGE IS
OF POOR QUALITY

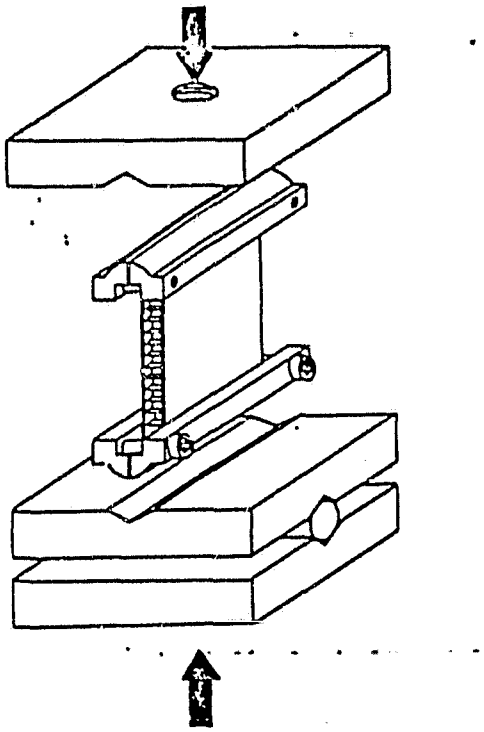

Figure 4. Edge-Loaded Sandwich Plate Specimen and Test Fixture Having Clamp Ends (adapted from Suarez, et al. 1972)

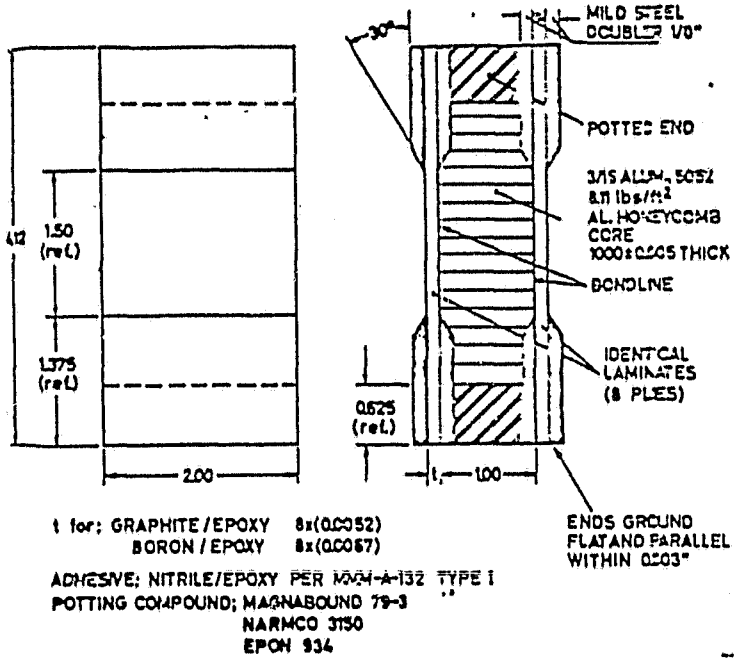

Figure 5. Edge-Loaded Sandwich Plate Specimen for Use Directly in Test Machine (adapted from Weller 1977)

Advantages

- Smaller specimen than sandwich beam in bending.
- Honeycomb core provides side support similar to that in service.
- May sometimes give failure mode mimicking service.

Disadvantages

- Subject to end brooming failure mode.
- Specimen is relatively expensive and time consuming to fabricate compared to coupons.
- For long-term hygrothermal conditioning, specimen presents only one surface of each skin to external environment (may become an advantage for short-term conditioning).

ORIGINAL PAGE IS
OF POOR QUALITY

When Gl/E or B/Al are tested, load can be introduced satisfactorily into both skins. However, when B/E or Gr/E are tested, there is great difficulty introducing load simultaneously into both skins. The test is too sensitive to specimen end tolerances and finishes. In other words, procedure 7.1 of ASTM 364 is difficult to satisfy for many high modulus materials.

Usage

This specimen was used in the early-mid 70's (Suarez, et al. 1972, Shuart and Herakovich 1978, Hofer and Rao 1977) and appears to have gone out of use due to severe problems with end brooming and introducing the load simultaneously into both skins.

Sandwich Beams in Bending

Description

Figure 6 shows a typical sandwich beam compression specimen loaded in four point bending. Typically, a composite skin is bonded to the upper

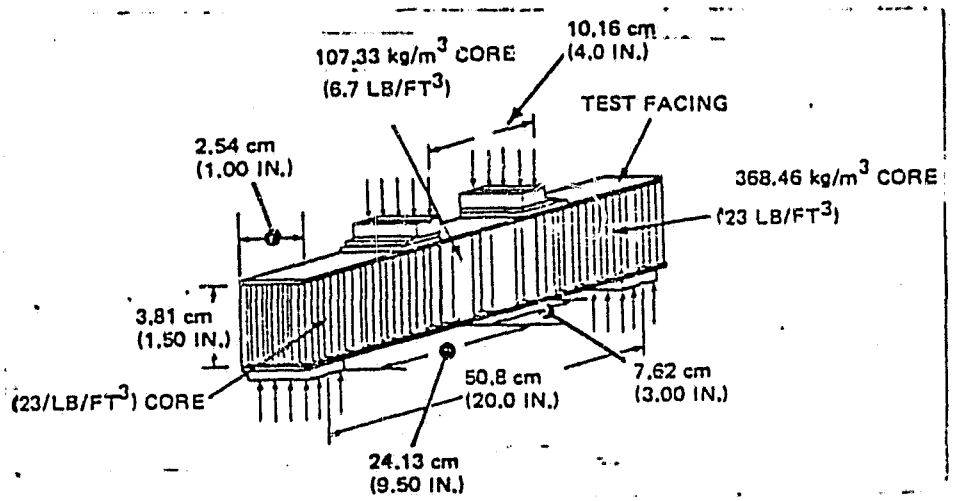

Figure 6. Sandwich Beam Specimen with External Load Pads (adapted from Suarez, et al. 1972)

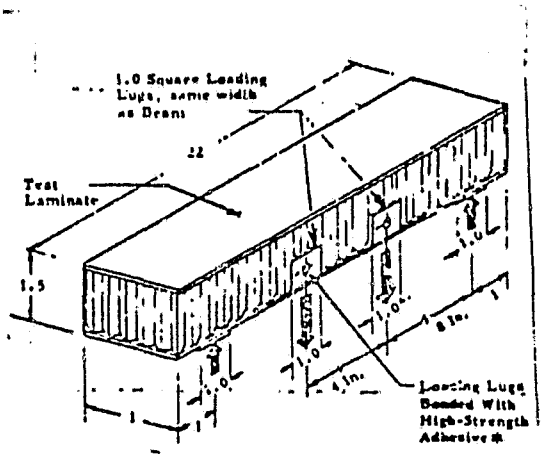

Figure 7. Sandwich Beam Specimen with Internal Load Pads (adapted from Advanced Composites Design Guide)

ORIGINAL PAGE IS
OF POOR QUALITY

surface of a honeycomb core, and a metal skin bonded to the lower surface, so as to prevent failure in the lower skin.

The bending moment produced in the center of the beam is typically assumed to be equivalent to a couple loading the upper skin in compression and lower skin in tension. It is usually assumed that compressive strain is constant through the composite skin's thickness since skin thickness is small compared to the height of the beam.

The honeycomb core is typically aluminum, with a lower density, hence softer, core being used in the center where damage will occur. Pads are used in the four areas of load introduction and may be bonded to the outside of the beam (Figure 6) or fabricated inside the beam (Figure 7) replacing some of the honeycomb core.

One major variation to these large (typically 22 inches long) sandwich beams is reportedly under study but is currently full of problems. It consists of unidirectional Gl/E sandwiched between Gr/E, and is only about 5 inches long (see "Coupon Specimens" GDFW). It is aimed at being a cheap, quick screening test rather than a material property test.

History

Sandwich beam compression testing was developed by aerospace designers who recognized that coupon testing wasn't producing the support conditions and failure modes encountered in service. Many aerospace applications of composites required use of composite skins on honeycomb core; the test was derived from such service geometry. The specimen's history has been largely influenced by developments aimed at solving its difficulties. Such efforts include desire to force failure in the center section rather than where load is applied and to minimize the effect of the honeycomb core on the test.

ORIGINAL PAGE IS
OF POOR QUALITY

An aerospace designer recently commented that the Design Guide spec was developed primarily for B/E and therefore doesn't work properly for Gr/E.

Most recently, Shuart and Herakovich (1978) have undertaken to study the effects which the core may have on the test, by means of analysis and test. The authors comment on many previous sandwich beam efforts in the literature. The authors impose boundary conditions on their computer model which leave some core behavior questions unaddressed. Eisenmann of GDFW reports (personal communication) that the effects of the epoxy glue used between the core and the skin have been studied and isolated experimentally.

Advantage

Sandwich beam compression testing is liked by designers because

- The failure modes are similar to those anticipated in service, especially where structural laminates are used on honeycomb cores. This is a distinctive feature and contrasts with all other tests.
- The test is highly repeatable.
- With reasonable care, failure occurs in midspan rather than at end conditions, hence many of the problems (gripping, etc.) of coupon testing are avoided.
- Compression load is applied to the laminate with a great deal of leverage, hence test machine load capacity isn't a problem.
- One laminate face is readily available for instrumentation.
- Column buckling is generally not a concern as it is in coupon testing, since the honeycomb core provides lateral stability on one side.

ORIGINAL PAGE IS
OF POOR QUALITY

Disadvantages

Sandwich beam compression testing is disliked by designers because:

- It is very expensive. The specimens are generally more than 2 feet long and require considerable labor, material, and care during fabrication. Furthermore, this means fabrication of sandwich beams is excessively time consuming. The built-up specimens require multiple fabrication steps including laminating face sheets, cutting of honeycomb cores, fabricating load introduction pads, bonding of skins to core, and trimming. As a result, a batch of prepregs may go into production of structure before the material tests are run.
- Hygrothermal environments are difficult to introduce and control in such large specimens. The environmental chamber can become quite unwieldy.
- The assumption that the moment is resolved into a couple carried by the upper and lower skins may introduce significant inaccuracies. For example, it has been reported that the epoxy glue between the core and laminated skin may carry a significant percentage of the load (personal communication with Eisenmann), making test results non-conservative. This phenomenon results from a buildup of liquid glue at the intersection of the core with the skin due to surface tension. A meniscus is formed having a repeating hexagonal shape. GDFW has isolated it and measured its stiffness.
- The use of a metal bottom skin, or even a composite bottom skin, raises the question of where is the neutral axis at any given load level. Shuart and Herakobich (1978) calculate <u>one</u> location, off-center, using simple elasticity assumptions.

ORIGINAL PAGE IS
OF POOR QUALITY

- As with any other test, there are questions of edge effects and volume effects.
- Core may influence Poisson's ratio, modulus, and other measurements (Shuart and Herakovich 1978).

Usage

This test method is used extensively in the aerospace industry to obtain compressive properties for design purposes in spite of its many disadvantages.

Coupon Tests - Definition

All of what we'll call "coupon" tests for compressive properties commonly employ relatively small, simple, always flat (planar) specimens (see Figure 8) cut from flat laminates. By our definition, the coupon specimen is never built up or bonded to substructure or core in its active length, although end tabs may be bonded on. As such, previously listed specimens (sandwich beams, cylindrical tubes, sandwich plates, solid cylinders or blocks) are not called "coupons." Coupon tests may vary in several respects (see Figure 8) including:

- specimen shape - dogbone or rectangular
- specimen dimensions - length, width, thickness
- end tabs or potted ends may or may not be used to introduce loads, tab taper may vary from gradual to absent
- support conditions-specimen ends may vary anywhere from built-in to pinned, side supports may be absent or fully or partially supported on both sides, specimen edges may or may not be supported.

These many test variables (Figure 8) and their consequent effects on "compression properties" are viewed as the major reason for the proliferation

ORIGINAL PAGE IS
OF POOR QUALITY

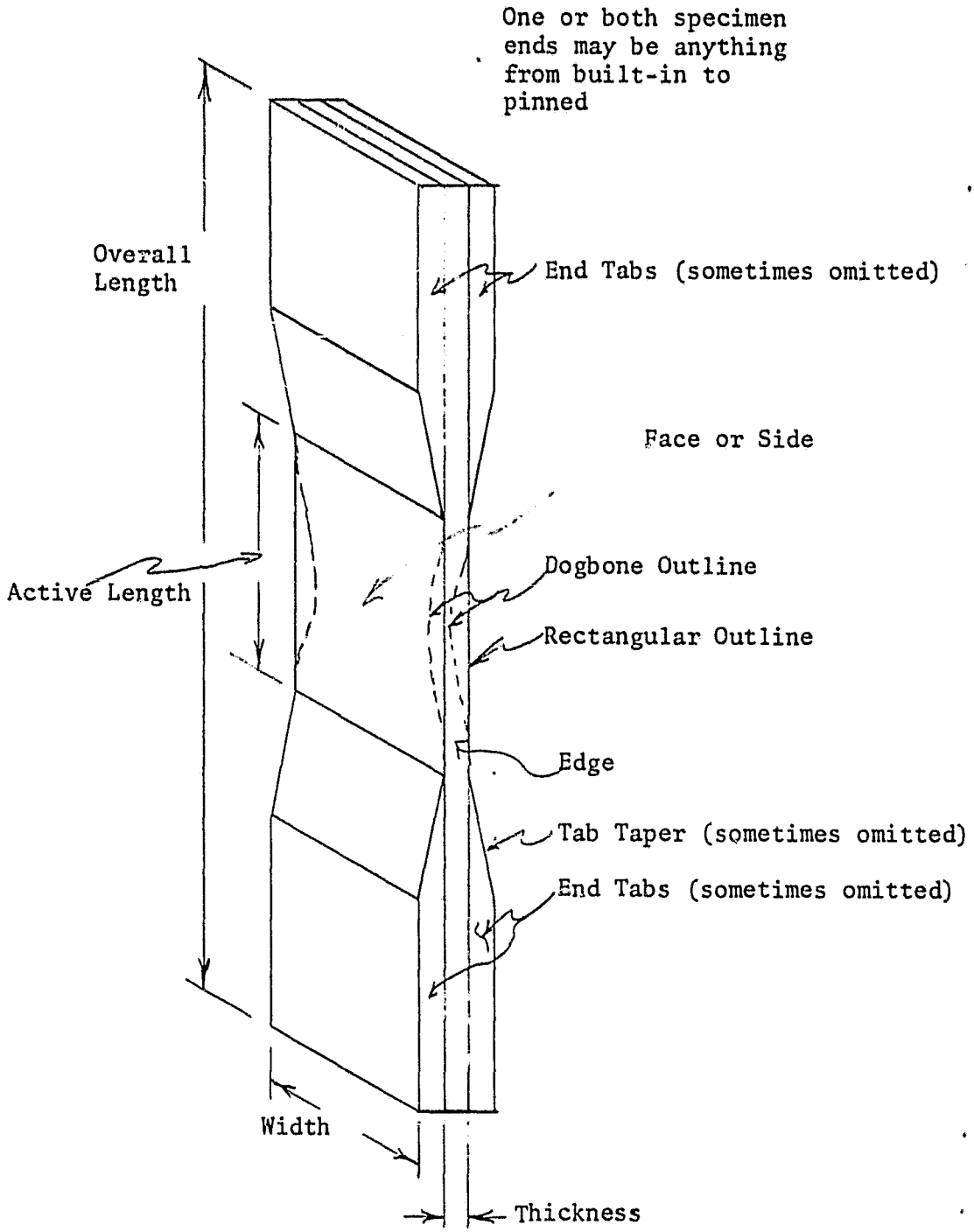

Figure 8. Coupon Specimen Dimensions and Nomenclature

ORIGINAL PAGE IS
OF POOR QUALITY

of so many different coupon tests. Each coupon test may be viewed as a particular combination of the above testing variables. The following discussion summarizes each coupon test. For convenience, the following coupon tests are listed alphabetically:

ASTM D638

Although ASTM D638 is a standard tensile test method, it is included here because specimens of its type (Figure 9) are occasionally chosen for designing dogbone compression test coupons. In fact, such coupons were used by a participant in the recent ASTM D30 round robin compressive test (Appendix A). A detailed description of the dogbone-shaped specimen and test method is available in ASTM D638. The specimen sides and edges were unsupported during the compression test (Appendix A).

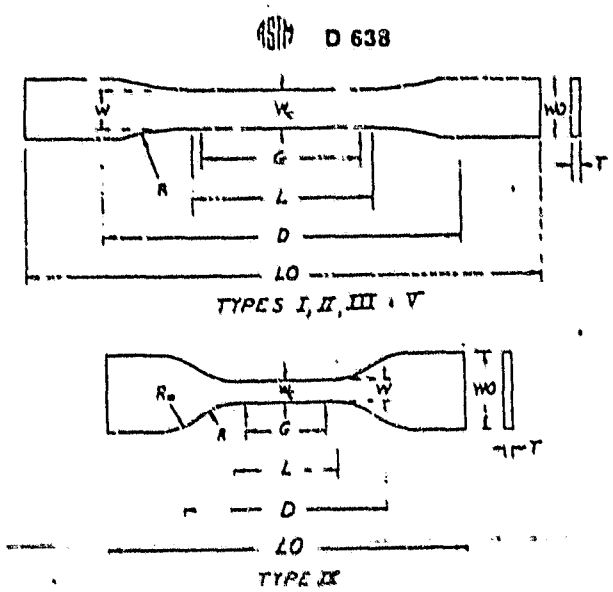

Figure 9. ASTM D638 Dogbone Coupon
(adapted from ASTM)

ORIGINAL PAGE IS
OF POOR QUALITY

Advantages

- Tensile coupon same as compression.
- No need to fabricate sandwich beams.

Disadvantages

- Coupon and grips originally designed to perform tensile tests; whether the same design is practicable under compression, for all likely damage modes, is not easily established.
- Dogbone-shaped coupon more difficult to fabricate than straight-sided coupon.

ASTM D695

ASTM D695 uses a dogbone untabbed coupon supported between plates having periodic line load contact (see Figure 10):

ASTM D695 was adopted by ASTM committee D20 in 1969 for characterizing rigid plastics. It was not intended for use in testing highly anisotropic, high modulus composites. Instead it was developed for homogeneous, and what are generally thought of as isotropic materials.

This test was selected by two participants in the recent ASTM D30 round robin compression test (Appendix A). Also, some prepreggers and fiber producers report using it.

Advantages

- No end tabs.
- Well documented standard.

Disadvantages

- Failures tend to initiate at coupon ends, since test was not designed for anisotropic composites.
- Side supports do not clearly mimic service.

ORIGINAL PAGE IS
OF POOR QUALITY

ASTM D 695

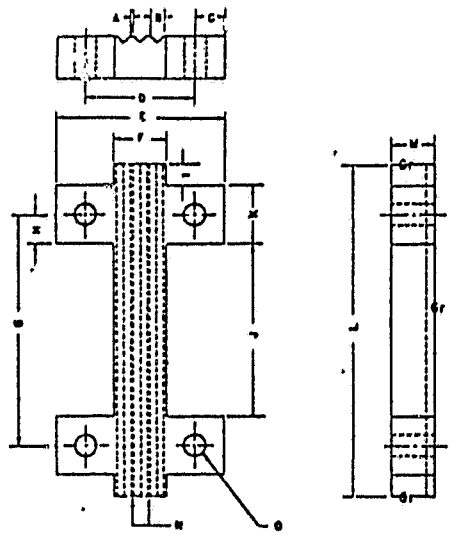

LETTER	METRIC SYSTEM	BRITISH SYSTEM
A	4.0 mm	0.156 in.
B	3.18	.125
C	6.35	.250
D	23.8	.9375
E	36.5	1.4375
F	11.1	.4375
G	50.8	2.00
H	6.35	.250
I	4.76	.1875
J	38.1	1.500
K	12.7	.500
L	73.0	2.875
M	9.53	.375
N	3.58	.141
O	4.76 d.	.1875 d.

NOTE 1—Cold rolled steel.
NOTE 2—Furnished four steel machine screws and nuts, round head, slotted, length 31.75 mm (1¼ in.).
NOTE 3—Grind surfaces denoted "Gr."

Support Jig, Details.

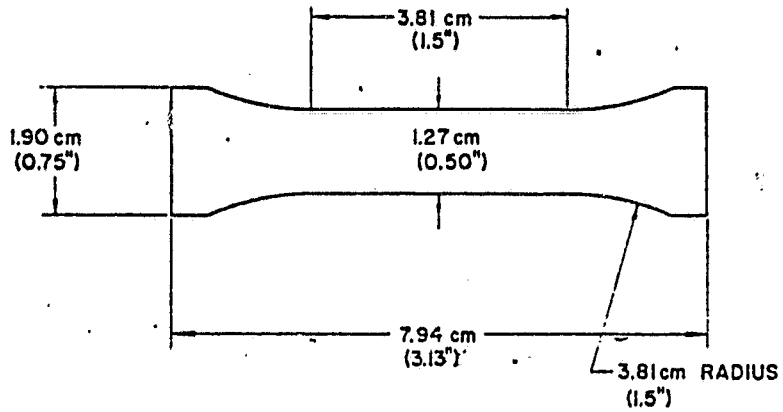

Compression Test Specimen for Materials Less than 3.2 mm Thick.

Figure 10. ASTM D695 Dogbone Coupon and Test Jig (adapted from ASTM)

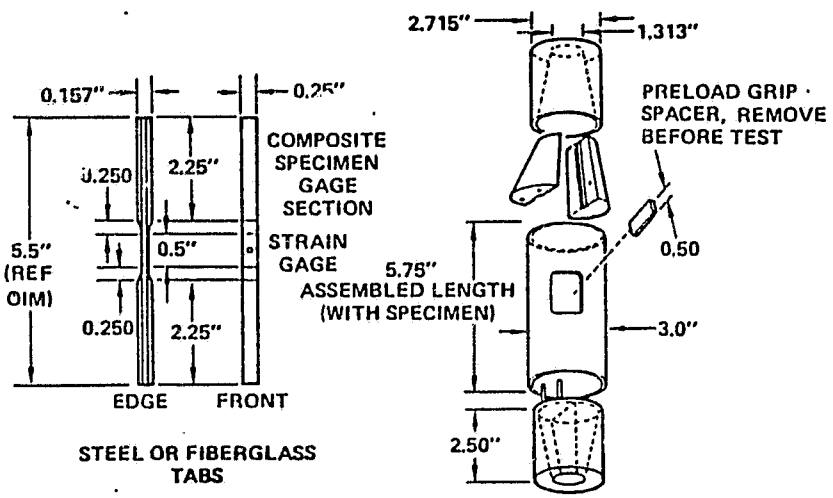

Figure 11. ASTM D3410 (Celanese) Jig and Specimen (adapted from Grimes and Adams 1978)

ORIGINAL PAGE IS
OF POOR QUALITY

ASTM D3410 ("Celanese Test")

The "Celanese' or ASTM D3410 test is presently the only ASTM standard for compression testing of composites (Figure 11). It is often referred to as the "Celanese" test because it was developed by Celanese Research Company. The specimen is rather long and slender (Figure 11), being only 1/4" wide and 5" long, and having an active length of 0.5 inch. The specimen is tabbed on the ends and fits into split grips having conical outer shapes. The conical grips fit into matching conical voids cut into cylindrical sleeves which in turn ride inside of a cylinder for guidance and alignment. An access port is cut in the cylinder for instrumentation purposes (Figure 11). The "Celanese" fixture was reportedly (Shuart and Herakobich 1978) developed and introduced in 1972 by Celanese. ASTM adopted it as a standard in 1975. Few of the industry people we recently surveyed report using the test, and then only for 0° or 90° laminates.

Advantages

- No need to fabricate sandwich beams.
- Standard cookbook test, well documented.

Disadvantages

- Coupon ends must be tabbed with Gl/E or other relatively soft material.
- Due to small specimen size, edge, and other effects, it is reported (personal communications with Grimes) that it was useful only for testing 0° laminates or 90° laminates.
- Specimen slippage, buckling, and cylinder wall friction are reported (Hofer and Rao 1977) as problems. In particular,

> "...the Celanese fixture grips did not seat properly on a cone-to-cone surface contact arrangement. Instead, contact occurred along a pair of lines on opposite sides of the specimens at each end of the specimen. This unstable condition caused the seat grips at each end of the specimens to shift laterally relative to

ORIGINAL PAGE IS
OF POOR QUALITY

each other. Inturn, the seat grips then contacted the enveloping cylinder, thus promoting the conditions necessary for high frictional stresses that resulted in misleadingly high apparent stiffness."

Edge-Supported Coupon Test

The author recalls seeing a test description in the literature having supported edges something like Figure 12, but was unable to locate the source in time for this publication. A similar test using an anti-buckling guide (Figure 13) is reported by Rosenfeld and Huang (1978). This test appears to provide face support near the specimen edges (Figure 13).

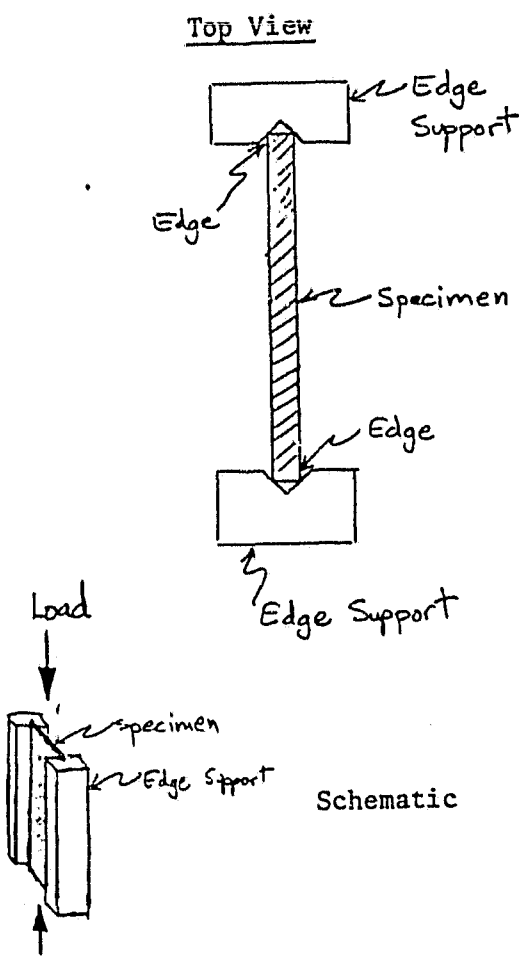

Figure 12. Edge-supported Coupon

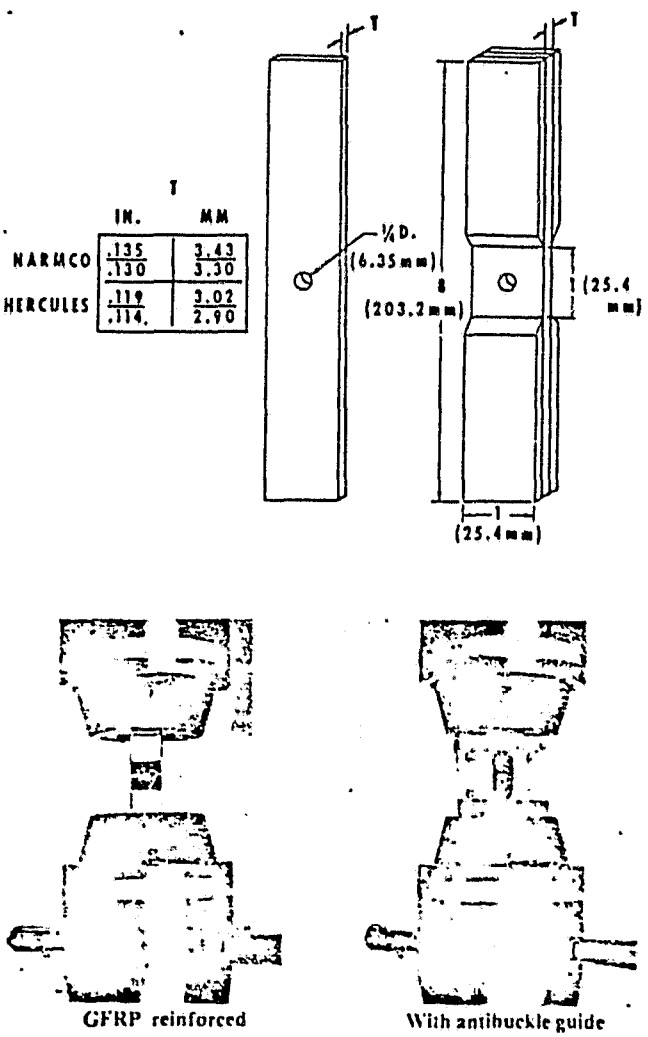

Figure 13. Anti-buckle Guided Coupon and Jig (adapted from Rosenfeld and Huang 1978)

ORIGINAL PAGE IS
OF POOR QUALITY

Federal Test Standard 406 Method 1021

Hofer and Rao (1977) report that Federal Test Standard 406 Method 1021 used a stabilizing jig to support the specimen; however their figure (d) appears to be in error. They add that like ASTM D695, the method "introduced friction forces which frequently resulted in misleadingly high modulii." Rockwell International Corporation Specification HB0130-102 is mentioned to be derived from FTS406 Method 1021, so we include Figure 14 as being appropriate. These methods appear to be essentially the same as ASTM D695 (see previous section "Coupons, ASTM D695").

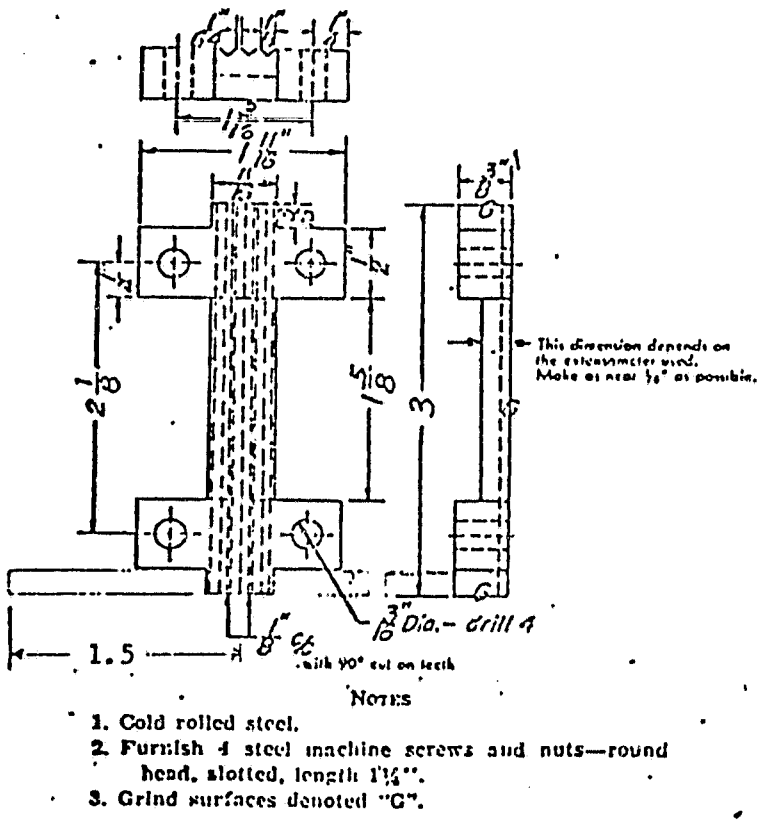

Figure 14. Rockwell Test Jig Drawing from Specification HB0130-102 (adapted from Rockwell 1975)

Fujimoto

The "Fujimoto" specimen, our choice for lack of a name, has been developed by Fujimoto of McDonnell Douglas St. Louis Division. It is used to study

ORIGINAL PAGE IS
OF POOR QUALITY

interaction between interlaminar shear stress and compressive properties in flawed laminates. Currently, additional work is proceeding at St. Louis using this test, with Ray Bohlman now active on a Navy contract administered by Mr. Somoroff. A detailed description of the Fujimoto test is proprietary and has not yet been obtained. In general, it is thought to load the specimen as per Figure 15.

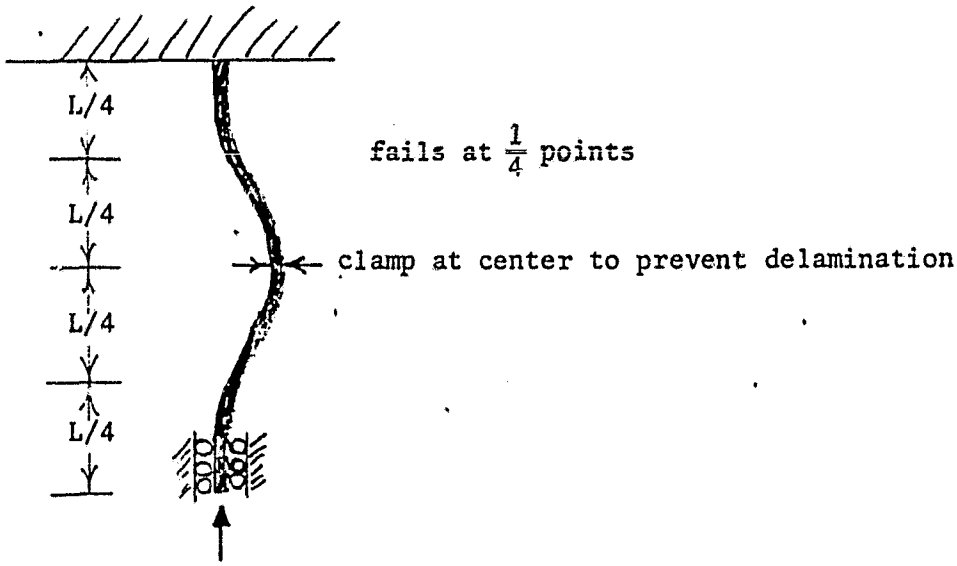

Figure 15. "Fujimoto" Specimen Loading

Advantages

- Demonstrates interaction of interlaminar shearing loads with compressive loads.

Disadvantages

- Results will be difficult to analyze or superpose because material characterization excited by each load alone is not well understood (state-of-the-art-survey by Baumann and Swedlow 1979). Nonlinearities are anticipated.

ORIGINAL PAGE IS
OF POOR QUALITY

- Test is in infancy and proprietary.

GDFW

GDFW (General Dynamics Fort Worth) is currently developing a test which is sort of a blend of a coupon and a sandwich beam (Figure 16). We call it GDFW for lack of a printable name other than "monster." Gr/E laminates are fabricated with unidirectional Gl/E as a center sandwich. Holes are drilled in the center of the Gl/E, and the coupon is loaded in 4-point bending like a sandwich beam. The bottom (tensile) Gr/E skin has more 0° plies than the top (compressive) skin so it doesn't fail first. Nylon is used between the Gl/E and Gr/E to make the skin less sensitive to the holes.

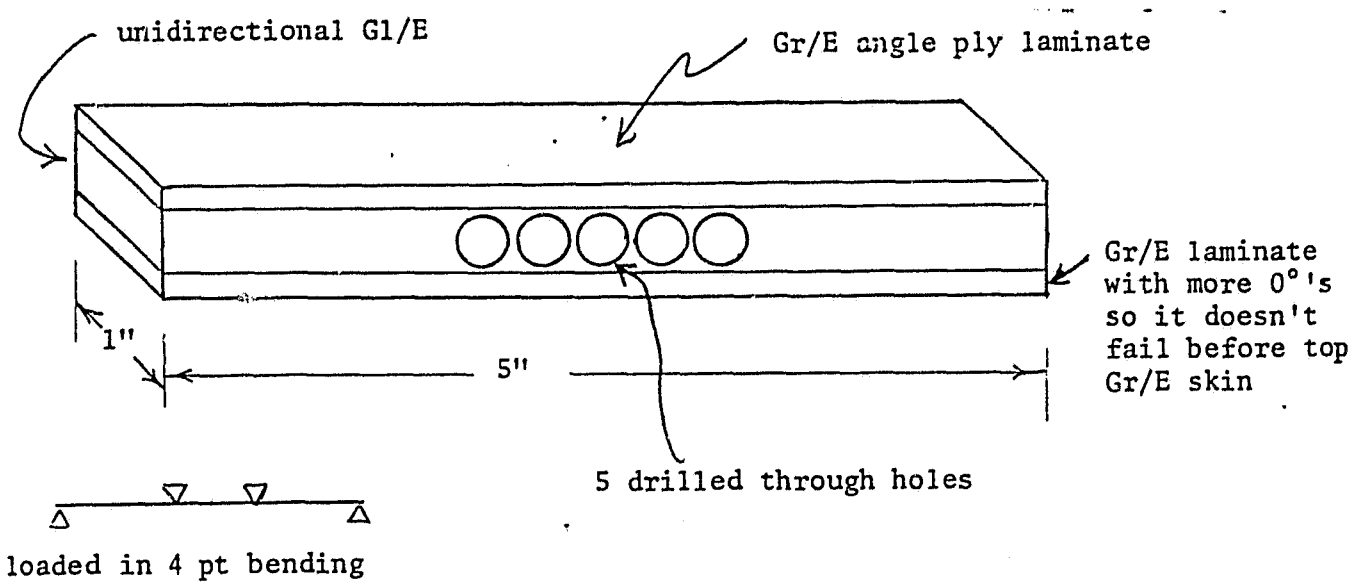

Figure 16. GDFW Development Specimen

The test promises to be quicker and cheaper than sandwich beams for static and fatigue compressive characterization. However, many difficulties have been reported in developing the specimen (personal communications with Eisenmann and Wilkins). GDFW is the only agency known to the author working on such a specimen.

ORIGINAL PAGE IS
OF POOR QUALITY

Advantages

- Small, cheap, quickly fabricated specimen.
- Similar loading to sandwich beam.

Disadvantages

- Test is in infancy.
- Many difficulties have been encountered including sensitivity to drilled holes.
- Bottom skin has more 0° plies, and center is Gl/E with holes, hence there is some difficulty regarding resolution of bending loads into desired compressive loading of skin.

IITRI

The IITRI (Illinois Institute of Technology Research Institute) test fixture and specimen are shown in Figures 17a,b,c. Note that split wedge grips mate into rigid blocks having suitable receptacles. The blocks receive compressive load directly and have two large mating pins and holes for guidance and alignment purposes. Specimen dimensional constraints are shown in Figure 17c. The specimen is end-tabbed and has a 0.5 inch active length.

The IITRI fixture was developed at Illinois Institute of Technology Research Institute to overcome difficulties encountered with ASTM D3410 ("Celanese") and other test methods (Hofer and Rao 1977). The fixture is currently available from IITRI for between $5,000 and $10,000.

The IITRI method is the most popular coupon test having unsupported sides. Many agencies report using it for material screening purposes, however not for design purposes. Some companies have modified this test (see next section in this report).

ORIGINAL PAGE IS
OF POOR QUALITY

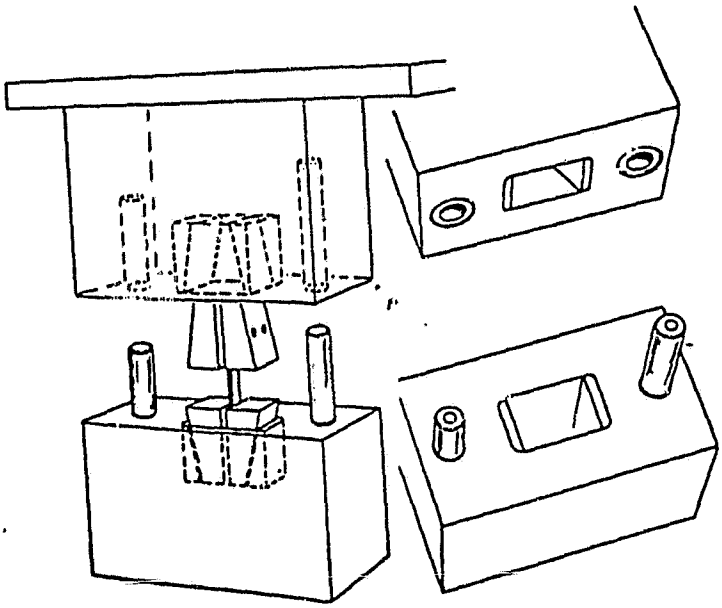

Figure 17a. IITRI Test Fixture
(adapted from Hofer and Rao 1977)

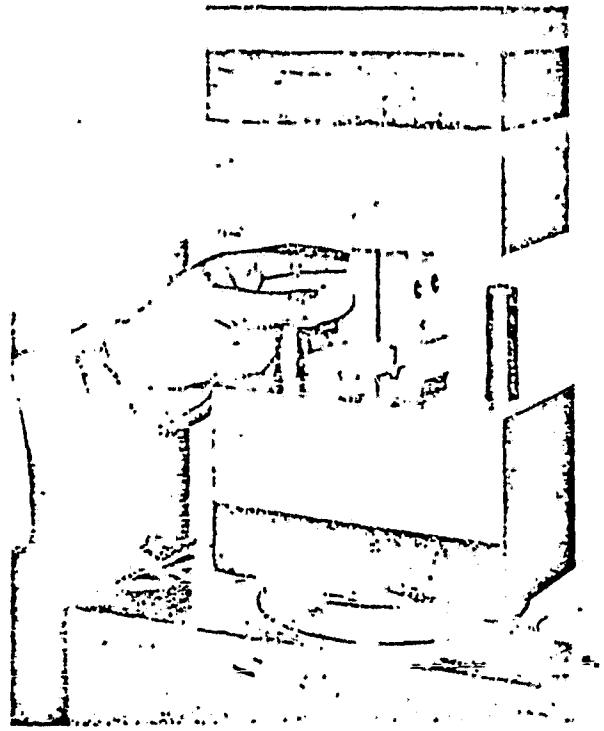

Figure 17b. IITRI Fixture (adapted from
Hofer and Rao 1977)

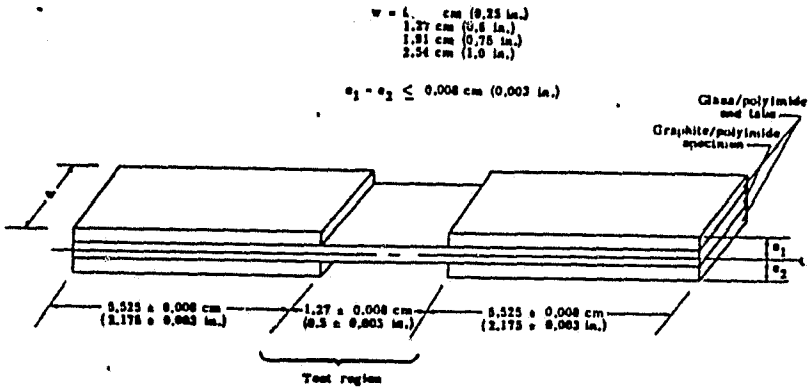

Figure 17c. IITRI Coupon
(adapted from Raju, et al. 1979)

ORIGINAL PAGE IS
OF POOR QUALITY

Advantages

- Overcomes frictional problems of ASTM D3410 ("Celanese") fixture which lead to overestimates of compressive modulus.
- Readily available.
- Flat, straight-sided specimen.
- Tab slippage prevented.
- Lateral alignment assured by 2 pins.

Disadvantages

- Dimensional constraints, including active length of specimen (0.5 inch) may lead to damage modes not encountered in service.
- Fixture does not use side supports.

IITRI Fixture with Modifications

Several modified IITRI fixtures have been developed by organizations including Grumman, International Rockwell California, University of Delaware, and NASA-Langley. The modifications have been made to improve upon what was viewed as deficiencies and limitations in the original IITRI fixture. Accommodations for wider, thinner, thicker, longer, and some side-supported specimens have been made. All fixtures are apparently quite similar looking to the standard IITRI fixture in many respects, so one can refer to IITRI fixture (previous section in this report) for a general description.

Active coupon length is 2" in one Rockwell modification. Specimen thickness can be 1/4" to 1/2" in a University of Delaware fixture. Another modification is in progress there. The Grumman modifications allow longer active length (Figure 18a and b) and reportedly some side support can be used for longer specimens (personal communication with Suarez).
NASA Langley has developed elevated temperature testing capabilities (Raju et al. 1979).

ORIGINAL PAGE IS
OF POOR QUALITY

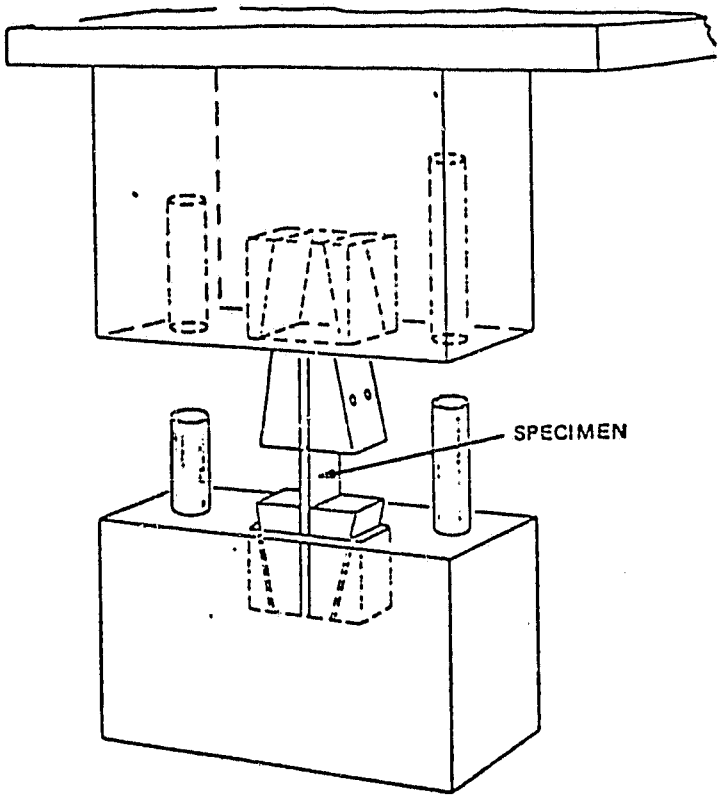

Figure 18a. Grumman-modified IITRI Fixture (adapted from Suarez)

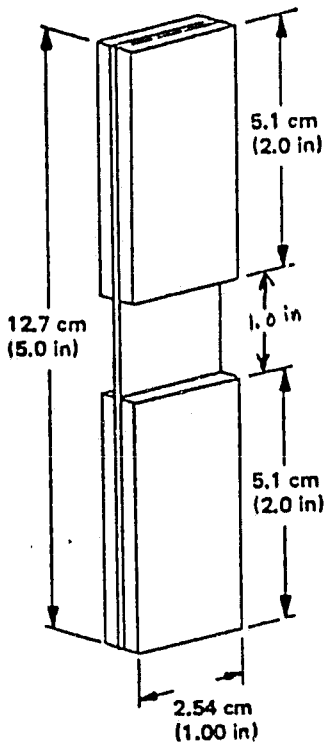

Figure 18b. Grumman-modified IITRI Coupon (adapted from Suarez)

ORIGINAL PAGE IS
OF POOR QUALITY

No additional figures have been obtained.

Advantages

- Similar to IITRI, plus additional capability to test thinner, thicker, wider, longer, and some side-supported laminates at elevated temperatures.

Disadvantages

- Limited variety of damage modes and support conditions.
- IITRI personnel argue that at least one of these tests is invalid due to improper specimen dimensions (comment by Daniels at D30 Dearborne Meeting, October 1979).
- Small active coupon length in some fixtures.

Lockheed I

The Lockheed I fixture and specimen are shown in Figure 19a,b,c. A straight-sided coupon with one tabbed end is used and full, continous teflon-coated steel side supports are employed. A more complete description is available in the literature (Ryder and Black 1977).

The Lockheed I method was reportedly (Ryder and Black 1977) developed to test ultimate compressive strength of large gauge length composite coupons. It was inspired by ASTM D695 and developed to avoid end brooming, splitting, and column buckling difficulties encountered with D695 tests performed on composites.

The Lockheed I fixture is no longer used in industry, including Lockheed. However, NASA Langley is researching this test method (personal communication with Dr. R. Clark). Clark claims it gives inconsistent results for 0° unidirectional Gr/E; Lockheed (personal communication with Lauritis) reports it is not good for 0° unidirectional Gr/E. It appears that increased communications

ORIGINAL PAGE IS
OF POOR QUALITY

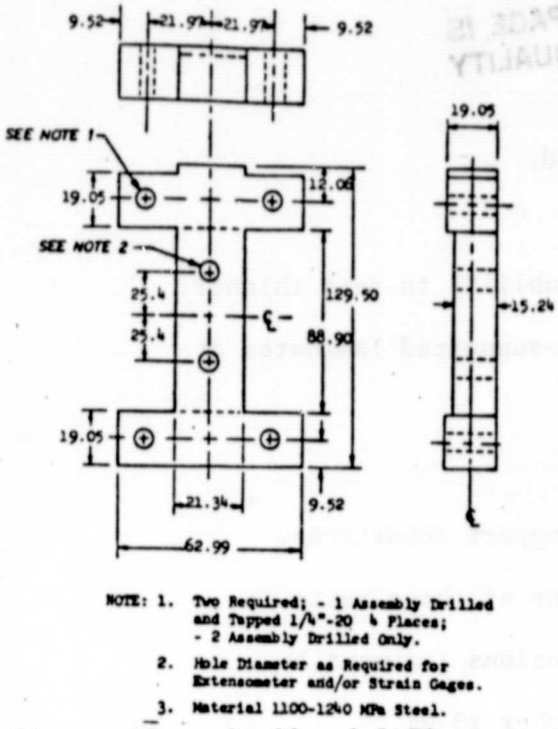

Figure 19a. Lockheed I Fixture

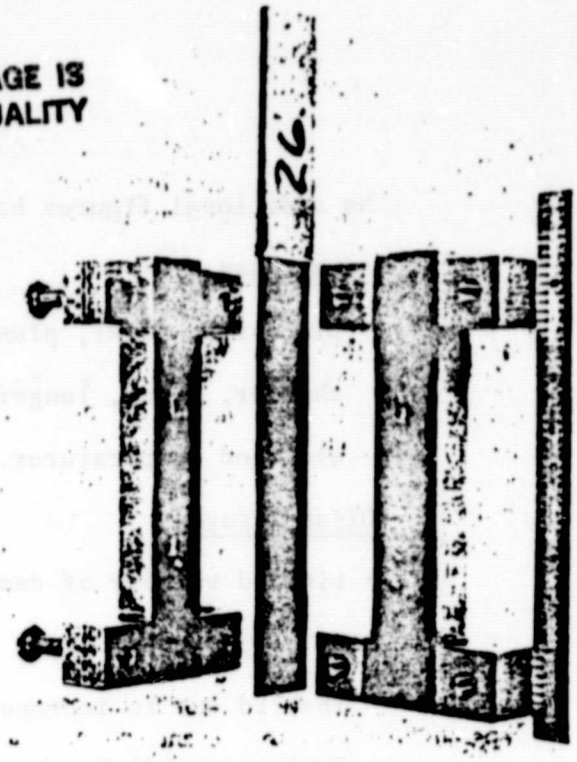

Figure 19b. Lockheed I Fixture and Coupon, Disassembled

(Figures adapted from Ryder and Black 1977)

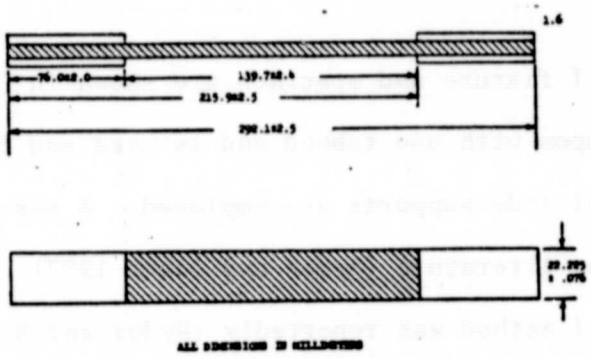

Figure 19c. Lockheed I Coupon (one end is removed)

between NASA Langley and Lockheed concerning such matters could have accelerated NASA Langley's research.

Advantages

- General advantages similar to other coupon tests.
- Improvement upon D695.
- Relatively cheap and quick.

ORIGINAL PAGE IS
OF POOR QUALITY

Disadvantages

- Inconsistent results for 0° laminates.
- Ryder and Black 1977 report failure modes somewhat sensitive to specimen end.
- Friction between coupon and side supports may affect modulus despite use of teflon.
- Support conditions, hence, damage modes may not mimic service.

Lockheed II

The Lockheed II fixture is being developed with the idea of relating material behavior in compression to Timoshenko instability analysis. No details or references are available.

NARMCO 303

The NARMCO 303 test fixture is shown in Figure 20. The early straight-sided coupon is clamped on its ends and unsupported on its sides. Hofer and Rao 1977 report that the specimens tend to broom at the ends. Nobody in our industry survey reports using this test.

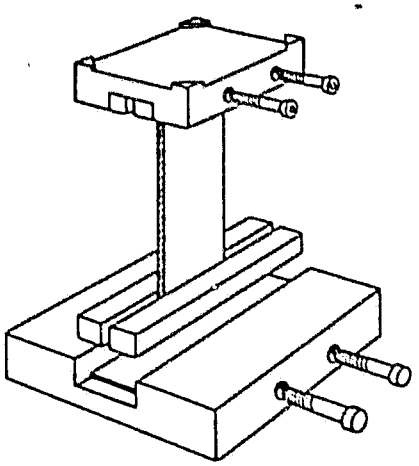

Figure 20. NARMCO Test Method 303 Coupon and Jig (adapted from Hofer and Rao 1977)

ORIGINAL PAGE IS
OF POOR QUALITY

Advantages

- Straight-sided, untabbed coupon.

Disadvantages

- Specimens tend to broom at the ends.
- Complex state of stress exists at insert-specimen interface which leads to local failure (Hofer and Rao 1977).

NBS

The NBS (National Bureau of Standards) test jig is shown in Figures 21a and 21b. Note that the fixture enables a compressive test to be run

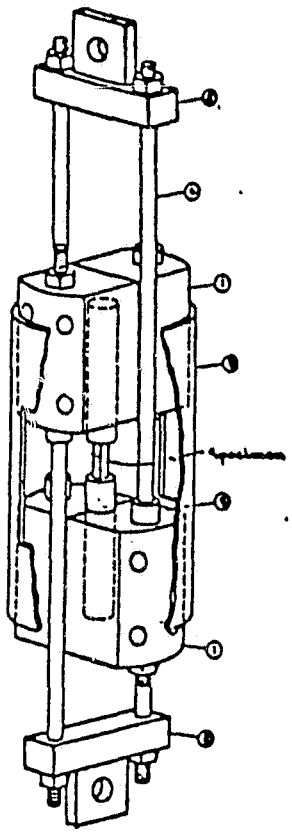

(1) split aluminum blocks, (2) stainless steel yokes, (3) aluminum alignment sleeve, (4) titanium rods, (5) lock-collar.

Figure 21a. NBS Test Jig (adapted from Schramm and Kasen 1977)

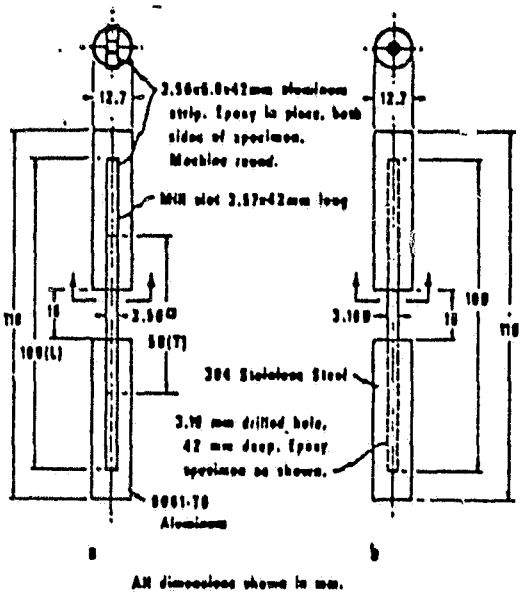

Specimen configurations used in determining static compressive properties of composites at cryogenic temperatures. (a) Square specimen for glass/epoxy, graphite/epoxy, and transverse boron/aluminum and boron/epoxy. (b) Round specimen for longitudinal boron/aluminum and boron/epoxy. (L = Longitudinal, T = Transverse, D = Diameter.)

Figure 21b. NBS Coupon (adapted from Schramm and Kasen 1977)

ORIGINAL PAGE IS
OF POOR QUALITY

in a test machine activated in tension, which may be of some use where test machine crosshead capabilities are limited to tensile mode measurement. The specimens are very slender and are either square or round, depending on material type and fiber orientation. Specimen ends are epoxied into aluminum cylindrical tabs. The device uses an outside collar to guide travel in a manner similar to the Celanese fixture. This is the test method with which NBS has generated cryogenic data (Kasen 1975, Kasen, et al. 1977).

Nobody in our survey except NBS reports using the test.

Advantages

- Can be excited in a test machine running in tension which may be useful for some machines having limited capabilities.
- No need to fabricate sandwich beams.
- Entire jig may be suspended in an environmental chamber with only two tensile rods penetrating the boundary of the chamber.

Disadvantages

- Extreme slenderness of specimens may affect results.
- Coupon ends must be epoxied into fabricated aluminum tabs.

Northrup Methods

A variety of methods in addition to the Celanese method have been used and/or developed at Northrup and several appear to have more than one name:

ATMUR (also "ETL" and "Northrup I-Stone")

The ATMUR fixture (Figures 22a,b,c,d,e) has been developed by a Northrup employee of the same name. Rectangular coupons with end tabs of different sizes for static and fatigue tests are used (Figures 22b,e). Four plates are fastened around the specimen for side-support. The assembled plates

ORIGINAL PAGE IS
OF POOR QUALITY

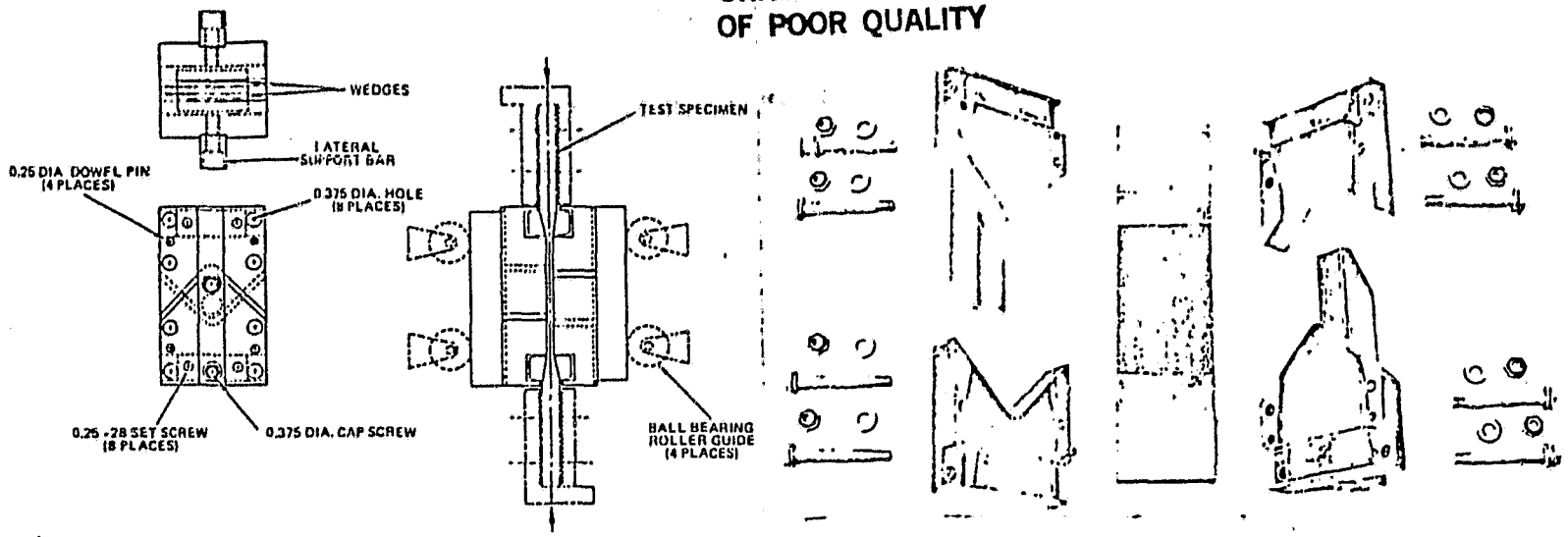

Fatigue and Static

Fatigue

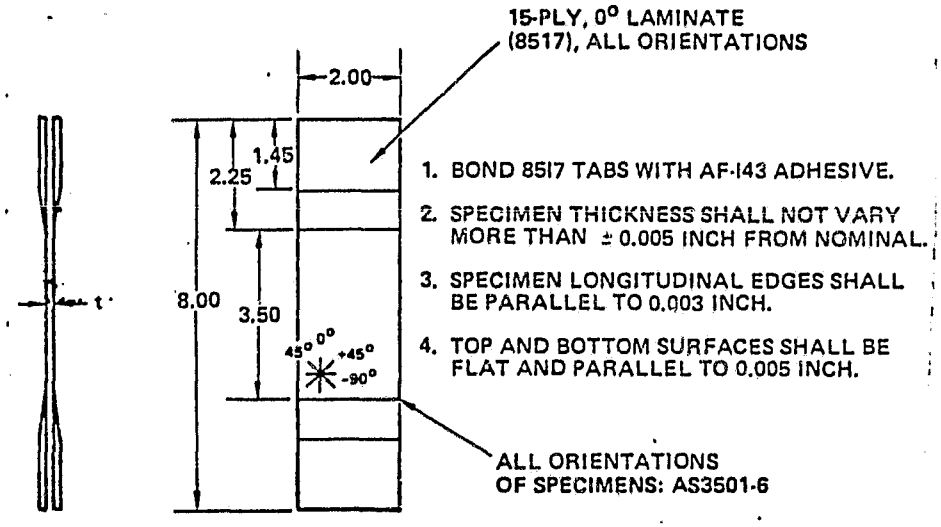

Fatigue

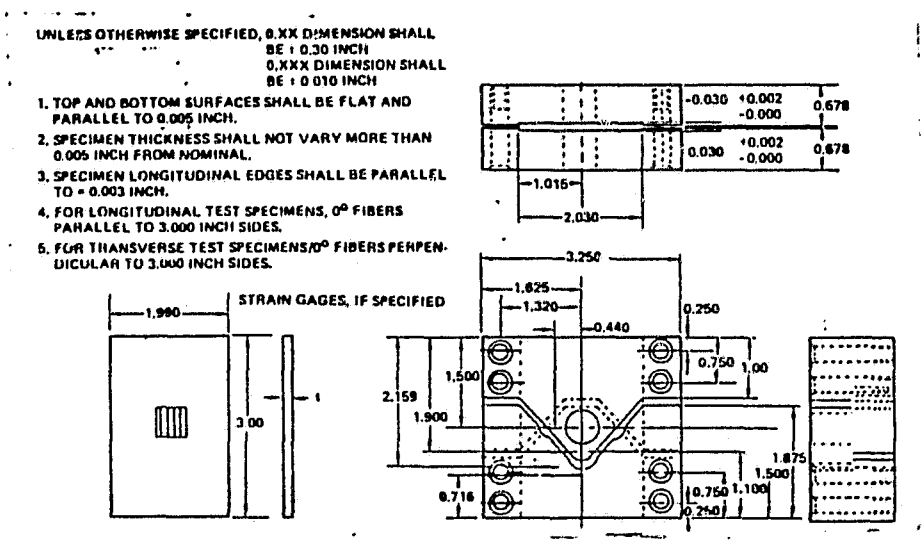

Static

Figure 22. Northrup (ATMUR) Test Jigs and Coupons (figures adapted from Grimes and Adams 1979)

ORIGINAL PAGE IS
OF POOR QUALITY

have chevron-shaped gaps which accommodate compressive strain in the specimen. Slight variations exist for fatigue and static testing. Rollers may be used to support the side plates for fatigue testing. The ATMUR fixture appears to currently be used only within Northrup.

Advantages

- May excite additional damage modes compared to unsupported coupons.
- Used in C-C fatigue testing.

Disadvantages

- Side supports do not clearly mimic service.
- Side supports appear to be difficult to quantify (Figure 22) and control .
- End tabs required.

Northrup II Veretti (also IT58)

This method reportedly (personal communications with Grimes) uses a $\frac{1}{2}$" x $5\frac{1}{2}$" specimen with clamped platens, and is useful for angle plies. No drawings or other details have been obtained.

SWRI (Grimes at Southwest Research Institute)

During the late 1960's Grimes reports having worked on a test using a specimen similar to ASTM D638 lengthened for tabs. It was used for tensile and compression tests and worked for laminates other than unidirectional 0°. Aluminum "squish" plates were used under specimen ends to prevent B and Gr fibers from denting the hardened steel test machine platens. No further details have been obtained.

Sandwich Stabilized Fixture

The Sandwich Stablized test jig is shown in Figure 23 as obtained from Hofer and Rao 1977. Apparently, sandwich core side-support was provided to

ORIGINAL PAGE IS
OF POOR QUALITY

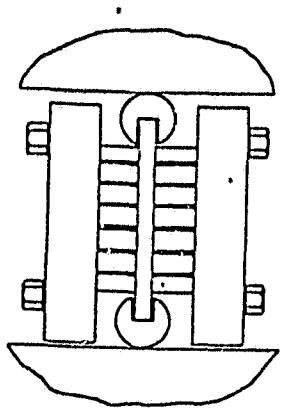

Figure 23. Sandwich-Stabilized Jig and Coupon (adapted from Hofer and Rao 1977)

both sides of the specimen. The coupon ends were apparently bonded into grooved cylinders. No other information on this test has been found.

TEI Short Column

The TEI (Texaco Experiment Inc.) Short Column test is shown in Figure 24, as obtained from Hofer and Rao 1977. The authors report the following:

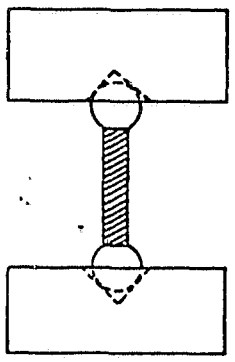

Figure 24. TEI (Texico Experiment Incorporated) Test Jig and Coupon (adapted from Hofer and Rao 1977)

ORIGINAL PAGE IS
OF POOR QUALITY

Disadvantages

- Fabrication method for specimen was reportedly (Hofer and Rao 1977) different from that used in making laminates.
- Limited to unidirectional 0° properties.
- People didn't believe results (they were high).

Advantages

- The test reportedly (personal communication with Grimes) measured about E_{11} = 40 ksi and $\sigma_{ult\ comp}$ = 450 ksi for unidirectional B/E, which has turned out to be pretty believeable.

RESULTS AND DISCUSSION OF RESULTS

Research Issues

In our state-of-the-art compression test survey, a number of issues arise as traditionally popular research topics which have driven test developments. These popular issues, listed in historical sequence, appear to have been:

What are the compressive yield and ultimate properties of this material? At this point, people experienced with isotropic metals applied traditional test methods (solid cylinders and blocks). The results indicated that the tests did not work properly with composites, so other methods were tried (ASTM D638, ASTM D695, TEI, NARMCO 303, Federal Test Standard Method 303). Difficulties with these tests led to new issues:

Can problems with end brooming, splitting, etc., be solved?

Can load alignment problems be solved without sacrificing cycle time and accessibility of specimens in jig? (Celanese fixture addressed these issues.)

ORIGINAL PAGE IS
OF POOR QUALITY

Can gripping problems be solved?

Can friction effects in modulus measurement be eliminated?

Can edge or width effects be avoided? (IITRI fixture addressed these issues.)

Should "true" compressive ultimate strength be sought, or something else? (Sandwich beams, other tests)

Can hygrothermal effects be studied? (NBS, IITRI, and others)

Can the cost of testing be reduced? (IITRI, GDFW)

Can the time lag for specimen fabrication and testing be reduced? (IITRI, GDFW)

Such early issues appear to be evident as driving forces in development of test jigs and in the associated literature. Unfortunately, attention focused upon such issues appears to have caused many divergent choices of miscellaneous test variables which appear to have profound effects upon compressive properties (Appendix A). Consideration of some of these other test variables is viewed as an important issue to be considered in research. We then arrive at new research issues in order of priority.

Shall the test be used for material screening or for design purposes or both? What do designers need out of this test?

How shall excitation, damage, and failure be defined and measured?

What models or tools are available or needed to make the data useful for structural design purposes?*

Should the test measurement reflect different damage modes anticipated in service?

---

*The reader is pointed to Suarez, et al. 1972, for early examples of such models.

Can the test be standardized and yet mimic the multitude of structural geometries encountered in service? If so, how?
How do variables such as side-support conditions, specimen geometry, etc., affect results?
Can the rig eventually be used for cyclic testing at any value of R so that we don't end up comparing apples to oranges without excessive specimen cost and time delay problems?
Can load be introduced without tabs or sandwich beams and still excite desired damage modes?
How can the specimen volume effect be accounted for?

Research Priorities

Sufficient evidence is now available which indicates that advanced fiber reinforced laminated composite compression testing research should address certain priorities if it is to be useful in developing standardized and acceptable tests for the majority of the aerospace industry. In order of importance, they are:

- The test must be useful for design purposes as opposed to only material screening purposes. This implies
  1. that a useful and quantitative link between the test data and structural design must be delineated,
  2. the test excitation and failure modes must mimic those anticipated in service, thus it must facilitate mimicking a reasonable variety of excitations and structural end and side support conditions typically anticipated in service structure. Additionally, the rig must be designed

so as to eventually be useful with cyclic excitation at various values of R. Initially, gripping problems may require only compressive (not tensile) excitations,

3. it should be eventually be proven useful for various popular lamina orientations and materials,
4. the search for "true" compressive ultimate strength is neither required nor logical, rather, the effects of pertinent excitation(s) on damaging material properties is of interest,
5. some quantified idea of the data's trustworthiness should be available through statistical treatment or other suitable means.

- The test must be capable of standardization. This requires that:
  1. a vocabulary must be defined, particularly for excitation, damage, and failure. (Damage, failure, and excitation must be chosen to reflect aerospace needs.),
  2. testing and reporting procedures must be spelled out in detail,
  3. the test must not depend too highly on operator skill or specimen tolerances (repeatable test needed), and
  4. must have reasonable minimum variation in rigs or minimum number in family of rigs for various laminates and various choices of excitation, damage, and failure.

Issues which have plagued and often captivated previous researchers should also be addressed; they are not, however, central to testing itself. Thus the fixtures:

- Must have no gripping or end tab problems.
- Must not have alignment problems.
- Must give useful compressive modulus measurement (avoid friction effects).
- Must be excitable in most standard testing machines.

Desire to eventually broaden the test's capabilities of mimicking service excitations and geometries leads to desire that the test have potential for:

- Studying hygrothermal effects.
- Studying strain rate and other viscoelastic effects.
- Studying size, edge, and volume effects (may require long-term, large data base, many years).

CONCLUSIONS

Our survey of state-of-the-art compression testing of fiber reinforced laminated composites indicates:

- Currently there is no universally accepted compression test for these materials; the state of the art is a proliferation of test fixtures.
- Many research efforts have diverged from structural support conditions and have forced material behavior neither anticipated nor found in service. Such tests are laboratory curios. No suitable modeling links exist between such tests and structural design situations.
- Side-support conditions in coupon testing other than sandwich beams have been <u>either</u> wholly unsupported or supported to some extent on <u>both</u> sides, but never success-

fully supported to any extent on only one side as in a sandwich beam, which mimics service. As a result, straight-sided, untabbed coupons are typically not useful in generating reliable data for design purposes. However, straight-sided coupons are nonetheless cheap and quick to use, consequently they are sometimes used for material screening purposes.

- The tests which are most favored for design purposes (sandwich beams) are unfortunately costly and time consuming; hence designers strongly desire cheaper and quicker methods.
- The bottom line to assure design and material integrity after manufacture in industry is often a full scale test.
- R = -1 and other cyclic excitations and flaws are of great interest to designers in terms of damaging effects on compressive strength.
- In the literature and even sometimes in industry, excitation, failure, and damage associated with compressive loading haven't often been defined with structural design as the objective. In fact, excitation, damage and failure are generally undefined and are often implied to be one and the same thing. Test results are thereby often useless for structural design purposes. The apparent tendencies in setting test design objectives have changed historically and have diverged from important issues. Various problems have captivated researchers and diverged attention from key issues.

Historically test jig development reflects efforts which progressed from traditional metals technology into a diversity of issues. Many historical issues are judged to be of relatively minor importance, and new issues are suggested based upon industry needs and apparent material behavior to date.

Results to date show these materials are sensitive to geometry, end conditions, side support conditions, and moment loads when loaded in compression, however, for general design purposes we cannot now state how sensitive to each. The necessary data appear not to exist.

Our research priorities therefore include some traditional and many new issues and represent a signficant departure from the apparent ordering of traditional issues.

ORIGINAL PAGE IS
OF POOR QUALITY

APPENDIX A

ASTM Committee D-30.05

Compression Test Round Robin

Material	Test Method	Company	Average Strength, ksi	Average Modulus, msi
AS/3501	NBS	NBS	151	16.7
AS/3501	D-638	PPG	147	-
AS/3501	D-695	OCF	119	18.9
AS/3501	D-695	Hexcel	148	18.2
AS/3501	Sandwich Beam	Hexcel	188	17.2
AS/3501	Sandwich	Delaware	204	18.5
	IITRI	Adsit	206	17.9
EGlass/1002	NBS	NBS	84	6.5
EGlass/1002	D-638	PPG	68	-
EGlass/1002	D-695	OCF	62	6.5
EGlass/1002	D-695	Hexcel	96	6.3
EGlass/1002	Sandwich Beam	Hexcel	150	6.8
EGlass/1002	Sandwich Beam	Delaware	127	7.2
EGlass/1002	IITRI	Delaware	140	7.0
		Adsit	145	6.6

Prepared by

R. Byron Pipes
University of Delaware
Newark, DE 19711

ORIGINAL PAGE IS
OF POOR QUALITY

REFERENCES

Advanced Composites Design Guide, Third Edition, January 1973: Vol. I - Design, Vol. II - Analysis, Vol. III - Manufacturing, Vol. IV - Materials, Vol. V - Applications, Revision I, Revision II, Revision III, Air Force Materials Laboratory, Wright-Patterson AFB, Ohio.

Baumann, K. J. and J. L. Swedlow, July 1979, "Research Priorities for Advanced Fibrous Composites," CMU Report SM 79-15A, Pittsburgh, Pennsylvania.

Davis, J. G., Jr., 1975, "Compressive Strength of Fiber-Reinforced Composite Materials," Composite Reliability, ASTM STP 580, pp. 364-377.

Grimes, G. C. and D. F. Adams, October 1979, "Investigation of Compression Fatigue Properties of Advanced Composites," NOR79-17, Northrup Final Technical Report.

Hofer, K. E., Jr. and P. N. Rao, July 1977, "A New Static Compression Fixture for Advanced Composite Materials," Journal of Testing and Evaluation, JTEVA, Vol. 5, No. 4, pp. 278-283.

Jones, Robert M., 1975, Mechanics of Composite Materials, McGraw-Hill Book Co., Washington, D.C.

Kasen, M. B., 1975, "Properties of Filamentary-Reinforced Composites at Cryogenic Temperatures," Composite Reliability, ASTM STP 580, pp. 586-611.

Kasen, M. B., R. E. Schramm, and D. T. Read, 1977, "Fatigue of Composites at Cryogenic Temperatures," Fatigue of Filamentary Composite Materials, ASTM STP 636, pp. 141-151.

Raju, B. B., C. J. Camarda, and P. A. Cooper, September 1979, "Elevated-Temperature Application of the IITRI Compression Test Fixture for Graphite/Polyimide Filamentary Composites," NASA Technical Paper 1496, NASA Langley Research Center.

Rockwell International Corporation, 9 May 1975, Columbus Aircraft Division, Material Specification HB0130-102, pp. 1-20.

Rosenfeld, M. S. and S. L. Huang, May 1978, "Fatigue Characteristics of Gr/E Laminates under Compression Loading," Journal of Aircraft, Vol. 15, No. 5, pp. 264-268.

Ryder, J. T. and E. D. Black, 1977, "Compression Testing of Large Gauge Length Composite Coupons," Composite Materials: Testing and Design (Fourth Conference), ASTM STP 617, pp. 170-189.

Schramm, R. E. and M. B. Kasen, 1977, "Cryogenic Mechanical Properties of Boron-, Graphite-, and Glass-reinforced Composites," Materials Science and Engineering, Vol. 30, pp. 197-204.

ORIGINAL PAGE IS
OF POOR QUALITY

Shockey, P. D. and M. E. Waddoups, September 1966, "Strength and Modulus Determination of Composite Materials with Sandwich Beams," Report FZM4691, General Dynamics Corporation, Ft. Worth, Texas, presented at the American Ceramic Society Meeting, September, 1966.

Shuart, M. J. and C. T. Herakovich, September 1978, "An Evaluation of the Sandwich Beam in Four-Point Bending as a Compressive Test Method for Composites," NASA TM 78783.

Suarez, J. A., J. B. Whiteside, and R. N. Hadcock, 1972, "The Influence of Local Failure Modes on the Compressive Strength of B/E Composites," Composite Materials: Testing and Design (Second Conference), ASTM STP 497, pp. 237-256.

Weller, T., September 1977, "Experimental Studies of Gr/E and B/E Angle Ply Laminates in Compression," NASA-CR-145233, Technion-Israel Institute of Technology.