nasa TM-81701

NASA Technical Memorandum 81701

NASA-TM-81701 19830021442

Applications of Film Thickness Equations

Bernard J. Hamrock
Lewis Research Center
Cleveland, Ohio

and

Duncan Dowson
The University of Leeds
Leeds, England

LIBRARY COPY

JUL 21 1983

LANGLEY RESEARCH CENTER
LIBRARY, NASA
HAMPTON, VIRGINIA

May 1983

NASA

ENTER:
13 1 1 RN/NASA-TM-81701
DISPLAY 13/2/1
83N29713*# ISSUE 18 PAGE 2947 CATEGORY 37 RPT#: NASA-TM-81701
E-209 NAS 1.15:81701 83/05/00 108 PAGES UNCLASSIFIED DOCUMENT
UTTL: Applications of film thickness equations
AUTH: A/HAMROCK, B. J.; B/DOWSON, D. PAA: B/(Leeds Univ.)
CORP: National Aeronautics and Space Administration. Lewis Research Center, Cleveland, Ohio. AVAIL.NTIS SAP: HC A06/MF A01
Repr. from Ball Bearing Lubrication, chapter 13, Sep. 1981
MAJS: /*ELASTOHYDRODYNAMICS/*FILM THICKNESS/*LUBRICATION
MINS: / BALL BEARINGS/ GEARS/ LOCOMOTIVES/ ROLLER BEARINGS
ABA: Author
ABS: A number of applications of elastohydrodynamic film thickness expressions were considered. The motion of a steel ball over steel surfaces presenting varying degrees of conformity was examined. The equation for minimum film thickness in elliptical conjunctions under elastohydrodynamic conditions was applied to roller and ball bearings. An involute gear was also introduced, it was again found that the elliptical conjunction expression yielded a conservative estimate of the minimum film thickness. Continuously variable-speed drives like the Perbury gear, which present truly elliptical elastohydrodynamic conjunctions, are favored increasingly in mobile and static machinery. A representative elastohydrodynamic condition for this class of machinery is considered for power transmission equipment. The possibility of elastohydrodynamic films of water or oil
ENTER:
DISPLAY 13/2/1
forming between locomotive wheels and rails is examined. The important subject of traction on the railways is attracting considerable attention in various countries at the present time. The final example of a synovial joint introduced the equation developed for isoviscous-elastic regimes of lubrication.

NASA Technical Memorandum 81701

Applications of Film Thickness Equations

Bernard J. Hamrock
Lewis Research Center
Cleveland, Ohio

and

Duncan Dowson
The University of Leeds
Leeds, England

NASA
National Aeronautics and
Space Administration
Lewis Research Center

1983

N83-29713#

APPLICATIONS OF FILM THICKNESS EQUATIONS*

In this closing chapter a number of examples of applications of the film thickness equations for elliptical contacts developed throughout the text are presented to illustrate how the fluid-film lubrication conditions in specific machine elements can be analyzed. In the first example the reader is introduced to the relatively simple situation of a single steel ball rolling on plane, concave, and convex surfaces lubricated by a mineral oil. Typical dimensions of the Hertzian contact zone, the magnitude of the Hertzian contact stresses, and representative central and minimum film thicknesses are calculated to illustrate the problem and to generate an appreciation of the physics of the situation.

Typical roller and ball bearing problems are then considered, and in the latter case the concept of an equivalent load per unit length is introduced. In each case the influence of lubricant starvation is considered.

A simple involute gear is analyzed, and the film thickness predictions based on the elliptical-contact equations presented in Chapter 8 are compared with those for line contacts presented several years ago by Dowson (1968). The application to gears is then extended to a simplified form of one of the continuously variable-speed drives (CVD) now being introduced into road vehicles and aircraft equipment.

---

*Published as Chapter 13 in Ball Bearing Lubrication by Bernard J. Hamrock and Duncan Dowson, John Wiley & Sons, Inc., Sept. 1981.

The case of a railway wheel rolling on a wet or oily rail is then considered, since this introduces an interesting and slightly more complicated problem in contact mechanics.

An application of the film thickness equations for highly deformable or "soft" materials has been selected in the field of synovial joints. The analysis of elastohydrodynamic lubrication in load-bearing human joints is a more speculative example because the understanding of various aspects of the tribological behavior of synovial joints is incomplete.

13.1 Contact and Lubrication of a Steel Ball on Plane, Concave, and Convex Steel Surfaces

Consider a steel ball with a diameter of 10 mm and a density of 7800 kg/m^3. The mass of the ball will be 4.084 g and the weight about 0.04 N. If the ball and the steel on which it rolls both have a modulus of elasticity E of 2×10^{11} N/m^2 and a Poisson's ratio ν of 0.3, the effective elastic constant E' is given by

$$E' = \frac{E}{1 - \nu^2} = 2.2\times10^{11} \text{ N/m}^2$$

Dry contact between the ball and plane, concave, and convex surfaces of the form shown in Figure 13.1 is considered first. The concave and convex surfaces shown in Figures 13.1(b) and (c)

are each assumed to have radii of 10 mm in the plane perpendicular to the direction of rolling.

13.1.1 Dry Contact Between a 10-mm-Diameter Steel Ball and the Flat Surface of a Semi-Infinite Steel Block

The essential features of the Hertzian contact conditions for the geometry depicted in Figure 13.1(a) can be determined by the methods outlined in Chapter 3. Values of the semimajor a and semiminor b axes, the maximum local compression δ, and the maximum Hertzian compressive stress have been calculated from equations (3.13), (3.14), (3.15), and (3.6), respectively, for loads ranging from the static weight of the ball (0.04 N) to 1000 times this value (40 N).

The geometry is depicted in Figure 13.1(a) and it is evident that

$$r_{ax} = r_{ay} = 5 \text{ mm}$$

$$r_{bx} = r_{by} = \infty$$

Thus

$$\frac{1}{R_x} = \frac{1}{r_{ax}} + \frac{1}{r_{bx}} = \frac{1}{5} + \frac{1}{\infty} \tag{2.26}$$

giving $R_x = 5$ mm. And

$$\frac{1}{R_y} = \frac{1}{r_{ay}} + \frac{1}{r_{by}} = \frac{1}{5} + \frac{1}{\infty} \tag{2.27}$$

giving $R_y = 5$ mm. Hence

$$\frac{1}{R} = \frac{1}{R_x} + \frac{1}{R_y} = \frac{1}{5} + \frac{1}{5} \tag{2.24}$$

giving $R = 2.5$ mm. With $R_y/R_x = 1$ the approximate expressions for the complete elliptic integrals of the second and first kinds (equations (3.29) and (3.30)) and the ellipticity ratio k (equation (3.28)) indicate that

$$\bar{\mathscr{E}} = 1.5971, \ \bar{\mathscr{F}} = 1.5277, \ \bar{k} = 1.0339$$

The actual Hertzian contact zone will of course be circular such that $k = a/b = 1$, but these approximate values have been used to calculate the results shown in Table 13.1.

It is evident that even under the small static weight of the ball of 0.04 N a high maximum compressive stress of 151.9 MN/m^2 is generated in the center of a Hertzian contact circle with a radius of about 11 μm.

The differing values of the semimajor and semiminor axes a and b arise from the use of the approximate expression (3.28). In reality $k = 1$ for this geometry, and the correct value of the elliptic integrals of the first $\bar{\mathscr{F}}$ and second $\bar{\mathscr{E}}$ kinds should be 1.571. The true radius of the Hertzian contact circle generated by the static weight of the ball would be 11.09 μm, the maximum local compression 0.0246 μm, and the maximum compressive stress 155 MN/m^2.

The small divergence between the correct predictions from the Hertzian analysis and the values presented in Table 13.1 demonstrates the utility of the approximate procedure outlined in

Chapter 3. Furthermore it has been shown that even smaller discrepancies will arise for values of $k > 1$, as shown in Table 3.1.

Both the radius of the contact circle and the maximum contact stress increase slowly with increasing load in proportion to the one-third power of the load. It is nevertheless instructive to recognize that modest loads can produce such high contact stresses and that the radii of the contact circles in this representative example are expressed in tens or hundreds of micrometers.

13.1.2 Dry Contact Between a 10-mm-Diameter Steel Ball and a 10-mm-Radius Groove in a Semi-Infinite Steel Block

The geometry considered in this example of dry contact between a 10-mm-diameter steel ball and a 10-mm-radius groove in a semi-infinite steel block is depicted in Figure 13.1(b). It can be seen that

$$r_{ax} = r_{ay} = 5 \text{ mm}$$

$$r_{bx} = \infty \,, \quad r_{by} = -10 \text{ mm}$$

Thus

$$\frac{1}{R_x} = \frac{1}{5} + \frac{1}{\infty}$$

giving $R_x = 5$ mm. And

$$\frac{1}{R_y} = \frac{1}{5} - \frac{1}{10}$$

giving $R_y = 10$ mm. The relationship (2.17) is satisfied and hence the direction of x coincides with the semiminor axis of the Hertzian contact ellipse.

From equation (2.24)

$$\frac{1}{R} = \frac{1}{5} + \frac{1}{10}$$

giving $R = 10/3$ mm. With $R_y/R_x = 2$ the approximate expressions for the complete elliptic integrals of the second and first kinds (equations (3.29) and (3.30)) and the ellipticity ratio k (equation (3.28)) yield

$$\overline{\mathscr{E}} = 1.2987, \quad \overline{\mathscr{F}} = 1.9452, \quad \overline{k} = 1.6067$$

The contact dimensions and maximum compressive stresses for the same range of loads as that considered in Section 13.1.1 are recorded in Table 13.2.

This general geometry of a ball rolling in a groove is encountered in a number of bearing applications, including recirculating ball bearings and the well-known deep-groove ball bearing.

13.1.3 Dry Contact Between a 10-mm-Diameter Steel Ball and a 10-mm-Radius Steel Cylinder

In the case of dry contact between a 10-mm-diameter steel ball and a 10-mm-radius steel cylinder the ball is loaded against the cylinder as shown in Figure 13.1(c). In this case

$$r_{ax} = r_{ay} = 5 \text{ mm}$$

$$r_{bx} = \infty \, , \; r_{by} = 10 \text{ mm}$$

Thus

$$\frac{1}{R_x} = \frac{1}{5} + \frac{1}{\infty}$$

giving $R_x = 5$ mm. And

$$\frac{1}{R_y} = \frac{1}{5} + \frac{1}{10}$$

giving $R_y = 10/3$ mm. In this case the condition represented by equation (2.17) is not satisfied, and the semiminor axis of the contact ellipse thus coincides with the circumferential direction and the semimajor axis with a generator on the cylinder.

It has been explained in Section 2.2.4 that the convention for coordinates is to take x to be coincident with the semiminor axis; and if this does not emerge in any example, it is necessary to change the coordinate directions. In the present case it is important to take the axes x', y' to lie in the directions shown in Figure 13.1(c). Thus $R_{x'} = 10/3$ mm and $R_{y'} = 5$ mm and from equation (2.24)

$$\frac{1}{R} = \frac{3}{10} + \frac{1}{5}$$

giving $R = 2$ mm.

With $R_{y'}/R_{x'} = 3/2$ the approximate expressions for the complete elliptic integrals of the second and first kinds (equations (3.29) and (3.30)) and the ellipticity ratio $\bar{k}$ (equation (3.28)) yield

$$\bar{\mathscr{E}}' = 1.3982, \; \bar{\mathscr{F}}' = 1.7719, \; \bar{k}' = 1.3381$$

The contact dimensions and maximum compressive stresses for the range of loads considered in Section 13.1.1 are shown in Table 13.3. It should be emphasized that the major axis of the contact ellipse coincides with the surface of the cylinder.

13.1.4 Lubrication of a 10-mm-Diameter Steel Ball Rolling on the Flat Surface of a Semi-Infinite Steel Block

The Hertzian contact conditions for the lubrication of a 10-mm-diameter steel ball rolling on the flat surface of a semi-infinite steel block have been considered in Section 13.1.1. If the ball now rolls over the flat steel surface with a velocity of 1 m/s in the presence of a lubricant having an atmospheric viscosity η_0 of 0.05 N s/m^2 and a pressure-viscosity coefficient α of 2.0×10^{-8} m^2/N, the corresponding dimensionless speed U and materials G parameters become

$$U = \frac{\eta_0 u}{E'R_x} = \frac{0.05\times1}{2.2\times10^{11} \times 0.005} = 4.545\times10^{-11}$$

$$G = \alpha E' = 2.0\times10^{-8} \times 2.2\times10^{11} = 4400$$

For a static ball weight of 0.04 N the dimensionless load parameter becomes

$$W = \frac{F}{E'R_x^2} = \frac{0.04}{2.2\times10^{11} \times (0.005)^2} = 7.273\times10^{-9}$$

The first problem is to ascertain the regime of fluid-film lubrication in this example in which the ellipticity ratio k

equals 1. This can be achieved by calculating the dimensionless viscosity g_V and elasticity g_E parameters from equations (12.2) and (12.3), respectively, and then referring to Figure 12.1.

$$g_V = \frac{GW^3}{U^2} = 0.8195$$

$$g_E = \frac{W^{8/3}}{U^2} = 0.096$$

It is at once evident that the isoviscous-rigid lubrication regime operates, and hence the appropriate minimum film thickness equation is (6.22).

$$H_{min} = H_0 = 128\ \alpha_a \left\{ \frac{\lambda_b U}{W} \left[0.131\ \tan^{-1}\left(\frac{\alpha_a}{2}\right) + 1.683 \right] \right\}^2$$

where

$$\alpha_a = \frac{R_y}{R_x} = 1$$

and

$$\lambda_b = \frac{1}{1 + 2/3\alpha_a} = \frac{3}{5}$$

Thus

$$H_{min} = 128 \times \frac{9}{25} \frac{U^2}{W^2} (3.0406) = 140.1 \frac{U^2}{W^2}$$

or

$$H_{min} = 5.471\text{x}10^{-3} = \frac{h_{min}}{R_x}$$

In this case $R_x = 0.005$ m and hence the minimum film thickness is 27.4 μm. This is seen as a very substantial film thickness when compared with a typical surface roughness of steel balls used in ball bearings of about 0.1 μm.

It is also worth noting that the predicted rigid-isoviscous film thickness is much greater than the theoretical elastohydrodynamic minimum film thickness given by equation (8.23).

$$\tilde{H}_{min} = \frac{h_{min}}{R_x} = 3.63\ U^{0.68} G^{0.49} W^{-0.073} (1 - e^{-0.68k})$$

$$= 3.63 \times 9.271\times10^{-8} \times 60.99 \times 3.927 \times 0.4934$$

$$= 39.77\times10^{-6}$$

This corresponds to a minimum film thickness of 0.20 μm, which is only some 0.73 percent of the rigid-isoviscous prediction. The fact that the rigid-isoviscous prediction considerably exceeds the elastohydrodynamic film thickness confirms the fact that the former lubrication regime prevails.

If the ball rolls more slowly over the plane, the rigid-isoviscous and elastohydrodynamic predictions become coincident when

$$2.649\times10^{18}\ U^2 = 429.0\ U^{0.68}$$

or

$$U = 1.090\times10^{-12}$$

This values of U corresponds to a rolling speed of 0.024 m/s, with g_V and g_E adopting values of 1778 and 167, respectively. It can be seen from Figure 12.1 that these values fall close to the broken line representing the boundary between the

isoviscous-rigid and piezo-viscous-elastic, or elastohydrodynamic, regimes of lubrication for an ellipticity ratio of unity.

It is interesting and instructive to recognize that at rolling speeds less than 0.024 m/s, which is about 0.94 in./s, a 10-mm-diameter steel ball rolling on a steel surface in the presence of a lubricant of viscosity 0.05 N s/m^2 will experience elastohydrodynamic lubrication under its own weight. It is at once clear that nominal point contacts can readily experience the important mode of fluid-film lubrication that is the subject of this book. It must, however, be emphasized that the film thickness generated by a rolling speed of 0.024 m/s is only 0.016 μm, a value that is quite small when compared with the surface roughness of precision engineering components. It is also significant that this film thickness is very similar in magnitude to the local elastic compression shown in Table 13.1 for a load of 0.04 N.

The influence of load on minimum film thickness for a rolling speed of 1 m/s and loads ranging over two orders of magnitude is recorded in Table 13.4 for the lubrication regimes relevant to this situation. The values for the piezo-viscous-rigid (PVR) lubrication regime in Table 13.4 were obtained from equation (12.9). As the load increases from the static weight of the ball by a factor of 10, the minimum film thickness falls to one hundredth of its initial value, with the mode of lubrication being isoviscous-rigid. As the load increases further, elastic

distortion of the solids and influence of pressure on viscosity cause the isoviscous-rigid regime of lubrication to give way to the elastohydrodynamic, or the piezo-viscous-elastic, regime at a load of about 0.5 N, as shown in Figure 13.2.

This remarkable ability of the lubricated conjunction to preserve a near-constant minimum film thickness at high loads is a most important result of the influence of high pressures on both lubricant viscosity and elastic deformation in the phenomenon of the lubrication of nominal point contacts.

13.1.5 Lubrication of a 10-mm-Diameter Steel Ball Rolling in a 10-mm-Radius Groove in a Semi-Infinite Steel Block

It was found in Section 13.1.2 that the approximate ellipticity ratio $\bar{k}$ for the lubrication of a 10-mm-diameter steel ball rolling in a 10-mm-radius groove in a semi-infinite steel block was 1.6067. The essential features of the Hertzian contacts for a range of loads are displayed in Table 13.2. The value of R_x is again 0.005 m, and the values of the dimensionless groups U, G, W, g_V, and g_E remain the same as those recorded in the previous section for a lubricant with an atmospheric viscosity of 0.05 N s/m^2, a pressure-viscosity coefficient of 2×10^{-8} m^2/N, and a rolling speed of 1 m/s.

For the isoviscous-rigid regime of lubrication

$$\alpha_a = \frac{R_y}{R_x} = 2$$

and

$$\lambda_b = \frac{1}{1 + 2/3\alpha_a} = \frac{3}{4}$$

Hence

$$H_{min} = H_0 = 128\ \alpha_a \left\{ \frac{\lambda_b U}{W} \left[0.131\ \tan^{-1}\left(\frac{\alpha_a}{2}\right) + 1.683 \right] \right\}^2$$

or

$$H_{min} = 128 \times 2 \times \frac{9}{16} \frac{U^2}{W^2} (3.1894) = 459.27\ \frac{U^2}{W^2}$$

$$H_{min} = 1.7935\text{x}10^{-2} = \frac{h_{min}}{R_x}$$

The minimum film thickness h_m is thus 89.7 μm. This increased minimum film thickness results from the improved conformity between the ball and the groove.

The corresponding elastohydrodynamic minimum film thickness is given by

$$\tilde{H}_{min} = \frac{h_{min}}{R_x} = 3.63\ U^{0.68} G^{0.49} W^{-0.073} (1 - e^{-0.68k})$$

$$= 3.63 \times 9.271\text{x}10^{-8} \times 60.99 \times 3.927 \times 0.6646$$

$$= 53.57\text{x}10^{-6}$$

This corresponds to a minimum film thickness of 0.27 μm, which is only 0.30 percent of the isoviscous-rigid prediction. The mode of lubrication is thus clearly isoviscous-rigid, with the film thickness being greater by a factor of 3.27 than that achieved by a similar ball rolling over a flat surface. The advantages of

conformity are clear as far as both contact stresses and film thicknesses are concerned.

The influence of load on minimum film thickness for a rolling speed of 1 m/s is shown in Table 13.4. The appropriate lubrication regimes are also indicated.

It is again evident from Figure 13.3 that, as the load increases from the static weight of the ball, the film thickness falls rapidly in the isoviscous-rigid regime of lubrication.

13.1.6 Lubrication of a 10-mm-Diameter Steel Ball Rolling Along a 10-mm-Radius Steel Cylinder

In this case the major axis of the Hertzian contact ellipse coincides with the direction of rolling such that $R_x = 5$ mm and $R_y = 10/3$ mm. The ratio of the semiminor to semimajor axes is given by equation (3.28) as $\bar{k} = 0.7989$. The value of R_x is again 0.005 m, and for the same conditions as those considered in Sections 13.1.4 and 13.1.5 the dimensionless quantities U, G, W, g_V, and g_E remain constant.

For the isoviscous-rigid regime of lubrication

$$\alpha_a = \frac{R_y}{R_x} = \frac{2}{3}$$

and

$$\lambda_b = \frac{1}{1 + 2/3\alpha_a} = \frac{1}{2}$$

Hence

$$H_{min} = H_0 = 128\ \alpha_a \left\{ \frac{\lambda_b U}{W} \left[0.131\ \tan^{-1}\left(\frac{\alpha_a}{2}\right) + 1.683 \right] \right\}^2$$

or

$$H_{min} = 128 \times \frac{2}{3} \times \frac{1}{4} \frac{U^2}{W^2} (2.976) = 63.49\ \frac{U^2}{W^2}$$

$$H_{min} = 2.479\text{x}10^{-3} = \frac{h_{min}}{R_x}$$

The minimum film thickness is this situation, which exhibits the lowest degree of geometrical conformity, is thus only 12.4 μm.

The corresponding elastohydrodynamic minimum film thickness is given by

$$\tilde{H}_{min} = \frac{h_{min}}{R_x} = 3.63\ U^{0.68} G^{0.49} W^{-0.073} (1 - e^{-0.68k})$$

$$= 3.63 \times 9.271\text{x}10^{-8} \times 60.99 \times 3.927 \times 0.4191$$

$$= 33.78\text{x}10^{-6}$$

This corresponds to a minimum film thickness of 0.17 μm, which is the smallest of the elastohydrodynamic film thicknesses for the three geometrical configurations considered. It is only 1.4 percent of the isoviscous-rigid prediction, and this regime clearly governs the rolling of the ball at 1 m/s under its own weight.

The influence of load on minimum film thickness for a rolling speed of 1 m/s and for a range of loads is again shown in Table 13.4. The appropriate lubrication regimes are also indicated.

In this case the transition from an isoviscous-rigid regime of lubrication to elastohydrodynamic, or piezo-viscous-elastic, conditions occurs earlier than in the previous examples.

13.1.7 Summary

Throughout Section 13.1 we have considered the Hertzian contact and lubrication of a 10-mm-diameter steel ball on plane, concave, and convex steel surfaces. The examples have been presented in full to illustrate how the material presented earlier in the book can be used to analyze lubricated nominal point contacts. The results demonstrate the essential features of the major regimes of lubrication encountered in these simple geometrical configurations.

In the next section we turn to the analysis of elastohydrodynamic lubrication in roller and ball bearings.

13.2 Rolling-Element Bearings

The equations for elastohydrodynamic film thickness developed in Chapter 8 relate primarily to nominal point contacts, but they are sufficiently general to allow them to be used with adequate accuracy in most line-contact problems. This will be demonstrated

in this section in relation to a cylindrical roller bearing and in Section 13.3 in relation to spur gears.

A radial ball bearing will also be analyzed in the present section, and the influence of lubricant starvation will be considered.

13.2.1 Cylindrical Roller Bearing Problem

The minimum elastohydrodynamic film thicknesses on the inner and outer races of a cylindrical roller bearing having the following dimensions will be calculated. This particular bearing problem was analyzed on the basis of elastohydrodynamic theory for line contacts by Dowson and Higginson (1966)

Inner-race diameter, d_i . . . . . 64 mm, or 0.064 m
Outer-race diameter, d_o . . . . . 96 mm, or 0.096 m
Diameter of cylindrical rollers, d . . . . . 16 mm, or 0.016 m
Axial length of cylindrical rollers, ... 16 mm, or 0.016 m

The most heavily loaded roller experiences the following conditions:

Radial load on the most heavily loaded roller . . . . . 4800 N

Radial load per unit length on the most

heavily loaded roller . . . . . 4800/0.016 = 0.3 MN/m

Inner-ring angular velocity, ω_i . . . . . 524 rad/s

Outer-ring angular velocity, ω_o 0

Lubricant viscosity at atmospheric pressure

and the effective operating temperature of

the bearing, η_0 . . . . . 0.01 N s/m^2

Viscosity-pressure coefficient, α . . . . . 2.2×10^{-8} m^2/N

Modulus of elasticity for both the rollers

and rings, E . . . . . 2.075×10^{11} N/m^2

Poisson's ratio, ν 0.3

Calculation

Since we are dealing with a cylindrical roller and not a ball, it is necessary to return to the basic relationships of equations (2.26) and (2.27) in order to calculate the effective radii of curvature R_x and R_y, rather than to equations (2.28) and (2.29), which involve the angle β and the conformity ratio f.

With reference to Figure 13.5 we can write

$$r_{ax} = 0.008 \text{ m}, \quad r_{ay} = \overline{\infty}$$

$$r_{bx,i} = 0.032 \text{ m}, \quad r_{by,i} = \infty$$

$$r_{bx,o} = 0.048 \text{ m}, \quad r_{by,o} = \infty$$

Then

$$\frac{1}{R_{x,i}} = \frac{1}{0.008} + \frac{1}{0.032} = \frac{5}{0.032} \tag{2.26}$$

giving $R_{x,i} = 0.0064$ m

$$\frac{1}{R_{x,o}} = \frac{1}{0.008} - \frac{1}{0.048} = \frac{5}{0.048}$$

giving $R_{x,o} = 0.0096$ m

$$\frac{1}{R_{y,i}} = \frac{1}{\infty} + \frac{1}{\infty} = 0$$

giving $R_{y,i} = \infty$

$$\frac{1}{R_{y,o}} = \frac{1}{\infty} + \frac{1}{\infty} = 0$$

giving $R_{y,o} =$

$$E' = \frac{2}{\dfrac{1 - \nu_a^2}{E_a} + \dfrac{1 - \nu_b^2}{E_b}} = 2.28\text{x}10^{11} \text{ N/m}^2$$

For pure rolling the surface velocities u relative to the lubricated conjunction are given for both ball and roller bearings by equations (2.50) to (2.52). For a cylindrical roller $\beta = 0$; hence

$$u = \frac{d_e^2 - d^2}{4d_e} \left|\omega_i - \omega_o\right| \tag{2.50}$$

where d_e is the pitch diameter and d is the roller diameter.

$$d_e = \frac{d_o + d_i}{2} = \frac{0.096 + 0.064}{2} = 0.08 \text{ m} \tag{2.1}$$

Hence

$$u = \frac{0.08^2 - 0.016^2}{4x0.08} |524 - 0| = 10.061 \text{ m/s}$$

The dimensionless speed, materials, and load parameters for the inner- and outer-race conjunctions thus become

$$U_i = \frac{\eta_0 u}{E' R_{x,i}} = \frac{0.01 \text{ x } 10.061}{2.28x10^{11} \text{ x } 0.0064} = 6.895x10^{-11}$$

$$G_i = \alpha E' = 5016$$

$$W_i = \frac{F}{E'(R_{x,i})^2} = \frac{4800}{2.28x10^{11} \text{ x } (0.0064)^2} = 5.140x10^{-4}$$

$$U_o = \frac{\eta_0 u}{E' R_{x,o}} = \frac{0.01 \text{ x } 10.061}{2.28x10^{11} \text{ x } 0.0096} = 4.597x10^{-11}$$

$$G_o = \alpha E' = 5016$$

$$W_i = \frac{F}{E'\left(R_{x,o}\right)^2} = \frac{4800}{2.28x10^{11} \text{ x } (0.0096)^2} = 2.284x10^{-4}$$

The appropriate point-contact elastohydrodynamic film thickness equation for a fully flooded conjunction was developed in Chapter 8 and recorded as equation (8.23).

$$H_{min} = \frac{h_{min}}{R_x} = 3.63 \; U^{0.68} G^{0.49} W^{-0.073} (1 - e^{-0.68k}) \qquad (8.23)$$

In the case of a nominal line contact $k = \infty$ and equation (8.23) reduces to

$$H_{min} = 3.63 \; U^{0.68} G^{0.49} W^{-0.073}$$

Ball - inner-race conjunction:

$$H_{min} = \frac{h_{min}}{R_{x,i}} = 3.63 \times 1.231\times10^{-7} \times 65.04 \times 1.738 = 50.5\times10^{-6}$$

and hence

$$h_{min} = 0.0064 \times 50.5\times10^{-6} = 0.32\ \mu m$$

Ball - outer-race conjunction:

$$H_{min} = \frac{h_{min}}{R_{x,o}} = 3.63 \times 9.343\times10^{-8} \times 65.04 \times 1.844 = 40.7\times10^{-6}$$

and thus

$$h_{min} = 0.0096 \times 40.7\times10^{-6} = 0.39\ \mu m$$

It is clear from these calculations that the minimum film thickness in the bearing occurs at the ball - inner-race conjunction, where the geometrical conformity is least favorable.

In their 1966 book Dowson and Higginson proposed a minimum elastohydrodynamic film thickness equation for nominal line contacts of the form

$$H^* = \frac{h_{min}}{R} = 1.6\ G^{0.6}U^{0.7}W^{-0.13}$$

where

$$W = \frac{F}{E'R\ell}$$

ℓ being the unit length of the roller. In the present example $\ell = 0.016$ m and hence

$$W_i = \frac{4800}{2.28\times10^{11} \times 0.0064 \times 0.016} = 2.056\times10^{-4}$$

$$W_o = \frac{4800}{2.28\times10^{11} \times 0.0096 \times 0.016} = 1.371\times10^{-4}$$

Thus $H_i^* = 61.7 \times 10^{-6}$ and $H_o^* = 49.0 \times 10^{-6}$, giving $(h_i)_{min} = 0.39$ μm and $(h_o)_{min} = 0.47$ μm.

The original line-contact predictions of film thickness thus exceed the predictions based on extrapolations from the new point-contact theory by about 20 percent. It should, however, be noted that the nominal point-contact theory predictions are conservative from the design point of view.

Influence of Lubricant Starvation

The predicted minimum film thickness of 0.32 μm should just about ensure elastohydrodynamic lubrication in well-produced roller bearings. However, the calculation was based on the assumption of a fully flooded conjunction; and if this condition is not satisfied, a reduced minimum film thickness will ensue.

The role of lubricant starvation has been discussed in Chapter 9, and in Section 9.4 attention was drawn to the important zero-reverse-flow boundary condition. In the absence of any specific information about the extent to which the inlet to an elastohydrodynamic conjunction in a roller bearing is filled with lubricant, it is reasonable to assume that the zero-reverse-flow inlet boundary condition operates. Dowson, Saman, and Toyoda (1979) have shown that, in pure rolling, elastohydrodynamic conjunctions achieve only 70.3 percent of their predicted fully flooded film thicknesses when the zero-reverse-flow boundary condition operates. In the present example the inner and outer

raceway minimum film thicknesses would thus be

$$(h_{min})_i = 0.703 \times 0.32 = 0.22 \ \mu m$$

$$(h_{min})_o = 0.703 \times 39 = 0.27 \ \mu m$$

13.2.2 Radial Ball Bearing Problem

We now turn to the type of problem that did much to promote the studies of elastohydrodynamic theory for nominal point contacts upon which this book is based. Considerable difficulty had been experienced in applying elastohydrodynamic theory for line contacts to the conjunctions encountered in ball bearings.

Consider a single-row, radial, deep-groove ball bearing with the following dimensions:

Inner-race diameter, d_i	0.052291 m
Outer-race diameter, d_o	0.077706 m
Ball diameter, d	0.012700 m
Number of balls in complete bearing, n	9
Inner-groove radius, r_i	0.006604 m
Outer-groove radius, r_o	0.006604 m
Contact angle, β	0
rms surface finish of balls, f_b	0.0625 μm
rms surface finish of races, f_r	0.175 μm

A bearing of this kind might well experience the following operating conditions:

Radial load, F_r . . . . . 8900 N

Inner-ring angular velocity, ω_i . . . . . 400 rad/s

Outer-ring angular velocity, ω_o 0

Lubricant viscosity at atmospheric pressure and

effective operating temperature of bearing, η_0 . . . 0.04 N s/m^2

Viscosity-pressure coefficient, α . . . . . 2.3×10^{-8} m^2/N

Modulus of elasticity for both balls and rings, E . . . 2×10^{11} N/m^2

Poisson's ratio for both balls and rings, ν 0.3

Calculation

It will be assumed initially that the lubricated conjunctions receive sufficient lubricant to enable them to be treated as fully flooded. The objective is then to determine the minimum elastohydrodynamic film thicknesses on the inner and outer races.

The essential features of the geometry of the inner and outer conjunctions (Figures 2.13 and 2.19) can be ascertained as follows:

Pitch diameter (eq. (2.1)), $d_e = 1/2\ (d_o + d_i)$ . . . . . 0.065 m

Diametral clearance (eq. (2.2)), $P_d = d_o - d_i - 2d$ . . . 1.5×10^{-5} m

Race conformity (eq. (2.3)), $f_i = f_o = r/d$ 0.52

Equivalent radius (Table 13.5), $R_{x,i} = d(d_e - d)/2d$ . . 0.00511 m

Equivalent radius (Table 13.5), $R_{x,o} = d(d_e + d)/2d$ . . 0.00759 m

Equivalent radius (eq. (2.29)), $R_{y,i} = f_i d/(2f_i - 1)$ . . . 0.165 m

Equivalent radius (eq. (2.29)), $R_{y,o} = f_o d/(2f_o - 1)$ . . . 0.165 m

And the curvature sums

$$\frac{1}{R_i} = \frac{1}{R_{x,i}} + \frac{1}{R_{y,i}} = 201.76$$

giving $R_i = 4.956\text{x}10^{-3}$ m and

$$\frac{1}{R_o} = \frac{1}{R_{x,o}} + \frac{1}{R_{y,o}} = 137.81$$

giving $R_o = 7.256\text{x}10^{-3}$ m. Also, $R_{y,i}/R_{x,i} = 32.35$ and $R_{y,o}/R_{x,o} = 21.74$.

The nature of the Hertzian contact conditions can now be assessed.

Ellipticity parameters:

$$\bar{k}_i = 1.0339 \left(\frac{R_{y,i}}{R_{x,i}}\right)^{0.636} = 9.42 \qquad (3.28)$$

$$\bar{k}_o = 1.0339 \left(\frac{R_{y,o}}{R_{x,o}}\right)^{0.636} = 7.09 \qquad (3.28)$$

Elliptic integrals:

$$\bar{\mathscr{E}}_i = 1.0003 + \frac{0.5968}{(R_{y,i}/R_{x,i})} = 1.0188 \qquad (3.29)$$

$$\bar{\mathscr{E}}_o = 1.0003 + \frac{0.5968}{(R_{y,o}/R_{x,o})} = 1.0278 \qquad (3.29)$$

$$\bar{\mathscr{F}}_i = 1.5277 + 0.6023 \ln\left(\frac{R_{y,i}}{R_{x,i}}\right) = 3.6205 \qquad (3.30)$$

$$\bar{\mathscr{F}}_o = 1.5277 + 0.6023 \ln\left(\frac{R_{y,o}}{R_{x,o}}\right) = 3.3823 \qquad (3.30)$$

The effective elastic modulus E' is given by

$$E' = \frac{2}{\frac{1-\nu_a^2}{E_a} + \frac{1-\nu_b^2}{E_b}} = 2.198\text{x}10^{11}\ \text{N/m}^2 \qquad (3.16)$$

To determine the load carried by the most heavily loaded ball in the bearing, it is necessary to adopt an iterative procedure based on the calculation of local static compression and the analysis presented in Chapter 3. Stribeck (1907) found that the value of Z was about 4.37 in the expression

$$F_{max} = \frac{Z}{n} F_r$$

where

F_{max} = load on most heavily loaded ball

F_r = radial load on bearing

n = number of balls

However, it is customary to adopt a value of $Z = 5$ in simple calculations in order to produce a conservative design, and this value will be used to begin the iterative procedure.

Stage 1: Assume $Z = 5$. Then

$$F_{max} = \frac{5F_r}{9} = \frac{5}{9} \times 8900 = 4944\ \text{N} \qquad (3.47)$$

The maximum local elastic compression is

$$\delta_i = \bar{\mathscr{F}}_i \left[\left(\frac{9}{2\bar{\mathscr{E}}_i R_i}\right)\left(\frac{F_{max}}{\pi \bar{k}_i E'}\right)^2\right]^{1/3} = 2.902\text{x}10^{-5} \text{ m} \qquad (3.15)$$

$$\delta_o = \bar{\mathscr{F}}_o \left[\left(\frac{9}{2\bar{\mathscr{E}}_o R_o}\right)\left(\frac{F_{max}}{\pi \bar{k}_o E'}\right)^2\right]^{1/3} = 2.877\text{x}10^{-5} \text{ m} \qquad (3.15)$$

The sum of the local compressions on the inner and outer races

$$\delta = \delta_i + \delta_o = 5.779\text{x}10^{-5} \text{ m}$$

A better value for Z can now be obtained from

$$Z = \frac{\pi \left(1 - \frac{P_d}{2\delta}\right)^{3/2}}{2.491\left\{\left[1 + \left(\frac{1 - \frac{P_d}{2\delta}}{1.23}\right)^2\right]^{1/2} - 1\right\}} \qquad (3.48)$$

since

$$\frac{P_d}{2\delta} = \frac{1.5\text{x}10^{-5}}{5.779\text{x}10^{-5}} = 0.1298$$

Thus from equation (3.48)

$$Z = 4.551$$

Stage 2:

$$Z = 4.551$$

$$F_{max} = \frac{4.551 \text{ x } 8900}{9} = 4500 \text{ N}$$

$$\delta_i = 2.725\text{x}10^{-5} \text{ m}$$

$$\delta_o = 2.702\text{x}10^{-5} \text{ m}$$

$$\delta = 5.427\text{x}10^{-5} \text{ m}$$

$$\frac{P_d}{2\delta} = 0.1382$$

Thus

$$Z = 4.565$$

Stage 3:

$$Z = 4.565$$

$$F_{max} = \frac{4.565 \text{ x } 8900}{9} = 4514 \text{ N}$$

$$\delta_i = 2.731\text{x}10^{-5} \text{ m}$$

$$\delta_o = 2.708\text{x}10^{-5} \text{ m}$$

$$\delta = 5.439\text{x}10^{-5} \text{ m}$$

$$\frac{P_d}{2\delta} = 0.1379$$

Thus

$$Z = 4.564$$

This value is very close to the previous value from stage 2 of 4.565, and a further iteration confirms its accuracy.

Stage 4:

$$Z = 4.564$$

$$F_{max} = \frac{4.564 \text{ x } 8900}{9} = 4513 \text{ N}$$

$$\delta_i = 2.731\text{x}10^{-5} \text{ m}$$

$$\delta_o = 2.707\text{x}10^{-5} \text{ m}$$

$$\delta = 5.438\text{x}10^{-5} \text{ m}$$

$$\frac{P_d}{2\delta} = 0.1379$$

and hence

$$Z = 4.564$$

The load on the most heavily loaded ball is thus 4513 N.

Elastohydrodynamic Minimum Film Thickness

For pure rolling (Table 13.5)

$$u = \frac{d_e^2 - d^2}{4d_e} \left|\omega_o - \omega_i\right| = 6.252 \text{ m/s}$$

The dimensionless speed, materials, and load parameters for the inner- and outer-race conjunctions thus become

$$U_i = \frac{\eta_0 u}{E'R_{x,i}} = \frac{0.04 \times 6.252}{2.198\text{x}10^{11} \times 5.11\text{x}10^{-3}} = 2.227\text{x}10^{-10}$$

$$G_i = \alpha E' = 2.3\text{x}10^{-8} \times 2.198\text{x}10^{11} = 5055$$

$$W_i = \frac{F}{E'(R_{x,i})^2} = \frac{4513}{2.198\text{x}10^{11} \times (5.11)^2\text{x}10^{-6}} = 7.863\text{x}10^{-4}$$

$$U_o = \frac{\eta_0 u}{E'R_{x,o}} = \frac{0.04 \times 6.252}{2.198\text{x}10^{11} \times 7.59\text{x}10^{-3}} = 1.499\text{x}10^{-10}$$

$$G_o = \alpha E' = 2.3\text{x}10^{-8} \times 2.198\text{x}10^{11} = 5055$$

$$W_o = \frac{F}{E'(R_{x,o})^2} = \frac{4513}{2.198\text{x}10^{11} \times (7.59)^2\text{x}10^{-6}} = 3.564\text{x}10^{-4}$$

The dimensionless minimum elastohydrodynamic film thickness in a fully flooded elliptical contact is given by equation (8.23).

$$H_{min} = \frac{h_{min}}{R_x} = 3.63\ U^{0.68} G^{0.49} W^{-0.073} (1 - e^{-0.68k}) \qquad (8.23)$$

Ball - inner-race conjunction:

$$(H_{min})_i = \frac{(h_{min})_i}{R_{x,i}} = 3.63\ U_i^{0.68} G^{0.49} W_i^{-0.073} (1 - e^{-0.68\bar{k}_i})$$

$$= 3.63 \times 2.732\times10^{-7} \times 65.29 \times 1.685 \times 0.9983$$

$$(H_{min})_i = 1.09\times10^{-4}$$

Thus

$$(h_{min})_i = 1.09\times10^{-4}\ R_{x,i} = 0.557\ \mu m$$

The lubrication factor Λ discussed in Section 3.5.2 is found to play a significant role in determining the fatigue life of rolling-element bearings. In this case

$$\Lambda_i = \frac{h_i}{\left(f_r^2 + f_b^2\right)^{1/2}} = \frac{0.557\times10^{-6}}{\left[(0.175)^2 + (0.0625)^2\right]^{1/2} \times10^{-6}} = 3.00$$

Ball - outer-race conjunction:

$$(H_{min})_o = \frac{(h_{min})_o}{R_{x,o}} = 3.63\ U_o^{0.68} G^{0.49} W_o^{-0.073} (1 - e^{-0.68\bar{k}_o})$$

$$= 3.63 \times 2.087\times10^{-7} \times 65.29 \times 1.785 \times 0.9919$$

$$(H_{min})_o = 0.876\times10^{-4}$$

Thus

$$(h_{min})_o = 0.876\text{x}10^{-4}\ R_{x,o} = 0.665\ \mu m$$

In this case the lubrication factor Λ is given by

$$\Lambda = \frac{0.665\text{x}10^{-6}}{\left[(0.175)^2 + (0.0625)^2\right]^{1/2}\text{x}10^{-6}} = 3.58$$

Once again it is evident that the minimum film thickness occurs between the most heavily loaded ball and the inner race. However, in this case the minimum elastohydrodynamic film thickness is about three times the composite surface roughness, and the bearing lubrication can be deemed to be entirely satisfactory. Indeed, it is clear from Figure 3.16 that very little improvement in the lubrication factor F and hence the fatigue life of the bearing could be achieved by further improving the minimum film thickness and hence Λ.

Application of Line-Contact Equations

In Chapter 8 attention was drawn to the possibility of using the elastohydrodynamic line-contact equations in association with the effective length of the contact designed to produce the same maximum or mean pressures in the actual elliptical and equivalent rectangular conjunctions. In the present example the contact is highly elongated, with ellipticity ratios of 9.42 and 7.09 on the inner and outer races. It is therefore likely that the modified line-contact equation will give reasonable predictions of film thickness in this case.

The semimajor axis is determined by

$$a = \left(\frac{6\bar{k}^2\bar{\mathscr{E}}FR}{\pi E'}\right)^{1/3} \tag{3.13}$$

Thus considering the inner-race conjunction only,

$$a = \left(\frac{6 \times (9.42)^2 \times 1.0188 \times 4513 \times 0.004956}{\pi \times 2.198\text{x}10^{11}}\right)^{1/3} = 2600\ \mu\text{m}$$

and for equal <u>maximum</u> pressures $\ell = 4/3\ a\bar{\mathscr{E}}_i = 3531\ \mu\text{m}$, while for equal <u>mean</u> pressures $\ell = 3/16\ \pi^2 a\bar{\mathscr{E}}_i = 4902\ \mu\text{m}$.

We can now examine the results of using each of these effective lengths in the elastohydrodynamic minimum film thickness equation for line contacts.

$$H_{min} = 2.65\ U^{0.7}G^{0.54}W^{-0.13} \tag{8.26}$$

where W is now $F/E'R_x\ell$. Thus

$$(H_{min})_i = 4.6415\text{x}10^{-5}(W_i)^{-0.13}$$

and for equal <u>maximum</u> pressures $(H_{min})_i = 1.12\text{x}10^{-4}$, while for equal <u>mean</u> pressures $(H_{min})_i = 1.16\text{x}10^{-4}$. If the major axis of the contact ellipse ($2a = 5200\ \mu\text{m}$) had been used, the result would have been $(H_{min})_i = 1.17\text{x}10^{-4}$.

The percentage differences from the elliptical-contact result of $1.09\text{x}10^{-4}$ obtained earlier are 2.4 and 6.9 percent when values of ℓ corresponding to equal maximum and mean pressures are used, respectively. The percentage difference obtained when the major axis of the major ellipse is used is 7.7 percent. It is clear that, in this example, little error is introduced by

judicious use of the line-contact equation. Furthermore the example demonstrates that the best agreement between the nominal point- and line-contact predictions is achieved when the equivalent load per unit length is calculated on the basis of equal maximum pressures.

Influence of Lubricant Starvation

The film thicknesses calculated in this example have been based on the assumption that the conjunctions were adequately lubricated. In reality, very little lubricant is required to satisfy this condition, as will be shown.

In Chapter 9 it was shown that an elliptical elastohydrodynamic conjunction can be considered to be fully flooded if the lubricant fills the clearance space at or beyond a dimensionless distance upstream from the center of the Hertzian zone, $m^* = x_{inlet}/b$, given by

$$m^* = 1 + 3.34 \left[\left(\frac{R_x}{b} \right)^2 H_{min} \right]^{0.56} \tag{9.4}$$

Now

$$b = \left(\frac{6 \mathscr{F} R}{\pi \bar{k} E'} \right)^{1/3} \tag{3.14}$$

and for the ball - inner-race conjunction

$$b = \left(\frac{6 \times 1.0188 \times 4513 \times 0.004956}{\pi \times 9.42 \times 2.198 \times 10^{11}} \right)^{1/3} = 2.760 \times 10^{-4} \text{ m}$$

Thus

$$m^* = 1 + 3.34 \left[\left(\frac{0.00511}{2.760\text{x}10^{-4}}\right)^2 \text{ x } 1.09\text{x}10^{-4}\right]^{0.56} = 1.530$$

In this case the conjunction is deemed to be fully flooded if the clearance space is filled with lubricant for a distance of only half a Hertzian semiminor axis in front of the Hertzian contact zone. Even when the conjunction is starved of lubricant such that the full film forms at half the fully flooded distance of 0.530 in front of the Hertzian contact zone, a respectable lubricating film is formed.

In Chapter 9 it was shown that the starved elastohydrodynamic minimum film thickness is given by

$$H_{min,s} = H_{min} \left(\frac{\tilde{m} - 1}{m^* - 1}\right)^{0.25} \tag{9.8}$$

For the ball - inner-race conjunction this becomes

$$H_{min,s} = H_{min} \left(\frac{0.265}{0.530}\right)^{0.25} = H_{min}(0.5)^{0.25}$$

or

$$H_{min,s} = 0.84\ H_{min}$$

The effect of this quite severe lubricant starvation is to reduce the minimum film thickness by only 16 percent.

13.3 Power Transmission Equipment

In this section we consider the application of the elastohydrodynamic minimum film thickness equations to two forms of power transmission equipment. The first example is a simple involute spur gear, and the second is a simplified form of one of several types of continuously variable-speed drives that are now being developed and that are being used increasingly in aircraft equipment and road vehicles.

13.3.1 Involute Gears

It is well known that the contact between gear teeth at a distance S from the pitch line in a pair of involute gear wheels having radii R_1 and R_2 and a pressure angle ψ can be represented by two circular cylinders of radii $(R_1 \sin\psi + S)$ and $(R_2 \sin\psi - S)$ rotating with the same angular velocities Ω_1 and Ω_2 as the wheels themselves. Indeed this observation forms the basis of the two-disc machine that has been used so extensively and effectively in experimental studies of gear lubrication in general and elastohydrodynamic lubrication in particular. The problem has been considered by Dowson and Higginson (1964, 1966), and in the present case we demonstrate how the minimum elastohydrodynamic film thickness equation for elliptical contacts can be applied to this nominal line-contact problem. The general geometry of the configuration is shown in Figure 13.6.

Consider a pair of involute gear wheels having radii of 50 and 75 mm and a pressure angle of 20°. Let the angular velocity of the larger wheel be 210 rad/s (≈2000 rpm), the width of the gear teeth 15 mm, and the load transmitted between the teeth 22,500 N. Let the essential properties of the lubricant and the materials of the wheels adopt the following values:

$$\eta_0 = 0.075 \text{ N s/m}^2$$

$$\alpha = 2.2\text{x}10^{-8} \text{ m}^2\text{/N}$$

$$E = 207 \text{ GN/m}^2$$

$$\nu = 0.3$$

Calculate the minimum film thickness on the pitch line. Then

$$R_1 = 0.075 \text{ m}, \; r_{ay} = \infty$$

$$R_2 = 0.050 \text{ m}, \; r_{by} = \infty$$

$$\text{Gear rate} = \frac{R_1}{R_2} = \frac{\Omega_2}{\Omega_1} = 1.5$$

$$\text{Radii of cylinders} = (R_1 \sin\psi + S) = R_1 \sin\psi$$

$$r_{ax} = 0.075 \sin 20^\circ = 0.02565 \text{ m}$$

and

$$(R_2 \sin \psi - S) = R_2 \sin \psi$$

or

$$r_{bx} = 0.050 \sin 20^\circ = 0.01710 \text{ m}$$

Hence

$$\frac{1}{R_x} = \frac{1}{0.02565} + \frac{1}{0.01710} = 38.99 + 58.48$$

giving $R_x = 0.01026$ m

$$u = \frac{\Omega_1 R_1 \sin \psi + \Omega_2 R_2 \sin \psi}{2} = \Omega_1 R_1 \sin \psi = 210 \times 0.02565 = 5.387 \text{ m/s}$$

$$E' = \frac{E}{1 - \nu^2} = 2.275\text{x}10^{11} \text{ N/m}^2$$

Thus

$$U = \frac{\eta_0 u}{E' R_x} = \frac{0.075 \times 5.387}{2.275\text{x}10^{11} \times 0.01026} = 1.731\text{x}10^{-10}$$

$$G = \alpha E' = 5005$$

$$W = \frac{F}{E'(R_x)^2} = \frac{22{,}500}{2.275\text{x}10^{11} \times (0.01026)^2} = 9.395\text{x}10^{-4}$$

and

$$k = \infty$$

Now

$$H = 3.63\ U^{0.68} G^{0.49} W^{-0.073} (1 - e^{-0.68k})$$

$$= 3.63 \times (1.731\text{x}10^{-10})^{0.68} \times (5005)^{0.49} \times (9.395\text{x}10^{-4})^{-0.073} \times 1$$

$$= 3.63 \times 2.302\text{x}10^{-7} \times 64.97 \times 1.663$$

$$H_{min} = 0.903\text{x}10^{-4}$$

The minimum film thickness thus is

$$h_{min} = H_{min} \times R_x = 0.903\times10^{-4} \times 0.01026$$

or

$$h_{min} = 0.93\ \mu m$$

The line-contact formula for minimum elastohydrodynamic film thickness is

$$H_{min} = 2.65\ U^{0.7} G^{0.54} W^{-0.13} \tag{8.26}$$

where

$$W = \frac{F}{E'(R_x)\ell} = \frac{22,500}{2.275\times10^{11} \times 0.01026 \times 0.015} = 6.426\times10^{-4}$$

Hence

$$H_{min} = 2.65 \times (1.731\times10^{-10})^{0.7} \times (5005)^{0.54} \times (6.426\times10^{-4})^{-0.13}$$

$$= 2.65 \times 1.468\times10^{-7} \times 99.47 \times 2.600$$

$$H_{min} = 1.01\times10^{-4}$$

The line- and point-contact minimum film thickness predictions thus agree to within 12 percent. Again it should be noted that the point- or elliptical-contact equation yields the lower of the two film thickness predictions.

The lubrication factor Λ is defined as

$$\Lambda = \frac{h_{min}}{\left(f_r^2 + f_b^2\right)^{1/2}} \tag{3.125}$$

$$= \frac{0.93}{[(0.3)^2 + (0.3)^2]^{1/2}} = \frac{0.93}{0.4243}$$

$$= 2.2$$

It is thus clear from Figure 3.16 that the pair of involute gears considered in this example should enjoy the benefits of a reasonably satisfactory elastohydrodynamic minimum film thickness. However, the figure also indicates that some improvement in the life of the gears could be anticipated if Λ could be increased to about 3. In practical situations such an improvement would probably be achieved by increasing the lubricant viscosity η_0 or by decreasing the rms surface roughness σ of the wheels.

13.3.2 Continuously Variable-Speed Drive

Interest in oil-film or rolling friction drives for power transmission equipment dates back to the last century. A patent application for a variable-speed drive using discs with toroidal surfaces and rollers that could be tilted to change the speed ratio was filed in 1899. Since that time many different configurations have been designed, and several were included in a survey published by Cahn-Speyer (1957). A particular and more recent form of this type of drive, known as the Perbury gear, has been described by Fellows, et al. (1964).

Geometrical Calculations

Consider the double toroidal layout shown in Figure 13.7 in which three symmetrically arranged rollers that can be tilted to change the ratio of input to output speeds are located on each

side of the central disc. Power is delivered to the end discs, which either incorporate a mechanical end loading device sensitive to input torque or, in an improved version, a hydraulic loading cylinder applying a load proportional to the sum of the input and output torques (i.e., proportional to the forces to be transmitted to the lubricant film). A roller control mechanism automatically ensures that the power transmitted through the unit is distributed equally between the six rollers. Such continuously variable-speed drives provide a smooth transmission of power, typically over a speed ratio range of about 5:1, in a jerk-free manner.

The life and efficiency of continuously variable-speed drives of this nature depend on the characteristics of the lubricating films between the rollers and the toroidal surfaces. The traction characteristics are beyond the scope of the present text, but it is possible to show how the lubricant film thickness can be calculated.

The radii at the inner and outer conjunctions between a single roller and the toroidal surfaces on the driving and driven discs are shown in Figure 13.8. If subscripts a and b are used to identify the roller and toroidal discs, respectively, it can be seen that

Inner conjunction:

$$r_{ax} = r, \; r_{ay} = nr$$

$$r_{bx} = \frac{z}{\sin \phi} = \frac{Z - r \sin \phi}{\sin \phi}, \; r_{by} = -r$$

Hence

$$\frac{1}{R_{x,i}} = \frac{1}{r_{ax}} + \frac{1}{r_{bx}} = \frac{1}{r} + \frac{\sin\phi}{Z - r\sin\phi} \tag{2.26}$$

giving $R_{x,i} = r[1 - (r/Z)\sin\phi]$, and

$$\frac{1}{R_{y,i}} = \frac{1}{r_{ay}} + \frac{1}{r_{by}} = \frac{1}{nr} - \frac{1}{r} \tag{2.27}$$

giving $R_{y,i} = [n/(1 - n)]r$

Outer conjunction:

$$r_{ax} = r,\ r_{ay} = nr$$

$$r_{bx} = -\frac{z}{\sin\phi} = -\frac{Z + r\sin\phi}{\sin\phi},\ r_{by} = -r$$

Hence

$$\frac{1}{R_{x,o}} = \frac{1}{r_{ax}} + \frac{1}{r_{bx}} = \frac{1}{r} - \frac{\sin\phi}{Z + r\sin\phi} \tag{2.26}$$

giving $R_{x,o} = r(1 + (r/Z)\sin\phi)$

$$\frac{1}{R_{y,o}} = \frac{1}{r_{ay}} + \frac{1}{r_{by}} = \frac{1}{nr} - \frac{1}{r} \tag{2.27}$$

giving $R_{y,o} = [n/(1 - n)]r$

Elasticity Calculations

If the end load carried by each roller is F, the normal load at each of the inner and outer conjunctions F_ϕ is given by

$$F_\phi = \frac{F}{\cos\phi}$$

Consider a continuously variable-speed drive of the form shown in Figures 13.7 and 13.8 in which

$$F = 16{,}000 \text{ N}$$

$$\phi = 30^\circ$$

$$r = 50 \text{ mm}$$

$$Z = 62.5 \text{ mm}$$

$$n = 0.7$$

$$E = 2.075\text{x}10^{11} \text{ N/m}^2$$

$$\nu = 0.3$$

Then

$$E' = \frac{E}{1 - \nu^2} = \frac{2.075\text{x}10^{11}}{0.91} = 2.28\text{x}10^{11}$$

Inner conjunction:

$$R_{x,i} = 0.05(1 - 0.8 \sin 30^\circ) = 0.03 \text{ m}$$

$$R_{y,i} = \left(\frac{0.7}{1 - 0.7}\right) \text{ x } 0.05 = 0.1167 \text{ m}$$

$$\frac{1}{R} = \frac{1}{0.03} + \frac{1}{0.1167}$$

giving $R = 0.02387$ m

$$\frac{R_{y,i}}{R_{x,i}} = \frac{0.1167}{0.03} = 3.89$$

$$F_\phi = \frac{16{,}000}{\cos 30^\circ} = 18{,}475 \text{ N}$$

$$\bar{\mathscr{E}} = 1.1537 \qquad (3.29)$$

$$\bar{\mathscr{F}} = 2.3459 \qquad (3.30)$$

$$\bar{k} = 2.453 \qquad (3.28)$$

$$a = \left(\frac{6\bar{k}^2\bar{\mathscr{E}}F_\phi R}{\pi E'}\right)^{1/3} = 2949 \ \mu\text{m} \qquad (3.13)$$

$$b = \left(\frac{6\bar{\mathscr{E}}F_{\phi}R}{\pi\bar{k}E'}\right)^{1/3} = 1202\ \mu m \tag{3.14}$$

$$P_{max} = \left(\frac{3F_{\phi}}{2\pi ab}\right) = 2.49\ GN/m^2$$

The Hertzian contact zone is thus represented by a relatively large ellipse in which the ratio of major to minor axes is about 2.45.

Outer conjunction:

$$R_{x,o} = 0.05(1 + 0.8 \sin 30^\circ) = 0.07\ m$$

$$R_{y,o} = \left(\frac{0.7}{1 - 0.7}\right) \times 0.05 = 0.1167\ m$$

$$\frac{1}{R} = \frac{1}{0.07} + \frac{1}{0.1167}$$

giving $R = 0.0438$ m

$$\frac{R_{y,o}}{R_{x,o}} = \frac{0.1167}{0.07} = 1.667$$

$$F_{\phi} = \frac{16,000}{\cos 30^\circ} = 18,475\ N$$

$$\bar{\mathscr{E}} = 1.3583 \tag{3.29}$$

$$\bar{\mathscr{F}} = 1.8355 \tag{3.30}$$

$$\bar{k} = 1.431 \tag{3.28}$$

$$a = \left(\frac{6\bar{k}^2\bar{\mathscr{E}}F_{\phi}R}{\pi E'}\right)^{1/3} = 2662\ \mu m \tag{3.13}$$

$$b = \left(\frac{6F_{\phi}R}{\pi\bar{k}E'}\right)^{1/3} = 1860\ \mu m \qquad (3.14)$$

$$P_{max} = \left(\frac{3F_{\phi}}{2\pi ab}\right) = 1.782\ GN/m^2$$

The greater geometrical conformity at the outer conjunction provides a larger, less-elongated Hertzian contact zone than that developed at the inner conjunction.

Elastohydrodynamic Film Thickness

If it is assumed that the input disc rotates at 314 rad/s (≈3000 rpm) and that the lubricant has an atmospheric-pressure viscosity at the effective operating temperature of 0.0045 N s/m^2 and a viscosity-pressure coefficient of 2.2x10^{-8} m^2/N, then for pure rolling

$$U_i = \frac{\eta_0 u}{E'R_{x,i}} = \frac{0.0045 \times 0.05 \times 314}{2.28\times10^{11} \times 0.03} = 1.0329\times10^{-11}$$

$$U_o = \frac{\eta_0 u}{E'R_{x,o}} = \frac{0.0045 \times 0.05 \times 314}{2.28\times10^{11} \times 0.07} = 0.4427\times10^{-11}$$

$$G = \alpha E' = 5016$$

$$W_i = \frac{F_{\phi}}{E'(R_{x,i})^2} = \frac{18,457}{2.28\times10^{11} \times (0.03)^2} = 0.8995\times10^{-4}$$

$$W_o = \frac{F_{\phi}}{E'(R_{x,o})^2} = \frac{18,457}{2.28\times10^{11} \times (0.07)^2} = 0.1652\times10^{-4}$$

The minimum film thickness in elliptical conjunctions under elastohydrodynamic conditions is given in dimensionless form by

$$H = \frac{h_{min}}{R_x} = 3.63\ U^{0.68} G^{0.49} W^{-0.073} (1 - e^{-0.68k}) \qquad (8.23)$$

Hence

$$H_i = 3.63 \times (1.0329\times10^{-11})^{0.68} \times (5016)^{0.49} \times (0.8995\times10^{-4})^{-0.073} \times (1 - e^{-0.68\times2.453})$$

$$= 3.63 \times 3.385\times10^{-8} \times 65.04 \times 1.9740 \times 0.8114$$

$$= 1.280\times10^{-5}$$

and

$$(h_{min})_i = 0.38\ \mu m$$

Similarly

$$H_o = 3.63 \times (0.4427\times10^{-11})^{0.68} \times (5016)^{0.49} \times (0.1652\times10^{-4})^{-0.073} \times (1 - e^{-0.68\times1.431})$$

$$= 3.63 \times 1.9026\times10^{-8} \times 65.04 \times 2.2340 \times 0.6221$$

$$= 0.6243\times10^{-5}$$

and

$$(h_{min})_o = 0.44\ \mu m$$

The power is thus transmitted through elastohydrodynamic films having minimum film thicknesses at the inner and outer conjunctions of 0.38 and 0.44 μm, respectively. These are quite acceptable film thicknesses, but for maximum life of the

components and a lubrication factor Λ (see equation (3.125)) of 3, it is clear that surface finishes comparable to those achieved in rolling-element bearings are required.

The large axial loads cause substantial, but not excessive, contact pressures of the order of 2.5 and 1.8 GN/m^2 on the inner and outer conjunctions, respectively. The Hertzian contact ellipses are quite large, having major axes of lengths 5898 and 5324 μm at the inner and outer conjunctions. It has been assumed that pure rolling occurs in each conjunction, but there will inevitably be spin losses in these conjunctions. The calculation of these losses, which probably account for most of the energy dissipation in such devices, requires a detailed knowledge of the lubricant rheology and the shape of the elastohydrodynamic film.

13.4 A Railway Wheel Rolling on Wet or Oily Rails

Loads transmitted between locomotives and rails cause Hertzian contacts to be created between the wheels and the rails that are typically of area 10^{-4} m^2. These contacts play a vital role in supporting the loads and providing guidance to the system, as outlined by Barwell (1974), and they are the regions in which traction is developed for driving, accelerating, and braking the train.

A valuable survey of studies of traction between railway wheels and rails has been presented by Pritchard (1981). The considerable variation in coefficients of friction, or traction, has been attributed to varying track and weather conditions. The

coefficients range from about 0.1 to 0.4, and low adhesion is nearly always associated with wet or oily rails. It is well known that light drizzle or mist is associated with low adhesion, and bad sites have been identified where locomotives regularly drip oil or where excessive grease from railside lubricators reaches the rail. The films of contaminants are normally very thin; Pritchard (1981) has quoted thicknesses estimated to be only a few molecular layers. Solid debris is generally associated with low-adhesion films, and rust in the form of oxides and hydrated oxides of iron with silica, iron carbide, and free iron appears to be the major constituent. When autumn leaves fall on the rails and are subsequently crushed by the wheels, a low-friction film is generated which adversely affects traction in woodland areas.

The mode of lubrication by wet, oily, or contaminant films on rails is generally believed to be boundary, but the possibility of elastohydrodynamic action has been considered by Barwell. It is this question that forms the subject of this section.

13.4.1 Hertzian Contacts Between Wheel and Rail

An illustration of the construction of a modern track and locomotive driving wheel presented by Barwell (1974) is shown in Figure 13.9. High-quality steel tires with a thickness of about 76 mm (3 in.) are shrunk onto forged steel wheel centers. An important geometrical feature is the slight coning of the tires to facilitate automatic steering of the wheel sets as they roll along the track. This normally prevents contact between the wheel

flanges and the rail. Studies of the Hertzian contact conditions for this situation have been presented by Barwell (1979) and the Engineering Sciences Data Unit (1978).

In this example it is assumed that the rail section transverse to the direction of rolling has a radius of 0.3 m, that the locomotive wheel has a radius of 0.5 m, and that the angle of coning is 2.86° ($\tan^{-1}0.05$). The essential features of the Hertzian contact between the wheel and the rail are calculated for the following conditions:

Radial load carried by each wheel . . . . . 10^5 N
Modulus of elasticity of wheel tire and rail . . . 2.07×10^{11} N/m^2
Poisson's ratio 0.3

For these conditions

$$E' = \frac{E}{1 - \nu^2} = \frac{2.07\times10^{11}}{0.91} = 2.2747\times10^{11} \text{ N/m}^2$$

Initial Calculation

If the coning of the tires is neglected and the contact is deemed to be equivalent to a wheel in the form of a circular cylinder of radius 0.5 m rolling on a track with a transverse radius of 0.3 m, as shown in Figure 13.10(a),

$$r_{ax} = 0.5 \text{ m}, \; r_{ay} = \infty$$

$$r_{bx} = \infty, \; r_{by} = 0.3 \text{ m}$$

Then

$$\frac{1}{R_x} = \frac{1}{r_{ax}} + \frac{1}{r_{bx}} = \frac{1}{0.5} + \frac{1}{\infty} \tag{2.26}$$

giving $R_x = 0.5$ m, and

$$\frac{1}{R_y} = \frac{1}{r_{ay}} + \frac{1}{r_{by}} = \frac{1}{\infty} + \frac{1}{0.3} \tag{2.27}$$

giving $R_y = 0.3$ m. Also,

$$\frac{1}{R} = \frac{1}{R_x} + \frac{1}{R_y} = \frac{1}{0.5} + \frac{1}{0.3} \tag{2.24}$$

giving $R = 0.1875$ and

$$\frac{R_y}{R_x} = 0.6$$

Since $1/R_x \not> 1/R_y$, it follows at once that the semimajor axis of the elliptical Hertzian contact lies in the direction of rolling.

Now

$$\bar{\mathscr{E}} = 1.0003 + \frac{0.5968}{R_y/R_x} = 1.9950 \tag{3.29}$$

$$\bar{\mathscr{F}} = 1.5277 + 0.6023 \ln \frac{R_y}{R_x} = 1.2200 \tag{3.30}$$

and

$$\bar{k} = 1.0339 \left(\frac{R_y}{R_x}\right)^{0.6360} = 0.7471 \tag{3.28}$$

Hence

$$a = \left(\frac{6\bar{k}^2\bar{\mathscr{E}}FR}{\pi E'}\right)^{1/3} = \left[\frac{6 \times (0.7471)^2 \times 1.9950\text{x}10^5 \times 0.1875}{\pi \times 2.2747\text{x}10^{11}}\right]^{1/3} \tag{3.13}$$

$$= 5.597 \text{ mm}$$

$$b = \left(\frac{6\mathscr{F}FR}{\pi\bar{k}E'}\right)^{1/3} = \left(\frac{6 \times 1.9950\text{x}10^5 \times 0.1875}{\pi \times 0.7471 \times 2.2747\text{x}10^{11}}\right)^{1/3} \tag{3.14}$$

$$= 7.491 \text{ mm}$$

$$\delta = \bar{\mathscr{F}} \left[\left(\frac{9}{2\mathscr{F}R}\right)\left(\frac{F}{\pi\bar{k}E'}\right)^2\right]^{1/3}$$

$$= 1.2200 \left[\left(\frac{9}{2 \times 1.9950 \times 0.1875}\right)\left(\frac{10^5}{\pi \times 0.7471 \times 2.2747\text{x}10^{11}}\right)^2\right]^{1/3}$$

$$= 0.0915 \text{ mm} \tag{3.15}$$

and

$$p_{max} = \frac{3F}{2\pi ab} = 1.139 \text{ GN/m}^2 \tag{3.6}$$

Allowance for Coning

If the angle of coning is taken into consideration, the conjunction is represented by a wheel of truncated conical section rolling on a rail having a transverse curvature. In this case the section of the wheel or truncated cone in the principal plane of rolling is an ellipse, and it is necessary to determine the effective radius of curvature r_{ax} for the situation shown in Figure 13.10(b). Another consequence of coning is that the normal force or reaction on the Hertzian contact is slightly in excess of $1\text{x}10^5$ N.

Now with reference to Figure 13.10(b)

$$F = \frac{W}{\cos\theta} = \frac{1\text{x}10^5}{\cos 2.86^\circ} = 1.00125\text{x}10^5 \text{ N}$$

$$A = r\,\frac{\sin(90^\circ + \theta)}{\sin(90^\circ - 2\theta)} = r\,\frac{\cos\theta}{\cos 2\theta} = 0.5\,\frac{\cos 2.86^\circ}{\cos 5.72^\circ} = 0.501876 \text{ m}$$

$$B = r + A \sin\theta \tan\theta = r\,\frac{\cos^2\theta}{\cos 2\theta} = 0.5\,\frac{\cos^2 2.86^\circ}{\cos 5.72^\circ} = 0.501251 \text{ m}$$

The effective radius

$$r_{ax} = \left\{\frac{[1 + (dy/dx)^2]^{3/2}}{d^2y/dx^2}\right\}_{x=0}$$

and since the ellipse is specified by

$$y = B\left[1 - \left(\frac{x}{A}\right)^2\right]^{1/2}$$

$$\left(\frac{dy}{dx}\right) = -\frac{Bx}{A(A^2 - x^2)^{1/2}}$$

$$\left(\frac{d^2y}{dx^2}\right) = -\frac{AB}{(A^2 - x^2)^{3/2}}$$

Hence

$$r_{ax} = A\left(\frac{A}{B}\right) = 0.501876\left(\frac{0.501876}{0.501251}\right)$$

$$r_{ax} = 0.5025 \text{ m}$$

For this geometrical configuration

$$r_{ax} = 0.5025 \text{ m},\ r_{ay} = \infty$$

$$r_{bx} = \infty,\ r_{by} = 0.3 \text{ m}$$

Hence

$$R_x = 0.5025 \text{ m},\ R_y = 0.3 \text{ m}$$

$$(R_y/R_x) = 0.5970,\ R = 0.18785$$

$$\bar{\mathscr{E}} = 1.0003 + \frac{0.5968}{R_y/R_x} = 2.0000 \qquad (3.29)$$

$$\bar{\mathscr{F}} = 1.5277 + 0.6023 \ln (R_y/R_x) = 1.2170 \qquad (3.30)$$

and

$$\bar{k} = 1.0339 \left(\frac{R_y}{R_x}\right)^{0.6360} = 0.7447 \qquad (3.28)$$

Hence

$$a = \left(\frac{6\bar{k}^2\bar{\mathscr{E}}FR}{\pi E'}\right)^{1/3} = \left[\frac{6 \times (0.7447)^2 \times 2.0000 \times 1.00125\text{x}10^5 \times 0.18785}{\pi \times 2.2747\text{x}10^{11}}\right]^{1/3}$$

$$= 5.595 \text{ mm} \qquad (3.13)$$

$$b = \left(\frac{6\bar{\mathscr{E}}FR}{\pi \bar{k} E'}\right)^{1/3} = \left(\frac{6 \times 2.0000 \times 1.00125\text{x}10^5 \times 0.18785}{\pi \times 0.7447 \times 2.2747\text{x}10^{11}}\right)^{1/3} \qquad (3.14)$$

$$= 7.513 \text{ mm}$$

$$\delta = \bar{\mathscr{F}} \left[\left(\frac{9}{2\bar{\mathscr{E}}R}\right)\left(\frac{F}{\pi \bar{k} E'}\right)^2\right]^{1/3}$$

$$= 1.2170 \left[\left(\frac{9}{2 \times 2.0000 \times 0.18785}\right)\left(\frac{1.00125\text{x}10^5}{\pi \times 0.7447 \times 2.2747\text{x}10^{11}}\right)^2\right]^{1/3}$$

$$= 0.0914 \text{ mm} \qquad (3.15)$$

and

$$p_{max} = \frac{3F}{2\pi ab} = 1.137 \text{ GN/m}^2 \qquad (3.6)$$

The values of a, b, δ, and p_{max} are remarkably similar to the values that emerged when the simplified configuration of a circular cylinder on a rail was considered. Thus it is therefore unnecessary to consider the actual but more complicated geometry of the Hertzian contact introduced by coning of the wheels.

13.4.2 Minimum Film Thickness Between Wheel and Rail

The film thickness is calculated for two lubricants, one being water and the other a mineral oil, as a function of speed.

Water

The viscosity of water varies little with pressure, and the fluid is generally assumed to be isoviscous. However, Hersey and Hopkins (1954) have recorded a 7 percent increase in the viscosity of water over a pressure range of 1000 atmospheres at 38° C (100° F), and this corresponds to a viscosity-pressure coefficient α of 6.68×10^{-10} m^2/N.

It is thus possible to adopt this value of α and to calculate the minimum film thickness on the basis of the equation used earlier in this Chapter.

$$H_{min} = \frac{h_{min}}{R_x} = 3.63\ U^{0.68} G^{0.49} W^{-0.073} (1 - e^{-0.68k}) \qquad (8.23)$$

It will be assumed that the coefficient of viscosity of water under atmospheric conditions η_0 is 0.001 N s/m^2 and hence that

$$U = \frac{\eta_0 u}{E' R_x} = \frac{10^{-3}\ u}{2.2747 \times 10^{11} \times 0.5} = 8.7924\ u \times 10^{-15}$$

$$G = \alpha E' = 6.68 \times 10^{-10} \times 2.2747 \times 10^{11} = 152$$

$$W = \frac{F}{E'(R_x)^2} = \frac{10^5}{2.2747 \times 10^{11} \times (0.5)^2} = 1.7585 \times 10^{-6}$$

With $\overline{k} = 0.7471$ we find

$$H_{min} = \frac{h_{min}}{R_x} = 3.63 \times (8.7924\ u \times 10^{-15})^{0.68} \times (152)^{0.49}$$

$$\times (1.7584 \times 10^{-6})^{-0.073} \times (1 - e^{-0.5080})$$

$$= 3.63 \times 2.7669 \times 10^{-10} \times 11.7247 \times 2.6309 \times 0.3983$$

$$\times u^{0.68}$$

or

$$(H_{min})_{water} = 1.2341 \times u^{0.68} \times 10^{-8}\ m$$

and

$$(h_{min})_{water} = 0.6170\ u^{0.68} \times 10^{-8}\ m$$

Oil

If the rail is covered by a film of oil having a coefficient of viscosity at atmospheric pressure η_0 of 0.1 N s/m^2 and a viscosity-pressure coefficient α of 2.2×10^{-8} m^2/N.

$$U = \frac{\eta_0 u}{E' R_x} = \frac{0.1\ u}{2.2747 \times 10^{11} \times 0.5} = 8.7924\ u \times 10^{-13}$$

$$G = \alpha E' = 2.2 \times 10^{-8} \times 2.2747 \times 10^{11} = 5004$$

$$W = \frac{F}{E'(R_x)^2} = \frac{10^5}{2.2747 \times 10^{11} \times (0.5)^2} = 1.7584 \times 10^{-6}$$

Hence

$$H_{min} = \frac{h_{min}}{R_x} = 3.63 \times (8.7924\ u \times 10^{-13})^{0.68} \times (5004)^{0.49}$$

$$\times (1.7584 \times 10^{-6})^{-0.073} \times (1 - e^{-0.5080})$$

$$= 3.63 \times 6.3386 \times 10^{-9} \times 64.96 \times 2.6309 \times 0.3983 \times u^{0.68}$$

or

$$(H_{min})_{oil} = 1.5662 \times u^{0.68} \times 10^{-6}$$

and

$$(h_{min})_{oil} = 0.7831\ u^{0.68} \times 10^{-6}\ m$$

The variation of h_{min} with the speed of the locomotive in pure rolling for both wet and oily rails is shown in Figure 13.11. It is clear from Figure 13.11(a) that the elastohydrodynamic films developed by water alone are quite thin, and it is most unlikely that they will lead to effective hydrodynamic lubrication. The fact that moisture is known to influence traction quite markedly (Pritchard, 1981) probably strengthens the view that surface chemistry and boundary lubrication play important roles in wheel-rail adhesion.

For an oily track and a relatively high viscosity of 0.1 N s/m^2 substantial film thicknesses are predicted for representative operating speeds. Clearly traction will be reduced and skidding can be expected under these conditions. The results presented in Figure 13.11(b) confirm the importance of a clean track.

A number of alternative procedures for cleaning the rails in front of the driving wheels of locomotives are now being investigated in several countries.

13.5 Lubrication of Synovial Joints

To conclude this Chapter of applications of the elastohydrodynamic film thickness equations developed in the text we have selected the problem of human joint lubrication. This also allows us to introduce equations developed in Chapter 11 for the lubrication of elastic solids by isoviscous lubricants.

It has to be stated at the outset that film thickness calculations for synovial joints are more speculative than the other calculations presented in this Chapter for engineering components. The properties of the materials, the magnitude of the applied load, and the motion and geometry of the contacting solids are all subject to debate. Indeed, the mechanism of lubrication of these remarkable bearings has yet to be resolved.

Features of Synovial Joints

The essential features of a synovial joint are shown in Figure 13.12. The bearing material is known as articular cartilage and the lubricant as synovial fluid. The articular cartilage is a soft, porous material mounted on a relatively hard bone backing. The thickness of the cartilage in a synovial joint

varies from joint to joint and also with age. In young, healthy subjects it may be several millimeters thick, but in elderly subjects it may be almost nonexistent in some regions.

Articular cartilage appears to be smooth, but measurements suggest that the surface roughness R_a varies from about 1 μm to 3 μm. The effective modulus of elasticity varies with the time of loading and is difficult to specify with certainty. The various measurements that have been reported suggest that E normally lies in the range 10^7 to 10^9 N/m^2.

Synovial fluid is a non-Newtonian fluid in which the effective viscosity falls markedly as the shear rate increases. The viscous properties of the fluid appear to be governed by the hyaluronic acid, with the viscosity increasing almost linearly with the concentration of the acid. It is also known that the viscosity of synovial fluid from normal, healthy joints is greater than that of pathological synovial fluid from both osteoarthritic and rheumatoid arthritic joints.

At low shear rates the viscosity of normal synovial fluid is typically about 10 N s/m^2, while at the high shear rates encountered in joints values between 10^{-3} N s/m^2 and 10^{-2} N s/m^2 can be expected.

The effective radius of curvature of an equivalent sphere or cylinder near a plane is also difficult to determine, but probably ranges from 0.1 to 1.0 m in the hip and 0.02 to 0.1 m in the knee. Loads on the joints in the lower limb vary during walking, and the human bearings are thus subjected to dynamic conditions in

which both loads and sliding speeds vary with time. When the leg swings freely in the walking cycle the knee and the hip carry loads in the range zero to one times body weight, whereas when the leg is in contact with the ground (stance phase) the peak loads range from three to seven times body weight.

The Hip

There is a negligible variation in viscosity of synovial fluid with pressure over the range of pressures encountered in synovial joints. The articular cartilage deforms readily under physiological loads, and the mode of lubrication can thus be regarded as isoviscous-elastic. The following expression was developed in Chapter 11 for the minimum film thickness under these conditions:

$$H_{min} = 7.43\ U^{0.65} W^{-0.21} (1 - 0.85\ e^{-0.31k}) \qquad (11.4)$$

The hip joint is generally represented as a ball (femoral head) and socket (acetabulum) joint. In the present example it is assumed that the following quantities are typical of the peak loading periods of the stance phase in walking:

Radius of equivalent sphere near a plane . . . . . 1 m

Coefficient of viscosity of synovial fluid . . . . . 2×10^{-3} N s/m^2

Elastic constant, E' . . . . . 10^7 N/m^2

Entraining velocity, $u = (u_a + u_b)/2$ . . . . . 0.075 m/s

Applied load . . . . . 4500 N

Then

$$U = \frac{\eta_0 u}{E' R_x} = \frac{2\text{x}10^{-3} \text{ x } 0.075}{10^7 \text{x} 1} = 1.5\text{x}10^{-11}$$

$$W = \frac{F}{E'(R_x)^2} = \frac{4500}{10^7 \text{x} 1} = 4.5\text{x}10^{-4}$$

and

$$k = 1$$

Hence

$$H_{min} = 7.43 \text{ x } (1.5\text{x}10^{-11})^{0.65} \text{ x } (4.5\text{x}10^{-4})^{-0.21} \text{ x } (1 - 0.85\ e^{-0.31})$$

$$= 7.43 \text{ x } 9.2142\text{x}10^{-8} \text{ x } 5.0446 \text{ x } 0.3766$$

$$= 1.3006\text{x}10^{-6}$$

and

$$h_{min} = 1.3\ \mu m$$

The calculation yields a film thickness similar to, but perhaps slightly less than, the roughness of articular cartilage. This suggests that prolonged exposure to the listed conditions could not conserve effective elastohydrodynamic lubrication. Dowson (1981) has discussed the question of lubrication in hip joints in some detail, and it emerges that if any hydrodynamic films are developed during the swing phase in walking, they might be preserved by a combination of entraining and squeeze-film action during the stance phase.

13.6 Closure

In this final chapter a number of applications of the elastohydrodynamic film thickness expressions developed earlier in the text have been considered. In Section 13.1 the motion of a steel ball over steel surfaces presenting varying degrees of conformity was examined. This provided an opportunity to demonstrate the nature of Hertzian contact calculations before proceeding to the calculation of film thickness under various modes of fluid-film lubrication. The approximate procedures outlined for the elasticity calculations are sufficiently accurate and yet enjoy great economy in effort for most applications.

The equation for minimum film thickness in elliptical conjunctions under elastohydrodynamic conditions developed in Chapter 8 was then applied to roller and ball bearings in Section 13.2. The roller bearing presents a nominal line contact and thus represents a limiting condition for the application of the elliptical-contact equation. The example nevertheless demonstrates the generality of the film thickness equations presented in Chapter 8. The influence of lubricant starvation on minimum film thickness was also introduced in this Section. It was found that the most critical conjunctions in both ball and roller bearings occurred between the rolling elements and the inner tracks. The lubrication factor Λ, which appears to play an important role in determining the fatigue life of highly stressed,

lubricated machine elements, was also introduced in Section 13.2. In former times film thicknesses in elliptical elastohydrodynamic conjunctions were calculated from modified line-contact equations, and the validity of such procedures related to equivalent mean or maximum contact stresses was explored in relation to the deep-groove ball bearing example.

A second nominal line-contact situation in the form of an involute gear was introduced in Section 13.3, and it was again found that the elliptical conjunction expression yielded a conservative estimate of the minimum film thickness. Continuously variable-speed drives like the Perbury gear, which present truly elliptical elastohydrodynamic conjunctions, are increasingly finding favor in mobile and static machinery. A representative elastohydrodynamic condition for this class of machinery is considered in Section 13.3 for power transmission equipment.

The possibility of elastohydrodynamic films of water or oil forming between locomotive wheels and rails was examined in Section 13.4. The important subject of traction on the railways is attacting considerable attention in various countries at the present time.

The final example of a synovial joint introduced the equation developed in Chapter 8 for isoviscous-elastic regimes of lubrication. This example is necessarily more speculative than others in this Chapter owing to the varied and uncertain conditions encountered in human and animal joints. Other applications in the isoviscous-elastic regime include rubber tires

on wet roads and elastomeric seals. This range of applications serves to demonstrate the utility of the film thickness equations developed in this text for elastohydrodynamic elliptical conjunctions. It is hoped that this study of elliptical conjunctions has extended in some measure the understanding of that recently recognized yet vitally important mode of lubrication in highly stressed machine elements known as "elastohydrodynamic."

SYMBOLS

A	constant used in equation (3.113)
$A^*, B^*, C^*, D^*, L^*, M^*$	relaxation coefficients
A_v	drag area of ball, m^2
a	semimajor axis of contact ellipse, m
$\bar{a}$	$a/2\bar{m}$
B	total conformity of bearing
b	semiminor axis of contact ellipse, m
$\bar{b}$	$b/2\bar{m}$
C	dynamic load capacity, N
C_v	drag coefficient
$C_1,\ldots,C_8$	constants
c	19,609 N/cm^2 (28,440 lbf/in^2)
$\bar{c}$	number of equal divisions of semimajor axis
D	distance between race curvature centers, m
$\tilde{D}$	material factor
$\bar{D}$	defined by equation (5.63)
De	Deborah number
d	ball diameter, m
$\bar{d}$	number of divisions in semiminor axis
d_a	overall diameter of bearing (Figure 2.13), m
d_b	bore diameter, m
d_e	pitch diameter, m
d'_e	pitch diameter after dynamic effects have acted on ball, m
d_i	inner-race diameter, m
d_o	outer-race diameter, m

E	modulus of elasticity, N/m^2
E'	effective elastic modulus, $2\Big/\left(\frac{1-\nu_a^2}{E_a}+\frac{1-\nu_b^2}{E_b}\right)$, N/m^2
E_a	internal energy, m^2/s^2
$\tilde{E}$	processing factor
E_1	$[(\tilde{H}_{min} - H_{min})/H_{min}] \times 100$
$\mathscr{E}$	elliptic integral of second kind with modulus $(1 - 1/k^2)^{1/2}$
$\bar{\mathscr{E}}$	approximate elliptic integral of second kind
e	dispersion exponent
F	normal applied load, N
F^*	normal applied load per unit length, N/m
$\tilde{F}$	lubrication factor
$\bar{F}$	integrated normal applied load, N
F_c	centrifugal force, N
F_{max}	maximum normal applied load (at $\psi = 0$), N
F_r	applied radial load, N
F_t	applied thrust load, N
F_ψ	normal applied load at angle ψ, N
$\mathscr{F}$	elliptic integral of first kind with modulus $(1 - 1/k^2)^{1/2}$
$\bar{\mathscr{F}}$	approximate elliptic integral of first kind
f	race conformity ratio
f_b	rms surface finish of ball, m
f_r	rms surface finish of race, m
G	dimensionless materials parameter, αE
G^*	fluid shear modulus, N/m^2
$\tilde{G}$	hardness factor
g	gravitational constant, m/s^2

g_E	dimensionless elasticity parameter, $W^{8/3}/U^2$
g_V	dimensionless viscosity parameter, GW^3/U^2
H	dimensionless film thickness, h/R_x
$\hat{H}$	dimensionless film thickness, $H(W/U)^2 = F^2h/u^2\eta_0^2R_x^3$
H_c	dimensionless central film thickness, h_c/R_x
$H_{c,s}$	dimensionless central film thickness for starved lubrication condition
H_f	frictional heat, N m/s
H_{min}	dimensionless minimum film thickness obtained from EHL elliptical-contact theory
$H_{min,r}$	dimensionless minimum film thickness for a rectangular contact
$H_{min,s}$	dimensionless minimum film thickness for starved lubrication condition
$\tilde{H}_c$	dimensionless central film thickness obtained from least-squares fit of data
$\tilde{H}_{min}$	dimensionless minimum film thickness obtained from least-squares fit of data
$\bar{H}_c$	dimensionless central-film-thickness - speed parameter, $H_cU^{-0.5}$
$\bar{H}_{min}$	dimensionless minimum-film-thickness - speed parameter, $H_{min}U^{-0.5}$
$\bar{H}_0$	new estimate of constant in film thickness equation
h	film thickness, m
h_c	central film thickness, m
h_i	inlet film thickness, m

h_m	film thickness at point of maximum pressure, where $dp/dx = 0$, m
h_{min}	minimum film thickness, m
h_0	constant, m
I_d	diametral interference, m
I_p	ball mass moment of inertia, m N s^2
I_r	integral defined by equation (3.76)
I_t	integral defined by equation (3.75)
J	function of k defined by equation (3.8)
J*	mechanical equivalent of heat
$\bar{J}$	polar moment of inertia, m N s^2
K	load-deflection constant
k	ellipticity parameter, a/b
$\bar{k}$	approximate ellipticity parameter
$\tilde{k}$	thermal conductivity, N/s °C
k_f	lubricant thermal conductivity, N/s °C
L	fatigue life
L_a	adjusted fatigue life
L_t	reduced hydrodynamic lift, from equation (6.21)
$L_1,\ldots,L_4$	lengths defined in Figure 3.11, m
L_{10}	fatigue life where 90 percent of bearing population will endure
L_{50}	fatigue life where 50 percent of bearing population will endure
ℓ	bearing length, m
$\bar{\ell}$	constant used to determine width of side-leakage region
M	moment, Nm

M_g	gyroscopic moment, Nm
M_p	dimensionless load-speed parameter, $WU^{-0.75}$
M_s	torque required to produce spin, N m
m	mass of ball, N s^2/m
m*	dimensionless inlet distance at boundary between fully flooded and starved conditions
$\tilde{m}$	dimensionless inlet distance (Figures 7.1 and 9.1)
$\bar{m}$	number of divisions of semimajor or semiminor axis
m_W	dimensionless inlet distance boundary as obtained from Wedeven, et al. (1971)
N	rotational speed, rpm
n	number of balls
n*	refractive index
$\bar{n}$	constant used to determine length of outlet region
P	dimensionless pressure
P_D	dimensionless pressure difference
P_d	diametral clearance, m
P_e	free endplay, m
P_{Hz}	dimensionless Hertzian pressure, N/m^2
p	pressure, N/m^2
p_{max}	maximum pressure within contact, $3F/2\pi ab$, N/m^2
$p_{iv,as}$	isoviscous asymptotic pressure, N/m^2
Q	solution to homogeneous Reynolds equation
Q_m	thermal loading parameter
$\bar{Q}$	dimensionless mass flow rate per unit width, $q\eta_0/\rho_0 E'R^2$
q_f	reduced pressure parameter
q_x	volume flow rate per unit width in x direction, m^2/s

q_y	volume flow rate per unit width in y direction, m^2/s
R	curvature sum, m
R_a	arithmetical mean deviation defined in equation (4.1), m
R_c	operational hardness of bearing material
R_x	effective radius in x direction, m
R_y	effective radius in y direction, m
r	race curvature radius, m
$\left.\begin{matrix} r_{ax}, r_{bx}, \\ r_{ay}, r_{by} \end{matrix}\right\}$	radii of curvature, m
r_c, ϕ_c, z	cylindrical polar coordinates
r_s, θ_s, ϕ_s	spherical polar coordinates
$\bar{r}$	defined in Figure 5.4
S	geometric separation, m
S^*	geometric separation for line contact, m
S_0	empirical constant
s	shoulder height, m
T	τ_0/p_{max}
$\tilde{T}$	tangential (traction) force, N
T_m	temperature, °C
T_b^*	ball surface temperature, °C
T_f^*	average lubricant temperature, °C
ΔT^*	ball surface temperature rise, °C
T_1	$(\tau_0/p_{max})_{k=1}$
T_v	viscous drag force, N
t	time, s
t_a	auxiliary parameter
u_B	velocity of ball-race contact, m/s

u_c	velocity of ball center, m/s
U	dimensionless speed parameter, $\eta_0 u/E'R_x$
u	surface velocity in direction of motion, $(u_a + u_b)/2$, m/s
$\bar{u}$	number of stress cycles per revolution
Δu	sliding velocity, $u_a - u_b$, m/s
v	surface velocity in transverse direction, m/s
W	dimensionless load parameter, $F/E'R^2$
w	surface velocity in direction of film, m/s
X	dimensionless coordinate, x/R_x
Y	dimensionless coordinate, y/R_x
X_t, Y_t	dimensionless grouping from equation (6.14)
X_a, Y_a, Z_a	external forces, N
Z	constant defined by equation (3.48)
Z_1	viscosity pressure index, a dimensionless constant
$x, \tilde{x}, \bar{x}, \bar{x}_1$	coordinate system
$y, \tilde{y}, \bar{y}, \bar{y}_1$	coordinate system
$z, \tilde{z}, \bar{z}, \bar{z}_1$	coordinate system
α	pressure-viscosity coefficient of lubrication, m^2/N
α_a	radius ratio, R_y/R_x
β	contact angle, rad
β_f	free or initial contact angle, rad
β'	iterated value of contact angle, rad
Γ	curvature difference
γ	viscous dissipation, N/m^2 s
$\dot{\gamma}$	total strain rate, s^{-1}
$\dot{\gamma}_e$	elastic strain rate, s^{-1}
$\dot{\gamma}_v$	viscous strain rate, s^{-1}

γ_a	flow angle, deg
δ	total elastic deformation, m
δ^*	lubricant viscosity temperature coefficient, $^oC^{-1}$
δ_D	elastic deformation due to pressure difference, m
δ_r	radial displacement, m
δ_t	axial displacement, m
δ_x	displacement at some location x, m
$\bar{\delta}$	approximate elastic deformation, m
$\tilde{\delta}$	elastic deformation of rectangular area, m
ϵ	coefficient of determination
ϵ_1	strain in axial direction
ϵ_2	strain in transverse direction
ζ	angle between ball rotational axis and bearing centerline (Figure 3.10)
ζ_a	probability of survival
η	absolute viscosity at gauge pressure, N s/m^2
$\bar{\eta}$	dimensionless viscosity, η/η_0
η_0	viscosity at atmospheric pressure, N s/m^2
η_∞	6.31×10^{-5} N s/m^2(0.0631 cP)
θ	angle used to define shoulder height
Λ	film parameter (ratio of film thickness to composite surface roughness)
λ	equals 1 for outer-race control and 0 for inner-race control
λ_a	second coefficient of viscosity
λ_b	Archard-Cowking side-leakage factor, $(1 + 2/3\ \alpha_a)^{-1}$
λ_c	relaxation factor

μ	coefficient of sliding friction
μ^*	$\bar{\rho}/\bar{\eta}$
ν	Poisson's ratio
ξ	divergence of velocity vector, $(\partial u/\partial x) + (\partial v/\partial y) + (\partial w/\partial z)$, s^{-1}
ρ	lubricant density, N s^2/m^4
$\bar{\rho}$	dimensionless density, ρ/ρ_0
ρ_0	density at atmospheric pressure, N s^2/m^4
σ	normal stress, N/m^2
σ_1	stress in axial direction, N/m^2
τ	shear stress, N/m^2
τ_0	maximum subsurface shear stress, N/m^2
$\tilde{\tau}$	shear stress, N/m^2
$\tilde{\tau}_e$	equivalent stress, N/m^2
$\tilde{\tau}_L$	limiting shear stress, N/m^2
Φ	ratio of depth of maximum shear stress to semiminor axis of contact ellipse
Φ^*	$PH^{3/2}$
Φ_1	$(\Phi)_{k=1}$
ϕ	auxiliary angle
ϕ_T	thermal reduction factor
ψ	angular location
ψ_ℓ	limiting value of ψ
Ω_i	absolute angular velocity of inner race, rad/s
Ω_o	absolute angular velocity of outer race, rad/s
ω	angular velocity, rad/s
ω_B	angular velocity of ball-race contact, rad/s
ω_b	angular velocity of ball about its own center, rad/s

ω_c	angular velocity of ball around shaft center, rad/s
ω_s	ball spin rotational velocity, rad/s

Subscripts:

a	solid a
b	solid b
c	central
bc	ball center
IE	isoviscous-elastic regime
IR	isoviscous-rigid regime
i	inner race
K	Kapitza
min	minimum
n	iteration
o	outer race
PVE	piezoviscous-elastic regime
PVR	piezoviscous-rigid regime
r	for rectangular area
s	for starved conditions
x,y,z	coordinate system

Superscript:

$(\overline{})$	approximate

REFERENCES

Abbott, E. J. and Firestone, F. A. (1933) Specifying Surface Quality, Mech. Eng., 55, 569-572.

Agricola, G. (1556) De Re Metallica, Basel.

Aihara, S. and Dowson, D. (1979) "A Study of Film Thickness in Grease Lubricated Elastohydrodynamic Contacts," Proceedings of Fifth Leeds-Lyon Symposium on Tribology on 'Elastohydrodynamics and Related Topics', D. Dowson, C. M. Taylor, M. Godet, and D. Berthe, eds., Mechanical Engineering Publications, Ltd., 104-115.

Allan, R. K. (1945) Rolling Bearings, Sir Isaac Pitman & Sons, London.

Alsaad, M., Bair, S., Sanborn, D. M., and Winer, W. O. (1978) "Glass Transitions in Lubricants: Its Relation to Elastohydrodynamic Lubrication (EHD)," J. Lubr. Technol., 100(3), 404-417.

Amontons, G. (1699) "De la resistance caus'ee dans les machines," Memoires de l'Academie Royal, A, Chez Gerard Kuyper, Amsterdam, 1706, 257-282.

Anderson, W. J. (1978) "The Practical Impact of Elastohydrodynamic Lubrication," Proceedings of Fifth Leeds-Lyon Symposium on Tribology on 'Elastohydrodynamics and Related Topics,' D. Dowson, C. M. Taylor, M. Godet, and D. Berthe, eds., Mechanical Engineering Publications, Ltd., 217-226.

Anderson, W. J. and Zaretsky, E. V. (1968) "Rolling-Element Bearings." Mach. Des. (Bearing Reference Issue), 40(14), 22-39.

Anderson, W. J. and Zaretsky, E. V. (1973) "Rolling-Element Bearings - A Review of the State of the Art," Tribology Workshop sponsored by National Science Foundation, Atlanta, Ga., Oct. 19-20, 1972.

Archard, J. F. (1968) "Non-Dimensional Parameters in Isothermal Theories of Elastohydrodynamic Lubrication." J. Mech. Eng. Sci., 10(2), 165-167.

Archard, J. F. and Cowking, E. W. (1965-66) "Elastohydrodynamic Lubrication at Point Contacts," Proc. Inst. Mech. Eng., London, 180(3B), 47-56.

Archard, J. F. and Kirk, M. T. (1961) "Lubrication at Point Contacts" Proc. R. Soc. London, Ser. A, 261, 532-550.

Archard, J. F. and Kirk, M. T. (1964) "Film Thickness for a Range of Lubricants Under Severe Stress," J. Mech. Eng. Sci., 6, 101-102.

Ausherman, V. K., Nagaraj, H. S., Sanborn, D. M., and Winer, W. O. (1976) "Infrared Temperature Mapping in Elastohydrodynamic Lubrication," J. Lubr. Technol., 98(2), 236-243.

Baglin, K. P. and Archard, J. F. (1972) "An Analytic Solution of the Elastohydrodynamic Lubrication of Materials of Low Elastic Modulus," Proceedings of Second Symposium on Elastohydrodynamic Lubrication, Institution of Mechanical Engineers, London, 13.

Bair, S. and Winer, W. (1979) "Shear Strength Measurements of Lubricants at High Pressures," J. Lubr. Technol. 101(3), 251-257.

Bamberger, E. N. (1967) "The Effect of Ausforming on the Rolling Contact Fatigue Life of a Typical Bearing Steel," J. Lubr. Technol., 89(1), 63-75.

Bamberger, E. N. (1972) "The Thermomechanical Working of Electro-Slag Melted M-50 Bearing Steel," R72AEG290, General Electric Co., Cincinnati, Ohio.

Bamberger, E. N., Harris, T. A., Kacmarsky, W. M., Moyer, C. A., Parker, R. J., Sherlock, J. J., and Zaretsky, E. V. (1971) Life Adjustment Factors for Ball and Roller Bearings. American Society of Mechanical Engineers, New York.

Bamberger, E. N., Zaretsky, E. V., and Singer, H. (1976) "Endurance and Failure Characteristics of Main-Shaft Jet Engine Bearing at $3x10^6$DN," J. Lubr. Technol., 98(4), 580-585.

Barus, C. (1893) "Isotherms, Isopiestics, and Isometrics Relative to Viscosity," Am. J. Sci., 45, 87-96.

Barwell, F. T. (1974) "The Tribology of Wheel on Rail," Tribol. Int., 7, (4), 146-150.

Barwell, F. T. (1979) "Bearing Systems - Principles and Practice," Oxford University Press, Oxford.

Bell, J. C. and Kannel, J. W. (1970) "Simulation of Ball-Bearing Lubrication with a Rolling-Disk Apparatus," J. Lubr. Technol., 92, 1-15.

Bell, J. C., Kannel, J. W., and Allen, C. M. (1964) "The Rheological Behaviour of the Lubricant in the Contact Zone of a Rolling Contact System," J. Basic Eng., 86(3), 423-432.

Bisson, E. E. and Anderson, W. J. (1964) "Advanced Bearing Technology," NASA SP-38.

Biswas, S. and Snidle, R. W. (1976) "Elastohydrodynamic Lubrication of Spherical Surfaces of Low Elastic Modulus," J. Lubr. Technol., 98(4), 524-529.

Blok, H. (1952) Discussion of paper by E. McEwen. Gear Lubrication Symposium. Part I. The Lubrication of Gears, J. Inst. Petrol., 38, 673.

Blok, H. (1965) "Inverse Problems in Hydrodynamic Lubrication and Design Directives for Lubricated Flexible Surfaces," Proceedings of International Symposium on Lubrication and Wear, D. Muster and B. Sternlicht, eds., McCutchan, Berkeley, 1-151.

Brewe, D. E., Coe, H. H., and Scibbe, H. W. (1969) "Cooling Studies with High-Speed Ball Bearings Operating in Cool Hydrogen Gas," Trans. ASLE, vol. 12, 66-76.

Brewe, D. E. and Hamrock, B. J. (1977) "Simplified Solution for Elliptical-Contact Deformation Between Two Elastic Solids," J. Lubr. Technol. 99(4), 485-487.

Brewe, D. E., Hamrock, B. J., and Taylor, C. M. (1979) "Effect of Geometry on Hydrodynamic Film Thickness," J. Lubr. Technol., 101(2), 231-239.

Brown, P. F. and Potts, J. R. (1977) "Evaluation of Powder Processed Turbine Engine Ball Bearings," PWA-FR-8481, Pratt & Whitney Aircraft Group, West Palm Beach, Fla. (AFAPL-TR-77-26.)

Cameron, A. (1954) "Surface Failure in Gears," J. Inst. Petrol., vol. 40, 191.

Cameron, A. (1966) The Principles of Lubrication, Wiley, New York.

Cameron, A. and Gohar, R. (1966) "Theoretical and Experimental Studies of the Oil Film in Lubricated Point Contact," Proc. R. Soc. London, Ser. A., 291, 520-536.

Carburi, M. (1777) "Monument Elévé a la Gloire de Pierre-le-Grand, ou Relation Des Travaux et des Moyens Mechaniques Qui ont été employés pour transporter à Petersbourg un Rocher de trois millions pesant, destiné à servir de base à la Statue équestre de cet Empereur; avec un Examen Physique et Chymique de meme Rocher," Paris, (Bookseller: Nyon âiné, Libraine, rue Saint-Lean-de-Beauvois; Printer: Imprimeur-Librairé, rue de la Harpe, vis-à-vis la rue S. Severin).

Castle, P. and Dowson, D. (1972) "A Theoretical Analysis of the Starved Contact," Proceedings of Second Symposium on Elastohydrodynamic Lubrication, Institution of Mechanical Engineers, London, 131.

Cheng, H. S. (1967) "Calculation of Elastohydrodynamic Film Thickness in High-Speed Rolling and Sliding Contacts," Mechanical Technology Technical Report MTI-67TR24, May 1967.

Cheng, H. S. (1970) "A Numerical Solution to the Elastohydrodynamic Film Thickness in an Elliptical Contact," J. Lubr. Technol., 92(1), 155-162.

Cheng, H. S. and Orcutt, F. K. (1965-66) "A Correlation Between the Theoretical and Experimental Results on the Elastohydrodynamic Lubrication of Rolling and Sliding Contacts," Elastrohydrodynamic Lubrication, Symposium, Leeds, England, Sept. 21-23, 1965, General Papers. Institution of Mechanical Engineers, London, 111-121.

Cheng, H. S. and Sternlicht, B. (1964) "A Numerical Solution for the Pressure, Temperature, and Film Thickness Between Two Infinitely Long, Lubricated Rolling and Sliding Cylinders, Under Heavy Loads," J. Basic Eng. 87(3), 695-707.

Chiu, Y. P. (1974) "An Analysis and Prediction of Lubricant Film Starvation in Rolling Contact Systems," ASME Trans., 17(1), 22-35.

Clark, R. H. (1938) "Earliest Known Ball Thrust Bearing Used in Windmill," English Mechanic, 30 (Dec.) 223.

Coulomb, C. A. (1785) "Théorie des Machines Simples, en ayant égard au frottement de leur parties, et a la roideur des cordages," Academic Royale des Sciences, Mem. Math. Phys., X, Paris, 161-342.

Crook, A. W. (1957) "Simulated Gear-Tooth Contact: Some Experiments Upon Their Lubrication and Sub-Surface Deformation," Proc. Inst. Mech. Eng., London, 171, 187.

Crook, A. W. (1958) "The Lubrication of Rollers, I," Phil. Trans. R. Soc. London, Ser. A, 250, 387-409.

Crook, A. W. (1961) "Elasto-Hydrodynamic Lubrication of Rollers, Nature," 190, 1182.

Crook, A. W. (1963) "The Lubrication of Rollers, IV - Measurements of Friction and Effective Viscosity," Phil. Trans. R. Soc. London, Ser. A, 255, 281-312.

Dalmaz, G. and Godet, M. (1973) "Traction, Load, and Film Thickness in Lightly Loaded Lubricated Point Contacts," J. Mech. Eng. Sci., 15(6), 400-409.

Dalmaz, G. and Godet, M. (1978) "Film Thickness and Effective Viscosity of Some Fire Resistant Fluids in Sliding Point Contacts," J. Lubr. Technol., 100(2), 304-308.

Denhard, W. G. (1966) "Cost Versus Value of Ball Bearings," Gyro-Spin Axis Hydrodynamic Bearing Symposium, Vol. II, Ball Bearings. Massachusetts Institute of Technology, Cambridge, Mass., Tab. 1.

Desaguliers, J. T. (1734) A Course of Experimental Philosophy, 2 Volumes, London, Volume I, with 32 copper plates.

Dowson, D. (1962) "A Generalized Reynolds Equation for Fluid-Film Lubrication," Int. J. Mech. Sci., 4, 159-170.

Dowson, D. (1965) "Elastohydrodynamic Lubrication - An Introduction and a Review of Theoretical Studies," Institute of Mechanical Engineers, London, Paper R1, 7-15.

Dowson, D. (1968) "Elastohydrodynamics," Proc. Inst. Mech. Eng., London, 182(3A), 151-167.

Dowson, D. (1975) "The Inlet Boundary Condition," Cavitation and Related Phenomena in Lubrication. D. Dowson, M. Godet, and C. M. Taylor, eds., Mechanical Engineering Publications, Ltd., New York, 143-152.

Dowson, D. (1976) "The Origins of Rolling Contact Bearings," T. Sakuri, ed., Proceedings of JSLE-ASLE International Lubrication Conference, Elsevier, Amsterdam, 20-38.

Dowson, D. (1979) History of Tribology, Longman, London and New York.

Dowson, D. (1981) "Lubrication of Joints," Chapter 13 in "The Biomechanics of Joints and Joint Replacements," Edited by D. Dowson and V. Wright, Mechanical Engineering Publications, Bury St. Edmunds, Suffolk. (To be published.)

Dowson, D. and Hamrock, B. J. (1976) "Numerical Evaluation of the Surface Deformation of Elastic Solids Subjected to a Hertzian Contact Stress," ASLE Trans., 19(4), 279-286.

Dowson, D. and Higginson, G. R. (1959) "A Numerical Solution to the Elastohydrodynamic Problem," J. Mech. Eng. Sci., 1(1), 7-15.

Dowson, D. and Higginson, G. R. (1961) "New Roller-Bearing Lubrication Formula," Engineering London, vol. 192, 158.

Dowson, D. and Higginson, G. R. (1964), "A Theory of Involute Gear Lubrication," Institute of Petroleum Gear Lubrication; Proceedings of a Symposium organized by the Mechanical Tests of Lubricants Panel of the Institute, (1964), Elsevier, 8-15.

Dowson, D. and Higginson, G. R. (1966) Elastohydrodynamic Lubrication, The Fundamentals of Roller and Gear Lubrication. Pergamon, Oxford.

Dowson, D., Saman, W. Y., and Toyoda, S. (1979) "A Study of Starved Elastohydrodynamic Line Contacts," Proceedings of Fifth Leeds-Lyon Symposium on Tribology on 'Elastohydrodynamics and Related Topics,' D. Dowson, C. M. Taylor, M. Godet, and D. Berthe, eds., Mechanical Engineering Publications, Ltd., 92-103.

Dowson, D. and Swales, P. D. (1969) "The Development of Elastohydrodynamic Conditions in a Reciprocating Seal," Proceedings of Fourth International Conference on Fluid Sealing, Vol. 2, Paper 1, British Hydromechanics Research Association, 1-9.

Dowson, D. and Toyoda, S. (1979) "A Central Film Thickness Formula for Elastodydrodynamic Line Contacts." Proceedings of Fifth Leeds-Lyon Symposium on Tribology on 'Elastohydrodynamics and Related Topics,' D. Dowson, C. M. Taylor, M. Godet, and D. Berthe, eds., Mechanical Engineering Publications, Ltd., 104-115.

Dowson, D. and Whitaker, A. V. (1965-66) "A Numerical Procedure for the Solution of the Elastohydrodynamic Problems of Rolling and Sliding Contacts Lubricated by a Newtonian Fluid," Proc. Inst. Mech. Eng., London, 180(3B), 57.

Dyson, A. (1970) "Flow Properties of Mineral Oils in Elastohydrodynamic Lubrication," Phil. Trans. R. Soc. London, Ser. A, 258(1093), 529-564.

Dyson, A., Naylor, H., and Wilson, A. R. (1965-66) "The Measurement of Oil-Film Thickness in Elastohydrodynamic Contacts," Proceedings of Symposium on Elastohydrodynamic Lubrication, Leeds, England, Institution of Mechanical Engineers, London, 76-91.

Dupuit, A. J. E. J. (1839), "Résumé de Mémoire sur le tirage des voitures et sur le frottement de seconde espece," Competes rendus de l'Académie des Sciences, Paris, IX, 689-700, 775.

Eaton, J. T. H., ed. (1969) "A Trip Down Memory Lane," The Dragon, XLIV (5), 5-7.

ESDU (1965) "General Guide to the Choice of Journal Bearing Type," Engineering Sciences Data Unit, Item 65007, Institute of Mechanical Engineers, London.

ESDU (1967) "General Guide to the Choice of Thrust Bearing Type," Engineering Sciences Data Unit, Item 67033, Institution of Mechanical Engineers, London.

ESDU (1978) "Grease Life Estimation in Rolling Bearings," Engineering Sciences Data Unit, Item 78032, Institution of Mechanical Engineers, London.

ESDU (1978) "Contact Phenomena. I: Stresses, Deflections and Contact Dimensions for Normally-Loaded Unlubricated Elastic Components," Engineering Sciences Data Unit, Item 78035, Institution of Mechanical Engineers, London.

Evans, H. P., Biswas, S., and Snidle, R. W. (1978) "Numerical Solution of Isothermal Point Contact Elastohydrodynamic Lubrication Problems," Proceeding of First International Conference on Numerical Methods in Laminar and Turbulent Flow, Pentech Press, London, 639-656.

Evans, H. P. and Snidle, R. W. (1978) "Toward a Refined Solution of the Isothermal Point Contact EHD Problem." International Conference Fundmentals of Tribology, Massachusetts Institute of Technology, Cambridge, Mass., June 19-22, 1978.

Fein, R. S. (1968) Discussion on the Papers of J. K. Appeldorn and A. B. Metzner, J. Lubr. Technol., 90, 540-542.

Fellows, T. G., Dowson, D., Perry, F. G., and Plint, M. A. (1963) "Perbury Continuously Variable Ratio Transmission," in N. A. Carter, Ed. Advances in Automobile Engineering, Part 2; Pergamon Press, 123-139.

Foord, C. A., Hammann, W. C., and Cameron, A. (1968) "Evaluation of Lubricants Using Optical Elastohydrodynamics," ASLE Trans., 11, 31-43.

Foord, C. A., Wedeven, L. D., Westlake, F. J. and Cameron, A. (1969-70) "Optical Elastohydrodynamics," Proc. Inst. Mech. Eng., London, Part I, 184, 487-503.

Fromm, H. (1948), "Laminre Strömung Newtonscher und Maxwellscher Slüssigkeiten," Angew Math. Mech., 28(2), 43-54.

Furey, M. J. (1961) "Metallic Contact and Friction Between Sliding Surfaces," ASLE Trans., vol. 4, 1-11.

Gentle, C. R. and Cameron, A. (1973) "Optical Elastohydrodynamics at Extreme Pressure," Nature, 246(5434), 478-479.

Gohar, R. and Cameron A. (1966) "The Mapping of Elastohydrodynamic Contacts," ASLE Trans., 10, 215-225.

Goodman, J. (1912) "(1) Roller and Ball Bearings;" "(2) The Testing of Antifriction Bearing Materials," Proceedings of the Institute of Civil Engineers, CLXXXIX, Session 1911-12, Pt. III, pp. 4-88.

Greenwood, J. A. (1969) "Presentation of Elastohydrodynamic Film-Thickness Results." J. Mech. Eng. Sci., 11(2), 128-132.

Greenwood, J. A. and Kauzlarich, J. J. (1973) "Inlet Shear Heating in Elastohydrodynamic Lubrication," J. Lubr. Technol., 95(4), 401-416.

Grubin, A. N. (1949) "Fundamentals of the Hydrodynamic Theory of Lubrication of Heavily Loaded Cylindrical Surfaces," Investigation of the Contact Machine Components. Kh. F. Ketova, ed., Translation of Russian Book No. 30, Central Scientific Institute for Technology and Mechanical Engineering, Moscow, Chapter 2. (Available from Dept. of Scientific and Industrial Research, Great Britain, Transl. CTS-235, and from Special Libraries Association, Chicago, Trans. R-3554.)

Gunther, R. T. (1930), Early Science in Oxford, Volumes VI and VII, "The Life and Work of Robert Hooke," Vol. VII, Pt. II, 666-679, printed for the author at the Oxford University Press by John Johnson (Oxford).

Hall, L. F. (1957) "A Review of the Papers on the Lubrication of Rotating Bearings and Gears," Proceedings of Conference on Lubrication and Wear, Institution of Mechanical Engineers, pp. 425-429.

Hamilton, G. M. and Moore, S. L. (1971) "Deformation and Pressure in an Elastohydrodynamic Contact," Proc. R. Soc., London, Ser. A, 322, 313-330.

Halling, J. (1976) Introduction of Tribology, Wykeham Publ., London.

Hamrock, B. J. (1976) Elastohydrodynamic Lubrication of Point Contacts, Ph.D. Dissertation, University of Leeds, Leeds, England.

Hamrock, B. J. and Anderson, W. J. (1973) "Analysis of an Arched Outer-Race Ball Bearing Considering Centrifugal Forces," J. Lubr. Technol., 95(3), 265-276.

Hamrock, B. J. and Dowson, D. (1974) "Numerical Evaluation of Surface Deformation of Elastic Solids Subjected to Hertzian Contact Stress," NASA TN D-7774.

Hamrock, B. J. and Dowson, D. (1976a) "Isothermal Elastohydrodynamic Lubrication of Point Contacts, Part I - Theoretical Formulation," J. Lubr. Technol., 98(2), 223-229.

Hamrock, B. J. and Dowson, D. (1976b) "Isothermal Elastohydrodynamic Lubrication of Point Contacts, Part II - Ellipticity Parameter Results," J. Lubr. Technol., 98(3), 375-378.

Hamrock, B. J. and Dowson, D. (1977a) "Isothermal Elastohydrodynamic Lubrication of Point Contacts, Part III - Fully Flooded Results," J. Lubr. Technol., 99(2), 264-276.

Hamrock, B. J. and Dowson, D. (1977b) "Isothermal Elastohydrodynamic Lubrication of Point Contacts, Part IV - Starvation Results," J. Lubr. Technol., 99(1), 15-23.

Hamrock, B. J. and Dowson, D. (1978) "Elastohydrodynamic Lubrication of Elliptical Contacts for Materials of Low Elastic Modulus, Part I - Fully Flooded Conjunction," J. Lubr. Technol., 100(2), 236-245.

Hamrock, B. J. and Dowson, D. (1979a) "Elastohydrodynamic Lubrication of Elliptical Contacts for Materials of Low Elastic Modulus, Part II - Starved Conjunction," J. Lubr. Technol., 101(1), 92-98.

Hamrock, B. J. and Dowson, D. (1979b) "Minimum Film Thickness in Elliptical Contacts for Different Regimes of Fluid-Film Lubrication," Proceedings of Fifth Leeds-Lyon Symposium on Tribology on 'Elastohydrodynamics and Related Topics,' D. Dowson, C. M. Taylor, M. Godet, and D. Berthe, eds., Mechnical Engineering Publications, Ltd., 22-27.

Hardy, W. B. and Doubleday, I. (1922a) "Boundary Lubrication - the Temperature Coefficient," Proc. R. Soc. London, Ser. A, 101, 487-492.

Hardy, W. B. and Doubleday, I. (1922b) "Boundary Lubrication - the Paraffin Series," Proc. R. Soc. London, Ser. A., 100, 550-574.

Harris, T. A. (1966) Rolling Bearing Analysis. Wiley, New York.

Harris, T. A. (1971) "An Analytical Method to Predict Skidding in Thrust-Loaded, Angular-Contact Ball Bearings," J. Lubr. Technol., vol. 93, 17-24.

Harrison, H. C. (1949) The Story of Sprowston Mill, Phoenix House, London.

Harrison, W. J. (1913) "The Hydrodynamical Theory of Lubrication with Special Reference to Air as a Lubricant," Trans. Cambridge Philos. Soc., xxii (1912-25), 6-54.

Harrison, G. and Trachman, E. G. (1972) "The Role of Compressional Viscoelasticity in the Lubrication of Rolling Contacts," J. Lubr. Technol., 94, 306-312.

Heathcote, H. L. (1921) "The Ball Bearing: In the Making, Under Test, and on Service," Proc. Instn. Automotive Engrs., London, 15, pp. 569-702.

Herrebrugh, K. (1968) "Solving the Incompressible and Isothermal Problem in Elastohydrodynamic Lubrication Through an Integral Equation," J. Lubr. Technol., 90(1), 262-270.

Hersey, M. D. (1966) Theory and Research in Lubrication - Foundations for Future Developments, Wiley, New York.

Hersey, M. S. and Hopkins, R. F. (1954) "Viscosity of Lubricants Under Pressure. Coordinated Data from Twelve Investigations." ASME, New York.

Hertz, H. (1881) "The Contact of Elastic Solids," J. Reine Angew. Math., 92, 156-171.

Hooke, C. J. (1977) "The Elastohydrodynamic Lubrication of Heavily Loaded Contacts," J. Mech. Eng. Sci., 19(4), 149-156.

Hirst, W. and Moore, A. J. (1974) "Non-Newtonian Behavior in Elastohydrodynamic Lubrication," Proc. R. Soc. London, Ser. A, 337, 101-121.

Houghton, P. S. (1976) Ball and Roller Bearings, Applied Science Publishers, Ltd., London.

Jacobson, B. (1970) "On the Lubrication of Heavily Loaded Spherical Surfaces Considering Surface Deformations and Solidification of the Lubricant." Acta Polytech. Scand., Mech. Eng. Ser. No. 54.

Jacobson, B. (1972) "Elasto-Solidifying Lubrication of Spherical Surfaces." American Society of Mechanical Engineers Paper No. 72-LUB-7.

Jacobson, B. (1973) "On the Lubrication of Heavily Loaded Cylindrical Surfaces Considering Surface Deformations and Solidification of the Lubricant," J. Lubr. Technol., 95(3), 321-27.

Jamison, W. E., Lee, C. C., and Kauzlarich, J. J. (1978) "Elasticity Effects on the Lubrication of Point Contacts," ASLE Trans., 21(4), 299-306.

Johnson, B. L. (1964) "A 'Stainless High Speed' Steel for Aerospace Applications," Metal Prog., 86(3), 116-118.

Johnson, B. L. (1965) "High Temperature Wear Resisting Steel," U.S. Patent No. 3,167,423, Jan. 1965.

Johnson, K. L. (1970) "Regimes of Elastohydrodynamic Lubrication." J. Mech. Eng. Sci., 12(1), 9-16.

Johnson, K. L. and Cameron, R. (1967) "Shear Behavior of Elastohydrodynamic Oil Films at High Rolling Contact Pressures," Proc. Ins. Mech. Eng., Part 1, 182, 307-319.

Johnson, K. L. and Roberts, A. D. (1974) "Observation of Viscoelastic Behaviour of an Elastohydrodynamic Lubricant Film," Proc. R. Soc. London, Ser. A, 337, 217-242.

Johnson, K. L. and Tevaarwerk, J. L. (1977) "Shear Behaviour of Elastohydrodynamic Oil Films," Proc. R. Soc. London, Ser. A, 356, 215-236.

Jones, A. B. (1946) "Analysis of Stresses and Deflections," New Departure Engineering Data, General Motors Corp., Bristol, Conn.

Jones, A. B. (1956) "The Mathematical Theory of Rolling-Element Bearings," Mechanical Design and Systems Handbook.

Kannel, J. W., Bell, J. C., and Allen, C. M. (1964) "Methods for Determining Pressure Distribution in Lubricated Rolling Contact," ASLE Paper 64-LC-23, Presented at ASME-ASLE Lubrication Conference, Washington, D.C., Oct. 13-16, 1964.

Kakuta, K. (1979) "The State of the Art of Rolling Bearings in Japan," Bull. Japan Soc. Prec. Eng., 13(4), 169-176.

Kapitza, P. L. (1955) "Hydrodynamic Theory of Lubrication During Rolling," Zh. Tekh. Fiz., 25(4), 747-762.

Koye, K. A. and Winer, W. O. (1980) " An Experimental Evaluation of the Hamrock and Dowson Minimum Film Thickness Equation for Fully Flooded EHD Point Contacts," International ASME/ASLE Lubrication Conference, San Francisco, August 1980.

Kunz, R. K. and Winer, W. O. (1977) Discussion 275-276, to Hamrock, B. J. and Dowson, D. "Isothermal Elastohydrodynamic Lubrication of Point Contacts, Part III - Fully Flooded Results," J. Lubr. Technol., 99(2), 264-275.

Lane, T. B. (1951) "Scuffing Temperatures of Boundary Lubricant Films," Br. J. Appl. Phys., 2, (Suppl. 1), 35-38.

Lane, T. B. and Hughes, J. R. (1952) "A Study of the Oil Film Formation in Gears by Electrical Resistance Measurements," Br. J. Appl. Phys., 3(10), 315-318.

Lamb, H. (1932) Hydrodynamics. Cambridge University Press.

Layard, A. H. (1849) Nineveh and Its Remains, Vols. I and II, John Murray, London.

Layard, A. H. (1853) Discoveries in the Ruins of Nineveh and Babylon, Vols. I and II, John Murray, London.

Lee, D., Sanborn, D. M., and Winer, W. O. (1973) "Some Observations of the Relationship Between Film Thickness and Load in High Hertz Pressure Sliding Elastohydrodynamic Contacts," J. Lubr. Technol., 95(3), 386.

Leibnitz, G. W. (1706) "Tentamen de natura et remedlie resistenziarum in machines," Miscellanea Berolinensia. Class. mathem, 1710, (Jean Boudot, Paris), 1, 307.

Lewicki, W. (1955) "Some Physical Aspects of Lubrication in Rolling Bearings and Gears," Engineer, 200 (5193), 176-178, and (5194), 212-215.

Lundberg, G. and Palmgren, A. (1947) "Dynamic Capacity of Rolling Bearings," Acta Polytech., Mech. Eng. Sci., 1(3).

Martin, H. M. (1916) "Lubrication of Gear Teeth," Engineering, London, 102, 199.

McEwen, E. (1952) "The Effect of Variation of Viscosity with Pressure on the Load Carrying Capacity of Oil Films Between Gear Teeth," J. Inst. Petrol., 38, 646.

Meldahl, A. (1941) "Contribution to the Theory of the Lubrication of Gears and of the Stressing of the Lubricated Flanks of Gear Teeth," Brown Boveri Review, 28(11), 374.

Merritt, H. E. (1935) "Worm-Gear Performance," Proc. Inst. Mech. Eng., London, 129, 127-158.

Meyer, D. R. and Wilson, C. C. (1971) "Measurement of Elastohydrodynamic Oil Film Thickness and Wear in Ball Bearings by the Strain Gage Method," J. Lubr. Technol., 93(2), 224-230.

Moes, H. (1965-66) "Communication, Elastohydrodynamic Lubrication," Proc. Inst. Mech. Eng., London, 180(3B), 244-245.

Moes, H. and Bosma, R. (1972) "Film Thickness and Traction in EHL at Point Contact," Proceedings of Second Symposium on Elastohydrodymamic Lubrication, Leeds, England, Institution of Mechanical Engineers, London, 149.

Moore, A. J. (1973) "Non-Newtonian Behaviour in Elastohydrodynamic Lubrication," Ph.D. Thesis, University of Reading.

Morgan, M. H. and Warren, H. L. (1960) Translation of Vitruvius: The Ten Books of Architecture, Dover, New York.

Morin, A. J. (1835) "Nouvelles expériences faites à Metz en 1833 sur le frottement, sur la transmission due movement par le choc, sur le résistance des milieun imparfaits a le pénétration des projectiles, et sur le frottement pendant le choc," Mem. Savans Etrang. (Paris), VI, 641-785; Ann. Min. X, (1836), 27-56.

Nagaraj, H. S., Sanborn, D. M., and Winer, W. O. (1977) "Effects of Load, Speed, and Surface Roughness on Sliding EHD Contact Temperature," J. Lubr. Technol., 99(4), 254-263.

Navier, C. L. M. H. (1823) "Memoire sur les lois du mouvement des fluides," Mem. Acad. R. Sci., 6(2), 389-440.

Needham, J. (1965) Science and Civilization in China, Vol. 4, Physics and Physical Technology, Part II, Mechanical Engieering, Cambridge University Press.

Newton, I. (1687) Philosophiae Naturales Principia Mathematica, Imprimature S. Pepys, Reg. Soc. Praeses, 5 Julii 1686. Revised and supplied with a historical and explanatory appendix by F. Cajori, edited by R. T. Crawford (1934), and published by the University of California Press, Berkeley and Los Angeles (1966).

Orcutt, F. K. and Cheng, H. S. (1966) "Lubrication of Rolling-Contact Instrument Bearings," Gyro-Spin Axis Hydrodynamic Bearing Symposium, Vol. 2, Ball Bearings, Massachusetts Institute of Technology, Cambridge, Mass., Tab. 5.

Pai, S. I (1956) Viscous Flow Theory, Vol. I - Laminar Flow. Van Nostrand Reinhold, New Jersey.

Palmgren, A. (1945) "Ball and Roiller Bearing Engineering," S. K. F. Industries, Philadelphia.

Parker, R. J. and Hodder, R. S. (1978) "Roller-Element Fatigue Life of AMS 5749 Corrosion Resistant, High Temperature Bearing Steel," J. Lubr. Technol., 100(2), 226-235.

Parker, R. J. and Kannel, J. W. (1971) "Elastohydrodynamic Film Thickness Between Rolling Disks with a Synthetic Paraffinic Oil to 589 K (600° F); NASA TN D-6411.

Parker, R. J. and Zaretsky, E. V. (1978) "Rolling-Element Fatigue Life of AISI M-50 and 18-4-1 Balls." NASA TP-1202.

Peppler, W. (1936) "Untersuchunge uber die Drukubertragung bei Balasteten und Geschmierten um Laufenden Achsparallelen Zylinder," Maschinenelemente-Tagung Archen 1935, 42; V. D. I. Verlag, Berlin, 1936.

Peppler, W. (1938) "Druchubertragung an Geschmeirten Zylindriachen Gleit und Wälzflächen," V. D. I. Forschungshaft, 391.

Petrov, N. P. (1883) "Friction in Machines and the Effect of the Lubricant," Inzh. Zh., St. Peterb., 1, 71-140; 2, 227-279; 3, 377-436; 4, 535-564.

Petrusevich, A. S. (1951) "Fundamental Conclusion from the Contact-Hydrodynamic Theory of Lubrication," dzo. Akad. Nauk. SSSR (OTN), 2, 209.

Piggott, S. (1968) "The Earliest Wheeled Vehicles and the Caucasian Evidence," Proc. Prehist. Soc., XXXIV, (8), 266-318.

Pirvics, J. (1980) "Numerical Analysis Techniques and Design Methology for Rolling Element Bearing Load Support Systems," in International Conference on Bearing Design: Historical Aspects, Present Technology and Future Problems; Century 2 - Emerging Technology, W. J. Anderson, ed., American Society of Mechanical Engineers, New York, 1980, 47-85.

Plint, M. A. (1967) "Traction in Elastohydrodynamic Contact," Proc. Inst. Mech. Eng., London, Part 1, 182(14), 300-306.

Poritsky, H., Hewlett, C. W., Jr., and Coleman, R. E., Jr. (1947) "Sliding Friction of Ball Bearings of the Pivot Type," J. Appl. Mech., 14(4), 261-268.

Pritchard, C. (1981) "Traction Between Rolling Steel Surfaces - A Survey of Railway and Laboratory Services," Proceedings of the 7th Leeds-Lyon Symposium on 'Friction and Traction, Leeds, September 1980, Mechanical Engineering Publications. (To be published.)

Ramelli, A. (1588) "Le Diverse et Artificiose Machine," Paris, France.

Ranger, A. P., Ettles, C. M. M., and Cameron, A. (1975) "The Solution of Point Contact Elastohydrodynamic Problem," Proc. R. Soc. London, Ser. A, 346, 277-244.

Reti, L. (1971) "Leonardo on Bearings and Gears," Scientific American, 224, (2), 101-110.

Reynolds, O. (1875) "On Rolling Friction," Phil. Trans. R. Soc., 166, Pt. 1, 155.

Reynolds, O. (1886) "On the Theory of Lubrication and Its Application to Mr. Beauchamp Tower's Experiments, Including an Experimental Determination of the Viscosity of Olive Oil," Philos. Trans. R. Soc. London, 177, 157-234.

Roelands, C. J. A. (1966) Correlational Aspects of the Viscosity-Temperature-Pressure Relationship of Lubricating Oils. Druk. V. R. B., Groningen, Netherlands.

Rowe, J. (1734) "All Sorts of Wheel-Carriage Improved," printed for Alexander Lyon under Tom's Coffee House in Russell Street, Covent Garden, London.

Sanborn, D. M. (1969) "An Experimental Investigation of the Elastohydrodynamic Lubrication of Point Contacts in Pure Sliding," Ph.D. Thesis, University of Michigan.

Schlatter, R. (1974) "Double Vacuum Melting of High Performance Bearing Steels," Ind. Heat. 41(9), 40-55.

Shaw, M. C. and Macks, E. F. (1949) Analysis and Lubrication of Bearings, McGraw-Hill, New York.

Sibley, L. B., Bell, J. C., Orcutt, F. K., and Allen, C. M. (1960) "A Study of the Influence of Lubricant Properties on the Performance of Aircraft Gas Turbine Engine Rolling Contact Bearings," WADD Technical Report, 60-189.

Sibley, L. B. and Orcutt, F. K. (1961) "Elasto-Hydrodynamic Lubrication of Rolling Contact Surfaces," Trans. Amer. Soc. Lub. Engrs., 4(2), 234.

Smith, F. W. (1959) "Lubricant Behavior in Concentrated Contact Systems - The Caster Oil - Steel System," Wear, 2(4), 250-264.

Smith, F. W. (1962) The Effect of Temperature in Concentrated Contact Lubrication. ASLE Trans. 5(1), 142-148.

Stokes, G. G. (1845) "On the Theory of Internal Friction of Fluids in Motion," Trans. Cambridge Philos. Soc. 8, 287-319.

Stribeck, R. (1901) " Kugellager fur beliebige Belastungen," Z. Ver. dt. Ing., 45(3), 73-125.

Stribeck, R (1907) "Ball Bearings for Various Loads" - translation by H. Hess, Trans. Am. Soc. Mech. Engrs., 29, 420.

Swingler, C. L. (1980) "Surface Roughness in Elastohydrodynamic Line Contacts," Ph.D. Thesis, University of London (Imperial College).

Tabor, D. (1962) "Introductory Remarks," in Rolling Contact Phenomena, J. B. Bidwell, ed., Elsevier, Amsterdam, 1-5.

Tallian, T. E. (1969) "Progress in Rolling Contact Technology," Report AL 690007, SKF Industries, King of Prussia, Pa.

Tallian, T., Sibley, L., and Valori, R. (1965) "Elastohydrodynamic Film Effects on the Load-Life Behavior of Rolling Contacts," ASMS Paper 65-LubS-11.

Theyse, F. H. (1966) "Some Aspects of the Influence of Hydrodynamic Film Formation on the Contact Between Rolling/Sliding Surfaces," Wear, 9, 41-59.

Thorp, N. and Gohar, R. (1972) "Oil Film Thickness and Shape for a Ball Sliding in a Grooved Raceway," J. Lubr. Technol., 94(3), 199-210.

Timoshenko, S. and Goodier, J. N. (1951) Theory of Elasticity, 2nd ed., McGraw-Hill, New York.

Trachman, E. G. and Cheng, H. S. (1972) "Thermal and Non-Newtonian Effects on Traction in Elastohydrodynamic Contacts," Proceedings of Second Symposium on Elastohydrodynamic Lubrication, Institution of Mechanical Engineers, London, 142-148.

Tower, B. (1883) "First Report on Friction Experiments (Friction of Lubricated Bearings)," Proc. Inst. Mech. Eng., London, 632-659.

Turchina, V., Sanborn, D. M., and Winer, W. O. (1974) "Temperature Measurements in Sliding Elastohydrodynamic Point Contacts," J. Lubr. Technol., 96(3), 464-471.

Ucelli, G. (1940) "Le Navi Di Nemi," La Liberia Dello Stato, Roma.

Valori, R. (1978) Discussion to Parker, R. J. and Hodder, R. S. (1978) Rolling-Element Fatigue Life of AMS 5749 Corrosion Resistant, High Temperature Bearing Steel," J. Lubr. Technol., 100(2), 226-235.

Van Natrus, L., Polly, J., and Van Vuuren, C. (1734 and 1736), Groot Volkomen Moolenbock, 2 Volumes, Amsterdam.

Varlo, C. (1772) "Reflections Upon Friction with a Plan of the New Machine for Taking It Off in Wheel-Carriages, Windlasses of Ships, etc., Together with Metal Proper for the Machine, the Full Directions for Making It."

Vaughan, P. (1794) "Axle Trees, Arms, and Boxes," British Patent No. 2006 of A.D. 1794, 1-2, accompanied by 11 diagrams on one sheet.

Wailes, R. (1954) The English Windmill, Routledge & Kegan Paul, London.

Wailes, R. (1957) "Windmills" in History of Technology, C. Singer, E. J. Holmyard, A. R. Hall, and T. I. Williams, eds., Volume III, Oxford University Press, pp. 89-109.

Weber, C. and Saalfeld, K. (1954) Schmierfilm bei Walzen mit Verformung, Zeits ang. Math. Mech. 34 (Nos. 1-2).

Wedeven, L. E., Evans, D., and Cameron, A. (1971) "Optical Analysis of Ball Bearing Starvation," J. Lubr. Technol., 93(3), 349-363.

Weibull, W. (1949) "A Statistical Representation of Fatigue Failures in Solids," Trans. Roy. Inst. Technol., (27), Stockholm.

Whomes, T. L. (1966) The Effect of Surface Quality of Lubricating Film Performance, Ph.D. Dissertation, University of Leeds, Leeds, England.

Wilcock, D. F. and Booser, E. R. (1957) Bearing Design and Application. McGraw-Hill, New York.

Willis, T., Seth, B., and Dave, M. (1975) "Evaluation of a Diffraction Method for Thickness Measurement of Oil-Filled Gaps," J. Lubr. Technol. 97(4), 649-650.

Wilson, A. R. (1979) "The Relative Thickness of Grease and Oil Films in Rolling Bearings," Proc. Inst. Mech. Eng., London, 193(17), 185-192.

Winn, L. W., Eusepi, M. W., and Smalley, A. J. (1974) "Small, High-Speed Bearing Technology for Cryogenic Turbo-Pumps," MTI-74TR29, Mechanical Technology, Inc., Latham, N.Y. (NASA CR-134615.)

Wolveridge, P. E., Baglin, K. P., and Archard, J. G. (1971) "The Starved Lubrication of Cylinders in Line Contact," Proc. Inst. Mech. Eng., London, 185(1), 1159-1169.

Zaretsky, E. V., Anderson, W. J., and Bamberger, E. N. (1969) "Rolling Element Bearing Life for 400° to 600° F." NASA TN D-5002.

Zaretsky, E. V., Parker, R. J., and Anderson, W. J. (1967) "Component Hardness Differences and Their Effect on Bearing Fatigue," J. Lubr. Technol., 87(1), 47-62.

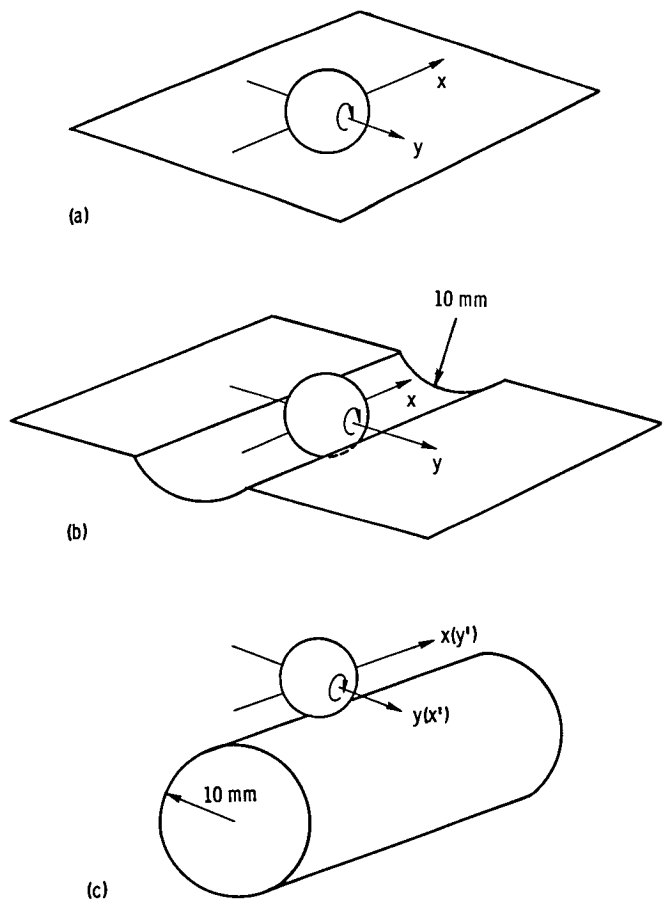

(a) Ball on plane.
(b) Ball in groove.
(c) Ball on cylinder.

Figure 13.1. - Contact between a 10-mm-diameter steel ball and plane, concave, and convex steel surfaces. Groove and cylinder radii, 10 mm.

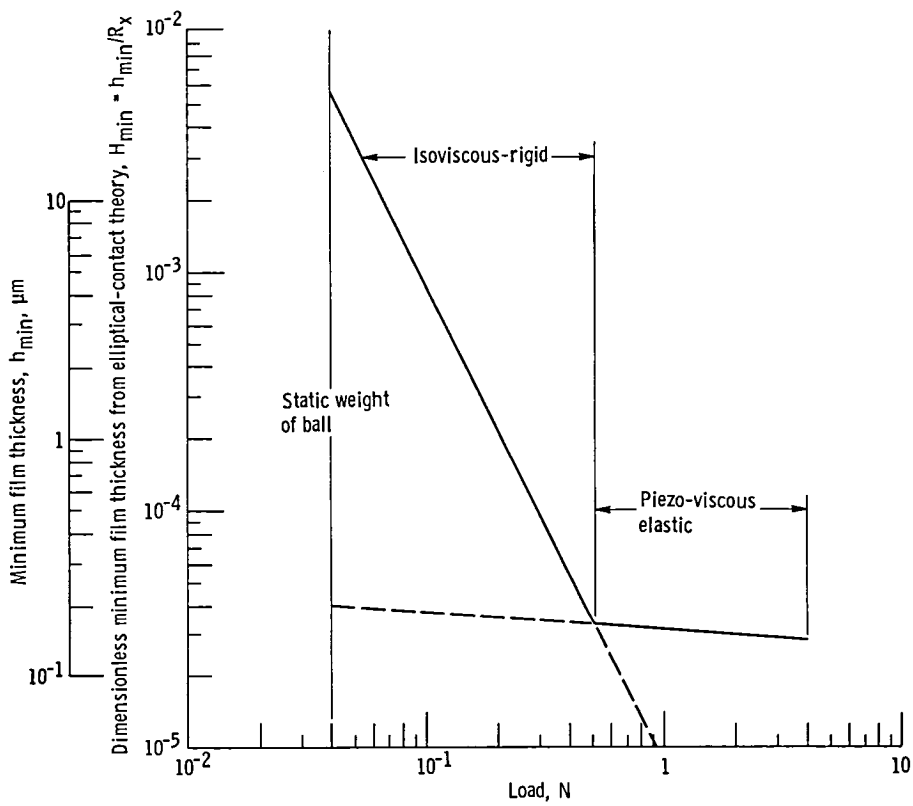

Figure 13.2. - Variation of minimum film thickness with load for 10-mm-diameter steel ball rolling on flat surface of semi-infinite steel body with rolling speed of 1 m/s. Ellipticity parameter, k, 1.

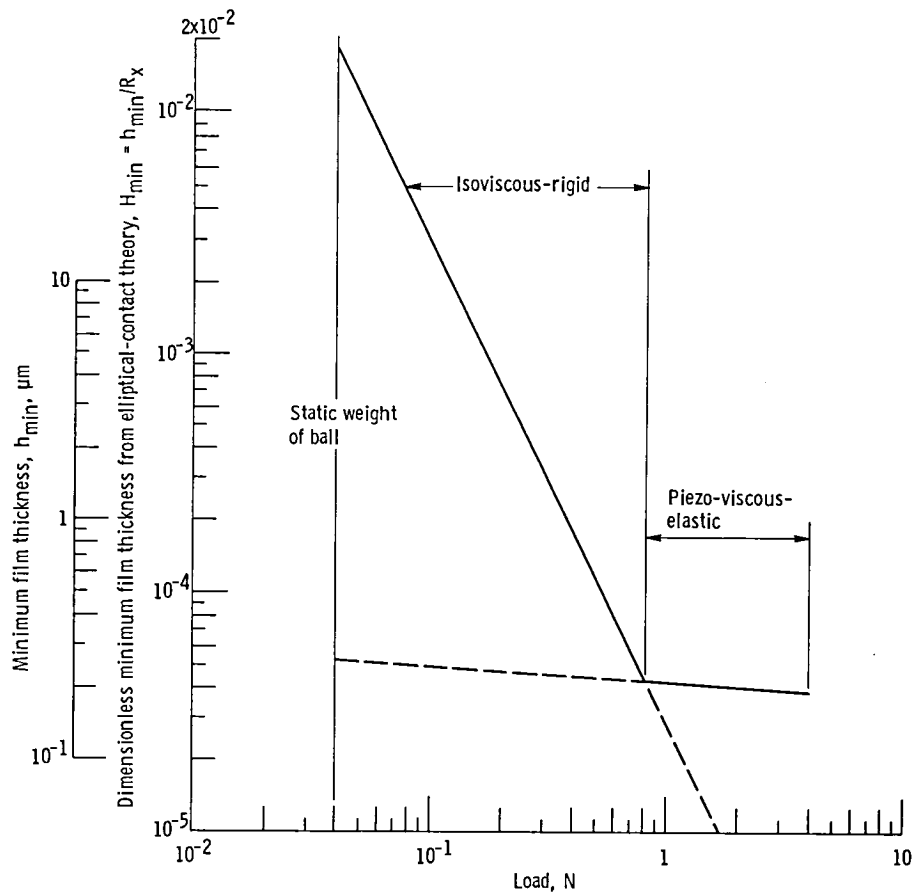

Figure 13.3. - Variation of minimum film thickness with load for 10-mm-diameter steel ball rolling in 10-mm-radius groove on semi-infinite steel body with rolling speed of 1 m/s. Ellipticity parameter, k, 1.61.

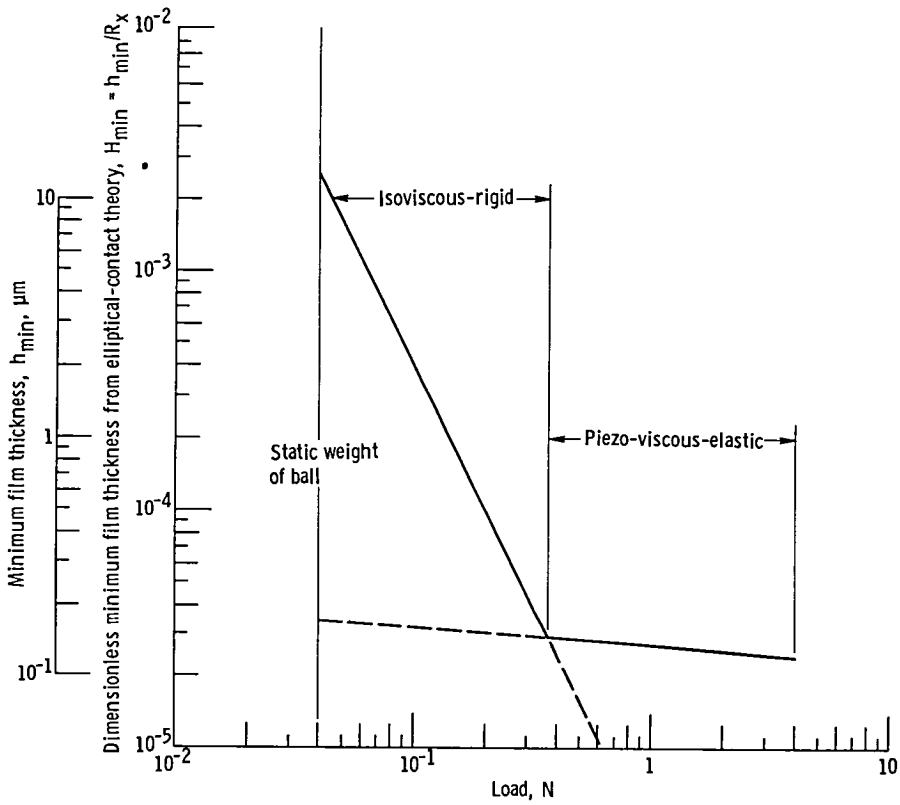

Figure 13.4. - Variation of minimum film thickness with load for 10-mm-diameter steel ball rolling on 10-mm-diameter steel cylinder with rolling speed of 1 m/s. Ellipticity parameter, k, 0.80.

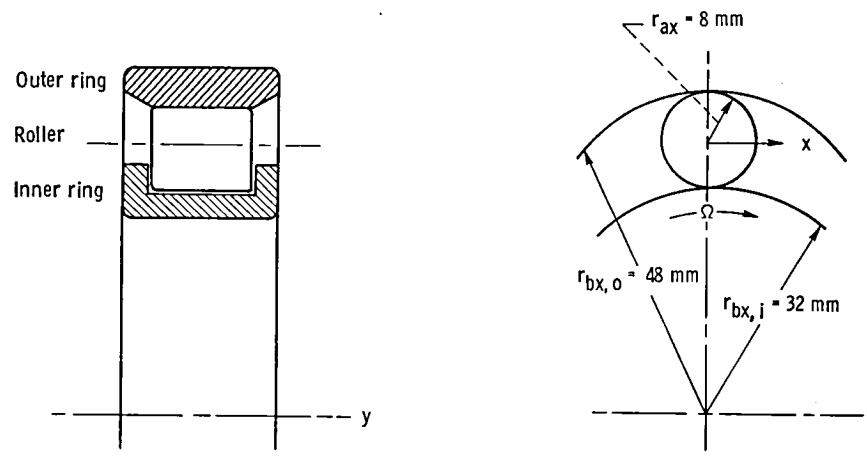

$r_{ay} = r_{by,i} = r_{by,o} = \infty$

Figure 13.5. - Roller bearing example.

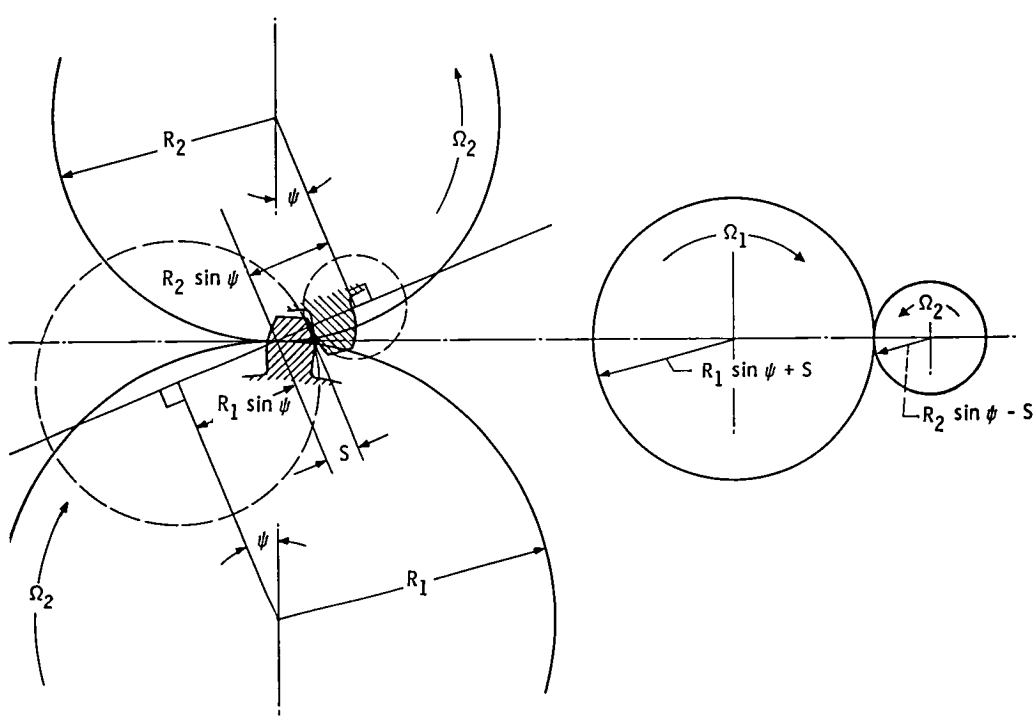

Figure 13.6. - Involute spur gears and representation by equivalent cylinders.

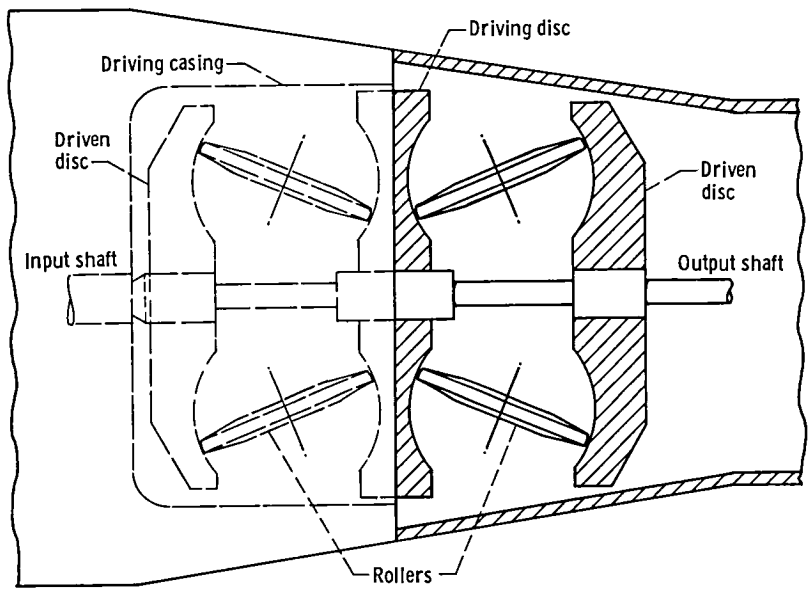

Figure 13.7. - Continuously variable-speed drive.

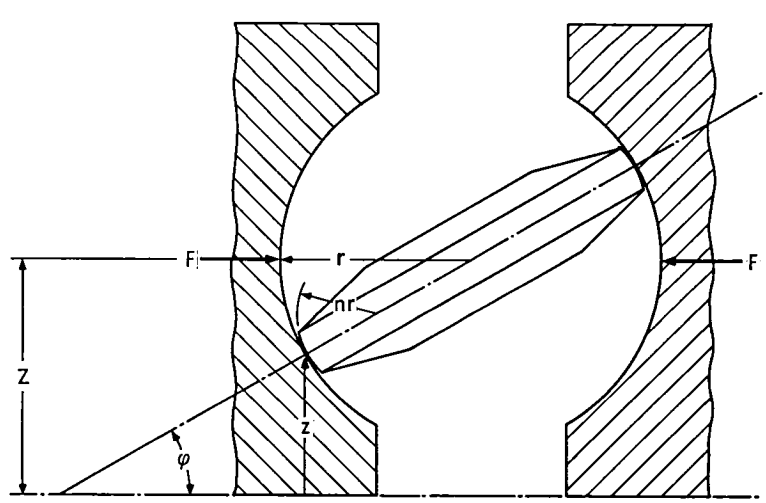

Figure 13.8. - Geometry of crowned roller and toroidal surfaces in a continuously variable-speed drive.

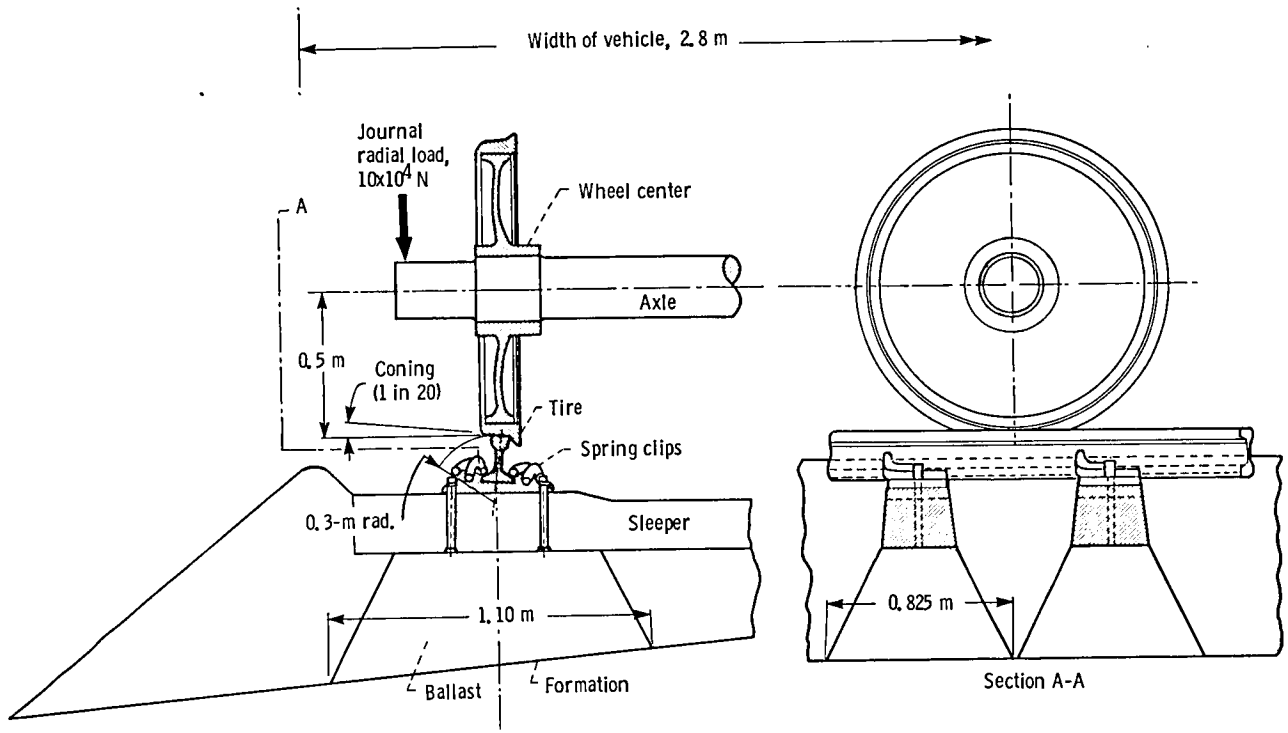

Figure 13.9. - Construction of modern track and locomotive driving wheel. (From Barwell, 1974.)

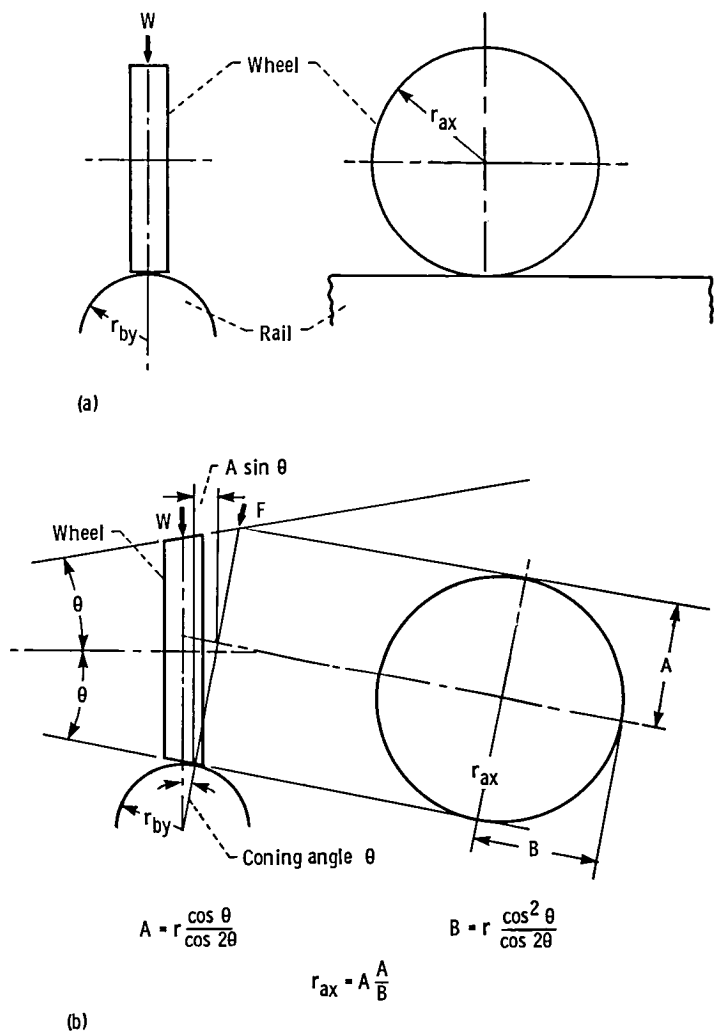

Figure 13.10. - Contact between wheel and rail.

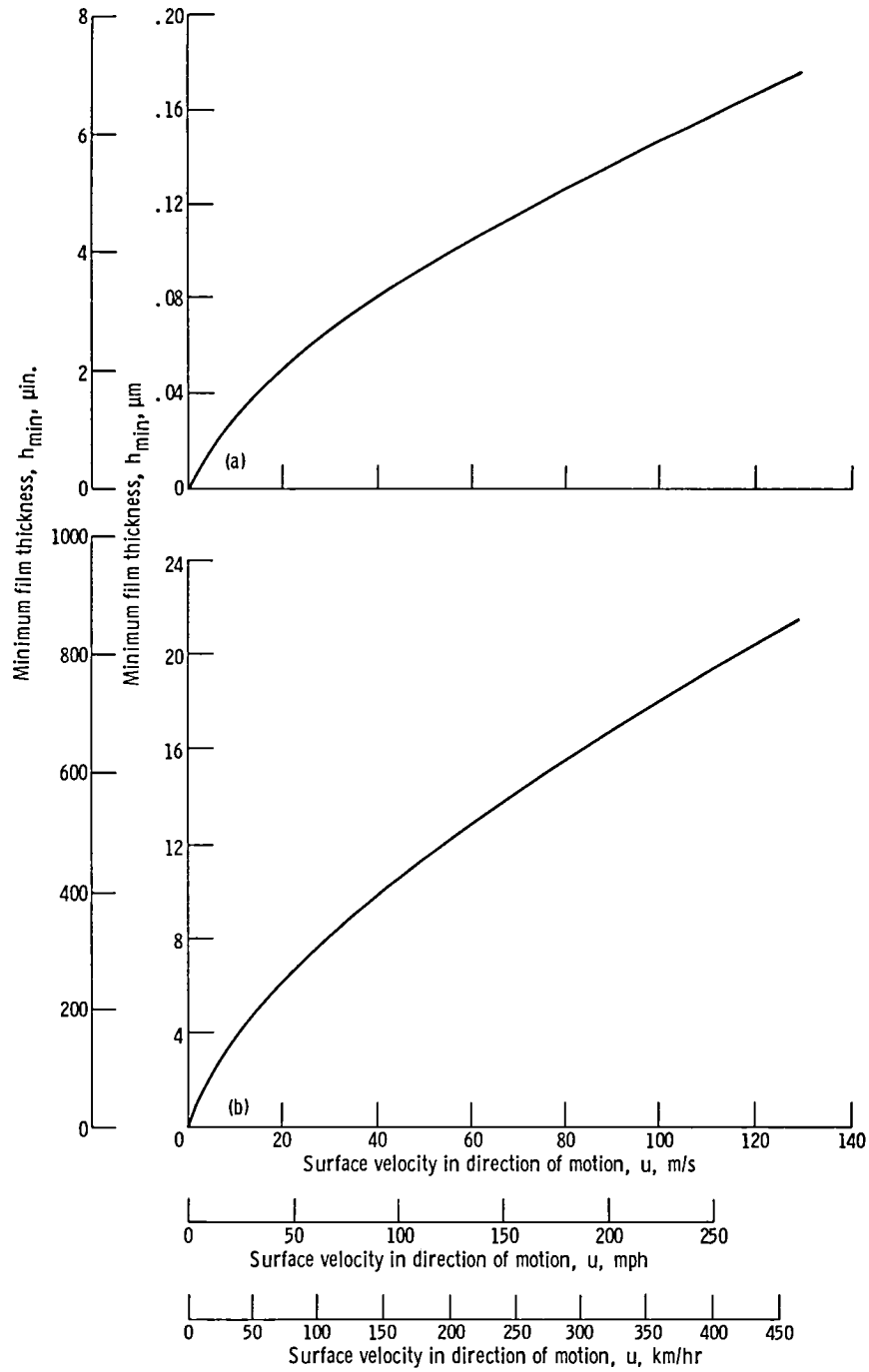

(a) Wet rail: viscosity of water at atmospheric pressure, η_0, 0.001 N s/m^2; viscosity-pressure coefficient, α, 6.68×10^{-10} m^2/N.
(b) Oily rail: viscosity of oil at atmospheric pressure, η_0, 0.1 N s/m^2; viscosity-pressure coefficient, α, 2.2×10^{-8} m^2/N.

Figure 13.11. - Variation of minimum thickness with speed for a wheel on a rail.

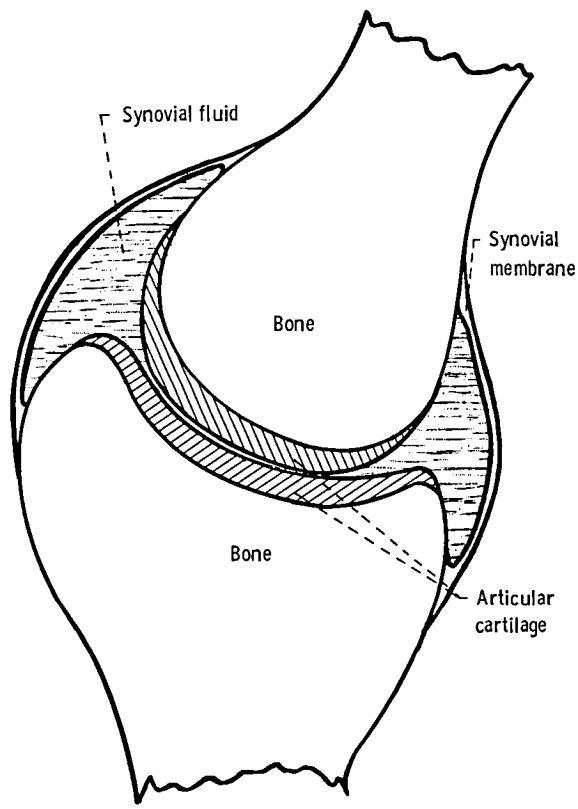

Figure 13.12 - Illustration of a synovial joint.

1. Report No.	2. Government Accession No.	3. Recipient's Catalog No.
NASA TM-81701		

4. Title and Subtitle	5. Report Date
Applications of Film Thickness Equations	May 1983
	6. Performing Organization Code: 505-32-42
7. Author(s): Bernard J. Hamrock and Duncan Dowson	8. Performing Organization Report No.: E-209
	10. Work Unit No.
9. Performing Organization Name and Address: National Aeronautics and Space Administration, Lewis Research Center, Cleveland, Ohio 44135	11. Contract or Grant No.
	13. Type of Report and Period Covered: Technical Memorandum
12. Sponsoring Agency Name and Address: National Aeronautics and Space Administration, Washington, D.C. 20546	14. Sponsoring Agency Code

15. Supplementary Notes

Bernard J. Hamrock, NASA Lewis Research Center, Cleveland, Ohio; Duncan Dowson, Institute of Tribology, Department of Mechanical Engineering, The University of Leeds, Leeds England. Published as Chapter 13 of Ball Bearing Lubrication by Bernard J. Hamrock and Duncan Dowson, John Wiley & Sons, Inc., Sept. 1981.

16. Abstract

A number of applications of elastohydrodynamic film thickness expressions have been considered. The motion of a steel ball over steel surfaces presenting varying degrees of conformity was examined. The equation for minimum film thickness in elliptical conjunctions under elastohydrodynamic conditions was applied to roller and ball bearings. An involute gear was also introduced, it was again found that the elliptical conjunction expression yielded a conservative estimate of the minimum film thickness. Continuously variable-speed drives like the Perbury gear, which present truly elliptical elastohydrodynamic conjunctions, are favored increasingly in mobile and static machinery. A representative elastohydrodynamic condition for this class of machinery is considered for power transmission equipment. The possibility of elastohydrodynamic films of water or oil forming between locomotive wheels and rails is examined. The important subject of traction on the railways is attracting considerable attention in various countries at the present time. The final example of a synovial joint introduced the equation developed for isoviscous-elastic regimes of lubrication.

17. Key Words (Suggested by Author(s))	18. Distribution Statement
Elastohydrodynamic lubrication; Roller and ball bearings; Involute and Perbury gears; Power transmission equipment; Locomotive wheels and rails; Synovial joints	Unclassified - unlimited STAR Category 37

19. Security Classif. (of this report)	20. Security Classif. (of this page)	21. No. of pages	22. Price*
Unclassified	Unclassified		

*For sale by the National Technical Information Service, Springfield, Virginia 22161

National Aeronautics and
Space Administration

Washington, D.C.
20546

Official Business
Penalty for Private Use, $300

SPECIAL FOURTH CLASS MAIL
BOOK

U.S. MAIL

Postage and Fees Paid
National Aeronautics and
Space Administration
NASA-451

NASA

POSTMASTER: If Undeliverable (Section 158 Postal Manual) Do Not Return