General Disclaimer

One or more of the Following Statements may affect this Document

- This document has been reproduced from the best copy furnished by the organizational source. It is being released in the interest of making available as much information as possible.

- This document may contain data, which exceeds the sheet parameters. It was furnished in this condition by the organizational source and is the best copy available.

- This document may contain tone-on-tone or color graphs, charts and/or pictures, which have been reproduced in black and white.

- This document is paginated as submitted by the original source.

- Portions of this document are not fully legible due to the historical nature of some of the material. However, it is the best reproduction available from the original submission.

Produced by the NASA Center for Aerospace Information (CASI)

9950-840

APPLIED CONCEPTS CORPORATION

(NASA-CR-172975) AIR FORCE LOGISTICS COMMAND (AFLC) SOLAR THERMAL PLANT Final Report (Applied Concepts Corp.) 65 p HC A04/MF A01 CSCL 10B

N83-33326

Unclas

G3/44 28570

AIR FORCE LOGISTICS COMMAND (AFLC)

Solar Thermal Plant

Final Report

Document No. K10-01-83FR

April 15, 1983

AUG 1983
RECEIVED
NASA STI FACILITY
ACCESS DEPT.

JPL Contract No. 956231

DRL Line No. 09, Reference No. TE06

This work was performed for the Jet Propulsion Laboratory, California Institute of Technology, sponsored by the National Aeronautical and Space Administration under Contract NAS7-100.

Prepared by:

APPLIED CONCEPTS CORPORATION
109K North Main Street
Woodstock, Virginia 22664
Telephone (703) 459-4404

APPLIED CONCEPTS CORPORATION

AIR FORCE LOGISTICS COMMAND (AFLC)

Solar Thermal Plant

Final Report

Document No. K10-01-83FR

April 15, 1983

JPL Contract No. 956231

DRL Line No. 09, Reference No. TE06

This work was performed for the Jet Propulsion Laboratory, California Institute of Technology, sponsored by the National Aeronautical and Space Administration under Contract NAS7-100.

Prepared by:

APPLIED CONCEPTS CORPORATION
109K North Main Street
Woodstock, Virginia 22664
Telephone (703) 459-4404

This document contains information prepared by Applied Concepts Corporation under JPL sub-contract. Its content is not necessarily endorsed by the Jet Propulsion Laboratory, California Institute of Technology, or its sponsors.

APPLIED CONCEPTS CORPORATION

FOREWORD

This final report presents the results of an effort entitled "Air Force Logistics Command (AFLC) Sclar Thermal Plant," performed for the Jet Propulsion Laboratory (JPL) on behalf of the U.S. Air Force, under JPL Contract Number 956231. The work was jointly sponsored by Headquarters Air Force Logistics Command as the using agency, and the Air Force Engineering and Services Laboratory, as the evaluative agency. The work was conducted between 1 April 1982, the date of contract award, and 7 February 1983, the final date of a three month test and evaluation period. Questions regarding this report or the research reported herein may be addressed to:

The project manager: Mr. J. Scott Hauger
Applied Concepts Corporation
109 K North Main Street
Woodstock, VA 22664
(703)-459-4404

or to the project engineer: Mr. Stanley L. Pond
Applied Concepts Engineering Center
2501 S. Cty Rd 21
Berthoud, CO 80513
(303)-444-5105.

APPLIED CONCEPTS CORPORATION

ABSTRACT AND SUMMARY

The Air Force Logistics Command (AFLC) Solar Thermal Plant project represented an opportunity for Air Force Logistics Command to gain evaluative experience with point focussing solar industrial process heat technologies, as developed for the Department of Energy by NASA/JPL. The project built upon Applied Concepts Corporation's previous experience in characterizing USAF process heat requirements and in the installation, test and evaluation of advanced solar energy systems.

The project team refurbished and installed a Power Kinetics Inc. (PKI) designed and manufactured Fresnel mirror point focussing collector to provide 100,000 BTU per hour of saturated steam at 100 psi to the distribution system at the Worldwide Landing Gear Facility at the Ogden Air Logistics Center, Hill AFB, Utah. The plant and its data acquisition system were operated and maintained by Base Civil Engineers of the 2849th Air Base Group. The installation was sponsored by Hqs AFLC. Evaluation of the plant was sponsored by the Air Force Engineering and Service Center (AFESC).

Installation and check out of the plant were completed in November 1982, and a three month evaluation period was begun at that time. Plant evaluation was in three areas: performance testing, operability testing, and system failure analysis.

The plant proved its capability to deliver the desired energy product in a USAF industrial environment. The PKI collector proved capable of energy conversion at insolation levels up to 25% below design minimum. The plant and the project were negatively affected by severe winter weather, with total insolation during the test period 60 per cent less than the expected value. Environmental effects reduced plant availability to 55 per cent. Only five, minimally "good" operating days were experienced during the test period. The subsequent lack of performance data prohibits the drawing of general conclusions regarding system performance.

System operability was rated generally high. the only inhibiting factor was the difficulty in procuring replacement parts for rapid repair under USAF stockage and procurement policies.

No inherently serious system failures were recorded, although a thermostatic valve malfunction in the freeze protection system ultimately took 30 days to repair. This was due to a combination of weather, and parts procurement factors. A series of minor problems, none of which were inherent to solar technologies, indicate that system reliability must be improved prior to general USAF utilization of point focussing technologies.

The general conclusion of the project is that further plant evaluation is necessary, especially during the summer months. The technology exhibited a potential to contribute to USAF energy goals, subject to further development, especially in the area of system durability and reliability. Further plant operating experience can contribute to such product improvement on the one hand, and support a more detailed characterization of performance on the other.

APPLIED CONCEPTS CORPORATION

Table of Contents

	Page
Foreword	i
Abstract & Summary	ii
Table of Contents	iv
List of Figures	v
I. Introduction	1
A. Origins	1
B. Objective	3
C. Methods	3
D. Non-Technical Overview of the Project's Progress	4
II. The AFLC Solar Thermal Plant	5
A. System Design	5
B. Plant Design	5
III. Evaluation Methods and Approach	17
A. Elements of the Analysis	17
B. Failure Analysis	17
C. Operability Testing	18
D. Performance Testing	19
IV. Experiment Results	23
A. System Failure Analysis	23
1. Drives	26
2. Controls	27
3. Fluid Loop	27
B. Operability Testing	28
C. Performance Testing	36
V. Conclusions and Recommendations	51
VI. New Technology	53
Appendix A: Description of PKI Collector	55

List of Figures

Figure #	Title	Page
Figure 1:	AFLC Solar Thermal Plant Project Milestones	4
Figure 2:	Photograph of Ogden AFLC Solar Thermal Plant	6
Figure 3:	Solar Plant Site and Site Improvements	7
Figure 4:	Solar Plant Design: Utilities	8
Figure 5:	Solar Plant Design: Foundation	9
Figure 6: (A, B, & C)	Solar Plant Design: Details	10
Figure 7:	Solar Plant Fluid Loop As Built	13
Figure 8: (A, B, & C)	Solar Plant Wiring Diagram As Built	14
Figure 9:	Data and Instrumentation	20
Figure 10:	Plant Failure Summary	24
Figure 11:	System Operation Summary	30
Figure 12A:	Ogden ALC-System Operation Summary: Table-November 1982	31
Figure 12B:	Ogden ALC-System Operation Summary: Table-December 1982	32
Figure 12C:	Ogden ALC-System Operation Summary: Table-January 1983	33
Figure 12D:	Ogden ALC-System Operation Summary: Table-February 1983	34
Figure 13:	Performance on Minimally "Good" Insolation Days	38
Figure 14A:	Hill Air Force Base-Monthly Performance-November 1982	40
Figure 14B:	Hill Air Force Base-Monthly Performance-December 1982	41
Figure 14C:	Hill Air Force Base-Monthly Performance-January 1983	42

Figure #	Title	Page
Figure 14D:	Hill Air Force Base-Monthly Performance-February 1983	43
Figure 15:	Representative Hourly Performance Data	45
Figure 16A:	System Performance-November 12, 1982	46
Figure 16B:	System Performance-January 13, 1983	47
Figure 16C:	System Performance-November 17, 1983	48

I. Introduction

A. Origins

This project to install and evaluate an advanced, point focussing solar process heat plant at the Ogden Air Logistics Center had its origins in an earlier study prepared for the Air Force Engineering and Services Center (AFESC) through NASA's Jet Propulsion Laboratory by Applied Concepts Corporation. That study had three objectives:

1) To characterize and categorize USAF process heat applications in terms appropriate for assessing solar thermal technologies.

2) To evaluate USAF process heat applications for solar thermal technologies' utilization based upon their potentials for operational effectiveness, cost effectiveness and fuel displacement.

3) To select specific USAF sites for near term operational test and evaluation of solar thermal technologies.

The USAF Solar Thermal Applications Study had three parts. The first task analyzed USAF process heat applications and compared these requirements to five categories of solar technologies. The second task was a case study in which five specific USAF process heat consuming applications were compared to point focussing systems to project their cost and operational effectiveness in those applications. The third task was to prepare a preliminary design for a solar thermal plant at the Ogden Air Logistics Center (ALC) at Hill AFB, Utah. Among the recommendations of the generic analytical portion of that study were the following:

1) USAF may benefit from the utilization of solar process heat technologies. Potential benefits include both displacement of fossil fuel consumption and projected budgetary dollar savings. Therefore, USAF should attempt to gain operating experience with these technologies in the near term.

2) Because the best technologies are not yet known, and may not be limited to a single technology set, USAF should seek diversified experience with a variety of systems in different applications and insolation areas.

3) Parabolic dish systems show potential for near term (1-3 year) price decreases. Joint technology development experiments can help realize this potential, and consequently, significant savings to USAF.

The study noted that flat plate and parabolic trough solar process heat systems were commercially available for procurement and evaluation, whereas solar ponds and parabolic dishes were candidates for technology applications development programs and longer term assessment.

The following conclusions were among the results of the case study analysis:

1) Point focussing solar thermal heat plants showed a sufficient potential for near-term cost effectiveness to warrant a USAF operational test and evaluation of this technology.

2) A test and evaluation plant should be sited in a high insolation area to maximize return on investment in the plant to be tested. The study recommended a southwestern location such as Lowry, which was a case study site, Hill, McClellan, Kirkland, or Davis-Monthan AFBs.

The report of the above work was submitted to JPL and AFESC in September 1981. About that time, Applied Concepts and JPL began discussions with HQs USAF Logistics Command (AFLC) regarding the desirability of installing a solar process heat plant for operational evaluation at one of the nation's Air Logistic Centers (ALCs), the Air Force's major users of process heat. As part of the evaluation process, a preliminary design for a point focussing plant at Hill AFB, was prepared as a third, additional task to the project.

Sometime in November/December 1981, a Power Kinetics Inc. solar collector became available as government owned surplus, when the Department of Energy sponsored, Mid-temperature Test Facility at Sandia National Laboratories, Albuquerque (SNLA), was dismantled. As a consequence, a decision was reached among AFLC, ESL, and JPL to remove and refurbish that collector for installation at Hill AFB, Utah to be a test plant for the provision of process steam to the Worldwide Landing Gear Maintenance Facility at the Ogden ALC.

The AFLC Solar Thermal Plant Project thus originated through cooperation to reach mutual objectives among several parties. Participating and contributing organizations in the project included:

1) The Deputy Chief of Staff for Engineering and Services, Headquarters, Air Force Logistics Command (HQ AFLC/DE). As the principal sponsoring agency, AFLC was interested in evaluating the technology for its potential to contribute to reduced fuel costs and decreased vulnerability to fuel supply disruptions in AFLC facilities.

2) The Air Force Engineering and Services Laboratory (HQ AFESC/RD). This agency is responsible for research and development in the area of USAF facilities energy.

3) The Base Civil Engineer of the 2849th Air Base Group (2849 ABG/DE). This is the group at Hill AFB responsible for maintaining basewide energy systems.

4) NASA JPL's Solar Thermal Power Systems Project. This office has the responsibility on behalf of the Department of Energy to conduct research into distributed receiver, point focussing solar energy

The other members of the project team, in support of these agencies were:

1) Applied Concepts Corporation which had the unique experience of having installed and tested the first point focussing industrial process heat plant in the U.S. at Capitol Concrete Products, Topeka, Kansas. They had installed the original prototype plant at SNLA, and were knowledgeable of USAF process heat requirements as a result of their analytical work for ESL.

2) Power Kinetics Inc., which was the developer and manufacturer of the solar collectors used at SNLA and at Capitol Concrete Products.

B. Objective

This final report is responsive to the evaluative portion of the project, which was sponsored by (HQ AFESC/RD). The objective of the operational test and evaluation of the point focussing collector, as expressed by AFESC was, to gather information in support of "...the HQ AFESC/RD facility energy research and development program to develop recommended criteria for using high temperature solar energy technologies to provide prime and auxiliary thermal power to processes at ALCs and other fixed facilities." The approach to meeting this objective was developed by JPL and Applied Concepts Corp. as reported in Applied Concepts' Technical Report K10-04-82, "Plant Evaluation Plan." Sufficient resources were provided to support three months' evaluative testing.

C. Methods

The evaluation was undertaken through three parallel approaches as appropriate for the three types of information sought. These were:

1) Performance Testing
2) Operability Testing
3) System Failure Analysis.

Performance testing was to be accomplished through the installation and utilization of an automated data acquisition system (DAS) which continuously collected and stored information on the collector's environment and operation through various sensors controlled by an Apple II computer. Operability testing was documented through the maintenance of user logs. System failure analysis was conducted using "System Outage Reports," submitted by the Base Civil Engineer (BCE) staff. The details of testing are reported in Section II below.

Figure 1: AFLC Solar Thermal Plant Project Milestones

April 1982	Start of Contract.
April 1982	Disassembly of SNLA plant completed.
June 1982	Collector refurbishment completed.
September 1982	Installation completed.
November 1982	Check out testing completed.
November 1982	Begin evaluation period.
February 1983	End evaluation period.
April 1983	Final report.

D. Non-Technical Overview of the Project's Progress

Figure 1 presents a list of milestones which constitute a record of the course of the project. It had originally been hoped to complete installation and check out by the end of July 1982, but a combination of events, including delays in project initiation, in procurement of site improvements and in check out testing due to rainy weather meant that user operation was delayed from August to November 1982. This was to have unfortunate consequences for operational evaluation of the plant, by postponing the test period to the months of lowest diurnal insolation. Moreover, the rains of September were followed by what may have been, and certainly seemed like the cloudiest winter in Utah history.

Total direct normal insolation during the test period was but 40% of the expected value. This meant that only 7% of annual expected solar energy was available during the test period. Moreover, environmental impacts on the plant, (freezing and, subsequent to the experiment, high winds), combined with a problem of securing generally available, but unstocked parts, through USAF procurement procedures, [illegible] lower plant availability to 55 per cent. These problems are detailed in Chapter IV, and subsequent recommendations are presented in Chapter V.

In spite of these problems, sufficient inforation was gathered to verify plant capability to provide the required energy product, to assess operability and to prepare a system failure analysis. The limited opportunity to evaluate plant performance, however, reduces the utility of the information which was gathered in this area.

II. The AFLC Solar Thermal Plant

The following description of the AFLC solar thermal plant is presented at this point for reference in reading the report which follows.

A. System Design

The baseline design for the PKI solar collector was that presented in detail to JPL at an Engineering Review held in March 1981 as part of the Thermal Engineering Experiment, which placed collectors into operation at SNLA and at Capitol Concrete Products, Topeka, Kansas. As a consequence of lessons learned at SNLA and Topeka, it was possible to incorporate certain improvements into the equipment subsequent to its dismantlement at SNLA and prior to its installation at Hill AFB. This included new, adjustable stand offs for attaching the mirror assemblies to the space frame, and improved adjustment plates for attaching mirror assemblies to the elevation drive mechanism. These improvements supported ease of installation and adjustment of focus. In addition, changes were made in the fluid loop to permit operation at the higher pressures utilized at the Worldwide Landing Gear Maintenance Facility, and to improve reliability of boiler level switches.

As per the agreement between JPL and PKI, proprietary design information has not been made available for general distribution. A brief description of the collector as provided by PKI is found as an appendix to this report. A photograph of the installed system is at Figure 2.

B. Plant Design

The following engineering drawings define the Ogden ALC plant. The first figures represent the information provided to Ogden ALC for making site improvements. These include:

Figure 3: Solar Plant Site and Site Improvements
Figure 4: Solar Plant Design: Utilities
Figure 5: Solar Plant Design: Foundation
and Figure 6: Solar Plant Design: Details.

Figure 7 provides a schematic of the fluid loop, as built, and Figure 8 presents a wiring diagram for the plant.

ORIGINAL PAGE IS
OF POOR QUALITY

Figure 2: Photographs of PKI Collector

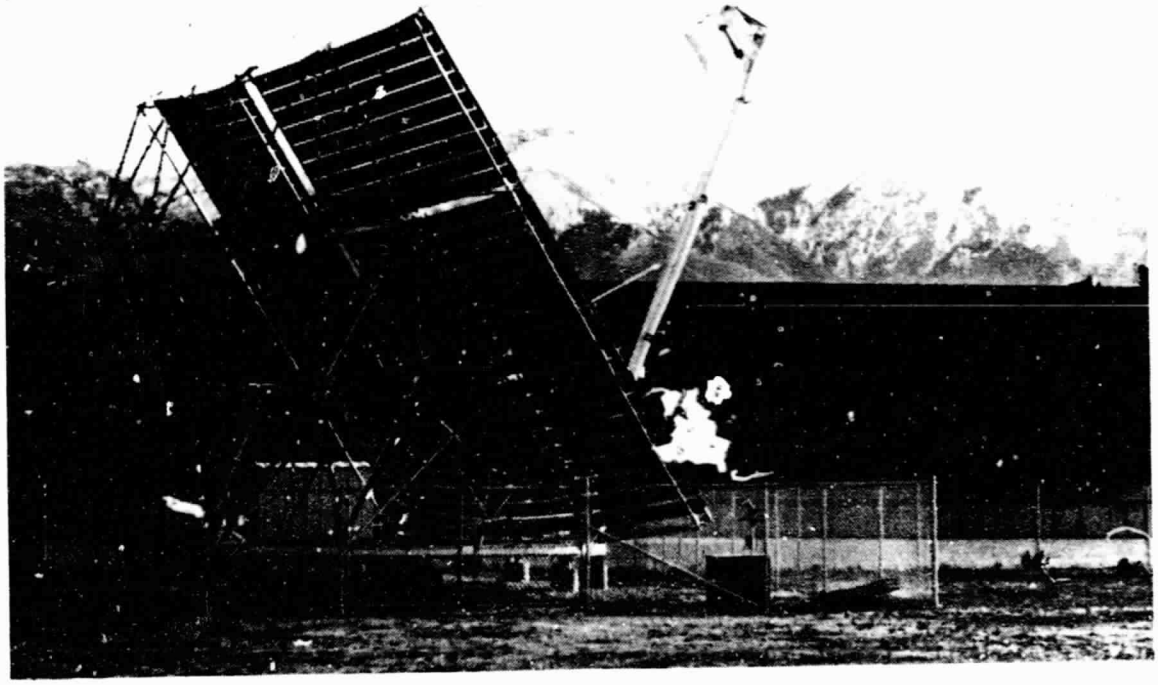

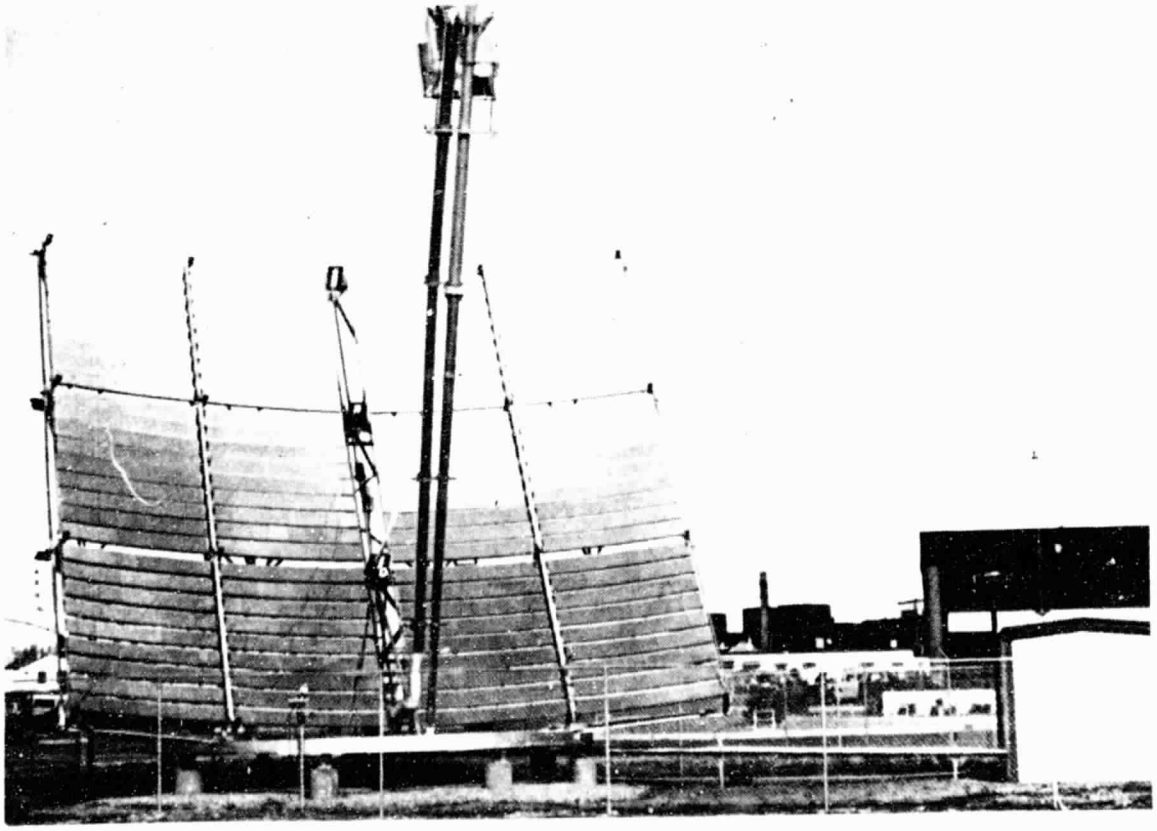

ORIGINAL PAGE IS
OF POOR QUALITY

Figure 3: Solar Plant Site and Site Improvements

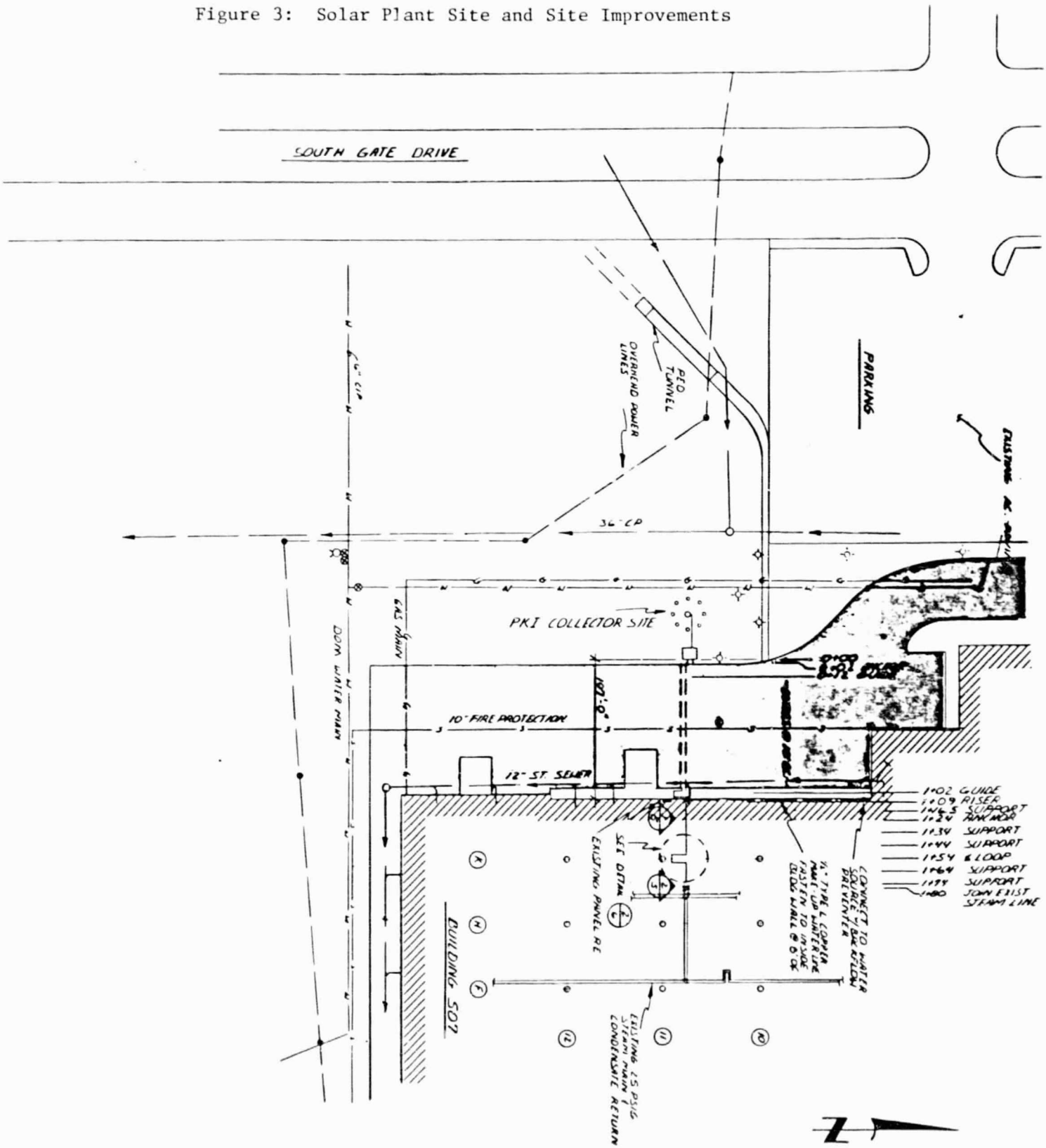

APPLIED CONCEPTS CORPORATION	SITE IMPROVEMENT PLANS PKI INSTALLATION @ BLDG. 507 HILL AFB , AFLC, OGDEN, UTAH	DRAWN BY S. POND DATE 18 AUG 81 CHECKED DATE SCALE 1" = 50' DRAWING NO K02-003 SHEET 1 OF 6

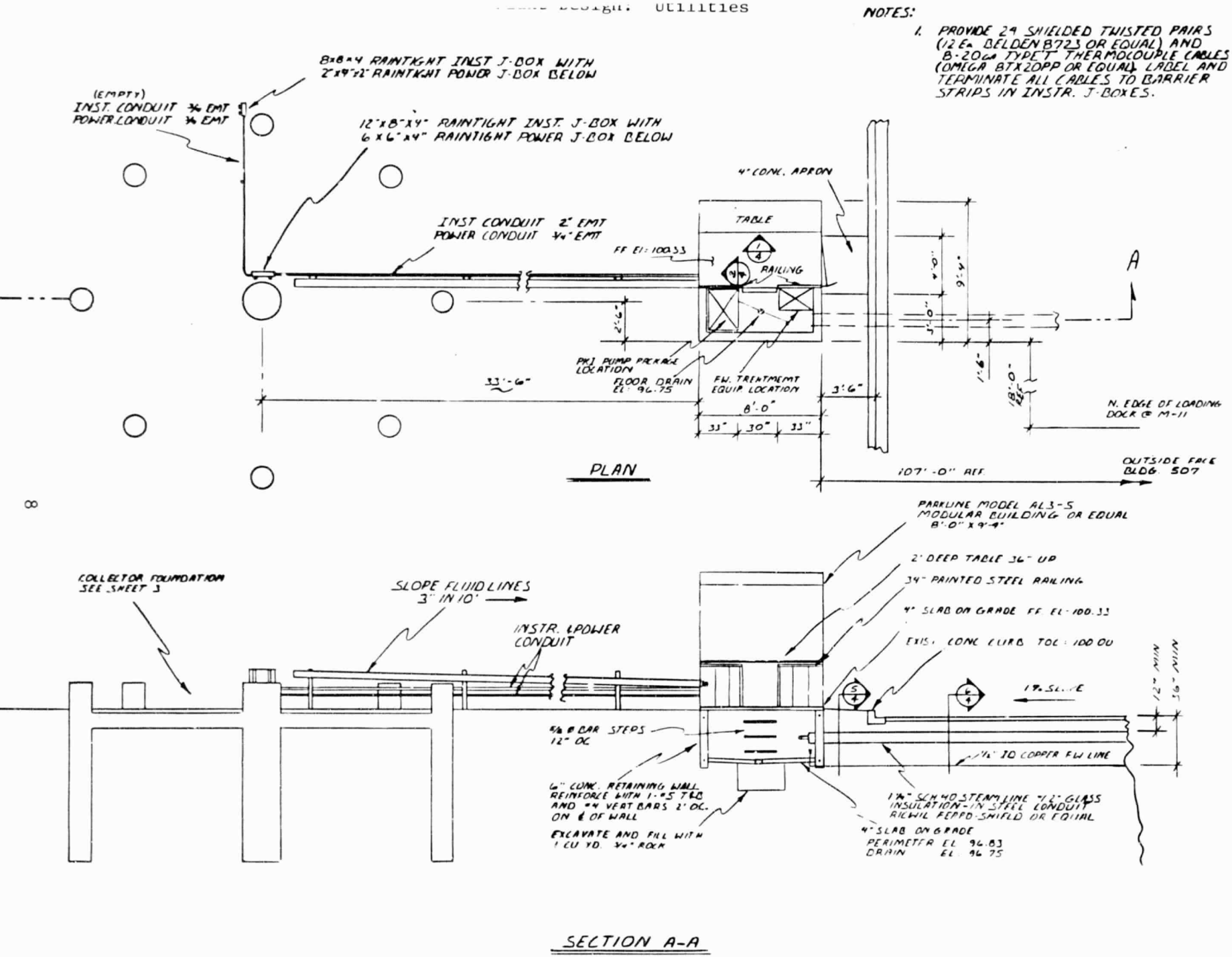

DRAWN BY S. POND
DATE 24 SEP 1981
SCALE 1/4" = 1'-0"
K02-003
SHEET 2 OF 6

IMPROVEMENTS - HAFB

ORIGINAL PAGE IS OF POOR QUALITY

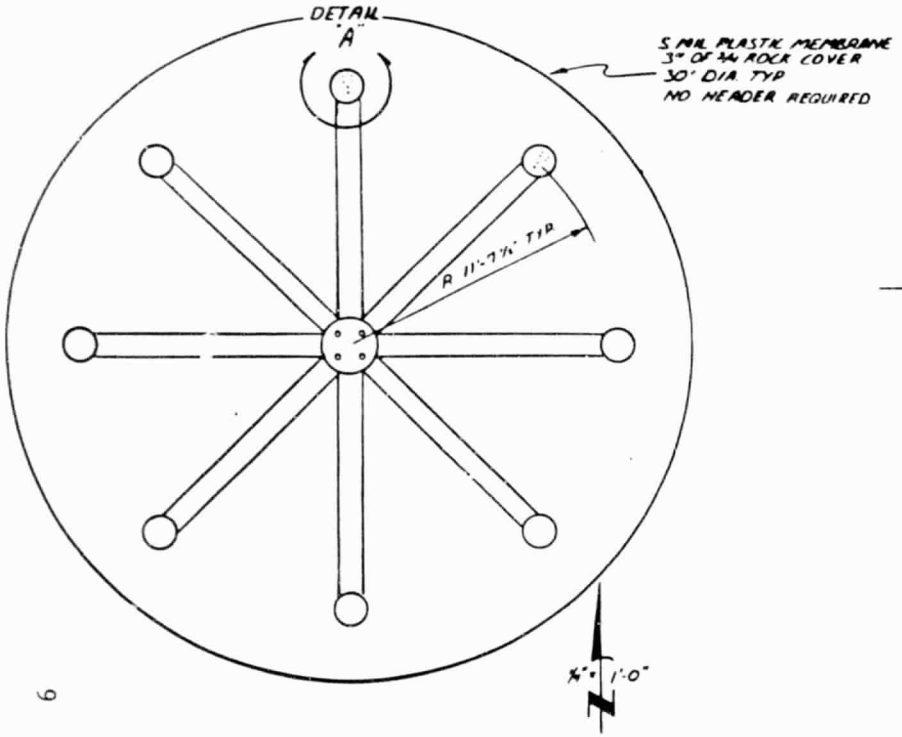

NOTES:

1. POUR ALL SUBSURFACE CONCRETE AGAINST UNDISTURBED SOIL
2. ALL CONCRETE TO BE 3000 PSI MIN 28 DAY COMP STRENGTH
3. ALL REINFORCING TO MEET ASTM A615 SPECS GRADE 40 OR HIGHER

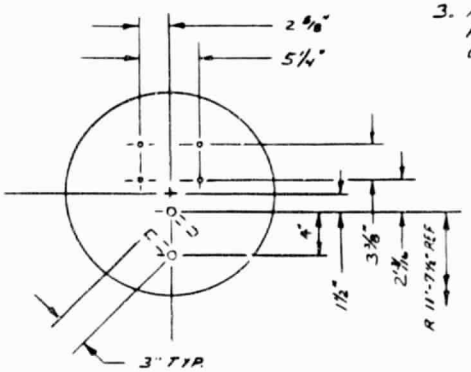

DETAIL "A"
1 1/2" = 1'-0"

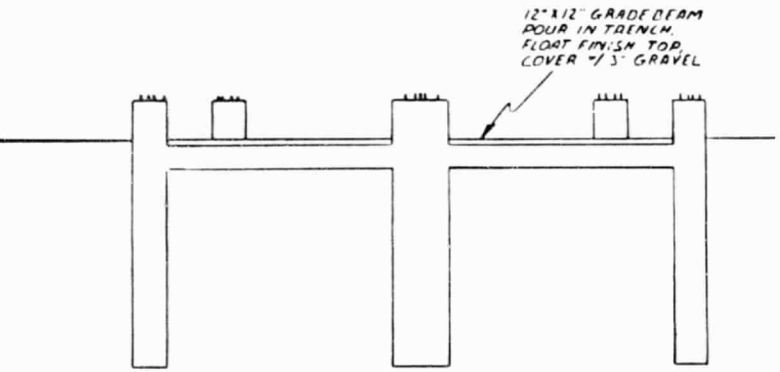

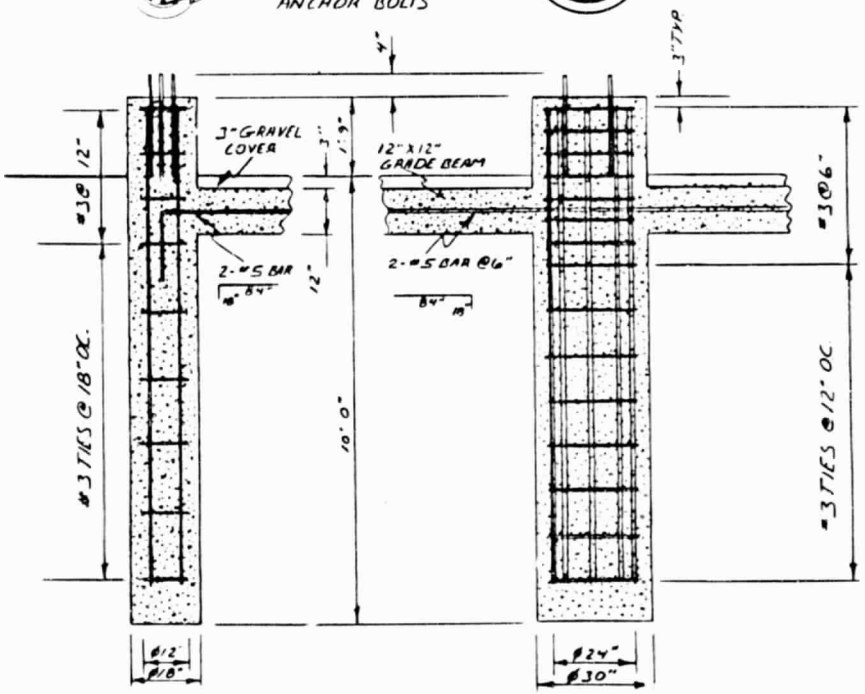

PERIMETER PIER
1" = 1'-0"

CENTER PIER
1" = 1'-0"

ORIGINAL PAGE IS OF POOR QUALITY

DRAWN BY	S. POND
DATE	24 SEP 1981
CHECKED	
DATE	
SCALE	AS NOTED
DRAWING NO.	K02-003

FOUNDATION PLAN - PKI 80m² CONCENTRATOR

APPLIED CONCEPTS CORPORATION

Figure 6A: Solar Plant Design: Details

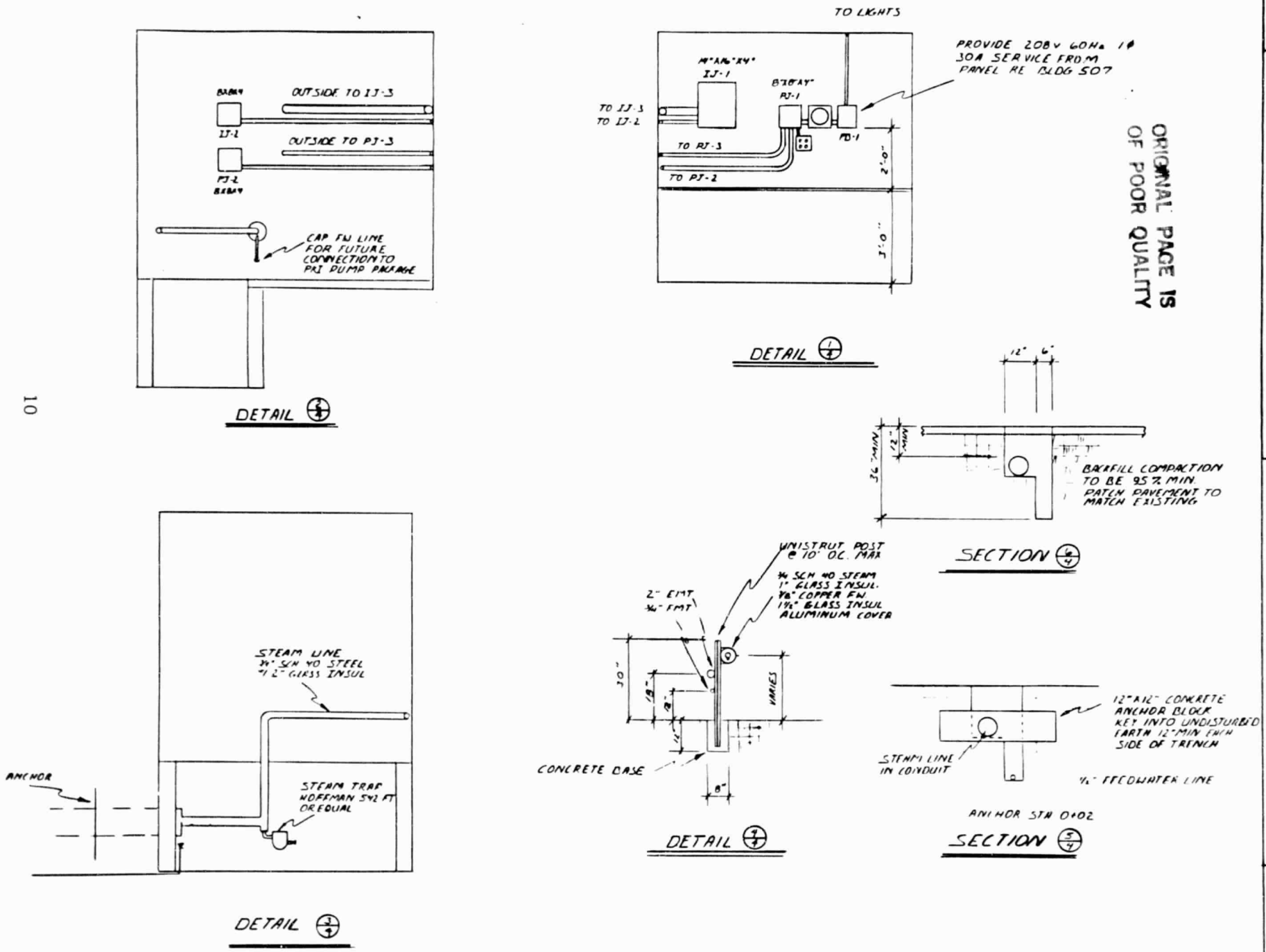

ORIGINAL PAGE IS OF POOR QUALITY

Figure 6B: Solar Plant Design: Details

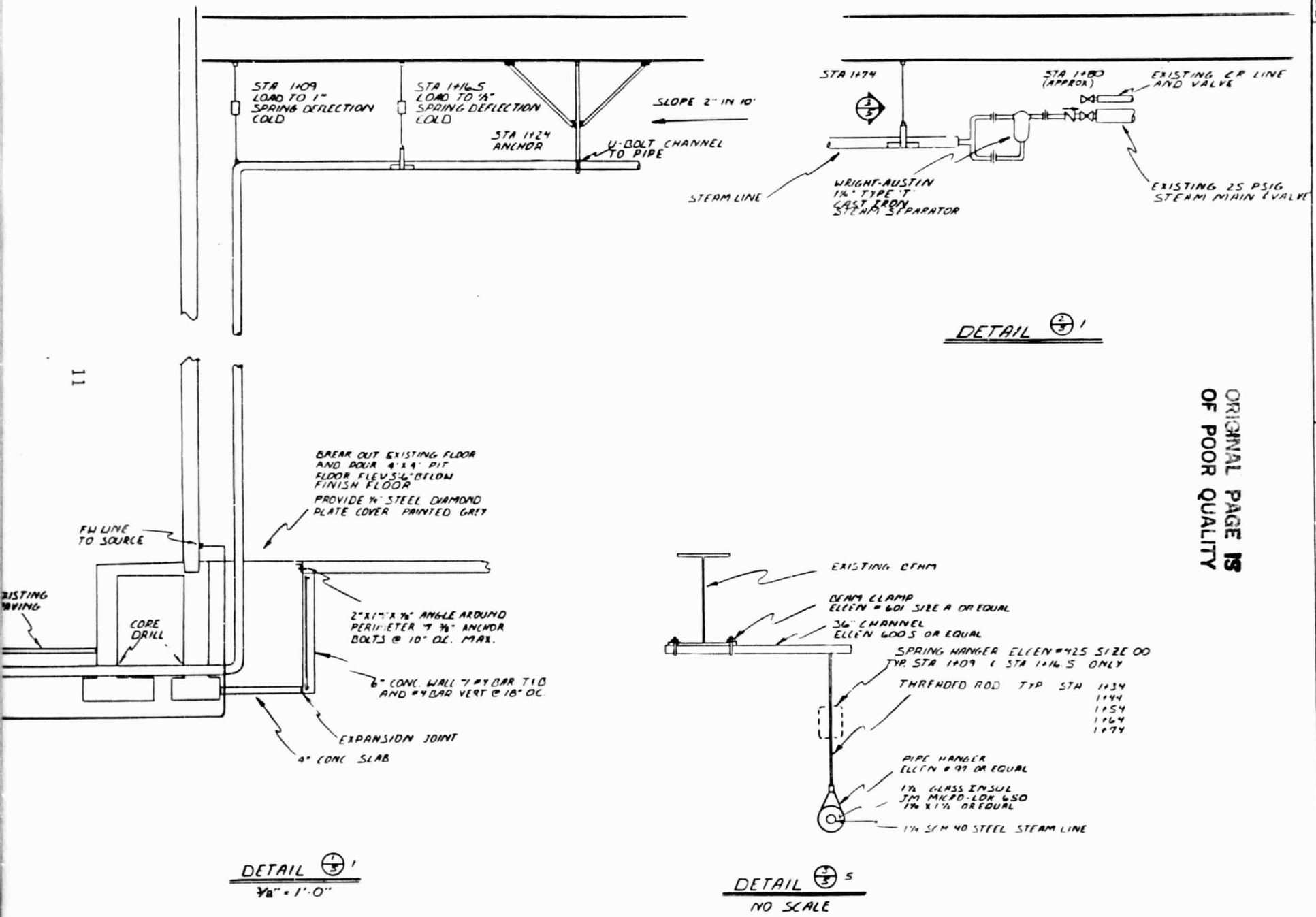

ORIGINAL PAGE IS
OF POOR QUALITY

Figure 6B: Solar Plant Design: Details

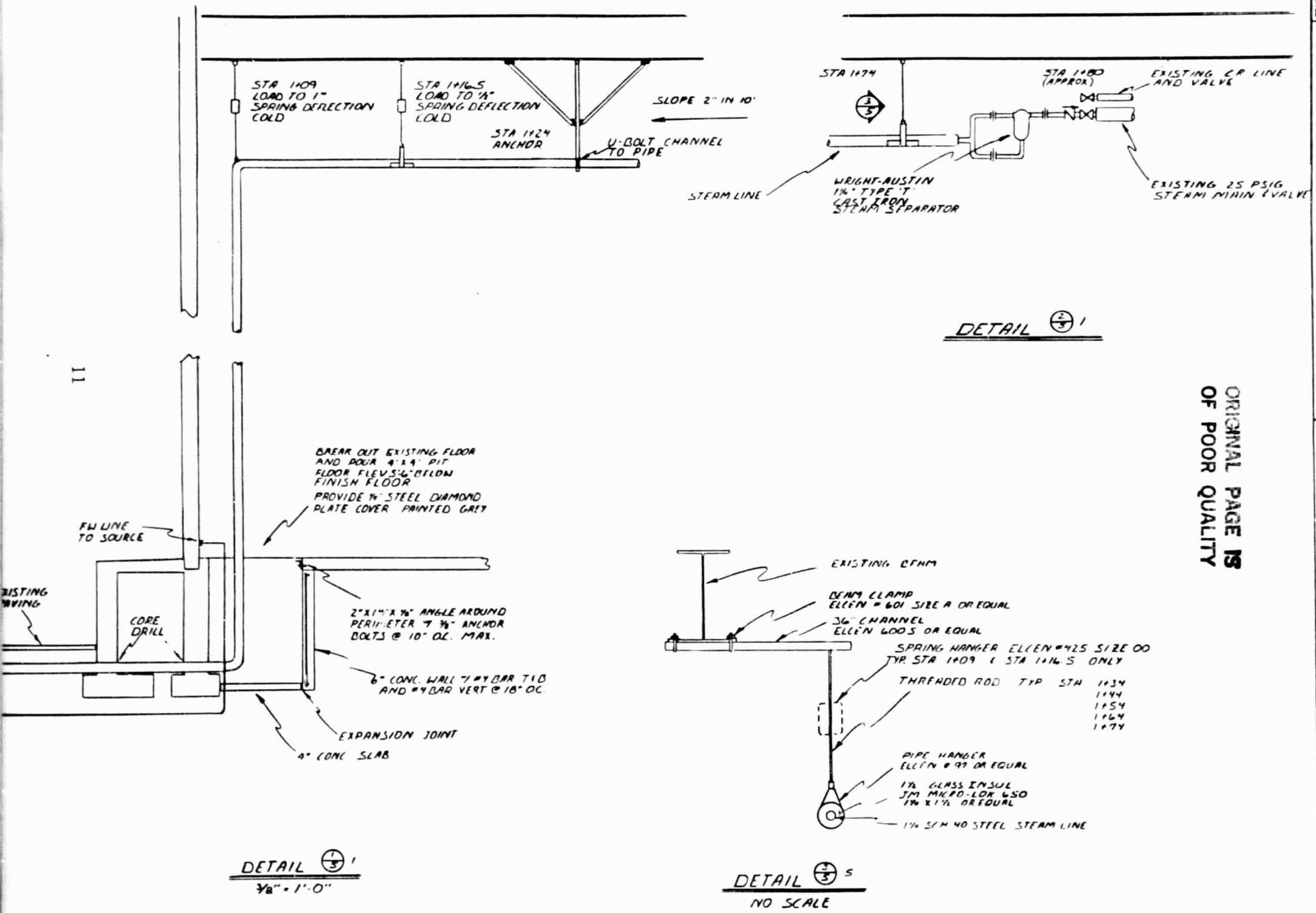

11

ORIGINAL PAGE IS
OF POOR QUALITY

DRAWN BY S. BOND
DATE 14 SEP 79
CHECKED
DATE
SCALE AS NOTED
DRAWING NO. K02-003

DETAILS

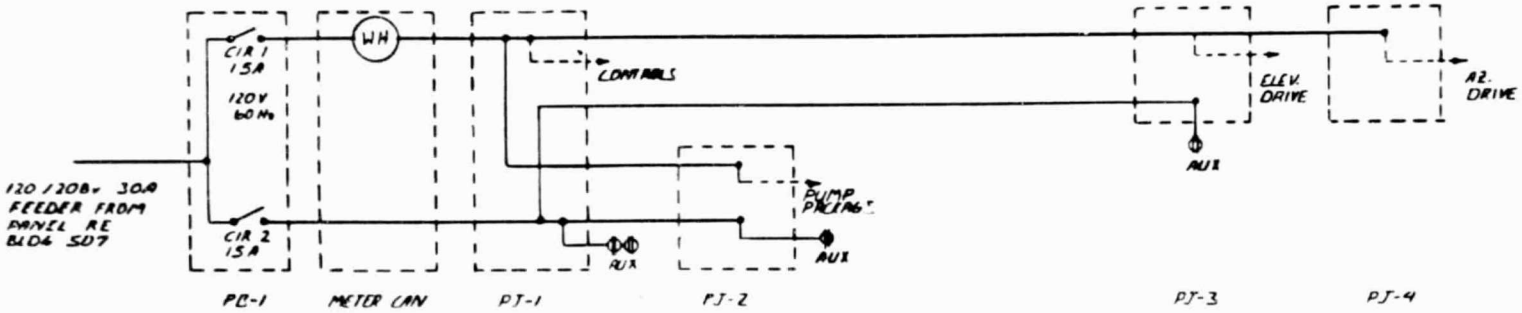

POWER WIRING DETAIL 1/6

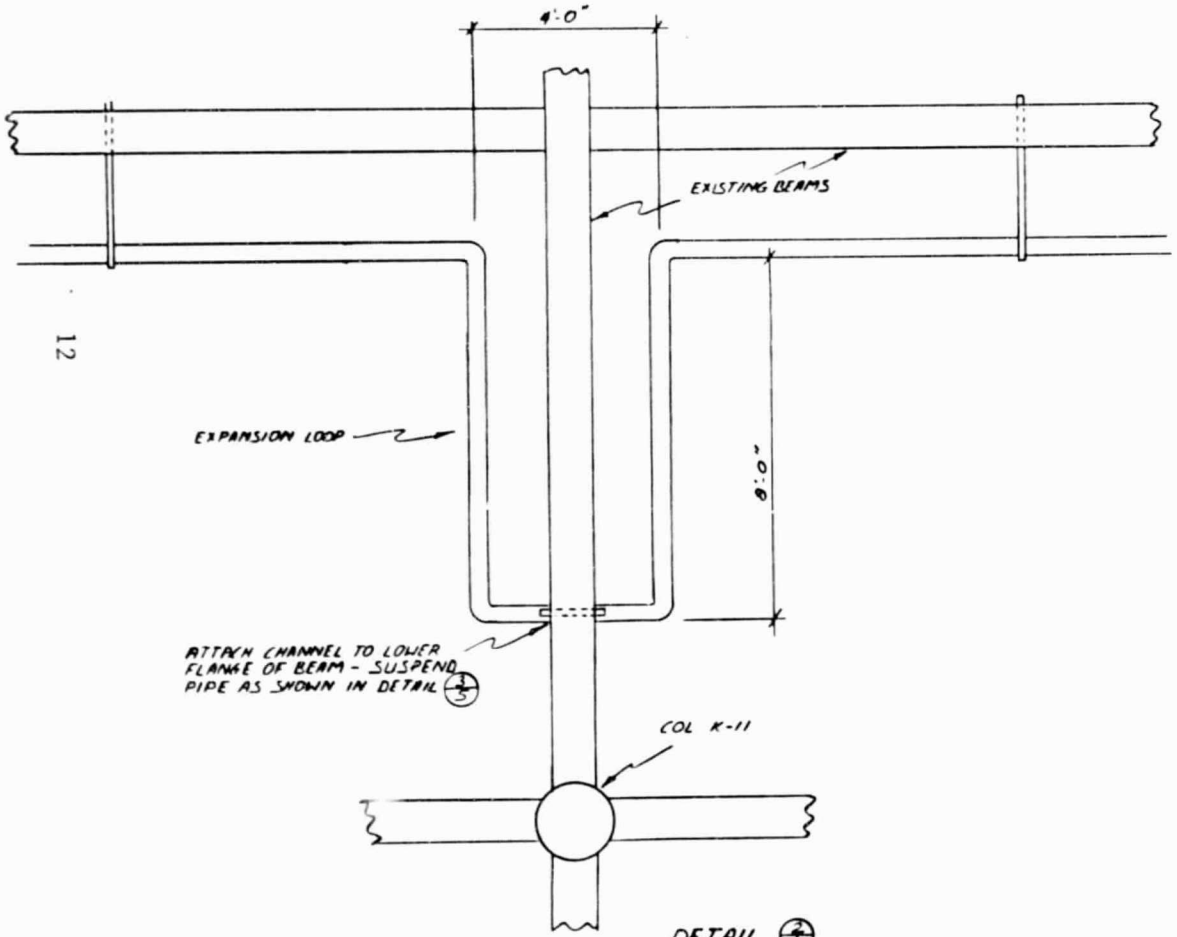

DETAIL 2/6

1/2" = 1'-0"

ORIGINAL PAGE IS
OF POOR QUALITY

DRAWN BY S. POND
DATE 28 SEP 19
CHECKED
DATE
SCALE AS NOTED
DRAWING NO K02-003
SHEET 6 OF 6

DETAILS

Figure 7: Solar Plant Fluid Loop As Built

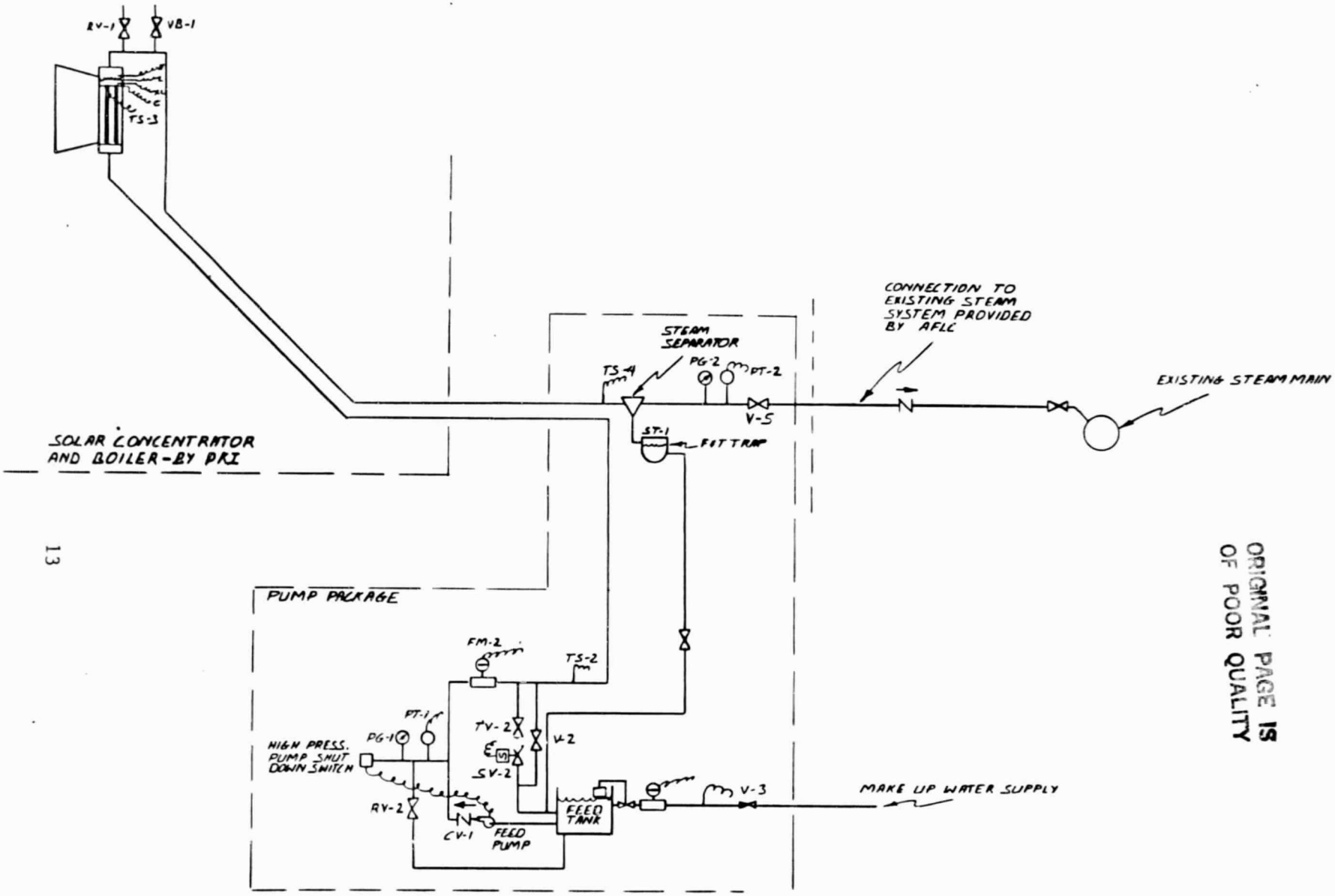

ORIGINAL PAGE IS OF POOR QUALITY

FLUID LOOP SCHEMATIC-AS BUILT
PKI COLLECTOR @ HILL AFB, OGDEN, UTAH

APPLIED CONCEPTS CORPORATION

DRAWN BY SLP
DATE OCT 1982
CHECKED S. BAND
DATE NOV 1982
SCALE NONE
DRAWING NO. K11-11
SHEET 1 OF 1

Figure 8B: Solar Plant Wiring Diagram As Built

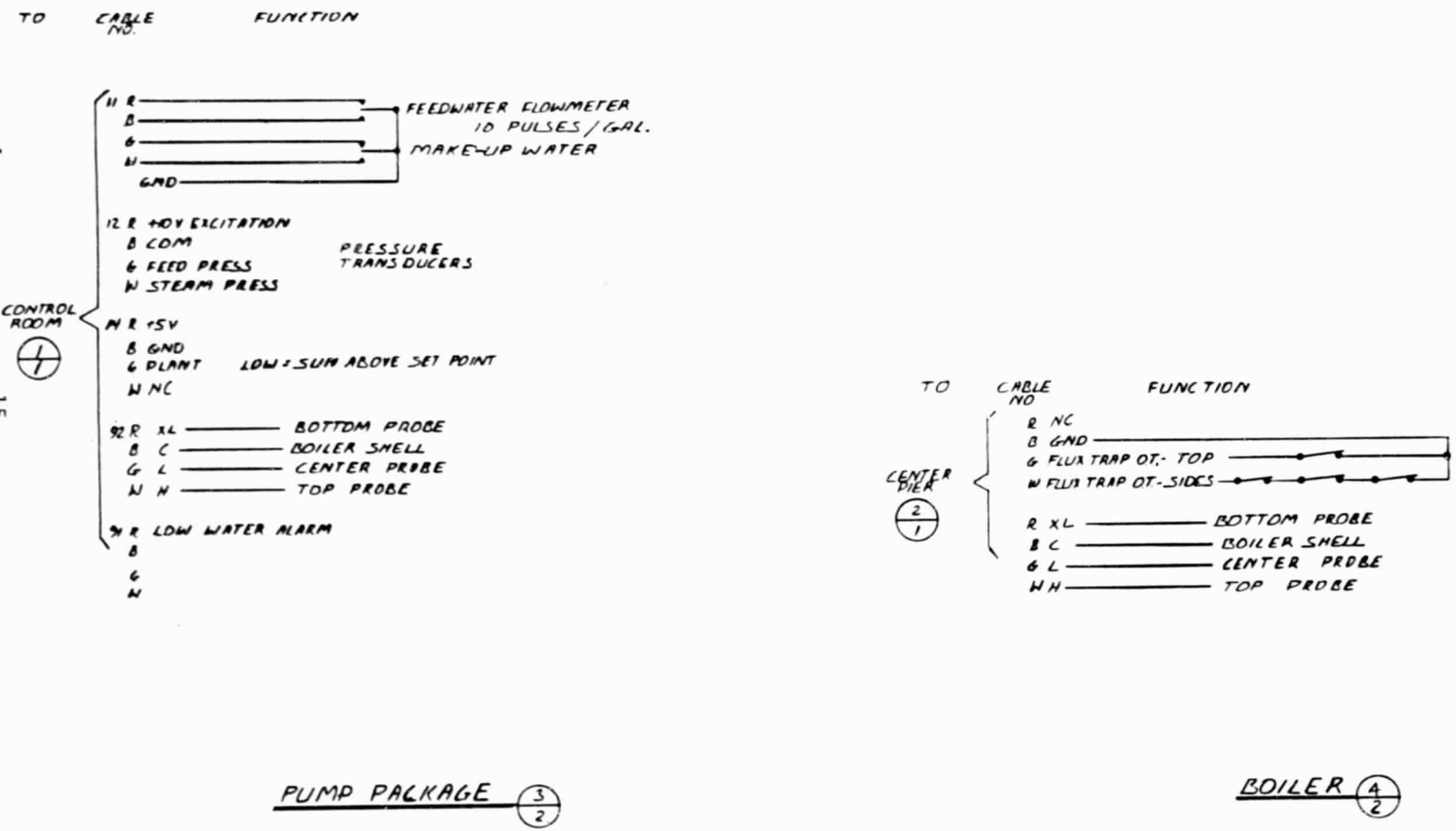

ORIGINAL PAGE IS
OF POOR QUALITY

WIRING DIAGRAM-AS BUILT
DETAILS

DRAWN SKP
DATE OCT 1981
CHECKED S. BOND
DATE OCT 1981
SCALE NONE
DRAWING K11-10

ORIGINAL PAGE IS
OF POOR QUALITY

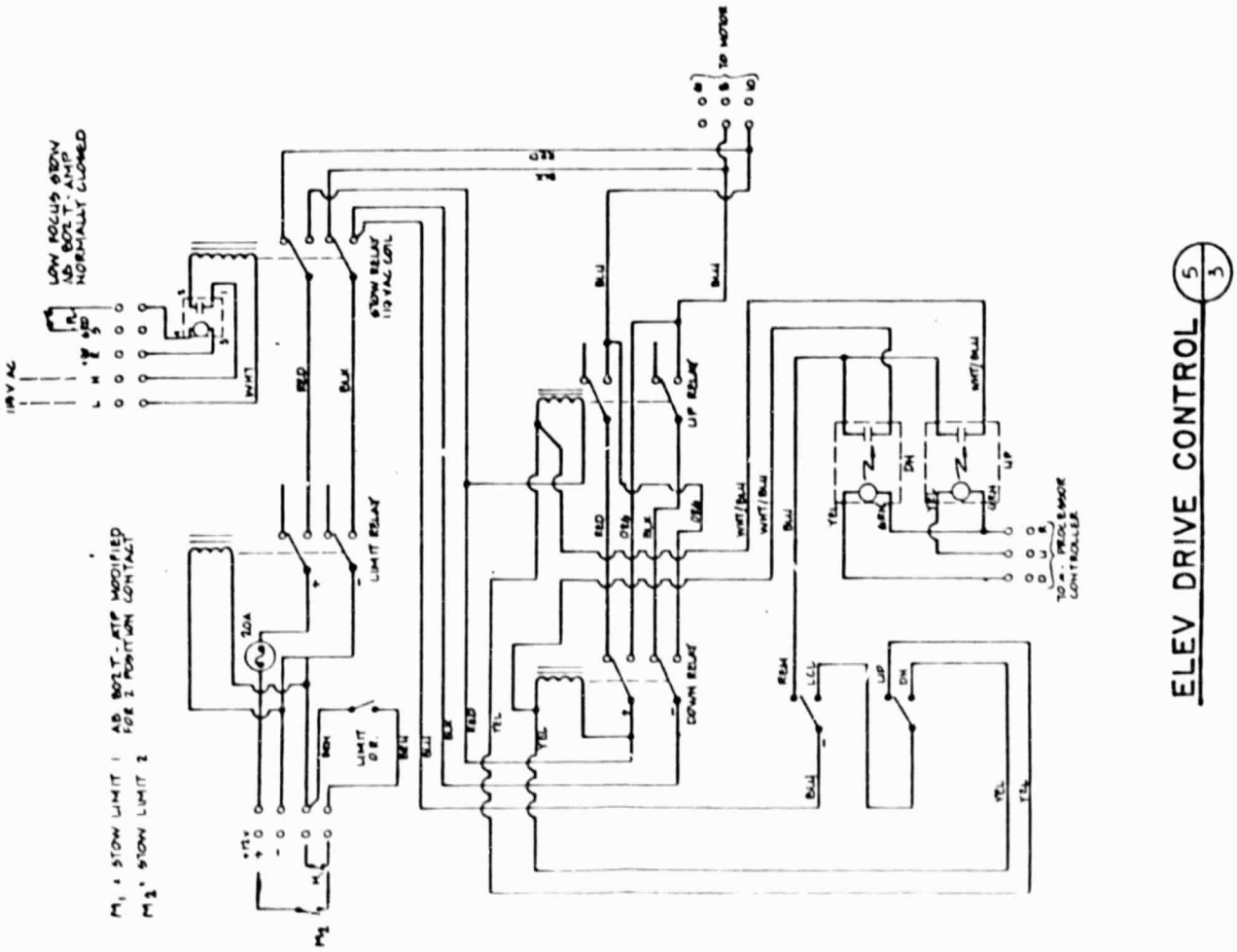

Figure 8C: Solar Plant Wiring Diagram As Built

III. Evaulation Methods and Approach

A. Elements of the Analysis

JPL established the following criteria for plant evaluation planning:

"The Plant Evaluation Plan shall identify how the following performance and operability parameters will be assessed:

1) Plant Steam Quality
2) Plant Thermal Power
3) Plant Parasitic Power
4) Plant Energy Output
5) Estimated Peak Plant Energy Contribution
6) Estimated Maximum Hourly Energy Contribution
7) Plant Efficiency
8) Plant Operating Time
9) Reliability, Availability, Maintainability
   9.1 Planned Outage Rate
   9.2 Forced Outage Rate
   9.3 Plant Availability
   9.4 Mean Time to Repair
10) Failure Modes

The first seven parameters can be seen to be performance variables. Items 8 through 9.4 are elements of operability. The last item relates to understanding design and field engineering factors through failure analysis. Accordingly, testing was conceptually divided into three parts:

1) System failure analysis
2) Operability testing
3) Performance testing

Each of these analytical methods is discussed separately below. The results of testing are presented in Chapter IV, below.

B. Failure Analysis

This aspect of plant evaluation was to be responsive to two objectives:

1) Understand the failure modes of the PKI collector system.

2) Provide feedback to the system-level hardware and software processes.

A formal, failure reporting system was established, wherein each plant failure or outage was documented with the following information:

1) Activity Number (sequential)
2) Date and Time of Failure
3) Person Detecting Failure
4) Date and Time of Notification to Applied Concepts
5) Description of Symptoms
6) Diagnosis (cause of outage)
7) Description of Failure (damage by subsystem)
8) Corrective Action Taken
9) Time System Returned to Operation
10) Analysis of Safety Implications

The system was implemented during check out testing and continued through February 7. Reports subsequent to December 29 were made orally to the project engineer and documented in the user's log. This approach to failure analysis was modelled on the successful approach used for the Capitol Concrete Experiment, and proved equally productive, leading to useful evaluations of plant failures and providing good communcations to systems level processes. The results of lessons learned were thus made available to the user, the installer, and the system manufacturer to incorporate into future operational procedures, manufacturing and plant design.

C. Operability Testing

Operability testing was to satisfy three objectives:

1) Identify and quantify the impact of operating the experimental plant on the daily operations activities of user personnel and on user manning requirements at Ogden ACC.

2) Identify the impact, if any, of the installation and operation of the experimental plant on the local environment.

3) Identify the impact, if any, of the installation and operation of the PKI collector system on potential acceptance by AFLC activities.

These objectives were to be satisfied through user reporting. In addition to collection of the weekly log sheets, periodic discussions were held with Mr. Neal Scheel, project manager for the 2849th AB Group.

D. Performance Testing

1. Data Acquisition

Performance testing was conducted to determine the extent to which the experimental plant would contribute to meeting the user's energy requirements. This required a measurement of plant energy output, parasitic power, and available solar energy for conversion over time. To this end, a data acquisition system was assembled and installed integral with the solar energy plant.

Figure 9 presents a list of the data to be collected, and identifies for each datum the instrument which recorded it. Performance data was processed and recorded by a data acquisition system (DAS) which included a Fluke Model 2000 B Data Logger which received the signal output from the normal incidence pyrheliometer (NIP), pyranometer, watthour meter, pressure gauges, and five thermocouples. The Fluke corrected the thermocouples, and, when requested by an Apple II Plus computer, sent the data across an RS 232 communication link to the Apple for CRT display, for transfer to hard copy via an Epson MX80 printer, and for storage on 5 1/4 inch magnetic diskettes.

The Apple also received and recorded collector status data from the system controller and data from the flow meter which measured makeup water input.

Data recorded on diskettes during operation at Ogden ALC were forwarded to PKI to be processed into daily performance tables. These tables were then sent to Applied Concepts Corporation for integration into reports. Weekly log sheets were filled out by the user and also forwarded to Applied Concepts Corporation for integration into the reporting cycle.

2. Assumptions and Approximations

The following assumptions were applied to data reduction:

1) The solar collector sees the same insolation as the NIP. (In fact, it sees less, a 2 degree angle as opposed to 5 degree).

2) The aperture of the collector is 80.3 m^2. In fact it is less due to edge contact and system geometry.

3) For insolation, average values consisting of six data points per hour were used.

4) Average steady state conditions for feedwater and steam output enthalpy were used for calculating output.

5) The level of confidence introduced by known approximations is ± 2%.

Figure 9: Data and Instrumentation

Datum	Description/Remarks	Units	Instrumentation
FM	Net feedwater input	gal.	Flow Scan 300-1 Turbine Flowmeter
P_1	System feedwater pressure	p.s.i.	Pressure Gauge
P_2	System steam pressure	p.s.i.	Pressure Gauge
T_0	Ambient temperature	^oC	Thermocouple
T_1	Feedwater temperature	^oC	Thermocouple
T_2	Received feedwater temperature	^oC	Thermocouple
T_3	Boiler temperature	^oC	Thermocouple
T_4	Output temperature	^oC	Thermocouple
t	Time of operation (controller status report)	hrs.	Controller
I_n	Incident direct normal insolation	kw/m^2	Epley NIP
I_h	Incident insolation on a horizontal plane	kw/m^2	Epley Pyranometer
ΔK_h	Parasitic energy consumption	watt hours	Watthour meter

Plant conversion efficiency on an hourly basis was thus given by the equation:

$$E_h = \frac{O_h}{C.I_h.A}$$

where

C	=	a conversion factor 3596 GJ/kw
I_h	=	average incident direct normal insolation in hour h(kw/m^2),
A	=	Collector area (80.3m^2)

The minimum design insolation level for the PKI collector is 600 watts/m^2. It was found however, that the system could convert sunlight to heat at insolation levels as low as 450 watts/m^2, albeit at low efficiency levels. Nonetheless, to be consistent with standard SERI format, daily average efficiencies are expressed as the total energy delivered per day divided by the total energy incident, notwithstanding the number of hours when $I \geq 600$ watts/m^2. In other words daily efficiencies include the impact of zero production even for those hours when production was not anticipated.

IV. Experiment Results

A. System Failure Analysis

This aspect of plant evaluation is to be responsive to two objectives as discussed in Section III, above:

1) Understand the failure modes of the PKI collector system.
2) Provide feedback to the system-level hardware and software processes.

Figure 10 presents a summary of reported plant failures. These are discussed below.

Five failures occurred during limited operation for check-out testing. Four of these were minor cases of finding imperfections in the design or workmanship of installation. Such problems were corrected on the spot by replacing the faulty component or by modifying installation as required. The fifth failure involved the failure of a gasket on the feed water flow meter of the data acquisition system. Because this sensor is inserted in the working fluid loop of the plant, its failure prohibits operation of the system. At first it was thought and reported that the failure was due to inadequate torque being applied to the case bolts of the flow meter, but a subsequent failure in January indicates that the problem may have been more fundamental.

Four failures of data acquisition system components were reported subsequent to check out testing. Two of these involved loose electrical connections. On one occassion programming information was not properly read by the Apple computer from the magnetic storage diskette, resulting in a failure to record data on that disk. We believe that the malfunction was a result of temperature differential between when the disk was recorded and when it was read.

The most critical problem with the DAS, and the only one which impacted on solar plant operation was the second failure, in January, of the gasket on the feedwater flow meter. This failure reduced pressure in the system, allowing steam to pass across flow meter components, ruining them. The user restored the fluid loop without a working flow meter in the loop. The same type of flow meter failed at the Capitol Concrete plant in a similar fashion with similar results. We believe that the problem of gasket failure in these cases was compounded by a lack of proper spare gaskets. In order to keep the solar energy system on line, worn gaskets had been replaced awaiting the arrival of spare parts.

The flow meter failures presented no barrier to system operation and performance other than the nuisance and expense of having to repair them. Because they were part of the DAS which would not be used in a standard plant, their failure is considered irrelevant to evaluation of the solar energy plant itself.

FIGURE 10: PLANT FAILURE SUMMARY

System	Event	Date	Type	Description
Drives:	2	18 Oct 82	W	Drag link on elevation drive is bent when azimuth tracking continues with system stowed to second hardware limit.
	4	5 Nov 82	D	Drive sprocket slipped down the shaft causing motor to spin without turning the collector.
	10	2 Dec 82	E/D	Ice froze azimuth drive chain to collector.
	12	29 Dec 82	E/D	Ice froze on exposed bushings of elevation drives causing fuse to burn out.
	14	10 Jan 83	D/Y	Hose clamp holding drive unit to drive actuator slips, defocussing half the collector and melting 40 square inches of aluminum sheathing on steam line. Original refocus had to be readjusted after flux trap overtemperature stows.
	18	31 Jan 83	E	One mirror assembly came loose. Assumed wind damage over weekend.
Controls:	8	22 Nov 82	U	System fails to track from memory if there are morning clouds.
	19	7 Feb 83	U	System fails to track from memory.
Fluid Loop:	1	18 Oct 82	M	Drain down valve failure in open position.
	9	23 Nov 82	M	Feedwater line froze due to a faulty thermostatic valve.
	13	1-4 Jan 83	U	Frozen feedwater line.
	16	20 Jan 83	U/M?	Pump remounted to reduce vibration and noise.
	17	20 Jan 83	U	Feedwater pipe rupture. Unknown cause.

Figure 10: PLANT FAILURE SUMMARY (CONTINUED)

System	Event	Date	Type	Description
System Interactions:	5	7 Nov 82	N/A	Azimuth drive tracking error reported consequent to azimuth drive failure of November 5 (see Event 4 under Drives).
DAS:	3	21 Oct 82	W	Gasket blown on feedwater flow meter due to inadequate torque on case bolts.
	6	12 Nov 8	W	Connections to receiver thermocouple loose.
	7	15 Nov 82	W	Connection to data logger loose.
	11	17 Dec 82	E	Data not recorded on disk. Thought to be due to low temperature.
	25	14 Jan 83	M	Leaking gasket on feedwater meter. Destroys the meter.

Failure Type:
- W = workmanship
- D = design
- E = environmental
- U = unknown
- M = materials
- Y = maintenance

A total of ten plant failures which related directly to the solar plant were reported during the course of the experiment. These are discussed here according to the subsystem involved:

1. Drives

Four problems were reported which related directly to the elevation or azimuth drive subsystems. Three of these were weather related; the fourth involves a design choice with its maintenance implications.

Twice the PKI collector failed due to icing of the drive systems. On December 2, ice formed around the azimuth hardware limit switch, the azimuth chain and the azimuth drive unit. The problem was detected the following morning when it was noticed that the collector had not returned to its eastern position to acquire the sun. The user physically removed the built up ice, and restored the system to operation with no apparent damage.

Over the New Year's holiday, ice formed around the exposed bushings on the elevation drives, causing the motor to overwork, and the elevation drive motor's fuse to burn out. The fuse was replaced on January 3, and the system returned to service without noticeable damage.

The third environmental failure was assumed to be due to wind damage over the weekend ending January 31. One mirror assembly was found to be loose with one mirror panel broken. The problem was fixed and the system restored with two hours of maintenance time expended.

It is noteworthy here that a major plant failure occurred after the end of the evaluation period, also due to wind damage. Over Easter weekend (April 3&4, 1983) winds gusting as high as 104 mph, with sustained gusts of 80 mph and steady winds of over 60 mph were reported at Hill AFB. The same wind storm blew a twelve car railroad train off its tracks and toppled several steel towers on base. The nominal design rating for the PKI collector was the capability to withstand winds of 90 mph.

Damage to the collector was extensive, with several mirror assemblies detached from the collector and many mirrors broken. The azimuth drive chain was snapped, and minor structural damage was reported. PKI has estimated the cost to repair the system to be about 15% of system replacement cost.

The final drive system failure relates to a system design choice and the consequent maintenance implication which was not fully appreciated before the failure occurred. Hose clamps were used at the Ogden ALC plant to hold the elevation drive links to the drive actuator. It had been considered to use a mechanical fastener, but this would have permanently fixed the preliminary focus of the bank of mirror assemblies as originally established by the installation team. By using a hose clamp, subsequent adjustment was possible.

On January 10, 1983, the hose clamp on the west side of the collector slipped during operation, defocussing half of the collector and consequently melting 40 square inches of aluminum sheathing over the steam line. No permanent or operational damage occurred. The clamp was reset, the steam line inspected, and operation was resumed. A subsequent flux trap overtemperature stow indicated that the refocus was insufficiently accurate, and the refocussing procedure was repeated with satisfactory results. We recommend that if a hose clamp is to be used, as is reasonable, that a routine maintenance task be added to inspect and tighten the clamp on a regular (weekly) basis.

2. Controls

One control related problem was reported. On several occassions as reported in both November and February, the collector failed to track from memory in azimuth. This meant that on low insolation days, no azimuth tracking occurred until direct sunlight was detected by the azimuth shadowband sensor. Accordingly, system operation time was lost while the azimuth drive turned to catch up to the sun once it appeared. According to PKI, the precise problem has not been isolated. It appears to be a software "glitch."

This problem does not have any major impact on system safety. It does have minor implications for performance in that a certain opportunity for energy conversion will be lost as the collector drives to catch up with the sun. Once the tracking is initiated, whether by user intervention or by the incidence of sunlight on the azimuth shadowband, it continues for the rest of the day. The software problem should be isolated and corrected by PKI in order for proper operation of the equipment to be achieved.

3. Fluid Loop

Fluid loop problems were limited to mechanical failures of valves or piping in the feedwater line, except for a failure in the feedwater pump. There were no problems with the boiler or steam lines.

As at Capitol Concrete, failure of the drain down system was problematic. The most important plant failure during the experiment occurred when a thermostatic valve failed during the night of November 22, and the fluid loop was frozen. The system was finally thawed on November 29, and it was thought that the plant was operable. However, the weather was such that no sunlight was available to test the system. Finally, on December 6, the fluid loop was externally pressurized to 50 psi on the steam guage and leaks were found in the feed line. Low temperatures, poor weather, and a difficulty in requisitioning spare parts delayed repair of all leaks until December 16.

It was originally thought that the drain down system had failed due to a faulty solenoid valve. The valve was replaced, but the drain down system still failed to function properly. Finally, on December 22, it was determined that the thermostatic valve upstream of the solenoid was the source of the failure. The valve was replaced, and the system was returned to service.

Again on January 3, after the New Year's weekend, the water line between the center pier and the pump house was found to be frozen. The line was thawed on January 5 and replaced on January 6. The cause of the failure is unknown. No consequent damage resulted.

On January 20, 1983 the user relocated and remounted the feedwater pump to reduce vibration and noise. The pump later failed after the end of the evaluation period. The cause of the failure is unreported. It may be assumed to be either a materials or maintenance problem. On January 20, the feedwater pipe ruptured from an unknown cause. It might be speculated that the failure was associated with either the vibration or repair of the feedwater pump. At any rate, the pipe section was replaced and the plant restored to service.

B. Operability Testing

1) General Operability.

The major concern of the user was that of subcomponent level reliability and the relative difficulty of procuring replacement parts within the strictures of standard procedures for procurement within the military. As was the case at Capitol Concrete, the user was plagued by a series of relatively minor and inexpensive component failures. Virtually all of these were standard, available hardware, not specifically related to plant characteristics which were special or unique to solar energy systems. When these nuisance type problems occurred at Capitol Concrete, they were typically solved by a quick trip to an electronics or plumbing supply store. Spending government dollars is not so easy, and the plant was typically disabled for an inordinately long time for a relatively minor problem. Quite apart from the cost to repair, then, the multiplicity of parts which might fail and which are not standard items of BCE parts stockage are a potential disincentive to military utilization of this type of system.

The problem is resolvable through several approaches, including increasing subcomponent reliability, which will come as experience is gained by operating systems in the field, and through simplification of system design, which is an ongoing process with the PKI collector. If military applications for the technology become widespread, so will the availability and stockage of spares. Nonetheless, this is a potential barrier which should be considered by technology developers interested in the military market.

As at Capitol Concrete, the user ranked the operability of the system as quite favorable. Typically, a technician, who was assigned to the area of base where the collector was located, checked in once a day to monitor the system. All required maintenance during the period was performed by the BCE staff with only telephonic consultations with the project or manufacturing engineers.

The user reported that no negative environmental impacts were observed. There had been some concern voiced early in the project that

glare from the collector would prove distractive to pilots operating aircraft on a runway which was close to the collector. Absolutely no complaints or comments were received, although aircraft were making landings and takeoffs in the near vicinity of the collector on a continuous basis.

The user reported a great deal of curiosity and interest in the plant by the staff and visitors to the facilities. Numerous tours were given of the plant at the request of a variety of groups and individuals.

In summary, the only concern which developed regarding plant operability was that of reliability of common components and the difficulty of dealing within a military context with systems whose ultimate reliability is yet to be established.

2) Plant Operating Time, Reliability, Availability and Maintainability.

Figure 11 presents a synopsis of system operation during the period of evaluation. It had originally been hoped that funds would be found to continue the test period beyond the three months originally supported. Most especially, the project team hoped to secure analytical data for the three months around the summer solstice. In typical years, the expected ratio of summer to winter direct normal insolation for the Hill AFB area is 2.5 to 1. This means that only 15 per cent of the total direct normal insolation occurs during the months of November, December, January, as opposed to 37 per cent in June, July and August.

Available sunlight during the test period was strikingly less than the already low expected value. Extrapolating data for those days when normal incident radiation measurements were not available, the total solar energy incident on the collector during the test period was approximately 45 gigajoules, compared to an expected value of 115 gigajoules. In other words, only 39 per cent of the normally expected direct normal insolation for the test period was measured. This number can also be expressed as 7 per cent of the expected average annual insolation.

As a consequence of the weather, the opportunity for solar energy conversion was inordinately low. As shown in Figure 11, on only thirty days of the experiment was there even one hour when the direct normal insolation level exceeded the 600 watts per square meter level which was the collector design minimum. This was the criterion applied for fair/partly cloudy weather as per the chart. On many of those days, only one or a few hours touched or barely exceeded the minimum level. As can be seen from the detailed charts in Figure 12, nearly all collector operation occurred over five days in November and ten in January.

It would appear from Figure 11 that plant availability was low compared to the target of 25 per cent outage. The availability factor of only 55 per cent is misleading, however, in that a full thirty days of outage are attributable to one plant failure, i.e. the failure of a thermostatic valve in the drain down system on November 22-23. The long time to repair was due in part to the weather - The system could not be thawed until Novenber 29, due to the cold. It could not be checked out for

Figure 11: System Operation Summary

	Month					
	November	December	January	February	Total	%
Days of:						
Experiment	24	31	31	7	93	100%
Facility Operation	16	18	21	5	60	65%
Days During which Insolation exceeded 600 watts/m^2	9	4	13	4	30	32%
Solar Plant Availability	9	12	23	7	51	55%
Solar Plant Operation	5	1	11	1	18	19%
Hours of:						
Solar Plant Operation	26	1	51	1	79	-

Figure 12A: Ogden ALC - System Operation Summary Table - November 1982

Date	Julian Date	Status Code	Weather	Hours up.	Remarks
11/8	312	1	C*		Stowed.
11/9	313	1	P*		Stowed.
11/10	314	1	C*		Stowed.
11/11	315	4	C*		Stowed.
11/12	316	1	F	6	Data to 1500.
11/13	317	5	C*		No data. Fluid loop gasket failure.
11/14	318	5	F		No data. Gasket out.
11/15	319	1	F	4	NIP out. Gasket repaired.
11/16	320	1	F	6	DAS failure 1200-1400.
11/17	321	1	F	5	Good data.
11/18	322	1	C*		Stowed.
11/19	323	1	C*		Stowed and wind stowed.
11/20	324	6	F		Stowed due to lack of operator
11/21	325	6	C*		reset.
11/22	326	1	P	5	NIP out. Good data. Drain down failure.
11/23	327	2	F		NIP out.
11/24	328	2	F		Frozen.
11/25	329	5	F		Frozen.
11/26	330	2	F		Frozen.
11/27	331	5	F		Frozen.
11/28	332	5	C*		Frozen.
11/29	333	2**	C*		Wind stowed.
11/30	334	2**	C*		Ice interferes w/azimuth drive.
11/31	335	2**	C*		Ice interference.

Summary: Total days: 24

Days NI exceeds 600 w/m^2	13	Days NI$\neq$600 w/m^2	11
Days Available	9	Days Not Available	15
Days Operated	5	Days Not Operated	19

* Days where no hour had insolation $\geq$ 600 watts/m^2

** It was thought at the time that system was available, but ruptures in fluid loop due to freezing were detected 12/6.

Figure 12B: Ogden ALC - System Operation Summary Table - December 1982

Date	Julian Date	Status Code	Weather	Hours Op.	Remarks
12/1	336	2**	C*		Snow, ice. Stowed.
12/2	337	2**	C*		Ice jams azimuth drive chain.
12/3	338	2**	C*		Stowed.
12/4	339	5**	C*		Stowed.
12/5	340	5**	C*		Stowed.
12/6	341	2	C*		Broken feedline detected.
12/7	342	2	C*		Broken feedline.
12/8	343	2	F		Broken feedline.
12/9	344	2	P*		Broken feedline.
12/10	345	2	F		Broken feedline.
12/11	346	5	C*		Broken feedline.
12/12	347	5	C*		Broken feedline.
12/13	348	2	C*		Broken feedline.
12/14	349	2	C*		Broken feedline.
12/15	350	2	C*		Under Repair.
12/16	351	2	C*		Under Repair.
12/17	352	1	P*	1	Run 1 hr.
12/18	353	5	F		Shut down for weekend.
12/19	354	5	F		Shut down for weekend.
12/20	355	2	C*		Shut down for weekend.
12/21	356	1	C*		Feedline repaired.
12/22	357	1	C*		
12/23	358	1	C*		
12/24	359	1	C*		
12/25	360	6	P*		Plant idled Christmas week.
12/26	361	6	C*		Plant idled Christmas week.
12/27	362	6	C*		Plant idled Christmas week.
12/28	363	6	C*		Plant idled Christmas week.
12/29	364	6	-		Plant idled Christmas week.
12/30	365	6	-		Plant idled Christmas week.
12/31	366	6	-		Plant idled Christmas week.

Summary:				
	Total days: 31			
	Days NI exceeds 600 w/m^2	4	Days NI$\neq$600 w/m^2	27(?)
	Days Available	12	Days Not Available	19
	Days Operated	1	Days Not Operated	30

* Days where no hour had insolation $\geq$ 600 watts/m^2

** It was thought at the time that system was available, but ruptures in fluid loop due to freezing were detected 12/6.

APPLIED CONCEPTS CORPORATION

Figure 12C: Ogden ALC - System Operation Summary Table - January 1983

Date	Julian Date	Status Code	Weather	Hours Op.	Remarks
1/1	1	6			
1/2	2	6			
1/3	3	2	C*		Frozen feedwater line
1/4	4	2	C*		discovered.
1/5	5	1	P	5	
1/6	6	1	P*		
1/7	7	1	C*		
1/8	8	4	P	3	High winds: windstow.
1/9	9	4	P	5	NIP out.
1/10	10	1	F	5	West banks slip focus.
1/11	11	1	F	8	
1/12	12	1	F	8	Fluxtrap stow. Refocussed.
1/13	13	1	F	6	
1/14	14	1	F	5	DAS feedwater guage
1/15	15	5	F		developes leak in
1/16	16	5	P		feedwater line.
1/17	17	2	C*		
1/18	18	2	C*		
1/19	19	1	C*		Gasket repaired, but
1/20	20	1	P*		DAS disabled.
1/21	21	1	P?		No DAS DATA.
1/22	22	4	C*(?)		No DAS DATA.
1/23	23	4	C*(?)		No DAS DATA.
1/24	24	1	C*		
1/25	25	1	C*		
1/26	26	1	P*	2	Low sun operation.Feedline
1/27	27	1	C*		broke/repaired.
1/28	28	1	P*		
1/29	29	4	C*		
1/30	30	4	C*	0.5	Low sun operation.
1/31	31	1	P*	4	Low sun operation.

Summary:				
Total days:	31			
Days NI exceeds 600 w/m^2		9	Days NI$\nless$600 w/m^2	22
Days Available		23	Days Not Available	8
Days Operated		11	Days Not Operated	20

* Days where no hour had insolation $\geq$ 600 watts/m^2

Figure 12D: Ogden ALC - System Operation Summary Table - February 1983

Date	Julian Date	Status Code	Weather	Hours Op.	Remarks
2/1	32	1	P	0.5	DAS goes out.
2/2	33	1	P(?)	?	
2/3	34	1	F?	?	
2/4	35	1	P*		DAS restored.
2/5	36	4	C		1 hour good sun.
2/6	37	4	C*		Azimuth tracking
2/7	38	1**	P*		problem.

Summary:				
	Total days: 7			
	Days NI exceeds 600 w/m^2	4(?)	Days NI=600 w/m^2	3
	Days Available	7	Days Not Available	0
	Days Operated	1	Days Not Operated	6

* Days when NI never reaches 600 $watts/m^2$.
** System operated after manual reset of azimuth tracking.

Status Codes:

	Solar Plant	Industrial Plant
1	up	up
2	down	up
3	idle	up
4	up	down
5	down	down
6	idle	down

Weather Codes:

F	Fair
P	Partly cloudy
C	Cloudy or fog

adequacy of repair until December 8 due to lack of sunlight. Then when it was found that further damage had been done which also required repair, poor weather and the procedures required to secure parts delayed restoration to service until December 22.

Exclusive of the failure due to the thermostatic valve, system availability was 87 per cent. Nearly one third of experiment time was lost to this single outage. On the other hand, during the outage period, only nine days showed insolation of greater than 600 watts per square meter.

A quantitative evaluation of the JPL operability parameters reveals the following:

a. Plant operating time: Total operating time was 79 hours during the test period in which 7 per cent normal annual insolation was available. If extrapolated to an annual basis for the expected average insolation, this corresponds to 1,128 hours of expected annual operation. JPL had established a target of 1,000 hours per year.

b. Planned outage rate: The planned outage rate target established by JPL was 0.85. This figure represents an annual rate, and is not directly applicable to a period of less than 12 months. If we apply the fraction of expected insolation during the winter to the value however, we can derive a term for planned outage for the winter months, namely 0.91. This assumes that the total energy of direct insolation corresponds to the number of hours of direct insolation greater than 600 watts per square meter, which is probably approximately true.

The achieved value for outage rate was 0.96. The ratio of achieved hours of operation to expected hours of operation was 79 hrs/197 hrs = 40 per cent. This is similar to the value for direct insolation extrapolated from measurements compared to the value for expected insolation 45 GJ/ 115 GJ = 39 per cent. In other words, the predominate factor in forced outage compared to actual outage was the weather.

c. Forced Outage Rate: The forced outage rate experienced during the evaluation period was 45 per cent as opposed to an annual target rate of 25 per cent. As discussed in section IV.B.1. above, the major factors in this low rating were weather and the time to procure parts. It is impossible to state a conclusion with certainty, but we believe that a winter-time outage rate of 45 per cent is consistent with an annual rate of 25 per cent. We also believe that the winter-time rate can be greatly reduced through incorporation of certain design modifications as discussed in Chapter V, below.

d. Plant availability. Plant availability is merely the inverse of forced outage rate. The target was therefore 75 per cent. The achieved rate was 55 per cent. The same considerations apply as for forced outage.

e. Mean Time to Repair: No target was set for mean time to repair, except that experience was to be consistent with industrial operation. A total of ten plant failures and one interactive DAS failure put the plant out of commission for a total of forty two days, an average of four days to

repair (counting weekends and holidays). If the single thermostatic valve failure of November 22 is ignored, mean time to repair was one day.

The exaggerated impact of a single plant failure indicates that insufficient data was gathered during the test period to clearly characterize the mean time to repair. As indicated by the user, the procedure to procure minor replacement parts extended the time to repair. While this factor may be applicable to military users, it presumably distorts the parameter from the perspective of other potential users.

We do believe, as a subjective evaluation, that the product of mean time to repair and number of repairs is too great for routine industrial operations, and that the reliability of the first generation industrial test plants needs to be improved before general commercial acceptance of this technology is feasible. It should be remembered that a major purpose of these installations was to generate experience which would support such product improvement.

C. Performance Testing

1) General Considerations.

The weather and seasonal impacts on insolation during the evaluation period were so severe that insufficient data was gathered to permit a useful performance analysis. What are available must be considered only data points.

The data acquisition system problems which were experienced at Capitol Concrete were solved, and excellent data was derived for most of the test period. The principal problem with the DAS was one which has plagued most solar industrial process heat experiements, the loss of data from the normal incident pyrheliometer due to tangling of the power cord with rotation of the tracking device. There are six days (6 per cent of the total) for which horizontal insolation was recorded but no NIP data exists. On three of these days (17 per cent of all operating days), the solar plant was operating, so no efficiency data can be calculated for those days, based upon direct normal insolation. In addition, there were periods when the solar plant was idled during which the DAS was not maintained in a full operational condition. The data lost for these periods was not necessary to the evaluation of the plant. Because of the ephemeral nature of data stored on magnetic diskettes and the occurrance of at least one programming omission regarding the disk operating system (DOS), the research team was glad to have provided for a printed copy of data, and therefore recommends this back up method.

The impact of total direct normal insolation, or rather its lack, upon the solar plant and the evaluation of its performance has been discussed above. Another important factor for focussing solar energy systems is the "quality" of insolation. As demonstrated during this project, the PKI collector can produce steam at low insolation levels, i.e. >750 watts/square meter, but conversion efficiencies at low insolation levels are a small percentage of a small number.

Equally ruinous to conversion efficiencies is a day with high transients, i.e. a mixture of clear sky and cloud. The impact on average efficiency of such transients is much greater than the impact on average insolation. For example, an operating hour when sunlight is available for forty minutes at 800 watts per square meter, and is obscured by thin clouds for two ten minute periods when insolation is 200 watts per square meter, will show an average hourly insolation of 600 watts per square meter. The data available clearly demonstrates that conversion efficiency will be much lower for such a hypothetical case, perhaps approaching zero, than for an hour with a steady 600 watts/ square meter insolation. Examination of the ten minute data available from the printouts indicates that many hours during the test period were high transient hours.

It is possible therefore to construct a model of a minimal "good operating day" for the PKI collector. (The model is probably valid for any focussing system). Such a day would consist of not less than five hours (e.g. 1000 - 1500) when direct normal insolation is 600 watts per square meter or higher. This is the equivalent of 0.87 gigajoules of incident sunlight upon the PKI collector. Normally one would expect that additional sunlight would be available during the early morning and late afternoon period, bringing the total to 1 gJ during the day. On a good summer day, total direct normal insolation might approach 3.5 gJ, and an average day in July at Hill AFB will provide 2.8 gJ. In other words, a minimally "good" operating day will provide about one third the available energy for conversion as the best operating days.

During the test period of 93 days, there were eight days during which the measured total, direct normal insolation exceeded 1 gJ. Figure 13 provides a summary of performance data for those eight days. For three of those days, there was no solar plant operation. Two of them occurred during the period when the plant was down due to the thermostatic valve failure in the drain down subsystem. The third was a Saturday after the collector had stowed to a hardware limit on Friday. In such cases, for safety reasons, user intervention is required to restore the plant to operation, (the controller cannot tell with certainty if the stow was due to routine or precautionary factors, as in this case, or to a potentially dangerous failure). The plant was not inspected during the weekend, and so remained stowed until Monday morning, thus missing 12.5% of the minimally good operating days.

Of the five "good" days during which the plant operated, one was in November and four in January. As detailed in section IV.A. above, on 10 January, a hose clamp slipped, causing half of the collector to slip out of focus. The system was refocussed the same day, but because the system kept stowing due to flux trap overtemperature conditions, it was detected by the user that the refocus was not precise; i.e. solar energy was being directed on the flux trap which should have been directed to the boiler face. The system was refocussed on the 12th, and efficiency was increased by 38 per cent as measured on the 13th, a very similar insolation day.

Figure 13: Performance on Minimally "Good" Insolation Days

Julian Day	Date	Incident Solar Energy Horizontal (1)(GJ)	Incident Solar Energy NI (2)(GJ)	Energy Delivered(GJ)	System Thermal Efficiency (1)	System Thermal Efficiency (2)	Remarks
316	11/12	0.80	1.42	0.44	.54	.30	6 hours operation.
324	11/20	0.68	1.26	0.00	-	-	Accidentally stowed.
330	11/26	0.80	1.40	0.00	-	-	Stowed. Feedwater line frozen.
342	12/8	0.75	1.19	0.00	-	-	Stowed. Feedwater line frozen.
011	1/11	0.81	1.62	0.35	.43	.22	8 hrs op. Focal failure on 1/10.
012	1/12	0.98	1.49	0.31	.32	.21	8 hrs operation.
013	1/13	-	1.48	0.43	-	.29	Refocussed after flux trap stow. No PYR data.
014	1/14	-	1.32	0.10(?)	-	.14	7 hrs op. No PYR data. Bad energy data due to work on fluid loop.

In a continuation of this string of misfortune, the feedwater flow meter gasket failed on the 14th of January, which was the last day during the test period when direct normal insolation exceeded 1 gJ. Because energy output is calculated from makeup water input, and because work was proceeding on th fluid loop during the day, we question seriously the value recorded by the DAS for makeup water and thus for energy output on that date.

Thus it can be seen that insufficient data exists to make general statements regarding the performance of the PKI collector. The following section provides detailed data as collected during the test period, and offers such observations as are possible based upon the limited data available. As detailed in Chapter V, below, the project team strongly recommends repair of the damage caused by wind in March 1983, and an extended evaluation period, especially during May - August 1983.

2) A Consideration of Results and Comparison with JPL Criteria

Plant performance is a function of time, especially for a solar energy plant whose "fuel" supply is a function of instantaneous and seasonal availability of sunlight. The basic unit for aggregation of results of this evaluation at all levels was the ten minute data now resident on magnetic diskette and computer print out paper. The SERI standard for reporting is daily performance, based upon a summation of hourly performance data. It is also reasonable to talk about seasonal performance. The evaluation period for this project can be taken to be one winter's period of performance.

Figure 14 presents daily performance tables in standard SERI format. As can be seen, the PKI collector delivered an estimated 3.01 gJ of energy, or 3.2 MBTUs over the evaluation period. Half the total amount was delivered during a single week in January. During part of that week, the collector is known to have been poorly focussed, and operating at a fraction of capacity. In other words, there is little to be gained from an attempt to extrapolate from the daily data.

Figure 15 presents hourly data for three "good" winter days' performance, and Figure 16 recapitulates the table in graphic form. November 12 and January 13 are two of the five "good" days for which data exists. November 17 was chosen as an example of a "substandard" day for which good data exists, and for which the plant achieved credible performance.

Figure 14A: Hill Air Force Base - Monthly Performance - November 1982

Julian Day	Date	Incident Solar Energy Horizontal (1)(GJ)	NI (2)(GJ)	Energy Delivered(GJ)	System Thermal Efficiency (1)	(2)	Remarks
312	11/8	.23	0.00	0.00	-	-	Cloudy. Azimuth not tracking. Stowed. System failure.
313	11/9	.31	0.35	0.00	-	-	P. Cloudy. Leaking trap.
314	11/10	.23	0.00	0.00	-	-	Cloudy, Leaking trap. Manual stow.
315	11/11	.47	0.06	0.00	-	-	Cloudy, Leaking trap. Manual stow.
316	11/12	.80 (to 1400)	1.42	0.44	.54	.31	6 hrs op. Thermocouple on receiver loosened. Control failure.
317	11/13	-	-	0.00	-	0	Cloudy, Gasket blown.
318	11/14	-	-	0.00	-	-	Clear, Gasket blown.
319	11/15	.32	-	0.26	.78	-	Partial data. 4 hrs. op. No NIP. Data acquisition failure.
320	11/16	.47	0.99	(0.28 Est)	-	-	No data. Est. 6 hrs. op.
321	11/17	.69	0.85	0.23	.33	.27	P. Cloudy, Partial data. 5 hrs. op.
322	11/18	.47	0.28	0.00	-	-	P. Cloudy.
323	11/19	.17	0.01	0.00	-	-	Cloudy, Wind. Stowed.
324	11/20	.68	1.26	0.00	-	-	Accidentally stowed.
325	11/21	.68	0.32	0.00	-	-	P. Cloudy. Accidentally stowed. No. op.
326	11/22	.70	-	0.24	.34	-	P. Cloudy. NIP out. No drain down. Frozen system. 5 hrs. op?
327	11/23	.76	-	0.00	-	-	Clear. Stowed. Feedwater line frozen.
328	11/24	.66	0.75	0.00	-	-	Clear. Stowed. Feedwater line frozen.
329	11/25	.64	0.81	0.00	-	-	Clear. Stowed. Feedwater line frozen.
330	11/26	.80	1.40	0.00	-	-	Clear. Stowed. Feedwater line frozen.
331	11/27	.71	0.92	0.00	-	-	Clear. Stowed. Feedwater line frozen.
332	11/28	.10	0.00	0.00	-	-	Cloudy. Stowed. Feedwater line frozen.
333	11/29	.14	0.00	0.00	-	-	Cloudy. Manual stowed.
334	11/30	.09	0.01	0.00	-	-	Cloudy. Manual stowed.
			Total	1.17 (Known) 1.45 (Est)			

ORIGINAL PAGE IS OF POOR QUALITY

Figure 14B: Hill Air Force Base - Monthly Performance - December 1982

Julian Day	Date	Incident Solar Energy Horizontal (1)(GJ)	Incident Solar Energy NI (2)(GJ)	Energy Delivered(GJ)	System Thermal Efficiency (1)	System Thermal Efficiency (2)	Remarks
335	12/1	0.15	0.00	0	-	-	Cloudy. Stowed. Snow and ice.
336	12/2	0.25	0.00	0	-	-	Cloudy. Stowed. Ice froze drive chain to collector.
337	12/3	0.43	0.01	0	-	-	Stowed.
338	12/4	0.48	0.01	0	-	-	P. Cloudy. Stowed.
339	12/5	0.60	0.01	0	-	-	Cloudy. Stowed.
340	12/6	0.39	0.10	0	-	-	Cloudy. Stowed. Broken feedline.
341	12/7	0.77	0.00	0	-	-	Cloudy. Stowed. Broken feedline.
342	12/8	0.75	1.19	0	-	-	Clear. Stowed. Broken feedline.
343	12/9	0.52	0.39	0	-	-	P. Cloudy. Stowed. Broken feedline.
344	12/10	0.46 (to 1300)	0.70	0	-	-	Clear. Stowed. Broken feedline.
345	12/11	-	-	0	-	-	Foggy. Stowed. Broked feedline.
346	12/12	-	-	0	-	-	Foggy. Stowed. Broken feedline.
347	12/13	0.15	0.00	0	-	-	Cloudy. Stowed. Broken feedline.
348	12/14	0.44	0.01	0	-	-	Cloudy. Stowed. Broken feedline.
349	12/15	0.30	0.00	0	-	-	Cloudy. Stowed.
350	12/16	0.38	0.03	0	-	-	Cloudy. Stowed.
351	12/17	0.20 (to 1400)	0.13	.02	10%	15%	P. Cloudy. 1 hr. op.
352	12/18	-	-	0	-	-	Clear. Stowed.
353	12/19		-	0	-	-	Clear. Stowed.
354	12/20	-	0.00	0	-	-	Cloudy. Stowed.
355	12/21	-	0.00	0	-	-	Cloudy. (Probably Stowed?)
356	12/22	-	0.00	0	-	-	Cloudy. (Probably Stowed?)
357	12/23	-	0.00	0	-	-	Cloudy. Wind Stowed.
358	12/24	-	0.15	0	-	-	Cloudy. Probably Stowed.
359	12/25	-	0.82	0	-	-	No op.
360	12/26	-	0.00	0	-	-	No op.
361	12/27	-	0.00	0	-	-	No op.
362	12/28	-	0.00	0	-	-	No op.
363	12/29	-	-	0	-	-	No data. Fuse to elevation drive burned out.
364	12/30	-	-	0	-	-	No data.
365	12/31	-	-	0	-	-	No data.
			Total	0.02			

ORIGINAL PAGE IS OF POOR QUALITY

..e Ba... ...y Performance - January 1983

Julian Day	Date	Incident Solar Energy Horizontal (1)(GJ)	Incident Solar Energy NI (2)(GJ)	Energy Delivered(GJ)	System Thermal Efficiency (1)	System Thermal Efficiency (2)	Remarks
001	1/1	-	-	0	-	-	Clear. Frozen feedline.
002	1/2	-	-	0	-	-	P. Cloudy. Frozen feedline.
003	1/3	-	.02	0	-	-	Cloudy. Frozen feedline.
004	1/4	-	.00	0	-	-	Cloudy. Frozen feedline.
005		>.61	>.46	-	?	?	P. Cloudy. 5 hrs. op. Printer error.
006	1/6	.42	.28	0	-	-	P. Cloudy. Printer error.
007	1/7	.07 (to 1200)	.00	0	-	-	Cloudy.
008	1/8	.64	.99	.03	5%	3%	P. Cloudy. 3 hrs. op. High winds and transients.
009	1/9	.75	-	.09	12%	-	P. Cloudy. 6 hrs. op.
010	1/10	.68	.94	.18	26%	19%	Clear. 7 hrs. op. (2 hrs. out of focus?)
011	1/11	.81	1.62	.35	43%	22%	Clear. 8 hrs. op.
012	1/12	.98	1.49	.31	32%	21%	Clear. 6 hrs. op.
013	1/13	-	1.46	.43	-	29%	Clear. 6 hrs. op. Fluxtrap stow.
014	1/14	-	1.32	.10	-	14%	7 hrs. op. Feedwater leak in DAS guage.
015	1/15	.81	-	0	-	-	Clear. Stowed. NIP out.
016	1/16	.71	-	0	-	-	P. Cloudy. Stowed. NIP out.
017	1/17	.17	.00	0	-	-	Cloudy. Stowed.
018	1/18	.15	.00	0	-	-	Cloudy. Stowed.
019	1/19	.16	.00	0	-	-	Cloudy. Gasket repaired.
020	1/20	>.48	>.29	0	-	-	P. Cloudy. Pump repositioned.
021	1/21	-	-	-	-	-	Cloudy. NO DAS DATA.
022	1/22	-	-	-	-	-	Cloudy. NO DAS DATA.
023	1/23	-	-	-	-	-	Cloudy. NO DAS DATA.
024	1/24	.21	.00	0	-	-	Cloudy.
025	1/25	.39	.02	0	-	-	Cloudy.
026	1/26	.38	.27	.04	11%	15%	P. Cloudy. 2 hrs. op. Broken feedline.
027	1/27	.14	.00	0	-	-	Cloudy.
028	1/28	.41	.09	0	-	-	P. Cloudy.
029	1/29	.31	.03	0	-	-	Cloudy.
030	1/30	.72	.37	0	-	-	Cloudy. Low sun op. 5 hr.
031	1/31	.60	.71	.01	27%	2%	P. Cloudy. Low sun op. 4 hr.
			Total	1.54			

ORIGINAL PAGE IS OF POOR QUALITY

Figure 14D: Hill Air Force Base - Monthly Performance - February 1983

Julian Day	Date	Incident Solar Energy Horizontal (1)(GJ)	NI (2)(GJ)	Energy Delivered(GJ)	System Thermal Efficiency (1)	(2)	Remarks
032	2/1	.44	.41	0	-	-	P. Cloudy. 1/2 hour operation.
033	2/2	-	-	-	-	-	Cloudy. No data.
034	2/3	-	-	-	-	-	Fair. No data. May have operated.
035	2/4	.41 (after 1300)	.17	0	-	-	P. Cloudy.
036	2/5	.94	.78	0	-	-	Cloudy.
037	2/6	.86	.55	0	-	-	P. Cloudy.
038	2/7	.81	.29	0	-	-	P. Cloudy.
			Total	0			

ORIGINAL PAGE IS
OF POOR QUALITY

Several things can be learned from a comparison of the three hourly data sets:

1. On each of the three days, the plant is slow to reach thermal equilibrium with output lagging somewhat behind insolation. This duplicates experience at Capitol Concrete, where energy conversion, as measured, lagged about half an hour behind conversion as took place. This is due to the DAS strategy of measuring makeup water to calculate energy delivered.

2. Maximum hourly conversion efficiency approached 50 per cent.

3. The flux trap stow on January 13, the day after the collector was refocussed for the second time subsequent to the hose clamp failure of January 10, may indicate that proper focus had not yet been achieved.

4. The loss of conversion efficiency during warm up and cool down periods, i.e. those of increasing or decreasing insolation vs. steady state insolation, will favor increased efficiency during long, summer days. A search of the ten minute data reveals that hours when efficiency drops below 40 per cent are almost certainly hours when transients disrupt thermal equilibrium.

With these observations in mind, and given the data at hand, it is possible to comment upon results from the perspectives of the JPL field test criteria:

1. Plant steam quality. Plant steam quality criteria of fully saturated steam at 100 psi were routinely met whenever sufficient insolation was available for plant operation. Operating temperatures of 167 - 169 degrees C. and pressures of 106 - 109 psi were standard.

2. Average plant thermal power. The JPL target was an average of 100,000 BTU/hr over those hours when insolation exceeded the design criterion of 600 watts per square meter. The average achieved over four "good" days for which data is available was 81,000 BTU/hr. This includes operation during two days when focus of the plant is known to have been less than optimum. It does not include those hours when plant performance was degraded by the system entering a flux trap stow.

3. Plant parasitic power. A total of 218 kwh were consumed by the plant during the evaluation period. This equates to an average of 2.3 kwh per day or about $0.10/day. This figure was approximately the same whether the plant was active on a given day or not. Because of the low energy production during the test period, parasitic power expressed as a percentage of energy delivered was 23 per cent, well above the JPL target of 2 per cent. The parasitic power if extrapolated on an annual basis, however, is approximately 2.9 MBTU/yr, or about 3 per cent of the target plant energy output.

4. Plant Energy Output. The JPL target was >100 MBTU/yr. Insufficient data was gathered to evaluate this parameter. The target

Figure 15: Representative Hourly Performance Data

November 12, 1982

Hour Ending	Energy Incident (NI) (w/m^2)	Energy Incident (NI) (GJ)	Energy Delivered (GJ)	Efficiency %
0800	0	0.00	0	-
0900	560	0.16	0	-
1000	760	0.22	.032	15
1100	840	0.24	.087	36
1200	870	0.25	.102	41
1300	820	0.24	.107	45
1400	750	0.22	.081	37
1500	310	0.09	.032	36
1600	0	0.00	0	-
1700	0	0.00	0	-
Totals		1.42	0.44	3

January 13, 1983

0800	50	0.01	0	-
0900	500	0.14	0	-
1000	760	0.22	.045	20
1100	830	0.24	.028	12*
1200	820	0.24	.097	40
1300	760	0.21	.085	40
1400	670	0.19	.092	48
1500	540	0.16	.062	39
1600	190	0.05	.017	34
1700	0	0.00	0	-
Totals		1.46	0.43	29

*Flux trap stow.

November 17, 1982

0800	0	0.00	0	-
0900	300	0.09	0	-
1000	690	0.20	0	-
1100	630	0.18	.065	36
1200	400	0.12	.036	30
1300	520	0.15	.078	52
1400	390	0.11	.049	45
1500	0	0.00	0	-
1600	0	0.00	0	-
1700	0	0.00	0	-
Totals		0.85	0.23	27

ORIGINAL PAGE IS
OF POOR QUALITY

Figure 16-A: System Performance November 12, 1982

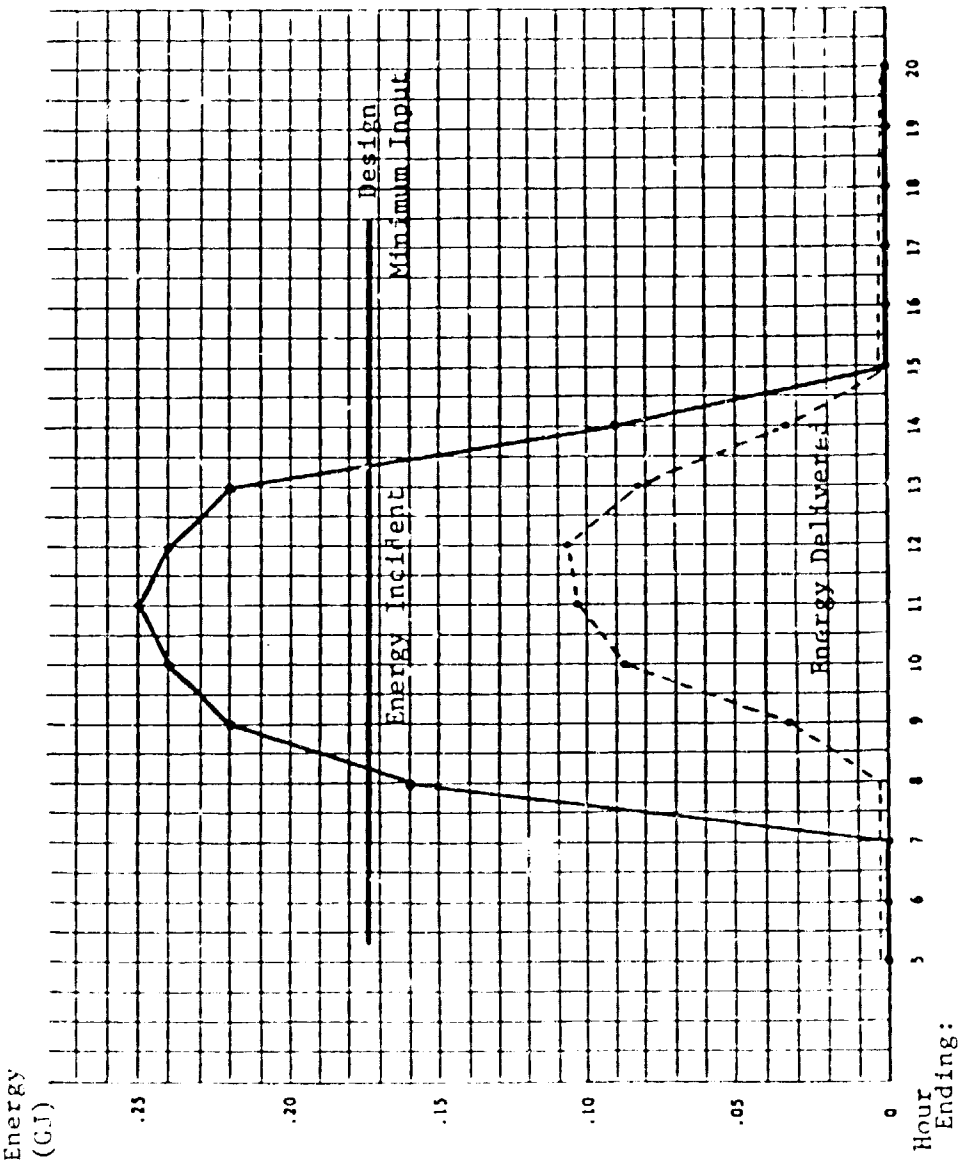

ORIGINAL PAGE IS
OF POOR QUALITY

Figure 16-B: System Performance January 13, 1983

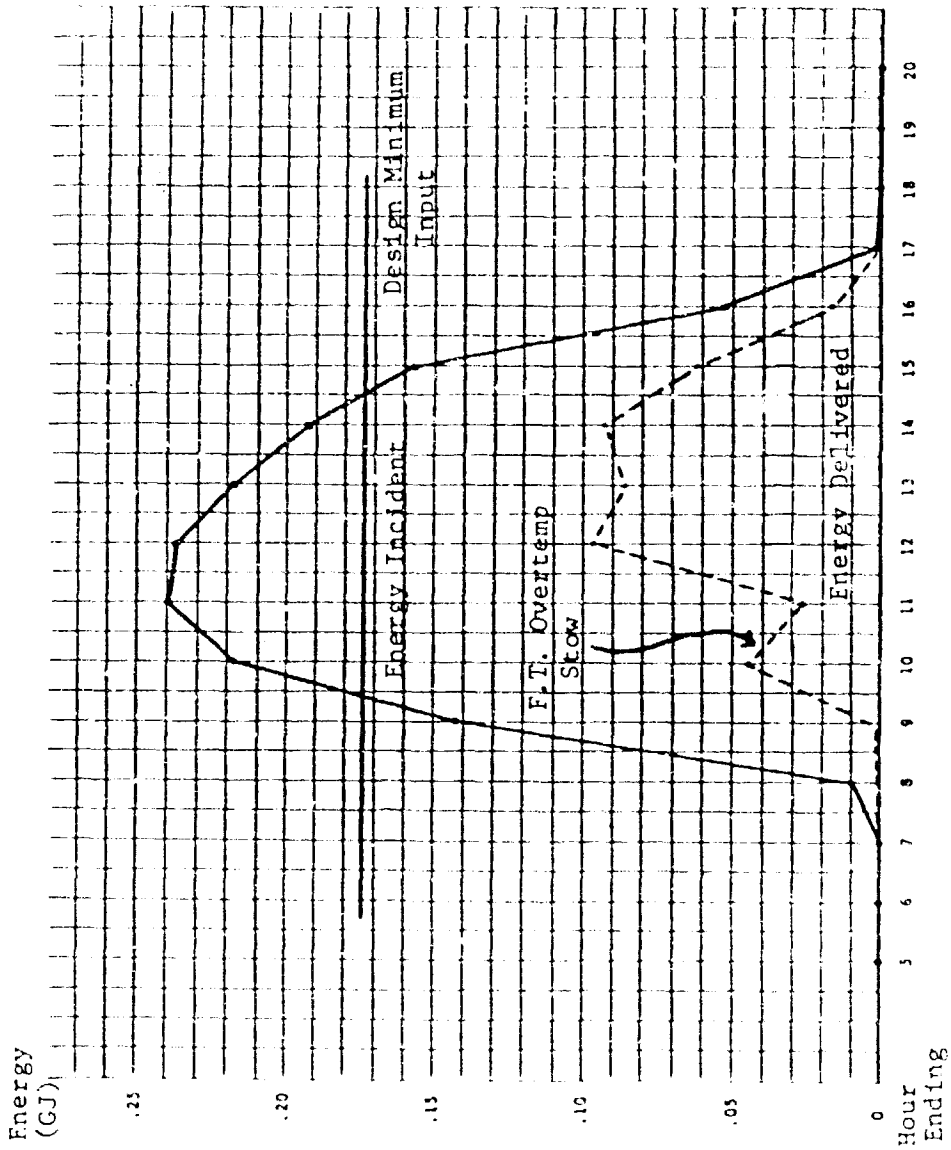

ORIGINAL PAGE IS
OF POOR QUALITY

Figure 16-C: System Performance November 17, 1982

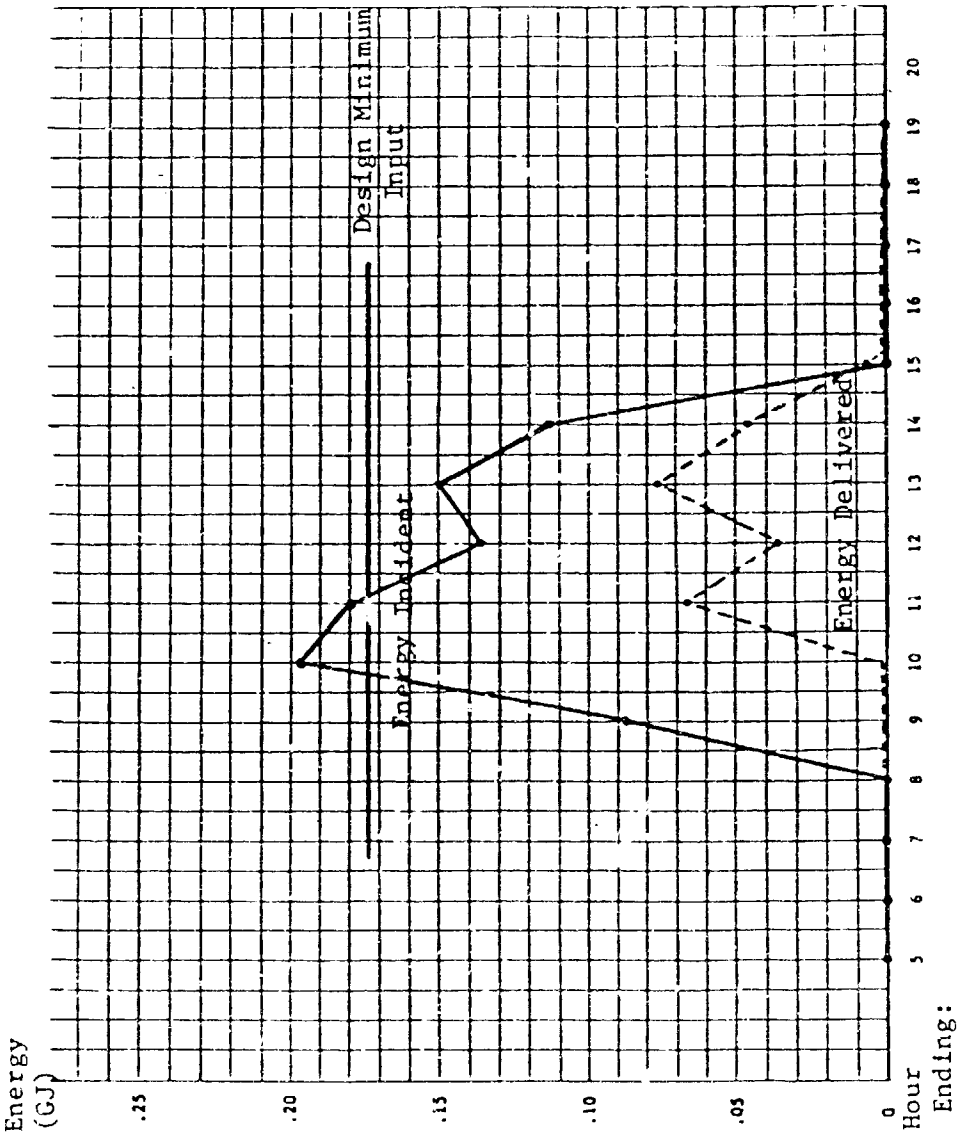

seems consistent with annual performance potential of the plant as installed, but the impact of weather and system down time make it impossible to estimate a reasonable projection based on performance during the test period.

5. Estimated peak plant energy contribution and estimated maximum hourly plant energy contribution. These variables became meaningless as originally defined, when it was decided to dump steam from the solar plant into the general distribution system of the facility. The maximum output of the PKI collector is a meaninglessly small fraction of total facility requirement.

The peak achieved energy contribution was 1.03 MBTU over January 11, 12, and 13, 1982. The maximum hourly contribution was 112,000 BTU during the hour 1400 - 1500 on Novenber 15, although 136,000 BTU were delivered between 1400-1500 on November 3, during check out testing. We expect that these figures will be easily surpassed during summertime operation.

6. Average hourly plant efficiency. The target for average efficiency of 50 per cent, as set by JPL remains to be demonstrated. The research team believes that this goal is attainable subsequent to improvements in plant design and maintenance procedures as discussed in Chapter V, below. The average conversion efficiency demonstrated during the test period was on the order of 36 per cent, depending on what hours are included. The JPL target includes all operating hours for which direct normal insolation is greater than 600 watts per square meter. The 36 per cent value is based on this criterion, but it should be noted that it includes the effects of short winter days and periods of known deficiencies in collector focus. It is safe to say that an annual average efficiency would be substantially higher, but it is unknown if it would be more or less than 50 per cent.

In summary, it is not possible to meaningfully evaluate plant performance from the limited data available from the evaluation period. The plant did demonstrate the capacity to deliver the required energy product. It also demonstrated a capacity to deliver energy at insolation values below the design minimum. The available data on plant performance is compatible with a plant potential to meet or exceed the JPL target field test criteria. Lower than desired plant output and efficiency may be assumed to be principally the result of poor weather and the lack of a full understanding of plant maintenance requirements. Both of these barriers may be overcome through continued plant operation.

V. Conclusions and Recommendations

The following conclusions and recommendations are presented based upon the experience reported on in the above chapters:

1. The limited evaluation period was insufficient to conclusively define the suitability of point focussing technologies for USAF applications.

2. Nothing which occurred during the evaluation was conclusively counterindicative. The major concern, based on experience to date, is for system reliability, especially durability to environmental effects. It may be assumed that reliability of this innovative and new technology will naturally improve with experience. There are also certain design considerations, as dicussed below, which can contribute to system reliability.

3. The plant demonstrated its general capability to deliver the desired energy product, displacing the consumption of fossil fuels. The unique seasonal and weather dependence of solar energy systems combined with unusually poor weather conditions during the course of the experiment to make it impossible to determine quantitatively the capacity of the plant.

4. System operability must be rated high. Automated operation is feasible, with the proviso that a technician should monitor the status of the plant on a daily basis, ideally in the early morning.

5. Compared with the earlier installation of a similar system at Capitol Concrete Products, the project went smoothly, largely as a result of lessons learned. In spite of poor weather, plant installation and check out proceeded smoothly. None of the plant failures were due to systemic causes. No major problems were encountered during installation and check out.

6. During the operational phase, the major problem areas were due to the impact of weather on plant availability operation. The plant was down for thirty days due to a single failure of the drain down system. A second case of feedwater line freezing occurred. Failures due to ice occurred involving both the azimuth and elevation drives. Minor wind damage was experienced during the evaluation period, and serious damage was done to the plant by very high winds subsequent to the conclusion of the evaluation period.

System designers need to take these experiences into account if the technology is to become generally acceptable to industrial users. The extra expense of a hot oil receiver and a heat transfer loop may ultimately be cost effective in comparison to the cost of fluid loop maintenance and plant down time due to water freezing. Freeze protection proved to be a vulnerable point for the Topeka plant as well. Environmental protection for the elevation and azimuth drive should also be considered. The concept of enclosing the collector in a transparent structure may warrant reconsideration.

PRECEDING PAGE BLANK NOT FILMED

A realistic option would seem to be to operate the plant for the period March through October only. The energy production loss would be on the order of 20 per cent, at most. The avoided maintenance cost might be on the order of 75 per cent.

7. Further study is needed of the factors important to system performance. We believe that the collector performed below its potential, even given the weather effects experienced. At this time, insufficient understanding exists of the variables involved to systematically improve performance. The variables are believed to include inherent seasonal variations in focus which can be optimized, maintenance of the mirror surfaces, proper focussing and refocussing procedures, etc. System modelling and comparative operation in a controlled, test site environment are needed to address these issues.

8. This study did not specifically address system economics, a critical issue to technology diffusion. It is clear from the project that maintenance expenses can be very high in relationship to the value of energy produced. It is both indicative and hopeful that the high maintenance items are common components which are not special to solar energy systems. System designers should aim to simplify components from the perspective of potential material and subcomponent failures. USAF should be aware that the near-term promise for lowered system costs for this technology, which seemed likely two years ago, has probably been substantially delayed due to a change in national priorities and reduction of federal R&D funding.

9. Due to the unresolved, yet potentially promising potential of the technology to contribute to USAF energy needs, we recommend repair of the plant and continued operational test, especially during the summer months.

VI. New Technology

No reportable items of new technology have been identified.

Appendix A:

Description of PKI Collector

PRECEDING PAGE BLANK NOT FILMED

Description of The PKI Collector

Design elements

The PKI collector has three primary subsystems: the square dish concentrator, the receiver/fluid loop, and the microprocessor. These subsystems are described below:

The Square Dish Concentrator

The square dish provides the point-focussing function of the PKI system. It consists of 864 flat, one-foot-square, second-surface, silvered glass mirrors. The mirrors are affixed to rows of identical curved supports positioned in a faceted Fresnel design.

Each mirror assembly within the dish rotates through its center of gravity to provide elevation tracking. Two drag links each serve to interconnect half of the mirror assemblies. Each drag link is moved by a lead screw worm gear drive, which is mechanically connected to the elevation drive motor.

The dish is supported by a lightweight spaceframe structure composed of steel tubing members and steel plate joints. This design distributes all wind and gravity loads to the base supports.

The base of the structure is a circular track, inverted to eliminate problems of dirt and ice build-up. The track rides on wheels mounted on concrete piers and is motor-driven by a simple, reliable sprocket/roller chain assembly. The rotation of the entire collector on its base provides azimuthal tracking.

The Receiver/Fluid Loop

A well-insulated galvanized steel receiver is mounted on a boom at the focal point area of the square disk concentrator. A variety of receivers appropriate for specific applications have been tested, including monotube and parallel tube configurations.

The Microprocessor

A microprocessor-based package provides automatic two-axis tracking and operational control. Shadowbands mounted on the dish are the basis for active tracking during sunny periods. A software program provides azimuthal tracking during cloudy periods so that collection can begin immediately upon reappearance of the sun.

This feature permits the system to begin collection of energy after an extended cloudy period within 10 minutes of detection of a threshold insolation level. An added advantage is the reduction in parasitic losses, since a large motor is not required in order to "catch up" to the sun position.

The control package also includes a real time clock, digital display, and an integral digital voltmeter.

Automation and Safety Features

One key feature of the PKI collector is its ability to operate in an unattended mode. This is a reflection of the safety features built into the system, the microprocessor control and overall system reliability. The collector is protected against significant damage from any system malfunction or dangerous environmental condition.

Automatic shut-down conditions include boiler overheating, low feedwater pressure, high winds, user-initiated manual stow, controller failure, AC power loss, low focus, and activation of the low limit switch on the elevation drive.

Although all control functions are automatic and do not require a human operator, periodic inspection is naturally required for maintenance and to resolve shutdowns.

Realiability and Ease of Installation

Realiability has been enhanced through recent design modifications that have either reduced the number of parts or provided for additional standardization. Other refinements have been made to enhance ease of installation and maintenance.

Platforms have been incorporated into the space frame supporting structure to allow safe and easy installation of mirror assemblies and the elevation drive package. The drag link assemblies are located behind the face of the collector, allowing ready access from the working platforms. An electric winch is incorporated into the design to permit easy raising and lowering of the boom for servicing the receiver.

(A review of the PKI technology is given in Applied Concepts Corporation's "Verification Testing of the PKI Collector at Sandia National Laboratories, Albuquerque, New Mexico and JPL's "The Solar Thermal Report" Vol 3, Number 2, Feburary/March 1982.)