NASA TM-85849

NASA Technical Memorandum 85849

USAAVRADCOM Technical Report-83-A-13

NASA-TM-85849
19840001967

FOR REFERENCE

NOT TO BE TAKEN FROM THIS ROOM

A Simulation Investigation of the Effects of Engine-and Thrust-Response Characteristics on Helicopter Handling Qualities

Lloyd D. Corliss and Chris L. Blanken

LIBRARY COPY

NOV 1 1983

LANGLEY RESEARCH CENTER
LIBRARY, NASA
HAMPTON, VIRGINIA

October 1983

National Aeronautics and
Space Administration

United States Army
Aviation Research
and Development
Command

NASA Technical Memorandum 85849 USAAVRADCOM Technical Report 83-A-13

A Simulation Investigation of the Effects of Engine-and Thrust-Response Characteristics on Helicopter Handling Qualities

Lloyd D. Corliss
Chris L. Blanken, Aeromechanics Laboratory, Research and Technology Laboratories,
U. S. Army Aviation Research and Development Command,
Ames Research Center, Moffett Field, California

National Aeronautics and
Space Administration

Ames Research Center
Moffett Field, California 94035

United States Army
Aviation Research and
Development Command
St. Louis, Missouri 63166

N84-10034 #

A SIMULATION INVESTIGATION OF THE EFFECTS OF ENGINE- AND THRUST-RESPONSE CHARACTERISTICS ON HELICOPTER HANDLING QUALITIES

Lloyd D. Corliss and Chris L. Blanken
Aeromechanics Laboratory
U.S. Army Research and Technology Laboratories (AVRADCOM)
Moffett Field, California 94035, U.S.A.

Abstract

The effects of thrust-response characteristics on helicopter handling qualities have until recently remained largely undefined. A multi-phase program is being conducted to study, in a generic sense and through ground simulation, the effects of engine response, rotor inertia, rpm control, excess power, and vertical damping on specific maneuvers included in nap-of-the-Earth (NOE) operations.

This study concentrates specifically on the helicopter configuration with an rpm-governed gas-turbine engine and expands on handling-qualities-criteria data by focusing on aspects peculiar to rotary-wing and NOE operations. The paper summarizes the results of three moving-based piloted simulation studies and explores the frequency characteristics of the helicopter thrust response which set it apart from other VTOL types. Power-system response is affected by both the engine-governor response and the level of rotor inertia. However, results indicate that with unlimited power, variations in engine response can have a significant effect on pilot rating, whereas changes in rotor inertia, in general, do not. The results also show that any pilot interaction required to maintain proper rpm control can significantly degrade handling qualities. Data for variations in vertical damping and collective sensitivity are compared with existing handling-qualities specifications, MIL-F-83300 and AGARD 577, and show a need for higher minimums for both damping and sensitivity for the bob-up task. Results for cases of limited power are also shown.

Notation

J_e = engine-transmission inertia, kg m^2 (slug ft^2)

J_p = total power-train inertia: $J_p = J_e + J_R$, kg m^2 (slug ft^2)

J_R = rotor inertia, kg m^2 (slug ft^2)

K_A = gain of the engine governor

K_B = gain of the rotor transmission

$K_n, K_e, K_1, K_2, K_{cc}, K_{PT}, K_p, K_R, K_T, K_q, \tau_e, \tau_p$ = engine parameters (see Fig. 3)

N_1 = engine gas-generator speed, rpm

N_{11} = engine power-turbine speed, rpm

$N_{11_{com}}$ = set speed, rpm

NOE = nap of the Earth

Q_{lim} = maximum torque, N-m (ft-lb)

Q_{PT} = power-turbine torque, N-m (ft-lb)

Q_{ra} = torque required, N-m (ft-lb)

T_{MAIN} = thrust, main rotor, N (lb)

T/W = thrust-to-weight ratio

Z_w = vertical damping, sec^{-1}

$Z_{w_{FUS}}$ = fuselage vertical damping, sec^{-1}

$Z_{w_{INFLOW}}$ = inflow vertical damping, sec^{-1}

Z_{w_S} = stability augmentation vertical damping, sec^{-1}

Z_{δ_c} = collective sensitivity, g/cm (g/in.)

ζ_n = damping ratio

τ_e = engine response time, sec

τ_G = engine-governor response time, sec

τ_{RT} = rotor-transmission response time, sec

Ω = rotor speed, rad/sec

ω_F = fuel flow, kg/hr (lb/hr)

ω_n = power-system undamped natural frequency, rad/sec

1. Introduction

The current U.S. military helicopter handling-qualities specification, MIL-H-8501A,[1] is a 1961 revision of a 1952 document. This specification contains vertical-axis criteria that are inadequate for either handling-qualities testing or rotorcraft design guidance. The more recent V/STOL handling-qualities specification, MIL-F-83300[2] (1970), does address vertical handling qualities in more depth; however, these criteria are based on fixed-wing VTOL studies characterized by a configuration as shown in Fig. 1 which is not, in general, comparable to that of a rotary-wing aircraft whose configuration is shown in Fig. 2. The thrust response of an rpm-governed helicopter is a more

complex function of stored energy, governed response, and inflow damping and cannot be characterized as a first-order response.

A joint Army/Navy effort is underway to develop a new general specification for handling qualities of military rotorcraft.[3] As is indicated in Ref. 3, previous efforts to revise MIL-H-8501A showed that the primary obstacle to developing new requirements is a lack of systematic data from which new criteria could be derived and used for substantiation. To aid in this endeavor, piloted simulation studies of helicopter thrust response were conducted by the U.S. Army Aeromechanics Laboratory at Ames Research Center. In this program, the effects on handling qualities of engine-governor response times, excess power, rotor rpm control, and height damping for specific nap-of-the-Earth (NOE) maneuvers of a generic helicopter have been studied.

Initial results, which are reported in Ref. 4, discuss the influence of the basic engine-governor response time and the effect of vertical damping and excess power on helicopter handling qualities. The subsequent results of Ref. 5 address the influences of rotor inertia and rpm control. This report summarizes those results and shows the effects and trade-offs between the influences of engine response time and the response time associated with rotor inertia. In addition, the uniqueness of the helicopter thrust frequency response, which differs from that of other VTOL types, is discussed.

The following section reviews the experimental design, including the engine model, the simulator facilities, the test, and experimental variables. The final sections summarize and compare the results of Refs. 4 and 5.

2. Description of Experiment

Engine Model

The basis for the gas-turbine engine model used in this program is a model developed for real-time simulation by Bell Helicopter[6] and represents an XT-53 engine with the inertias for a UH-1C rotor and transmission system. A block diagram of the adaptation of that model for this study is shown in Fig. 3. Provisions are included for torque limiting Q_{lim} at the power turbine stage. By ignoring the nonlinearity of Q_{lim}, a transfer function with a second-order denominator can be generated (Fig. 3). As indicated in Ref. 6, most of the terms of that expression vary as a function of the gas generator speed N_1; for example, with a range of 60-95% on N_1 and including the effects of rotor inertia, the XT-53 engine results in a range of frequencies of ω_n = 1-3 rad/sec and a range of damping ζ_n = 0.6-1.1. In this experiment, the engine terms were held constant for a given configuration so as to hold the engine dynamics constant. In addition to frequency and damping, Q_{lim} was varied to provide a steady-state thrust-to-weight (T/W) maximum in hover ranging from 1.025 to 1.25. However, actual thrust in a transient maneuver can exceed these limits via the stored energy in the rotor system.

Facility

These piloted ground-based simulations were conducted on the Vertical Motion Simulator (VMS) at Ames Research Center. This simulator provides 18.3 m (60 ft) of vertical travel, 6.1 m/sec (20 ft/sec) vertical velocity, and ±1 g vertical acceleration. The drive signal for the simulated vertical motion was obtained by passing modeled aircraft vertical acceleration through a second-order washout filter, with a gain of 0.7 and a washout frequency of 0.35 rad/sec. The simulator cab was configured to include a typical helicopter instrument panel and controller. The initial simulations utilized a single TV monitor visual scene of a model terrain board. For the final simulation, the visual display consisted of a computer-generated image (CGI) scene presented on four windows, furnishing the pilot with a 28° × 120° field of view above the instrument panel, plus a 29° × 40° right-hand chin-bubble scene. The results in Ref. 5 showed that the differences between the two visual systems were not a factor for the tasks studied in the program. Aural cueing of the rotor rpm fluctuations and blade slap, a visual display of rotor rpm, and an overspeed and underspeed warning light were also provided to the pilot.

This experiment utilized a ten-degree-of-freedom nonlinear, full-force mathematical model termed ARMCOP.[7] The vehicle model represented a 3629 kg (8000 lb), well-augmented, teetering-rotor helicopter to which was added the simplified engine model of Fig. 3.

Task

The evaluation task (Fig. 4) consisted of two phases as described below.

1) Phase I: Starting at 6.1 m (20 ft) and 40 knots, decrease altitude to 3.1 m (10 ft) as rapidly as possible while holding 40 knots. Remain at this altitude as long as possible before applying rapid collective input to clear the 15.2 m (50 ft) obstacles; then drop back to 3.1 m (10 ft) without undershoot as rapidly as possible. Start rapid deceleration to a stabilized hover after clearing last obstacle.

2) Phase II: Bob-up to tree-top height (about 18.3 m (60 ft)) as rapidly as possible and stop quickly so as to just see the target with minimum exposure of the helicopter. Perform rapid and precise heading changes to acquire three targets, then bob-down to reestablish a 3.1 m (10 ft) altitude as rapidly as possible without undershoot.

Three Army and two NASA test pilots served as evaluation pilots for the program. The pilots used the Cooper-Harper Rating Scale[8] to assess the effects of height (or flightpath) control and rotor rpm control on handling qualities. Each phase of the evaluation course was rated separately.

Experimental Variables

The primary variables in this study were those which affect the power-system response time. They are the engine response time (τ_e) and the rotor inertia (J_r).

The other variables were vertical damping (Z_w) and collective sensitivity (Z_{δ_c}) as well as rpm control and excess power.

Figures 1 and 2 depict, respectively, the axis of vertical control for a fixed-wing VTOL (e.g., a jet lift) and a rotary-wing VTOL (e.g., a helicopter). The thrust response (T) for the configuration of Fig. 1 has often been characterized by a first-order time response (τ_T) which, in fact, is identical to the engine response time (τ_e). Configurations of this type form the basis of much of the data which led to the handling qualities specifications MIL-F-83300 and AGARD 577.[9] The thrust response of the configuration shown in Fig. 2 cannot, however, be characterized by a first-order response even when the engine response can. This thrust response is influenced by a combination of the energy stored in the rotor (i.e., rotor inertia), the engine-governor response, and the vertical damping resulting from rotor inflow. Further dissimilarities between the two VTOL types can be noted by a comparison of the thrust frequency responses for a helicopter and a jet-lift VTOL, as shown in Fig. 5. The helicopter frequency-response data were taken from the simulation model used in this experiment for the fast-responding governor at a rotor inertia of 2711 kg m^2 (2000 slug ft^2) and with vehicle dynamics of $Z_w = -0.25\ sec^{-1}$ and $Z_{\delta_c} = 0.118\ g/m$ (0.3 g/in.). The jet-lift VTOL responses were derived analytically, assuming first-order representations for the engine and vehicle characteristics of the configuration shown in Fig. 1. The characteristics for the engine response time was set at 0.3 sec and the vertical damping and sensitivity were set to the same values as used in the helicopter model. Also shown in Fig. 5 are flight data points from tests conducted on an instrumented UH-1H helicopter. The data were extracted from vertical-acceleration responses for a collective swash plate input driven by onboard-computer-generated sinusoids. Note that both the UH-1H flight data and the simulation-model data display a phase lead over a significant frequency range that is not present in the fixed-wing response. This, too, clearly indicates that the helicopter thrust response cannot be characterized, as is the jet-lift response, by a first-order response. The nature and cause of this apparent lead is the subject of further analysis, which is presently under way.

To better understand the influence of the helicopter engine response and rotor inertia on the power-system response, consider Fig. 6, which approximates the power-system model of Fig. 3. This approximate model is represented by two cascaded first-order responses where the first time constant τ_G results from the engine-governor characteristics, and the second time constant τ_{RT} is a function of the rotor-transmission inertia ($J_p = J_R + J_e$). Together, these characteristics, along with the gain terms K_A and K_B, form the second-order transfer function shown in Fig. 6. This transfer function is similar to the one shown in Fig. 3, and, for the condition $K_2 << K_e K_1$, a term-by-term comparison can be made as follows:

$$K_A \cong K_n K_1 (K_e/\tau_e)$$

$$\tau_G \cong \tau_e$$

$$K_B \cong K_p/\tau_p$$

$$\tau_{RT} \cong \tau_p/(K_p K_q + 1)$$

and

$$\omega_n \cong (1/\tau_G \tau_{RT} + K_A K_B)^{1/2}$$

$$\zeta_n \cong \frac{1/\tau_G + 1/\tau_{RT}}{2\omega_n}$$

As can be noted by the expression for ω_n, any particular value can be arrived at by various combinations of engine or rotor characteristics. The total power-train inertia (J_p), including rotor, power turbine, and transmission inertia, is embedded in K_p and τ_p by the expression

$$\tau_p/K_p \cong J_p K_R K_T$$

Therefore, K_B is inversely proportional to J_p and τ_{RT} is directly related to J_p. Hence, both ω_n and ζ_n vary as a function of inertia as well as engine response τ_G. Table 1 provides a summary of the configuration characteristics in terms of frequency and damping. The experiment reported in Ref. 4 was concerned with changes to the engine-governor characteristics (i.e., K_A and τ_G) while holding the rotor-transmission characteristics (i.e., K_B and τ_{RT}) constant. The data from that experiment are only valid for the limiting case in which the rotor-transmission time constant is uncharacteristically small. For the results reported in the Ref. 5 experiment, three engine configurations (from Ref. 4) were considered; they represent slow-, intermediate-, and fast-responding engine governors. With each of these configurations, a range of rotor inertias from 271 to 5422 kg m^2 (200 to 4000 slug ft^2) was studied. This range translates into Lock numbers of $\gamma = 3$ to 40 for the particular teetering-rotor system modeled. During the experiment, however, changes in inertia were made in the power-train equations only, and the Lock number in the vehicle equations was held constant at 6.45 to retain constant vehicle dynamics. This approach was considered equivalent to augmenting vehicles with different Lock numbers to provide identical responses.

Figure 7 shows the values of the natural frequency of the power system for three governors over the inertia range investigated. Each of the points shown in this figure is based on time-history measurements.

As indicated, the study provided conventional displays of rpm, including an overspeed and underspeed warning light, and aural cueing. The experience and training of the pilots dictated that rpm variations

greater than about 5% over and 10% under the reference rpm are undesirable levels. Since these levels of variation are a matter of training and are based on current-generation rotor and power systems, and since future, more robust or better regulated systems could reduce the need for pilot interface in this area, it was considered useful to assess the effects of the secondary task of rpm control on pilot ratings. To investigate this effect, several configurations were reevaluated with and without the visual presentations of rpm variations and rpm sound cueing.

Other variables in this program included changes to vertical damping (Z_w) and collective sensitivity (Z_{δ_c}) which were made via a standard augmentation approach as shown by Z_{w_S} in Fig. 2. The vertical damping (Z_w) of the vehicle in these experiments was represented by both an aerodynamic ($Z_{w_a} = Z_{w_{FUS}} + Z_{w_{INFLOW}}$) and stability augmentation (Z_{w_S}) contribution. For the model used in these experiments, the aerodynamic damping in hover was $Z_{w_a} = -0.25\ \text{sec}^{-1}$. Changes in excess power were imposed by placing limits on Q_{lim} in Fig. 3. Within these limits, ranges of engine response times (τ_e), rotor inertias (J_r), and steady-state thrust-to-weight ratios (T/W = 1.025 to 1.25) were considered.

3. Results

The primary results of this study, which are discussed below, include the effects of power-system response, rpm control, vertical damping and collective sensitivity, and excess power.

Power-System Response

As has been demonstrated in Fig. 6, the overall power-system response (ω_n) is a function of both the engine-governor response (τ_G) and the rotor-transmission response (τ_{RT}). The results of Ref. 4 indicate that a marked degradation in pilot rating occurs with decreases to ω_n, owing to increases in τ_G. Figure 8 indicates this effect by showing the results in terms of pilot rating for the three engine-governors described in Fig. 7 and for the case of unlimited power. A different effect, however, is noted for decreases in ω_n, owing to an increase in τ_{RT} (i.e., J_p) as was reported in Ref. 5. Figure 9 shows the results of variations in the rotor inertia with the three governor types for the unlimited power case. Note that for increased inertia (i.e., increased τ_{RT} or decreased ω_n) the pilot ratings actually improve slightly. These results lead to the conclusion that ω_n cannot be used as a unique measure of the power-system contribution to handling qualities since alterations to this parameter caused by τ_G or τ_{RT} have different and opposing effects on pilot rating.

rpm Control

The effects on handling qualities for pilot control of rotor rpm droop and overspeed characteristics were also evaluated in Ref. 5. The requirement to maintain rotor rpm within the tolerable limits of +5% and -10%, forms a secondary task. A measure of the effect of rpm control on the handling-qualities rating is shown in Fig. 10.

The solid circles represent averaged pilot-rating data for the configurations with full rpm cueing which included gauge, overspeed/underspeed warning light, and rotor rpm sound system. The open circles are the averaged data with the above cues removed. The no-cueing cases were accomplished by presenting the pilot with a constant or ideal rpm display and sound system while allowing normal rpm to couple into the engine and vehicle models. The datum point for the ideal governor in Fig. 10 indicates the best rating possible for this particular vehicle and task and forms a basis for comparing all the other data on the figure. Note that with no cueing, the slow-governor-response case couples sufficiently with the vehicle to provide pilot rating degradation of about 1-1/2 and an additional degradation of about two ratings occurs with full rpm cueing. For the intermediate- and fast-responding governors, however, the degradation in pilot ratings appears to be a result only of rpm control.

Vertical Damping (Z_w) and Collective Sensitivity (Z_{δ_c})

Figure 11 shows the results of variations in vertical damping Z_w and collective sensitivity Z_{δ_c} for the bob-up maneuver with the fast power-system response of $\omega_n = 9.3$ rad sec^{-1}. Also shown on this figure are the criteria from MIL-F-83300 and AGARD 577. Note that for this task a higher minimum for both Z_w and Z_{δ_c} is indicated. Moreover, for the fast power-system response, when Z_w is varied with available power (T/W), a high level of damping proves optimum, as shown in Fig. 12. This figure indicates that for the bob-up maneuver a level of damping of around $Z_w = -0.8$ sec^{-1} yields the best handling qualities at levels of limited power from T/W = 1.025 to 1.25. Both Figs. 11 and 12 call for a new look at vertical response criteria for helicopters when performing such a task.

Excess Power

A final consideration of this experiment program[4,5] is the effects resulting from the excess power required for changes in rotor inertia. Figure 13 presents data for the low- and moderate-inertia cases. For both the fast and slow engine governor and with a rotor inertia of 2711 kg m^2 (2000 slug ft^2), no significant degradation in handling qualities occurred, even at very low T/W ratios (T/W = 1.025). Even though the bob-up task demanded relatively large values of instantaneous power, it did not require long-term changes in the power required. Although power limiting did occur in these cases, sufficient energy was stored in the rotor to perform the task without degraded handling qualities. For the low-inertia cases[4] pilot ratings degraded significantly around T/W = 1.1. These data would indicate that for aggressive transient flying with at least a moderate inertia, excess power is not

as significant a factor in determining handling qualities as is governor response.

4. Conclusions

A piloted simulation study was conducted on a large moving-based simulator to investigate the effects on handling qualities of engine-governor response times, rotor inertia, excess power, vertical damping, and rotor rpm control. This study has considered a number of aspects of the vertical response for an rpm-governed helicopter model. Several broad trends were noted, some of which indicate the need for new criteria for the helicopter when performing NOE tasks such as the one studied here.

1) The thrust response of a helicopter is unlike that of fixed-wing VTOL aircraft and thus cannot be governed by criteria tailored to these vehicles.

2) Increasing rotor inertia and engine-governor time constant decrease power-system natural frequency but affect handling qualities in different ways. Increases in governor time constant significantly degrade the handling-qualities rating, but increases in rotor inertia have only a minor and desirable effect on handling qualities. These two parameters must therefore be treated independently in handling-qualities requirements.

3) Increased minimum values for both Z_w and Z_{δ_c} are indicated for a task such as the hover bob-up, and a value of around $Z_w = -0.8\ \text{sec}^{-1}$ appears optimum.

4) The effect on handling qualities of requirements for pilot monitoring and control of rotor rpm can be significant. For a slow engine governor, the degradation in pilot rating in the bob-up task was as much as two ratings. Such an effect warrants the consideration of techniques such as the use of electronic fuel control devices and compensation methods such as an adaptive control to relieve the pilot of the task and concern for maintaining proper rpm.

5) For a task such as the hover bob-up, no significant effect on handling qualities was found when excess power was reduced to a level of 2.5% with a moderate value of inertia.

References

1) General Requirements for Helicopter Flying and Handling Qualities. Military Specification MIL-H-8501A, Sept. 7, 1961.

2) Flying Qualities of Piloted V/STOL Aircraft. Military Specification MIL-F-83300, Dec. 31, 1970.

3) D. L. Key, "The Status of Military Helicopter Handling-Qualities Criteria," Presented at the AGARD FMP Specialists Meeting on Criteria for Handling Qualities of Military Aircraft, Ft. Worth, Texas, Apr. 1982.

4) Lloyd D. Corliss, "The Effects of Engine and Height-Control Characteristics on Helicopter Handling Qualities," Journal of the American Helicopter Society, Vol. 28, No. 3, July 1983.

5) Lloyd D. Corliss, Chris L. Blanken, and Keith Nelson, "Effects of Rotor Inertia and RPM Control on Helicopter Handling Qualities," AIAA Paper 83-2070, Presented at the AIAA Flight Mechanics Conference, Gatlinburg, Tenn., Aug. 15-17, 1983.

6) W. Sanborn and I. Torres, "UH-1C Data for Hybrid Computer Simulation," Report 204-099-892, Bell Helicopter Company.

7) Peter D. Talbot, B. E. Tinling, W. A. Decker, and R. T. N. Chen, "A Mathematical Model of a Single Main Rotor Helicopter for Piloted Simulation," NASA TM-84281, 1982.

8) G. E. Cooper and R. P. Harper, Jr., "The Use of Pilot Rating in the Evaluation of Aircraft Handling Qualities," NASA TN D-5153, 1969.

9) V/STOL Handling. Part I: Criteria and Discussion; Part II: Documentation. NATO AGARD Report 577, June 1973.

Table 1 Summary of configuration characteristics

Power-train inertia, J_p, kg m^2 (slug ft^2)	Engine configurations, $[\zeta_n, \omega_n]$			
	Ideal, $\tau_G = 0$	Fast, $\tau_G = 0.54$ sec	Intermediate, $\tau_G = 1.5$ sec	Slow, $\tau_G = 6.2$ sec
271 (200)		[0.24, 9.3]	[0.76, 7.6]	[1.0, 4.0]
1355 (1000)		[0.40, 3.75]	[0.36, 2.0]	[0.40, 1.23]
2711 (2000)		[0.47, 2.5]	[0.49, 1.27]	[0.33, 0.87]
5422 (4000)		[0.48, 1.85]	[0.46, 0.89]	[0.29, 0.61]

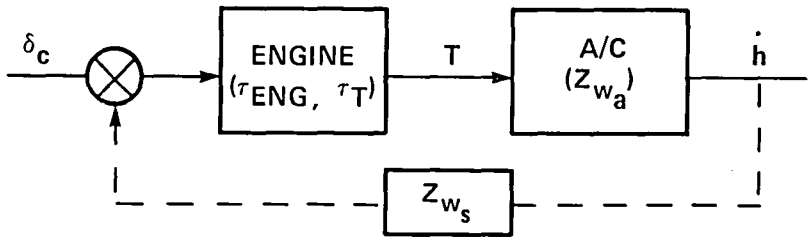

Fig. 1. VTOL vertical control: Fixed wing (jet lift).

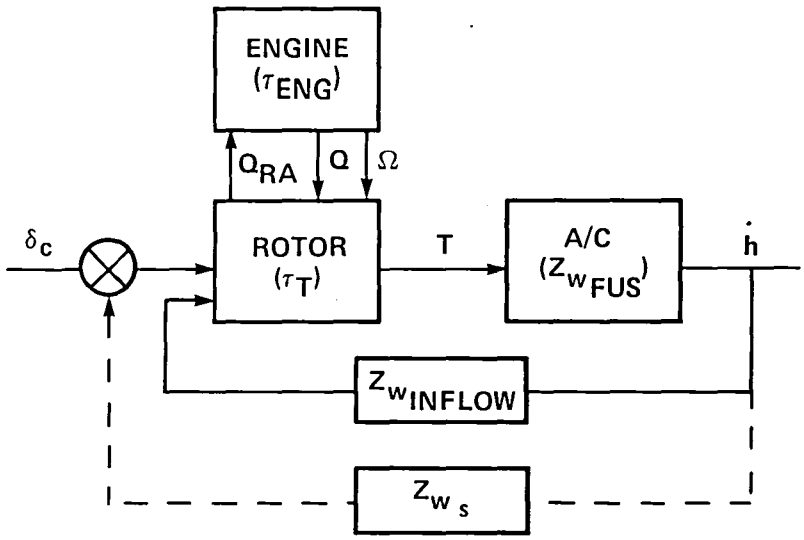

Fig. 2. VTOL vertical control: Rotary wing (helicopter).

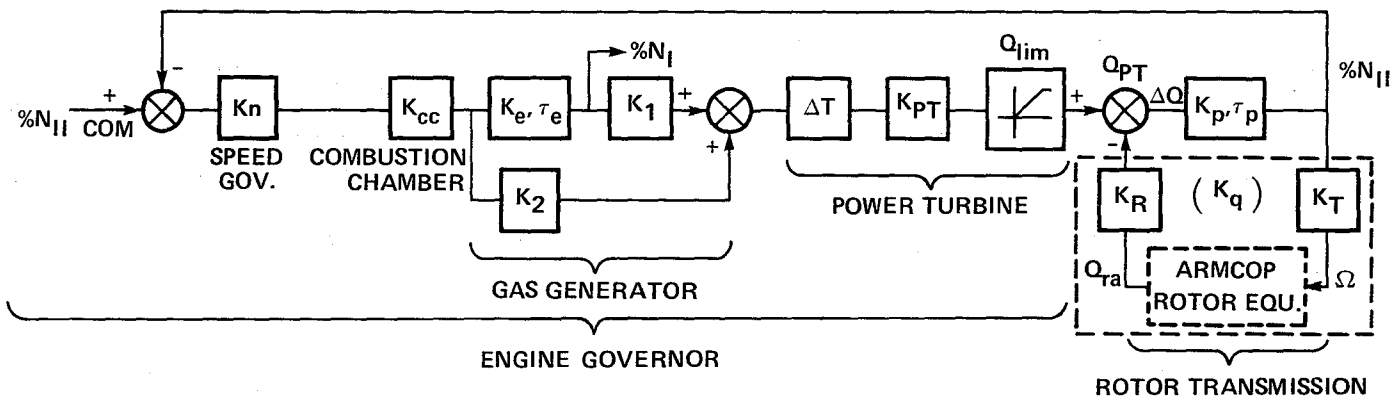

NEGLIGIBLE IF $K_2 \ll K_e K_1$

$$\frac{\%N_{II}}{\%N_{II\ COM}} = \frac{\dfrac{K_n K_{PT} K_p}{\tau_e \tau_p}\left(K_e K_1 + \cancel{K_2}\,(\tau_e S + 1)\right)}{S^2 + \underbrace{\left(\frac{1}{\tau_e} + \frac{1}{\tau_p} + \frac{K_q K_p}{\tau_p} + \frac{K_p K_n K_{PT} K_2}{\tau_p}\right)}_{2\zeta\omega_n} S + \underbrace{\frac{1}{\tau_p \tau_e} + \frac{K_q K_p}{\tau_p \tau_e} + \frac{K_p K_n K_{PT}(K_e K_1 + K_2)}{\tau_p \tau_e}}_{\omega_n^2}}$$

Fig. 3. Detailed power-system model.

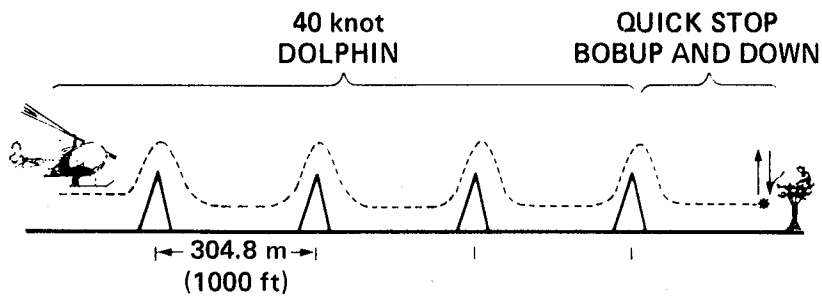

Fig. 4. Simulation task.

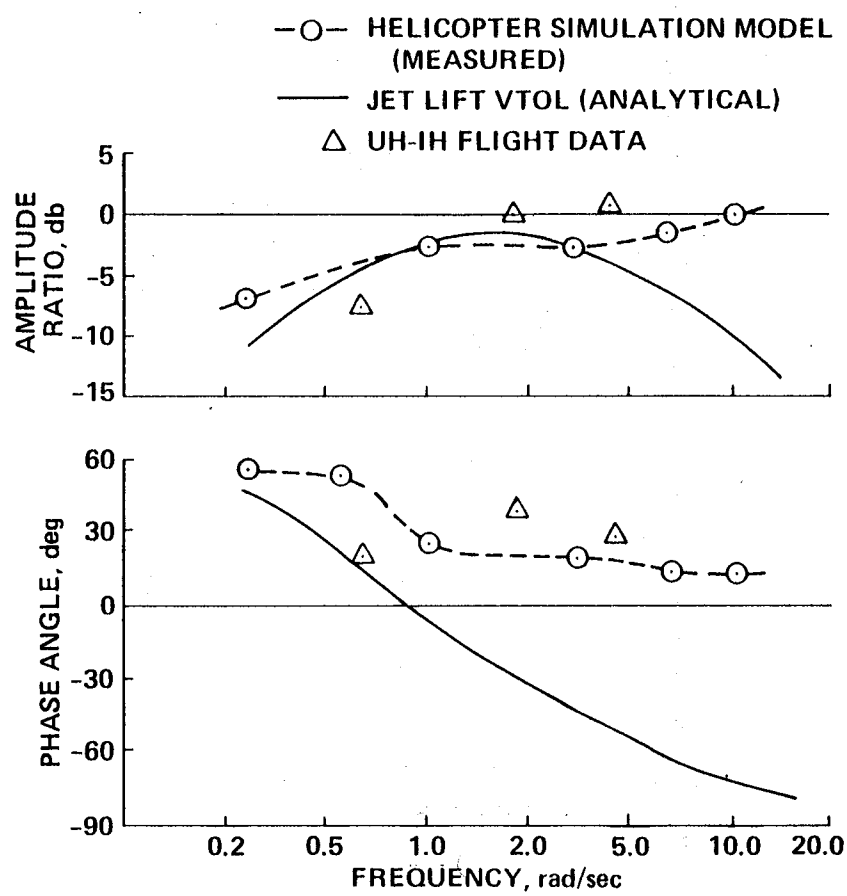

Fig. 5. VTOL thrust frequency response.

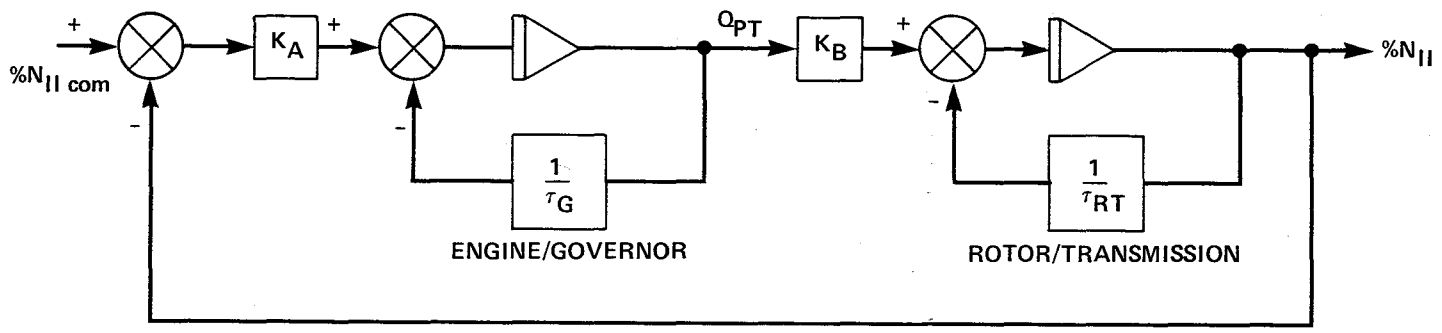

$$\frac{\%\,N_{II}}{\%\,N_{II\,COM}} = \frac{K_A K_B}{s^2 + \underbrace{\left(\frac{1}{\tau_G} + \frac{1}{\tau_{RT}}\right)}_{2\zeta_n\omega_n} s + \underbrace{\frac{1}{\tau_G \tau_{RT}} + K_A K_B}_{\omega_n^2}}$$

Fig. 6. Approximate power-system model.

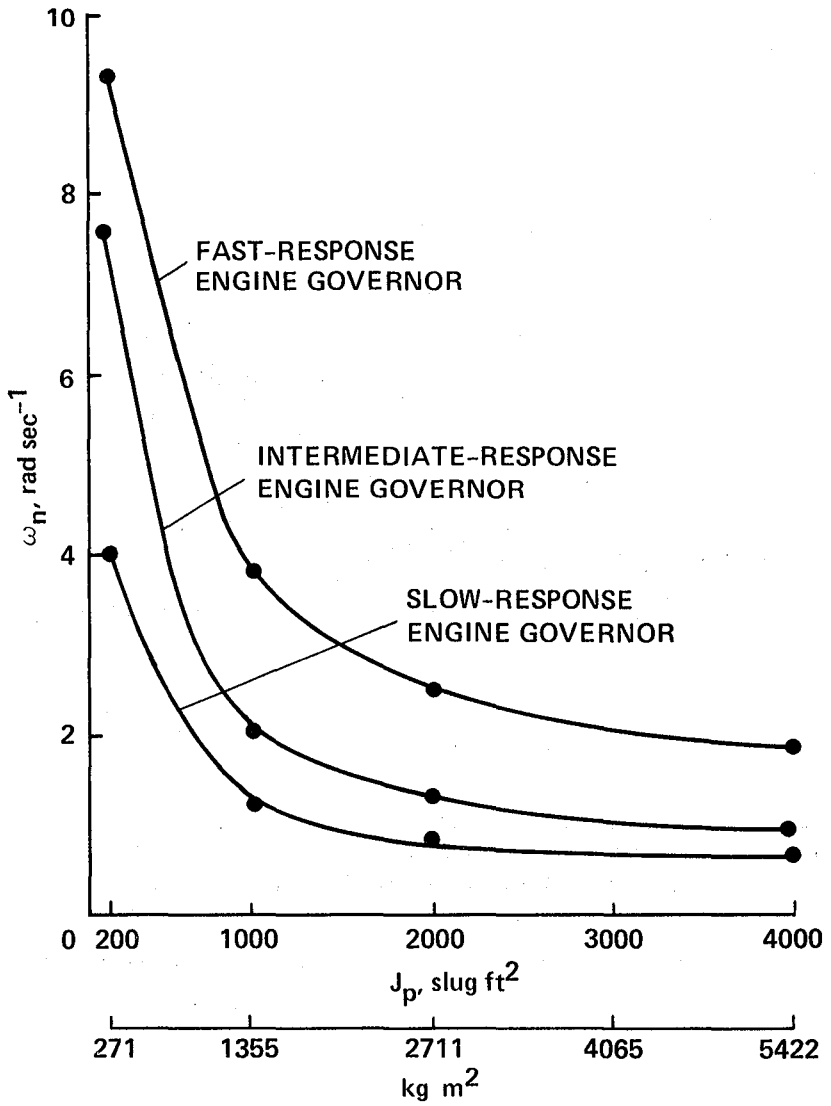

Fig. 7. Power-system natural frequency versus power-train inertia.

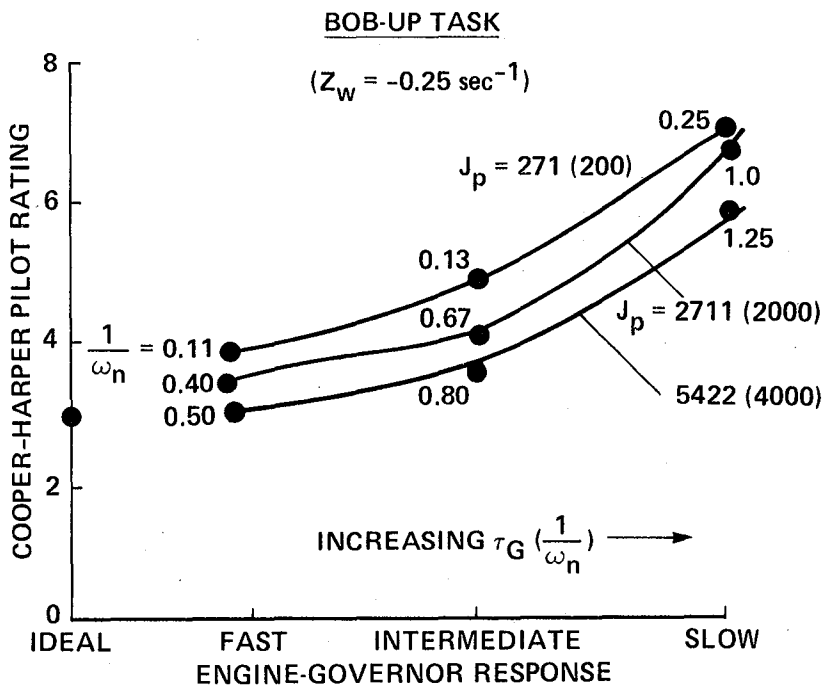

Fig. 8. Trends of pilot rating versus engine-governor response.

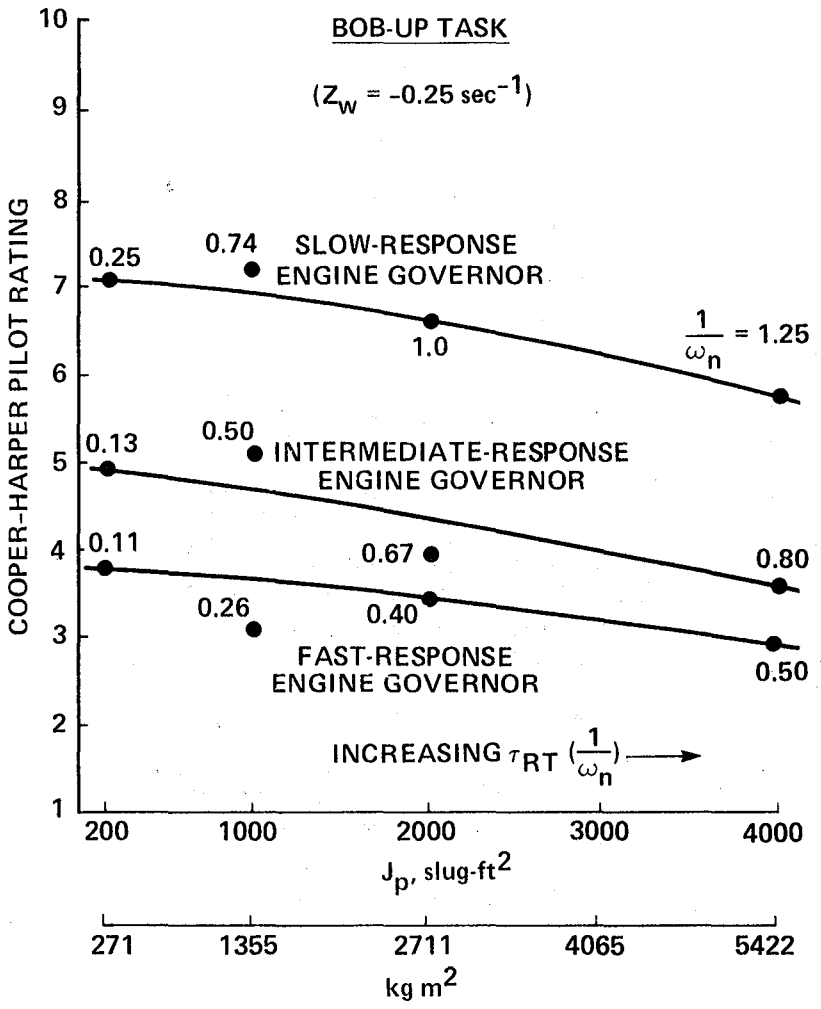

Fig. 9. Trends of pilot rating versus inertia.

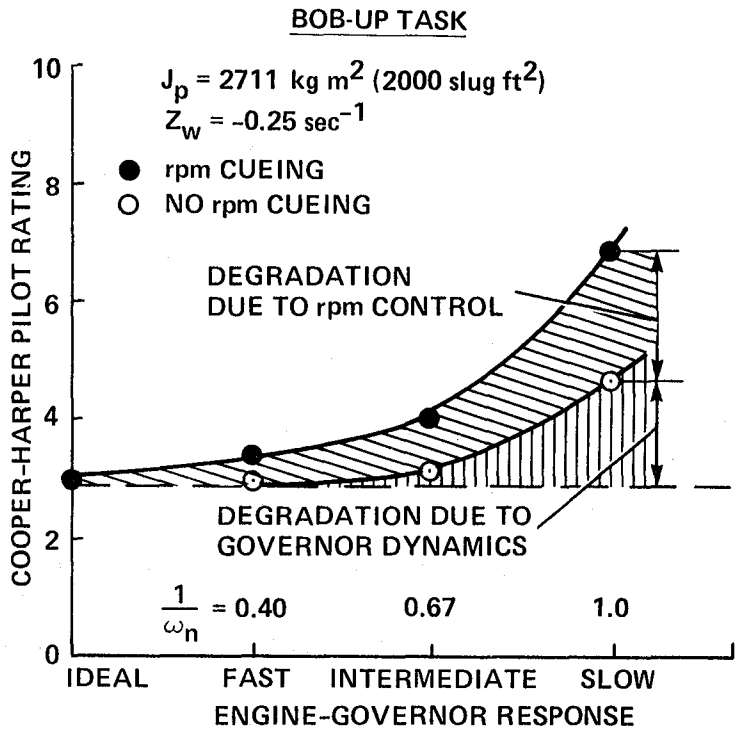

Fig. 10. Effects of rpm control.

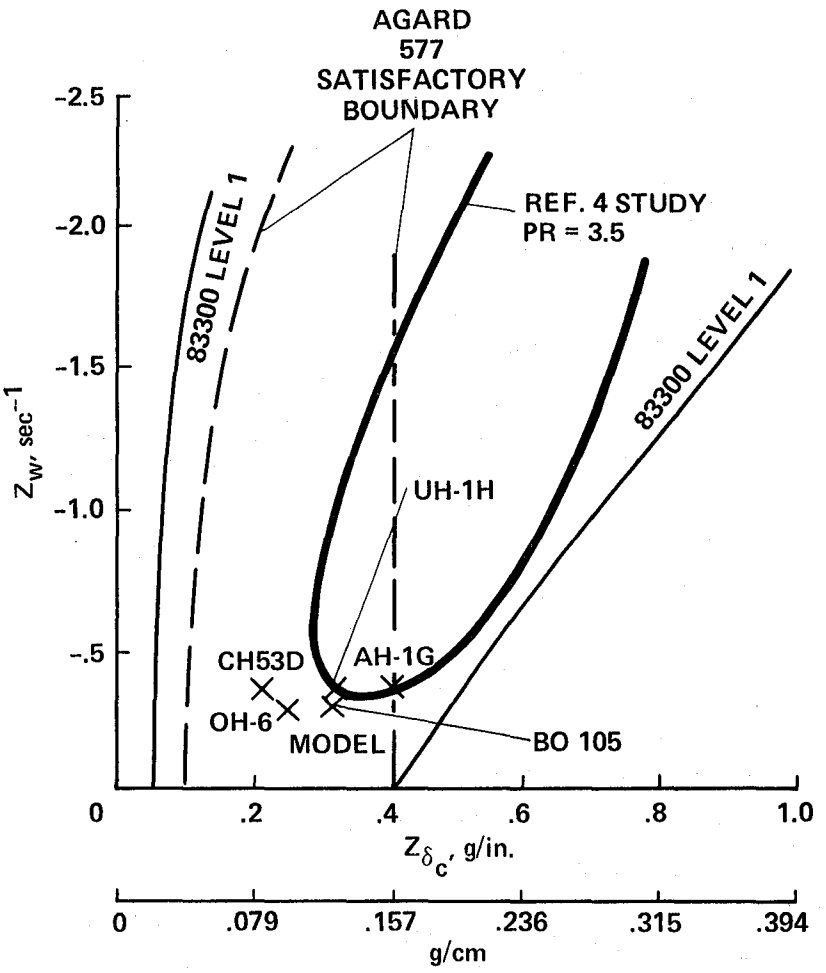

Fig. 11. Comparison of bob-up data with existing criteria.

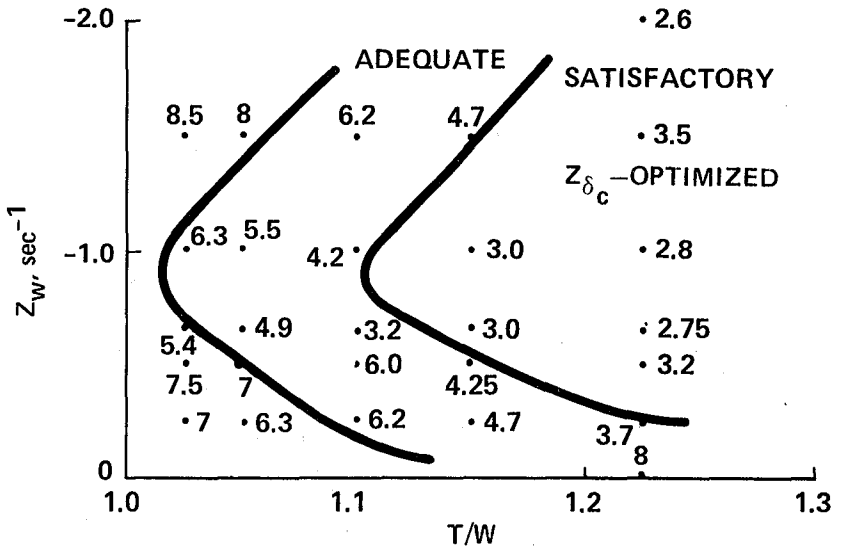

Fig. 12. Vertical damping and T/W — bob-up maneuver.[4]

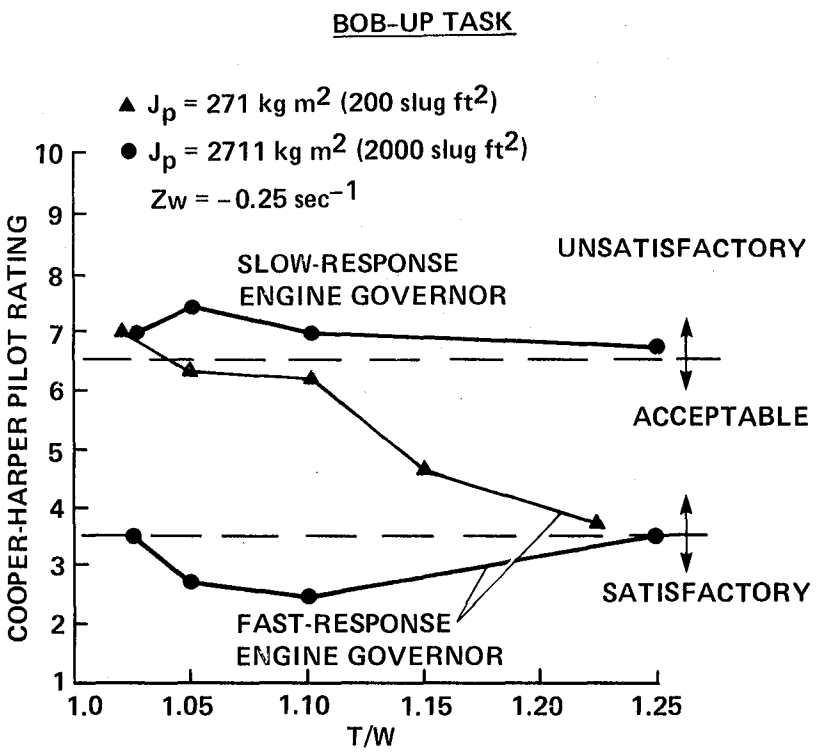

Fig. 13. Excess power effects.

1. Report No.	2. Government Accession No.	3. Recipient's Catalog No.
NASA TM-85849		

4. Title and Subtitle	5. Report Date
A SIMULATION INVESTIGATION OF THE EFFECTS OF ENGINE- AND THRUST-RESPONSE CHARACTERISTICS ON HELICOPTER HANDLING QUALITIES	October 1983
	6. Performing Organization Code
7. Author(s)	8. Performing Organization Report No.
Lloyd D. Corliss and Chris L. Blanken	A-9469
	10. Work Unit No.
9. Performing Organization Name and Address	K-1585
Aeromechanics Laboratory, Research and Technology Laboratories U.S. Army Aviation Research and Development Command Ames Research Center Moffett Field, Calif. 94035	11. Contract or Grant No.
	13. Type of Report and Period Covered
12. Sponsoring Agency Name and Address	Technical Memorandum
National Aeronautics and Space Administration Washington, D.C. 20546 and U.S. Army Aviation Research and Development Command St. Louis, Mo. 63166	14. Sponsoring Agency Code
	992-21-01

15. Supplementary Notes

Presented at the Ninth European Rotorcraft Forum, Stresa, Italy, September 13-15, 1983.
Point of Contact: L. D. Corliss, Ames Research Center, MS 237-7, Moffett Field, Calif. 94035 (415) 965-6269 or FTS 448-6269.

16. Abstract

The effects of thrust-response characteristics on helicopter handling qualities have until recently remained largely undefined. A multi-phase program is being conducted to study, in a generic sense and through ground simulation, the effects of engine response, rotor inertia, rpm control, excess power, and vertical damping on specific maneuvers included in nap-of-the-Earth (NOE) operations.

This study concentrates specifically on the helicopter configuration with an rpm-governed gas-turbine engine and expands on handling-qualities-criteria data by focusing on aspects peculiar to rotary-wing and NOE operations. The paper summarizes the results of three moving-based piloted simulation studies and explores the frequency characteristics of the helicopter thrust response which set it apart from other VTOL types. Power-system response is affected by both the engine-governor response and the level of rotor inertia. However, results indicate that with unlimited power, variations in engine response can have a significant effect on pilot rating, whereas changes in rotor inertia, in general, do not. The results also show that any pilot interaction required to maintain proper control can significantly degrade handling qualities. Data for variations in vertical damping and collective sensitivity are compared with existing handling-qualities specifications, MIL-F-83300 and AGARD 577, and show a need for higher minimums for both damping and sensitivity for the bob-up task. Results for cases of limited power are also shown.

17. Key Words (Suggested by Author(s))	18. Distribution Statement
Handling qualities, Helicopter, Engine response, Rotor inertia, Handling qualities criteria, Simulation, Thrust response	Unlimited Subject Category: 03

19. Security Classif. (of this report)	20. Security Classif. (of this page)	21. No. of Pages	22. Price*
Unclassified	Unclassified	23	A02

*For sale by the National Technical Information Service, Springfield, Virginia 22161