General Disclaimer

One or more of the Following Statements may affect this Document

- This document has been reproduced from the best copy furnished by the organizational source. It is being released in the interest of making available as much information as possible.

- This document may contain data, which exceeds the sheet parameters. It was furnished in this condition by the organizational source and is the best copy available.

- This document may contain tone-on-tone or color graphs, charts and/or pictures, which have been reproduced in black and white.

- This document is paginated as submitted by the original source.

- Portions of this document are not fully legible due to the historical nature of some of the material. However, it is the best reproduction available from the original submission.

Produced by the NASA Center for Aerospace Information (CASI)

(NASA-CR-174536) VIBRATION CONTROL OF LARGE LINEAR QUADRATIC SYMMETRIC SYSTEMS Ph.D. Thesis (Houston Univ.) 104 p HC A06/MF A01 CSCL 20K

N84-10608

Unclas

G3/39 15199

Vibration Control of Large Linear Quadratic Symmetric Systems

A Dissertation

By

Gi Joon Jeon

NOV 1983
RECEIVED
NASA STI FACILITY
ACCESS DEPT.

Department of Electrical Engineering

Cullen College of Engineering

University of Houston

The research effort and the work described in this Dissertation for the degree Doctor of Philosophy was partially supported by NASA Langley Research Center, Hampton, Virginia under Grant NSG 1603 and NAG-1-370.

VIBRATION CONTROL OF
LARGE LINEAR QUADRATIC SYMMETRIC SYSTEMS

An Abstract of

A Dissertation

Presented to

The Faculty of Systems Science and Engineering

University of Houston

In Partial Fulfillment

of the Requirements for the Degree

Doctor of Philosophy

By

Gi Joon Jeon

October, 1983

ABSTRACT

The objective of the research was to develop numerical methods of reducing the computational task associated with the assignment of damping to the large flexible space structure, the dynamics of which had been approximated to a second-order linear matrix ordinary differential equation by the finite-element method.

An efficient decoupling algorithm by which selected modes can be damped while the other modes retain their pole locations was devised in order to alleviate the computational burden caused by the high dimension of the system. Some unique properties on a class of the second-order lambda-matrices were found and applied to determine a damping matrix of the decoupled subsystem in such a way that the damped system would have pre-assigned eigenvalues without disturbing the stiffness matrix. The resulting system was realized as a time-invariant velocity only feedback control system with desired poles. Another approach using optimal control theory was also applied to the decoupled system in such a way that the mode spillover problem could be eliminated. The procedures were tested successfully by numerical examples.

Since the decoupling procedure required only eigenvectors of the selected modes, the computing time was reduced significantly when the number of modes involved in damping

PRECEDING PAGE BLANK NOT FILMED
III, IV

assignment was less than one fourth of the total modes. Therefore, in large systems, only a few of the low frequency modes need additional damping and the methods of decoupling and control developed in this work may be attractive for the vibration control of the large flexible space structure.

TABLE OF CONTENTS

CHAPTER		PAGE
ABSTRACT		v
LIST OF TABLES		ix
LIST OF FIGURES		x
I	INTRODUCTION	1
	1.1 Overview	1
	1.2 Previous Work and Related Literature	4
II	FORMULATION OF THE PROBLEM	9
	2.1 Description of Mathematical Model	9
	2.2 Statement of the Problem	13
III	LAMBDA-MATRICES AND LINEAR SYSTEMS	17
	3.1 Lambda-Matrices, Matrix Polynomials and Solvents	17
	3.2 Properties of $A(\lambda) = I\lambda^2 + C\lambda + K$	19
	3.3 Bounds on Latent Roots of $A(\lambda)$	27
IV	SYNTHESIS OF DAMPED SYSTEM BY EIGENVALUE RELOCATION	32
	4.1 Decoupling of the Stiffness Matrix	32
	4.2 Computational Procedure for the Damping Matrix Determination	37
	4.3 Velocity Feedback Control Scheme	41
	4.4 Illustrative Examples	45
V	OPTIMAL CONTROL OF SELECTED MODES	52
	5.1 Introduction	52
	5.2 Mode Decoupling of the State Matrix	54
	5.3 Optimal Control of Undamped Decoupled Systems	59
	5.4 An Illustrative Example	64

VI CONCLUSION 68

5.1 Conclusion. 68
5.2 Recommendations for Further Work. . . . 72

REFERENCES 73

APPENDIX A 79

APPENDIS B 87

APPENDIX C 92

APPENDIX D 93

APPENDIX E 94

APPENDIX F 95

LIST OF TABLES

TABLE		PAGE
1	Natural Frequencies ω_i in Example 1 . . .	46
2	The Computed Damping Matrix C	47
3	Eigenvalues of the Closed-Loop System (Example 1)	48
4	Natural Frequencies ω_i in Example 2 . . .	49
5	Eigenvalues of the Closed-Loop System (Example 2)	51
6	Eigenvalues λ_i of the System Matrix (Example 3)	67

LIST OF FIGURES

FIGURE		PAGE
1	Feasible region of latent roots of the underdamped system $A(\lambda)=I\lambda^2+C\lambda+K$	25
2	Classification of system $A(\lambda)=I\lambda^2+C\lambda+K$ by the stability of the modes.	26
3	Shifts of latent roots after damping is assigned (classical normal mode case). . .	28
4	Shifts of latent roots after damp. g is assigned (general case).	29

CHAPTER I

INTRODUCTION

1.1 Overview

It is well known that one of the problems inherent in control of large space structures is that of vibration suppression. The vibration control is crucial especially when the structure is very large and mechanically flexible. In particular, space structures such as satellite antennas or solar energy collecting panels are expected to be very large. Fortunately, with the advent of a space transportation system the concept of the large and flexible space structures has become more realizable than ever before. However, because of the capacity limitations of the space transportation system it may be mandatory that the structure be constructed of light materials which have very low natural damping. Therefore, it is obvious that a certain control action is required to provide the large structure with sufficient damping, which in turn could maintain the stability of the structure against possible disturbances. This comparatively new control problem within the field of multivariable control systems was considered in this work and a candidate solution to the problem was addressed.

A large space structure may be described as a continuum

by a set of simultaneous partial differential equations [1]. The parameters contained in the equations are, in general, continuous functions of the spatial variables. Thus the control system is in the realm of a distributed parameter system. However, even though the distributed parameter system is rich in theory [2-4] the implementable sensors and actuators are difficult to obtain in the infinite dimensional space. Consequently, a common approach to modeling is to convert the partial differential equations of the distributed system into an infinite set of ordinary differential equations through spatial discretization [5-7]. A finite number of modes are then retained for control. The resulting second-order linear matrix differential equation is now of high dimension and is difficult to handle on a digital computer. Moreover, the dimensionality problem is compounded when the second-order matrix differential equation is recast in the state variable form.

The objective of this work is to investigate numerical methods based on the properties of the second-order lambda-matrices and to devise methods of reducing the computational task associated with the finite-element model and the assignment of damping to the structure. The damping assignment will proceed in two different directions; eigenvalue relocation by velocity feedback and optimal control. Each of the methods will be based on devising an efficient decoupling

technique by which selected modes can be damped with all other modes retaining their pole locations. Although it may not be necessary, the theory of the eigenvalue relocation will be developed on the basis that the stiffness matrix will not be changed.

In this work we employed the properties of the lambda-matrices with the hope that we could alleviate the dimensionality problem mentioned above. Since the inception of the term "lambda-matrix" [8] much progress has been made on the subject not only in theoretical development but also in the application to the system analysis and design. Nevertheless, the second-order system which is abundant in the real systems, for example, in dynamic structural analysis has often been overshadowed by high-order systems. Although the high-order system embraces the second-order system as a member, the latter may have very unique properties not common to the former. This was the primary motivation of this work.

Therefore, for a class of the second-order lambda-matrices, we established some unique theorems which would explain the movement of latent roots after a damping matrix was added to the undamped system. These theorems were applied to compute the damping matrix of the decoupled subsystem in such a way that the damped system would have exact pre-assigned latent roots without disturbing the stiffness matrix. The resulting system was realized as a velocity feedback

system with desired poles.

The optimal control theory was also applied to the decoupled subsystem so that the computational load for the procedure was reasonable and the mode spillover problem could be eliminated. The method is similar to that of reference [9] where the modes are decoupled and the optimal control is determined for each mode. The main difference is in the method of decoupling and the computaional procedure.

In Chapter II, a large system of second-order ordinary differential equations was formulated by the spatial discretization of the partial differential equations which had been assumed to govern the structure. After changing coordinate systems the statement of the problem was presented. In Chapter III, definitions and theorems on the lambda-matrices were collected and followed by the system properties developed in this work. Based on this work the decoupling scheme, eigenvalue relocation and velocity feedback control synthesis schemes were illustrated with examples in Chapter IV. The modes decoupling procedure of the state matrix and the optimal control of the selected modes were described in Chapter V. The conclusion and recommendations for further research were given in the final chapter.

1.2 Previous Work and Related Literature

1.2.1 Control of Large Structures

In the past several years, diverse groups of scientists

and engineers devoted much effort on the research of large flexible space structures. For a broad view we refer to a comprehensive survey paper [1]. In addition, we list some of the literature which is closely related to our work.

Most works on the control problem of this dynamic system were defined in the state variable form. The primary well-developed feedback control techniques with some variations were applied to this problem: they are optimal control [10] and pole assignment [11] by constant state feedback. These two control schemes were examined in the form of full state feedback for possible use in the active vibration control of the system and some expected problems were pointed out in [12,13].

Most authors avoided full state feedback for several reasons — an awareness of the high dimensionality, the difficulties associated with the measurement of the states as well as the complexity of the Riccati equation. Instead, they chose local states or outputs as feedback and/or worked on decoupled modes independently. In [14] the local control was defined as a control law that included feedback of only those state variables that were physically near a particular actuator. Then a necessary condition for the solution of the linear quadratic optimal control problem with the constraint of the local state feedback was derived. In [15] the sub-optimal output feedback control scheme originated in [16] was

applied to the system instead of the computationally difficult optimal one [17]. However, this result sacrifices the guarantee of stability for the closed-loop control system. Similarly, the inverse optimal control principle [18,19] was applied to select the output feedback gain matrix in an iterative manner [20]. In another note [21], a concept of member damper controllers was introduced and the problem of selecting diagonal velocity feedback gains was formulated as an optimal output feedback regulator problem. Finally, an optimal control of decoupled modes was pursued on the block diagonally decomposed subsystems [9,22,23] rather than on the full system. Also, the same decoupling technique was applied to the control of flexible gyroscopic systems [24,25].

For the same reason as in the optimal control, the pole assignment was carried out by output feedback to alleviate those difficulties mentioned above [26-29]. A direct velocity feedback control was suggested as a special case of the output feedback [30]. Under some restrictions, even though the direct velocity feedback controller can not destabilize any part of the system, the exact pole locations can not be predicted apriori. Therefore, the initial decision of locating and sizing the dampers was based on guesswork and engineering judgement. Concerning this problem an idea [31] was presented, which enabled the researcher to predict analytically the behavior of the closed-loop system by applying root

perturbation techniques. However, this was only possible when the controller was allowed to modify moderately the natural frequencies of the structure.

Aside from the active control, passive energy dissipation mechanisms of the vibrating systems were studied and a future design process for sufficient structural damping was suggested in [32]. Also, a model with the damping matrix proportional to the positive square root of the stiffness matrix was rigorously investigated in [33].

1.2.2 Second-Order Dynamic Systems and Lambda-Matrices

It is well known that undamped linear second-order systems possess classical normal modes, whereas in damped systems this property is generally violated. However, a special class of damped linear systems possesses the classical normal modes. A necessary and sufficient condition for this class of the systems was shown in [34]. Also, the stability was analyzed for second-order systems [35] and for general high-order systems [36]. In [37] the computational methods of eigenvalues and eigenvectors of second-order systems were discussed and these eigen-problems in a user supplied interval were examined in [38]. Finally, controllability and observability [39], a solution of the eigenvalue problem [40], and a modal analysis for the response of this system [41] were studied on linear gyroscopic systems.

On the other hand, the analysis of vibrating systems by

lambda-matrices was introduced in earlier works [8,42]. This mathematical area was rigorously developed by a group of mathematicians and, as a result, a comprehensive treatment was provided in [43]. Along with this development, the algebraic theory of the matrix polynomials [44], algorithms of their solvents [45,46] and spectral factors [46,47] of the corresponding lambda-matrices were established. Also, transformations of solvents and spectral factors were developed in [48]. Consequently, as multivariable theories attracted much attention from engineers lately, those lambda-matrix related theories began to be applied to such engineering fields as filter design [49,50], partial fraction expansions [51] and multivariable control systems in general [52,53].

CHAPTER II

FORMULATION OF THE PROBLEM

2.1 Description of the Mathematical Model

The large space structure is assumed to be described by the following system of partial differential equations [1,5];

$$M_0(p)\frac{\partial^2 u(p,t)}{\partial t^2} + C_0\frac{\partial u(p,t)}{\partial t} + K_0 u(p,t) = f_0(p,t), \quad (2.1)$$

where $u(p,t)$ is the displacement of an arbitrary point p of the domain D off its equiribrium position, $M_0(p)$ is the distributed mass, K_0 is the time-invariant symmetric non-negative differential operator of order 2P, and $f_0(p,t)$ is the distributed control vector. The damping term $C_0\frac{u(p,t)}{\partial t}$, which is symmetric and represents the internal structural damping, is thought to provide the structure with very weak mode damping. The displacement $u(p,t)$ must satisfy the boundary conditions at every point of the boundary S of the domain D;

$$B_i\ u(p,t) = 0, \qquad i = 1,\ldots,P \quad (2.2)$$

where B_i, $i=1,\ldots,P$ are linear differential operators.

Because of the theoretical difficulties and practical complexities arising from the implementation of the infinite

dimensional control system [54] we approximate the infinite dimensional system by a spatial discretization of the partial differential equations. Among a variety of available methods we choose a finite-element method such as Galerkin's method [55].

It is assumed in the method that an approximate solution of (2.1), $\hat{u}(p,t)$, which also satisfies the associated boundary conditions (2.2) could be expressed as

$$\hat{u}(p,t) = \sum_{i=1}^{n} \phi_i(p) v_i(t) \tag{2.3}$$

where $\phi_i(p)$, $i=1,\ldots,n$ are comparision functions[1] depending only on the spatial coordinates and $v_i(t)$, $i=1,\ldots,n$ are time-dependent generalized coordinates. Since (2.3) is only an approximate solution it may not satisfy (2.1) exactly. Hence, in Galerkin's approach, the $v_i(t)$ is chosen to minimize the mean-square equation error when (2.3) is substituted into (2.1).

Once $v_i(t)$ is determined, substituting (2.3) into (2.1), pre-multiplying both sides by $\phi_r^t(p)$ and integrating over

---

[1] Comparision functions are any arbitrary functions satisfying all the boundary conditions of the eigenvalue problem and are 2P times differentiable over domain D[6, P. 140]. In Galerkin's method they could be linear combinations of piecewise linear functions or cubic splines, etc.

ORIGINAL PAGE IS
OF POOR QUALITY

the domain D lead to

$$\sum_{i=1}^{n} \ddot{v}_i(t)\int_D \phi_r^t(p)M_0(p)\phi_i(p)dD + \sum_{i=1}^{n} \dot{v}_i(t)\int_D \phi_r^t(p)C_0\phi_i(p)dD$$
$$+\sum_{i=1}^{n} v_i(t)\int_D \phi_r^t(p)k_0\phi_i(p)dD = \int_D \phi_r^t(p)f_0(p,t)dD, r=1,\ldots,n \tag{2.4}$$

where the superscript t denotes the transpose of the matrix. Thus, by introducing the notations

$$\int_D \phi_r^t(p)M_0(p)\phi_i(p)dD = \hat{M}_{ri},$$

$$\int_D \phi_r^t(p)C_0\phi_i(p)dD = \hat{C}_{ri},$$

$$\int_D \phi_r^t(p)K_0\phi_i(p)dD = \hat{K}_{ri},$$

$$\int_D \phi_r^t(p)f_0(p,t)dD = \hat{f}_r(t),$$

(2.4) reduces to

$$\sum_{i=1}^{n} \hat{M}_{ri}\ddot{v}_i(t) + \sum_{i=1}^{n} \hat{C}_{ri}\dot{v}_i(t) + \sum_{i=1}^{n} \hat{K}_{ri}v_i(t) = \hat{f}_r(t), r=1,\ldots,n \tag{2.5}$$

where $\hat{f}_r(t)$ is the generalized forces associated with the generalized displacement $v_r(t)$. It must be noted that $\hat{M}_{ri}=\hat{M}_{ir}$ and $\hat{K}_{ri}=\hat{K}_{ir}$ because of the charateristics of $M_0(p)$

ORIGINAL PAGE IS
OF POOR QUALITY

and K_0. Now, by letting

$$v(t) = [v_1(t),\ldots,v_n(t)]^t$$

and

$$\hat{f}(t) = [\hat{f}_1(t),\ldots,\hat{f}_n(t)]^t,$$

(2.5) can be written in the matrix from

$$\hat{M}\ddot{v}(t) + \hat{C}\dot{v}(t) + \hat{K}v(t) = \hat{f}(t), \tag{2.6}$$

where the mass matrix $\hat{M}\varepsilon R^{nxn}$ is symmetric positive definite, the damping matrix $\hat{C}\varepsilon R^{nxn}$ is symmetric, and the stiffness matrix $\hat{K}\varepsilon R^{nxn}$ is symmetric semi-positive definite.

By changing coordinates $v(t)$ to $x(t)$ by $x(t)= \hat{M}^{\frac{1}{2}}v(t)$ and pre-multiplying both sides of (2.6) by $\hat{M}^{-\frac{1}{2}}$ we have

$$I\ddot{x}(t) + C\dot{x}(t) + Kx(t) = f(t) \tag{2.7}$$

where I is the (nxn) identity matrix, $C = \hat{M}^{-\frac{1}{2}}\hat{C}\hat{M}^{-\frac{1}{2}}$, $K = \hat{M}^{-\frac{1}{2}}\hat{K}\hat{M}^{-\frac{1}{2}}$ and $f(t) = \hat{M}^{-\frac{1}{2}}\hat{f}(t)$. The change of the coordinates preserves the system eigenvalues as well as the symmetry of the system.

The associated homogeneous system of (2.7),

$$I\ddot{x}(t) + C\dot{x}(t) + Kx(t) = 0 \tag{2.8}$$

can be transformed to a corresponding lambda-matrix by assuming a solution $x(t) = x_0 \exp(\lambda t)$ or by taking the Laplace transform of (2.8) with zero initial conditions.

The lambda-matrix thus obtained is expressed as

$$A(\lambda) = I\lambda^2 + C\lambda + K, \tag{2.9}$$

and this monic symmetric second-order lambda-matrix will be the main subject of chapter III.

2.2 Statement of the Problem

Consider for a monent a single degree of freedom spring-mass-damper system with free vibration. This system is characterized by a homogeneous differential equation

$$\ddot{\chi}(t) + 2\zeta\omega_n\dot{\chi}(t) + \omega_n^2\chi(t) = 0, \tag{2.10}$$

where $\chi(t)$ denotes the displacement from the equilibrium position, ζ is known as viscous damping factor and ω_n is the natural frequency of the system. Substituting the solution $\chi(t) = \alpha\exp(\lambda t)$ into (2.10) yields the characteristic equation,

$$\lambda^2 + 2\zeta\omega_n\lambda + \omega_n^2 = 0,$$

with two roots, $\lambda_1 = -\zeta\omega_n + j\omega_n\sqrt{1-\zeta^2}$ and $\lambda_2 = -\zeta\omega_n - j\omega_n\sqrt{1-\zeta^2}$ where $j=\sqrt{-1}$. Hence, the solution of (2.10) can be written as

$$\chi(t) = \alpha_1\exp(\lambda_1 t) + \alpha_2\exp(\lambda_2 t), \tag{2.11}$$

where α_1 and α_2 are constants depending on the initial dis-

placement and velocity.

Now, from the above elementary solution of the homogeneous system (2.10) we can observe several characteristics of the system. First of all, the behavior of the system with non-zero initial conditions (disturbance) depends solely on the value of ζ, the viscous damping factor: When $\zeta>1$ the motion of χ decreases monotonically with increasing time. This is the overdamped case. When $0<\zeta<1$ the system is underdamped and it decays sinusoidally. In case $\zeta = 1$ the system is critically damped and is the limit between the regions. When $\zeta\leq 0$ the system becomes unstable. So, it explodes($\zeta<0$) or oscillates($\zeta=0$) under the presence of a small disturbance. Therefore, the stability of this single degree of freedom system is determined only by the sign of ζ; it is stable if $\zeta>0$, otherwise it is unstable.

Furthermore, the damping factor appears explicitly in the equation so that the designer can choose this quantity before testing and can predict the system response. This property is especially desirable when the design specifications are very stringent as in the case of the large space structure. Also, this arbitrary assignability of damping may be critical under the system parameter uncertainty, in which case the margin of stability plays a great role in the design of robust system.

Not surprisingly, none of these properties of the scalar

system belongs to the coupled multi-degree of freedom system as in the example of the coupled two-degree of freedom system shown below[35]:

$$\begin{bmatrix} 1 & 0 \\ 0 & 1 \end{bmatrix} \ddot{x}(t) + \begin{bmatrix} 8 & 0 \\ 0 & -2 \end{bmatrix} \dot{x}(t) + \begin{bmatrix} 24.8 & 14.5647 \\ 14.5647 & 9.2 \end{bmatrix} x(t) = 0 \tag{2.12}$$

The eigenvalues of this homogeneous system are $\lambda_{1,2} = -1 \pm j$ and $\lambda_{3,4} = -2 \pm 2j$, so that the system is asymptotically stable. Nevertheless, the damping matrix is not positive definite, which indicates a completely different property from that of the single degree of freedom system.

Concerned with the development of unique properties on a class of second-order dynamic systems and with damping assignment to the systems we define the problem as follows: i) to develop properties of a homogeneous second-order symmetric system

$$I\ddot{x}(t) + C\dot{x}(t) + Kx(t) = 0 \tag{2.13}$$

where $C \varepsilon R^{nxn}$ is symmetric and $K \varepsilon R^{nxn}$ is symmetric semi-positive definite, ii) to find a symmetric damping matrix $C \varepsilon R^{nxn}$ with given K such that (2.13) has some (or all) pre-assigned system eigenvalues, iii) to determine a collocated velocity only feedback control vector $f(t) \varepsilon R^{mx1}$ of $I\ddot{x}(t) + Kx(t) = B_0 f(t)$, so that the closed-loop system is identical to the system found in ii), where the output $y(t) \varepsilon R^{mx1}$ is defined by

$$y(t) = B_0^t \dot{x}(t), \quad B_0 \epsilon R^{nxm},$$

and control vector $f(t) \epsilon R^{mx1}$ by $f(t) = Gy(t)$ with a time-invariant gain matrix $G \epsilon R^{mxm}$.

In the second part of the work, we define the system equation in state space form:

$$\dot{\eta}(t) = A\eta(t) + Bf(t), \; B \epsilon R^{2nxm} \tag{2.14}$$

where[1]

$$\eta(t) \triangleq \begin{bmatrix} x(t) \\ \dot{x}(t) \end{bmatrix}$$

$$A \triangleq \begin{bmatrix} 0_n & I_n \\ -K & 0_n \end{bmatrix}.$$

We seek a control vector $f(t)$ which is a function of state vector; $f(t) = \Gamma\eta(t)$, $\Gamma \epsilon R^{mx2n}$ and minimizes a certain quadratic cost functional with constraints (2.14), but does not change all of the eigenvalues of the closed-loop system matrix except for a few modes selected for control.

---

[1] The notations 0_n and I_n (or 0_{nxm} and I_{nxm}) indicate nxn zero matrix and identity matrix (or nxm). These will be used throughout the work unless otherwise stated.

CHAPTER III

LAMBDA-MATRICES AND LINEAR SYSTEMS

3.1 Lambda-Matrices, Matrix Polynomials and Solvents

It was shown in the previous chapter that a second-order lambda-matrix,

$$A(\lambda) = I\lambda^2 + C\lambda + K \tag{3.1}$$

was obtained from the Laplace transformation of the system equations (2.8) with zero initial conditions. In this section definitions and theorems on the lambda-matrices, matrix polynomials and solvents, which are essential to the development and design of damping system, will be summarized for the continuity of the presentation. Proofs of the theorems and more rigorous treatment of the general case are given in Appendix A for lambda-matrices and in Appendix B for their solvents.

A latent root of a lambda-matrix $A(\lambda)$ is defined as a number $\lambda \varepsilon C$ such that det $A(\lambda)=0$ and a non-zero vector $y \varepsilon C^{nx1}$ is called a right latent vector corresponding to the latent root λ if $A(\lambda)y=0_{nx1}$ where det denotes the determinant. Similarly $z \varepsilon C^{nx1}$ is a left latent vector if $A^t(\lambda)z=0_{nx1}$.

As in the state space modeling of any matrix differential equation the lambda-matrix $A(\lambda)$ can be associated with

the block companion matrix $A_c \varepsilon R^{2nx2n}$ which has the following structure;

$$A_c = \begin{bmatrix} 0_n & I_n \\ -K & -C \end{bmatrix} .$$

It is shown in Appendix A that the 2n eigenvalues of A_c are the latent roots of $A(\lambda)$ counting multiplicity. Therefore, the terms "system eigenvalues" and "latent roots" of $A(\lambda)$ will be used interchangeably throughout this work.

Associated with the lambda-matrix (3.1) are two types of polynomials, a right matrix polynomial,

$$A_R(X) = X^2 + CX + K$$

and a left matrix polynomial,

$$A_L(X) = X^2 + XC + K$$

where $X \varepsilon C^{nxn}$. If $A_R(X_R)=0_{nxn}$ and $A_L(X_L)=0_{nxn}$ then X_R and X_L are called a right and a left solvent of $A(\lambda)$ respectively. The right(left) solvent is viewed as a matrix root of the right(left) matrix polynomial and the solvents retain complete information of latent roots and latent vectors. These characteristics of the matrix polynomials are explained in the following theorems.

<u>Theorem 3.1</u>. If $A(\lambda)$ has n linearly independent right latent vectors y_i, i=1,...,n corresponding to the latent

roots of $A(\lambda)$, λ_i, $i=1,\ldots,n$ (λ_i is not necessarily distinct) then $Y\Lambda Y^{-1}$ is a right solvent, where $Y = [y_1,\ldots,y_n]$ and $\Lambda = \mathrm{diag}(\lambda_1,\ldots,\lambda_n)$.

<u>Theorem 3.2</u>. If $A(\lambda)$ has n linearly independent left latent vectors z_i, $i=1,\ldots,n$ corresponding to the latent roots of $A(\lambda)$, λ_i, $i=1,\ldots,n$ (λ_i is not necessarily distinct) then $Z^{-1}\Lambda Z$ is a left solvent, where $Z = [z_1,\ldots,z_n]^t$ and $\Lambda = \mathrm{diag}(\lambda_1,\ldots,\lambda_n)$.

Proofs of Theorems 3.1 and 3.2 are included in Appendix B. Notice that these theorems are special cases of Corollaries B.5 and B.6 in the appendix, respectively.

<u>Theorem 3.3</u>. $A(\lambda)$ is divisible on the right(left) by $I\lambda-R$ ($I\lambda-L$) if and only if $R(L)$ is a right (left) solvent of $A(\lambda)$.

Proof: See Appendix C.

3.2. <u>Properties of $A(\lambda) = I\lambda^2 + C\lambda + K$</u>

Definitions and theorems in the previous section can be directly extended to n-th order lambda-matrices, whereas the properties developed in this section may be valid only on the second-order real symmetric system. However, these properties will serve as the foundations for the damping system synthesis which will be developed in the next chapter.

<u>Theorem 3.4</u>. Suppose all latent roots of $A(\lambda)$ exist in

distinct complex conjugate pairs. If a constant matrix $R \varepsilon C^{nxn}$ is a right solvent of $A(\lambda)$ and R has one latent root and corresponding latent vector out of each complex conjugate pair, then

i) R^* is a left solvent of $A(\lambda)$

ii) $A(\lambda) = (I\lambda - R^*)\ (I\lambda - R)$ (3.2)

iii) $R^*R = K$ (3.3)

iv) $R^* + R = -C$ (3.4)

where * indicates complex conjugate transpose.

Proof: i) According to Theorem 3.3 $A(\lambda)$ can be factored on the right by $(I\lambda - R)$, i.e.,

$$A(\lambda) = Q(\lambda)\ (I\lambda - R),$$

where $Q(\lambda)$ is a quotient lambda-matrix. Upon taking the complex conjugate transpose of $A(\lambda)$ it follows that

$$A^*(\lambda) = (I\lambda^* - R^*)\ Q^*(\lambda).$$

But, since C and K are real symmetric matrices, $A^*(\lambda)=A(\lambda^*)$. Therefore,

$$A(\lambda)^{-} = [A^*(\lambda)]^* = A^*(\lambda^*) = (I\lambda - R^*)Q^*(\lambda^*)$$

Thus, R^* is a left solvent of $A(\lambda)$ by Theorem 3.3.

ii) The factorization is obvious from the fact that R and R^* have a disjoint and exhaustive set of latent roots and $Q(\lambda)$ is of first order

iii and iv) Equating the coefficient matrices of (3.1) and (3.2) completes the proof. ∇∇∇

<u>Lemma 3.5</u>[58]. Suppose there exists a matrix U such that $U \triangleq RK^{-\frac{1}{2}}$. Then, under the same assumption of Theorem 3.4

i) U is unitary

ii) $$\prod_{i=1}^{n} |\lambda_i|^2 = \prod_{i=1}^{n} \omega_i^2 \tag{3.5}$$

where λ_i and ω_i^2 are eigenvalues of R and K, respectively and $|\lambda_i|$ denotes the absolute value of λ_i.

Proof: i)
$$\begin{aligned} UU^* &= RK^{-1}R^* \\ &= RR^{-1}(R^{-1})^*R^* \quad \{\text{from } (3.3)\} \\ &= I \end{aligned}$$
$$\begin{aligned} U^*U &= K^{-\frac{1}{2}}R^*RK^{-\frac{1}{2}} \\ &= K^{-\frac{1}{2}}KK^{-\frac{1}{2}} \quad \{\text{from } (3.3)\} \\ &= I \end{aligned}$$

ii) From i) we have $R=UK^{\frac{1}{2}}$. Taking the determinant and absolute value of this equation in order, we have

$$|\det R| = |\det U| \cdot |\det K^{\frac{1}{2}}|$$

or

$$\prod_{i=1}^{n} |\lambda_i| = \prod_{i=1}^{n} \omega_i,$$

where positive definiteness of K was utilized. ∇∇∇

This lemma establishes the relationship between natural frequencies and latent roots of the damped system and will

play an important role in assigning arbitrary damping, which will be shown in the next chapter.

<u>Theorem 3.6</u>. Let y_i, $i=1,\ldots,n$ be latent vectors of $A(\lambda)$ with $y_i^*y_i = 1$ and define $\beta_i = y_i^*Ky_i$. Then,

$$\omega_{min}^2 \leq \beta_i \leq \omega_{max}^2, \quad i=1,\ldots,n, \tag{3.6}$$

where ω_{min}^2 and ω_{max}^2 are the minimum and the maximum eigenvalues of K, respectively.

Proof: Let the Rayleigh's quotient $f(x) = \frac{x^*Kx}{x^*x}$, where $x \varepsilon C^{nx1}$. When x is replaced by eigenvectors of K the Rayleigh's principle provides the proof immediately. $\nabla\nabla\nabla$

<u>Lemma 3.7</u>. Let $\lambda_i \varepsilon C$ and $y_i \varepsilon C^{nx1}$, $i=1,\ldots,n$ be latent roots and a set of latent vectors of $A(\lambda)$ such that $y_i^*y_i=1$, and define $\alpha_i = \frac{1}{2}y_i^*Cy_i$ and $\beta_i = y_i^*Ky_i$, $i=1,\ldots,n$. Then, the system can be classified as follows:

i) When $\alpha_i>0$ and $\alpha_i^2 \geq \beta_i$

a) $\lambda_i = -\alpha_i \pm \sqrt{\alpha_i^2 - \beta_i}$,

b) $\lambda_i^+\lambda_i^- = \beta_i$, where $\lambda_i^+ = -\alpha_i + \sqrt{\alpha_i^2 - \beta_i}$, $\lambda_i^- = -\alpha_i - \sqrt{\alpha_i^2 - \beta_i}$ and

c) the i-th mode is overdamped.

ii) When $\alpha_i>0$ and $\alpha_i^2<\beta_i$

a) $\lambda_i = -\alpha_i \pm j\sqrt{\beta_i - \alpha_i^2}$

b) $|\lambda_i|^2 = \beta_i$, and

c) the i-th mode is underdamped.

iii) When $\alpha_i = 0$ the i-th mode is oscillating.

iv) When $\alpha_i < 0$ the i-th mode is unstable.

Proof: Since λ_i and y_i are latent roots and latent vectors of $A(\lambda)$ respectively, $(I\lambda_i^2 + C\lambda_i + K)y_i = 0$. After pre-multiplying y_i^* it follows that

$$\lambda_i^2 + 2\alpha_i\lambda_i + \beta_i = 0, \; i=1,\ldots,n.$$

Therefore, the latent roots can be expressed in terms of α_i and β_i, i.e., $\lambda_i = -\alpha_i \pm \sqrt{\alpha_i^2 - \beta_i}$, which provides the proof.

∇∇∇

Lemma 3.7 reveals that the positive definiteness of the damping matrix C is not a necessary condition for the stability of the system. In other words, even though the matrix C is indefinite it is still possible that there are some latent vectors y_i such that $y_i^*Cy_i = \alpha_i > 0$, $i=1,\ldots,n$, which is a necessary and sufficient condition for a stable system. The result obtained in (2.12) can now be explained by this theorem.

Also, Lemma 3.7 combined with Theorem 3.6 shows the feasible region of latent roots of a damped system in terms of natural frequencies of the undamped system. After a damping matrix C is added to the undamped system, $A'(\lambda) = I\lambda^2 + K$, the new latent roots are bounded by the

concentric circles with radii of maximum and minimum natural frequencies of the undamped system. This is illustrated in Fig. 1 and the system $A(\lambda) = I\lambda^2 + C\lambda + K$ is classified according to the asymptotic stability of the modes in Fig. 2. Furthermore, Lemma 3.5 indicates that the new latent roots are totally governed by the natural frequencies of the undamped system. However, their precise locations are affected by the new latent vectors which will be changed after damping is introduced. The shift of latent roots due to damping will be explained after Lemma 3.8 (classical normal mode) is presented.

<u>Lemma 3.8</u>. If the damping matrix C has the same modal matrix as the stiffness matrix K

$$\text{i)}\quad |\lambda_i|^2 = \omega_i^2 \ , \ i=1,\ldots,n \quad \text{when } \omega_i^2 \geq \alpha_i^2 \text{ and}$$
$$\text{ii)}\quad \lambda_i^+\lambda_i^- = \omega_i^2 \ , \ i=1,\ldots,n \quad \text{when } \omega_i^2 < \alpha_i^2,$$

where ω_i^2 and $2\alpha_i$, $i=1,\ldots,n$ are eigenvalues of K and C, respectively, and λ_i^+ and λ_i^- are the same as in Theorem 3.7.

Proof: By the hypothesis, let $y_i \varepsilon C^{nx1}$ in Lemma 3.7 be a normalized eigenvector of both matrices C and K. Then, $\beta_i = \omega_i^2$, $i=1,\ldots,n$. Substitution of ω_i^2 for β_i in Lemma 3.7 gives the result of Lemma 3.8 directly. ∇∇∇

From this lemma we see the movement of latent roots after damping is reinforced in case of the classical normal

ORIGINAL PAGE IS
OF POOR QUALITY

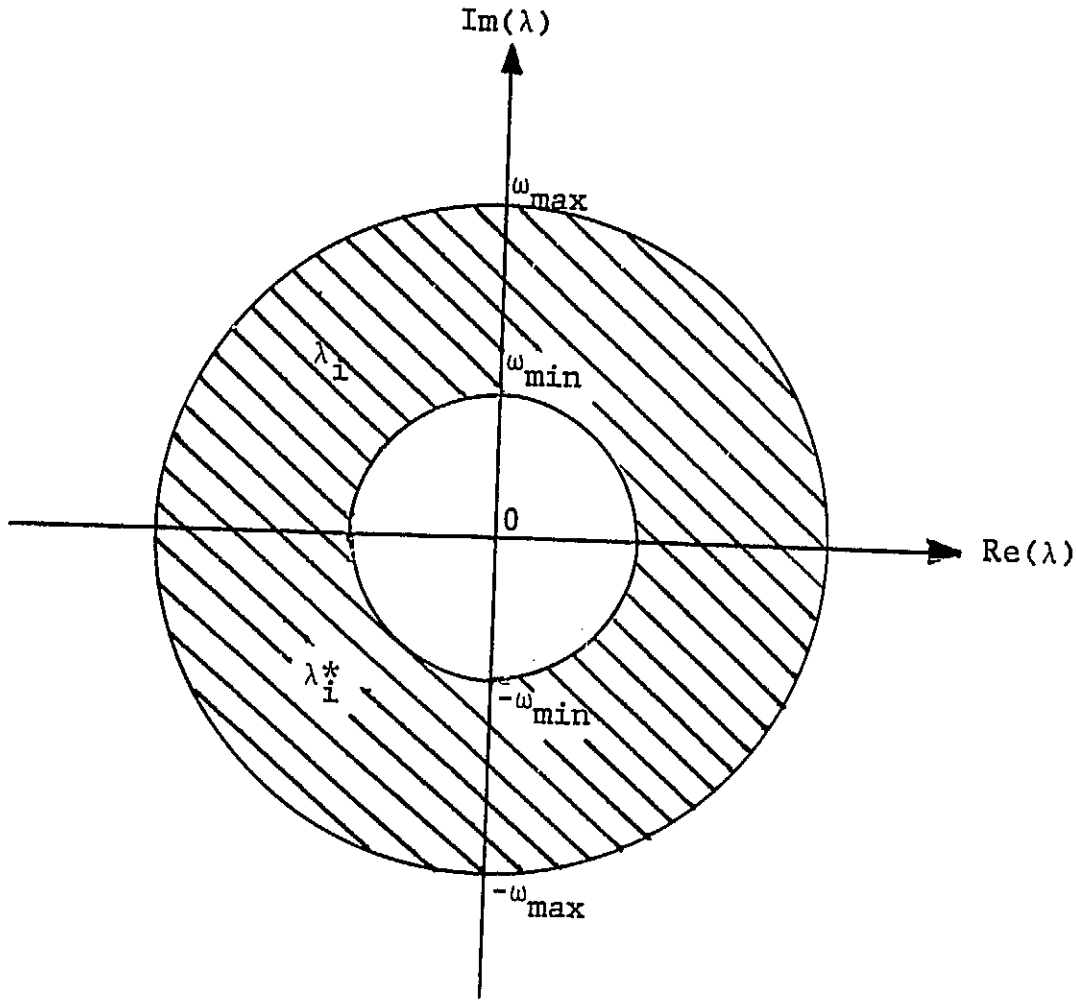

Figure 1: Feasible region of latent roots of the underdamped system $A(\lambda) = I\lambda^2 + C\lambda + K$.

ORIGINAL PAGE IS
OF POOR QUALITY

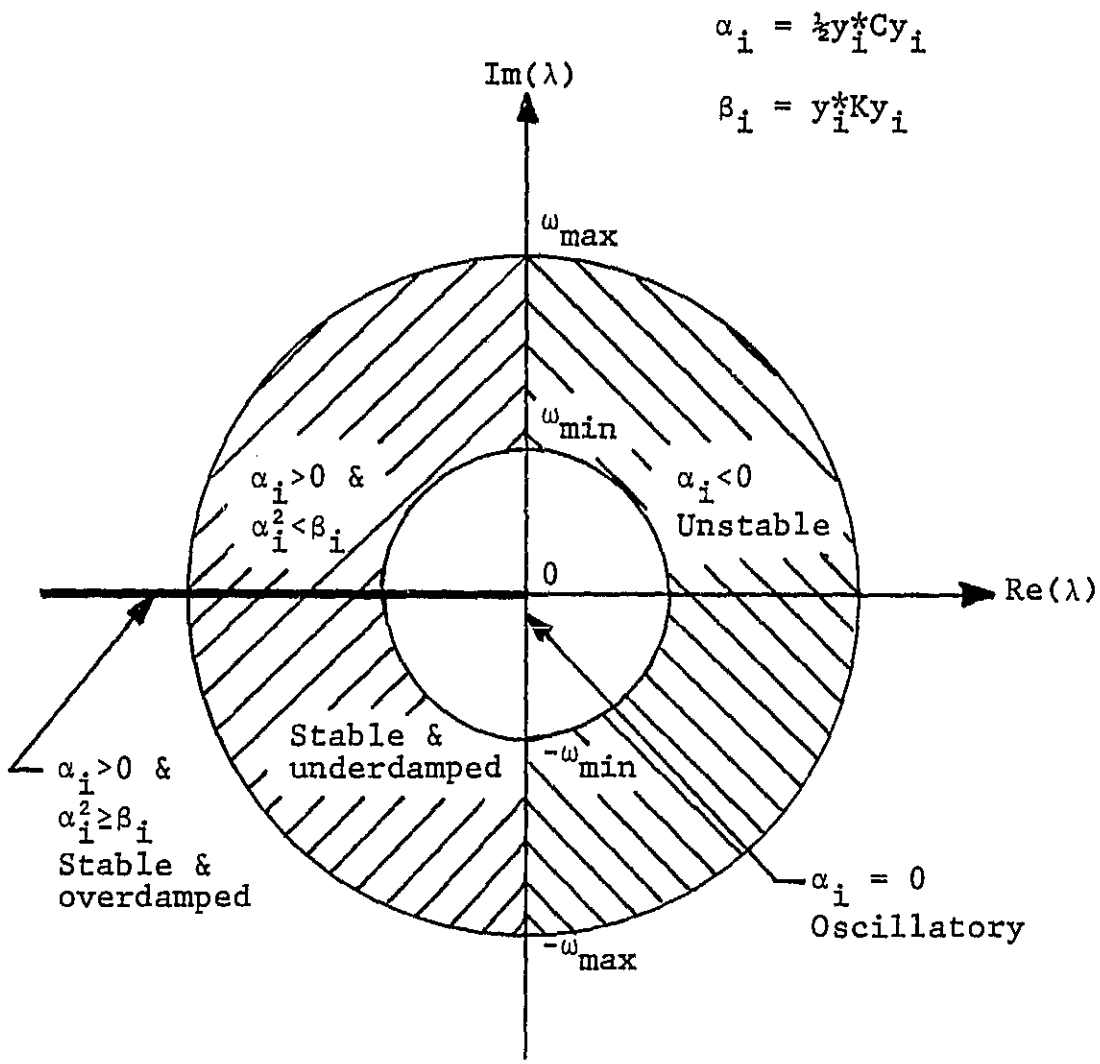

Figure 2: Classification of system $A(\lambda) = I\lambda^2 + C\lambda + K$ by the stability of the modes.

modes. In this case the absolute value or the modulus of λ_i is equal to the eigenvalue of K, whereas in the general case as seen in Lemma 3.5 multiplication of the moduli of λ_i is equal to the multiplication of the eigenvalues of K. The shifts of latent roots for these two cases have been illustrated in Figs. 3 and 4.

3.3 Bounds on Latent Roots of $A(\lambda) = I\lambda^2 + C\lambda + K$

Careful examinations of the solvents of the linear second-order system unveil some interesting relations between solvent and coefficient matrices of the system. Based on these relationships some bounds on the eigenvalues of the damped system will be developed in this section. We separate solvent $R \varepsilon C^{nxn}$ into the real part $R_R \varepsilon R^{nxn}$ and the imaginary part $R_I \varepsilon R^{nxn}$. Now, from Theorem 3.4 it can be shown that R_I is symmetric and the following relations hold for the system;

$$R_R^t R_R + R_I^2 = K \tag{3.7}$$

$$R_R^t R_I = R_I R_R \tag{3.8}$$

$$R_R^t + R_R = -C. \tag{3.9}$$

Before developing the bounds on the eigenvalues of the system we introduce theorems necessary for the development.

<u>Theorem 3.9</u>. Let $f(x) \triangleq \dfrac{x^t A x}{x^t x}$ for $x \varepsilon R^{nx1}$, $x \neq 0$ and

ORIGINAL PAGE IS
OF POOR QUALITY

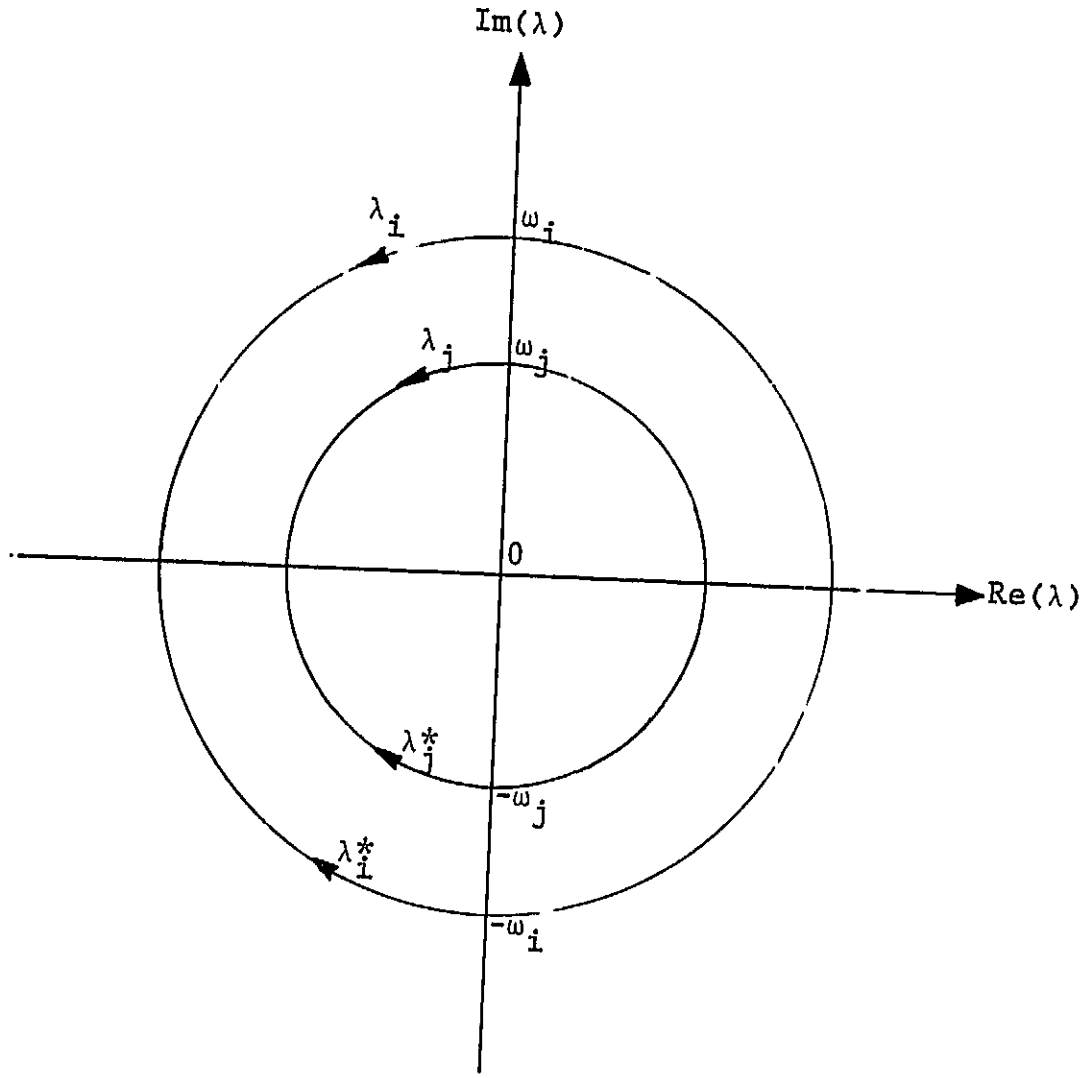

Figure 3: Shifts of latent roots after damping is assigned(Classical normal mode case - C and K have the same eigenvector matrix).

ORIGINAL PAGE IS
OF POOR QUALITY

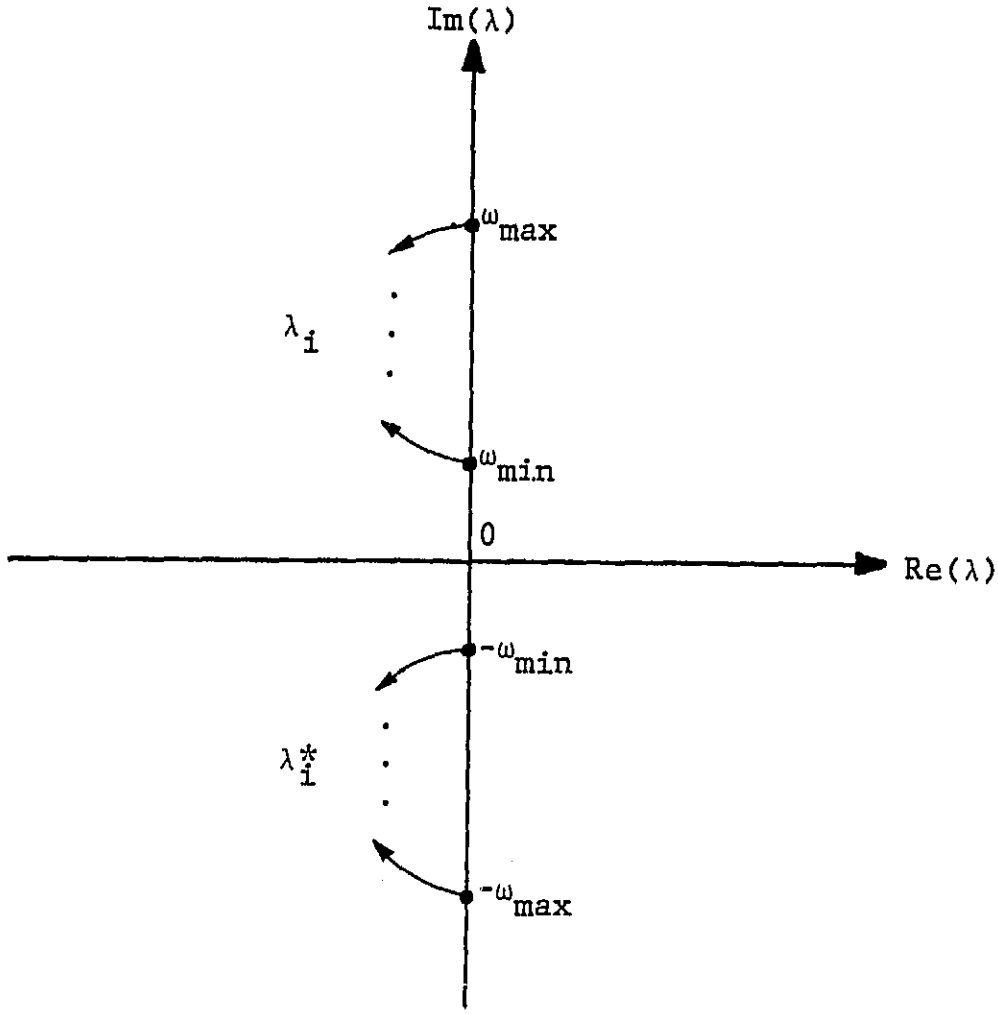

Figure 4: Shifts of latent roots after damping is assigned(general case). They must satisfy the equality $\prod_{i=1}^{n}\omega_i = \prod_{i=1}^{n}|\lambda_i|$.

$A \varepsilon R^{nxn}$. If $\hat{x} \varepsilon R^{nx1}$ is an eigenvector of $\frac{1}{2}(A + A^t)$, then $f(\hat{x})$ is the eigenvalue of $\frac{1}{2}(A + A^t)$ corresponding to $\hat{x}$.

Proof: Let $\hat{\lambda}$ and $\hat{x}$ be an eigenvalue and corresponding eigenvector of $\frac{1}{2}(A + A^t)$. Then,

$$\hat{\lambda} = \frac{\hat{x}^t(A + A^t)\hat{x}}{2\hat{x}^t\hat{x}} = \frac{1}{2}\left(\frac{\hat{x}^t A\hat{x}}{\hat{x}^t\hat{x}} + \frac{\hat{x}^t A^t\hat{x}}{\hat{x}^t\hat{x}} \right) = \frac{\hat{x}^t A\hat{x}}{\hat{x}^t\hat{x}} = f(\hat{x})$$

∇∇∇

<u>Corollary 3.10</u>. Let $f(x) = \frac{x^t R_R x}{x^t x}$ for $x \varepsilon R^{nx1}$, $x \neq 0$. If $\hat{x} \varepsilon R^{nx1}$ is an eigenvector of $(-C)$ then $f(\hat{x})$ is the eigenvalue of $(-\frac{1}{2}C)$ corresponding to $\hat{x}$, where C is the damping matrix of $A(\lambda)$.

<u>Theorem 3.11</u>[59]. Decomposing an arbitrary matrix A into $A = H_1 + jH_2$, where H_1 and H_2 are Hermitian[1]; then for every eigenvalue λ of A we have

$$\lambda_{min}(H_1) \leq \text{Re } \lambda(A) \leq \lambda_{max}(H_1)$$
$$\lambda_{min}(H_2) \leq \text{Im } \lambda(A) \leq \lambda_{max}(H_2)$$

where λ_{min}, λ_{max}, Re, and Im denote the minimum, the maximum eigenvalue, real part, and imaginary part respectively.

Proof: See Appendix D ∇∇∇

---

[1] Note that H_1 and H_2 are defined as $H_1 \triangleq \frac{1}{2}(A + A^*)$, $H_2 \triangleq \frac{1}{2j}(A - A^*)$ and that in general they are not real.

Lemma 3.12. Let $R \varepsilon C^{nxn}$ be a right solvent of $A(\lambda)$. Then the real parts of the eigenvalues of R have the following bounds:

$$\lambda_{min}(-\tfrac{1}{2}C) \leq \text{Re } \lambda(R) \leq \lambda_{max}(-\tfrac{1}{2}C)$$

where C is the damping matrix of $A(\lambda)$.

Proof: Since $H_1 \triangleq \tfrac{1}{2}(R + R^*) = -\tfrac{1}{2}C$ from (3.4) Theorem 3.11 provides the proof immediately. ∇∇∇

This lemma provides the bounds on the real parts of the eigenvalues of the damped system.

CHAPTER IV

SYNTHESIS OF DAMPED SYSTEM BY EIGENVALUE RELOCATION

4.1 Decoupling of the Stiffness Matrix

One of the major problems associated with the large scale system is that of high dimensionality. One possible approach to reducing the dimensionality is to decouple the system equations into subsystem equations where the collection of subsystems retains the eigenvalues of the original system. The most obvious method of decoupling the large system is to compute the eigenvectors of the system and then reduce the system equations to those of the Jordan form, a total decoupling. It is not necessary and probably not preferrable to decouple completely but to decouple only those modes that are to have additional damping. This partial decoupling has an advantage in that the feasible locations of new eigenvalues are more flexible than the classical normal mode case as shown in Figs. 3 and 4 of Chapter III. In this section the theoretical background for the partial decoupling will be developed.

Theorem 4.1. Let $D_i \epsilon C^{n_i x n_i}$, $i=1,\ldots,\ell$ consist of Jordan blocks of $K \epsilon R^{nxn}$ in such a way that no Jordan block is split among D_i's and $\sum_{i=1}^{\ell} n_i = n$. If Ψ_i^{-1}, $i=1,\ldots,\ell$ exist for arbit-

rarily chosen matrix $\Psi_i \varepsilon C^{n_i x n_i}$, K can be block diagonalized through a similarity transformation to $K_B \varepsilon R^{nxn}$ of the form,

$$K_B = B_{diag}(K_{B1},\ldots,K_{B\ell})$$

where $B_{diag}(\cdot)$ indicates a block diagonal matrix and $K_{Bi} = \Psi_i D_i \Psi_i^{-1}$, $i = 1,\ldots,\ell$.

Proof: Let Φ be an eigenvector matrix of K, $\Psi_B = B_{diag}(\Psi_1,\ldots,\Psi_\ell)$ and $D=B_{diag}(D_1,\ldots,D_\ell)$. Since Ψ_B^{-1} exists from the existence of Ψ_i^{-1}, $i=1,\ldots,\ell$ K_B can be expressed as $K_B = \Psi_B D \Psi_B^{-1}$. When the equality $D = \Phi^{-1}K\Phi$ is substituted, $K_B = TKT^{-1}$ is obtained where $T \triangleq \Psi_B \Phi^{-1}$. Since T^{-1} exists, the proof of the theorem is completed. ∇∇∇

The Ψ_i matrix in the above theorem is arbitrary and T can be computed directly. However, the decoupled block K_{Bi} is, in general, not symmetric. The following lemma shows a way to obtain symmetric blocks.

<u>Lemma 4.2</u>. Let $K \varepsilon R^{nxn}$ be symmetric and of simple structure and $D_i \varepsilon R^{n_i x n_i}$ be a diagonal matrix which consists of eigenvalues of i-th block with $\sum_{i=1}^{\ell} n_i = n$. Also let $\bar{\Phi}$ be an orthogonal eigenvector matrix of K. Then, K can be block diagonalized into $K_B \varepsilon R^{nxn}$ by a similarity transformation T such as $K_B = TKT^{-1}$, where $K_B = B_{diag}\ (\bar{\bar{\Phi}}_{11} D_1 \bar{\bar{\Phi}}_{11}^t,\ldots,\bar{\bar{\Phi}}_{\ell\ell} D_\ell \bar{\bar{\Phi}}_{\ell\ell}^t)$,

ORIGINAL PAGE IS
OF POOR QUALITY

$$T = \begin{bmatrix} \bar{\bar{\Phi}}_{11}\bar{\Phi}_{11}^t & \cdots & \bar{\bar{\Phi}}_{11}\bar{\Phi}_{\ell 1}^t \\ \vdots & & \vdots \\ \bar{\bar{\Phi}}_{\ell\ell}\bar{\Phi}_{1\ell}^t & \cdots & \bar{\bar{\Phi}}_{\ell\ell}\bar{\Phi}_{\ell\ell}^t \end{bmatrix},$$

$\bar{\Phi}$ is appropriately block partitioned as

$$\bar{\Phi} = \begin{bmatrix} \bar{\Phi}_{11} & \cdots & \bar{\Phi}_{1\ell} \\ \vdots & & \vdots \\ \bar{\Phi}_{\ell 1} & \cdots & \bar{\Phi}_{\ell\ell} \end{bmatrix},$$

and $\bar{\bar{\Phi}}_{ii}$, $i=1,\ldots,\ell$ are orthogonalized matrices of $\bar{\Phi}_{ii} \varepsilon R^{n_i x n_i}$.

Proof: Substituting $\bar{\bar{\Phi}}_{ii}$ for Ψ_i, $i=1,\ldots,\ell$ in Theorem 4.1 gives $K_{Bi} = \bar{\bar{\Phi}}_{ii} D_i \bar{\bar{\Phi}}_{ii}^t$ and

$$T = \Psi_B \bar{\Phi}^t = \begin{bmatrix} \bar{\bar{\Phi}}_{11}\bar{\Phi}_{11}^t & \cdots & \bar{\bar{\Phi}}_{11}\bar{\Phi}_{\ell 1}^t \\ \vdots & & \vdots \\ \bar{\bar{\Phi}}_{\ell\ell}\bar{\Phi}_{1\ell}^t & \cdots & \bar{\bar{\Phi}}_{\ell\ell}\bar{\Phi}_{\ell\ell}^t \end{bmatrix}. \qquad \nabla\nabla\nabla$$

If the interest is in assigning damping to a few of the low frequency modes, it is not necessary to compute all of the eigenvectors of K. Since most of the energy of the system is in the lower frequency modes, a reasonably controlled structure would require control of the first few modes with the exception of the rigid modes. Under these circumstances the following theorem is useful for the eigenvalue assignment:

<u>Theorem 4.3</u>. Let $E = B_{diag}(I_q, -I_{n-q})$, $S = \frac{1}{2}\Phi E \Phi^{-1}$ and

ORIGINAL PAGE IS
OF POOR QUALITY

$T = S + \frac{1}{2}E$ where $\Phi \varepsilon C^{nxn}$ is an eigenvector matrix of $K \varepsilon R^{nxn}$. Then, T will block diagonalize K into the form $K_B = B_{diag}(K_{B1}, K_{B2})$ under a similarity transformation; $K_B = TKT^{-1}$, where $K_{B1} \varepsilon R^{qxq}$ has eigenvalues corresponding to the first q eigenvectors of Φ and the rest of them belong to $K_{B2} \varepsilon R^{(n-q)x(n-q)}$.

Proof[60]: Let Φ be partitioned into four blocks

$$\Phi = \begin{bmatrix} \phi_{11} & \phi_{12} \\ \phi_{21} & \phi_{22} \end{bmatrix},$$

where $\phi_{11} \varepsilon C^{qxq}$ and $\phi_{22} \varepsilon C^{(n-q)x(n-q)}$. Then, with E as defined,

$$\begin{aligned} T &= S + \frac{1}{2}E \\ &= \frac{1}{2}[\Phi E + E\Phi]\Phi^{-1} \\ &= \begin{bmatrix} \phi_{11} & 0_{qx(n-q)} \\ 0_{(n-q)xq} & -\phi_{22} \end{bmatrix} \Phi^{-1}. \end{aligned}$$

Since $K = \Phi D \Phi^{-1}$,

$$\begin{aligned} K_B &= TKT^{-1} \\ &= B_{diag}(\phi_{11} D_1 \phi_{11}^{-1}, \phi_{22} D_2 \phi_{22}^{-1}) \end{aligned}$$

provided that no eigenvalue λ_i is common to both D_1 and D_2. when we denote $K_{Bi} = \phi_{ii} D_i \phi_{ii}^{-1}$, i=1,2, the proof is completed.

$\nabla\nabla\nabla$

ORIGINAL PAGE IS
OF POOR QUALITY

The similarity transformation in Theorem 4.3 can be obtained from the knowledge of the eigenvectors corresponding to those modes that are to be decoupled. Let P_D be the eigenprojector[1] of the q modes that are to be decoupled;

$$P_D = \Phi \begin{bmatrix} I_q & 0_{qx(n-q)} \\ 0_{(n-1)xq} & 0_{n-q} \end{bmatrix} \Phi^t$$

$$= \begin{bmatrix} \phi_{11}\phi_{11}^t & \phi_{11}\phi_{21}^t \\ \phi_{21}\phi_{11}^t & \phi_{21}\phi_{21}^t \end{bmatrix},$$

where it is assumed that Φ is normalized such that $\Phi^{-1}=\Phi^t$. The matrix S defined earlier is then

$$S = P_D - \tfrac{1}{2}I_n$$

and thus

$$T = P_D + \begin{bmatrix} 0_q & 0_{qx(n-q)} \\ 0_{(n-q)xq} & I_{n-q} \end{bmatrix}.$$

Since the matrix P_D contains only the first q eigenvectors of K, $[\phi_{11}^t \ \phi_{21}^t]^t$, T has been shown to be constructed from those q eigenvectors.

---

[1] The eigenprojector corresponding to the first q eigenvalues of a simple matrix K is defined as $P_D = \sum_{i=1}^{q} \phi_i \phi_i^t$ where ϕ_i is an i-th normalized eigenvector of K. For the general case and properties of the eigenprojectors see[51].

The computational procedure given above can be utilized to find K_{B1} which contains the desired eigenvalues that are to be moved away from the $j\omega$ axis of the undamped system. The computational technique to assign the eigenvalues will be discussed in the next section.

4.2 Computational Procedure for the Damping Matrix Determination

Assume that the system stiffness matrix K is block diagonalized into K_{B1} and K_{B2} and that K_{B1} has the eigenvalues of the system that are to be moved. The subsystem matrix K_{B1} can now be further decoupled and it will also be assumed that K_{B1} is block diagonalized to (2x2) matrices K_{Bj} with two distinct real eigenvalues[1]. The theory given previously can now be utilized to assign the eigenvalues of the low-order subsystems.

Let $\lambda_i \varepsilon C$ and $y_i \varepsilon C^{2x1}$ for $i = 1,2$ be the latent roots and a set of independent latent vectors of the desired subsystem with $y_i^* y_i = 1$. Define a new set of vectors $w_i \varepsilon C^{2x1}$ such that $w_i = \bar{\bar{\phi}}_{jj}^t y_i$ for $i = 1,2$ where $\bar{\bar{\phi}}_{jj}$ is a normalized eigenvector matrix of K_{Bj}. Let each component of w_i be expressed in polar form,

$$w_{ik} = a_{ik} \exp(j\theta_{ik}) , \; i,k = 1,2 \tag{4.1}$$

---

[1] Subsystem matrix K_{Bj} has real eigenvalues when the stiffness matrix K is real symmetric and of simple structure. This can be justified by Lemma 4.2.

ORIGINAL PAGE IS
OF POOR QUALITY

where a_{ik} and θ_{ik} are the modulus and argument of the complex number w_{ik}, respectively. Since $y_i^* y_i = 1$ then $w_i^* w_i = 1$ and

$$a_{11}^2 + a_{12}^2 = 1 \tag{4.2a}$$

$$a_{21}^2 + a_{22}^2 = 1. \tag{4.2b}$$

Furthermore,

$$w_{12}^* w_{11} + w_{11}^* w_{12} = 2a_{11}a_{12}\cos\Theta_1 \tag{4.3a}$$

$$w_{22}^* w_{21} + w_{21}^* w_{22} = 2a_{21}a_{22}\cos\Theta_2 \tag{4.3b}$$

where $\Theta_1 \triangleq \theta_{12} - \theta_{11}$ and $\Theta_2 \triangleq \theta_{21} - \theta_{22}$.

On the other hand, assuming $R_j \varepsilon C^{2x2}$ is a solvent of the damped subsystem with stiffness matrix K_{Bj}, from Theorem 3.4 we have

$$K_{Bj} = R_j^* R_j. \tag{4.4}$$

Now let $W = [w_1\ w_2]$, $Y = [y_1\ y_2]$, $\Lambda_k = \mathrm{diag}(\omega_1^2, \omega_2^2)$ and $\Lambda = \mathrm{diag}(\lambda_1, \lambda_2)$ where ω_i^2 and λ_i, i=1,2 are eigenvalues of K_{Bj} and latent roots of the damped subsystem. Then from the relations, $K_{Bj} = \bar{\bar{\phi}}_{jj}\Lambda_k\bar{\bar{\phi}}_{jj}^t$, $R_j = Y\Lambda Y^{-1}$ and $Y = \bar{\bar{\phi}}_{jj}W$ we have

$$W^*\Lambda_K W = \Lambda^* W^* W \Lambda \ .$$

This matrix equation is then written as follows:

$$\mathrm{LHS} = \begin{bmatrix} \omega_1^2 a_{11}^2 + \omega_2^2 a_{12}^2 & \omega_1^2 w_{11}^* w_{21} + \omega_2^2 w_{12}^* w_{22} \\ \omega_1^2 w_{21}^* w_{11} + \omega_2^2 w_{22}^* w_{12} & \omega_1^2 a_{21}^2 + \omega_2^2 a_{22}^2 \end{bmatrix}$$

ORIGINAL PAGE IS
OF POOR QUALITY

$$\text{RHS} = \begin{bmatrix} \lambda_1^*\lambda_1 & \lambda_1^*\lambda_2(w_{11}^*w_{21} + w_{12}^*w_{22}) \\ \lambda_2^*\lambda_1(w_{21}^*w_{11} + w_{22}^*w_{12}) & \lambda_2^*\lambda_2 \end{bmatrix} \tag{4.5}$$

Equating elements of (4.5) and noting that the matrix is symmetric we have three equations:

$$\omega_1^2 a_{11}^2 + \omega_2^2 a_{12}^2 = |\lambda_1|^2 \tag{4.6a}$$

$$\omega_1^2 a_{21}^2 + \omega_2^2 a_{22}^2 = |\lambda_2|^2 \tag{4.6b}$$

$$w_{11}^* w_{21}(\lambda_1^*\lambda_2 - \omega_1^2) = w_{12}^* w_{22}(\omega_2^2 - \lambda_1^*\lambda_2). \tag{4.6c}$$

Since $w_{12}^* w_{22} \neq 0$[1] a complex number s can be defined from (4.6c) as

$$s \triangleq \frac{w_{11}^* w_{21}}{w_{12}^* w_{22}} = \frac{\omega_2^2 - \lambda_1^*\lambda_2}{\lambda_1^*\lambda_2 - \omega_1^2}. \tag{4.7}$$

The number s can also be obtained from (4.1) as

---

[1] By the independency of w_1 and w_2 both w_{12} and w_{22} (or w_{11} and w_{21}) cannot be zeroes at the same time. If either w_{12} or w_{22} is zero then $w_{11}w_{21} = 0$ except in two cases, i.e., $W = \begin{bmatrix} 1 & 0 \\ 0 & 1 \end{bmatrix}$ and $W = \begin{bmatrix} 0 & 1 \\ 1 & 0 \end{bmatrix}$. It now follows from $W = \bar{\bar{\phi}}_{jj}^t Y$ that $Y = [\phi_1 \ \phi_2]$ and $Y = [\phi_2 \ \ \phi_1]$, respectively. These are the classical normal mode cases.

ORIGINAL PAGE IS
OF POOR QUALITY

$$s = \frac{a_{11}a_{21}}{a_{12}a_{22}} (\cos\Theta + j\sin\Theta) \tag{4.8a}$$

where $\Theta = \Theta_1 + \Theta_2 = \tan^{-1}(\text{Im. } s/\text{Re } s)$. (4.8b)

Theorem 3.4 also gives

$$C_{Bj} = R_j^* + R_j \tag{4.9}$$

and by a similar substitution as in (4.5)

$$\bar{\bar{\phi}}_{jj}^t C_{Bj} \bar{\bar{\phi}}_{jj} = -(W^*)^{-1}\Lambda^* W^* - W\Lambda W^{-1} \tag{4.10}$$

or with $\hat{C}_{Bj} \triangleq \bar{\bar{\phi}}_{jj}^t C_{Bj} \bar{\bar{\phi}}_{jj}$

$$\Lambda^* W^* W + W^* W \Lambda = -W^* \hat{C}_{Bj} W. \tag{4.11}$$

Substituting the previously defined variables into (4.11) we have a set of nonlinear equations:

$$\begin{bmatrix} a_{11}^2 & 2a_{11}a_{12}\cos\Theta_1 & a_{12}^2 \\ a_{21}^2 & 2a_{21}a_{22}\cos\Theta_2 & a_{22}^2 \\ \text{Re } s & \frac{a_{21}}{a_{22}}\cos\Theta_2 + \frac{a_{11}}{a_{12}}\cos\Theta_1 & 1 \\ \text{Im } s & \frac{a_{21}}{a_{22}}\sin\Theta_2 + \frac{a_{11}}{a_{12}}\sin\Theta_1 & 0 \end{bmatrix} \begin{bmatrix} \hat{C}_{11} \\ \hat{C}_{12} \\ \hat{C}_{22} \end{bmatrix} = - \begin{bmatrix} 2\sigma_1 \\ 2\sigma_2 \\ \text{Re } t \\ \text{Im } t \end{bmatrix} \tag{4.12}$$

where $\hat{C}_{ij}$, $i,j=1,2$ are elements of $\hat{C}_{Bj}$, σ_i, $i=1,2$ are real parts of λ_i and $t \triangleq (\lambda_1^* + \lambda_2)(s + 1)$.

ORIGINAL PAGE IS
OF POOR QUALITY

The computational procedures for the subsystem can be summarized as follows:

1) Compute the eigenvalues ω_i^2 and normalized eigenvectors ϕ_i, $i = 1,2$ of K_{Bj}.

2) Select new eigenvalues λ_i and compute $\hat{\omega}_i^2 = |\lambda_i|^2$, $i = 1,2$.

3) Solve the set of equations for a_{ij}^2, $i,j = 1,2$:

$$\begin{bmatrix} 1 & 1 \\ \omega_1^2 & \omega_2^2 \end{bmatrix} \begin{bmatrix} a_{11}^2 & a_{21}^2 \\ a_{12}^2 & a_{22}^2 \end{bmatrix} = \begin{bmatrix} 1 & 1 \\ \hat{\omega}_1^2 & \hat{\omega}_2^2 \end{bmatrix}$$

4) Compute Re s and Im s from (4.7)

5) Compute Θ from (4.8b)

6) Solve the set of nonlinear equations given in (4.12) for the coefficents $\hat{C}_{ij}$, $i,j = 1,2$.

7) Compute the damping matrix $C_{Bj} = \bar{\bar{\phi}}_{jj}\hat{C}_{Bj}\bar{\bar{\phi}}_{jj}^t$

The subsystem is then transformed back with the other subsystems to obtain the damped system equation.

4.3 Velocity Feedback Control Scheme

In the two previous sections it was shown that the stiffness matrix K can be decoupled into block diagonal matrices, $K_{Bj} = \bar{\bar{\phi}}_{jj}D_j\bar{\bar{\phi}}_{jj}^t$, $j = 1,\ldots,\ell$ through orthogonal similarity transformation $T = \Psi_B\bar{\Phi}^t$ (see Lemma 4.2) and that sufficient damping can be assigned to each subsystem by

shifting system eigenvalues. In this section, damping assignment will be realized through a velocity only feedback control. For simplicity of the implementation, collocated control (in which the actuators and sensors are placed together) will be employed.

Neglecting the low natural damping the large flexible system of which the vibration is to be controlled is expressed as

$$\ddot{x} + Kx = B_0 f$$

$$y = B_0^t \dot{x} \tag{4.13}$$

where $x \varepsilon R^{nx1}$, $f \varepsilon R^{mx1}$, $y \varepsilon R^{mx1}$ and $B_0 \varepsilon R^{nxm}$ are generalized displacement, control input, output, and actuator matrix, respectively[1]. Notice that the form of sensor matrix B_0^t of the collocated control. With the state vector η defined by

$$\eta \triangleq \begin{bmatrix} x \\ \dot{x} \end{bmatrix} \tag{4.14}$$

the system described in (4.13) is now written in the state space form as

$$\dot{\eta} = \begin{bmatrix} 0_n & I_n \\ -K & 0_n \end{bmatrix} \eta + \begin{bmatrix} 0_{nxm} \\ B_0 \end{bmatrix} f \tag{4.15}$$

$$y = \begin{bmatrix} 0_{mxn} & B_0^t \end{bmatrix} \eta .$$

[1] The notation of vector y is different from that in Chapters II and III. This notation will be used in this chapter only.

Let $G \epsilon R^{mxm}$ be the time-invariant velocity feedback gain matrix, then this control law will be

$$f = G\begin{bmatrix} 0_{mxn} & B_0^t \end{bmatrix} \eta$$

Therefore, the closed loop system is described as

$$\dot{\eta} = \begin{bmatrix} 0_n & I_n \\ -K & B_0 G B_0^t \end{bmatrix} \eta \tag{4.16}$$

and its eigenvalues are identical to the latent roots of the corresponding lambda-matrix,

$$A(\lambda) = I\lambda^2 + C\lambda + K$$

where $C = -B_0 G B_0^t$. (4.17)

Thus the remaining problem is to decompose C into $B_0 G B_0^t$, so that resulting feedback gain matrix G together with a sensor matrix B_0 and an actuator matrix B_0^t will provide the system with sufficient damping by means of shifting system eigenvalues to pre-assigned locations.

We will now show this prodecure in a constructive way. Suppose that the stiffness matrix is decoupled into three subsystems K_{B1}, K_{B2} and K_{B3} by Lemma 4.2. It is also assumed that K_{B1} and K_{B2} are (2x2) subsystems whose modes are to be damped and K_{B3} has the rest of the modes which will remain unchanged. Then, according to Lemma 4.2

ORIGINAL PAGE IS
OF POOR QUALITY

$$K_B = TKT^{-1}$$

where

$$K_B = \begin{bmatrix} \bar{\bar{\phi}}_{11} D_1 \bar{\bar{\phi}}_{11}^t & 0 & 0 \\ 0 & \bar{\bar{\phi}}_{22} D_2 \bar{\bar{\phi}}_{22}^t & 0 \\ 0 & 0 & \bar{\bar{\phi}}_{33} D_3 \bar{\bar{\phi}}_{33}^t \end{bmatrix}$$

and

$$T = \begin{bmatrix} \bar{\bar{\phi}}_{11} & 0 & 0 \\ 0 & \bar{\bar{\phi}}_{22} & 0 \\ 0 & 0 & \bar{\bar{\phi}}_{33} \end{bmatrix} \bar{\phi}^t. \tag{4.18}$$

On the other hand, for subsystems K_{Bj}, $j = 1,2$ damping matrices C_{Bj}, $j = 1,2$ could be determined by the procedures described in Section 4.2, and they are assumed to be written as

$$C_{Bj} = \bar{\bar{\phi}}_{jj} \hat{C}_{Bj} \bar{\bar{\phi}}_{jj}^t \ , \quad j = 1, 2. \tag{4.19}$$

Therefore, in the generalized coordinate system the damping matrix will be

$$C = T^{-1} \begin{bmatrix} C_{B1} & 0 & 0 \\ 0 & C_{B2} & 0 \\ 0 & 0 & 0 \end{bmatrix} T. \tag{4.20}$$

ORIGINAL PAGE IS
OF POOR QUALITY

Substituting (4.18) and (4.19) into (4.20) we have

$$C = \begin{bmatrix} \bar{\phi}_{11} & \bar{\phi}_{12} \\ \bar{\phi}_{21} & \bar{\phi}_{22} \\ \bar{\phi}_{31} & \bar{\phi}_{32} \end{bmatrix} \begin{bmatrix} \hat{C}_{B1} & 0 \\ 0 & \hat{C}_{B2} \end{bmatrix} \begin{bmatrix} \bar{\phi}^t_{11} & \bar{\phi}^t_{21} & \bar{\phi}^t_{31} \\ \bar{\phi}^t_{12} & \bar{\phi}^t_{22} & \bar{\phi}^t_{32} \end{bmatrix} \quad (4.21)$$

Thus, by comparing (4.17) with (4.21), a solution to the collocated velocity feedback control problem is as follows:

Gain matrix; $G = B_{diag}(-\hat{C}_{B1}, -\hat{C}_{B2}, \ldots, -\hat{C}_{Bk})$

Actuator matrix; $B_0 = [\phi_1 \ \phi_2 \ \cdots \ \phi_{2k}]$

Sensor matrix; B_0^t

where k is the number of (2x2) subsystems to which damping is to be assigned and ϕ_i is a normalized eigenvector corresponding to the i-th mode.

4.4 Illustrative Example

Example 1:

The example chosen for computational purposes has a mass matrix I and a stiffness matrix K

$$K = \begin{bmatrix} 9 & -5 & & & & \\ -5 & 11 & -6 & & & \\ & -6 & 13 & -7 & & \\ & & -7 & 15 & -8 & \\ & & & -8 & 17 & -9 \\ & & & & -9 & 19 \end{bmatrix}$$

which has natural frequencies given in Table 1. The zeroes of the matrix K have been deleted for the sake of brevity. The two lowest modes are to be damped with the real parts of the damped eigenvalues at -0.5 and -1.0.

Table 1. Natural Frequencies ω_i in Example 1

Mode i	ω_i
1	1.135
2	2.215
3	3.175
4	3.980
5	4.687
6	5.470

Through the computational procedures given in the previous section the velocity only feedback gain matrix G and the force actuator matrix B_0 (the sensor matrix B_0^t assuming the sensors and the actuators are collocated) were obtained as follows:

$$G = \begin{bmatrix} 1.053 & -1.099 \\ -1.099 & 1.949 \end{bmatrix}$$

$$B_0 = \begin{bmatrix} 0.3216 & 0.5528 \\ 0.4960 & 0.4527 \\ 0.5350 & -0.0008 \\ 0.4700 & -0.3889 \\ 0.3376 & -0.4901 \\ 0.1715 & -0.3130 \end{bmatrix}$$

The damping matrix C and the eigenvalues of the closed-loop system were computed and listed in Table 2 and Table 3, respectively. The eigenvalues of the closed-loop system show that the two lowest modes get the pre-assigned amount of damping exactly while the rest of the modes remain unchanged.

Table 2. The Computed Damping Matrix C

0.3134	0.1938	-0.1451	-0.4086	-0.4461	-0.2730
0.1938	0.1641	0.0121	-0.1203	-0.1575	-0.1016
-0.1451	0.0121	0.3015	0.4939	0.4790	0.2811
-0.4086	-0.1203	0.4939	0.9291	0.9360	0.5571
-0.4461	-0.1575	0.4790	0.9360	0.9519	0.5685
-0.2730	-0.1016	0.2811	0.5571	0.5685	0.3399

ORIGINAL PAGE IS
OF POOR QUALITY

Table 3. Eigenvalues of the Closed-Loop System (Example 1)

Mode i	Real Part[1]	Imaginary Part
1	-1.0000	±1.183
2	-0.4999	±1.543
3	0	±3.175
4	0	±3.980
5	0	±4.687
6	0	±5.470

[1] Zeroes are less than 10^{-12} in double precision arithmetic of the AS/9000N system.

Example 2:

The second example has a stiffness matrix of

$$K_{(20x20)} = 100x \begin{bmatrix} 5 & -4 & 1 & 0 & \cdots & \cdots & \cdots & 0 \\ -4 & 6 & \ddots & \ddots & \ddots & & & \vdots \\ 1 & \ddots & \ddots & \ddots & \ddots & \ddots & & \vdots \\ 0 & \ddots & \ddots & \ddots & \ddots & \ddots & \ddots & 0 \\ \vdots & & \ddots & \ddots & \ddots & \ddots & \ddots & 1 \\ \vdots & & & \ddots & \ddots & \ddots & 6 & -4 \\ 0 & \cdots & \cdots & \cdots & 0 & 1 & -4 & 5 \end{bmatrix}$$

and natural frequencies given in Table 4. The six lowest modes were damped by shifting the real parts of the eigenvalues to -0.5 for each mode.

ORIGINAL PAGE IS
OF POOR QUALITY

Table 4. Natural Frequencies ω_i in Example 2

Mode i	ω_i
1	0.2233
2	0.8885
3	1.981
4	3.475
5	5.339
6	7.530
7	10.00
8	12.69
9	15.55
10	18.51
11	21.49
12	24.45
13	27.31
14	30.00
15	32.47
16	34.66
17	36.52
18	38.02
19	39.11
20	39.78

The velocity only feedback gain matrix G has been turned out to be;

$$G = B_{diag}(G_1, G_2, G_3)$$

where

$$G_1 = \begin{bmatrix} -0.1214 & -3.1297 \\ -3.1297 & -1.8767 \end{bmatrix}$$

$$G_2 = \begin{bmatrix} -0.2903 & -4.3778 \\ -4.3778 & -1.7087 \end{bmatrix}$$

$$G_3 = \begin{bmatrix} -0.4622 & 5.3003 \\ 5.3003 & -1.5374 \end{bmatrix}$$

The computer output of the actuator matrix B_0 and the damping matrix C is given in Appendix E. And the eigenvalues of the closed-loop system shown in Table 5 indicate that the six lowest modes were damped but the rest of them remained undamped as predicted.

Table 5. Eigenvalues of the Closed-loop System (Example 2)

Mode i	Real Part[1]	Imaginary Part
1	-0.5006	±0.6675
2	-0.4984	±0.7856
3	-0.5007	±1.936
4	-0.4988	±2.319
5	-0.5000	±3.123
6	-0.4998	±4.690
7	0	±10.00
8	0	±12.69
9	0	±15.55
10	0	±18.51
11	0	±21.49
12	0	±24.45
13	0	±27.31
14	0	±30.00
15	0	±32.47
16	0	±34.66
17	0	±36.52
18	0	±38.02
19	0	±39.11
20	0	±39.78

[1] Zeroes are less than 10^{-12} in double precision arithmetic of the AS/9000N system.

CHAPTER V

OPTIMAL CONTROL OF SELECTED MODES

5.1 Introduction

Consider the state equation, defined in (2.14), for a plant

$$\dot{\eta}(t) = A\eta(t) + Bf(t) \tag{5.1}$$

where $A \varepsilon R^{2nx2n}$ is the system matrix, $B \varepsilon R^{2nxm}$ is the actuator matrix, $\eta(t) \varepsilon R^{2nx1}$ is the state vector and $f(t) \varepsilon R^{mx1}$ is the control force vector. Let J be the associated scalar cost functional with

$$J(\eta,f,t) = \tfrac{1}{2}\eta^t(\infty)H\eta(\infty)+\tfrac{1}{2}\int_0^\infty [\eta^t(t)Q_1\eta(t)+f^t(t)Q_2f(t)]dt. \tag{5.2}$$

The Hamiltonian for the system is

$$H(\eta,f,r,t) = \tfrac{1}{2}\eta^t(t)Q_1\eta(t)+\tfrac{1}{2}f^t(t)Q_2f(t)+r^t(t)[A\eta(t)+Bf(t)] \tag{5.3}$$

from which it follows that $\eta(t)$, $r(t)$ and $f(t)$ must satisfy the equations:

$$\dot{\eta}(t) = A\eta(t) + Bf(t) \tag{5.1}$$

$$\dot{r}(t) = -Q_1\eta(t) - A^t r(t) \tag{5.4}$$

$$0 = Q_2 f(t) + B^t r(t). \tag{5.5}$$

The desired control for minimizing the cost function is [10,P.211]

$$f(t) = -Q_2^{-1}B^t r(t) \tag{5.6}$$

where it will be assumed that

$$r(t) = P\eta(t). \tag{5.7}$$

Differentiating (5.7) with respect to t and using (5.1) and (5.4) we obtain the algebraic Riccati equation,

$$Q_1 + A^tP + PA - PBQ_2^{-1}B^tP = 0 \tag{5.8}$$

for P. Substituting P into (5.7) and the resulting equation into (5.6) gives the control

$$f(t) = -Q_2^{-1}B^tP\eta(t). \tag{5.9}$$

This control will give the closed-loop matrix

$$\hat{A} = A - BQ_2^{-1}B^tP. \tag{5.10}$$

It is usually assumed that H and Q_1 are symmetric positive semi-definite matrices and Q_2 is symmetric positive definite. The Riccati matrix obtained from (5.8) will also be symmetric and positive definite. The matrices H, Q_1 and Q_2 are weighting matrices chosen to fix the cost penalty for the initial conditions, the displacements and the control efforts, respectively.

This optimal control procedure works quite well when the number of modes in the system is not large but the computational load for several hundred modes makes this type of control impractical if time varying gain is used. Even when a constant gain is used, the computation of gain is not a trivial task.

There have been numerous papers about applying optimal control theory to the large space structure with the development based on reduced-order models, see [9,12,13,31]. The computational load can be reduced significantly by this approach but the reduced-order model must be carefully chosen if mode spillover is to be avoided.

The work in this chapter will take an entirely different direction. The computational load for the procedure is reasonable and the mode spillover problem can be eliminated. The spectral factorization algorithm will be used to decouple the selected modes from other modes of the structure. The optimal control theory will then be used to construct the feedback for the selected modes. The uncontrolled modes are uncoupled from the control modes and the possibility of mode spillover is eliminated.

5.2 Mode Decoupling of the State Matrix

In this section a method is presented that decouples some of the modes from the remaining ones so that the optimal control strategy can be carried out on a lower-order system.

This is an extension of the method given in Section 4.1, which decouples the stiffness matrix K.

Consider the undamped system matrix A as defined in (2.14) with C = 0 such that

$$A = \begin{bmatrix} 0_n & I_n \\ -K & 0_n \end{bmatrix} \tag{5.11}$$

where $K \varepsilon R^{nxn}$ is positive definite. The eigenvalues of K are given by ω_i^2 where $\pm j\omega_i$ are eigenvalues of A. This suggests that the spectral decomposition of A can be obtained from considering K rather than A.

Suppose, as shown in Theorem 4.1, that there exists a similarity transformation T_k (denoted by T in Theorem 4.1) such that

$$T_k K T_k^{-1} = \begin{bmatrix} K_{B1} & 0_{qx(n-q)} \\ 0_{(n-q)xq} & K_{B2} \end{bmatrix} \tag{5.12}$$

where $K_{B1} \varepsilon R^{qxq}$ has q eigenvalues and $K_{B2} \varepsilon R^{(n-q)x(n-q)}$ has (n-q) eigenvalues of K. If such a matrix exists, then K_{B1} and K_{B2} give the spectral decomposition of K. To find T_k, eigenvectors of K must be found (see Lemma 4.2) or the sign algorithm [57] can be used to generate T_k. The eigenvector procedure will probably be the most efficient for large systems so the procedure will be based on the method given

ORIGINAL PAGE IS
OF POOR QUALITY

in Lemma 4.2.

Let $\bar{\Phi}$ denote the orthogonalized eigenvector matrix of K and be partitioned with appropriate dimensions as in Lemma 4.2,

$$\bar{\Phi} = \begin{bmatrix} \Phi_{11} & \Phi_{12} \\ \Phi_{21} & \Phi_{22} \end{bmatrix}$$

If we further denote orthogonalized matrices of Φ_{ii} by $\bar{\Phi}_{ii}$, i=1,2, then according to the lemma, K can be block diagonalized to (5.12) by a similarity transformation $T_K \varepsilon R^{nxn}$ where

$$T_K \triangleq \begin{bmatrix} T_{K11} & T_{K12} \\ T_{K21} & T_{K22} \end{bmatrix} \triangleq \begin{bmatrix} \bar{\Phi}_{11}\Phi_{11}^t & \bar{\Phi}_{11}\Phi_{21}^t \\ \bar{\Phi}_{22}\Phi_{12}^t & \bar{\Phi}_{22}\Phi_{22}^t \end{bmatrix} \qquad (5.13)$$

and

$$K_{Bi} = \bar{\Phi}_{ii} D_i \bar{\Phi}_{ii}^t \ , \quad i= 1,2.$$

Thus far, the spectral decomposition of K has been carried out but the system matrix (5.11) must be considered because this is the matrix of concern. Let T_A be a new transformation matrix with

$$T_A = \begin{bmatrix} T_K & 0_n \\ 0_n & T_K \end{bmatrix}, \qquad (5.14)$$

ORIGINAL PAGE IS
OF POOR QUALITY

then,

$$T_A A T_A^{-1} = \begin{bmatrix} 0_n & I_n \\ -T_K K T_K^{-1} & 0_n \end{bmatrix} . \tag{5.15}$$

This gives a new system matrix with K_B in the lower left corner of the matrix, but the matrix (5.15) is not block diagonalized. To block diagonalize $T_A A T_A^{-1}$, construct a row-column interchange matrix F, where

$$F = \left[\begin{array}{c|cc|c} I_q & & & \\ \hline & & I_q & \\ & I_{n-q} & & \\ \hline & & & I_{n-q} \end{array}\right] .$$

The blocks of zeroes are deleted in the matrix F for simplicity. The block diagonal form A_B can then be found by

$$A_B = F T_A A T_A^{-1} F^{-1} = T A T^{-1} , \tag{5.16}$$

where $T \triangleq F T_A$ and

$$A_B = \left[\begin{array}{cc|cc} 0_q & I_q & & \\ -K_{B1} & 0_q & \multicolumn{2}{c}{0_{2q}} \\ \hline & & 0_{n-q} & I_{n-q} \\ \multicolumn{2}{c|}{0_{2n-2q}} & -K_{B2} & 0_{n-q} \end{array}\right] .$$

ORIGINAL PAGE IS
OF POOR QUALITY

It can be shown from (5.13) that T is orthogonal and, after simple arithmetic, T is written as

$$T = \begin{array}{c} \begin{bmatrix} T_{K11} & T_{K12} & 0 & 0 \\ 0 & 0 & T_{K11} & T_{K12} \\ T_{K21} & T_{K22} & 0 & 0 \\ 0 & 0 & T_{K21} & T_{K22} \end{bmatrix} \begin{array}{l} \}q \\ \}q \\ \}n-q \\ \}n-q \end{array} \\ \begin{array}{cccc} \underbrace{}_{q} & \underbrace{}_{n-q} & \underbrace{}_{q} & \underbrace{}_{n-q} \end{array} \end{array}, \qquad (5.17)$$

where T_{Kij}, i,j=1,2 is block partitioned matrices of T_K as defined in (5.13).

The spectral decomposition process will modify the state vector $\eta(t)$ as shown below. Remember that the state vector $\eta(t)$ was defined in chapter IV as

$$\eta(t) = \begin{bmatrix} x(t) \\ \dot{x}(t) \end{bmatrix}, \qquad (4.14)$$

where x(t) is the generalized displacement vector. Let q(t) be defined as the transformed vector,

$$q(t) \triangleq T\eta(t), \qquad (5.18)$$

then

$$\dot{q}(t) = TA\eta(t) \qquad (5.19)$$

but

$$\eta(t) = T^{-1}q(t)$$

thus

$$\dot{q}(t) = TAT^{-1}q(t). \qquad (5.20)$$

Therefore, the similarity transformation on A to block diagonalize A will map $\eta(t)$ into a new vector $q(t)$ as defined in (5.18).

All of the computations for the decomposition given in this section can be carried out by considering the K matrix which is (nxn). It is not necessary to find eigenvectors of A since the necessary information is contained in K.

5.3. Optimal Control of Undamped Decoupled Systems

It was shown in the previous section that the state matrix could be block diagonalized with selected eigenvalues of $A \varepsilon R^{2nx2n}$ placed in one of the selected block matrices. Let the block matrix for the undamped system have the general form:

$$A_B = TAT^{-1} = \begin{array}{c} \left[\begin{array}{cc} A_{B1} & 0 \\ 0 & A_{B2} \end{array}\right] \begin{array}{l} \}\,2q \\ \}\,2n-2q \end{array} \\ \begin{array}{cc} \underbrace{\phantom{A_{B1}}}_{2q} & \underbrace{\phantom{A_{B2}}}_{2n-2q} \end{array} \end{array} \tag{5.21}$$

where $A_{B1} \varepsilon R^{2qx2q}$ has eigenvalues $|\lambda_i| < \rho$ and $A_{B2} \varepsilon R^{(2n-2q)x(2n-2q)}$ has eigenvalues $|\lambda_i| > \rho$ with ρ a scalar variable and A is the undamped matrix. The value of ρ will be chosen to include the desired modes in A_{B1}.

Consider now the algebraic Riccati equation for $\bar{P} \varepsilon R^{2nx2n}$ and let A_B be the decoupled matrix, thus $\bar{P}$ must satisfy

$$\bar{Q}_1 + A_B^t \bar{P} + \bar{P}A_B - \bar{P}\bar{B}Q_2^{-1}\bar{B}^t\bar{P} = 0 \tag{5.22}$$

where $\bar{Q}_1 \varepsilon R^{2nx2n}$ and $Q_2 \varepsilon R^{mxm}$ are weighting matrices for q(t) and f(t). The matrix $\bar{B}\varepsilon R^{2nxm}$ represents the control input matrix where

$$\dot{q}(t) = A_B q(t) + \bar{B}f(t) \tag{5.23}$$

with $\bar{B} = TB$. It is assumed that the algebraic Riccati equation (5.22) is completely decoupled such that

$$\bar{Q}_{11} + A_{B1}^t\bar{P}_1 + \bar{P}_1A_{B1} - \bar{P}_1\bar{B}_1Q_2^{-1}\bar{B}_1^t\bar{P}_1 = 0 \tag{5.24}$$

$$\bar{Q}_{12} + A_{B2}^t\bar{P}_2 + \bar{P}_2A_{B2} - \bar{P}_2\bar{B}_2Q_2^{-1}\bar{B}_1^t\bar{P}_2 = 0 \tag{5.25}$$

where $\bar{Q}_{11}$, $\bar{Q}_{12}$ are the weighting matrices for states and $\bar{B}^t = [\bar{B}_1^t, \bar{B}_2^t]$ with $\bar{B}_1\varepsilon R^{2qxm}$ and $\bar{B}_2\varepsilon R^{(2n-2q)xm}$. The Riccati matrices $\bar{P}_1$ and $\bar{P}_2$ can be found independently since the equations are decoupled.

Substituting (5.21) for A_B in (5.22),

$$\bar{Q}_1 + (T^{-1})^tA^tT^t\bar{P} + \bar{P}TAT^{-1} - \bar{P}\bar{B}Q_2^{-1}\bar{B}^t\bar{P} = 0 \tag{5.26}$$

and rearranging (5.26) gives

$$T^t\bar{Q}_1T + A^tT^t\bar{P}T + T^t\bar{P}TA - T^t\bar{P}TBQ_2^{-1}B^tT^t\bar{P}T = 0 \tag{5.27}$$

Defining $P = T^t\bar{P}T$ and $Q_1 = T^t\bar{Q}_1T$ also gives

ORIGINAL PAGE IS
OF POOR QUALITY

$$Q_1 + A^tP + PA - PBQ_2^{-1}B^tP = 0 \ , \tag{5.28}$$

which is a usual algebraic Riccati equation for the general control problem.

Denoting equation (5.24) as system 1 and (5.25) as system 2, it follows that system 1 has the system equation

$$\dot{q}_1(t) = A_{B1}q_1(t) + \bar{B}_1 f(t) \tag{5.29}$$

where $q(t) = \begin{bmatrix} q_1(t) \\ q_2(t) \end{bmatrix}$ and with cost functional,

$$J_1(q_1,f,t) = \int_0^\infty [q_1^t(t)\bar{Q}_{11}q_1(t) + f^t(t)Q_2f(t)]dt. \tag{5.30}$$

The other system has the system equation

$$\dot{q}_2(t) = A_{B2}q_2(t) + \bar{B}_2 f(t) \tag{5.31}$$

and cost functional

$$J_2(q_2,f,t) = \int_0^\infty [q_2^t(t)\bar{Q}_{12}q_2(t) + f^t(t)Q_2f(t)]dt, \tag{5.32}$$

where the final state cost was neglected. Assuming that the first system is the desired system for damping, then $\bar{B}_2 = 0$ will leave system 2 undamped and $\bar{P}_2 = 0^1$. It then follows that the Riccati equation for the uncoupled

ORIGINAL PAGE IS
OF POOR QUALITY

system is

$$P = T^t \bar{P} T = \begin{bmatrix} T_{11}^t \bar{P}_1 T_{11} & T_{11}^t \bar{P}_1 T_{12} \\ T_{12}^t \bar{P}_1 T_{11} & T_{12}^t \bar{P}_1 T_{12} \end{bmatrix} , \tag{5.33}$$

where

$$T = \begin{bmatrix} T_{11} & T_{12} \\ T_{21} & T_{22} \end{bmatrix}$$

with $T_{11} \varepsilon R^{2qx2q}$ and $T_{12} \varepsilon R^{2qx(2n-2q)}$. Since $\bar{P}_1$ is symmetric, P is also symmetric as desired. The control input matrix $\bar{B}$ will have the form

$$\bar{B} = \begin{bmatrix} \bar{B}_1 \\ 0_{(2n-2q)xm} \end{bmatrix} . \tag{5.34}$$

Therefore, since T is orthogonal

$$B = \begin{bmatrix} B_1 \\ B_2 \end{bmatrix} = T^{-1}\bar{B} = T^t \begin{bmatrix} \bar{B}_1 \\ 0_{nxm} \end{bmatrix} , \tag{5.35}$$

where B_1, $B_2 \varepsilon R^{nxm}$.

---

[1] $\bar{P}_2$ is not necessarily identical to zero, but certainly $\bar{P}_2 = 0$ is a solution to (5.25) when $\bar{B}_2 = 0$ and $\bar{Q}_{12} = 0$ as assumed. This assumption is necessary to obtain a simple feedback control law.

The numerical value of $\bar{B}_1$ can be c' en so that system 1 is controllable and that $B_1 = 0$ but $B_2 \neq 0$ if the form (5.11) is to be maintained.

The closed-loop system matrix of system 1 after optimal control is then written as

$$\hat{A}_{B1} = A_{B1} - \bar{B}_1 Q_2^{-1} \bar{B}_1^t \bar{P}_1 , \tag{5.36}$$

and, from the equations (5.10),(5.11),(5.33) and (5.35) with $B_1=0$, the closed-loop system matrix of system (5.1) with cost (5.2) and H=0 is given by

$$\hat{A} = \begin{bmatrix} 0_n & I_n \\ -K+B_2Q_2^{-1}B_2^tT_{12}^t\bar{P}_1T_{11} & B_2Q_2^{-1}B_2^tT_{12}^t\bar{P}_1T_{12} \end{bmatrix} . \tag{5.37}$$

The required feedback control vector f(t) was obtained from (5.9),(5.23) and (5.33):

$$f(t) = -Q_2^{-1}\bar{B}^t\bar{P}T\eta(t) \tag{5.38}$$

which can now be determined as Q_2, $\bar{B}$ and $\bar{P}$ are known.

It may be possible to make $B_2Q_2^{-1}B_2^tT_{12}^t\bar{P}_1T_{11} = 0$ in (5.37) by properly selecting B_2 and the weighting matrices. In general, it will not be zero and the stiffness of the structure will be changed. It should also be pointed out that the matrix $C(=B_2Q_2^{-1}B_2^tT_{12}^t\bar{P}_1T_{12})$ does not represent a model

with passive damping as C does not have the proper structure. If the closed-loop system has the feedback defined as (5.38), however, there are no restrictions since this control law is not for a passive system.

5.4. An Illustrative Example

Example 3:

The example 1 in Section 4.4 will be used to illustrate the computational procedure. The stiffness matrix was

$$K = \begin{bmatrix} 9 & -5 & & & & \\ -5 & 11 & -6 & & & \\ & -6 & 13 & -7 & & \\ & & -7 & 15 & -8 & \\ & & & -8 & 17 & -9 \\ & & & & -9 & 19 \end{bmatrix}$$

and the mass matrix was I_6. The system was defined in state space form with state vector $\eta^t(t) = [x^t(t), \dot{x}^t(t)]$:

$$\dot{\eta}(t) = \begin{bmatrix} 0_6 & I_6 \\ -K & 0_6 \end{bmatrix} \eta(t) + \begin{bmatrix} B_1 \\ B_2 \end{bmatrix} f(t). \qquad (5.39)$$

After an equivalence transformation T, which also decoupled the two lowest modes, was applied to (5.39), the system was changed to

$$\dot{q}(t) = \left[\begin{array}{cc|cc} 0_2 & I_2 & \multicolumn{2}{c}{0_{4x8}} \\ -K_{B1} & 0_2 & & \\ \hline \multicolumn{2}{c|}{0_{8x4}} & 0_4 & I_4 \\ & & -K_{B2} & 0_4 \end{array}\right] q(t) + \begin{bmatrix} \bar{B}_1 \\ \bar{B}_2 \end{bmatrix} f(t), \tag{5.40}$$

where $q(t) = T\eta(t)$ with T given in Appendix F and

$$K_{B1} = \begin{bmatrix} 3.83448 & -1.65133 \\ -1.65133 & 2.35772 \end{bmatrix}$$

$$K_{B2} = \begin{bmatrix} 16.81055 & 0.23648 & 6.93450 & 2.07957 \\ 0.23648 & 17.86965 & -1.02621 & 3.41672 \\ 6.93450 & -1.02621 & 24.26231 & -5.16800 \\ 2.07957 & 3.41672 & -5.16800 & 18.86528 \end{bmatrix}.$$

Thus, system 1 was decoupled and given by

$$\dot{q}_1(t) = \begin{bmatrix} 0_2 & I_2 \\ -K_{B1} & 0_2 \end{bmatrix} q_1(t) + \bar{B}_1 f(t), \tag{5.41}$$

which was to be controlled to minimize the cost

$$J_1(q_1,f,t) = \int_0^\infty [q_1^t(t)\bar{Q}_{11}q_1(t) + f^t(t)Q_2 f(t)]dt \tag{5.42}$$

with given $\bar{Q}_{11} = I_4$, $Q_2 = I_1$ and $\bar{B}_1^t = [0\ 0\ -1\ 1]$. The input matrix $\bar{B}_1$ was chosen so that system 1 was controllable.

The Riccati equation (5.24) corresponding to (5.41) and (5.42) was solved by the eigenvector method [61] and a

solution was given by

$$\bar{P}_1 = \begin{bmatrix} 6.31043 & 1.42106 & -0.47965 & -1.24103 \\ 1.42106 & 5.51307 & 0.90973 & 0.84844 \\ -0.47965 & 0.90973 & 2.66756 & 2.46582 \\ -1.24103 & 0.84844 & 2.46582 & 4.10804 \end{bmatrix}$$

With the assumption, $\bar{B}_2 = 0$ the solution P of (5.28) was computed by (5.33) and listed in Appendix F and by (5.36) the closed-loop system matrix of system 1 was

$$A_{B1} = \begin{bmatrix} 0 & 0 & 1 & 0 \\ 0 & 0 & 0 & 1 \\ -4.5959 & 1.5900 & -0.2017 & 1.6422 \\ 2.4127 & -2.2964 & 0.2017 & -1.6422 \end{bmatrix}.$$

Finally, the feedback control vector f(t) was computed from (5.38):

$$f(t) = \Gamma\eta(t)$$

where

$$\Gamma = [-0.4845 \quad -0.5051 \quad -0.2486 \quad 0.0167 \quad 0.1396 \quad 0.1097 \quad -0.1796 \quad 0.1480 \quad 0.6793 \quad 1.0094 \quad 0.9489 \quad 0.5501].$$

The closed-loop system matrix of the original system was given in Appendix F and the eigenvalues of the system before and after optimal control were listed in Table 6.

The input matrix B and the state cost matrix Q_1 of the original system was computed by (5.35) and $Q_1 = T^t\bar{Q}_1T$. B_2 is given below and Q_1 in Appendix F.

$$B_2 = \begin{bmatrix} -0.6696 \\ -0.4798 \\ 0.1589 \\ 0.6767 \\ 0.7775 \\ 0.4835 \end{bmatrix}$$

Table 6. Eigenvalues λ_i of the System Matrix (Example 3)

Mode i	λ_i before control	λ_i after control
1	±j1.135	-0.1713±j1.141
2	±j2.215	-0.7506±j2.117
3	±j3.175	±j3.175
4	±j3.980	±j3.980
5	±j4.687	±j4.687
6	±j5.470	±j5.470

CHAPTER VI

CONCLUSION

6.1 Conclusion

For the vibration suppression of the large flexible space structure, two independent velocity only feedback control schemes — the eigenvalue relocation and the optimal control — of the second-order system were developed in this work. These methods were based on the properties of the lambda-matrices and on an efficient mode decoupling technique by which selected modes were damped with the rest of the modes retaining their pole locations.

The eigenvalue relocation method allowed the designer to place the closed-loop system eigenvalues within the feasible region as illustrated in Fig. 1. This development was made possible by the aid of the properties of the lambda-matrices discovered in Section 3.2. Theorem 3.4 is considered fundamental in this class of system and Lemma 3.5 provides the rule on which the eigenvalues move.

As a result, the vibration control by the eigenvalue relocation was accomplished by the following sequence. First, through the decoupling procedure described in Section 4.1 modes were selected for which damping was required. To each decoupled subsystem a damping matrix was computed in such a

way that the subsystem had the pre-assigned eigenvalues. Next, under the assumption that the actuators and the sensors are collocated, a time-invariant velocity only feedback gain was determined in the process which brought the coordinates of the subsystems back to the original generalized coordinate system. The whole procedure was demonstrated by numerical examples.

Similar results as those achieved in this work may be obtained through the pole assignment by gain output feedback methods reported in [26-29], but our approach is completely different from theirs: our method is devised by using lambda-matrix with the constraint that K is invariant rather than on the state space which resulted from the conversion of the second-order system equations. In addition, it is based on the assumption that the actuator and the sensor matrix are designed at our disposal instead of being given as a part of a plant. Therefore, it may be meaningless to compare these methods and no attempt was made to this end. Roughly speaking, however, their methods can assign min(n, m+r-1) poles arbitrarily close to min(n, m+r-1) specified symmetric values but nothing is said about the remaining poles, where n, m and r are the number of states, the rank of actuator matrix and the rank of sensor matrix, respectively. Whereas, in this work 2m poles ($m=r$ and $n \geq 2m$) can be assigned almost arbitrarily within the feasible region as conjugate pairs

with the rest of the poles unchanged.

One advantage of this method over the classical normal mode (complete decoupling) technique is that the feasible region is much wider than that of the classical normal mode case as shown in Figs. 3 and 4. This freedom of choosing the locations of system eigenvalues can enhance the damping significantly, especially at the low frequency modes where more damping is required.

The eigenvalue assignment technique developed in this work also has some shortcomings. First of all, the system of simultaneous equations, (4.12), is non-linear. Consequently, the existence of a solution is not guaranteed, nor is the uniqueness of a solution. Nevertheless, a solution never failed to exist during the course of computational experiments. Since the damping assignment is achieved at a (2x2) subsystem level, computational procedure is not very involved, but the simultaneous equations require some iterations.

Another disadvantage of the velocity only feedback control scheme is that the sensor and the actuator matrix must be computed. When they are given as a part of the plant, instead, the gain matrix may be approximated by the least square method, for instance. If this is the case, the eigenvalues of the closed-loop system will certainly deviate from the pre-determined position even though the error may not be

significant because of the continuity of the eigenvalues. This problem remains for further research.

On the other hand, a procedure for optimal control of selected modes was also developed in the last chapter and it was shown that the control vector for a rather small second-order lambda-matrix could be determined in such a way that damping was added to the lowest modes with the other modes remaining unchanged. The elimination of mode spillover problem was made possible by the mode decoupling procedure and by the manipulation of the actuator and the sensor matrices.

Finally, the decoupling procedure for both methods requires only the eigenvectors of the assigned modes. This fact resulted in a significant saving of computing time when the number of modes involved in damping assignment was less than one fourth of the total modes.

The main contribution of this work can be summarized as follows: i) unique properties of the second-order lambda-matrix were discovered and applied to the vibration control problem, ii) a computational procedure for the damping matrix determination with the stiffness matrix invariant was established, iii) a technique to decouple the large system into smaller subsystems through partial eigenvectors was developed, and iv) an optimal control method of the selected modes without any spillover to other modes was investigated.

6.2 Recommendations for Further Work

One of the topics which deserves further research is the passive damping algorithm: the complex sensory and actuating devices of the active control may provide enough motivation for research on the passive damping of the large space structure. In order to realize the passive damping, however, the structure of the damping matrix should be in a simple form such as diagonal or tridiagonal. Another promising area is to extend the theory developed in this work to higher-order systems; third-order, fourth-order, and so forth. This extension may be established without much difficulty since there is well-developed theory on the corresponding lambda-matrices. An algorithm of damping matrix determination for bigger than a (2x2) subsystem is worth investigating. As to the optimal control part of the work, it would be worthwhile to find a necessary condition for the Riccati equation to be decoupled completely. Finally, it may be interesting to combine the eigenvalue relocation technique and the optimal control method in such a way that the selected modes are controlled optimally in some sense with desirable pole locations.

REFERENCES

1. Balas, M. J., "Trends in Large Space Structure Control Theory:Fondest Hopes, Wildest Dreams," IEEE Transactions on Automatic Control, Vol.AC-27, June 1982, PP.522-535.

2. Curtain, R. and Pritchard, A., Infinite Dimensional System Theory, Springer-Verlag, New York, 1978.

3. Ray, R. and Lainiotis, D., DPS:Identification, Estimation and Control, Marcel Dekker, New York, 1978

4. Aziz, A., Wingate, J. and Balas, M.(ed.), Control Theory of Systems Governed by PDE, Academic Press, N.Y. 1977.

5. Meirovitch, L. and Baruh, H., "Robustness of the Independent Modal-Space Control Method", Journal of Guidance, Control and Dynamics, Vol.6, Jan.-Feb. 1983. PP.20-25.

6. Meirovitch, L., Analytical Methods in Vibrations, Macmillan, New York, 1967.

7. Strang, G. and Fix, G. J., An Analysis of the Finite Element Method, Prentice-Hall, Englewood Cliffs, N.J., 1973.

8. Frazer, R. A., Duncan, W. J. and Collar, A. R., Elementary Matrices and Some Applications to Dynamics and Differential Equations, Cambridge University Press, London, England, 1938.

9. Meirovitch, L. and Rajaram, S., "On the Uniqueness of the Independent Modal-Space Control Method," Proceedings of the Third VPI&SU/AIAA Symposium on Dynamics and Control of Large Flexible Spacecraft, Blacksburg, Virginia, June 1981, PP.555-571.

10. Kirk, D. E., Optimal Control Theory, Prentic-Hall, Englewood Cliffs, N.J., 1970, Chapter 5.

11. Wonham, W. M., "On Pole Assignment in Multi-Input Controllable Linear Systems," IEEE Transactions on Automatic Control, AC-12, Dec. 1967, PP.660-665

12. Balas, M. J., "Modal Control of Certain Flexible Dynamic Systems," SIAM Journal on Control and Optimization, Vol.16, May 1978, PP.450-462.

13. Balas, M. J., "Active Control of Flexible Systems," J. of Optimization Theory and Applications, Vol.25 July 1978, PP.415-436.

14. Schaechter, D. B., "Optimal Local Control of Flexible Structures," Journal of Guidance and Control, Vol.4, Jan.-Feb. 1981, PP.22-26.

15. Hegg, D. R., "Extensions of Suboptimal Output Feedback Control with Application to Large Space Structures," Journal of Guidance and Control, Vol.4, Nov.-Dec. 1981,

16. Kosut, R. L., "Suboptimal Control of Linear Time-Invariant Systems Subject to Control Structure Constraints," IEEE Transactions on Automatic Control, Vol.AC-14, Oct. 1970, PP.557-563.

17. Levine, W. S., and Athans, M., "On the Determination of the Optimal Constant Output Feedback Gains For Linear Multivariable Systems," IEEE Transactions on Automatic Control, Vol.AC-15, Feb. 1970, PP.44-48.

18. Kalman, R. E., "When is a Linear Control System Optimal?" Transactions ASME:Journal of Basic Engineering, Ser.D, March 1964, PP.51-60.

19. Anderson, B. D. O. and Moore, J. B., Linear Optimal Control, Prentice-Hall, Englewood Cliffs, N.J., 1971, P.40

20. Arbel, A. and Gupta, N. K.,"Robust Colocated Control for Large Flexible Space Structures," Journal of Guidance and Control, Vol.4, Sep.-Oct. 1981, PP.480-486.

21. Joshi, S. M., and Groom, N. J., "Optimal Member Damper Controller Design for Large Space Structures," Journal of Guidance and Control, Vol.3, July-Aug. 1980, PP.378-379.

22. Denman, E. D., "Research on Numerical Algorithms for Large Space Structures, Technical Report, University of Houston, Houston, Texas, Oct. 1982, PP.113-135.

23. VanLandingham, H., Caglayan, A. and Floyd, J., "Approximation Techniques for Optimal Modal Control of Flexible Systems," Proceedings of the Third VPI&SU/AIAA Symposium on Dynamics and Control of Large Flexible Spacecraft, Blacksburg, Virginia, June 1981, PP.89-99.

24. Meirovitch, L. and Oz, H., "Modal Space Control of Distributed Gyroscopic Systems," Journal of Guidance and Control, Vol.3, Mar.-Apr. 1980, PP.140-150.

25. Oz, H. and Meirovitch, L., "Optimal Modal Space Control of Flexible Gyroscopic Systems " Journal of Guidance and Control, Vol.3, May-June 1980, PP.218-226.

26. Kimura, H., "Pole Assignment by Gain Output Feedback," IEEE Transactions on Automatic Control, Vol.AC-20, August 1975, PP.509-516.

27. Davison, E. J., and Wang, S. H., "On Pole Assignment in Linear Multivariable Systems Using Output Feedback," IEEE Transactions on Automatic Control, Vol.AC-20, August 1975, PP.516-520.

28. Davison, E. J. and Chow, S. G.," An Algorithm for the Assignment of Closed-Loop Poles Using Output Feedback in Large Linear Multivariable Systems," IEEE Transactions on Automatic Control, Vol.AC-18, Feb. 1973, PP.74-75.

29. Kimura, H., "A Further Result on the Problem of Pole Assignment by Output Feedback," IEEE Transactions on Automatic Control, Vol.AC-22, June 1977, PP.458-463.

30. Balas, M. J., "Direct Velocity Feedback Control of Large Space Structures," Journal of Guidance and Control, Vol.2, May-June 1979, PP.252-253.

31. Aubrun, J. N., "Theory of the Control of Structures by Low-Authority Controllers," Journal of Guidance and Control, Vol.3, Sept.-Oct. 1980, PP.444-451.

32. Hughes, P. C., "Passive Dissipation of Energy in Large Space Structures," Journal of Guidance and Control, Vol.3, July-Aug. 1980, PP.380-382.

33. Chen, G. and Russell, D. L., "A Mathematical Model for Linear Elastic Systems with Structural Damping," Quarterly of Applied Mathematics, Jan. 1982, PP.433-454.

34. Caughey, T. K. and O'Kelly, M. E. J., "Classical Normal modes in Damped Linear Dynamic Systems," Transactions of ASME:Journal of Applied Mechanics, Sept. 1965, PP.583-588.

35. Müller, P. C., Stabilität und Matrizen, Springer Verlag, Berlin, 1977.

36. Shieh, L. S., Shih, C. D. and Yates, R. E., "Some Sufficient and Some Necessary Conditions for the Stability of Multivariable Systems," Journal of Dynamic Systems, Measurement and Control, Vol.100, Sept. 1978, PP.214-218.

37. Borri, M. and Mantegazza, P., "Efficient Solution of Quadratic Eigen problems Arising in Dynamic Analysis of Structures," Computer Methods in Applied Mechanics and Engineering, Vol.12, 1977, PP.19-31.

38. Scott, D. S., "Solving Sparse Quadratic λ-Matrix Problems," Technical Report ORNL/CSD-69, Union Carbide Corp., Nuclear Division, Oak Ridge, TN, Nov. 1980

39. Hughes, P. C. and Skelton, R. E., "Controllability and Observability of Linear Matrix-Second-Order Systems," Transactions of ASME:Journam of Applied Mechanics, Vol.47, June 1980, PP.415-420.

40 Meirovitch, L., "A New Method of Solution of the Eigenvalue Problem for Gyroscopic Systems," AIAA Journal, Vol.12, No.10, Oct. 1974, PP.1337-1342.

41. _____, "A Modal Analysis for the Response of Linear Gyroscopic Systems," Transactions fo ASME:Journal of Applied Mechanics, Vol.42, No.2, June 1975, PP.446-450.

42. Lancaster, P., Lambda-Matrices and Vibrating Systems, Pergamon Press, Oxford, England, 1966.

43. Gohberg, I., Lancaster, P. and Rodman, L.," Matrix Polynomials", Academic Press, N.Y., N.Y., 1982.

44. Dennis, J. E., Traub, J. F. and Weber, R. P., "The Algebraic Theory of Matrix Polynomials," SIAM Journal on Numerical Analysis, Vol.13, No.6, Dec. 1976, PP.831-845.

45. _____, _____, _____, "Algorithms for Solvents of Matrix Polynomials," SIAM Journal on Numerical Analysis, Vol.15, No.3, June 1978, PP.523-533.

46. Shieh, L. S., Tsay, Y. T. and Coleman, N. P., "Algorithms for Solvents and Spectral Factors of Matrix Polynomials," International Journal of System Science, Vol.12, No.11, 1981, PP.1303-1316.

47. Denman, E. D., "Matrix Polynomials, Roots and Spectral Factors," Applied Mathematics and Computation, Vol.3, 1977, PP.35[illegible].

48. Shieh, L. S. and Tsay, Y. T., "Transformations of Solvents and Spectral Factors of Matrix Polynomials, and their Applications," International Journal of Control, vol.34, No.4, 1981, PP.813-823.

49. Singh, H. N. and Denman, E. D., "A Computational Algorithm for Spectral Factorization with Applications to Filter Synthesis," International Journal of Electronics, Vol. 42, No.6, 1976, PP.559-568.

50. Black, E. F., and _____, "Spectral Factorization of Proper Matrix Polynomials," International Journal of Electronics, Vol. 42, No.6, 1976, PP.569-579.

51. Denman, E. D. and Leyva-Ramos, J. and Jeon, G. J., "The Algebraic Theory of Latent Projectors in Lambda Matrices," Applied Mathematics and Computation Vol.9, 1981, PP.273-300.

52. Tsay, Y. T. and Shieh, L. S., "Block Decompositions and Block Modal Controls of Multivariable Control Systems," Automatica, Vol. 19, No.1, 1983, PP.29-40

53. Shieh, L. S. and Tsay, Y. T., "Transformations of a class of Multivariable Control Systems to Block Companion Forms." IEEE Transactions on Automatic Control, Vol. AC-27, No.1

54. Gibson, J. S., "A note on Stabilization of Infinite Dimensional Linear Oscillators By Compack Linear Feedback" SIAM Journal on Control and Optimization, Vol.18, 1980, PP.311-316.

55. Zienkiewicz, O. C., The Finite Element Method, 2nd, ed., McGraw-Hill, N.Y., N.Y.,1980.

56. Kailath, T., Linear Systems, Prentice-Hall, Englewood Cliffs, N.J., 1980.

57. Lancaster, P. and Webber, P. N., "Jordan Chains for Lambda-Matrices," Linear Algebra and Its Applications Vol.1, 1968, PP.563-569.

58. Jeon, G. J. and Denman, E. D., "Damping Assignment to Linear Quadratic Systems," Proceedings of the Fourth VPJ&SU/AIAA Symposium on Dynamics and Control of Large Structures, Blacksburg, Virginia, June 1983.

59. Stoer, J. and Bulirsch, R., Introduction to Numerical Analysis, Springer-Verlag, 1980, P.395.

60. Denman, E. D. and Beavers, Jr., A. N., "The Matrix Sign Function and Computations in Systems," Applied Mathematics and Computation, Vol.2, 1976, PP.63-94.

61. Potter, J. E., "Matrix Quadratic Solutions," Journal of SIAM Applied Mathematics, Vol.14, No.3, May 1966, PP.496-501.

ORIGINAL PAGE IS
OF POOR QUALITY

APPENDIX A

LAMBDA-MATRICES AND GENERALIZED LATENT VECTORS[51]

Let $\bar{A}_i \varepsilon C^{nxn}$, $i = 0,1,\ldots,m$ and $\lambda \varepsilon C$. A λ-matrix is defined as

$$\bar{A}(\lambda) = \bar{A}_0\lambda^m + \bar{A}_1\lambda^{m-1} + \ldots + \bar{A}_m \ . \tag{A.1}$$

A latent root is also defined by a scalar $\lambda_i \varepsilon C$ such that $A(\lambda_i)$ is singular. When $\bar{A}_0$ is non-singular the λ-matrix is called regular and in such a case a monic λ-matrix, $A(\lambda)$ can be obtained by changing coordinates, i.e.,

$$\begin{aligned} A(\lambda) &= A_0^{-1}\bar{A}(\lambda) \\ &= I\lambda^m + A_1\lambda^{m-1} + \ldots + A_m \ . \end{aligned} \tag{A.2}$$

Associated with $A(\lambda)$ a block companion matrix is defined as

$$A_c = \begin{bmatrix} 0_n & I_n & 0_n & \cdots & 0_n \\ 0_n & 0_n & I_n & \ddots & \vdots \\ \vdots & & \ddots & \ddots & \vdots \\ \vdots & & & \ddots & 0_n \\ 0_n & \cdots & \cdots & 0_n & I_n \\ -A_m & -A_{m-1} & \cdots & \cdots & -A_1 \end{bmatrix} . \tag{A.3}$$

ORIGINAL PAGE IS
OF POOR QUALITY

There are very useful relationships between eigenvalues and eigenvectors of the block companion matrix and latent roots and latent vectors, which will be presented in the following definition and theorems.

<u>Theorem A.1</u>. Let $A(\lambda)$ be defined as in (A.2) and A_c as given in (A.3) then the latent roots of $A(\lambda)$ are the eigenvalues of A_c.

Proof: When $(I\lambda - A_c)$ is post-multiplied by the following unimodular block Toeplitz matrix,

$$V(\lambda) = \begin{bmatrix} I_n & 0_n & \cdots & 0_n \\ \lambda I_n & I_n & \ddots & \vdots \\ \vdots & \ddots & \ddots & \vdots \\ \vdots & & \ddots & 0_n \\ \lambda^{m-1} I_n & \cdots & \lambda I_n & I_n \end{bmatrix}$$

the following result is obtained

$$(I\lambda - A_c)\, V(\lambda) = \begin{bmatrix} 0_n & -I_n & 0_n & \cdots & 0_n \\ 0_n & 0_n & -I_n & \ddots & \vdots \\ \vdots & & \ddots & \ddots & 0_n \\ 0_n & \cdots & \cdots & 0_n & -I_r \\ A(\lambda) & * & \cdots & \cdots & * \end{bmatrix}$$

in which $A(\lambda)$ is as given in (A.2). Now when the determinant of the above expression is taken by expanding minors along the ones, it follows that

$$\det[(I\lambda-A_c)V(\lambda)] = \det(I\lambda-A_c) = (-1)^{mn} \det A(\lambda)$$

which implies that the eigenvalues of A_c are latent roots of $A(\lambda)$. ∇∇∇

<u>Definition A.1</u>. Let $A(\lambda)$ be defined as in (A.2) with latent roots λ_i of multiplicity n_i. Primary right and left latent vectors, $y_i^{(j)}$, $z_i^{(j)} \varepsilon C^{nx1}$, respectively, are defind as

$$A(\lambda_i)y_i^{(j)} = 0_{nx1} \qquad j = 1,2,\ldots,q_i \tag{A.4}$$

$$A^t(\lambda_i)z_i^{(j)} = 0_{nx1} \qquad j = 1,2,\ldots,q_i \tag{A.5}$$

where the number of primary right or left latent vectors of λ_i denoted by q_i, is the nullity of $A(\lambda_i)$

It is known [56] that a primary right latent vector $y_i^{(j)}$ is a subvector of a right eigenvector of the block companion matrix (A.3) with

$$y_{ci}^{(j)} = \begin{bmatrix} y^{(j)} \\ \lambda_i y_i^{(j)} \\ \vdots \\ \lambda_i^{n-1} y_i^{(j)} \end{bmatrix} \tag{A.6}$$

ORIGINAL PAGE IS
OF POOR QUALITY

where $y_{ci}^{(j)}$ satisfies the algebraic equation $(A_c - \lambda_i I)y_{ci}^{(j)} = 0_{mnx1}$. It is also not difficult to show that a primary left latent vector, $z_i^{(j)}$, satisfies a similar form as the primary right latent vector with

$$z_{ci}^{(j)} = \begin{bmatrix} (\lambda_i^{m-1} I + A_1^t \lambda_i^{m-2} + \ldots + A_{m-2}^t) z_i^{(j)} \\ (\lambda_i^{m-2} I + A_1^t \lambda_i^{m-3} + \ldots + A_{m-2}^t) z_i^{(j)} \\ \vdots \\ (\lambda_i I + A_1^t) z_i^{(j)} \\ z_i^{(j)} \end{bmatrix} \tag{A.7}$$

where $z_{ci}^{(j)}$ is an eigenvector of the block companion matrix.

It should be noted that the maximum number of primary right or left latent vectors is n, i.e., $\max_i(q_i) = n$. If $n_i > q_i$ then $n_i - q_i$ generalized latent vectors must be constructed to define the complete set of latent vectors of the lambda matrix. These generalized latent vectors can be obtained from a chain rule given in [57]. Notice that each of these $n_i - q_i$ generalized latent vectors may or may not have a chain of vectors according to the structure of the Jordan block of the block companion matrix. The length of the chain for each primary latent vector could be determined during the computation of vectors until no vector satisfies the chain rule.

Theorem A.2. Let $A(\lambda)$ be defined as in (A.2) and a set of right latent vectors $y_i^{(1)}, y_i^{(2)}, \ldots, y_i^{(h_j)} \varepsilon C^{nx1}$ form a right Jordan chain associated with the latent root λ_i and the j-th primary latent vector. Then, the chain rule is given as

$$A(\lambda_i)y_i^{(\ell)} + \frac{dA(\lambda_i)}{d\lambda} y_i^{(\ell-1)} + \frac{1}{2!} \frac{d^2A(\lambda_i)}{d\lambda^2} y^{(\ell-2)} + \ldots$$

$$+ \frac{1}{(\ell-1)!} \frac{d^{(\ell-1)}A(\lambda_i)}{d^{(\ell-1)}} y_i^{(1)} = 0_{nx1}, \ \ell = 1,2,\ldots,h_j \tag{A.8}$$

where $y_i^{(1)}$ is the j-th primary right latent vector and h_j is the length of the Jordan chain. The vectors $y_i^{(k)}$ for $1 < k \leq h_j$ are generalized right latent vectors of the j-th primary latent vector.

Proof. The proof of this theorem is obtained from consideration of the chain rule for generalized eigenvectors. The chain rule is

$$\begin{aligned} (A_c-\lambda_i I)y_{ci}^{(2)} &= y_{ci}^{(1)} \\ (A_c-\lambda_i I)y_{ci}^{(3)} &= y_{ci}^{(2)} \\ &\vdots \qquad\qquad \vdots \\ (A_c-\lambda_i I)y_{ci}^{(h_j)} &= y_{ci}^{(h_j-1)} \end{aligned} \tag{A.9}$$

ORIGINAL PAGE IS
OF POOR QUALITY

being $y_{ci}^{(-)}$ the j-th primary eigenvector and $y_{ci}^{(k)}$ for $1 < k \leq h_j$ its generalized eigenvectors associated with the eigenvalue λ_i of A_c. When (A.9) is expanded the chain rule is obtained where $y_i^{(k)}$ is formed from the first m rows of $y_{ci}^{(k)}$.

Generalized right latent vectors $y_i^{(1)}$ and $y_i^{(2)}$ will be obtained from

$$A(\lambda_i)y_i^{(2)} + \frac{dA(\lambda_i)}{d\lambda} y_i^{(1)} = 0_{nx1}$$

$$A(\lambda_i)y_i^{(3)} + \frac{dA(\lambda_i)}{d\lambda} y_i^{(2)} + \frac{1}{2!} \frac{d^2A(\lambda_i)}{d\lambda^2} y_i^{(1)} = 0_{nx1}$$

or (A.8) in general. ∇∇∇

The chain rule can also be utilized to modify (A.6) for the relation between generalized eigenvectors and generalized latent vectors with

$$y_{ci}^{(k)} = \begin{bmatrix} y_i^{(k)} \\ \lambda_i y_i^{(k)} + y_i^{(k-1)} \\ \lambda_i^2 y_i^{(k)} + 2\lambda_i y_i^{(k-1)} + y_i^{(k-2)} \\ \vdots \\ \sum_{\substack{j=0 \\ [k-j \geq 1]}}^{m-1} \binom{n-1}{j} \lambda_i^{m-j-1} y_i^{(k-j)} \end{bmatrix} \qquad (A.10)$$

ORIGINAL PAGE IS
OF POOR QUALITY

Theorem A.3. Let $A(\lambda)$ be defined as in (A.2), a set of left latent vectors $z_i^{(1)}, z_i^{(2)}, \ldots, z_i^{(h_j)} \varepsilon C^{nx1}$ from a left Jordan chain associated with the latent root λ_i and the j-th primary latent vector. The chain rule is given by

$$A^t(\lambda_i)z_i^{(\ell)} + \frac{dA^t(\lambda_i)}{d\lambda} z_i^{(\ell-1)} + \frac{1}{2!} \frac{d^2A^t(\lambda_i)}{d\lambda^2} z_i^{(\ell-2)} + \ldots$$

$$+ \frac{1}{(\ell-1)!} \frac{d^{(\ell-1)}A^t(\lambda_i)}{d\lambda^{(\ell-1)}} z_i^{(1)} = 0_{nx1}, \ \ell = 1,2\ldots,h_j \tag{A.11}$$

where $z_i^{(1)}$ is the j-th primary left latent vector and h_j is the length of the Jordan chain. The vectors $z_i^{(k)}$ for $1 < k \leq h_j$ are generalized left latent vectors of the j-th primary latent vector.

Proof; The proof of this theorem follows directly from generalized left eigenvectors $z_{ci}^{(k)}$ of the companion form. Generalized left latent vector $z_i^{(k)}$ will be formed from the last m rows of $z_{ci}^{(k)}$. ∇∇∇

Generalized left eigenvector $z_{ci}^{(k)}$ can also be defined from latent vectors $z_i^{(k)}$ of λ_i, the latent roots λ_i and the lambda matrix $A(\lambda)$. Utilizing (A.7) and the chain rule for $z_{ci}^{(k)}$, it follows that left generalized eigenvectors satisfy the relation;

ORIGINAL PAGE IS
OF POOR QUALITY

$$z_{ci}^{(k)} = \begin{bmatrix} (\lambda_i^{m-1} I + A_1^t \lambda_i^{m-2} + \ldots + A_{m-1}^t) z_i^{(k)} + (m-1)\lambda^{m-2} I + (m-2) A_1^t \lambda_i^{m-3} + \ldots + A_{m-2}^t) z_i^{(k-1)} + \ldots \\ \vdots \\ (\lambda_i^2 I + A_1^t \lambda_i + A_2^t) z_i^{(k)} + (2\lambda_i I + A_1^t) z_i^{(k-1)} + z_i^{(k-2)} \\ (\lambda_i I + A_1^t) z_i^{(k)} + z_i^{(k-1)} \\ z_i^{(k)} \end{bmatrix} \tag{A.12}$$

where the latent vector $z_i^{(k)}$ is defined only for $1 < k \leq h_j$.

APPENDIX B

SOLVENTS OF MATRIX POLYNOMIALS

Associated with an m-th order lambda-matrix (A.2) two types of polynomial, the right matrix polynomial

$$A_R(X) = X^m + A_1X^{m-1}+\ldots+A_m, \tag{B.1}$$

and the left matrix polynomial

$$A_L(X) = X^m + X^{m-1}A_1+\ldots+A_m \tag{B.2}$$

are defined for $X\varepsilon C^{nxn}$. Matrices X_R, $X_L\varepsilon C^{nxn}$ are called a right and a left solvent if $A_R(X_R) = 0_{nxn}$ and $A_L(X_L) = 0_{nxn}$, respectively. In this appendix structures of solvents will be examined in terms of latent roots and latent vectors and theorems on the existence of solvents will be given at the end.

<u>Theorem B.1</u>. Let $J_i\varepsilon C^{n_i xn_i}$ be a single Jordan block with latent root λ_i of multiplicity $n_i \leq n$ and $y_i^{(1)}$, $y_i^{(2)}$,..., $y_i^{(n_i)} \varepsilon C^{nx1}$ be generalized right latent vectors of A (λ), then

$$\sum_{k=0}^{m} A_k Y_i J_i^{m-k} = 0_{nxn_i} \tag{B.3}$$

where $Y_i = [y_i^{(1)}\ y_i^{(2)}\ \ldots\ y_i^{(n_i)}]$ and $A_0 = I$.

ORIGINAL PAGE IS
OF POOR QUALITY

Proof: Let $Y_{ci} = [y_{ci}^{(1)} \ \ldots \ y_{ci}^{(n_i)}]$, where $y_{ci}^{(j)}$ is a primary right eigenvector of the block companion matrix A_c(A.3). Then it is not difficult to obtain Y_{ci} from (A.6) and Y_{ci} is written as

$$Y_{ci} = \begin{bmatrix} Y_i \\ Y_i J_i \\ \vdots \\ Y_i J_i^{m-1} \end{bmatrix} . \tag{B.4}$$

From the chain of generalized eigenvectors (A.9) of the block companion matrix A_c it follows that

$$A_c Y_{ci} = Y_{ci} J_i$$

i.e.,

$$\begin{bmatrix} 0_n & I_n & 0_n & \cdots & 0_n \\ 0_n & 0_n & I_n & \cdots & 0_n \\ & & & \vdots & \\ -A_m & -A_{m-1} & -A_{m-2} & \cdots & -A_1 \end{bmatrix} \begin{bmatrix} Y_i \\ Y_i J_i \\ \vdots \\ Y_i J_i^{m-1} \end{bmatrix} = \begin{bmatrix} Y_i J_i \\ Y_i J_i^2 \\ \vdots \\ Y_i J_i^m \end{bmatrix} \tag{B.5}$$

Thus, the last row of (B.5) provides the conclusion of the theorem. ∇∇∇

<u>Theorem B.2</u>. Let $J_i \varepsilon C^{n_i x n_i}$ be a single Jordan block with latent root λ_i of multiplicity $n_i \leq n$ and $z_i^{(1)}, z_i^{(2)}, \ldots, z_i^{(n_i)} \varepsilon C^{nx1}$ be generalized left latent vectors of $A(\lambda)$, then

ORIGINAL PAGE IS
OF POOR QUALITY

$$\sum_{k=0}^{n} J_i^{m-k} Z_i A_k = 0_{n_i x n} \tag{B.6}$$

where $A_0 = I$ and $Z_i = [z_i^{(n_i)} \; z_i^{(n_i-1)} \; \ldots \; z_i^{(1)}]^t$.

Proof: Let $Z_{ci} = [z_{ci}^{(n_i)} \; z_{ci}^{(n_i-1)} \; \ldots . \; z_{ci}^{(1)}]^t$, where $z_{ci}^{(j)}$ is a primary left eigenvector of the block companion matrix A_c(A.3). Then it follows from (A.12) that

$$Z_{ci} = [Z_i \; J_i Z_i \; \ldots \; J_i^{m-1} \; Z_i] \tag{B.7}$$

and

$$Z_{ci} A_c = J_i Z_{ci}$$

i.e.,

$$[Z_i \; J_i Z_i \ldots J^{m-1} Z_i] \begin{bmatrix} 0_n & 0_n \ldots 0_n & -A_m \\ I_n & 0_n \ldots 0_n & -A_{m-1} \\ & \ddots & \vdots \\ 0_n & 0_n \ldots I_n & -A_1 \end{bmatrix} = [J_i Z_i \; J_i^2 Z_i \ldots J_i^{m-1} Z_i] \tag{B.8}$$

The proof is obtained from the last column of (B.8). ∇∇∇

<u>Theorem B.3</u>. Let $J_i \varepsilon C^{n_i x n_i}$ be defined as the same way as in Theorem B.1, $Y = [Y_1 \; Y_2 \; \ldots \; Y_\ell] \; \varepsilon C^{nxn}$, and $J = B_{diag}(J_1, \ldots J_\ell) \varepsilon C^{nxn}$ with $\sum_{i=1}^{\ell} n_i = n$. Then,

$$\begin{bmatrix} 0_n & I_n & 0_n & \ldots & 0_n \\ 0_n & 0_n & I_n & \ldots & 0_n \\ & & & \vdots\vdots\vdots & \\ -A_m & -A_{m-1} & -A_{m-2} & \ldots & -A_1 \end{bmatrix} \begin{bmatrix} Y \\ YJ \\ \vdots \\ YJ^{m-1} \end{bmatrix} = \begin{bmatrix} YJ \\ YJ^2 \\ \vdots \\ YJ^m \end{bmatrix}. \tag{B.9}$$

C-2

ORIGINAL PAGE IS
OF POOR QUALITY

Proof: Since

$$\begin{bmatrix} Y \\ YJ \\ \vdots \\ YJ^{m-1} \end{bmatrix} = \begin{bmatrix} Y_1 & \cdots & Y_\ell \\ Y_1J_1 & \cdots & Y_\ell J_\ell \\ \vdots & & \vdots \\ Y_1J_1^{m-1} & \cdots & Y_\ell J_\ell^{m-1} \end{bmatrix},$$

the proof is completed when (B.5) is applied block column-wise ℓ times. ∇∇∇

<u>Theorem B.4</u>. Let $J_1 \varepsilon C^{n_i x n_i}$, $Z_i \varepsilon C^{n x n_i}$ be defined as the same way in Theorem (B.2) and $Z = [Z_1^t \;\; Z_2^t \;\; \ldots \;\; Z_\ell^t]^t$, $J = \mathrm{Bdiag}(J_1, J_2, \ldots, J_\ell) \varepsilon C^{nxn}$ with $\sum_{i=1}^{\ell} n_i = n$, then,

$$[Z \;\; JZ \;\; \ldots J^{m-1}Z] \begin{bmatrix} 0_n & \cdots & 0_n & -A_m \\ I_n & \cdots & 0_n & -A_{m-1} \\ & \ddots & & \vdots \\ 0_n & \cdots & I_n & -A_1 \end{bmatrix} = [JZ \;\; J^2Z \;\; \ldots \;\; J^mZ] \qquad (B.10)$$

Proof: Since

$$[Z \;\; JZ \;\; \ldots J^{m-1}Z] = \begin{bmatrix} Z_1 & J_1Z_1 & \cdots & J_1^{m-1}Z_1 \\ Z_2 & J_2Z_2 & \cdots & J_2^{m-1}Z_2 \\ \vdots & \vdots & & \vdots \\ Z_\ell & J_\ell Z_\ell & \cdots & J_\ell^{m-1}Z_\ell \end{bmatrix}$$

when (B.8) is applied block rowwise ℓ times the proof is done.

$\nabla\nabla\nabla$

<u>Theorem B.5</u>. Let $J \varepsilon C^{nxn}$ be the same as in Theorem B.3. If n columns of $Y \varepsilon C^{nxn}$ (n right latent vectors including generalized right latent vectors) are linearly independent, then YJY^{-1} is a right solvent of $A(\lambda)$.

Proof: From the last block row of (B.9)

$$\sum_{k=0}^{m} A_k Y J^{m-k} = 0_{nxn} \text{ with } A_0 = I. \tag{B.11}$$

Since Y^{-1} exists by the hypothesis post-multiplying y^{-1} at both sides of (B.11) gives $A_R(YJY^{-1}) = 0_{nxn}$, which implies that YJY^{-1} is a right solvent of $A(\lambda)$ by the definition.

$\nabla\nabla\nabla$

<u>Theorem B.6</u>. Let $J \varepsilon C^{nxn}$ be the same as in Theorem B.4. If n rows of $Z \varepsilon C^{nxn}$ (n left latent vectors including generalized left latent vectors) are linearly independent, then $Z^{-1}JZ$ is a left solvent of $A(\lambda)$.

Proof: From the last block column of (B.10)

$$\sum_{k=0}^{m} J^{m-k} Z A_k = 0_{nxn}, \text{ with } A_0 = I. \tag{B.12}$$

Since Z^{-1} exists by the hypothesis pre-multiplying Z^{-1} at both sides of (B,12) gives $A_L(Z^{-1}JZ) = 0_{nxn}$, which implies that $Z^{-1}JZ$ is a left solvent of $A(\lambda)$ by the definition.

$\nabla\nabla\nabla$

ORIGINAL PAGE IS
OF POOR QUALITY

APPENDIX C

PROOF OF THEOREM 3.3

Proof [42, PP.48-49] We have

$$
\begin{aligned}
A(\lambda) &= A_0\lambda^m + A_1\lambda^{m-1}+\ldots+A_m \\
&= A_0\lambda^{m-1}(I\lambda-R) + (A_0R+A_1)\lambda^{m-1} + A_2\lambda^{m-2} +\ldots+A_m \\
&= [A_0\lambda^{m-1} + (A_0R+A_1)\lambda^{m-2}]\ (I\lambda-R) \\
&\qquad + (A_0R^2+A_1R+A_2)\lambda^{m-2} + A_3\lambda^{m-3} +\ldots+A_m \\
&= [A_0\lambda^{m-1}+(A_0R+A_1)\lambda^{m-2} +\ldots+(A_0R^{m-1}+A_1R^{m-2}+\ldots+A_{m-1})](I\lambda-R \\
&\qquad + (A_0R^m+A_1R^{m-1} +\ldots+A_{m-1}R+A_m) \qquad (C.1)
\end{aligned}
$$

If R is a right solvent of $A(\lambda)$

$$A_R(R) = A_0R^m + A_1R^{m-1}+\ldots+A_m = 0_{nxn}.$$

Thus, the last equality of (C.1) implies $A(\lambda)$ is divisible on the right by $(I\lambda-R)$ with quotient of (m-1)th order lambda-matrix. This provides the necessity of the theorem.

On the other hand, if $A(\lambda)$ is divisible on the right by $(I\lambda-R)$ $A_R(R)$ must vanish, which is the definition of a right solvent. Now, the sufficiency of the theorem is proven.

In a similar manner, divisibility on the left by $(I\lambda-L)$ can be shown without any difficulty. ∇∇∇

ORIGINAL PAGE IS
OF POOR QUALITY

APPENDIX D

PROOF OF THEOREM 3.11 [59]

For an arbitrary matrix A, define

$$H_1 \triangleq \frac{1}{2}(A + A^*)$$

$$H_2 \triangleq \frac{1}{2j}(A - A^*)$$

then, H_1, H_2 are Hermitian and

$$A = H_1 + jH_2.$$

According to the Rayleigh Principle, for every eigenvalue λ of A we have

$$\begin{aligned} \mathrm{Re}\lambda &= \max_{x\neq 0} \mathrm{Re}\, \frac{x^*A^*x}{x^*x} \\ &= \max_{x\neq 0} \frac{1}{x^*x}\,\frac{1}{2}(x^*Ax + x^*A^*x) \\ &= \max_{x\neq 0} \frac{x^*H_1x}{x^*x} = \lambda_{max}(H_1). \end{aligned}$$

Similarly,

$$\mathrm{Im}\lambda \leq \max_{x\neq 0} \mathrm{I_m}\, \frac{x^*Ax}{x^*x} = \lambda_{max}(H_2),$$

$$\mathrm{Im}\lambda \geq \min_{x\neq 0} \mathrm{Re}\, \frac{x^*Ax}{x^*x} = \lambda_{min}(H_1),$$

and

$$\mathrm{Im}\lambda \geq \min_{x\neq 0} \mathrm{Im}\, \frac{x^*Ax}{x^*x} = \lambda_{min}(H_2).$$

∇∇∇

ORIGINAL PAGE IS
OF POOR QUALITY

APPENDIX E

THE ACTUATOR MATRIX AND THE DAMPING MATRIX C OF EXAMPLE 2

ACTUATOR MATRIX

-0.45995D-01	-0.17384D+00	0.90963D-01	0.20991D+00	-0.13390D+00	0.24128D+00
-0.90963D-01	-0.28727D+00	0.17384D+00	0.30774D+00	-0.24128D+00	0.30087D+00
-0.13390D+00	-0.30087D+00	0.24128D+00	0.24128D+00	-0.30087D+00	0.13390D+00
-0.17384D+00	-0.20991D+00	0.28727D+00	0.45995D-01	-0.30087D+00	-0.13390D+00
-0.20991D+00	-0.45995D-01	0.30774D+00	-0.17384D+00	-0.24128D+00	-0.30087D+00
-0.24128D+00	0.13390D+00	0.30087D+00	-0.30087D+00	-0.13390D+00	-0.24128D+00
-0.26726D+00	0.26726D+00	0.26726D+00	-0.26726D+00	0.47633D-14	0.40923D-15
-0.28727D+00	0.30774D+00	0.20991D+00	-0.90963D-01	0.13390D+00	0.24128D+00
-0.30087D+00	0.24128D+00	0.13390D+00	0.13390D+00	0.24128D+00	0.30087D+00
-0.30774D+00	0.90963D-01	0.45995D-01	0.28727D+00	0.30087D+00	0.13390D+00
-0.30774D+00	-0.90963D-01	-0.45995D-01	0.28727D+00	0.30087D+00	-0.13390D+00
-0.30087D+00	-0.24128D+00	-0.13390D+00	0.13390D+00	0.24128D+00	-0.30087D+00
-0.28727D+00	-0.30774D+00	-0.20991D+00	-0.90963D-01	0.13390D+00	-0.24128D+00
-0.26726D+00	-0.26726D+00	-0.26726D+00	-0.26726D+00	-0.54748D-14	0.87707D-15
-0.24128D+00	-0.13390D+00	-0.30087D+00	-0.30087D+00	-0.13390D+00	0.24128D+00
-0.20991D+00	0.45995D-01	-0.30774D+00	-0.17384D+00	-0.24128D+00	0.30087D+00
-0.17384D+00	0.20991D+00	-0.28727D+00	0.45995D-01	-0.30087D+00	0.13390D+00
-0.13390D+00	0.30087D+00	-0.24128D+00	0.24128D+00	-0.30087D+00	-0.13390D+00
-0.90963D-01	0.28727D+00	-0.17384D+00	0.30774D+00	-0.24128D+00	-0.30087D+00
-0.45995D-01	0.17384D+00	-0.90963D-01	0.20991D+00	-0.13390D+00	-0.24128D+00

COMPUTED DAMPING MATRIX C [1]

0.7922	1.2310	1.1739	0.7593	0.2947	0.0451	0.0716	0.2240	0.2815	0.1286
-0.1622	-0.3950	-0.4049	-0.1824	0.1237	0.3199	0.3082	0.1454	-0.0181	-0.0648
1.2310	1.8941	1.7640	1.0720	0.3231	-0.0491	0.0527	0.3760	0.5468	0.3589
-0.0861	-0.4779	-0.5441	-0.2541	0.1708	0.4349	0.3895	0.1275	-0.1131	-0.1501
1.1739	1.7640	1.5468	0.7784	0.0007	-0.3243	-0.0984	0.3961	0.7352	0.6647
0.2579	-0.1752	-0.3402	-0.1746	0.1302	0.3004	0.2005	-0.0709	-0.2763	-0.2419
0.7593	1.0720	0.7784	0.1004	-0.5147	-0.6898	-0.3505	0.2559	0.7503	0.8780
0.6505	0.2909	0.0434	-0.0013	0.0602	0.0594	-0.0851	-0.2954	-0.4016	-0.2888
0.2947	0.3231	0.0007	-0.5147	-0.9230	-0.9722	-0.6135	-0.0210	0.5258	0.8109
0.7893	0.5731	0.3245	0.1428	0.0249	-0.0867	-0.2222	-0.3410	-0.3616	-0.2354
0.0451	-0.0491	-0.3243	-0.6898	-0.9722	-1.0178	-0.7821	-0.3535	0.0996	0.4199
0.5339	0.4682	0.3094	0.1445	0.0206	-0.0578	-0.1041	-0.1248	-0.1148	-0.0698
0.0716	0.0527	-0.0984	-0.3505	-0.6135	-0.7821	-0.7870	-0.6282	-0.3735	-0.1232
0.0382	0.0807	0.0365	-0.0241	-0.0351	0.0280	0.1366	0.2273	0.2401	0.1539
0.2240	0.3760	0.3961	0.2559	-0.0210	-0.3535	-0.6282	-0.7505	-0.6953	-0.5226
-0.3424	-0.2460	-0.2476	-0.2761	-0.2279	-0.0469	0.2239	0.4561	0.5123	0.3370
0.2815	0.5468	0.7352	0.7503	0.5258	0.0996	-0.3735	-0.6953	-0.7448	-0.5583
-0.3082	-0.1851	-0.2630	-0.4463	-0.5395	-0.3951	-0.0327	0.3581	0.5398	0.3917
0.1286	0.3589	0.6647	0.8780	0.8109	0.4199	-0.1232	-0.5226	-0.5583	-0.2485
0.1507	0.3195	0.1018	-0.3790	-0.8029	-0.8800	-0.5589	-0.0535	0.2975	0.2921
-0.1622	-0.0861	0.2579	0.6505	0.7893	0.5339	0.0382	-0.3424	-0.3082	0.1507
0.7247	0.9892	0.7020	-0.0208	-0.7800	-1.1643	-1.0226	-0.5427	-0.0867	0.0861
-0.3950	-0.4779	-0.1752	0.2909	0.5731	0.4682	0.0807	-0.2460	-0.1851	0.3195
0.9892	1.3891	1.2228	0.5335	-0.3280	-0.9399	-1.0753	-0.8120	-0.4214	-0.1391
-0.4049	-0.5441	-0.3402	0.0434	0.3245	0.3094	0.0365	-0.2476	-0.2630	0.1018
0.7020	1.2228	1.3755	1.0712	0.4596	-0.1790	-0.6020	-0.7178	-0.5826	-0.3133
-0.1824	-0.2541	-0.1746	-0.0013	0.1428	0.1445	-0.0241	-0.2761	-0.4463	-0.3790
-0.0208	0.5335	1.0712	1.3580	1.2536	0.7876	0.1538	-0.3777	-0.5890	-0.4206
0.1237	0.1708	0.1302	0.0602	0.0249	0.0206	-0.0351	-0.2279	-0.5395	-0.8029
-0.7800	-0.3280	0.4596	1.2536	1.6567	1.4470	0.7340	-0.0870	-0.5694	-0.4922
0.3199	0.4349	0.3004	0.0594	-0.0867	-0.0578	0.0280	-0.0469	-0.3951	-0.8800
-1.1643	-0.9399	-0.1790	0.7876	1.4470	1.4321	0.7748	-0.0989	-0.6451	-0.5641
0.3082	0.3895	0.2005	-0.0851	-0.2222	-0.1041	0.1366	0.2239	-0.0327	-0.5569
-1.0226	-1.0753	-0.6020	0.1538	0.7340	0.7748	0.2663	-0.4290	-0.8213	-0.6343
0.1454	0.1275	-0.0709	-0.2954	-0.3410	-0.1248	0.2273	0.4561	0.3581	-0.0535
-0.5427	-0.8120	-0.7178	-0.3777	-0.0870	-0.0989	-0.4290	-0.8311	-0.9675	-0.6536
-0.0181	-0.1131	-0.2763	-0.4016	-0.3616	-0.1148	0.2401	0.5123	0.5398	0.2975
-0.0867	-0.4214	-0.5826	-0.5890	-0.5694	-0.6451	-0.8213	-0.9675	-0.9090	-0.5595
-0.0648	-0.1501	-0.2419	-0.2888	-0.2354	-0.0698	0.1539	0.3370	0.3917	0.2921
0.0861	-0.1391	-0.3133	-0.4206	-0.4922	-0.5641	-0.6343	-0.6536	-0.5595	-0.5273

[1] Two consecutive lines make a row of the matrix C.

APPENDIX F
MATRICES T, P, $\hat{A}$ AND Q_1 OF EXAMPLE 3

TRANSFORMATION MATRIX T

0.63878	0.64973	0.29040	-0.07067	-0.22765	-0.16931	0.00000	0.00000	0.00000	0.00000	0.00000	0.00000
-0.03087	0.16995	0.44934	0.60598	0.54966	0.31416	0.00000	0.00000	0.00000	0.00000	0.00000	0.00000
0.00000	0.00000	0.00000	0.00000	0.00000	0.00000	0.63878	0.64973	0.29040	-0.07067	-0.22765	-0.16931
0.00000	0.00000	0.00000	0.00000	0.00000	0.00000	-0.03087	0.16995	0.44934	0.60598	0.54966	0.31416
-0.48970	0.07674	0.70840	-0.49496	-0.34115	-0.37611	0.00000	0.00000	0.00000	0.00000	0.00000	0.00000
0.35598	-0.67761	0.45947	0.24175	-0.37430	-0.06682	0.00000	0.00000	0.00000	0.00000	0.00000	0.00000
0.41620	-0.28422	0.02851	-0.43716	0.70543	-0.23757	0.00000	0.00000	0.00000	0.00000	0.00000	0.00000
0.22639	-0.05608	-0.00068	-0.36504	-0.06002	0.89774	0.00000	0.00000	0.00000	0.00000	0.00000	0.00000
0.00000	0.00000	0.00000	0.00000	0.00000	0.00000	-0.48970	0.07674	0.70840	-0.49496	-0.34115	-0.37611
0.00000	0.00000	0.00000	0.00000	0.00000	0.00000	0.35598	-0.67761	0.45947	0.24175	-0.37430	-0.06682
0.00000	0.00000	0.00000	0.00000	0.00000	0.00000	0.41620	-0.28422	0.02851	-0.43716	0.70543	-0.23757
0.00000	0.00000	0.00000	0.00000	0.00000	0.00000	0.22639	-0.05608	-0.00068	-0.36504	-0.06002	0.89774

FULL RICCATI MATRIX P

2.52410	2.71587	1.48925	0.16516	-0.50212	-0.44334	-0.18837	-0.35650	-0.46512	-0.47262	-0.37416	-0.20065
2.71587	3.13700	2.09668	0.82046	0.03452	-0.15064	-0.07987	-0.21456	-0.34313	-0.39015	-0.32834	-0.18143
1.48925	2.09669	2.01617	1.57661	1.02652	0.48953	0.17150	0.17864	0.08763	-0.00641	-0.04989	-0.03908
0.16516	0.82046	1.57661	1.93427	1.68725	0.94771	0.35522	0.48249	0.44037	0.32335	0.19771	0.09000
-0.50212	0.03452	1.02652	1.68725	1.63813	0.96164	0.36616	0.52326	0.51355	0.41084	0.27314	0.13214
-0.44334	-0.15064	0.48953	0.94771	0.96164	0.57383	0.21972	0.31946	0.32076	0.26291	0.17855	0.08761
-0.18837	-0.07987	0.17150	0.35522	0.36616	0.21972	0.99512	1.30380	1.12350	0.76259	0.42577	0.17938
-0.35650	-0.21456	0.17864	0.48249	0.52326	0.31946	1.30380	1.78932	1.65863	1.24163	0.77487	0.35826
-0.46512	-0.34313	0.08763	0.44037	0.51355	0.32076	1.12350	1.65863	1.69793	1.41947	0.98015	0.46013
-0.47262	-0.39015	-0.00641	0.32335	0.41084	0.26291	0.76259	1.24163	1.41947	1.31065	0.97575	0.50025
-0.37416	-0.32834	-0.04989	0.19771	0.27314	0.17855	0.42577	0.77487	0.98015	0.97575	0.76297	0.40054
-0.20065	-0.18143	-0.03908	0.09000	0.13214	0.08761	0.17938	0.35826	0.46013	0.50025	0.40054	0.21960

CLOSED-LOOP SYSTEM MATRIX $\hat{A}$

0.00000	0.00000	0.00000	0.00000	0.00000	0.00000	1.00000	0.00000	0.00000	0.00000	-0.00000	-0.00000
0.00000	0.00000	0.00000	0.00000	0.00000	0.00000	0.00000	1.00000	0.00000	-0.00000	0.00000	0.00000
0.00000	0.00000	0.00000	0.00000	0.00000	0.00000	0.00000	0.00000	1.00000	-0.00000	0.00000	0.00000
0.00000	0.00000	0.00000	0.00000	0.00000	0.00000	0.00000	-0.00000	-0.00000	1.00000	0.00000	-0.00000
0.00000	0.00000	0.00000	0.00000	0.00000	0.00000	-0.00000	0.00000	0.00000	0.00000	1.00000	-0.00000
0.00000	0.00000	0.00000	0.00000	0.00000	0.00000	-0.00000	0.00000	0.00000	-0.00000	-0.00000	1.00000
-9.32442	4.66175	-0.16651	0.01116	0.09350	0.07343	-0.12025	0.09912	0.67595	0.45492	0.63544	0.36836
4.76757	-11.24234	5.58071	0.00800	0.06699	0.05261	-0.08615	0.07102	0.32593	0.46429	0.45527	0.26391
0.07700	6.08028	-12.96048	6.99735	-0.02219	-0.01743	0.02854	-0.02353	-0.10798	-0.16044	-0.15082	-0.08743
0.32781	0.34178	7.16825	-15.01128	7.90552	-0.07420	0.12151	-0.10016	-0.45967	-0.66562	-0.64209	-0.37221
0.37667	0.39273	0.19332	7.98704	-17.10856	8.91474	0.13962	-0.11509	-0.52619	-0.76483	-0.73779	-0.42769
0.23422	0.24420	0.12021	-0.00806	8.93249	-19.05301	0.08682	-0.07156	-0.32843	-0.48601	-0.45877	-0.26594

Q1 OF ORIGINAL SYSTEM

0.40899	0.40979	0.17163	-0.06385	-0.16239	-0.11785	0.00000	0.00000	0.00000	0.00000	0.00000	0.00000
0.40979	0.45103	0.26505	0.05707	-0.05446	-0.05661	0.00000	0.00000	0.00000	0.00000	0.00000	0.00000
0.17163	0.26505	0.28624	0.25177	0.18097	0.09200	0.00000	0.00000	0.00000	0.00000	0.00000	0.00000
-0.06385	0.05707	0.25177	0.37221	0.34929	0.20234	0.00000	0.00000	0.00000	0.00000	0.00000	0.00000
-0.16239	-0.05446	0.18097	0.34929	0.35417	0.21129	0.00000	0.00000	0.00000	0.00000	0.00000	0.00000
-0.11785	-0.05661	0.09200	0.20234	0.21129	0.12736	0.00000	0.00000	0.00000	0.00000	0.00000	0.00000
0.00000	0.00000	0.00000	0.00000	0.00000	0.00000	0.40899	0.40979	0.17163	-0.06385	-0.16239	-0.11785
0.00000	0.00000	0.00000	0.00000	0.00000	0.00000	0.40979	0.45103	0.26505	0.05707	-0.05446	-0.05661
0.00000	0.00000	0.00000	0.00000	0.00000	0.00000	0.17163	0.26505	0.28624	0.25177	0.18097	0.09200
0.00000	0.00000	0.00000	0.00000	0.00000	0.00000	-0.06385	0.05707	0.25177	0.37221	0.34929	0.20234
0.00000	0.00000	0.00000	0.00000	0.00000	0.00000	-0.16239	-0.05446	0.18097	0.34929	0.35417	0.21129
0.00000	0.00000	0.00000	0.00000	0.00000	0.00000	-0.11785	-0.05661	0.09200	0.20234	0.21129	0.12736

ORIGINAL PAGE IS OF POOR QUALITY