N84-18682

NASA Contractor Report 172260

POSTOP: Postbuckled Open-Stiffener Optimum Panels-User's Manual

S. B. Biggers
J. N. Dickson

LOCKHEED-GEORGIA COMPANY
A Division of Lockheed Corporation
Marietta, Georgia

Contract NAS1-15949
January 1984

National Aeronautics and
Space Administration

Langley Research Center
Hampton, Virginia 23665

FOREWORD

This report is prepared by the Lockheed-Georgia Company under contract NAS1-15949, "Advanced Composite Structural Design Technology for Commercial Transport Aircraft," and serves as a user's manual for a computer program prepared for the analysis and sizing of stiffened composite panels. This work was performed under Task Assignment No. 5 of the contract. The program is sponsored by the National Aeronautics and Space Administration, Langley Research Center (NASA/LaRC). Dr. James H. Starnes is the Project Engineer for NASA/LaRC. John N. Dickson is the Program Manager for the Lockheed-Georgia Company.

In addition to the authors the following Lockheed specialist/consultants made major contributions to the material presented.

L. W. Liu	Programming
Dr. J. T. S. Wang (Georgia Tech.)	Analysis

CONTENTS

	Page
SUMMARY	1
INTRODUCTION	1
SCOPE OF POSTOP	2
Geometry	2
Loading Conditions	4
Analysis	4
Sizing	5
PROGRAM OPERATION	8
USE OF PROGRAM	8
Sizing Data	13
Analysis Data	16
Comments on Selected Input Data	22
Output	29
EXAMPLES	32
REFERENCES	95

POSTOP: Postbuckled Open-STiffener Optimum Panels - User's Manual

Sherrill B. Biggers and John N. Dickson
Lockheed-Georgia Company
Marietta, Georgia

SUMMARY

Instructions for the use of the computer program POSTOP for the analysis or sizing of stiffened panels are described. The panel is stiffened with longitudinal, open-section stiffeners. Composite materials may be used. Stiffness, stability and strength analyses are performed. Sizing of the panel geometry and laminate configurations may be performed. This report serves as a User's Manual for POSTOP.

INTRODUCTION

The computer program POSTOP has been developed to serve as an aid in the analysis and optimum sizing of stiffened panels. This analysis and sizing code was developed specifically for longitudinally stiffened composite panels loaded in the postbuckling range. Buckling resistant panels, or panels made of isotropic materials may also be treated if the assumptions and analytical techniques outlines in Reference 1 are appropriate for the particular application. In summary, POSTOP may be used to analyze or size panels made of linear elastic materials with configurations normally found in fuselage, wing, or empennage covers.

This report gives a general description of the capabilities and limitations of the code. Detailed instructions required to use the program are presented. Several example problems are included. An understanding of the analytical and sizing procedures described in Reference 1 will aid in the effective use of the code.

SCOPE OF POSTOP

A general description of the geometric and loading capabilities and limitations of POSTOP is given below. A sketch of a typical panel and loading is shown in Figure 1. An overview of the analysis and sizing methodology used is also presented. Detailed discussion of the various analytical routines and sizing procedures are presented in Reference 1.

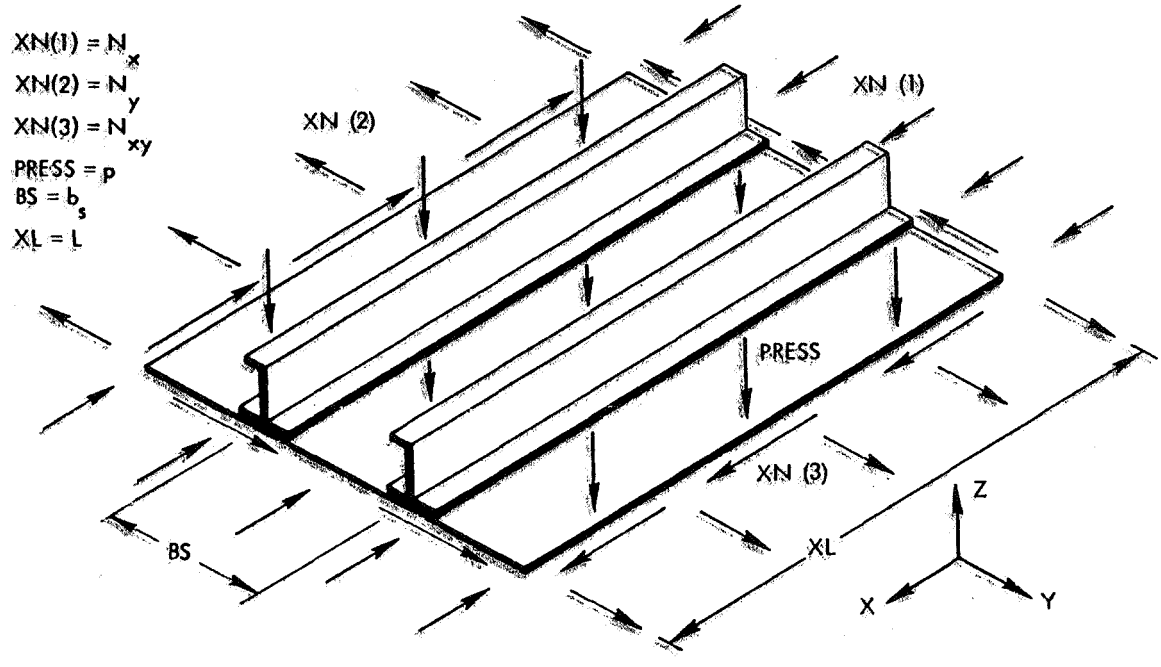

Figure 1. Typical Stiffened Panel and Loading

GEOMETRY

The panel may be stiffened with attached stiffeners or integral stiffeners. The stiffener geometry is limited to any shape that may be formed by deleting flanges from an I-section (for example, I, ⅃, ⅂, ⅃, ⊥, Γ, etc.). The stiffener geometry is shown in Figure 2. The stiffeners are assumed to be identical and prismatic.

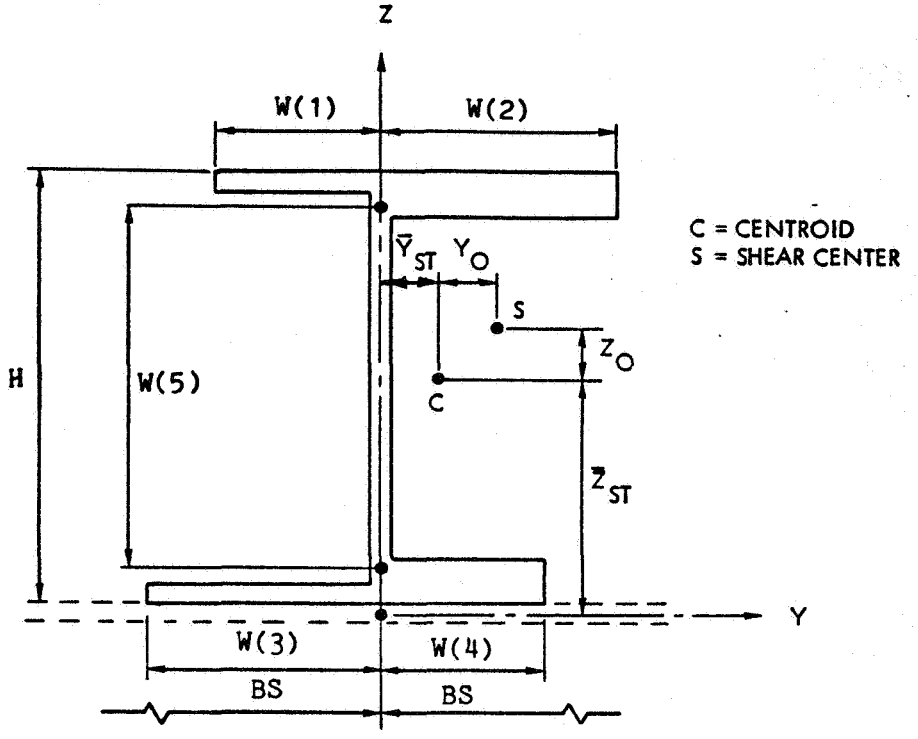

Figure 2. Stiffener Geometry

Although unsymmetrical stiffeners may be specified, the attached flanges should be symmetrical about the web if the stringer is bonded to or cocured with the skin as the primary attachment method. The tendency of the skin to separate from the stiffener can be minimized only if symmetric attached flanges are specified. The skin and each element of the stiffener must be specified as balanced laminates. Normally, midplane symmetry is also maintained in all laminates. For unsymmetrical laminates, approximations are used to eliminate bending-extensional coupling. Any fiber orientation may be specified for each orthotropic lamina from which the skin and stiffeners are composed.

The panel geometry is assumed to be repetitive in the longitudinal and transverse directions. The panel length should be greater than the stiffener spacing. Transverse curvature effects are small in large radius structures such as transport fuselages with small stiffener spacing and are conservatively neglected in POSTOP.

LOADING CONDITIONS

Applied in-plane loads may be a combination of biaxial compression (or tension) and shear. Failure modes considered in the program and simplifications made in the theoretical development of some of the analysis routines, however, are based on the assumption that longitudinal compression is the dominant loading. Although no actual limitations have yet been established, it is anticipated that when the shear load (N_{xy}) does not exceed 50 percent of the longitudinal compression load (N_x) any inaccuracies resulting from simplifying assumptions in the analysis procedures should be small. In addition to in-plane loads, normal pressure loading, thermal loading and initial eccentricities may be applied. Eccentricities in the form of an initial bow and/or an offset of the applied longitudinal load relative to the section centroid may be specified. If an initial bow is present, analyses are performed for both positive (inward) and negative (outward) initial curvatures. Up to five separate load cases may be imposed in each analysis or sizing run. Panel sizing insures that all margins of safety are within specified bounds for all loading cases.

ANALYSIS

The analyses required for the design of stiffened panels may be broadly grouped into categories of stiffness, material strength, and stability computations. Specific requirements and/or allowables within these areas may vary for different load cases. For example, skin buckling may be permitted for one load case and not allowed for another. Load cases with different temperatures may require that different material properties or allowables be use in the analyses for the various load cases. POSTOP will consider these multiple requirements associated with multiple load cases. In all analyses, the materials are assumed to be linear elastic.

Stiffness requirements that may be directly imposed in POSTOP are the axial and shear stiffnesses of the unbuckled stiffened panel.

Strength analyses begin with the determination of the longitudinal strain and change in curvature in the panel. Reductions in panel axial and bending stiffnesses due to postbuckling of the skin are made in an itera-

tive procedure that accounts for changes in curvature due to eccentricities and normal pressure. Beam-column theory is used to account for the interaction of load, curvature, and stiffness changes due to skin buckling. On completion of the iterative strain/curvature determinations, strains (or stresses) are determined in the skin and stiffener elements for each ply or lamina. Local bending and membrane strains are evaluated at critical locations in the buckled skin. Material strength margins may be based on the maximum strain criterion or on the Tsai-Hill criterion. First-ply failure constitutes failure in both cases. Strain limitations for durability and damage tolerance requirements may be imposed on membrane strains, exclusive of thermal strains, in the skin. An analysis is included to evaluate the stress state in the interface between the skin and the bonded or cocured stiffener attached flanges. The Tsai-Hill criterion is used to compute that margin.

Stability analyses include local and panel buckling computations. Stiffener local buckling is not allowed. The initial buckling load of the skin, restrained along its long edges by the stiffener, is computed. If the skin is allowed to buckle, no local buckling margin of safety is computed for the skin but the initial buckling load is nevertheless required as the starting point in the determination of the postbuckled behavior of the skin. Buckling of the panel as a wide column is prevented. Here the tangent stiffness of the buckled skin is used in computing the section bending stiffness. Shear flexibility of the section is accounted for in the buckling analysis. Coupled torsional/flexural buckling of the stiffeners is likewise prevented. In this analysis the coupled differential equations of the stiffener, as restrained by the membrane and bending stress resultants in the buckled skin at the skin/stiffener intersection, are used to form the eigenvalue problem. Buckling loads for a number of wavelengths are determined.

SIZING

Panel sizing begins with the definition by the user of which parameters of the panel are to be design variables and which parameters are to remain fixed or be linked linearly to other design variables. The design

variables may include stiffener element widths, stiffener spacing, and up to 20 lamina thicknesses. Panel length may also be chosen as a design variable although it is normally fixed. Upper and lower bounds may be set for all design variables.

The optimizer (CONMIN) uses a nonlinear mathematical programming technique that assumes all design variables are continuous. Since lamina thicknesses can actually only be provided in integer multiples of available ply thicknesses, two sizing cycles are normally required when lamina thicknesses are design variables. In the first cycle, all design variables are allowed to seek their optimum values. The lamina thicknesses are then rounded up or down to practical values by the user. In the second cycle, only stiffener element widths and/or spacing are allowed to vary. The design produced in this way, while not guaranteed to be a global optimum, should be close enough to optimum for most practical purposes.

A list of the design requirements that can be specified and their associated mode numbers are given in Figure 3. Failure to meet requirements such as material strength and stiffener torsional stability imply structural failure. Failure to meet other requirements such as panel stiffnesses, skin buckling or skin layup design constraints do not necessarily imply a structural failure. However, in all cases each mode has an associated margin of safety that is computed by

$$MS = \frac{\text{ALLOWABLE VALUE}}{\text{ACTUAL VALUE}} - 1$$

or,

$$MS = \frac{\text{ACTUAL VALUE}}{\text{MIN. REQUIRED VALUE}} - 1$$

During sizing, all margins of safety are formulated as constraint functions whose values must remain between user-specified bounds. Normally all margins of safety are required to be positive, or greater than some minimum value, and have no upper limit.

MODE NUMBER	DESIGN REQUIREMENT
1	MINIMUM PANEL SHEAR STIFFNESS
2	MINIMUM PANEL LONGITUDINAL STIFFNESS
3	SKIN STRENGTH
4	SKIN DURABILITY AND DAMAGE TOLERANCE STRAIN LIMITATIONS
5	LEFT FREE FLANGE STRENGTH
6	RIGHT FREE FLANGE STRENGTH
7	STIFFENER WEB STRENGTH
8	STIFFENER LOCAL BUCKLING
9	SKIN LOCAL BUCKLING
10	STIFFENER ROLLING
11	STIFFENER TORSIONAL/FLEXURAL BUCKLING
12	WIDE COLUMN (EULER) BUCKLING
13	SKIN/STIFFENER INTERFACE STRESSES
14	MINIMUM LONGITUDINAL MATERIAL IN SKIN
15	MINIMUM INTERMEDIATE MATERIAL IN SKIN
16	MINIMUM TRANSVERSE MATERIAL IN SKIN

Figure 3. Design Requirements and Mode Numbers

PROGRAM OPERATION

A flow chart of the basic operations in POSTOP is shown in Figure 4. The program is composed of three major routines: COPES, CONMIN and ANALIZ. COPES serves as the main program. It reads sizing data and calls ANALIZ to read analysis data. Data is output as specified by the user. COPES calls ANALIZ to compute margins of safety and objective function values. If only a single analysis is specified, the results are output and control returns to the user. If sizing is desired, COPES formulates the margins of safety in proper constraint form and calls CONMIN to calculate gradients to the constraints and objective function. CONMIN does this by calling ANALIZ for designs in which all variables are slightly changed one at a time. Based on this information, CONMIN determines an improved design. ANALIZ is called again and convergence of the optimization procedure is checked. The sizing process continues until convergence to an optimum design is achieved or the maximum number of cycles is exceeded. Results are output and control returns to the user. The COPES/CONMIN programs are described in detail in References 2 and 3. The routines composing ANALIZ are described in Reference 1.

USE OF PROGRAM

POSTOP can be used to perform an analysis of a specific panel or to size an optimum panel starting from an initial design. The COPES program has capabilities beyond the single analysis or sizing options used in POSTOP. These capabilities include sensitivity analysis, two-variable function space analysis, optimum sensitivity analysis, and optimization using approximation techniques. The routines required to perform these additional options are available in the POSTOP system. However, use of POSTOP in only the analysis or optimization modes is described here. Reference 2 describes the additional input required and the application of the additional options in COPES.

The input required to operate POSTOP may be divided into two major sections: sizing data and analysis data. Each data set consists of a sequence of logical free-form input records. Normally each record is a line of data or a data card, although it is possible to place multiple,

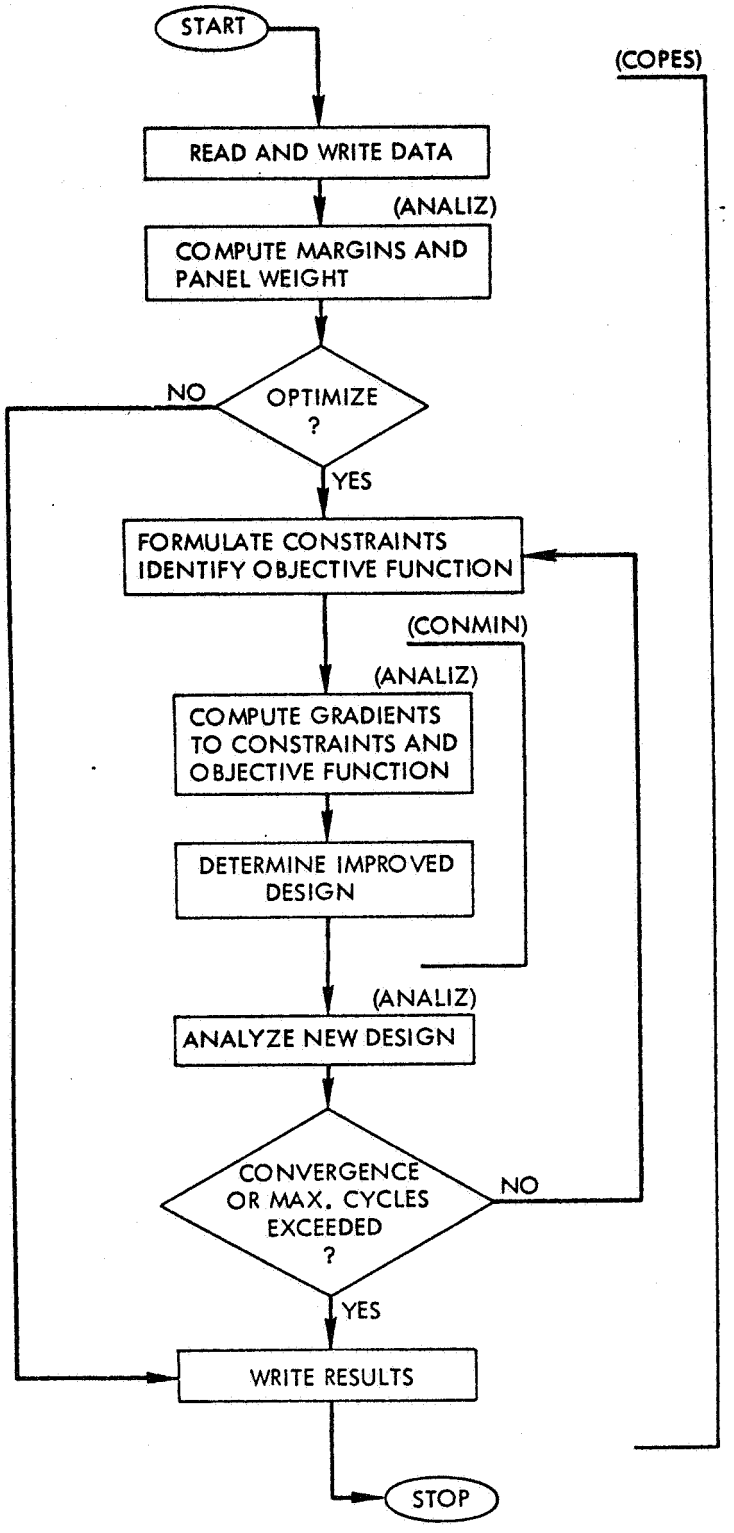

Figure 4. Flow Chart of POSTOP Program Operation

brief records on a single line or card. General descriptions of the input records and their sequence are shown in Figures 5 and 6 for the sizing and analysis data respectively. Each input record is referred to by a number ranging from S1 to S12 for the sizing data and from A1 to A18 for the analysis data.

Input record S1 contains the case title defined by any Hollerith text. Record S12 defines the end of the sizing data and contains only the word SIZ. Record A18 defines the end of all data and contains only the word END. Each of the other input records contains a number of numerical data fields followed by optional comments which are ignored by the program. Numerical data may be integer data or floating point.

The field width for integer data cannot exceed 5 characters, not counting leading blanks or field delimiters. Floating point data must contain a decimal point and may contain a sign and/or a FORTRAN "E" type exponent. The total field width may not exceed 10 characters including the decimal point, sign and exponent, but not counting leading blanks or field delimiters. Variable names starting with I, J, K, L, M, or N require integer data and all other variables require floating point data.

A numerical data field may begin with any number of blanks (leading blanks) and is terminated by either column 72 of a card or line, or with one of the following delimiters:

	blank
,	comma
/	slash
$	dollar sign

Blanks are ignored everywhere except when they occur between two numerical data fields. In this case the first field is terminated by the blank. Therefore input numbers must never contain embedded blanks. A blank card or line is not ignored but rather produces a single logical record.

A comma is commonly used to terminate a data field when the logical record contains multiple inputs. A comma after the last data field on a card or line indicates that the record continues with the next card or line. Otherwise the record is terminated when the end of data on a card or line is reached. Successive commas may be used to generate zero values of integer variables in an input list. The following records are equivalent:

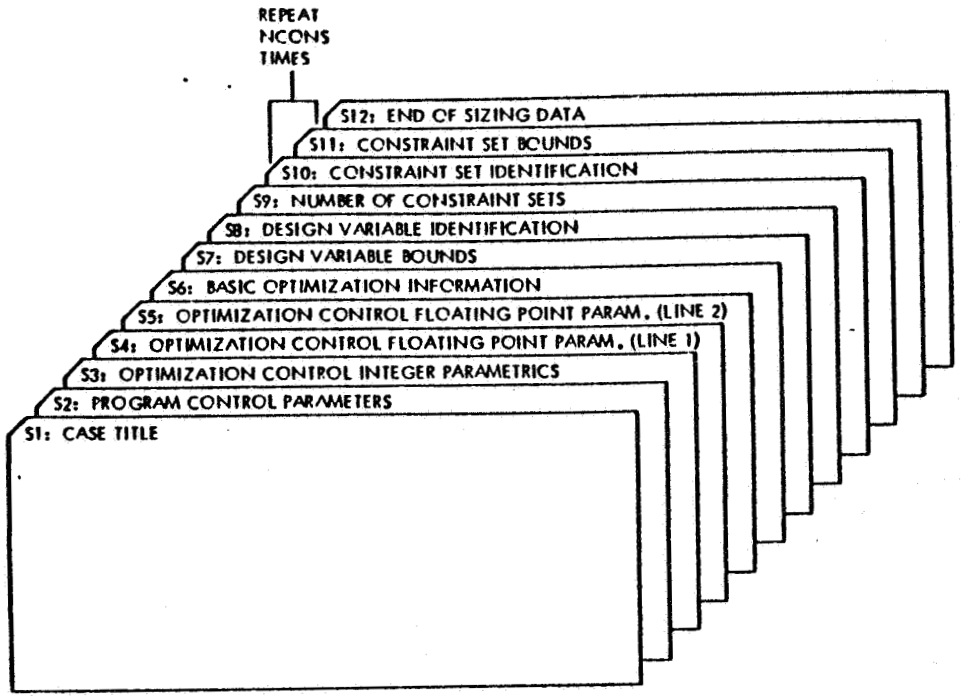

Figure 5. Sizing Data Setup

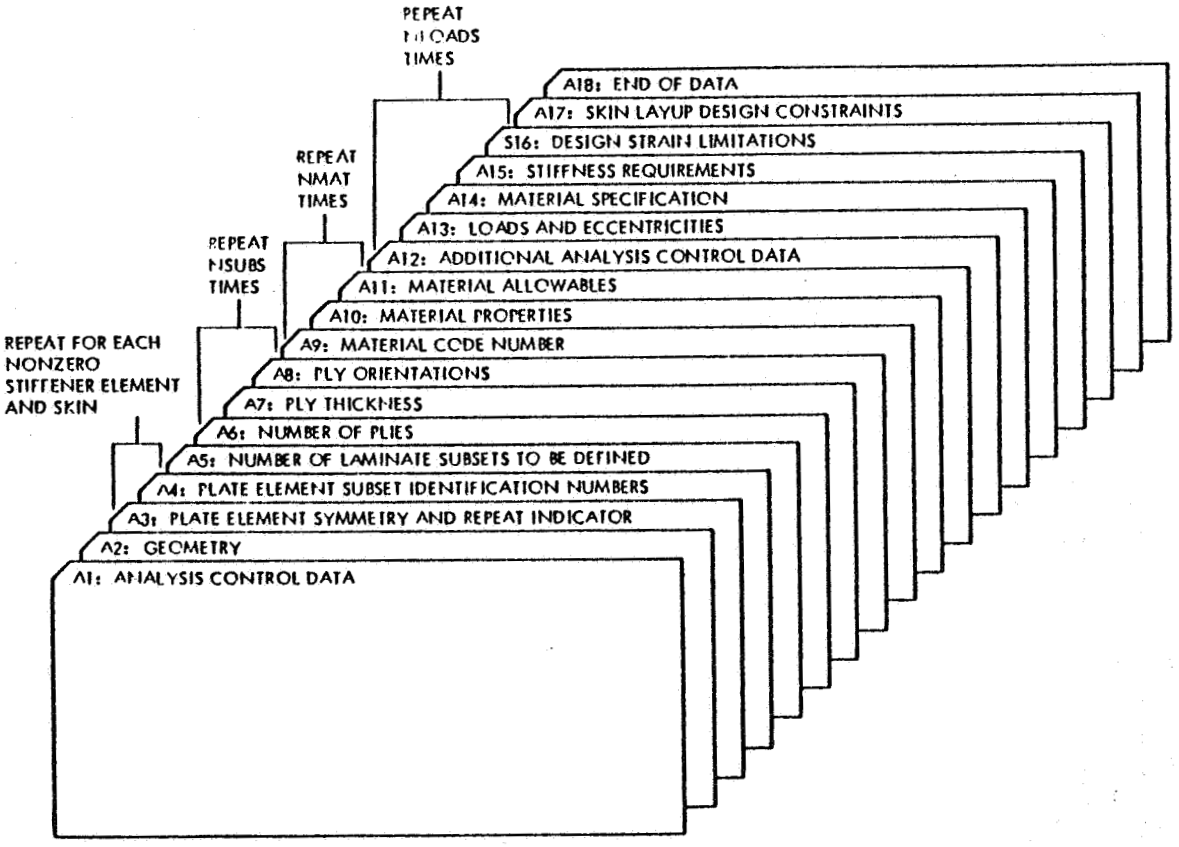

Figure 6. Analysis Data Setup

(a) 3 0 0 4. 50

(b) 3, 0, 0, 4., 50

(c) 3,,, 4., 50

(d) 3, 0, 0,
4.,
50

A slash may be used to terminate a logical record. Any data field following a slash begins a new record. Thus, several records may be placed on a single card or line if the records are separated by slashes. A slash following a comma prevents continuation and terminates the record.

A dollar sign signals the end of data on a card or line and the space following the dollar sign may be used for comments. A dollar sign directly following a data field or data field and blanks signifies the end of the logical record. A dollar sign following a comma or a comma and blanks allows continuation of the logical record on the next card or line.

Comment cards or lines may be inserted in the data set at any location after the case title on the first card or line. Comment cards are signified by a "C" in column 1.

The main transfer of input and computed data between COPES and ANALIZ occurs through the common block denoted GLOBCM. The locations in GLOBCM and the corresponding parameters in ANALIZ are listed in Figure 7. The margins of safety are defined in Figure 3. The stiffener dimensions are defined in Figure 2. XL is the panel length. The TPLY (I) are lamina thicknesses. Weight is the panel weight per unit plan area.

GLOBCM LOCATION	1-16	21	22	23	24	25	26	27	31-50	51
ANALIZ PARAMETER	Margins 1-16	W(1)	W(2)	W(3)	W(4)	H	BS	XL	TPLY(1) to TPLY(20)	WEIGHT

Figure 7. Locations of Analysis Parameters in GLOBCM.

Detailed descriptions of the input quantities required for each logical record in the sizing and analysis data are given in the following sections. Explanatory comments on selected records are given in a subsequent section.

SIZING DATA

Input records numbered from S1 to S12 specify data required for panel sizing. If only a single analysis of a particular panel is desired, records S3 through S11 are optional. A list of the twelve sizing records and definitions of the input parameters of each record are given below.

S1 - Case Title

Parameter	Description
TITLE	Any Hollerith text up to 72 characters

S2 - Program Control Parameters

Parameter	Description
NCALC	1 - Single analysis only (may omit other items except S12) 2 - Optimize
NDV	Number of independent design variables.
IPNPUT	1 - Sizing data and title page printed. 2 - Sizing data and title page not printed

S3 - Optimization Control Integer Parameters

Parameter	Description
IPRINT	0 - No print during optimization. 1 - Print initial and final optimization information. 2 - Print above plus objective function and design variables at each iteration.

3 - Print above plus constraints, direction vector and move parameters.
4 - Print above plus gradient information.
5 - Print above plus one-dimensional search information.

ITMAX	Maximum number of optimization iterations. Default = 20
ICNDIR	Conjugate direction restart parameter. Set = NDV + 1 but $\leq$ 10.
NSCAL	Number of iterations allowed between design variable scaling. Set = NDV + 1
ITRM	Number of consecutive iterations which must satisfy termination criterion. Default = 3
LINOBJ	Set = 0
NACMX1	One plus maximum number of active constraints anticipated. Set $\geq$ 10

S4 - Optimization Control Floating Point Parameters (Line 1)

Parameter	Description
FDCH	Relative change in design variables in calculating finite difference gradients. Default = 0.01
FDCHM	Minimum absolute change in design variables in calculating finite difference gradients. Default = 0.00001.

S5 - Optimization Control Floating Point Parameter (Line 2)

Parameter	Description
DELFUN	Minimum relative change in objective function to indicate convergence. Default = 0.001
DABFUN	Minimum absolute change in objective function to indicate convergence. Default = 0.00001 times initial objective function.

S6 - Basic Optimization Information

Parameter	Description
NDVTOT	NDV + number of linked variables.
IOBJ	Objective function location in common block GLOBCM. Set = 51 for minimum-weight.

SGNOPT Set = +1.0 for maximization. Set = -1.0 for minimization.

S7 - Design Variable Bounds

Input lower and upper bounds, one line for each of the NDV independent design variables, in the following order: W(1), W(2), W(3), W(4), H, BS, XL, TPLY (1),...TPLY(20).

Parameter	Description
VLB	Lower bound, Set $\geq$ 0.0
VUB	Upper bound, Set = 1.E16 if no upper bound.

S8 - Design Variable Identification

Input one line for each of the NDVTOT design variables.

Parameter	Description
NDSGN	Number from 1 to NDV which names independent design variable or defines independent variables to which linked variable is attached.
IDSGN	Location in the common block GLOBCM of each of the NDVTOT design variables.
AMULT	Constant multiplier on this design variable. The value of the variable will be the value of the design variable, NDSGN, times AMULT. Default = 1.0.

S9 - Number of Constraint Sets

Two or more adjacent parameters in the common block GLOBCM with the same bounds form a constraint set.

Parameter	Description
NCONS	Number of constraint sets.

S10* - Constraint Set Identification

Parameter	Description
ICON	First position in GLOBCM corresponding to constraint set.
JCON	Last position in GLOBCM corresponding to constraint set.
KCON	0 - Nonlinear constraint set. 1 - Linear constraint set.

S11* - Constraint Set Bounds

Parameter	Description
BL	Lower bound on constraint set.
BU	Upper bound on constraint set. Set = +1.0E16 if no upper bound.

*Repeat the set S10 and S11 for each of NCONS constraint sets.

S12 - End of Sizing Data

Parameter	Description
SIZ	Input the word SIZ beginning in column 1.

ANALYSIS DATA

Input records numbered from A1 to A18 specify the data required to analyze a particular panel. This data also defines the panel design that serves as a starting point for the sizing process. Included in these records are data specifying the panel geometry, laminate designs, material parameters, loading conditions, design requirements, and analysis controls. A list of the 18 analysis records and definitions of the input parameters of each record are given below.

A1 - Analysis Control Data

Parameter	Description
IWRITE	0 - Minimum analysis printout. Use during optimization. 1 - Maximum analysis printout. Do not use during optimization.
NLOADS	Number of load cases. Maximum = 5
NMAT	Number of materials to be defined. Maximum = 10
NSTMX	Maximum number of stiffeners per transverse buckle full wavelength in torsional/flexural mode. Default = 2

NITER	Number of iterations to be used in determining stiffener local buckling load. Default = 12
NMAX	Maximum number of half-waves to be checked in stiffener local buckling calculations. Default = 2 * XL/(skin initial buckling wavelength) for blade, = 2 * XL/W(5) for stiffener with free flange.

A2 - Geometry

Parameter	Description
W(1)	Left free flange width.
W(2)	Right free flange width.
W(3)	Left attached flange width.
W(4)	Right attached flange width.
H	Stiffener height.
BS	Stiffener spacing.
XL	Panel length.

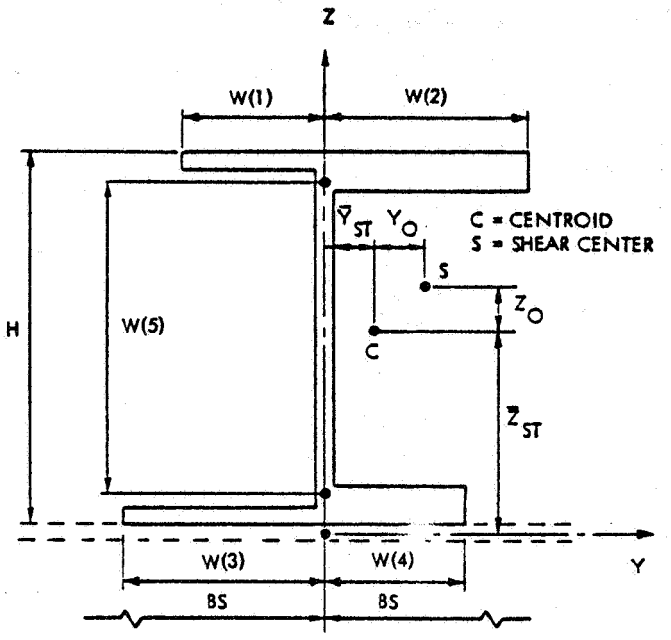

A3* - Plate Element Symmetry and Repeat Indicator

Parameter	Description
NSYM	0 - No Symmetry. 1 - Element lay-up is symmetrical with respect to middle surface. Only lower half of element is specified.
NLS	Number of subset identifications to be read on next line. Maximum = 30
NREP	Number of times NLS subsets are to be repeated.

A4* - Plate Element Subset Identification Numbers

Parameter	Description
LS	NLS subset identifications starting at lower surface of element. A negative sign in front of the subset identification number indicates that ply orientations are to be read in reversed order.

*Repeat the set A3 and A4 for each nonzero plate element in the order: W(1), W(2), W(3), W(4), web, skin.

A5 - Number of Laminate Subsets to be Defined

Laminate subsets are defined to simmplify and avoid duplication of input. Each subset may have up to 10 plies. The material code number and ply thickness must be the same for all plies in the subset.

Parameter	Description
NSUBS	Number of subsets to be defined. Maximum number = 20.

A6* - Number of Plies

Parameter	Description
NPLY	Number of plies in subset. Maximum number = 10.

A7* - Ply Thickness

Parameter	Description
TPLY	Thickness of each ply in subset.

A8* - Ply Orientations

Parameter	Description
THETA	Orientations relative to stiffener direction (degrees) $-90 \leq \theta \leq 90$; NPLY values

*Repeat the set A6, A7, and A8 for each of the NSUBS subsets.

A9** - Material Code Number

Parameter	Description
MAT	1 - Isotropic materials 2 - Orthotropic (2-D)

A10** - Material Properties

If MAT = 1, read in isotropic properties (5 values) in sequence

Parameter	Description
E	Elastic modulus
G	Shear modulus
ANU	Poisson's ratio
ALPHA	Coefficient of thermal expansion
RHO	Density

If MAT = 2, read in 2-D orthotropic properties (7 values)

Parameter	Description
E11	Elastic modulus (fiber direction)
E22	Elastic modulus (transverse direction)
G12	Shear modulus (in-plane)
ANU12	Major Poisson's ratio
ALPHA1	Coefficient of thermal expansion (fiber direction)
ALPHA2	Coefficient of thermal expansion (transverse direction)
RHO	Density

A11 - Material Allowables**

If MAT = 1, read in isotropic material allowables (6 values; 3 strains and 3 stresses) in sequence (all values positive).

Parameter	Description
ϵ_T	Tensile strain
ϵ_C	Compressive strain
γ	Shear strain
σ_T	Tensile stress
σ_C	Compressive stress
τ	Shear stress

If MAT = 2, read in orthotropic material allowables (10 values; 5 strains and 5 stresses) in sequence (all values positive).

Parameter	Description
ϵ_{1T}	Tensile strain (fiber direction)
ϵ_{1C}	Compressive strain (transverse direction)
ϵ_{2T}	Tensile strain (fiber direction)
ϵ_{2C}	Compressive strain (transverse direction)
γ	Shear strain (in-plane)

σ_{1T}	Tensile stress (fiber direction)
σ_{1C}	Compressive stresss (transverse direction)
σ_{2T}	Tensile stress (fiber direction)
σ_{2C}	Compressive stress (transverse direction)
τ	Shear stress (in-plane)

**Repeat the set A9, A10, A11 for each of the NMAT materials.

A12* - Additional Analysis Control Data

Parameter	Description
MOPT	1 - Maximum strain criterion used for skin and stiffener strength 2 - Tsai-Hill criterion used for skin and stiffener strength
ICLAMP	0 - Panel ends simply supported 1 - Panel ends clamped for calculation of moment due to pressure only
NOBUCK	0 - Skin is allowed to buckle 1 - Skin is not allowed to buckle
ISEP	0 - Skin/stiffener interface stress analysis not performed 1 - Skin/stiffener interface stress analysis performed
NPX	Number of longitudinal locations per quarter-wavelength at which interface stresses are calculated. Default = 2.
NPY	Number of transverse locations starting at the web, across one attached flange width, W(3) or W(4), at which interface stresses are calculated. Default = 2. Maximum = 21.
NSEP	Number of transverse shape functions used in interface stress analysis. Default = 10. Maximum = 20.

A13* - Loads and Eccentricties

Parameter	Description
XN(1)	Axial load per unit width (tension positive).
XN(2)	Transverse load per unit width (tension positive).
XN(3)	Shear load per unit width.
PRESS	Normal pressure (internal positive).
DELT	Temperature change from unstressed state (temperature rise positive).

DEL	Ratio of initial bow to panel length (program checks ±DEL).
DELNX	Eccentricity of axial load measured positive from outer surface of skin. Default = load at centroid.

A14* - Material Specification

Parameter	Description
MATNO	Material number from the material list to be used for each laminate subset. Read NSUBS values.

A15* - Stiffness Requirements

Parameter	Description
GTREQ	Required skin shear stiffness per unit width.
ETREQ	Required panel extensional stiffness per unit width.

A16* - Design Strain Limitations

Input positive values. Use limit allowables with limit loads. Use ultimate allowables with ultimate loads. Zero values default to material allowable strains.

Parameter	Description
STRLIM(1)	Fiber direction tesnion membrane strain allowable in skin.
STRLIM(2)	Fiber direction compression membrane strain allowable in skin.
STRLIM(3)	Transverse direction tension membrane strain allowable in skin.
STRLIM(4)	Transverse direction compression membrane strain allowable in skin.

*Repeat the set A12 through A16 for each of the NLOADS load cases.

A17 - Skin Layup Design Constraints

Minimum proportions of skin material oriented in three zones shown at right may be specified. The angle $\bar{\theta}$, THETAA, is commonly zero but may be any small angle.

Parameter	Description
THETAA	Small positive angle (degrees) defining longitudinal and transverse zones.

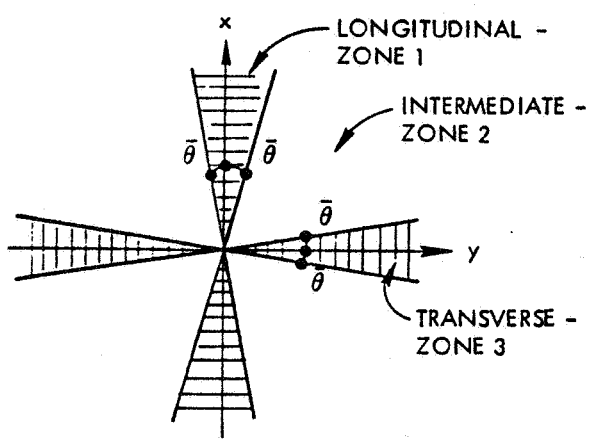

SKRAT(1) Minimum proportion of skin material required to be oriented between $\pm$ THETAA from the longitudinal direction (Zone 1).

SKRAT(2) Minimum proportion of skin material required to have orientations between longitudinal and transverse zones (Zone 2).

SKRAT(3) Minimum proportion of skin material required to be oriented between $\pm$ THETAA from the transverse direction (Zone 3).

A18 - End of Data

Parameter	Description
END	Input the word END starting in column 1.

COMMENTS ON SELECTED INPUT DATA

The input data required for panel sizing and analysis have been defined in summary form in the preceding sections. The input records that require further attention are discussed below.

Record S2 - The computational cost of sizing a panel is a strong function of the number of independent design variables, NDV, used in the sizing procedure. The optimization procedure computes gradients to the constraints (margins of safety) and the objective function (weight) at the start of each optimization iteration to determine how to improve the design. Since these gradients are finite difference gradients, one complete analysis is required for each of the NDV design variables at each iteration. If ten iterations are required to reach an optimum design and NDV = 8, 80 analyses are required just to obtain gradient information. Additional analyses are required in each iteration cycle to locate the optimum for that cycle. Although the analysis procedures are computationally efficient, computational expense can be significant if a large number of analyses are required. Therefore, a variable should be defined as a design variable only if it is critical to the optimization process. One or more variables may be linked at practical proportions to a single design variable (see Record S8). In this way a practical design is obtained and NDV remains small. If experience suggests to the user that a certain variable would likely reach a practical upper or lower bound

during optimization, that variable should be fixed at the bound rather than be defined as a design variable. Here again NDV will be kept small at no penalty to the sizing process.

Further computational economy can be achieved by minimizing the number of optimization iterations required to reach an optimum. This can be done by starting the sizing process from a reasonable design. The starting design should have reasonable proportions and critical margins of safety which do not greatly exceed their defined lower bounds. Single analyses, should be performed to obtain a reasonable design before starting the sizing process. If either a greatly over designed or a highly infeasible cross-section is chosen as a starting design, an optimum will eventually be reached but perhaps only after a large number of iterations.

Record S3 - The input parameter IPRINT controls the amount of output during optimization. It should normally be set equal to 2 during sizing. This will give the user useful information on intermediate designs obtained before the final design is reached. More or less output may be obtained by increasing or decreasing IPRINT. The other parameters in this and subsequent items that have default values should be allowed to assume these values unless noted.

Records S9 - S11 - The parameters in these input records define the constraint set or sets. If all margins of safety have the same bounds, only one constraint set needs to be defined. In this case NCONS = 1, ICON = 1, JCON = 16, KCON = 0. If, for example, the margin of safety in Mode 12 is required to have a lower bound of 0.1 and all other margins of safety are simply required to be positive, three constraint sets would be required (NCONS = 3). Records S10 and S11 would be repeated three times as follows:

S10:	1	11	0
S11:	0.	1.E16	
S10:	12	12	0
S11:	0.1	0.1	
S10:	13	16	0
S11:	0.	1.E16	

Record A1 - The input parameter IWRITE controls the amount of output during an analysis. When IWRITE = 1, a large amount of output is obtained as described in the following section. When IWRITE = 0, only the input data and a margin of safety summary are printed. The user must always set IWRITE = 0 during sizing to avoid an extremely large amount of output. It is suggested that a single analysis be performed with IWRITE = 1 after a successful sizing to produce a complete listing of the computed analysis results.

The parameter NSTMX defines the maximum number of stiffeners participating in one full transverse buckle wavelength in the torsional/flexural analysis. The transverse mode shape is shown below in Figure 8. Experience has shown that two stiffeners per wavelength is normally sufficient to include the critical torsional/flexural mode and this number is suggested for use during sizing. Larger values may be checked during single analyses if desired.

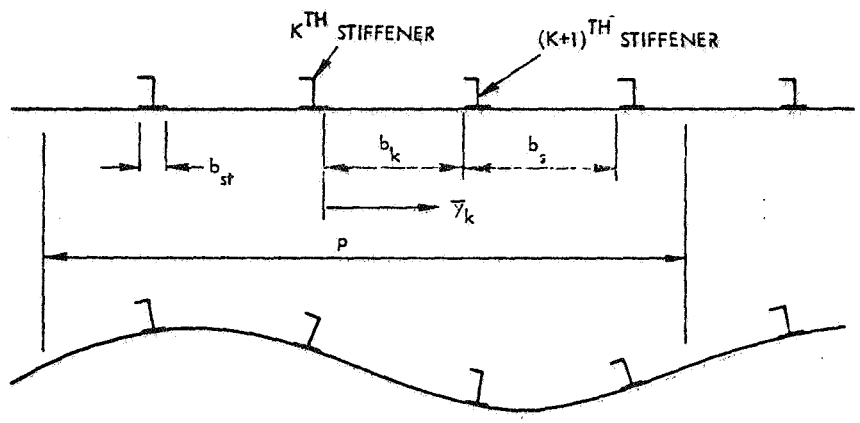

Figure 8. Transverse Mode Shape for Torsional/Flexural Buckling Analysis

The parameter NITER defines the number of iterations used in determining the stiffener local buckling load. A simple step halving procedure is used to find the critical buckling load factor. The accuracy of the load factor is $(.5)^{NITER}$. The default value (NITER = 12) yields an accuracy of 0.02 percent. A smaller value of NITER may be sufficient during sizing.

The parameter NMAX specifies the number of wavelengths considered in the stiffener local buckling analysis. The default values are normally

sufficient. Should these values not be large enough, a message will be returned (when IWRITE = 1 only) suggesting that NMAX be increased over the default or the previously input value.

Record A2 - The geometry of the panel is defined in this item. The stiffener height, H, is the total distance measured from the inner surface of the skin to the far surface of the free flange as shown in Figure 2. The flange widths are measured to the web centerline regardless of whether one or two flanges are present at either flange/web junction.

Records A3 - A8 - The configuration of each of the stiffener elements and the skin are specified in these items in terms of the laminate subsets. In thick laminates, a given stacking sequence is often repeated several times, either directly or in reversed order. Laminate subsets are defined in order to conserve storage and to reduce the amount of input data required. For example, in the 20-ply laminate

$$[\pm 30/0_2/90_2/0_2/\mp 30]_S$$

the 5-ply subset

$$[\pm 30/0_2/90]$$

occurs four times, twice in the specified sequence and twice in reversed sequence.

Up to 20 distinct laminate subsets (NSUBS) may be defined. Each subset may have a maximum of 10 plies or layers, which must all have the same thickness and basic material properties. Subsets are to be defined sequentially 1, 2, ..., L, ...,NSUBS by specifying the number of plies, NPLY, the ply thickness, TPLY, and the orientations, THETA, of each ply in the subset.

To illustrate the concept of laminate subsets, consider the J-stiffened panel shown in Figure 9. The available ply thickness is assumed to be 0.005 in. Three subsets are defined. The first subset consists of 3 plies having orientations of $+45^\circ$, -45°, and 0°. The second subset has two plies at 0° and is treated as one layer with a thickness of 0.01 in. The third subset combines 10 plies into one layer with thickness of 0.05 in. and an orientation of 0°.

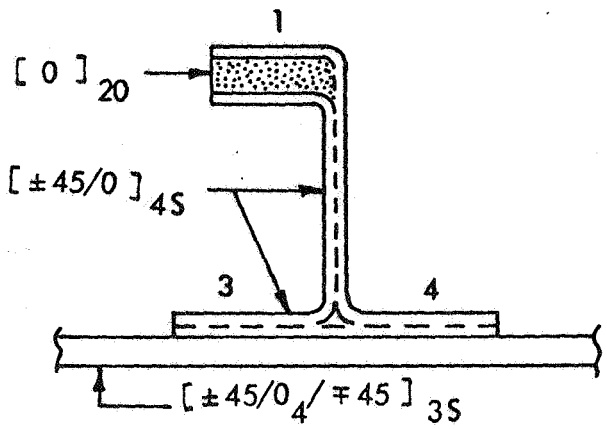

SUBSET	1	2	3
NPLY	3	1	1
TPLY	.005	.010	.050
THETA	+45. -45. 0.	0.	0.

Figure 9. J-Stiffened Panel and Laminate Subsets

The configuration of each nonzero stiffener element and the skin is defined by specifying the quantities NSYM, NLS, and NREP, followed by NLS subset identification numbers. The latter are listed in sequence, beginning at the lower surface of the laminate. To indicate that the ply orientations within a subset are to be read in reversed order, the subset identification number is input with a negative sign. For laminates which are symmetrical with respect to their middle surface (NSYM = 1), only the lower half of the element needs to be specified. When no symmetry exists (NSYM = 0), all subsets in the laminate must be identified. NLS represents the number of subsets to be read, whereas NREP is the number of times these NLS subsets are to be repreated. As an example, in Figure 10 each of the plate elements in the cross-section of Figure 9 has been defined in two different ways, the first one being the preferred way.

If a skin/stiffener interface stress analysis is to be performed, an interface layer must be defined. A separate subset should be used for this purpose. This subset should be the first one specified in the configuration of the stiffener attached flanges. In this case the symmetry and repeat parameters, NSYM and NREP, should both be zero.

ELEMENT	NSYM	NLS	NREP	SUBSET IDENTIFICATIONS (LS)
1	1	5	0	1,1,1,1,3
	0	10	0	1,1,1,1,3,-3,-1,-1,-1,-1
3	1	1	3	1
	0	8	0	1,1,1,1,-1,-1,-1,-1
4	1	1	3	1
	1	4	0	1,1,1,1
Web	1	1	3	1
	1	4	0	1,1,1,1
Skin	1	3	2	1,2,-1
	1	9	0	1,2,-1,1,2,-1,1,2,-1

Figure 10. Stiffener Element and Skin Definition

Records A9 - A11 - These input records define the materials that are used in the panel. Up to 10 linear elastic materials may be specified. Each material is numbered sequentially starting from 1 in the order in which they are specified.

If load cases corresponding to different design conditions, e.g. service (or limit) and ultimate load cases, are defined, different materials with properties and allowables appropriate to the particular load cases should be specified. This situation is illustrated in examples presented in a following section of this report.

The skin/stiffener interface analysis assumes that the interface layer is isotropic. The interface material should therefore be specified with MAT = 1.

Record A12 - Parameters that control the type and details of the analyses that may vary from one load case to another are specified in this record. These parameters, as well as those in records A13 - A16 are repeated sequentially for each of the NLOAD load cases.

MOPT selects the criterion to be used in the stiffener and skin strength analyses. It has no effect on the skin/stiffener interface stress analysis in which the Tsai-Hill criterion is used.

If a buckled skin is acceptable (NOBUCK = 0), a buckled skin analysis is performed, skin stiffness reductions are accounted for in the beam-column analysis, and the antisymmetric skin/stiffener interface stress analysis is performed if ISEP = 1. If the skin is to be buckling resistant (NOBUCK = 1), none of the above analyses are performed regardless of whether the skin buckling margin of safety (Mode 9) is positive or negative.

If ISEP = 1, a skin/stiffener interface stress analysis is performed if NOBUCK = 0 and the skin is buckled or if an internal pressure load is applied. It is suggested that this analysis not be performed during sizing unless reliable interface allowable stresses are available.

The parameters NPX and NPY define the number of equally spaced points in the longitudinal and transverse directions, respectively, at which the interface stress state is evaluated. If the skin is buckled, NPX is the number of points in one half the skin buckling half-wavelength. If the skin is not buckled but internal pressure is present, NPX is the number of points in one half of the panel length. If both buckling and internal pressure are present, NPX is defined relative to the buckling wavelength but stresses are computed by superposing the antisymmetric and symmmetric interface stresses at all points from the panel end up to one half of the panel length. It is suggested that NPX be set equal to 2. NPY is the number of points from the stiffener web center-line to the edge of the flange. NSEP is the number of shape functions used in the interface stress analysis and should be investigated with respect to convergence of the solutions for specific cases.

<u>Record A13</u> - Here the applied loads and eccentricities are specified. The relative magnitudes of the loads must meet the requirements discussed in an earlier section.

If an initial bow eccentricity is specified, both positive and negative values of bow are checked. However, the skin margins of safety are computed only for a positive bow since this inward bow results in increased compression strain in the skin. The axial load eccentricity,

DELNX, should be specified only if the panel axial load is applied at a panel runout at which the centroid does not align with the panel centroid.

Record A14 - The material associated with each subset is defined in this record. MATNO is a list of NSUBS material numbers with values from 1 to NMAT. For example, if five subsets except subset 4 were made of the first material defined and subset 4 was made of the second material defined.

Record A16 - The design strain limitations defined in this record apply to the membrane strains in each ply in the skin only. This is the last record that is repeated for each of the NLOAD load cases.

Record A17 - Lower bounds may be placed on the proportions of skin material oriented in three general directions or zones as shown in the definition of record A17. In this way the skin laminate may be required to have specific relative stiffness characteristics. For example, if a skin that is flexible, or "soft", in the longitudinal direction is desired, high lower bounds on the relative amount of material in the transverse and/or intermediate directions may be specified. In this case the lower bound on material in the longitudinal directions would be set to zero.

If only 0, ± 45, and 90-degree orientations are to be used, the angle THETAA, defining the extent of the longitudinal and transverse zones, may be set to zero degrees. If ± 5, ± 45, ± 85-degree orientations are to be used, THETAA should be set to 5 degrees.

OUTPUT

In the analysis mode, the output is produced by the routines in ANALIZ. With IWRITE = 0, minimum output is returned from these routines. This includes the input data, the panel weight, a summary of the margins of safety for all load cases, and the critical margin of safety, the failure mode, and the associated load case.

When IWRITE = 1, the input data is returned followed by detailed results from each analysis routine for each load case and for both positive and negative values of initial bow eccentricity.

Section properties of the stiffener only, with no attached skin, are printed. Here the vertical distance from the inner surface of the skin to the stiffener centroid is defined as ZST. Skin and unbuckled panel stiffnesses are printed (Modes 1 and 2). Buckled skin parameters and tangent membrane stiffnesses are shown. The buckled panel stiffness and moments are followed by the results of the skin strength analyses (Modes 3 and 4). The skin strength is checked at the four corners of a quadrant of a half-buckle wave of dimensions BS by λ where λ is the longitudinal half-wavelength. The four locations where skin strength computations are made are shown in Figure 11. Both membrane and membrane plus bending strains or stresses are shown for each ply depending on whether the maximum strain or the Tsai-Hill criterion is used. The strain ratios shown (MOPT = 1) are the values of strain divided by the allowable values for each ply. The stress ratio shown (MOPT = 2) is the effective stress ratio according to the Tsai-Hill criterion. The critical margins of safety, ply, fiber orientations, and computed and allowable stresses or strains are shown. If the skin is not buckled, similar results are printed except strength is checked at only one point on the panel. Results for Modes 3 and 4 are computed only when the initial bow eccentricity is inward since this case corresponds to increased compression in the skin.

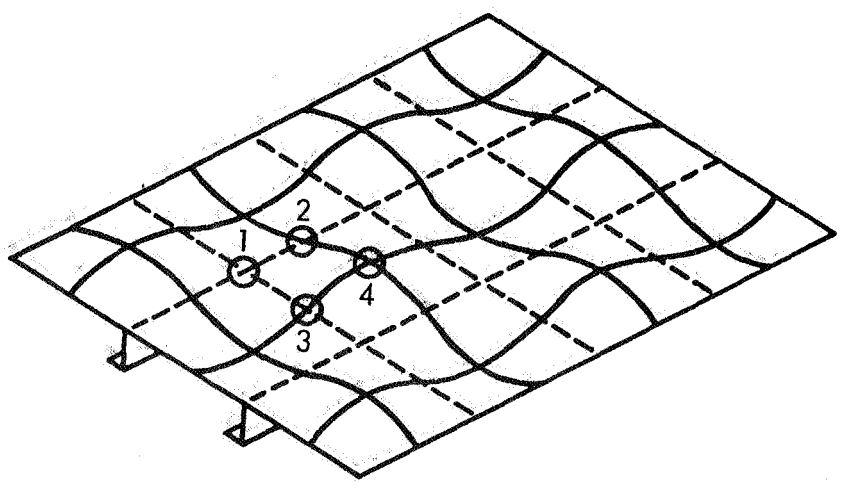

Figure 11. Four Locations where Skin Strength is Evaluated

Similar results are printed for the stiffener strength modes. If the stiffener has free flanges, only Modes 5 and/or 6 are checked. If the stiffener is a blade, only Mode 7 is checked. Summary results follow for the buckling analyses, Modes 8 through 12. All of these analyses are performed for both inward and outward initial bow eccentricities.

The skin/stiffener interface stress analysis (Mode 13) is performed only for inward bow eccentricity since this corresponds to a higher degree of skin postbuckling. Total stresses at points spaced equally in the x direction and in the y direction are shown. If the skin is buckled, NPX points are spaced longitudinally a distance $\lambda/(2*NPX)$ apart starting at the panel end. If internal pressure is present and the skin is postbuckled, the same spacing is maintained but the number of points is increased so that stresses are checked from the panel end to midspan. If internal pressure is present but the skin is not buckled, NPX points are spaced XL/(2*NPX) apart from the panel end to midspan. If the skin is not buckled and zero or external pressure is present, no skin/stiffener interface stress analysis is performed. In all cases, NPY points equally spaced across one attached flange width are defined starting at the stiffener web centerline. The margin of safety and the critical location are printed along with the postbuckling and pressure edge moments and shears in the skin at the edge of the attached flange.

Skin layup design requirements (Modes 14-16) and actual values of the portions of the skin material oriented in the three zones previously defined are printed. The panel weight and margin of safety summary conclude the analysis output.

In the sizing mode, sizing input and default data is printed if IPNPUT = 1. This is followed by the analysis data for the starting design. If IPRINT = 2, as suggested, the objective function value, the design variables, and the constraint values will be printed for the initial design, the intermediate designs and the final design. The constraint values are related to the margins of safety in each mode for the critical load case for each mode. This relation is

$$G = - MS/SCALE$$

where G is the constraint value, MS is the margin of safety and SCALE is a scale factor. The scale factor is the smaller of 0.1 and the absolute

value of the lower bound to the constraint. When a particular mode does not apply to a certain structure, MS is set equal to 99.0 by the program.

After convergence to an optimum is achieved, a summary of the design variables and constraints for the final design is output. The margin of safety summary for all of the load cases completes the output.

EXAMPLES

As an illustration of the use of POSTOP, a typical analysis/sizing cycle is shown by means of four examples. The four examples are (1) Preliminary Analysis, (2) Sizing, (3) Final Sizing, and (4) Final Analysis.

An I-Stiffened, graphite/epoxy panel is to be designed to carry limit loads of 6000 lbs/in longitudinal compression and 600 lbs/in shear. An initial bow eccentricity of 0.001 times the panel length is assumed. The panel must be buckling resistant at the limit loads but may be loaded in the postbuckling range at ultimate loads equal to 1.5 times the limit loads.

For practical reasons, the stiffener spacing is set at 6 inches and the attached flange widths are set at 0.75 inch each. The panel length is fixed at 20 inches. The panel weight should be minimized. Other dimensions, material properties, material allowables and other design requirements are shown in the output.

The stiffener is bonded to the skin. A skin/stiffener interface stress analysis is performed in the final analysis (Example 4).

EXAMPLE 1 - PRELIMINARY ANALYSIS

The first step in sizing a panel is to obtain a reasonable design with which to start the optimization process. The following results represent such a design. The margins of safety are all positive and two are less than 30 percent. Figure 12 shows the cross-section analyzed. A listing of the input data is given on the following pages. The output data, shown subsequently, is typical when the output controls IPNPUT = 2 and IWRITE = 0.

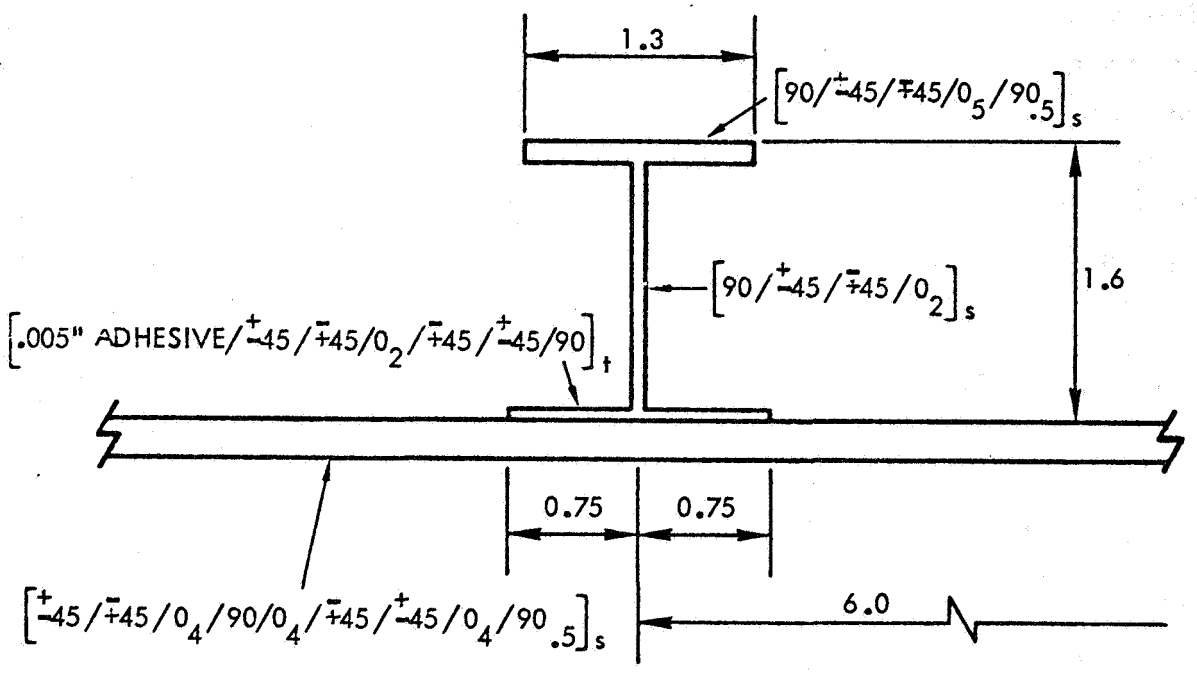

Figure 12. Initial Design for I-Stiffened Panel

```
                    INPUT DATA:   PAGE   1
 LINE
NUMBER  ***************************** DATA ***********************************

  1          *****     EXAMPLE 1 — I-SECTION PRELIMINARY ANALYSIS     *****
   C.....RECORD S2 - PROGRAM CONTROL PARAMETERS: NCALC,NDV,IPNPUT
  2    1  0  2
   C.....RECORD S12 - END OF SIZING DATA
  3    SIZ
   C.....RECORD A1 - ANALYSIS CONTROL DATA: IWRITE,NLOADS,NMAT
  4    0  2  3
   C.....RECORD A2 - GEOMETRY: W(1),W(2),W(3),W(4),H,BS,XL
  5    .65  .65  .75  .75  1.6  6.  20.
   C.....REPEAT RECORDS A3 AND A4 FOR EACH NONZERO PLATE ELEMENT
   C.....RECORD A3 - PLATE ELEMENT SYMMETRY AND REPEAT INDICATORS:  NSYM,NLS,NREP
  6    1  5                  $ W(1)
   C.....RECORD A4 - PLATE ELEMENT SUBSET IDENTIFICATION NUMBERS: LS
  7    3  1  -1  2  4
  8    1  5                  $ W(2)
  9    3  1  -1  2  4
 10    0  7                  $ W(3)
 11    5  1  -1  6  -1  1  3
 12    0  7                  $ W(4)
 13    5  1  -1  6  -1  1  3
 14    1  4                  $ H, WEB
 15    3  1  -1  6
 16    1  10                 $ BS, SKIN
 17    8  -8  9  10  10  9  -7  7  9  10
   C.....RECORD A5 - NUMBER OF LAMINATE SUBSETS TO BE DEFINED: NSUBS
 18    10
   C.....REPEAT RECORDS A6,A7 AND A8 NSUBS TIMES
   C.....RECORD A6 - NUMBER OF PLIES: NPLY
 19    2                     $ SUBSET NO. 1
   C.....RECORD A7 - PLY THICKNESS: TPLY
 20    .005
   C.....RECORD A8 - PLY ORIENTATIONS: THETA
 21    45.  -45.
 22    1                     $ SUBSET NO. 2
 23    .025
 24    0.
 25    1                     $ SUBSET NO. 3
 26    .005
 27    90.
 28    1                     $ SUBSET NO. 4
 29    .0025
 30    90.
 31    1                     $ SUBSET NO. 5
 32    .005
 33    0.
 34    1                     $ SUBSET NO. 6
 35    .010
 36    0.
```

INPUT DATA: PAGE 2

```
LINE
NUMBER  ****************************** DATA ************************************

 37    2                    $ SUBSET NO. 7
 38    .005
 39    45.  -45.
 40    2                    $ SUBSET NO. 8
 41    .005
 42    45.  -45.
 43    1                    $ SUBSET NO. 9
 44    .020
 45    0.
 46    1                    $ SUBSET NO. 10
 47    .0025
 48    90.
   C.....REPEAT RECORDS A9,A10 AND A11 NMAT TIMES
   C.....RECORD A9: MATERIAL CODE NUMBER: MAT
 49    2                    $ MATERIAL NO. 1 (ORTHOTROPIC)
   C.....RECORD A10 - MATERIAL PROPERTIES: E'S,G,NU,ALPHA'S,RHO
 50    .185E8  .164E7  .870E6  .300  .240E-6  .162E-4  .057
   C.....RECORD A11 - MATERIAL ALLOWABLES: STRAINS:  0T,0C,90T,90C,S
   C                                       STRESSES: 0T,0C,90T,90C,S
 51    .653E-2  .670E-2  .500E-2  .100E-1  .133-1,
 52    .133E6  .124E6  .840E4  .164E5  .116E6
 53    2                    $ MATERIAL NO. 2 (ORTHOROPIC)
 54    .185E8  .164E7  .870E6  .300  .240E-6  .162E-4  .057
 55    .980E-2  .1005E-1  .750E-2  .150E-1  .200-1,
 56    .200E6  .186E6  .126E5  .246E5  .174E6
 57    1                    $ MATERIAL NO. 3 (ISOTROPIC)
 58    .245E6  .943E5  .300  .144E-4  .050
 59    .0257  .122  .0954  6300.  30000.  9000.
   C.....REPEAT RECORDS A12,A13,A14,A15 AND A16 NLOADS TIMES
   C.....RECORD A12 - ADDITIONAL ANALYSIS CONTROL DATA: MOPT,ICLAMP,NOBUCK
 60    1  0  0              $ LOAD CASE NO. 1 (ULTIMATE LOAD)
   C.....RECORD A13 - LOADS AND ECCENTRICITIES: XN1,XN2,XN3,PRESS,DELT,DEL,DELNX
 61    -9000.  0.  900.  0.  0.  .001  0.
   C.....RECORD A14 - MATERIAL SPECIFICATION: MATNO
 62    2  2  2  2  3  2  2  2  2  2
   C.....RECORD A15 - STIFFNESS REQUIREMENTS: GTREQ,ETREQ
 63    .3E6  1.5E6
   C.....RECORD A16 - DESIGN STRAIN LIMITATIONS: 0T,0C,90T,90C
 64    .0045  .0040  .0045  .0040
 65    1  0  1              $ LOAD CASE NO. 2 (LIMIT LOAD)
 66    -6000.  0.  600.  0.  0.  .001  0.
 67    1  1  1  1  3  1  1  1  1  1
 68    .3E6  1.5E6
 69    .0030  .0027  .0030  .0027
   C.....SKIN LAYUP DESIGN CONSTRAINTS: THETAA,SKRAT(1),SKRAT(2),SKRAT(3)
 70    0.0  0.2  0.3  0.05
   C.....RECORD A18 - END OF DATA
 71    END
```

Output for Example 1.

```
* * * * * * * * * * * * * * * * * * * * * * * * * * * * * * * * * * * * *

     *****     EXAMPLE 1 -- I-SECTION PRELIMINARY ANALYSIS     *****

* * * * * * * * * * * * * * * * * * * * * * * * * * * * * * * * * * * * *

                    * * * * * * * * * * * *

                    * * * P O S T O P * * *

                    * * * * * * * * * * * *

        * * * * POSTBUCKLED OPEN-STIFFENED OPTIMUM PANELS * * * *

        ANALYSIS AND SIZING OF COMPOSITE PANELS WITH OPEN-SECTION
        STIFFENERS SUBJECTED TO GENERAL INPLANE LOADS AND UNIFORM
        PRESSURE. PANELS MAY BE LOADED IN THE POSTBUCKLING RANGE.

        * * * * LOCKHEED GEORGIA COMPANY * * * JUNE  1983 * * * *


IWRITE = 0     NLOADS = 2     NMAT = 3     NSTMX = 2     NITER =12     NMAX = 0


FLANGE WIDTHS:      W1 =  .650     W2 =  .650     W3 =  .750     W4 =  .750

STIFFENER HEIGHT = 1.600   STIFFENER SPACING = 6.000   PANEL LENGTH = 20.00


ELEMENT LAMINATE CONFIGURATIONS:

FLANGE 1    NSYM= 1   NLSS= 5   NREP= 0   SUBSETS:  3  1 -1  2  4
FLANGE 2    NSYM= 1   NLSS= 5   NREP= 0   SUBSETS:  3  1 -1  2  4
FLANGE 3    NSYM= 0   NLSS= 7   NREP= 0   SUBSETS:  5  1 -1  6 -1  1  3
FLANGE 4    NSYM= 0   NLSS= 7   NREP= 0   SUBSETS:  5  1 -1  6 -1  1  3
WEB         NSYM= 1   NLSS= 4   NREP= 0   SUBSETS:  3  1 -1  6
SKIN        NSYM= 1   NLSS=10   NREP= 0   SUBSETS:  8 -8  9 10 10  9 -7  7
                                                    9 10


THE FOLLOWING LAMINATE SUBSETS ARE DEFINED:

 1    2 PLIES   PLY THICKNESS=  .00500    ORIENTATIONS:  45 -45
 2    1 PLY     PLY THICKNESS=  .02500    ORIENTATION :   0
 3    1 PLY     PLY THICKNESS=  .00500    ORIENTATION :  90
 4    1 PLY     PLY THICKNESS=  .00250    ORIENTATION :  90
 5    1 PLY     PLY THICKNESS=  .00500    ORIENTATION :   0
 6    1 PLY     PLY THICKNESS=  .01000    ORIENTATION :   0
 7    2 PLIES   PLY THICKNESS=  .00500    ORIENTATIONS:  45 -45
 8    2 PLIES   PLY THICKNESS=  .00500    ORIENTATIONS:  45 -45
 9    1 PLY     PLY THICKNESS=  .02000    ORIENTATION :   0
10    1 PLY     PLY THICKNESS=  .00250    ORIENTATION :  90
```

THE FOLLOWING MATERIALS ARE SPECIFIED:

MATERIAL NO. 1 CODE = 2 RHO = .570-01

E11= .185+08	G12= .870+06	NU12= .300+00	ALPHA1= .240-06
E22= .164+07	G13= .870+06	NU13= .300+00	ALPHA2= .162-04
E33= .164+07	G23= .870+06	NU23= .300+00	ALPHA3= .162-04

ALLOWABLE STRAIN AND STRESS VALUES:

	0-DEGREE TENSION	0-DEGREE COMPRESS.	90-DEGREE TENSION	90-DEGREE COMPRESS.	SHEAR
STRAIN	.653-02	.670-02	.500-02	.100-01	.133-01
STRESS	.133+06	.124+06	.840+04	.164+05	.116+06

MATERIAL NO. 2 CODE = 2 RHO = .570-01

E11= .185+08	G12= .870+06	NU12= .300+00	ALPHA1= .240-06
E22= .164+07	G13= .870+06	NU13= .300+00	ALPHA2= .162-04
E33= .164+07	G23= .870+06	NU23= .300+00	ALPHA3= .162-04

ALLOWABLE STRAIN AND STRESS VALUES:

	0-DEGREE TENSION	0-DEGREE COMPRESS.	90-DEGREE TENSION	90-DEGREE COMPRESS.	SHEAR
STRAIN	.980-02	.101-01	.750-02	.150-01	.200-01
STRESS	.200+06	.186+06	.126+05	.246+05	.174+06

MATERIAL NO. 3 CODE = 1 RHO = .500-01

E11= .245+06	G12= .943+05	NU12= .300+00	ALPHA1= .144-04
E22= .245+06	G13= .943+05	NU13= .300+00	ALPHA2= .144-04
E33= .245+06	G23= .943+05	NU23= .300+00	ALPHA3= .144-04

ALLOWABLE STRAIN AND STRESS VALUES:

	0-DEGREE TENSION	0-DEGREE COMPRESS.	90-DEGREE TENSION	90-DEGREE COMPRESS.	SHEAR
STRAIN	.257-01	.122+00	.257-01	.122+00	.954-01
STRESS	.630+04	.300+05	.630+04	.300+05	.900+04

```
* * * * * * * * * * * * * * * *
* * * LOAD CASE NUMBER  1 * * *
* * * * * * * * * * * * * * * *


MOPT = 1     ICLAMP = 0     NOBUCK = 0
ISEP = 0     NPX  = 0       NPY    = 0     NSEP   = 0


APPLIED LOADS (FORCE/UNIT WIDTH):  NX = -9000.   NY =     0.   NXY =   900.

PRESSURE =     .00                 TEMPERATURE DIFF. =    0.

INITIAL ECCEN./LENGTH = .0010      AXIAL LOAD ECCEN. = .0000


SUBSET MATERIAL SPECIFICATION:

SUBSET  1     MATERIAL NO.  2
SUBSET  2     MATERIAL NO.  2
SUBSET  3     MATERIAL NO.  2
SUBSET  4     MATERIAL NO.  2
SUBSET  5     MATERIAL NO.  3
SUBSET  6     MATERIAL NO.  2
SUBSET  7     MATERIAL NO.  2
SUBSET  8     MATERIAL NO.  2
SUBSET  9     MATERIAL NO.  2
SUBSET 10     MATERIAL NO.  2


REQUIRED SHEAR STIFFNESS, GTREQ =  .3000+06
REQUIRED AXIAL STIFFNESS, ETREQ =  .1500+07

STRAIN LIMITATIONS IN SKIN  (MEMBRANE ONLY)

0-DEG. TENSION    0-DEG. COMPRESS.    90-DEG. TENSION    90-DEG. COMPRESS.
     .0045             .0040               .0045              .0040
```

```
* * * * * * * * * * * * * * * *
* * * LOAD CASE NUMBER  2 * * *
* * * * * * * * * * * * * * * *


MOPT = 1     ICLAMP = 0     NOBUCK = 1
ISEP = 0     NPX  = 0       NPY    = 0     NSEP   = 0


APPLIED LOADS (FORCE/UNIT WIDTH):  NX = -6000.   NY =     0.   NXY =   600.

PRESSURE =    .00                  TEMPERATURE DIFF. =    0.

INITIAL ECCEN./LENGTH = .0010      AXIAL LOAD ECCEN. = .0000


SUBSET MATERIAL SPECIFICATION:

SUBSET  1     MATERIAL NO.  1
SUBSET  2     MATERIAL NO.  1
SUBSET  3     MATERIAL NO.  1
SUBSET  4     MATERIAL NO.  1
SUBSET  5     MATERIAL NO.  3
SUBSET  6     MATERIAL NO.  1
SUBSET  7     MATERIAL NO.  1
SUBSET  8     MATERIAL NO.  1
SUBSET  9     MATERIAL NO.  1
SUBSET 10     MATERIAL NO.  1


REQUIRED SHEAR STIFFNESS, GTREQ =  .3000+06
REQUIRED AXIAL STIFFNESS, ETREQ =  .1500+07

STRAIN LIMITATIONS IN SKIN  (MEMBRANE ONLY)

0-DEG. TENSION    0-DEG. COMPRESS.    90-DEG. TENSION    90-DEG. COMPRESS.
     .0030             .0027               .0030              .0027




SKIN LAYUP DESIGN CONSTRAINTS -- THETAA =   .0

  SKRAT(1)     SKRAT(2)     SKRAT(3)
    .200         .300         .050
```

WEIGHT/(UNIT PLAN AREA) = .01535

* * * MARGIN OF SAFETY SUMMARY * * *

MODE	DESCRIPTION	LOADING CASE NO. 1	2	3	4	5
1	SHEAR STIFFNESS	.679	.679			
2	LONGIT. STIFFNESS	1.026	1.026			
3	SKIN STRENGTH	1.097	2.260			
4	STRAIN LIMITATION	.192	.331			
5	L. FLANGE STRENGTH	1.420	1.749			
6	R. FLANGE STRENGTH	1.420	1.749			
7	WEB STRENGTH	99.000	99.000			
8	STIF. LOCAL BUCKLING	1.382	3.005			
9	SKIN LOCAL BUCKLING	99.000	.434			
10	ROLLING BUCKLING	2.336	4.645			
11	TORS./FLEX. BUCKLING	2.290	4.973			
12	EULER BUCKLING	.332	1.200			
13	SKIN/STIF. INTERFACE	99.000	99.000			
14	SKIN LAYUP (LONGIT.)	1.791	1.791			
15	SKIN LAYUP (INTERM.)	.240	.240			
16	SKIN LAYUP (TRANSV.)	.395	.395			

MINIMUM MARGIN OF SAFETY = .192

CRITICAL MODE = 4
LOADING CASE = 1

PLY NO. 14 IS CRITICAL ORIENTATION = 90.

STRAINS ARE: EPS1 = .001765 EPS2 = -.003355 EPS12 = -.001787

ALLOW. STRAINS ARE: EPS1 = .004500 EPS2 = .004500 EPS12 = .020000
EPS1 = -.004000 EPS2 = -.004000

PROGRAM CALLS TO ANALIZ

ICALC	CALLS
1	1
2	1
3	1

EXAMPLE 2 - SIZING

Using the design of the previous example as the starting design, a minimum-weight panel is determined using stiffener dimensions and lamina thicknesses as design variables. Eight independent design variables are defined. Two linked variables are defined. The right free flange width is required to be equal to the left free flange width. The thickness of the 90-degree material in the free flange is required to be 0.1 times the thickness of the 0-degree material to provide for a minimum transverse stiffness in the flange and to control matrix cracking in the 0-degree material. Upper bounds are imposed on the stiffener dimensions although these bounds prove not to be active constraints after sizing is completed. All margins of safety are required to be positive and the margin of safety of Mode 12 is required to be greater than 0.1. Membrane strain limitations and skin layup design constraints are imposed on the skin.

The output shown consists of the sizing and analysis data, an initial margin of safety summary, intermediate sizing results, and the final design with its margin of safety summary. Four margins of safety are close to their lower bounds. These are Modes 4 and 8 from the ultimate load case, Mode 9 from the limit load case, and Mode 15. Two hundred seventeen calls to the major analysis routine (ANALIZ) were made. The input data is listed on the following pages. The output follows the input data listing.

```
                    INPUT DATA:   PAGE   1
 LINE
NUMBER  ****************************** DATA ************************************

  1                 *****     EXAMPLE 2 -- I-SECTION SIZING     *****
   C.....RECORD S2 - PROGRAM CONTROL PARAMETERS: NCALC,NDV,IPNPUT
  2    2  8  1
   C.....RECORD S3 - OPTIMIZATION CONTROL INTEGER PARAMETERS:
   C                 IPRINT,ITMAX,ICNDIR,NSCAL,ITRM,LINOBJ,NACMX1
  3    2  20  0  9  0  0  10
   C.....RECORD S4 - OPTIM. CONTROL FLOATING POINT PARAMETERS: FDCH,FDCHM
  4    0.  .00001
   C.....RECORD S5 - OPTIM. CONTROL FLOATING POINT PARAMETERS: DELFUN,DABFUN
  5    0.  .00001
   C.....RECORD S6 - BASIC OPTIMIZATION INFORMATION: NDVTOT,IOBJ,SGNOPT
  6    10  51  -1.
   C.....REPEAT RECORD S7 NDV TIMES
   C.....RECORD S7 - DESIGN VARIABLE BOUNDS: VLB,VUB
  7    0.  1.0                 $ W(1)
  8    0.  2.0                 $ H
  9    0.  1.E16               $ TPLY(1)
 10    0.  1.E16               $ TPLY(2)
 11    0.  1.E16               $ TPLY(6)
 12    0.  1.E16               $ TPLY(7)
 13    0.  1.E16               $ TPLY(8)
 14    0.  1.E16               $ TPLY(9)
   C.....REPEAT RECORD S8 NDVTOT TIMES
   C.....RECORD S8 - DESIGN VARIABLE IDENTIFICATION: NDSGN,IDSGN,AMULT
 15    1  21                   $ W(1)
 16    2  25                   $ H
 17    3  31                   $ TPLY(1)
 18    4  32                   $ TPLY(2)
 19    5  36                   $ TPLY(6)
 20    6  37                   $ TPLY(7)
 21    7  38                   $ TPLY(8)
 22    8  39                   $ TPLY(9)
 23    1  22                   $ W(2)=W(1)
 24    4  34  .1               $TPLY(4)=.1*TPLY(2)
   C.....RECORD S9 - NUMBER OF CONSTRAINT SETS: NCONS
 25    3
   C.....REPEAT RECORDS S10 AND S11 NCONS TIMES
   C.....RECORD S10 - CONTRIANTS SET IDENTIFICATION: ICON,JCON,KCON
 26    1  11                   $ CONSTRAINTS 1 - 11
   C.....RECORD S11 - CONSTRAINT SET BOUNDS: BL,BU
 27    0.  1.E16
 28    12  12                  $ CONSTRAINT 12
 29    0.1  1.E16
 30    13  16                  $ CONSTRAINTS 13 - 16
 31    0.  1.E16
   C.....RECORD S12 - END OF SIZING DATA
 32    SIZ
   C.....RECORD A1 - ANALYSIS CONTROL DATA: IWRITE,NLOADS,NMAT
```

INPUT DATA: PAGE 2

```
 LINE
NUMBER  ****************************** DATA ************************************

  33    0  2  3
    C.....RECORD A2 - GEOMETRY: W(1),W(2),W(3),W(4),H,BS,XL
  34    .65  .65  .75  .75  1.6  6.  20.
    C.....REPEAT RECORDS A3 AND A4 FOR EACH NONZERO PLATE ELEMENT
    C.....RECORD A3 - PLATE ELEMENT SYMMETRY AND REPEAT INDICATORS:  NSYM,NLS,NREP
  35    1  5                  $ W(1)
    C.....RECORD A4 - PLATE ELEMENT SUBSET IDENTIFICATION NUMBERS: LS
  36    3  1  -1  2  4
  37    1  5                  $ W(2)
  38    3  1  -1  2  4
  39    0  7                  $ W(3)
  40    5  1  -1  6  -1  1  3
  41    0  7                  $ W(4)
  42    5  1  -1  6  -1  1  3
  43    1  4                  $ H, WEB
  44    3  1  -1  6
  45    1  10                 $ BS, SKIN
  46    8  -8  9  10  10  9  -7  7  9  10
    C.....RECORD A5 - NUMBER OF LAMINATE SUBSETS TO BE DEFINED: NSUBS
  47    10
    C.....REPEAT RECORDS A6,A7 AND A8 NSUBS TIMES
    C.....RECORD A6 - NUMBER OF PLIES: NPLY
  48    2                     $ SUBSET NO. 1
    C.....RECORD A7 - PLY THICKNESS: TPLY
  49    .005
    C.....RECORD A8 - PLY ORIENTATIONS: THETA
  50    45.  -45.
  51    1                     $ SUBSET NO. 2
  52    .025
  53    0.
  54    1                     $ SUBSET NO. 3
  55    .005
  56    90.
  57    1                     $ SUBSET NO. 4
  58    .0025
  59    90.
  60    1                     $ SUBSET NO. 5
  61    .005
  62    0.
  63    1                     $ SUBSET NO. 6
  64    .010
  65    0.
  66    2                     $ SUBSET NO. 7
  67    .005
  68    45.  -45.
  69    2                     $ SUBSET NO. 8
  70    .005
  71    45.  -45.
```

```
 LINE
NUMBER  ****************************** DATA ************************************

  72    1                    $ SUBSET NO. 9
  73    .020
  74    0.
  75    1                    $ SUBSET NO. 10
  76    .0025
  77    90.
    C.....REPEAT RECORDS A9,A10 AND A11 NMAT TIMES
    C.....RECORD A9: MATERIAL CODE NUMBER: MAT
  78    2                    $ MATERIAL NO. 1 (ORTHOTROPIC)
    C.....RECORD A10 - MATERIAL PROPERTIES: E'S,G,NU,ALPHA'S,RHO
  79    .185E8  .164E7  .870E6  .300  .240E-6  .162E-4  .057
    C.....RECORD A11 - MATERIAL ALLOWABLES: STRAINS:  0T,0C,90T,90C,S
    C                                       STRESSES: 0T,0C,90T,90C,S
  80    .653E-2  .670E-2  .500E-2  .100E-1  .133-1,
  81    .133E6  .124E6  .840E4  .164E5  .116E6
  82    2                    $ MATERIAL NO. 2 (ORTHOROPIC)
  83    .185E8  .164E7  .870E6  .300  .240E-6  .162E-4  .057
  84    .980E-2  .1005E-1  .750E-2  .150E-1  .200-1,
  85    .200E6  .186E6  .126E5  .246E5  .174E6
  86    1                    $ MATERIAL NO. 3 (ISOTROPIC)
  87    .245E6  .943E5  .300  .144E-4  .050
  88    .0257  .122  .0954  6300.  30000.  9000.
    C.....REPEAT RECORDS A12,A13,A14,A15 AND A16 NLOADS TIMES
    C.....RECORD A12 - ADDITIONAL ANALYSIS CONTROL DATA: MOPT,ICLAMP,NOBUCK
  89    1  0  0              $ LOAD CASE NO. 1 (ULTIMATE LOAD)
    C.....RECORD A13 - LOADS AND ECCENTRICITIES: XN1,XN2,XN3,PRESS,DELT,DEL,DELNX
  90    -9000.  0.  900.  0.  0.  .001  0.
    C.....RECORD A14 - MATERIAL SPECIFICATION: MATNO
  91    2  2  2  2  3  2  2  2  2  2
    C.....RECORD A15 - STIFFNESS REQUIREMENTS: GTREQ,ETREQ
  92    .3E6  1.5E6
    C.....RECORD A16 - DESIGN STRAIN LIMITATIONS: 0T,0C,90T,90C
  93    .0045  .0040  .0045  .0040
  94    1  0  1              $ LOAD CASE NO. 2 (LIMIT LOAD)
  95    -6000.  0.  600.  0.  0.  .001  0.
  96    1  1  1  1  3  1  1  1  1  1
  97    .3E6  1.5E6
  98    .0030  .0027  .0030  .0027
    C.....SKIN LAYUP DESIGN CONSTRAINTS: THETAA,SKRAT(1),SKRAT(2),SKRAT(3)
  99    0.0  0.2  0.3  0.05
    C.....RECORD A18 - END OF DATA
 100    END
```

Output for Example 2.

```
TITLE:
          *****     EXAMPLE 2 — I-SECTION SIZING     *****


CONTROL PARAMETERS:
CALCULATION CONTROL,                    NCALC =    2
NUMBER OF GLOBAL DESIGN VARIABLES,       NDV =    8
INPUT INFORMATION PRINT CODE,          IPNPUT =    1


CALCULATION CONTROL, NCALC
VALUE   MEANING
  1     SINGLE ANALYSIS
  2     OPTIMIZATION



* * OPTIMIZATION INFORMATION

GLOBAL VARIABLE NUMBER OF OBJECTIVE          =   51
MULTIPLIER (NEGATIVE INDICATES MINIMIZATION) =   -.1000+01

CONMIN PARAMETERS (IF ZERO, CONMIN DEFAULT WILL OVER-RIDE)

IPRINT  ITMAX   ICNDIR   NSCAL   ITRM   LINOBJ  NACMX1   NFDG
  2      20       0       9       0       0      10       0

 FDCH            FDCHM           CT              CTMIN
   .00000          .10000-04       .00000          .00000

 CTL             CTLMIN          THETA           PHI
   .00000          .00000          .00000          .00000

 DELFUN          DABFUN          ALPHAX          ABOBJ1
   .00000          .10000-04       .00000          .00000

DESIGN VARIABLE INFORMATION
NON-ZERO INITIAL VALUE WILL OVER-RIDE MODULE INPUT
D. V.     LOWER          UPPER          INITIAL
NO.       BOUND          BOUND          VALUE          SCALE
  1       .00000         .10000+01      .00000         .00000
  2       .00000         .20000+01      .00000         .00000
  3       .00000         .11000+16      .00000         .00000
  4       .00000         .11000+16      .00000         .00000
  5       .00000         .11000+16      .00000         .00000
  6       .00000         .11000+16      .00000         .00000
  7       .00000         .11000+16      .00000         .00000
  8       .00000         .11000+16      .00000         .00000
```

DESIGN VARIABLES

ID	D. V. NO.	GLOBAL VAR. NO.	MULTIPLYING FACTOR
1	1	21	.10000+01
2	2	25	.10000+01
3	3	31	.10000+01
4	4	32	.10000+01
5	5	36	.10000+01
6	6	37	.10000+01
7	7	38	.10000+01
8	8	39	.10000+01
9	1	22	.10000+01
10	4	34	.10000+00

CONSTRAINT INFORMATION

THERE ARE 3 CONSTRAINT SETS

ID	GLOBAL VAR. 1	GLOBAL VAR. 2	LINEAR ID	LOWER BOUND	NORMALIZATION FACTOR	UPPER BOUND	NORMALIZATION FACTOR
1	1	11	0	.00000	.10000+00	.11000+16	.11000+16
12	12	12	0	.10000+00	.10000+00	.11000+16	.11000+16
13	13	16	0	.00000	.10000+00	.11000+16	.11000+16

TOTAL NUMBER OF CONSTRAINED PARAMETERS = 16

* * ESTIMATED DATA STORAGE REQUIREMENTS

REAL			INTEGER		
INPUT	EXECUTION	AVAILABLE	INPUT	EXECUTION	AVAILABLE
123	509	5000	85	147	1000

```
* * * * * * * * * * * * * * * * * * * * * * * * * * * * * * * * * * * * * * *

          *****     EXAMPLE 2 — I-SECTION SIZING     *****

* * * * * * * * * * * * * * * * * * * * * * * * * * * * * * * * * * * * * * *

                    * * * * * * * * * * * *

                    * * * P O S T O P * * *

                    * * * * * * * * * * * *

        * * * * POSTBUCKLED OPEN-STIFFENED OPTIMUM PANELS * * * *

        ANALYSIS AND SIZING OF COMPOSITE PANELS WITH OPEN-SECTION
        STIFFENERS SUBJECTED TO GENERAL INPLANE LOADS AND UNIFORM
        PRESSURE. PANELS MAY BE LOADED IN THE POSTBUCKLING RANGE.

        * * * * LOCKHEED GEORGIA COMPANY * * * JUNE  1983 * * * *


IWRITE = 0     NLOADS = 2     NMAT = 3     NSTMX = 2     NITER =12     NMAX = 0


FLANGE WIDTHS:     W1 =  .650     W2 =  .650     W3 =  .750     W4 =  .750

STIFFENER HEIGHT = 1.600   STIFFENER SPACING = 6.000   PANEL LENGTH = 20.00


ELEMENT LAMINATE CONFIGURATIONS:

FLANGE 1    NSYM= 1   NLSS= 5   NREP= 0   SUBSETS:  3  1 -1  2  4
FLANGE 2    NSYM= 1   NLSS= 5   NREP= 0   SUBSETS:  3  1 -1  2  4
FLANGE 3    NSYM= 0   NLSS= 7   NREP= 0   SUBSETS:  5  1 -1  6 -1  1  3
FLANGE 4    NSYM= 0   NLSS= 7   NREP= 0   SUBSETS:  5  1 -1  6 -1  1  3
WEB         NSYM= 1   NLSS= 4   NREP= 0   SUBSETS:  3  1 -1  6
SKIN        NSYM= 1   NLSS=10   NREP= 0   SUBSETS:  8 -8  9 10 10  9 -7  7
                                                    9 10


THE FOLLOWING LAMINATE SUBSETS ARE DEFINED:

 1    2 PLIES   PLY THICKNESS=  .00500    ORIENTATIONS:  45 -45
 2    1 PLY     PLY THICKNESS=  .02500    ORIENTATION :   0
 3    1 PLY     PLY THICKNESS=  .00500    ORIENTATION :  90
 4    1 PLY     PLY THICKNESS=  .00250    ORIENTATION :  90
 5    1 PLY     PLY THICKNESS=  .00500    ORIENTATION :   0
 6    1 PLY     PLY THICKNESS=  .01000    ORIENTATION :   0
 7    2 PLIES   PLY THICKNESS=  .00500    ORIENTATIONS:  45 -45
 8    2 PLIES   PLY THICKNESS=  .00500    ORIENTATIONS:  45 -45
 9    1 PLY     PLY THICKNESS=  .02000    ORIENTATION :   0
10    1 PLY     PLY THICKNESS=  .00250    ORIENTATION :  90
```

THE FOLLOWING MATERIALS ARE SPECIFIED:

MATERIAL NO. 1 CODE = 2 RHO = .570-01

E11= .185+08	G12= .870+06	NU12= .300+00	ALPHA1= .240-06
E22= .164+07	G13= .870+06	NU13= .300+00	ALPHA2= .162-04
E33= .164+07	G23= .870+06	NU23= .300+00	ALPHA3= .162-04

ALLOWABLE STRAIN AND STRESS VALUES:

	0-DEGREE TENSION	0-DEGREE COMPRESS.	90-DEGREE TENSION	90-DEGREE COMPRESS.	SHEAR
STRAIN	.653-02	.670-02	.500-02	.100-01	.133-01
STRESS	.133+06	.124+06	.840+04	.164+05	.116+06

MATERIAL NO. 2 CODE = 2 RHO = .570-01

E11= .185+08	G12= .870+06	NU12= .300+00	ALPHA1= .240-06
E22= .164+07	G13= .870+06	NU13= .300+00	ALPHA2= .162-04
E33= .164+07	G23= .870+06	NU23= .300+00	ALPHA3= .162-04

ALLOWABLE STRAIN AND STRESS VALUES:

	0-DEGREE TENSION	0-DEGREE COMPRESS.	90-DEGREE TENSION	90-DEGREE COMPRESS.	SHEAR
STRAIN	.980-02	.101-01	.750-02	.150-01	.200-01
STRESS	.200+06	.186+06	.126+05	.246+05	.174+06

MATERIAL NO. 3 CODE = 1 RHO = .500-01

E11= .245+06	G12= .943+05	NU12= .300+00	ALPHA1= .144-04
E22= .245+06	G13= .943+05	NU13= .300+00	ALPHA2= .144-04
E33= .245+06	G23= .943+05	NU23= .300+00	ALPHA3= .144-04

ALLOWABLE STRAIN AND STRESS VALUES:

	0-DEGREE TENSION	0-DEGREE COMPRESS.	90-DEGREE TENSION	90-DEGREE COMPRESS.	SHEAR
STRAIN	.257-01	.122+00	.257-01	.122+00	.954-01
STRESS	.630+04	.300+05	.630+04	.300+05	.900+04

```
* * * * * * * * * * * * * * * *
* * * LOAD CASE NUMBER  1 * * *
* * * * * * * * * * * * * * * *


MOPT = 1     ICLAMP = 0     NOBUCK = 0
ISEP = 0     NPX  = 0       NPY    = 0     NSEP   = 0


APPLIED LOADS (FORCE/UNIT WIDTH):  NX = -9000.   NY =     0.   NXY =   900.

PRESSURE =    .00                  TEMPERATURE DIFF. =    0.

INITIAL ECCEN./LENGTH = .0010      AXIAL LOAD ECCEN. = .0000



SUBSET MATERIAL SPECIFICATION:

SUBSET  1     MATERIAL NO.  2
SUBSET  2     MATERIAL NO.  2
SUBSET  3     MATERIAL NO.  2
SUBSET  4     MATERIAL NO.  2
SUBSET  5     MATERIAL NO.  3
SUBSET  6     MATERIAL NO.  2
SUBSET  7     MATERIAL NO.  2
SUBSET  8     MATERIAL NO.  2
SUBSET  9     MATERIAL NO.  2
SUBSET 10     MATERIAL NO.  2


REQUIRED SHEAR STIFFNESS, GTREQ =  .3000+06
REQUIRED AXIAL STIFFNESS, ETREQ =  .1500+07

STRAIN LIMITATIONS IN SKIN  (MEMBRANE ONLY)

0-DEG. TENSION    0-DEG. COMPRESS.    90-DEG. TENSION    90-DEG. COMPRESS.
    .0045             .0040               .0045              .0040
```

```
* * * * * * * * * * * * * * * * *
* * * LOAD CASE NUMBER  2 * * *
* * * * * * * * * * * * * * * * *


MOPT = 1     ICLAMP = 0     NOBUCK = 1
ISEP = 0     NPX  = 0       NPY    = 0     NSEP   = 0


APPLIED LOADS (FORCE/UNIT WIDTH):  NX = -6000.   NY =     0.   NXY =   600.

PRESSURE =    .00                  TEMPERATURE DIFF. =    0.

INITIAL ECCEN./LENGTH = .0010      AXIAL LOAD ECCEN. = .0000



SUBSET MATERIAL SPECIFICATION:

SUBSET  1     MATERIAL NO.  1
SUBSET  2     MATERIAL NO.  1
SUBSET  3     MATERIAL NO.  1
SUBSET  4     MATERIAL NO.  1
SUBSET  5     MATERIAL NO.  3
SUBSET  6     MATERIAL NO.  1
SUBSET  7     MATERIAL NO.  1
SUBSET  8     MATERIAL NO.  1
SUBSET  9     MATERIAL NO.  1
SUBSET 10     MATERIAL NO.  1


REQUIRED SHEAR STIFFNESS, GTREQ =  .3000+06
REQUIRED AXIAL STIFFNESS, ETREQ =  .1500+07

STRAIN LIMITATIONS IN SKIN  (MEMBRANE ONLY)

0-DEG. TENSION    0-DEG. COMPRESS.    90-DEG. TENSION    90-DEG. COMPRESS.
     .0030             .0027               .0030              .0027



SKIN LAYUP DESIGN CONSTRAINTS — THETAA =   .0

  SKRAT(1)     SKRAT(2)     SKRAT(3)
    .200         .300         .050
```

WEIGHT/(UNIT PLAN AREA) = .01535

* * * MARGIN OF SAFETY SUMMARY * * *

MODE	DESCRIPTION	LOADING CASE NO. 1	2	3	4	5
1	SHEAR STIFFNESS	.679	.679			
2	LONGIT. STIFFNESS	1.026	1.026			
3	SKIN STRENGTH	1.097	2.260			
4	STRAIN LIMITATION	.192	.331			
5	L. FLANGE STRENGTH	1.420	1.749			
6	R. FLANGE STRENGTH	1.420	1.749			
7	WEB STRENGTH	99.000	99.000			
8	STIF. LOCAL BUCKLING	1.382	3.005			
9	SKIN LOCAL BUCKLING	99.000	.434			
10	ROLLING BUCKLING	2.336	4.645			
11	TORS./FLEX. BUCKLING	2.290	4.973			
12	EULER BUCKLING	.332	1.200			
13	SKIN/STIF. INTERFACE	99.000	99.000			
14	SKIN LAYUP (LONGIT.)	1.791	1.791			
15	SKIN LAYUP (INTERM.)	.240	.240			
16	SKIN LAYUP (TRANSV.)	.395	.395			

MINIMUM MARGIN OF SAFETY = .192

CRITICAL MODE = 4
LOADING CASE = 1

PLY NO. 14 IS CRITICAL ORIENTATION = 90.

STRAINS ARE: EPS1 = .001765 EPS2 = -.003355 EPS12 = -.001787

ALLOW. STRAINS ARE: EPS1 = .004500 EPS2 = .004500 EPS12 = .020000
EPS1 = -.004000 EPS2 = -.004000

INITIAL FUNCTION INFORMATION

OBJ = .153523-01

DECISION VARIABLES (X-VECTOR)

1)	.65000+00	.16000+01	.50000-02	.25000-01	.10000-01	.50000-02
7)	.50000-02	.20000-01				

CONSTRAINT VALUES (G-VECTOR)

1)	-.67884+01	-.10265+02	-.10965+02	-.19207+01	-.14201+02	-.14201+02
7)	-.99000+03	-.13816+02	-.43404+01	-.23356+02	-.22904+02	-.23237+01
13)	-.99000+03	-.17907+02	-.24031+01	-.39535+01		

ITER = 1 OBJ = .14670-01

DECISION VARIABLES (X-VECTOR)

1)	.64087+00	.15816+01	.49158-02	.24826-01	.99558-02	.48765-02
7)	.48765-02	.18518-01				

CONSTRAINT VALUES (G-VECTOR)

1)	-.62127+01	-.90628+01	-.45960+01	.71153-03	-.91284+01	-.91284+01
7)	-.99000+03	-.90308+01	-.24828+01	-.16905+02	-.16040+02	-.16452+01
13)	-.99000+03	-.17215+02	-.27407+01	-.46962+01		

ITER = 2 OBJ = .14536-01

DECISION VARIABLES (X-VECTOR)

1)	.64470+00	.17239+01	.47669-02	.25291-01	.99846-02	.47410-02
7)	.48131-02	.18195-01				

CONSTRAINT VALUES (G-VECTOR)

1)	-.59002+01	-.88913+01	-.44770+01	-.95391-01	-.11449+02	-.11449+02
7)	-.99000+03	-.88354+01	-.19675+01	-.12987+02	-.16407+02	-.37656+01
13)	-.99000+03	-.17211+02	-.27004+01	-.49549+01		

ITER = 3 OBJ = .14114-01

DECISION VARIABLES (X-VECTOR)

1)	.60415+00	.19230+01	.35788-02	.26301-01	.10150-01	.40841-02
7)	.46560-02	.18959-01				

CONSTRAINT VALUES (G-VECTOR)

1)	-.49854+01	-.92291+01	-.34548+01	-.25164-01	-.11973+02	-.11973+02
7)	-.99000+03	-.70801-01	-.12692+01	-.39850+01	-.11825+02	-.53428+01
13)	-.99000+03	-.18628+02	-.17312+01	-.51000+01		

```
ITER =    4     OBJ =     .14114-01     NO CHANGE IN OBJ

DECISION VARIABLES (X-VECTOR)
  1)      .60415+00    .19230+01    .35788-02    .26301-01    .10150-01    .40841-02
  7)      .46560-02    .18959-01

CONSTRAINT VALUES (G-VECTOR)
  1)     -.49854+01   -.92291+01   -.34548+01   -.25164-01   -.11973+02   -.11973+02
  7)     -.99000+03   -.70801-01   -.12692+01   -.39850+01   -.11825+02   -.53428+01
 13)     -.99000+03   -.18628+02   -.17312+01   -.51000+01


ITER =    5     OBJ =     .14109-01

DECISION VARIABLES (X-VECTOR)
  1)      .60359+00    .19237+01    .35618-02    .26308-01    .10152-01    .40760-02
  7)      .46550-02    .18975-01

CONSTRAINT VALUES (G-VECTOR)
  1)     -.49764+01   -.92364+01   -.34474+01   -.25755-01   -.11966+02   -.11966+02
  7)     -.99000+03    .24414-02   -.12666+01   -.39173+01   -.11776+02   -.53260+01
 13)     -.99000+03   -.18649+02   -.17176+01   -.50983+01


ITER =    6     OBJ =     .14097-01

DECISION VARIABLES (X-VECTOR)
  1)      .60101+00    .19095+01    .35317-02    .26363-01    .10171-01    .40321-02
  7)      .46459-02    .19071-01

CONSTRAINT VALUES (G-VECTOR)
  1)     -.49249+01   -.92831+01   -.34047+01   -.25404-01   -.11852+02   -.11852+02
  7)     -.99000+03   -.21973-01   -.12618+01   -.39492+01   -.11535+02   -.50626+01
 13)     -.99000+03   -.18772+02   -.16376+01   -.50867+01


ITER =    7     OBJ =     .14056-01

DECISION VARIABLES (X-VECTOR)
  1)      .59238+00    .18752+01    .34213-02    .26645-01    .10273-01    .38792-02
  7)      .46324-02    .19347-01

CONSTRAINT VALUES (G-VECTOR)
  1)     -.47587+01   -.94231+01   -.32731+01   -.22722-01   -.11527+02   -.11527+02
  7)     -.99000+03    .24414-02   -.12386+01   -.38824+01   -.10754+02   -.44017+01
 13)     -.99000+03   -.19141+02   -.13957+01   -.50620+01
```

ITER = 8 OBJ = .13995-01

DECISION VARIABLES (X-VECTOR)

1)	.57730+00	.18077+01	.32778-02	.27186-01	.10557-01	.35286-02
7)	.45573-02	.19985-01				

CONSTRAINT VALUES (G-VECTOR)

1)	-.43217+01	-.97708+01	-.29230+01	-.43438-02	-.10758+02	-.10758+02
7)	-.99000+03	-.21729+00	-.11478+01	-.40299+01	-.92101+01	-.32667+01
13)	-.99000+03	-.20038+02	-.80280+00	-.50301+01		

ITER = 9 OBJ = .13988-01

DECISION VARIABLES (X-VECTOR)

1)	.57689+00	.18173+01	.32437-02	.27222-01	.10562-01	.35079-02
7)	.45548-02	.20010-01				

CONSTRAINT VALUES (G-VECTOR)

1)	-.42960+01	-.97865+01	-.29224+01	-.17430-01	-.10854+02	-.10854+02
7)	-.99000+03	.24414-02	-.11356+01	-.38145+01	-.92000+01	-.33612+01
13)	-.99000+03	-.20081+02	-.77393+00	-.50331+01		

ITER = 10 OBJ = .13915-01

DECISION VARIABLES (X-VECTOR)

1)	.56560+00	.18261+01	.32472-02	.28870-01	.11040-01	.29009-02
7)	.45056-02	.20542-01				

CONSTRAINT VALUES (G-VECTOR)

1)	-.35440+01	-.10154+02	-.25212+01	-.47732-01	-.11243+02	-.11243+02
7)	-.99000+03	-.29053+00	-.79232+00	-.38732+01	-.80013+01	-.37363+01
13)	-.99000+03	-.21203+02	-.59605-06	-.51894+01		

ITER = 11 OBJ = .13893-01

DECISION VARIABLES (X-VECTOR)

1)	.56546+00	.18257+01	.32464-02	.28865-01	.11039-01	.29018-02
7)	.45078-02	.20477-01				

CONSTRAINT VALUES (G-VECTOR)

1)	-.35367+01	-.10105+02	-.24598+01	.14558-03	-.11147+02	-.11147+02
7)	-.99000+03	-.24170+00	-.74241+00	-.38145+01	-.78458+01	-.37185+01
13)	-.99000+03	-.21161+02	-.22954-01	-.52178+01		

ITER = 12 OBJ = .13887-01

DECISION VARIABLES (X-VECTOR)

1)	.56475+00	.18402+01	.32242-02	.28922-01	.11049-01	.28940-02
7)	.45117-02	.20463-01				

CONSTRAINT VALUES (G-VECTOR)

1)	-.35291+01	-.10101+02	-.24721+01	-.11959-01	-.11283+02	-.11283+02
7)	-.99000+03	.24414-02	-.73033+00	-.35810+01	-.78373+01	-.38982+01
13)	-.99000+03	-.21158+02	-.23578-01	-.52268+01		

ITER = 13 OBJ = .13815-01

DECISION VARIABLES (X-VECTOR)

1)	.53542+00	.17995+01	.29806-02	.32955-01	.12198-01	.25817-02
7)	.47929-02	.20342-01				

CONSTRAINT VALUES (G-VECTOR)

1)	-.34681+01	-.10156+02	-.25946+01	-.48883-01	-.11289+02	-.11289+02
7)	-.99000+03	-.26611+00	-.78760+00	-.34299+01	-.63394+01	-.34595+01
13)	-.99000+03	-.21128+02	-.30824-01	-.53022+01		

ITER = 14 OBJ = .13793-01

DECISION VARIABLES (X-VECTOR)

1)	.53517+00	.17988+01	.29793-02	.32948-01	.12196-01	.25802-02
7)	.47893-02	.20287-01				

CONSTRAINT VALUES (G-VECTOR)

1)	-.34519+01	-.10112+02	-.25245+01	.12994-03	-.11185+02	-.11185+02
7)	-.99000+03	-.21729+00	-.73250+00	-.33716+01	-.61714+01	-.34365+01
13)	-.99000+03	-.21102+02	-.43121-01	-.53314+01		

ITER = 15 OBJ = .13787-01

DECISION VARIABLES (X-VECTOR)

1)	.53473+00	.18141+01	.29620-02	.32990-01	.12203-01	.25704-02
7)	.47838-02	.20281-01				

CONSTRAINT VALUES (G-VECTOR)

1)	-.34311+01	-.10113+02	-.25277+01	-.12836-01	-.11335+02	-.11335+02
7)	-.99000+03	.24414-02	-.71021+00	-.31451+01	-.61598+01	-.36265+01
13)	-.99000+03	-.21118+02	-.30377-01	-.53440+01		

ITER = 16 OBJ = .13651-01

DECISION VARIABLES (X-VECTOR)

1)	.55279+00	.19502+01	.28751-02	.41428-01	.15768-01	.18280-02
7)	.51512-02	.19106-01				

CONSTRAINT VALUES (G-VECTOR)

1)	-.27439+01	-.10045+02	-.24652+01	-.59120-01	-.13355+02	-.13355+02
7)	-.99000+03	-.33936+00	-.25852-02	-.30217+01	-.82441+01	-.72854+01
13)	-.99000+03	-.20904+02	-.34731-01	-.61754+01		

ITER = 17 OBJ = .13614-01

DECISION VARIABLES (X-VECTOR)

1)	.54212+00	.19160+01	.28219-02	.41222-01	.15730-01	.18396-02
7)	.52496-02	.19052-01				

CONSTRAINT VALUES (G-VECTOR)

1)	-.28763+01	-.99402+01	-.24917+01	-.92387-05	-.13024+02	-.13024+02
7)	-.99000+03	-.43701+00	-.77169-01	-.31200+01	-.73153+01	-.64783+01
13)	-.99000+03	-.20725+02	-.16228+00	-.61267+01		

ITER = 18 OBJ = .13601-01

DECISION VARIABLES (X-VECTOR)

1)	.53728+00	.19282+01	.27371-02	.41288-01	.15773-01	.17988-02
7)	.52228-02	.19185-01				

CONSTRAINT VALUES (G-VECTOR)

1)	-.28123+01	-.10012+02	-.24669+01	-.24382-01	-.13066+02	-.13066+02
7)	-.99000+03	-.21973-01	-.70781-01	-.27152+01	-.69695+01	-.64766+01
13)	-.99000+03	-.20897+02	-.51451-01	-.61046+01		

ITER = 19 OBJ = .13593-01

DECISION VARIABLES (X-VECTOR)

1)	.53531+00	.19225+01	.27106-02	.41321-01	.15804-01	.17797-02
7)	.52101-02	.19246-01				

CONSTRAINT VALUES (G-VECTOR)

1)	-.27820+01	-.10040+02	-.24445+01	-.24977-01	-.13027+02	-.13027+02
7)	-.99000+03	.24414-02	-.66978-01	-.27045+01	-.67978+01	-.63276+01
13)	-.99000+03	-.20976+02	.66906-04	-.60949+01		

```
ITER =   20     OBJ =     .13540-01

DECISION VARIABLES (X-VECTOR)
  1)      .51583+00    .18643+01    .24809-02    .42364-01    .16682-01    .17256-02
  7)      .53304-02    .19269-01

CONSTRAINT VALUES (G-VECTOR)
  1)     -.28712+01   -.10052+02   -.25130+01   -.15938-01   -.12644+02   -.12644+02
  7)     -.99000+03   -.19287+00   -.18898+00   -.30110+01   -.53851+01   -.50401+01
 13)     -.99000+03   -.20903+02   -.58713-01   -.60375+01
```

```
FINAL OPTIMIZATION INFORMATION

 OBJ =     .135405-01

 DECISION VARIABLES (X-VECTOR)
   1)      .51583+00    .18643+01    .24809-02    .42364-01    .16682-01    .17256-02
   7)      .53304-02    .19269-01

 CONSTRAINT VALUES (G-VECTOR)
   1)     -.28712+01   -.10052+02   -.25130+01   -.15938-01   -.12644+02   -.12644+02
   7)     -.99000+03   -.19287+00   -.18898+00   -.30110+01   -.53851+01   -.50401+01
  13)     -.99000+03   -.20903+02   -.58713-01   -.60375+01

 THERE ARE    1 ACTIVE CONSTRAINTS
 CONSTRAINT NUMBERS ARE
     4

 THERE ARE    0 VIOLATED CONSTRAINTS

 THERE ARE    0 ACTIVE SIDE CONSTRAINTS

 TERMINATION CRITERION
      ITER EQUALS ITMAX

 NUMBER OF ITERATIONS =   20

 OBJECTIVE FUNCTION WAS EVALUATED          213  TIMES

 CONSTRAINT FUNCTIONS WERE EVALUATED       213  TIMES
```

OPTIMIZATION RESULTS

OBJECTIVE FUNCTION
GLOBAL LOCATION 51 FUNCTION VALUE .13540-01

DESIGN VARIABLES

ID	D. V. NO.	GLOBAL VAR. NO.	LOWER BOUND	VALUE	UPPER BOUND
1	1	21	.00000	.51583+00	.10000+01
2	2	25	.00000	.18643+01	.20000+01
3	3	31	.00000	.24809-02	.11000+16
4	4	32	.00000	.42364-01	.11000+16
5	5	36	.00000	.16682-01	.11000+16
6	6	37	.00000	.17256-02	.11000+16
7	7	38	.00000	.53304-02	.11000+16
8	8	39	.00000	.19269-01	.11000+16
9	1	22	.00000	.51583+00	.10000+01
10	4	34	.00000	.42364-02	.11000+15

DESIGN CONSTRAINTS

ID	GLOBAL VAR. NO.	LOWER BOUND	VALUE	UPPER BOUND
1	1	.00000	.28712+00	.11000+16
2	2	.00000	.10052+01	.11000+16
3	3	.00000	.25130+00	.11000+16
4	4	.00000	.15938-02	.11000+16
5	5	.00000	.12644+01	.11000+16
6	6	.00000	.12644+01	.11000+16
7	7	.00000	.99000+02	.11000+16
8	8	.00000	.19287-01	.11000+16
9	9	.00000	.18898-01	.11000+16
10	10	.00000	.30110+00	.11000+16
11	11	.00000	.53851+00	.11000+16
12	12	.10000+00	.60401+00	.11000+16
13	13	.00000	.99000+02	.11000+16
14	14	.00000	.20903+01	.11000+16
15	15	.00000	.58713-02	.11000+16
16	16	.00000	.60375+00	.11000+16

WEIGHT/(UNIT PLAN AREA) = .01354

* * * MARGIN OF SAFETY SUMMARY * * *

MODE	DESCRIPTION	LOADING CASE NO. 1	2	3	4	5
1	SHEAR STIFFNESS	.287	.287			
2	LONGIT. STIFFNESS	1.005	1.005			
3	SKIN STRENGTH	.251	2.265			
4	STRAIN LIMITATION	.002	.324			
5	L. FLANGE STRENGTH	1.264	1.929			
6	R. FLANGE STRENGTH	1.264	1.929			
7	WEB STRENGTH	99.000	99.000			
8	STIF. LOCAL BUCKLING	.019	.927			
9	SKIN LOCAL BUCKLING	99.000	.019			
10	ROLLING BUCKLING	.301	1.514			
11	TORS./FLEX. BUCKLING	.539	2.665			
12	EULER BUCKLING	.604	1.647			
13	SKIN/STIF. INTERFACE	99.000	99.000			
14	SKIN LAYUP (LONGIT.)	2.090	2.090			
15	SKIN LAYUP (INTERM.)	.006	.006			
16	SKIN LAYUP (TRANSV.)	.604	.604			

MINIMUM MARGIN OF SAFETY = .002

CRITICAL MODE = 4
LOADING CASE = 1

PLY NO. 14 IS CRITICAL ORIENTATION = 90.

STRAINS ARE: EPS1 = .002899 EPS2 = -.003994 EPS12 = -.002331

ALLOW. STRAINS ARE: EPS1 = .004500 EPS2 = .004500 EPS12 = .020000
EPS1 = -.004000 EPS2 = -.004000

PROGRAM CALLS TO ANALIZ

ICALC	CALLS
1	1
2	214
3	2

EXAMPLE 3 - FINAL SIZING

The optimum design produced in the preceding example requires all lamina thicknesses to be rounded to integer multiples of the available ply thickness, 0.005 inches in this instance. Some of the thicknesses are rounded up and some are rounded down as shown in the new subset and element definitions in the following output. A new sizing is performed in which only stiffener height and free flange width are varied. The optimum achieved is 2.2 percent heavier than that achieved in Example 2. Only 30 calls to ANALIZ were required in this optimization. The final design is shown in Figure 13. The input data are listed on the following pages. The output follows the input data listing.

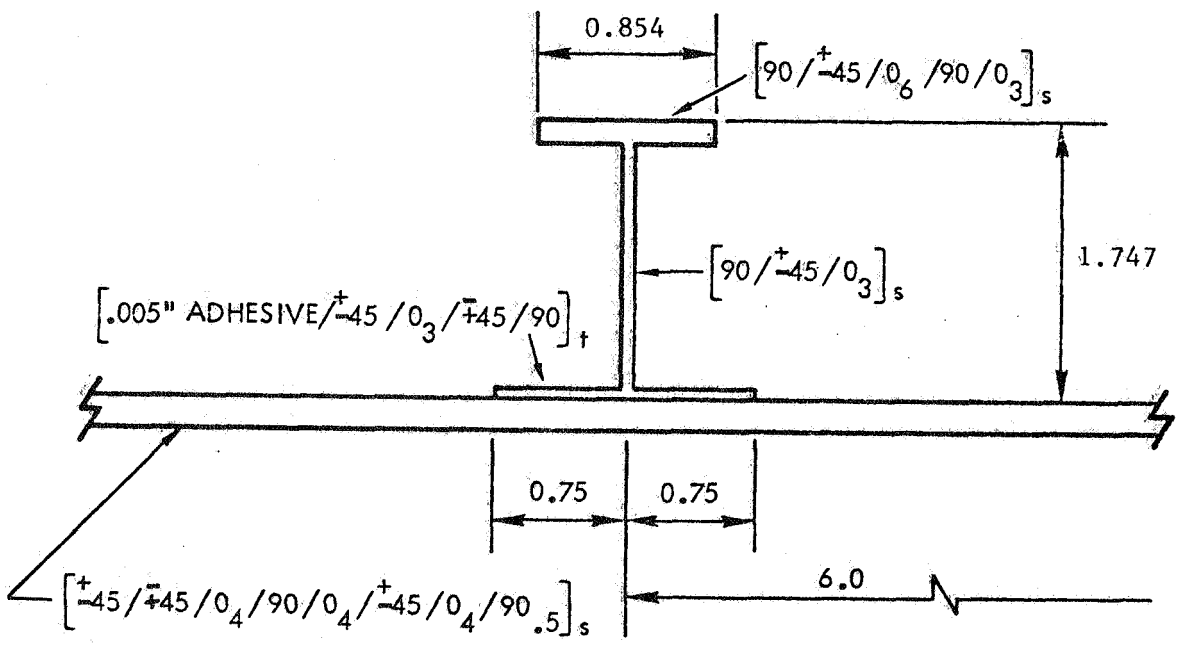

Figure 13. Optimum I-Stiffened Panel Final Design

```
                    INPUT DATA:   PAGE   1
 LINE
NUMBER  ***************************** DATA ************************************

  1              *****     EXAMPLE 3 -- I-SECTION FINAL SIZING     *****
   C.....RECORD S2 - PROGRAM CONTROL PARAMETERS: NCALC,NDV,IPNPUT
  2    2  2  1
   C.....RECORD S3 - OPTIMIZATION CONTROL INTEGER PARAMETERS:
   C                 IPRINT,ITMAX,ICNDIR,NSCAL,ITRM,LINOBJ,NACMX1
  3    2  20  0  3  0  0  10
   C.....RECORD S4 - OPTIM. CONTROL FLOATING POINT PARAMETERS: FDCH,FDCHM
  4    0.  .00001
   C.....RECORD S5 - OPTIM. CONTROL FLOATING POINT PARAMETERS: DELFUN,DABFUN
  5    0.  .00001
   C.....RECORD S6 - BASIC OPTIMIZATION INFORMATION: NDVTOT,IOBJ,SGNOPT
  6    3  51  -1.
   C.....REPEAT RECORD S7 NDV TIMES
   C.....RECORD S7 - DESIGN VARIABLE BOUNDS: VLB,VUB
  7    0.  1.0                  $ W(1)
  8    0.  2.0                  $ H
   C.....REPEAT RECORD S8 NDVTOT TIMES
   C.....RECORD S8 - DESIGN VARIABLE IDENTIFICATION: NDSGN,IDSGN,AMULT
  9    1  21                    $ W(1)
 10    2  25                    $ H
 11    1  22                    $ W(2)=W(1)
   C.....RECORD S9 - NUMBER OF CONSTRAINT SETS: NCONS
 12    3
   C.....REPEAT RECORDS S10 AND S11 NCONS TIMES
   C.....RECORD S10 - CONTRIANTS SET IDENTIFICATION: ICON,JCON,KCON
 13    1  11                    $ CONSTRAINTS 1 - 11
   C.....RECORD S11 - CONSTRAINT SET BOUNDS: BL,BU
 14    0.  1.E16
 15    12  12                   $ CONSTRAINT 12
 16    0.1  1.E16
 17    13  16                   $ CONSTRAINTS 13 - 16
 18    0.  1.E16
   C.....RECORD S12 - END OF SIZING DATA
 19    SIZ
   C.....RECORD A1 - ANALYSIS CONTROL DATA: IWRITE,NLOADS,NMAT
 20    0  2  3
   C.....RECORD A2 - GEOMETRY: W(1),W(2),W(3),W(4),H,BS,XL
 21    .50  .50  .75  .75  1.8  6.  20.
   C.....REPEAT RECORDS A3 AND A4 FOR EACH NONZERO PLATE ELEMENT
   C.....RECORD A3 - PLATE ELEMENT SYMMETRY AND REPEAT INDICATORS:  NSYM,NLS,NREP
 22    1  5                  $ W(1)
   C.....RECORD A4 - PLATE ELEMENT SUBSET IDENTIFICATION NUMBERS: LS
 23    3  1  2  3  6
 24    1  5                  $ W(2)
 25    3  1  2  3  6
 26    0  5                  $ W(3)
 27    5  1  6  -1  3
 28    0  5                  $ W(4)
```

INPUT DATA: PAGE 2

```
LINE
NUMBER  ************************** DATA ************************************

 29    5  1  6  -1  3
 30    1  3                  $ H, WEB
 31    3  1  6
 32    1  9                 $ BS, SKIN
 33    8  -8  9  10  10  9  7  9  10
   C.....RECORD A5 - NUMBER OF LAMINATE SUBSETS TO BE DEFINED: NSUBS
 34    10
   C.....REPEAT RECORDS A6,A7 AND A8 NSUBS TIMES
   C.....RECORD A6 - NUMBER OF PLIES: NPLY
 35    2                     $ SUBSET NO. 1
   C.....RECORD A7 - PLY THICKNESS: TPLY
 36    .005
   C.....RECORD A8 - PLY ORIENTATIONS: THETA
 37    45.  -45.
 38    1                     $ SUBSET NO. 2
 39    .030
 40    0.
 41    1                     $ SUBSET NO. 3
 42    .005
 43    90.
 44    1                     $ SUBSET NO. 4
 45    .0025
 46    90.
 47    1                     $ SUBSET NO. 5
 48    .005
 49    0.
 50    1                     $ SUBSET NO. 6
 51    .015
 52    0.
 53    2                     $ SUBSET NO. 7
 54    .005
 55    45.  -45.
 56    2                     $ SUBSET NO. 8
 57    .005
 58    45.  -45.
 59    1                     $ SUBSET NO. 9
 60    .020
 61    0.
 62    1                     $ SUBSET NO. 10
 63    .0025
 64    90.
   C.....REPEAT RECORDS A9,A10 AND A11 NMAT TIMES
   C.....RECORD A9: MATERIAL CODE NUMBER: MAT
 65    2                     $ MATERIAL NO. 1 (ORTHOTROPIC)
   C.....RECORD A10 - MATERIAL PROPERTIES: E'S,G,NU,ALPHA'S,RHO
 66    .185E8  .164E7  .870E6  .300  .240E-6  .162E-4  .057
   C.....RECORD A11 - MATERIAL ALLOWABLES: STRAINS:  0T,0C,90T,90C,S
   C                                       STRESSES: 0T,0C,90T,90C,S
```

INPUT DATA: PAGE 3

```
LINE
NUMBER ***************************** DATA ***********************************

 67    .653E-2  .670E-2  .500E-2  .100E-1  .133-1,
 68    .133E6  .124E6  .840E4  .164E5  .116E6
 69    2                    $ MATERIAL NO. 2 (ORTHOROPIC)
 70    .185E8  .164E7  .870E6  .300  .240E-6  .162E-4  .057
 71    .980E-2  .1005E-1  .750E-2  .150E-1  .200-1,
 72    .200E6  .186E6  .126E5  .246E5  .174E6
 73    1                    $ MATERIAL NO. 3 (ISOTROPIC)
 74    .245E6  .943E5  .300  .144E-4  .050
 75    .0257  .122  .0954  6300.  30000.  9000.
   C.....REPEAT RECORDS A12,A13,A14,A15 AND A16 NLOADS TIMES
   C.....RECORD A12 - ADDITIONAL ANALYSIS CONTROL DATA: MOPT,ICLAMP,NOBUCK
 76    1  0  0              $ LOAD CASE NO. 1 (ULTIMATE LOAD)
   C.....RECORD A13 - LOADS AND ECCENTRICITIES: XN1,XN2,XN3,PRESS,DELT,DEL,DELNX
 77    -9000.  0.  900.  0.  0.  .001  0.
   C.....RECORD A14 - MATERIAL SPECIFICATION: MATNO
 78    2  2  2  2  3  2  2  2  2  2
   C.....RECORD A15 - STIFFNESS REQUIREMENTS: GTREQ,ETREQ
 79    .3E6  1.5E6
   C.....RECORD A16 - DESIGN STRAIN LIMITATIONS: 0T,0C,90T,90C
 80    .0045  .0040  .0045  .0040
 81    1  0  1              $ LOAD CASE NO. 2 (LIMIT LOAD)
 82    -6000.  0.  600.  0.  0.  .001  0.
 83    1  1  1  1  3  1  1  1  1  1
 84    .3E6  1.5E6
 85    .0030  .0027  .0030  .0027
   C.....SKIN LAYUP DESIGN CONSTRAINTS: THETAA,SKRAT(1),SKRAT(2),SKRAT(3)
 86    0.0  0.2  0.3  0.05
   C.....RECORD A18 - END OF DATA
 87    END
```

Output for Example 3.

```
TITLE:
        *****    EXAMPLE 3 — I-SECTION FINAL SIZING    *****


CONTROL PARAMETERS:
CALCULATION CONTROL,                    NCALC =    2
NUMBER OF GLOBAL DESIGN VARIABLES,      NDV =    2
INPUT INFORMATION PRINT CODE,         IPNPUT =    1


CALCULATION CONTROL, NCALC
VALUE   MEANING
  1     SINGLE ANALYSIS
  2     OPTIMIZATION



* * OPTIMIZATION INFORMATION

GLOBAL VARIABLE NUMBER OF OBJECTIVE            =   51
MULTIPLIER (NEGATIVE INDICATES MINIMIZATION) =   -.1000+01

CONMIN PARAMETERS (IF ZERO, CONMIN DEFAULT WILL OVER-RIDE)

IPRINT  ITMAX   ICNDIR   NSCAL   ITRM   LINOBJ  NACMX1   NFDG
  2      20       0       3       0       0      10       0

 FDCH            FDCHM           CT              CTMIN
   .00000          .10000-04       .00000          .00000

 CTL             CTLMIN          THETA           PHI
   .00000          .00000          .00000          .00000

 DELFUN          DABFUN          ALPHAX          ABOBJ1
   .00000          .10000-04       .00000          .00000

DESIGN VARIABLE INFORMATION
NON-ZERO INITIAL VALUE WILL OVER-RIDE MODULE INPUT
D. V.     LOWER          UPPER          INITIAL
NO.       BOUND          BOUND           VALUE          SCALE
  1       .00000         .10000+01       .00000         .00000
  2       .00000         .20000+01       .00000         .00000


DESIGN VARIABLES
      D. V.     GLOBAL     MULTIPLYING
ID    NO.      VAR. NO.     FACTOR
 1     1         21         .10000+01
 2     2         25         .10000+01
 3     1         22         .10000+01
```

CONSTRAINT INFORMATION

THERE ARE 3 CONSTRAINT SETS

ID	GLOBAL VAR. 1	GLOBAL VAR. 2	LINEAR ID	LOWER BOUND	NORMALIZATION FACTOR	UPPER BOUND	NORMALIZATION FACTOR
1	1	11	0	.00000	.10000+00	.11000+16	.11000+16
12	12	12	0	.10000+00	.10000+00	.11000+16	.11000+16
13	13	16	0	.00000	.10000+00	.11000+16	.11000+16

TOTAL NUMBER OF CONSTRAINED PARAMETERS = 16

* * ESTIMATED DATA STORAGE REQUIREMENTS

REAL			INTEGER		
INPUT	EXECUTION	AVAILABLE	INPUT	EXECUTION	AVAILABLE
86	340	5000	59	109	1000

```
* * * * * * * * * * * * * * * * * * * * * * * * * * * * * * * * * * * * *

        *****    EXAMPLE 3 — I-SECTION FINAL SIZING    *****

* * * * * * * * * * * * * * * * * * * * * * * * * * * * * * * * * * * * *

                    * * * * * * * * * * *

                    * * * P O S T O P * * *

                    * * * * * * * * * * *

        * * * * POSTBUCKLED OPEN-STIFFENED OPTIMUM PANELS * * * *

        ANALYSIS AND SIZING OF COMPOSITE PANELS WITH OPEN-SECTION
        STIFFENERS SUBJECTED TO GENERAL INPLANE LOADS AND UNIFORM
        PRESSURE. PANELS MAY BE LOADED IN THE POSTBUCKLING RANGE.

        * * * * LOCKHEED GEORGIA COMPANY * * * JUNE  1983 * * * *


IWRITE = 0     NLOADS = 2     NMAT = 3     NSTMX = 2     NITER =12     NMAX = 0


FLANGE WIDTHS:      W1 =  .500     W2 =  .500     W3 =  .750     W4 =  .750

STIFFENER HEIGHT = 1.800   STIFFENER SPACING = 6.000   PANEL LENGTH = 20.00


ELEMENT LAMINATE CONFIGURATIONS:

FLANGE 1    NSYM= 1   NLSS= 5   NREP= 0   SUBSETS:  3  1  2  3  6
FLANGE 2    NSYM= 1   NLSS= 5   NREP= 0   SUBSETS:  3  1  2  3  6
FLANGE 3    NSYM= 0   NLSS= 5   NREP= 0   SUBSETS:  5  1  6 -1  3
FLANGE 4    NSYM= 0   NLSS= 5   NREP= 0   SUBSETS:  5  1  6 -1  3
WEB         NSYM= 1   NLSS= 3   NREP= 0   SUBSETS:  3  1  6
SKIN        NSYM= 1   NLSS= 9   NREP= 0   SUBSETS:  8 -8  9 10 10  9  7  9
                                                    10


THE FOLLOWING LAMINATE SUBSETS ARE DEFINED:

 1    2 PLIES   PLY THICKNESS=  .00500   ORIENTATIONS:  45 -45
 2    1 PLY     PLY THICKNESS=  .03000   ORIENTATION :   0
 3    1 PLY     PLY THICKNESS=  .00500   ORIENTATION :  90
 4    1 PLY     PLY THICKNESS=  .00250   ORIENTATION :  90
 5    1 PLY     PLY THICKNESS=  .00500   ORIENTATION :   0
 6    1 PLY     PLY THICKNESS=  .01500   ORIENTATION :   0
 7    2 PLIES   PLY THICKNESS=  .00500   ORIENTATIONS:  45 -45
 8    2 PLIES   PLY THICKNESS=  .00500   ORIENTATIONS:  45 -45
 9    1 PLY     PLY THICKNESS=  .02000   ORIENTATION :   0
10    1 PLY     PLY THICKNESS=  .00250   ORIENTATION :  90
```

THE FOLLOWING MATERIALS ARE SPECIFIED:

MATERIAL NO. 1 CODE = 2 RHO = .570-01

E11= .185+08	G12= .870+06	NU12= .300+00	ALPHA1= .240-06
E22= .164+07	G13= .870+06	NU13= .300+00	ALPHA2= .162-04
E33= .164+07	G23= .870+06	NU23= .300+00	ALPHA3= .162-04

ALLOWABLE STRAIN AND STRESS VALUES:

	0-DEGREE TENSION	0-DEGREE COMPRESS.	90-DEGREE TENSION	90-DEGREE COMPRESS.	SHEAR
STRAIN	.653-02	.670-02	.500-02	.100-01	.133-01
STRESS	.133+06	.124+06	.840+04	.164+05	.116+06

MATERIAL NO. 2 CODE = 2 RHO = .570-01

E11= .185+08	G12= .870+06	NU12= .300+00	ALPHA1= .240-06
E22= .164+07	G13= .870+06	NU13= .300+00	ALPHA2= .162-04
E33= .164+07	G23= .870+06	NU23= .300+00	ALPHA3= .162-04

ALLOWABLE STRAIN AND STRESS VALUES:

	0-DEGREE TENSION	0-DEGREE COMPRESS.	90-DEGREE TENSION	90-DEGREE COMPRESS.	SHEAR
STRAIN	.980-02	.101-01	.750-02	.150-01	.200-01
STRESS	.200+06	.186+06	.126+05	.246+05	.174+06

MATERIAL NO. 3 CODE = 1 RHO = .500-01

E11= .245+06	G12= .943+05	NU12= .300+00	ALPHA1= .144-04
E22= .245+06	G13= .943+05	NU13= .300+00	ALPHA2= .144-04
E33= .245+06	G23= .943+05	NU23= .300+00	ALPHA3= .144-04

ALLOWABLE STRAIN AND STRESS VALUES:

	0-DEGREE TENSION	0-DEGREE COMPRESS.	90-DEGREE TENSION	90-DEGREE COMPRESS.	SHEAR
STRAIN	.257-01	.122+00	.257-01	.122+00	.954-01
STRESS	.630+04	.300+05	.630+04	.300+05	.900+04

```
                    * * * * * * * * * * * * * * * *
                    * * * LOAD CASE NUMBER  1 * * *
                    * * * * * * * * * * * * * * * *

MOPT = 1     ICLAMP = 0     NOBUCK = 0
ISEP = 0     NPX  = 0       NPY    = 0     NSEP   = 0

APPLIED LOADS (FORCE/UNIT WIDTH):  NX = -9000.   NY =     0.   NXY =   900.

PRESSURE =     .00                 TEMPERATURE DIFF. =    0.

INITIAL ECCEN./LENGTH = .0010      AXIAL LOAD ECCEN. = .0000


SUBSET MATERIAL SPECIFICATION:

SUBSET  1     MATERIAL NO.  2
SUBSET  2     MATERIAL NO.  2
SUBSET  3     MATERIAL NO.  2
SUBSET  4     MATERIAL NO.  2
SUBSET  5     MATERIAL NO.  3
SUBSET  6     MATERIAL NO.  2
SUBSET  7     MATERIAL NO.  2
SUBSET  8     MATERIAL NO.  2
SUBSET  9     MATERIAL NO.  2
SUBSET 10     MATERIAL NO.  2


REQUIRED SHEAR STIFFNESS, GTREQ =  .3000+06
REQUIRED AXIAL STIFFNESS, ETREQ =  .1500+07

STRAIN LIMITATIONS IN SKIN  (MEMBRANE ONLY)

0-DEG. TENSION    0-DEG. COMPRESS.    90-DEG. TENSION    90-DEG. COMPRESS.
     .0045             .0040               .0045              .0040
```

```
* * * * * * * * * * * * * * * * *
* * * LOAD CASE NUMBER  2 * * *
* * * * * * * * * * * * * * * * *


MOPT = 1     ICLAMP = 0     NOBUCK = 1
ISEP = 0     NPX  = 0       NPY    = 0     NSEP   = 0


APPLIED LOADS (FORCE/UNIT WIDTH):  NX = -6000.   NY =     0.   NXY =   600.

PRESSURE =    .00                  TEMPERATURE DIFF. =    0.

INITIAL ECCEN./LENGTH = .0010      AXIAL LOAD ECCEN. = .0000



SUBSET MATERIAL SPECIFICATION:

SUBSET  1     MATERIAL NO.  1
SUBSET  2     MATERIAL NO.  1
SUBSET  3     MATERIAL NO.  1
SUBSET  4     MATERIAL NO.  1
SUBSET  5     MATERIAL NO.  3
SUBSET  6     MATERIAL NO.  1
SUBSET  7     MATERIAL NO.  1
SUBSET  8     MATERIAL NO.  1
SUBSET  9     MATERIAL NO.  1
SUBSET 10     MATERIAL NO.  1


REQUIRED SHEAR STIFFNESS, GTREQ =  .3000+06
REQUIRED AXIAL STIFFNESS, ETREQ =  .1500+07

STRAIN LIMITATIONS IN SKIN  (MEMBRANE ONLY)

0-DEG. TENSION    0-DEG. COMPRESS.    90-DEG. TENSION    90-DEG. COMPRESS.
    .0030             .0027               .0030              .0027



SKIN LAYUP DESIGN CONSTRAINTS -- THETAA =   .0

  SKRAT(1)     SKRAT(2)     SKRAT(3)
    .200         .300         .050
```

WEIGHT/(UNIT PLAN AREA) = .01391

* * * MARGIN OF SAFETY SUMMARY * * *

MODE	DESCRIPTION	LOADING CASE NO. 1	2	3	4	5
1	SHEAR STIFFNESS	.357	.357			
2	LONGIT. STIFFNESS	1.051	1.051			
3	SKIN STRENGTH	.338	2.333			
4	STRAIN LIMITATION	.055	.353			
5	L. FLANGE STRENGTH	1.334	1.959			
6	R. FLANGE STRENGTH	1.334	1.959			
7	WEB STRENGTH	99.000	99.000			
8	STIF. LOCAL BUCKLING	.093	1.001			
9	SKIN LOCAL BUCKLING	99.000	.109			
10	ROLLING BUCKLING	.314	1.484			
11	TORS./FLEX. BUCKLING	.633	2.984			
12	EULER BUCKLING	.515	1.493			
13	SKIN/STIF. INTERFACE	99.000	99.000			
14	SKIN LAYUP (LONGIT.)	2.077	2.077			
15	SKIN LAYUP (INTERM.)	.026	.026			
16	SKIN LAYUP (TRANSV.)	.538	.538			

MINIMUM MARGIN OF SAFETY = .026

CRITICAL MODE = 15
LOADING CASE = 1

REQUIRED ZONE(2) SKIN MATERIAL PROPORTION = .300

INITIAL FUNCTION INFORMATION

OBJ = .139087-01

DECISION VARIABLES (X-VECTOR)

1)	.50000+00	.18000+01

CONSTRAINT VALUES (G-VECTOR)

1)	-.35700+01	-.10515+02	-.33847+01	-.54581+00	-.13341+02	-.13341+02
7)	-.99000+03	-.92529+00	-.10657+01	-.31363+01	-.63267+01	-.41492+01
13)	-.99000+03	-.20769+02	-.25641+00	-.53846+01		

```
ITER =    1     OBJ =     .13748-01

DECISION VARIABLES (X-VECTOR)
  1)      .46150+00    .16848+01

CONSTRAINT VALUES (G-VECTOR)
  1)     -.35700+01   -.10275+02   -.26545+01   -.34384-02   -.10575+02   -.10575+02
  7)     -.99000+03   -.18042+01   -.93096+00   -.38181+01   -.23657+01   -.20874+01
 13)     -.99000+03   -.20769+02   -.25641+00   -.53846+01


ITER =    2     OBJ =     .13713-01

DECISION VARIABLES (X-VECTOR)
  1)      .42391+00    .17864+01

CONSTRAINT VALUES (G-VECTOR)
  1)     -.35700+01   -.10200+02   -.28048+01   -.11957+00   -.11355+02   -.11355+02
  7)     -.99000+03   -.46143+00   -.89521+00   -.24435+01    .00000      -.29779+01
 13)     -.99000+03   -.20769+02   -.25641+00   -.53846+01


ITER =    3     OBJ =     .13702-01

DECISION VARIABLES (X-VECTOR)
  1)      .43115+00    .17351+01

CONSTRAINT VALUES (G-VECTOR)
  1)     -.35700+01   -.10191+02   -.26510+01   -.27281-02   -.10669+02   -.10669+02
  7)     -.99000+03   -.99854+00   -.88473+00   -.30086+01   -.24415+00   -.23822+01
 13)     -.99000+03   -.20769+02   -.25641+00   -.53846+01


ITER =    4     OBJ =     .13698-01

DECISION VARIABLES (X-VECTOR)
  1)      .42700+00    .17470+01

CONSTRAINT VALUES (G-VECTOR)
  1)     -.35700+01   -.10183+02   -.26708+01   -.18014-01   -.10769+02   -.10769+02
  7)     -.99000+03   -.85205+00   -.88118+00   -.28559+01   -.19372-05   -.24874+01
 13)     -.99000+03   -.20769+02   -.25641+00   -.53846+01
```

```
ITER =    5     OBJ =     .13698-01     NO CHANGE IN OBJ

DECISION VARIABLES (X-VECTOR)
  1)      .42700+00    .17470+01



CONSTRAINT VALUES (G-VECTOR)
  1)     -.35700+01   -.10183+02   -.26708+01   -.18014-01   -.10769+02   -.10769+02
  7)     -.99000+03   -.85205+00   -.88118+00   -.28559+01   -.19372-05   -.24874+01
 13)     -.99000+03   -.20769+02   -.25641+00   -.53846+01


ITER =    6     OBJ =     .13698-01     NO CHANGE IN OBJ

DECISION VARIABLES (X-VECTOR)
  1)      .42700+00    .17470+01

CONSTRAINT VALUES (G-VECTOR)
  1)     -.35700+01   -.10183+02   -.26708+01   -.18014-01   -.10769+02   -.10769+02
  7)     -.99000+03   -.85205+00   -.88118+00   -.28559+01   -.19372-05   -.24874+01
 13)     -.99000+03   -.20769+02   -.25641+00   -.53846+01
```

```
FINAL OPTIMIZATION INFORMATION

 OBJ =     .136982-01

 DECISION VARIABLES (X-VECTOR)
   1)      .42700+00    .17470+01

 CONSTRAINT VALUES (G-VECTOR)
   1)     -.35700+01   -.10183+02   -.26708+01   -.18014-01   -.10769+02   -.10769+02
   7)     -.99000+03   -.85205+00   -.88118+00   -.28559+01   -.19372-05   -.24874+01
  13)     -.99000+03   -.20769+02   -.25641+00   -.53846+01

 THERE ARE    2 ACTIVE CONSTRAINTS
 CONSTRAINT NUMBERS ARE
    4   11

 THERE ARE    0 VIOLATED CONSTRAINTS

 THERE ARE    0 ACTIVE SIDE CONSTRAINTS

 TERMINATION CRITERION
     ABS(OBJ(I)-OBJ(I-1))   LESS THAN DABFUN FOR  3 ITERATIONS

 NUMBER OF ITERATIONS =    6

 OBJECTIVE FUNCTION WAS EVALUATED          26  TIMES

 CONSTRAINT FUNCTIONS WERE EVALUATED       26  TIMES
```

OPTIMIZATION RESULTS

OBJECTIVE FUNCTION
GLOBAL LOCATION 51 FUNCTION VALUE .13698-01

DESIGN VARIABLES

ID	D. V. NO.	GLOBAL VAR. NO.	LOWER BOUND	VALUE	UPPER BOUND
1	1	21	.00000	.42700+00	.10000+01
2	2	25	.00000	.17470+01	.20000+01
3	1	22	.00000	.42700+00	.10000+01

DESIGN CONSTRAINTS

ID	GLOBAL VAR. NO.	LOWER BOUND	VALUE	UPPER BOUND
1	1	.00000	.35700+00	.11000+16
2	2	.00000	.10183+01	.11000+16
3	3	.00000	.26708+00	.11000+16
4	4	.00000	.18014-02	.11000+16
5	5	.00000	.10769+01	.11000+16
6	6	.00000	.10769+01	.11000+16
7	7	.00000	.99000+02	.11000+16
8	8	.00000	.85205-01	.11000+16
9	9	.00000	.88118-01	.11000+16
10	10	.00000	.28559+00	.11000+16
11	11	.00000	.00000	.11000+16
12	12	.10000+00	.34874+00	.11000+16
13	13	.00000	.99000+02	.11000+16
14	14	.00000	.20769+01	.11000+16
15	15	.00000	.25641-01	.11000+16
16	16	.00000	.53846+00	.11000+16

WEIGHT/(UNIT PLAN AREA) = .01370

* * * MARGIN OF SAFETY SUMMARY * * *

MODE	DESCRIPTION	LOADING CASE NO. 1	2	3	4	5
1	SHEAR STIFFNESS	.357	.357			
2	LONGIT. STIFFNESS	1.018	1.018			
3	SKIN STRENGTH	.267	2.263			
4	STRAIN LIMITATION	.002	.327			
5	L. FLANGE STRENGTH	1.077	1.807			
6	R. FLANGE STRENGTH	1.077	1.807			
7	WEB STRENGTH	99.000	99.000			
8	STIF. LOCAL BUCKLING	.085	1.059			
9	SKIN LOCAL BUCKLING	99.000	.088			
10	ROLLING BUCKLING	.286	1.580			
11	TORS./FLEX. BUCKLING	.000	2.147			
12	EULER BUCKLING	.349	1.213			
13	SKIN/STIF. INTERFACE	99.000	99.000			
14	SKIN LAYUP (LONGIT.)	2.077	2.077			
15	SKIN LAYUP (INTERM.)	.026	.026			
16	SKIN LAYUP (TRANSV.)	.538	.538			

MINIMUM MARGIN OF SAFETY = .000

CRITICAL MODE = 11
LOADING CASE = 1

STIFFENER LOAD = -24426. TORSIONAL/FLEX. BUCKLING LOAD = -24426.

PROGRAM CALLS TO ANALIZ

ICALC	CALLS
1	1
2	27
3	2

EXAMPLE 4 - FINAL ANALYSIS

The final design produced in the previous example is analyzed with IWRITE = 1 to obtain a complete listing of the analysis data. In this case a skin/stiffener interface stress analysis is performed. The interface stresses are shown in the output for Mode 13, pass 1 (positive eccentricity), load case 1. The critical stress is the longitudinal/normal shear stress at the flange edge and the buckling wave nodal line. The allowable shear stress used in this example yields a large negative margin of safety for this mode. Assuming the interface allowable stresses are correct and the point-stress failure criterion is appropriate, positive attachment of the stiffener would be required in order to achieve the computed postbuckling behavior of the skin.

```
                    INPUT DATA:   PAGE   1
 LINE
NUMBER  ***************************** DATA ***********************************

  1            *****     EXAMPLE 4 -- I-SECTION FINAL ANALYSIS     *****
   C.....RECORD S2 - PROGRAM CONTROL PARAMETERS: NCALC,NDV,IPNPUT
  2    1  0  2
   C.....RECORD S12 - END OF SIZING DATA
  3    SIZ
   C.....RECORD A1 - ANALYSIS CONTROL DATA: IWRITE,NLOADS,NMAT
  4    1  2  3
   C.....RECORD A2 - GEOMETRY: W(1),W(2),W(3),W(4),H,BS,XL
  5    .427  .427  .75  .75  1.747  6.  20.
   C.....REPEAT RECORDS A3 AND A4 FOR EACH NONZERO PLATE ELEMENT
   C.....RECORD A3 - PLATE ELEMENT SYMMETRY AND REPEAT INDICATORS:  NSYM,NLS,NREP
  6    1  5                  $ W(1)
   C.....RECORD A4 - PLATE ELEMENT SUBSET IDENTIFICATION NUMBERS: LS
  7    3  1  2  3  6
  8    1  5                  $ W(2)
  9    3  1  2  3  6
 10    0  5                  $ W(3)
 11    5  1  6  -1  3
 12    0  5                  $ W(4)
 13    5  1  6  -1  3
 14    1  3                  $ H, WEB
 15    3  1  6
 16    1  9                 $ BS, SKIN
 17    8  -8  9  10  10  9  7  9  10
   C.....RECORD A5 - NUMBER OF LAMINATE SUBSETS TO BE DEFINED: NSUBS
 18    10
   C.....REPEAT RECORDS A6,A7 AND A8 NSUBS TIMES
   C.....RECORD A6 - NUMBER OF PLIES: NPLY
 19    2                     $ SUBSET NO. 1
   C.....RECORD A7 - PLY THICKNESS: TPLY
 20    .005
   C.....RECORD A8 - PLY ORIENTATIONS: THETA
 21    45.  -45.
 22    1                     $ SUBSET NO. 2
 23    .030
 24    0.
 25    1                     $ SUBSET NO. 3
 26    .005
 27    90.
 28    1                     $ SUBSET NO. 4
 29    .0025
 30    90.
 31    1                     $ SUBSET NO. 5
 32    .005
 33    0.
 34    1                     $ SUBSET NO. 6
 35    .015
 36    0.
```

INPUT DATA: PAGE 2

```
LINE
NUMBER  ************************** DATA ***********************************

 37    2                    $ SUBSET NO. 7
 38    .005
 39    45.  -45.
 40    2                    $ SUBSET NO. 8
 41    .005
 42    45.  -45.
 43    1                    $ SUBSET NO. 9
 44    .020
 45    0.
 46    1                    $ SUBSET NO. 10
 47    .0025
 48    90.
   C.....REPEAT RECORDS A9,A10 AND A11 NMAT TIMES
   C.....RECORD A9: MATERIAL CODE NUMBER: MAT
 49    2                    $ MATERIAL NO. 1 (ORTHOTROPIC)
   C.....RECORD A10 - MATERIAL PROPERTIES: E'S,G,NU,ALPHA'S,RHO
 50    .185E8  .164E7  .870E6  .300  .240E-6  .162E-4  .057
   C.....RECORD A11 - MATERIAL ALLOWABLES: STRAINS:  0T,0C,90T,90C,S
   C                                       STRESSES: 0T,0C,90T,90C,S
 51    .653E-2  .670E-2  .500E-2  .100E-1  .133-1,
 52    .133E6  .124E6  .840E4  .164E5  .116E6
 53    2                    $ MATERIAL NO. 2 (ORTHOROPIC)
 54    .185E8  .164E7  .870E6  .300  .240E-6  .162E-4  .057
 55    .980E-2  .1005E-1  .750E-2  .150E-1  .200-1,
 56    .200E6  .186E6  .126E5  .246E5  .174E6
 57    1                    $ MATERIAL NO. 3 (ISOTROPIC)
 58    .245E6  .943E5  .300  .144E-4  .050
 59    .0257  .122  .0954  6300.  30000.  9000.
   C.....REPEAT RECORDS A12,A13,A14,A15 AND A16 NLOADS TIMES
   C.....RECORD A12 - ADDITIONAL ANALYSIS CONTROL DATA: MOPT,ICLAMP,NOBUCK,ISEP,NPX
 60    1  0  0  1  2  21    $ LOAD CASE NO. 1 (ULTIMATE LOAD)
   C.....RECORD A13 - LOADS AND ECCENTRICITIES: XN1,XN2,XN3,PRESS,DELT,DEL,DELNX
 61    -9000.  0.  900.  0.  0.  .001  0.
   C.....RECORD A14 - MATERIAL SPECIFICATION: MATNO
 62    2  2  2  2  3  2  2  2  2  2
   C.....RECORD A15 - STIFFNESS REQUIREMENTS: GTREQ,ETREQ
 63    .3E6  1.5E6
   C.....RECORD A16 - DESIGN STRAIN LIMITATIONS: 0T,0C,90T,90C
 64    .0045  .0040  .0045  .0040
 65    1  0  1              $ LOAD CASE NO. 2 (LIMIT LOAD)
 66    -6000.  0.  600.  0.  0.  .001  0.
 67    1  1  1  1  3  1  1  1  1  1
 68    .3E6  1.5E6
 69    .0030  .0027  .0030  .0027
   C.....SKIN LAYUP DESIGN CONSTRAINTS: THETAA,SKRAT(1),SKRAT(2),SKRAT(3)
 70    0.0  0.2  0.3  0.05
   C.....RECORD A18 - END OF DATA
 71    END
```

Output for Example 4.

```
* * * * * * * * * * * * * * * * * * * * * * * * * * * * * * * * * * * * * * * *

        *****    EXAMPLE 4 — I-SECTION FINAL ANALYSIS    *****

* * * * * * * * * * * * * * * * * * * * * * * * * * * * * * * * * * * * * * * *

                    * * * * * * * * * * * *

                    * * * P O S T O P * * *

                    * * * * * * * * * * * *

        * * * * POSTBUCKLED OPEN-STIFFENED OPTIMUM PANELS * * * *

        ANALYSIS AND SIZING OF COMPOSITE PANELS WITH OPEN-SECTION
        STIFFENERS SUBJECTED TO GENERAL INPLANE LOADS AND UNIFORM
        PRESSURE. PANELS MAY BE LOADED IN THE POSTBUCKLING RANGE.

        * * * * LOCKHEED GEORGIA COMPANY * * * JUNE  1983 * * * *


IWRITE = 1     NLOADS = 2    NMAT = 3    NSTMX = 2    NITER =12    NMAX = 0


FLANGE WIDTHS:      W1 =  .427     W2 =  .427     W3 =  .750     W4 =  .750

STIFFENER HEIGHT = 1.747   STIFFENER SPACING = 6.000   PANEL LENGTH = 20.00


ELEMENT LAMINATE CONFIGURATIONS:

FLANGE 1    NSYM= 1   NLSS= 5   NREP= 0   SUBSETS:  3  1  2  3  6
FLANGE 2    NSYM= 1   NLSS= 5   NREP= 0   SUBSETS:  3  1  2  3  6
FLANGE 3    NSYM= 0   NLSS= 5   NREP= 0   SUBSETS:  5  1  6 -1  3
FLANGE 4    NSYM= 0   NLSS= 5   NREP= 0   SUBSETS:  5  1  6 -1  3
WEB         NSYM= 1   NLSS= 3   NREP= 0   SUBSETS:  3  1  6
SKIN        NSYM= 1   NLSS= 9   NREP= 0   SUBSETS:  8 -8  9 10 10  9  7  9
                                                   10


THE FOLLOWING LAMINATE SUBSETS ARE DEFINED:

 1    2 PLIES   PLY THICKNESS=  .00500    ORIENTATIONS:  45 -45
 2    1 PLY     PLY THICKNESS=  .03000    ORIENTATION :   0
 3    1 PLY     PLY THICKNESS=  .00500    ORIENTATION :  90
 4    1 PLY     PLY THICKNESS=  .00250    ORIENTATION :  90
 5    1 PLY     PLY THICKNESS=  .00500    ORIENTATION :   0
 6    1 PLY     PLY THICKNESS=  .01500    ORIENTATION :   0
 7    2 PLIES   PLY THICKNESS=  .00500    ORIENTATIONS:  45 -45
 8    2 PLIES   PLY THICKNESS=  .00500    ORIENTATIONS:  45 -45
 9    1 PLY     PLY THICKNESS=  .02000    ORIENTATION :   0
10    1 PLY     PLY THICKNESS=  .00250    ORIENTATION :  90
```

THE FOLLOWING MATERIALS ARE SPECIFIED:

MATERIAL NO. 1 CODE = 2 RHO = .570-01

E11= .185+08	G12= .870+06	NU12= .300+00	ALPHA1= .240-06
E22= .164+07	G13= .870+06	NU13= .300+00	ALPHA2= .162-04
E33= .164+07	G23= .870+06	NU23= .300+00	ALPHA3= .162-04

ALLOWABLE STRAIN AND STRESS VALUES:

	0-DEGREE TENSION	0-DEGREE COMPRESS.	90-DEGREE TENSION	90-DEGREE COMPRESS.	SHEAR
STRAIN	.653-02	.670-02	.500-02	.100-01	.133-01
STRESS	.133+06	.124+06	.840+04	.164+05	.116+06

MATERIAL NO. 2 CODE = 2 RHO = .570-01

E11= .185+08	G12= .870+06	NU12= .300+00	ALPHA1= .240-06
E22= .164+07	G13= .870+06	NU13= .300+00	ALPHA2= .162-04
E33= .164+07	G23= .870+06	NU23= .300+00	ALPHA3= .162-04

ALLOWABLE STRAIN AND STRESS VALUES:

	0-DEGREE TENSION	0-DEGREE COMPRESS.	90-DEGREE TENSION	90-DEGREE COMPRESS.	SHEAR
STRAIN	.980-02	.101-01	.750-02	.150-01	.200-01
STRESS	.200+06	.186+06	.126+05	.246+05	.174+06

MATERIAL NO. 3 CODE = 1 RHO = .500-01

E11= .245+06	G12= .943+05	NU12= .300+00	ALPHA1= .144-04
E22= .245+06	G13= .943+05	NU13= .300+00	ALPHA2= .144-04
E33= .245+06	G23= .943+05	NU23= .300+00	ALPHA3= .144-04

ALLOWABLE STRAIN AND STRESS VALUES:

	0-DEGREE TENSION	0-DEGREE COMPRESS.	90-DEGREE TENSION	90-DEGREE COMPRESS.	SHEAR
STRAIN	.257-01	.122+00	.257-01	.122+00	.954-01
STRESS	.630+04	.300+05	.630+04	.300+05	.900+04

```
* * * * * * * * * * * * * * * * *
* * * LOAD CASE NUMBER  1 * * *
* * * * * * * * * * * * * * * * *


MOPT = 1     ICLAMP = 0     NOBUCK = 0
ISEP = 1     NPX  = 2       NPY    =21     NSEP   =10


APPLIED LOADS (FORCE/UNIT WIDTH):  NX = -9000.   NY =     0.   NXY =   900.

PRESSURE =    .00                  TEMPERATURE DIFF. =    0.

INITIAL ECCEN./LENGTH = .0010      AXIAL LOAD ECCEN. = .0000



SUBSET MATERIAL SPECIFICATION:

SUBSET  1     MATERIAL NO.  2
SUBSET  2     MATERIAL NO.  2
SUBSET  3     MATERIAL NO.  2
SUBSET  4     MATERIAL NO.  2
SUBSET  5     MATERIAL NO.  3
SUBSET  6     MATERIAL NO.  2
SUBSET  7     MATERIAL NO.  2
SUBSET  8     MATERIAL NO.  2
SUBSET  9     MATERIAL NO.  2
SUBSET 10     MATERIAL NO.  2


REQUIRED SHEAR STIFFNESS, GTREQ =  .3000+06
REQUIRED AXIAL STIFFNESS, ETREQ =  .1500+07

STRAIN LIMITATIONS IN SKIN  (MEMBRANE ONLY)

0-DEG. TENSION    0-DEG. COMPRESS.    90-DEG. TENSION    90-DEG. COMPRESS.
    .0045             .0040               .0045              .0040
```

```
* * * * * * * * * * * * * * * *
* * * LOAD CASE NUMBER  2 * * *
* * * * * * * * * * * * * * * *


MOPT = 1     ICLAMP = 0     NOBUCK = 1
ISEP = 0     NPX  = 0       NPY    = 0     NSEP   = 0


APPLIED LOADS (FORCE/UNIT WIDTH):  NX = -6000.   NY =     0.   NXY =   600.

PRESSURE =    .00                  TEMPERATURE DIFF. =    0.

INITIAL ECCEN./LENGTH = .0010      AXIAL LOAD ECCEN. = .0000



SUBSET MATERIAL SPECIFICATION:

SUBSET  1     MATERIAL NO.  1
SUBSET  2     MATERIAL NO.  1
SUBSET  3     MATERIAL NO.  1
SUBSET  4     MATERIAL NO.  1
SUBSET  5     MATERIAL NO.  3
SUBSET  6     MATERIAL NO.  1
SUBSET  7     MATERIAL NO.  1
SUBSET  8     MATERIAL NO.  1
SUBSET  9     MATERIAL NO.  1
SUBSET 10     MATERIAL NO.  1


REQUIRED SHEAR STIFFNESS, GTREQ =  .3000+06
REQUIRED AXIAL STIFFNESS, ETREQ =  .1500+07

STRAIN LIMITATIONS IN SKIN  (MEMBRANE ONLY)

0-DEG. TENSION    0-DEG. COMPRESS.    90-DEG. TENSION    90-DEG. COMPRESS.
    .0030             .0027               .0030              .0027



SKIN LAYUP DESIGN CONSTRAINTS -- THETAA =   .0

  SKRAT(1)     SKRAT(2)     SKRAT(3)
    .200         .300         .050
```

```
* * * * * * * * * * * * * * * * *
* * * LOAD CASE NUMBER  1 * * *
* * * * * * * * * * * * * * * * *
```

STIFFENER PROPERTIES

EA = .3147+07 EIYY = .1464+07 EIYZ = .0000 EIZZ = .1985+06
GJ = .1774+04 YST = .000 ZST = 1.201

SKIN STIFFNESSES PER UNIT WIDTH

A-MATRIX			D-MATRIX		
.2634+07	.3342+06	.0000	.6987+04	.1584+04	.1593+02
.3342+06	.8497+06	.0000	.1584+04	.3002+04	.1593+02
.0000	.0000	.4071+06	.1593+02	.1593+02	.1815+04

* * * MODE = 1 SHEAR STIFFNESS MARGIN OF SAFETY = .357

UNBUCKLED GT = .4071+06 REQUIRED GT = .3000+06

* * * MODE = 2 LONGIT. STIFFNESS MARGIN OF SAFETY = 1.018

UNBUCKLED ET = .3027+07 REQUIRED ET = .1500+07

UNBUCKLED SKIN/STIFFENER PROPERTIES

EAS = .1816+08 EIS = .5256+07 ZBR = .208 EULER = -79657.

* * * PASS 1: BOW ECCENTRICITY = .0200 * * *

SKIN/STIFFENER BENDING MOMENTS

PRESSURE: XMP = .0000 BOW ECCEN.: XME = .4177+04
LOAD ECCEN.: XMN = .0000 TOTAL: XMOM = .4177+04

POSTBUCKLED SKIN PARAMETERS

XNSTAR= 5370.65 EPSTAR= .002146

ALPHA	D	M	F/EPSTAR	XNX	EPS1/ EPSTAR	EPS2/ EPSTAR	EPS12/ EPSTAR
1.00	.810	.128	1.177	-1.380	-1.856	-.054	1.153

NORMALIZED TANGENT STIFFNESS MATRIX

A11	A12	A22	A66
.4990	-.1191	.2231	.1456

BUCKLED SKIN/STIFFENER PROPERTIES

EAS = .1431+08 EIS = .5044+07 ZBR = .264
EAT = .9641+07 EIT = .4560+07 EULER = -72831.

* * * MODES = 3 AND 4 SKIN IS BUCKLED

SKIN LOAD XNSK = -7410.28 XNCR = -5467.81 EPS1CR = -.002185

LOCATION 1

TOTAL STRAINS IN DIRECTION OF LAMINA PRINCIPAL AXES

PLY NO.	ORIEN-TATION	* * * STRAINS * * * EPS1	EPS2	EPS12	STRAIN RATIOS		
1	45.	.3144-02	-.8066-02	.3221-02	.321	.538	.161
2	-45.	-.7797-02	.2939-02	-.3277-02	.776	.392	.164
3	-45.	-.7528-02	.2735-02	-.3334-02	.749	.365	.167
4	45.	.2531-02	-.7258-02	.3390-02	.258	.484	.170
5	0.	-.4049-02	-.5167-03	.8605-02	.403	.034	.430
6	90.	-.3800-03	-.4039-02	-.7539-02	.038	.269	.377
7	90.	-.3496-03	-.4037-02	-.7303-02	.035	.269	.365
8	0.	-.4028-02	-.2128-03	.6237-02	.401	.014	.312
9	45.	.4871-03	-.4566-02	.3957-02	.050	.304	.198
10	-45.	-.4296-02	.2827-03	-.4013-02	.427	.038	.201
11	0.	-.4003-02	.1518-03	.3395-02	.398	.020	.170
12	90.	.2886-03	-.3994-02	-.2329-02	.029	.266	.116
13	90.	.3190-03	-.3992-02	-.2092-02	.033	.266	.105
14	0.	-.3982-02	.4557-03	.1027-02	.396	.061	.051
15	-45.	-.1603-02	-.1761-02	-.4580-02	.160	.117	.229
16	45.	-.1965-02	-.1334-02	.4636-02	.196	.089	.232
17	0.	-.3958-02	.8204-03	-.1815-02	.394	.109	.091
18	90.	.9571-03	-.3948-02	.2881-02	.098	.263	.144
19	90.	.9875-03	-.3946-02	.3118-02	.101	.263	.156
20	0.	-.3937-02	.1124-02	-.4184-02	.392	.150	.209
21	45.	-.4009-02	.1359-02	.5203-02	.399	.181	.260
22	-45.	.1628-02	-.4213-02	-.5259-02	.166	.281	.263
23	-45.	.1897-02	-.4418-02	-.5316-02	.194	.295	.266
24	45.	-.4622-02	.2166-02	.5373-02	.460	.289	.269

MEMBRANE STRAINS IN DIRECTION OF LAMINA PRINCIPAL AXES

PLY NO.	ORIEN-TATION	* * * STRAINS * * * EPS1	EPS2	EPS12	STRAIN RATIOS		
1	45.	-.7392-03	-.2950-02	.4297-02	.185	.737	.215
2	-45.	-.2950-02	-.7392-03	-.4297-02	.737	.185	.215
3	-45.	-.2950-02	-.7392-03	-.4297-02	.737	.185	.215
4	45.	-.7392-03	-.2950-02	.4297-02	.185	.737	.215
5	0.	-.3993-02	.3038-03	.2211-02	.998	.068	.111
6	90.	.3038-03	-.3993-02	-.2211-02	.068	.998	.111
7	90.	.3038-03	-.3993-02	-.2211-02	.068	.998	.111
8	0.	-.3993-02	.3038-03	.2211-02	.998	.068	.111
9	45.	-.7392-03	-.2950-02	.4297-02	.185	.737	.215
10	-45.	-.2950-02	-.7392-03	-.4297-02	.737	.185	.215
11	0.	-.3993-02	.3038-03	.2211-02	.998	.068	.111
12	90.	.3038-03	-.3993-02	-.2211-02	.068	.998	.111

LOCATION 2

TOTAL STRAINS IN DIRECTION OF LAMINA PRINCIPAL AXES

PLY NO.	ORIEN-TATION	* * * STRAINS * * * EPS1	EPS2	EPS12	STRAIN RATIOS		
1	45.	.4844-03	-.1726-02	.6901-02	.049	.115	.345
2	-45.	-.1724-02	.4864-03	-.6897-02	.172	.065	.345
3	-45.	-.1722-02	.4885-03	-.6893-02	.171	.065	.345
4	45.	.4906-03	-.1720-02	.6889-02	.050	.115	.344
5	0.	-.4049-02	.2829-02	.2211-02	.403	.377	.111
6	90.	.2829-02	-.4039-02	-.2211-02	.289	.269	.111
7	90.	.2829-02	-.4037-02	-.2211-02	.289	.269	.111
8	0.	-.4028-02	.2829-02	.2211-02	.401	.377	.111
9	45.	.5113-03	-.1699-02	.6847-02	.052	.113	.342
10	-45.	-.1697-02	.5133-03	-.6843-02	.169	.068	.342
11	0.	-.4003-02	.2829-02	.2211-02	.398	.377	.111
12	90.	.2829-02	-.3994-02	-.2211-02	.289	.266	.111
13	90.	.2829-02	-.3992-02	-.2211-02	.289	.266	.111
14	0.	-.3982-02	.2829-02	.2211-02	.396	.377	.111
15	-45.	-.1677-02	.5340-03	-.6802-02	.167	.071	.340
16	45.	.5361-03	-.1675-02	.6797-02	.055	.112	.340
17	0.	-.3958-02	.2829-02	.2211-02	.394	.377	.111
18	90.	.2829-02	-.3948-02	-.2211-02	.289	.263	.111
19	90.	.2829-02	-.3946-02	-.2211-02	.289	.263	.111
20	0.	-.3937-02	.2829-02	.2211-02	.392	.377	.111
21	45.	.5568-03	-.1654-02	.6756-02	.057	.110	.338
22	-45.	-.1652-02	.5589-03	-.6752-02	.164	.075	.338
23	-45.	-.1650-02	.5610-03	-.6748-02	.164	.075	.337
24	45.	.5630-03	-.1648-02	.6744-02	.057	.110	.337

MEMBRANE STRAINS IN DIRECTION OF LAMINA PRINCIPAL AXES

PLY NO.	ORIEN-TATION	* * * STRAINS * * * EPS1	EPS2	EPS12	STRAIN RATIOS		
1	45.	.5237-03	-.1687-02	.6822-02	.116	.422	.341
2	-45.	-.1687-02	.5237-03	-.6822-02	.422	.116	.341
3	-45.	-.1687-02	.5237-03	-.6822-02	.422	.116	.341
4	45.	.5237-03	-.1687-02	.6822-02	.116	.422	.341
5	0.	-.3993-02	.2829-02	.2211-02	.998	.629	.111
6	90.	.2829-02	-.3993-02	-.2211-02	.629	.998	.111
7	90.	.2829-02	-.3993-02	-.2211-02	.629	.998	.111
8	0.	-.3993-02	.2829-02	.2211-02	.998	.629	.111
9	45.	.5237-03	-.1687-02	.6822-02	.116	.422	.341
10	-45.	-.1687-02	.5237-03	-.6822-02	.422	.116	.341
11	0.	-.3993-02	.2829-02	.2211-02	.998	.629	.111
12	90.	.2829-02	-.3993-02	-.2211-02	.629	.998	.111

LOCATION 3

TOTAL STRAINS IN DIRECTION OF LAMINA PRINCIPAL AXES

PLY NO.	ORIEN-TATION	* * * STRAINS * * * EPS1	EPS2	EPS12	STRAIN RATIOS		
1	45.	.4736-03	-.1737-02	.2788-02	.048	.116	.139
2	-45.	-.1735-02	.4756-03	-.2784-02	.173	.063	.139
3	-45.	-.1733-02	.4777-03	-.2779-02	.172	.064	.139
4	45.	.4798-03	-.1731-02	.2775-02	.049	.115	.139
5	0.	-.2003-02	.7621-03	.2211-02	.199	.102	.111
6	90.	.7621-03	-.1994-02	-.2211-02	.078	.133	.111
7	90.	.7621-03	-.1992-02	-.2211-02	.078	.133	.111
8	0.	-.1982-02	.7621-03	.2211-02	.197	.102	.111
9	45.	.5005-03	-.1710-02	.2734-02	.051	.114	.137
10	-45.	-.1708-02	.5025-03	-.2730-02	.170	.067	.136
11	0.	-.1957-02	.7621-03	.2211-02	.195	.102	.111
12	90.	.7621-03	-.1948-02	-.2211-02	.078	.130	.111
13	90.	.7621-03	-.1946-02	-.2211-02	.078	.130	.111
14	0.	-.1937-02	.7621-03	.2211-02	.193	.102	.111
15	-45.	-.1688-02	.5233-03	-.2688-02	.168	.070	.134
16	45.	.5253-03	-.1685-02	.2684-02	.054	.112	.134
17	0.	-.1912-02	.7621-03	.2211-02	.190	.102	.111
18	90.	.7621-03	-.1903-02	-.2211-02	.078	.127	.111
19	90.	.7621-03	-.1900-02	-.2211-02	.078	.127	.111
20	0.	-.1891-02	.7621-03	.2211-02	.188	.102	.111
21	45.	.5460-03	-.1665-02	.2643-02	.056	.111	.132
22	-45.	-.1663-02	.5481-03	-.2639-02	.165	.073	.132
23	-45.	-.1661-02	.5502-03	-.2635-02	.165	.073	.132
24	45.	.5522-03	-.1659-02	.2630-02	.056	.111	.132

MEMBRANE STRAINS IN DIRECTION OF LAMINA PRINCIPAL AXES

PLY NO.	ORIEN-TATION	* * * STRAINS * * * EPS1	EPS2	EPS12	STRAIN RATIOS		
1	45.	.5129-03	-.1698-02	.2709-02	.114	.424	.135
2	-45.	-.1698-02	.5129-03	-.2709-02	.424	.114	.135
3	-45.	-.1698-02	.5129-03	-.2709-02	.424	.114	.135
4	45.	.5129-03	-.1698-02	.2709-02	.114	.424	.135
5	0.	-.1947-02	.7621-03	.2211-02	.487	.169	.111
6	90.	.7621-03	-.1947-02	-.2211-02	.169	.487	.111
7	90.	.7621-03	-.1947-02	-.2211-02	.169	.487	.111
8	0.	-.1947-02	.7621-03	.2211-02	.487	.169	.111
9	45.	.5129-03	-.1698-02	.2709-02	.114	.424	.135
10	-45.	-.1698-02	.5129-03	-.2709-02	.424	.114	.135
11	0.	-.1947-02	.7621-03	.2211-02	.487	.169	.111
12	90.	.7621-03	-.1947-02	-.2211-02	.169	.487	.111

LOCATION 4

TOTAL STRAINS IN DIRECTION OF LAMINA PRINCIPAL AXES

PLY NO.	ORIEN-TATION	* * * STRAINS * * * EPS1	EPS2	EPS12	STRAIN RATIOS		
1	45.	-.1065-02	-.4315-02	.6771-02	.106	.288	.339
2	-45.	-.4177-02	-.9820-03	-.6557-02	.416	.065	.328
3	-45.	-.4040-02	-.8989-03	-.6343-02	.402	.060	.317
4	45.	-.8159-03	-.3902-02	.6130-02	.081	.260	.306
5	0.	-.4880-02	.7147-03	.2949-02	.486	.095	.147
6	90.	.7226-03	-.4391-02	-.2826-02	.074	.293	.141
7	90.	.7244-03	-.4283-02	-.2799-02	.074	.286	.140
8	0.	-.3794-02	.7322-03	.2676-02	.378	.098	.134
9	45.	.1461-04	-.2524-02	.3992-02	.001	.168	.200
10	-45.	-.2387-02	.9766-04	-.3778-02	.237	.013	.189
11	0.	-.2490-02	.7533-03	.2347-02	.248	.100	.117
12	90.	.7612-03	-.2001-02	-.2224-02	.078	.133	.111
13	90.	.7630-03	-.1893-02	-.2197-02	.078	.126	.110
14	0.	-.1404-02	.7708-03	.2074-02	.140	.103	.104
15	-45.	-.1009-02	.9281-03	-.1640-02	.100	.124	.082
16	45.	.1011-02	-.8714-03	.1426-02	.103	.058	.071
17	0.	-.1001-03	.7919-03	.1746-02	.010	.106	.087
18	90.	.7998-03	.3888-03	-.1623-02	.082	.052	.081
19	90.	.8016-03	.4974-03	-.1595-02	.082	.066	.080
20	0.	.9863-03	.8094-03	.1472-02	.101	.108	.074
21	45.	.1842-02	.5061-03	-.7113-03	.188	.067	.036
22	-45.	.6438-03	.1925-02	.9251-03	.066	.257	.046
23	-45.	.7816-03	.2008-02	.1139-02	.080	.268	.057
24	45.	.2091-02	.9193-03	-.1353-02	.213	.123	.068

* * * MODE = 3 SKIN STRENGTH MARGIN OF SAFETY = .267

PLY NO. 2 IS CRITICAL AT LOCATION NO. 1 ORIENTATION = -45.

STRAINS ARE: EPS1 = -.007932 EPS2 = .003042 EPS12 = -.003249

ALLOW. STRAINS ARE: EPS1 = .009800 EPS2 = .007500 EPS12 = .020000
EPS1 = -.010050 EPS2 = -.015000

* * * MODE = 4 STRAIN LIMITATION MARGIN OF SAFETY = .002

PLY NO. 12 IS CRITICAL AT LOCATION NO. 2 ORIENTATION = 90.

STRAINS ARE: EPS1 = .002829 EPS2 = -.003993 EPS12 = -.002211

ALLOW. STRAINS ARE: EPS1 = .004500 EPS2 = .004500 EPS12 = .020000
EPS1 = -.004000 EPS2 = -.004000

* * * MODE = 5

TOTAL STRAINS IN DIRECTION OF LAMINA PRINCIPAL AXES

PLY NO.	ORIEN-TATION	* * * STRAINS * * * EPS1	EPS2	EPS12	STRAIN RATIOS		
1	90.	.5604-03	-.2571-02	.3795-09	.057	.171	.000
2	45.	-.1003-02	-.1003-02	.3127-02	.100	.067	.156
3	-45.	-.1001-02	-.1001-02	-.3123-02	.100	.067	.156
4	0.	-.2548-02	.5604-03	.0000	.254	.075	.000
5	90.	.5604-03	-.2534-02	.3750-09	.057	.169	.000
6	0.	-.2525-02	.5604-03	.0000	.251	.075	.000
7	0.	-.2513-02	.5604-03	.0000	.250	.075	.000
8	90.	.5604-03	-.2505-02	.3715-09	.057	.167	.000
9	0.	-.2490-02	.5604-03	.0000	.248	.075	.000
10	-45.	-.9577-03	-.9577-03	-.3036-02	.095	.064	.152
11	45.	-.9556-03	-.9556-03	.3032-02	.095	.064	.152
12	90.	.5604-03	-.2467-02	.3670-09	.057	.164	.000

* * * MODE = 5 L. FLANGE STRENGTH MARGIN OF SAFETY = 2.925

PLY NO. 4 IS CRITICAL ORIENTATION = 0.

STRAINS ARE: EPS1 = -.002561 EPS2 = .000560 EPS12 = .000000

ALLOW. STRAINS ARE: EPS1 = .009800 EPS2 = .007500 EPS12 = .020000
EPS1 = -.010050 EPS2 = -.015000

* * * MODE = 6

TOTAL STRAINS IN DIRECTION OF LAMINA PRINCIPAL AXES

PLY NO.	ORIEN-TATION	* * * STRAINS * * * EPS1	EPS2	EPS12	STRAIN RATIOS		
1	90.	.5604-03	-.2571-02	.3795-09	.057	.171	.000
2	45.	-.1003-02	-.1003-02	.3127-02	.100	.067	.156
3	-45.	-.1001-02	-.1001-02	-.3123-02	.100	.067	.156
4	0.	-.2548-02	.5604-03	.0000	.254	.075	.000
5	90.	.5604-03	-.2534-02	.3750-09	.057	.169	.000
6	0.	-.2525-02	.5604-03	.0000	.251	.075	.000
7	0.	-.2513-02	.5604-03	.0000	.250	.075	.000
8	90.	.5604-03	-.2505-02	.3715-09	.057	.167	.000
9	0.	-.2490-02	.5604-03	.0000	.248	.075	.000
10	-45.	-.9577-03	-.9577-03	-.3036-02	.095	.064	.152
11	45.	-.9556-03	-.9556-03	.3032-02	.095	.064	.152
12	90.	.5604-03	-.2467-02	.3670-09	.057	.164	.000

* * * MODE = 6 R. FLANGE STRENGTH MARGIN OF SAFETY = 2.925

PLY NO. 4 IS CRITICAL ORIENTATION = 0.

STRAINS ARE: EPS1 = -.002561 EPS2 = .000560 EPS12 = .000000

ALLOW. STRAINS ARE: EPS1 = .009800 EPS2 = .007500 EPS12 = .020000
EPS1 = -.010050 EPS2 = -.015000

* * * MODE = 8 STIF. LOCAL BUCKLING MARGIN OF SAFETY = .381

ELEMENT LOADS: NX(1) = -4543. NX(2) = -4543. NX(5) = -2150.

CRITICAL WAVE NUMBER = 18 NMAX = 25

* * * MODE =11 TORS./FLEX. BUCKLING MARGIN OF SAFETY = -.000

STIFFENER LOAD = -24426. TORSIONAL/FLEX. BUCKLING LOAD = -24425.

* * * MODE =12 EULER BUCKLING MARGIN OF SAFETY = .349

EULER LOAD = -.7283+05 APPLIED LOAD = -.5400+05

* * * MODE =13 SKIN/STIF. INTERFACE MARGIN OF SAFETY = -.637

POSTBUCKLING EDGE MOMENT = .947+02 EDGE SHEAR = .191+03
PRESSURE LOAD EDGE MOMENT = .000 EDGE SHEAR = .000

INTERFACE STRESSES SIGX = -.926+03 SIGY = .107+03 TAUXY = .208+03

X = .000	SIGZ	TAUXZ	TAUYZ
Y = .000	.000	.000	.000
Y = .037	.000	.528+01	.000
Y = .075	.000	.208+02	.000
Y = .112	.000	.519+02	.000
Y = .150	.000	.973+02	.000
Y = .187	.000	.151+03	.000
Y = .225	.000	.205+03	.000
Y = .262	.000	.258+03	.000
Y = .300	.000	.314+03	.000
Y = .337	.000	.381+03	.000
Y = .375	.000	.470+03	.000
Y = .412	.000	.593+03	.000
Y = .450	.000	.768+03	.000
Y = .487	.000	.103+04	.000
Y = .525	.000	.145+04	.000
Y = .562	.000	.214+04	.000
Y = .600	.000	.331+04	.000
Y = .637	.000	.530+04	.000
Y = .675	.000	.872+04	.000
Y = .712	.000	.146+05	.000
Y = .750	.000	.248+05	.000

X = 10.000	SIGZ	TAUXZ	TAUYZ
Y = .000	.000	.000	-.298+03
Y = .037	-.348+04	-.152-06	-.199+02
Y = .075	-.524+04	-.599-06	.674+03
Y = .112	-.456+04	-.150-05	.145+04
Y = .150	-.212+04	-.280-05	.195+04
Y = .187	.496+03	-.434-05	.203+04
Y = .225	.181+04	-.590-05	.180+04
Y = .262	.138+04	-.743-05	.153+04
Y = .300	-.179+02	-.904-05	.146+04
Y = .337	-.103+04	-.110-04	.163+04
Y = .375	-.868+03	-.135-04	.185+04
Y = .412	.128+03	-.171-04	.186+04
Y = .450	.827+03	-.221-04	.160+04
Y = .487	.502+03	-.297-04	.124+04
Y = .525	-.352+03	-.417-04	.105+04
Y = .562	-.574+03	-.616-04	.989+03
Y = .600	.344+02	-.954-04	.689+03
Y = .637	.193+03	-.153-03	-.613+02
Y = .675	-.513+03	-.251-03	-.813+03
Y = .712	.266+03	-.421-03	-.132+04
Y = .750	.308+04	-.714-03	-.239+04

INTERFACE STRESSES MAX AT X = .000 Y = .750

* * * PASS 2: BOW ECCENTRICITY = -.0200 * * *

SKIN/STIFFENER BENDING MOMENTS

PRESSURE: XMP = .0000 BOW ECCEN.: XME = -.4177+04
LOAD ECCEN.: XMN = .0000 TOTAL: XMOM = -.4177+04

POSTBUCKLED SKIN PARAMETERS

XNSTAR= 5370.65 EPSTAR= .002146

ALPHA	D	M	F/EPSTAR	XNX	EPS1/ EPSTAR	EPS2/ EPSTAR	EPS12/ EPSTAR
1.00	.810	.128	.747	-1.246	-1.549	.112	1.108

NORMALIZED TANGENT STIFFNESS MATRIX

A11	A12	A22	A66
.4993	-.1192	.2232	.1512

BUCKLED SKIN/STIFFENER PROPERTIES

EAS = .1523+08 EIS = .5105+07 ZBR = .248
EAT = .9641+07 EIT = .4560+07 EULER = -72832.

* * * MODE = 5

TOTAL STRAINS IN DIRECTION OF LAMINA PRINCIPAL AXES

PLY NO.	ORIEN-TATION	* * * STRAINS * * * EPS1	EPS2	EPS12	STRAIN RATIOS		
1	90.	.1067-02	-.4747-02	.7047-09	.109	.316	.000
2	45.	-.1842-02	-.1842-02	.5818-02	.183	.123	.291
3	-45.	-.1844-02	-.1844-02	-.5822-02	.183	.123	.291
4	0.	-.4769-02	.1067-02	.0000	.475	.142	.000
5	90.	.1067-02	-.4784-02	.7091-09	.109	.319	.000
6	0.	-.4792-02	.1067-02	.0000	.477	.142	.000
7	0.	-.4804-02	.1067-02	.0000	.478	.142	.000
8	90.	.1067-02	-.4812-02	.7126-09	.109	.321	.000
9	0.	-.4827-02	.1067-02	.0000	.480	.142	.000
10	-45.	-.1887-02	-.1887-02	-.5908-02	.188	.126	.295
11	45.	-.1889-02	-.1889-02	.5912-02	.188	.126	.296
12	90.	.1067-02	-.4849-02	.7170-09	.109	.323	.000

* * * MODE = 5 L. FLANGE STRENGTH MARGIN OF SAFETY = 1.077

PLY NO. 9 IS CRITICAL ORIENTATION = 0.

STRAINS ARE: EPS1 = -.004839 EPS2 = .001067 EPS12 = .000000

ALLOW. STRAINS ARE: EPS1 = .009800 EPS2 = .007500 EPS12 = .020000
EPS1 = -.010050 EPS2 = -.015000

* * * MODE = 6

TOTAL STRAINS IN DIRECTION OF LAMINA PRINCIPAL AXES

PLY NO.	ORIEN-TATION	* * * STRAINS * * * EPS1	EPS2	EPS12	STRAIN RATIOS		
1	90.	.1067-02	-.4747-02	.7047-09	.109	.316	.000
2	45.	-.1842-02	-.1842-02	.5818-02	.183	.123	.291
3	-45.	-.1844-02	-.1844-02	-.5822-02	.183	.123	.291
4	0.	-.4769-02	.1067-02	.0000	.475	.142	.000
5	90.	.1067-02	-.4784-02	.7091-09	.109	.319	.000
6	0.	-.4792-02	.1067-02	.0000	.477	.142	.000
7	0.	-.4804-02	.1067-02	.0000	.478	.142	.000
8	90.	.1067-02	-.4812-02	.7126-09	.109	.321	.000
9	0.	-.4827-02	.1067-02	.0000	.480	.142	.000
10	-45.	-.1887-02	-.1887-02	-.5908-02	.188	.126	.295
11	45.	-.1889-02	-.1889-02	.5912-02	.188	.126	.296
12	90.	.1067-02	-.4849-02	.7170-09	.109	.323	.000

* * * MODE = 6 R. FLANGE STRENGTH MARGIN OF SAFETY = 1.077

PLY NO. 9 IS CRITICAL ORIENTATION = 0.

STRAINS ARE: EPS1 = -.004839 EPS2 = .001067 EPS12 = .000000

ALLOW. STRAINS ARE: EPS1 = .009800 EPS2 = .007500 EPS12 = .020000
EPS1 = -.010050 EPS2 = -.015000

* * * MODE = 8 STIF. LOCAL BUCKLING MARGIN OF SAFETY = .085

ELEMENT LOADS: NX(1) = -8653. NX(2) = -8653. NX(5) = -2735.

CRITICAL WAVE NUMBER = 18 NMAX = 25

```
* * * MODE =10    ROLLING BUCKLING              MARGIN OF SAFETY =   .286

BUCKLING FACTOR IN ROLLING MODE =  1.286


* * * MODE =11    TORS./FLEX. BUCKLING          MARGIN OF SAFETY =   .112

STIFFENER LOAD =   -26159.       TORSIONAL/FLEX. BUCKLING LOAD =   -29095.


* * * MODE =12    EULER BUCKLING                MARGIN OF SAFETY =   .349

EULER LOAD =  -.7283+05     APPLIED LOAD =  -.5400+05


                * * * * * * * * * * * * * * * *
                * * * LOAD CASE NUMBER  2 * * *
                * * * * * * * * * * * * * * * *


                SIMILAR OUTPUT NOT SHOWN
```

WEIGHT/(UNIT PLAN AREA) = .01370

* * * MARGIN OF SAFETY SUMMARY * * *

MODE	DESCRIPTION	LOADING CASE NO. 1	2	3	4	5
1	SHEAR STIFFNESS	.357	.357			
2	LONGIT. STIFFNESS	1.018	1.018			
3	SKIN STRENGTH	.267	2.263			
4	STRAIN LIMITATION	.002	.327			
5	L. FLANGE STRENGTH	1.077	1.807			
6	R. FLANGE STRENGTH	1.077	1.807			
7	WEB STRENGTH	99.000	99.000			
8	STIF. LOCAL BUCKLING	.085	1.059			
9	SKIN LOCAL BUCKLING	99.000	.088			
10	ROLLING BUCKLING	.286	1.580			
11	TORS./FLEX. BUCKLING	-.000	2.147			
12	EULER BUCKLING	.349	1.213			
13	SKIN/STIF. INTERFACE	-.637	99.000			
14	SKIN LAYUP (LONGIT.)	2.077	2.077			
15	SKIN LAYUP (INTERM.)	.026	.026			
16	SKIN LAYUP (TRANSV.)	.538	.538			

MINIMUM MARGIN OF SAFETY = -.637

CRITICAL MODE = 13
LOADING CASE = 1

INTERFACE STRESSES MAX AT X = .000 Y = .750

PROGRAM CALLS TO ANALIZ

ICALC	CALLS
1	1
2	1
3	1

REFERENCES

1. Dickson, John N. and Sherrill B. Biggers, "POSTOP: Postbuckled Open-STiffener Optimum Panels - Theory and Capability," NASA CR-172259, January 1984

2. Madsen, Leroy E. and Garret N. Vanderplaats, "COPES - A Fortran Control Program for Engineering Synthesis," Report No. NPS69-81-003, Naval Postgraduate School, Monterey, Calif., March 1982.

3. Vanderplaats, Garret N., 'CONMIN - A Fortran Program for CONstrained Function MINimization - User's Manual," NASA TM X-62, 282, 1973.

1. Report No.	2. Government Accession No.	3. Recipient's Catalog No.
NASA CR-172260		

4. Title and Subtitle	5. Report Date
POSTOP: POSTBUCKLED OPEN-STIFFENER OPTIMUM PANELS -- USER'S MANUAL	January 1984
	6. Performing Organization Code
7. Author(s)	8. Performing Organization Report No.
S. B. Biggers and J. N. Dickson	
9. Performing Organization Name and Address	10. Work Unit No.
Lockheed-Georgia Company 86 South Cobb Dr. Marietta, GA 30063	11. Contract or Grant No. NAS1-15949
12. Sponsoring Agency Name and Address	13. Type of Report and Period Covered
National Aeronautics and Space Administration Washington, DC 20546	Contractor Report
	14. Sponsoring Agency Code

15. Supplementary Notes

Langley Technical Monitor: Dr. James H. Starnes

16. Abstract

The computer program POSTOP has been developed to serve as an aid in the analysis and sizing of stiffened composite panels that may be loaded in the postbuckling regime. A comprehensive set of analysis routines has been coupled to a widely used optimization program to produce this sizing code. POSTOP is intended for the preliminary design of metal or composite panels with open-section stiffeners, subjected to multiple combined biaxial compression (or tension), shear and normal pressure load cases. Longitudinal compression, however, is assumed to be the dominant loading. Temperature, initial bow eccentricity and load eccentricity effects are included. The panel geometry is assumed to be repetitive over several bays in the longitudinal (stiffener) direction as well as in the transverse direction. Analytical routines are included to compute panel stiffnesses, strains, local and panel buckling loads, and skin/stiffener interface stresses. The resulting program is applicable to stiffened panels as commonly used in fuselage, wing, or empennage structures. This report gives a general description of the capabilities and limitations of the code. Detailed instructions required to use the program are presented. Several example problems are included. An understanding of the analytical and sizing procedures described in NASA CR-172259 will aid in the effective use of the code.

17. Key Words (Suggested by Author(s))	18. Distribution Statement
Postbuckling, Stiffened Panels, Composites, Sizing Code, Users Manual	Unclassified - Unlimited Subject Category 39

19. Security Classif. (of this report)	20. Security Classif. (of this page)	21. No. of Pages	22. Price
Unclassified	Unclassified	98	A05

For sale by the National Technical Information Service, Springfield, Virginia 22161